
20007
2309PCS
16+
Alien Frontier
Bounty Hub
Scan the QR code
for a PDF instruction
扫码关注公众号
获取电子版说明书

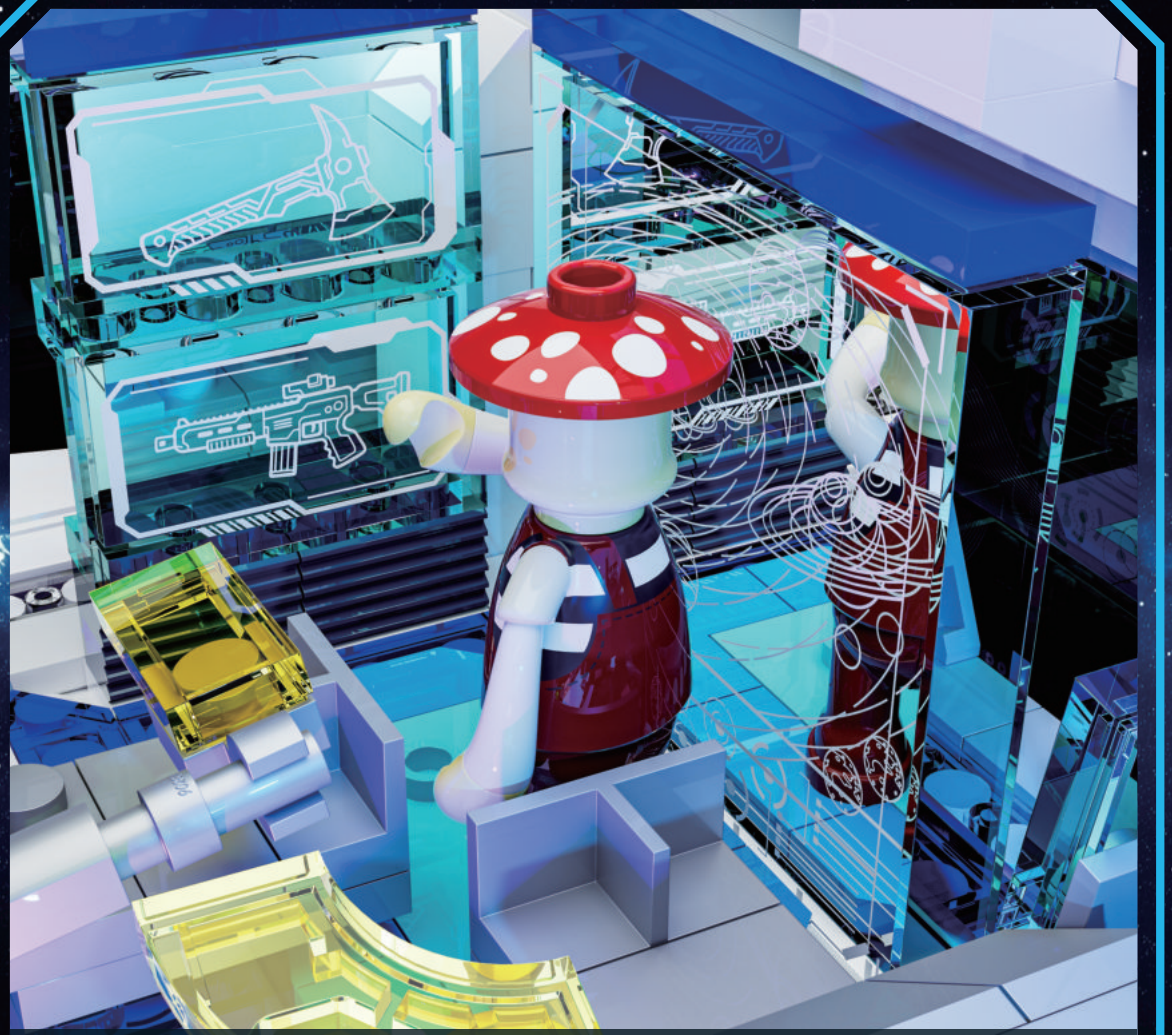

The bounty center's top target, often found on the outer rim, skilled at hiding and specializing in illegal trade and weapon smuggling.

悬赏中心头号重赏目标，常出没在星际边缘，擅长迅速隐藏行踪，专门进行非法交易和走私武器。

Mushroom Man Criminal (蘑菇人罪犯)

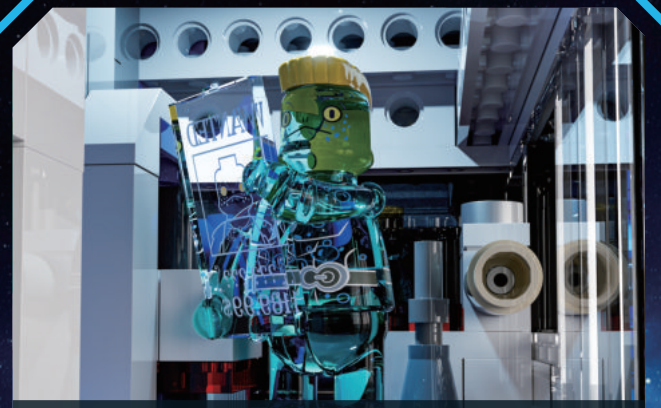

Appears as a bounty hunter, but is a chameleon criminal, skilled in disguise and using it for criminal activities.

表面上是赏金猎人，实际上是变色龙罪犯，擅长乔装伪装，用精湛的伪装技艺从事犯罪活动。

Chameleon (变色龙人)

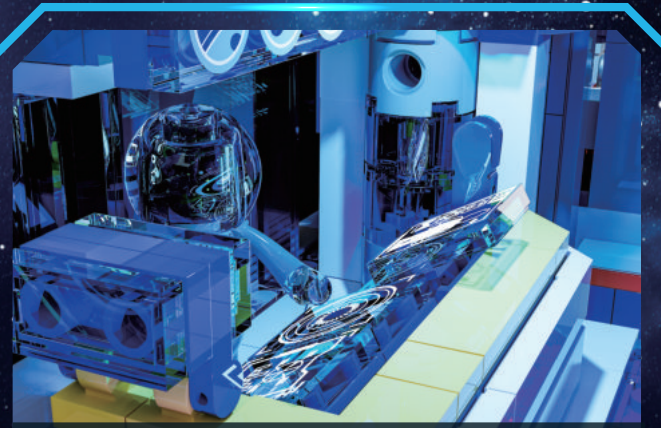

A legendary bounty hunter, skilled in interstellar tracking, with a flawless record on countless space battlefields and mission stations.

赏金猎人中的传奇人物，擅长星际追踪，曾在无数太空战场和任务站执行过完美的任务，从未失手。

Nebula Hunter (星云族赏金猎人)

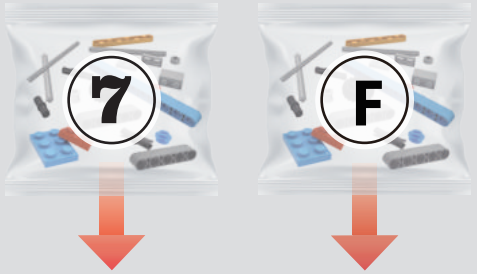
7
F

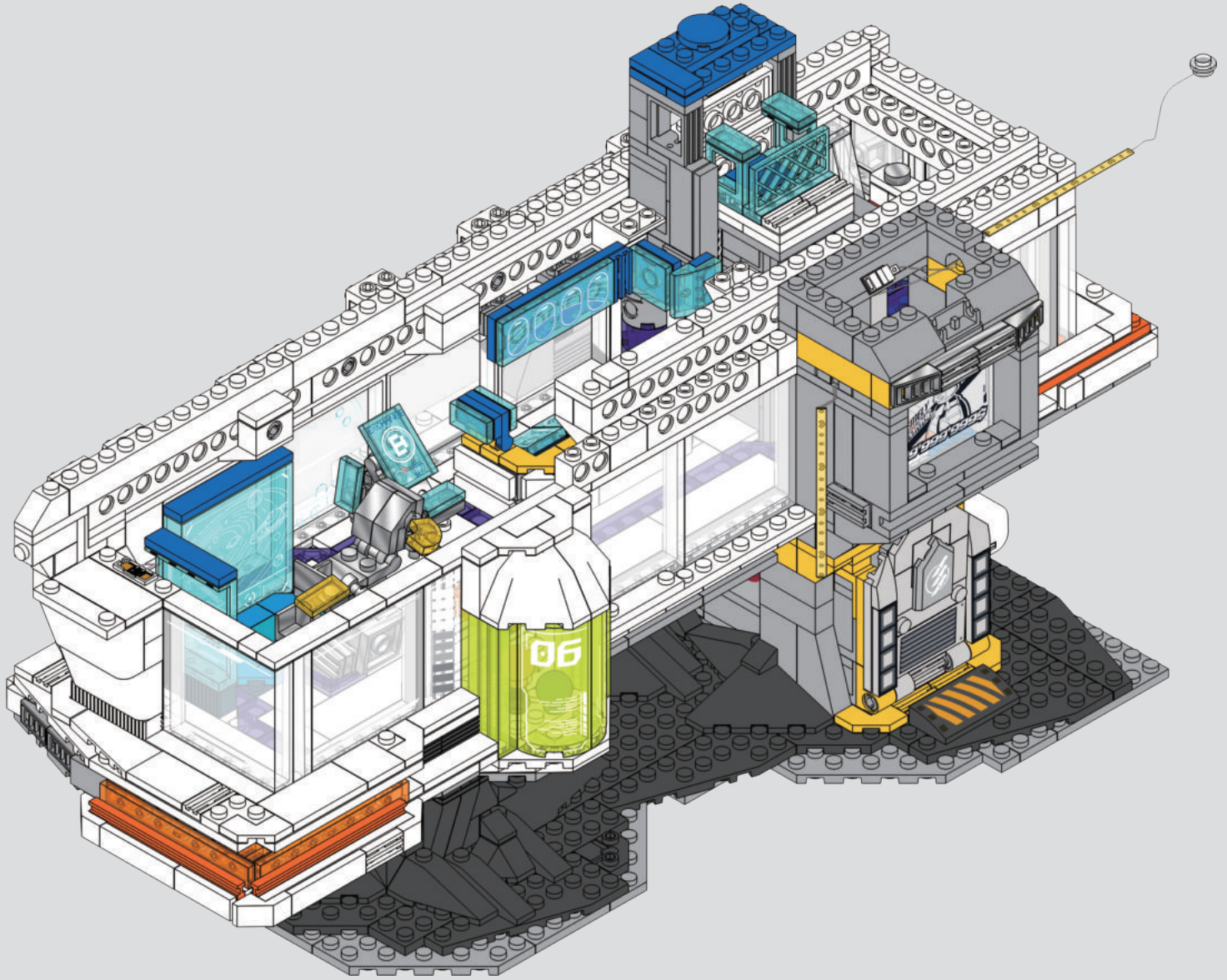
06

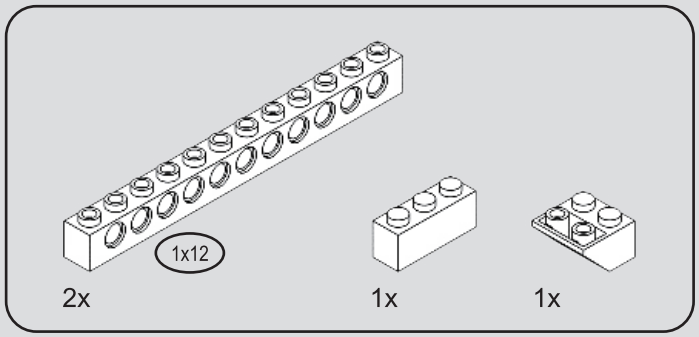

1

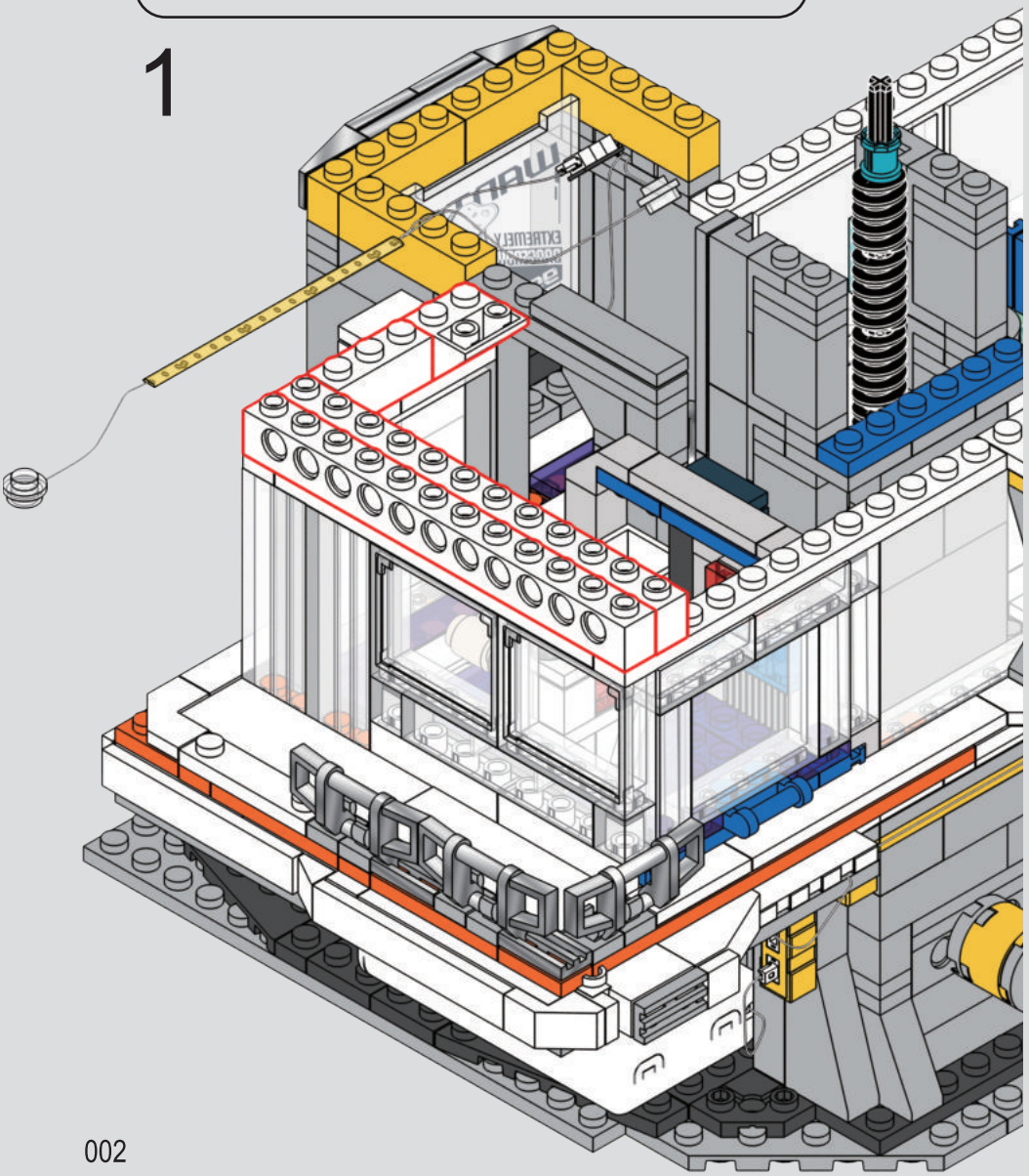

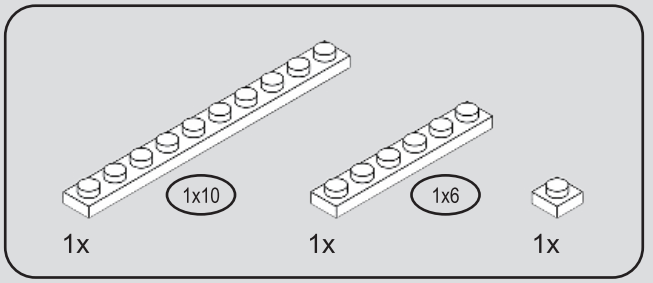

2

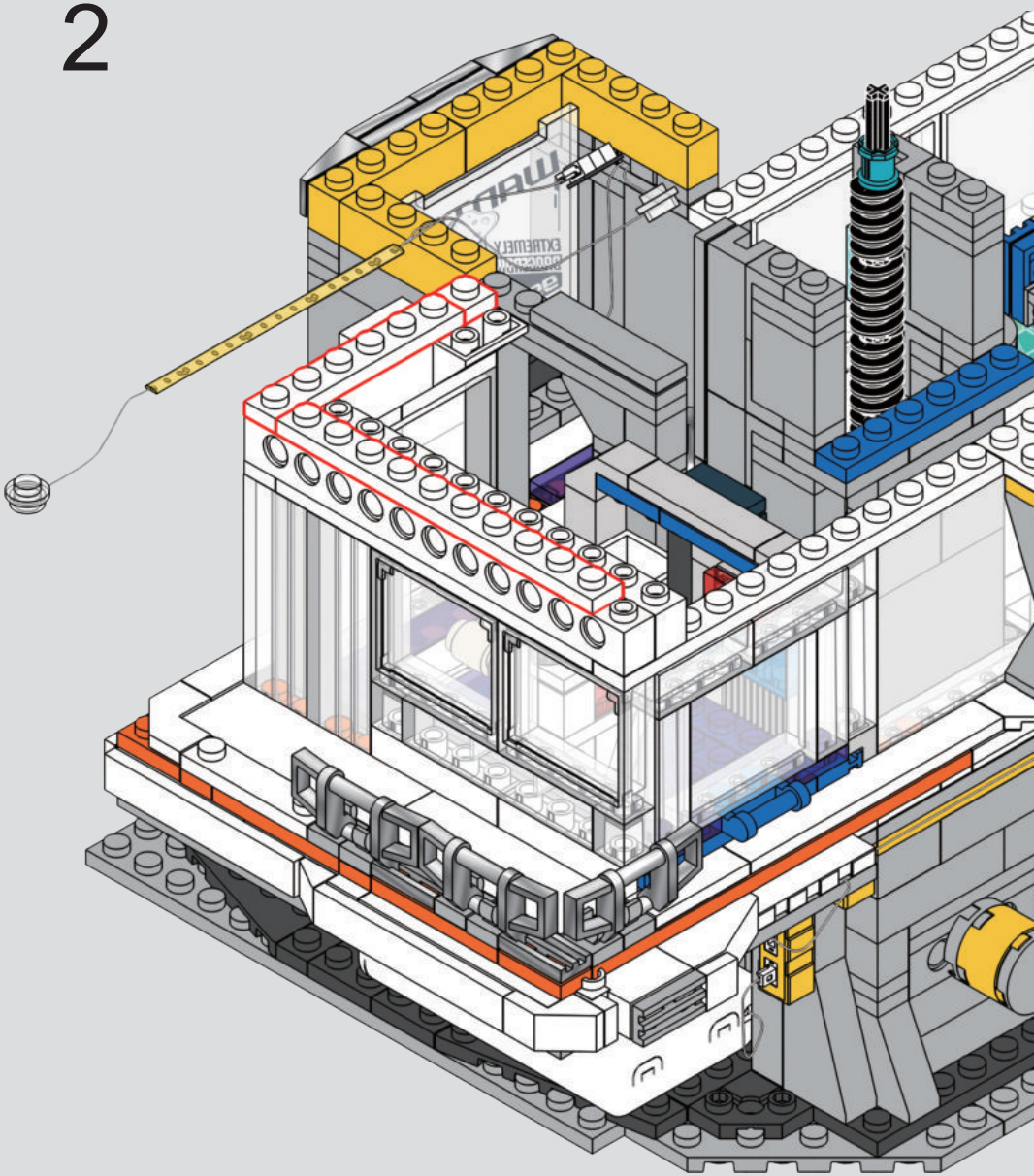

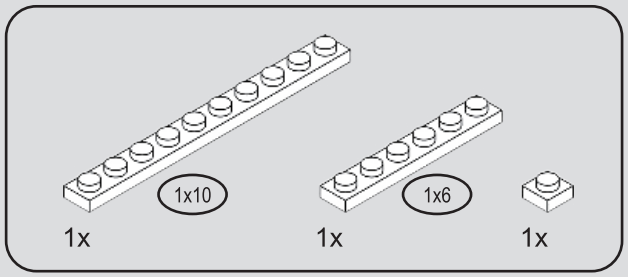

3

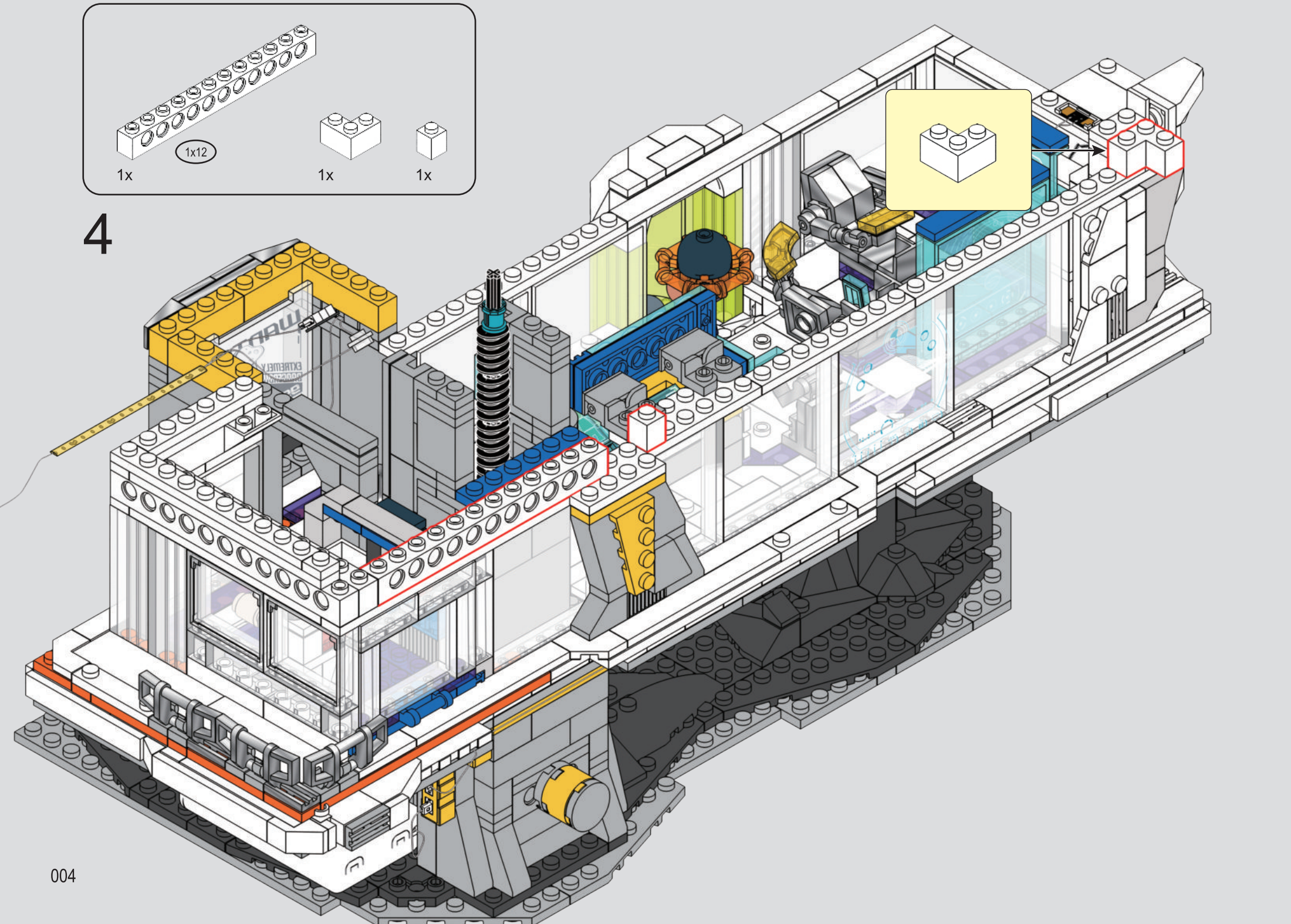

4

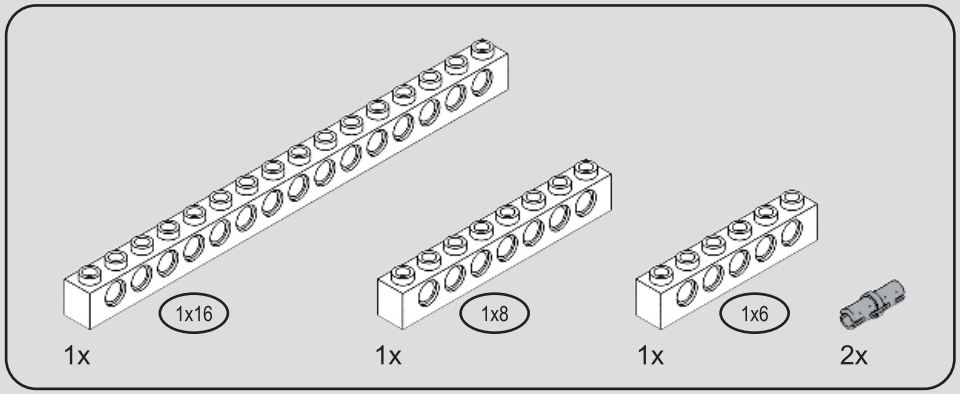

5

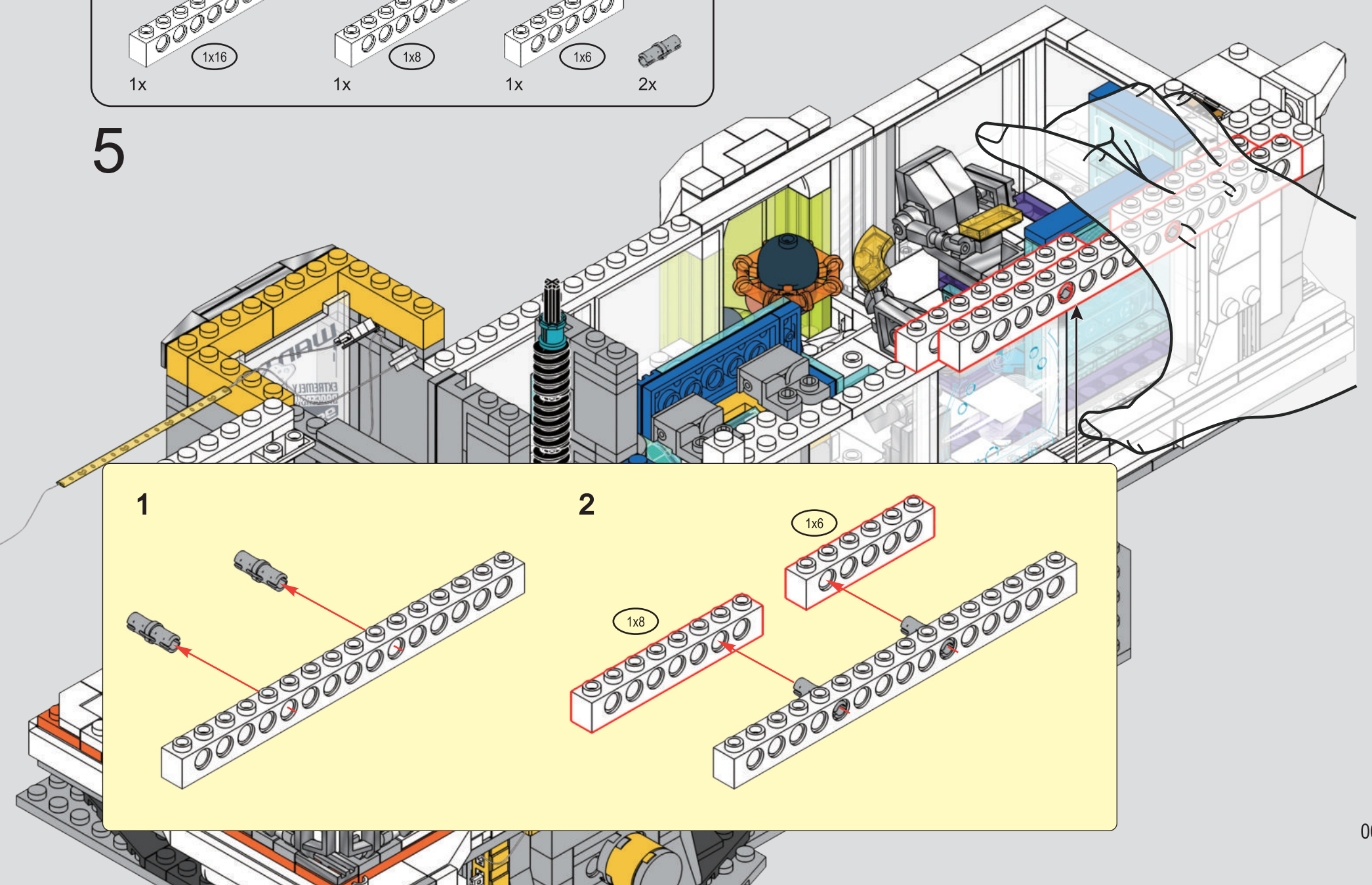

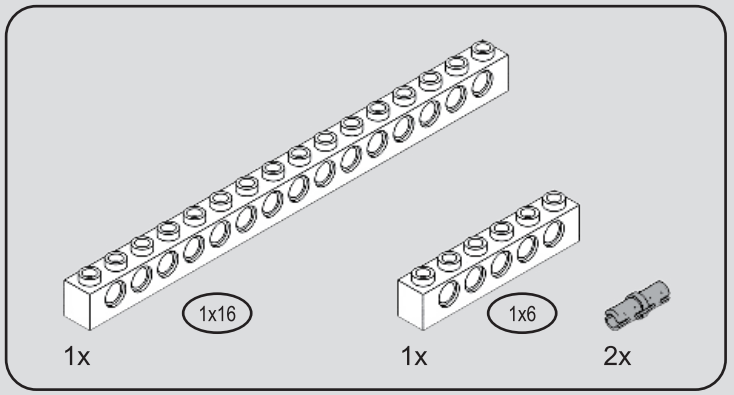

6

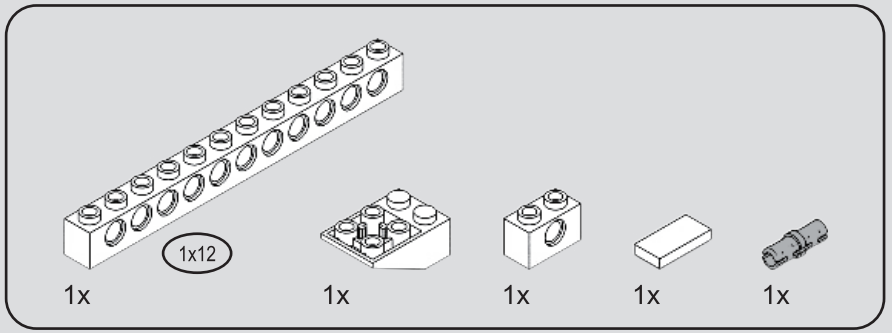

7

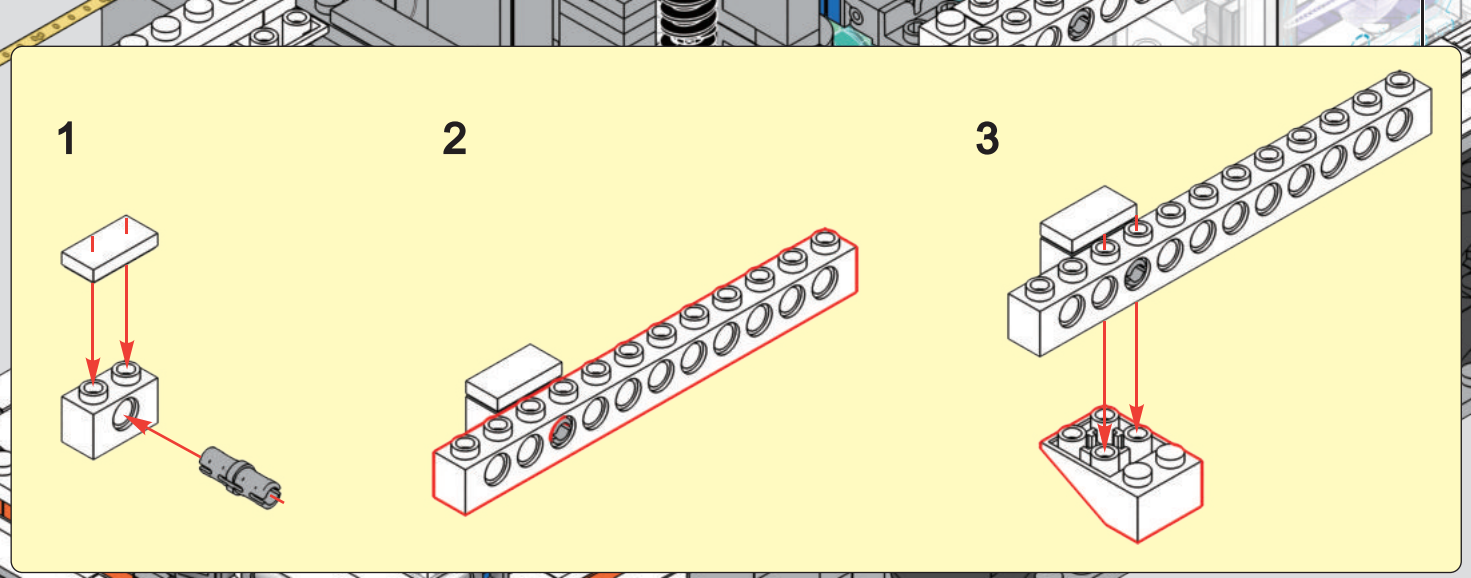

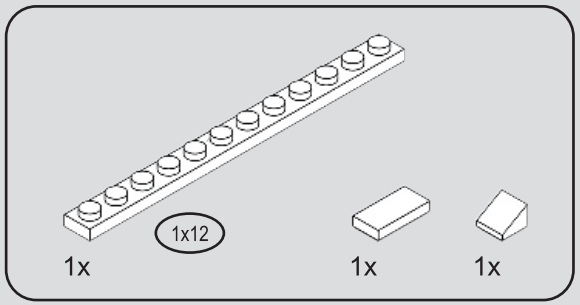

8

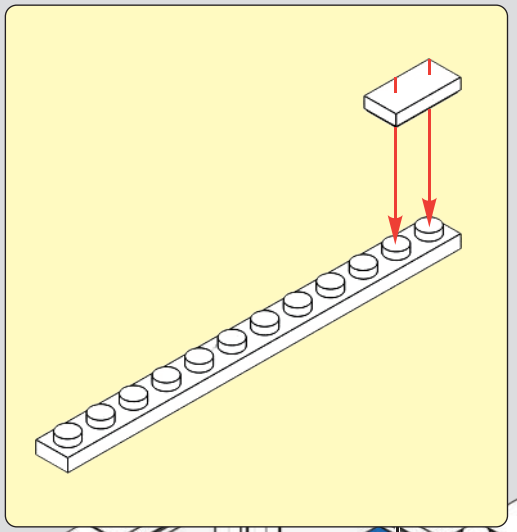



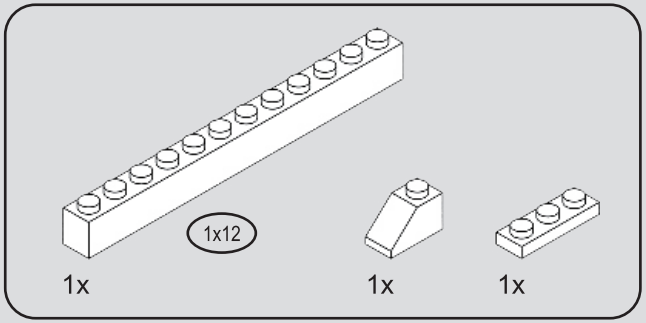

9

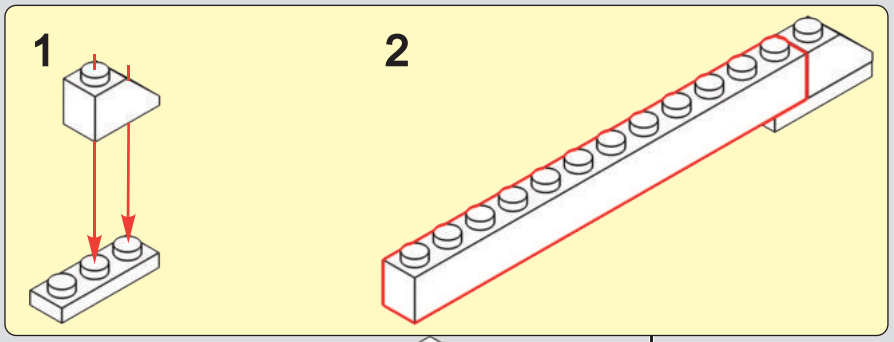

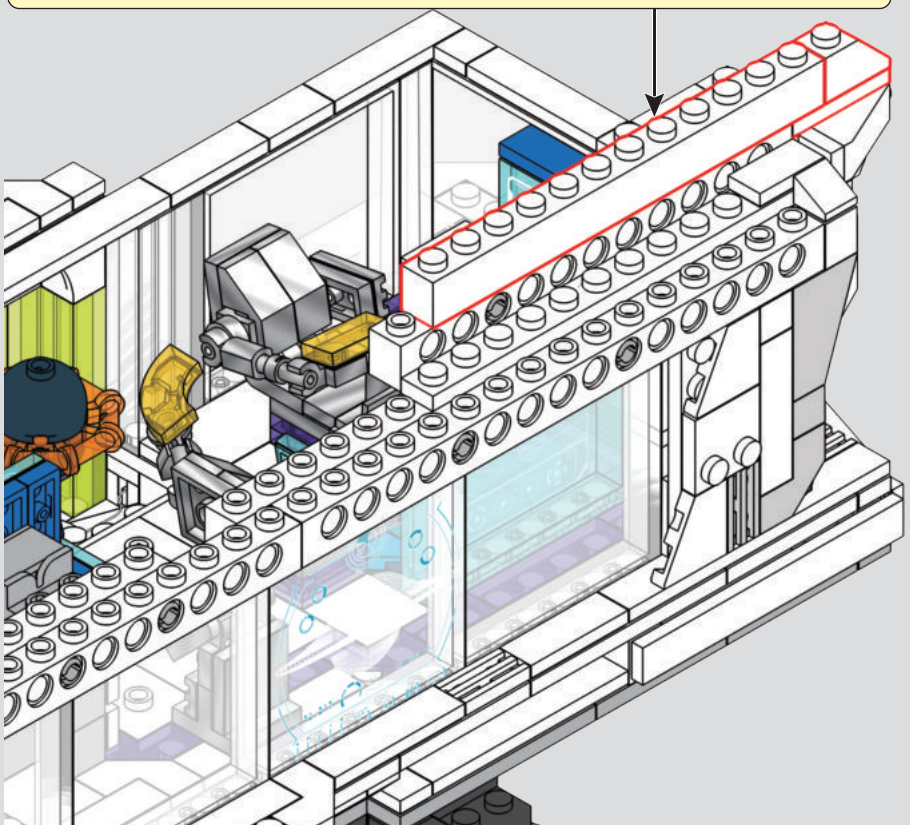

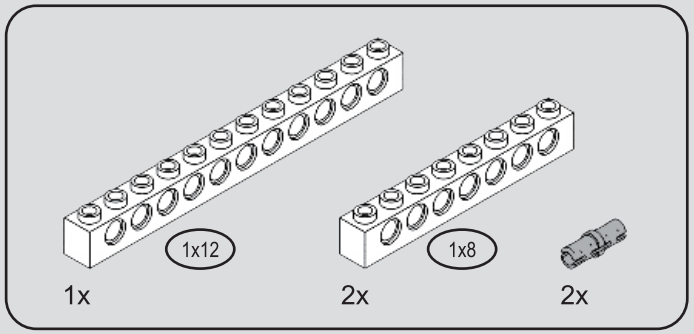

10

1

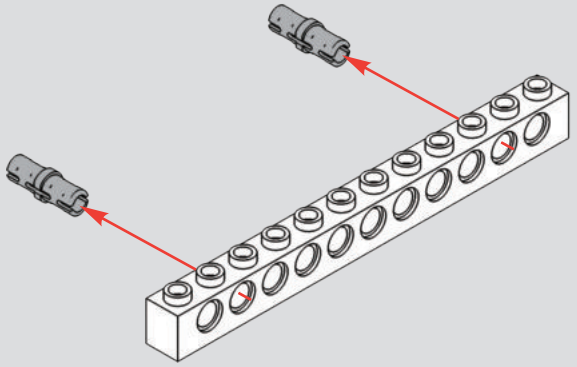

2

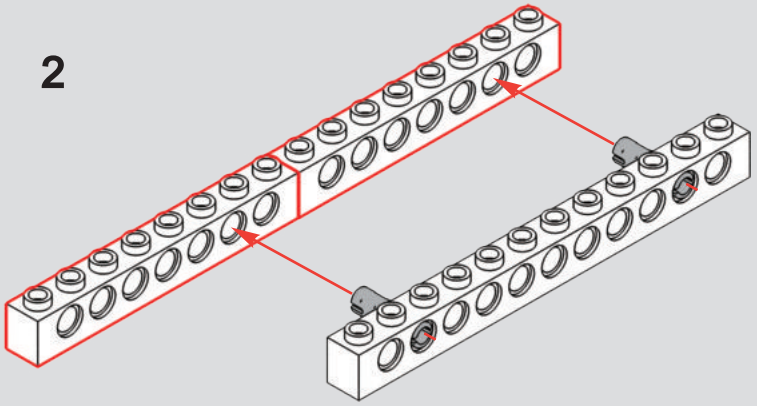

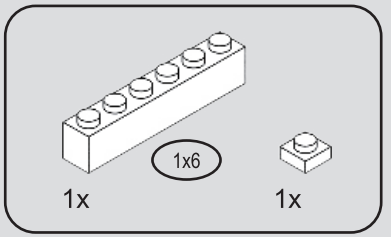

11

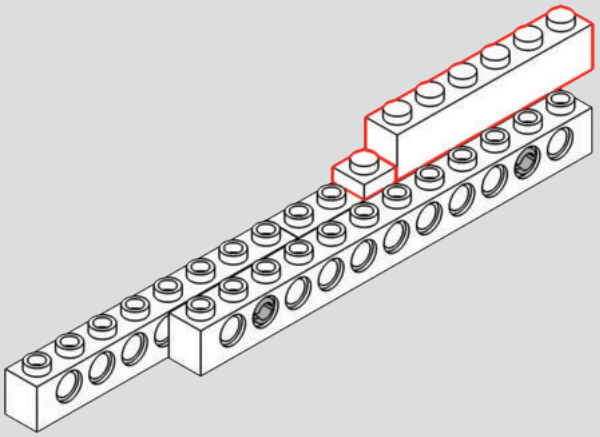

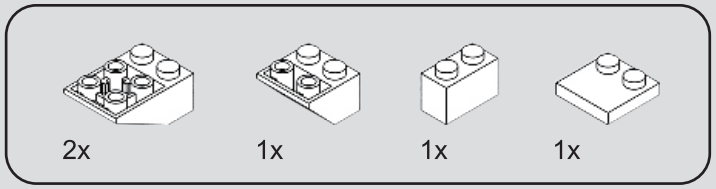

12

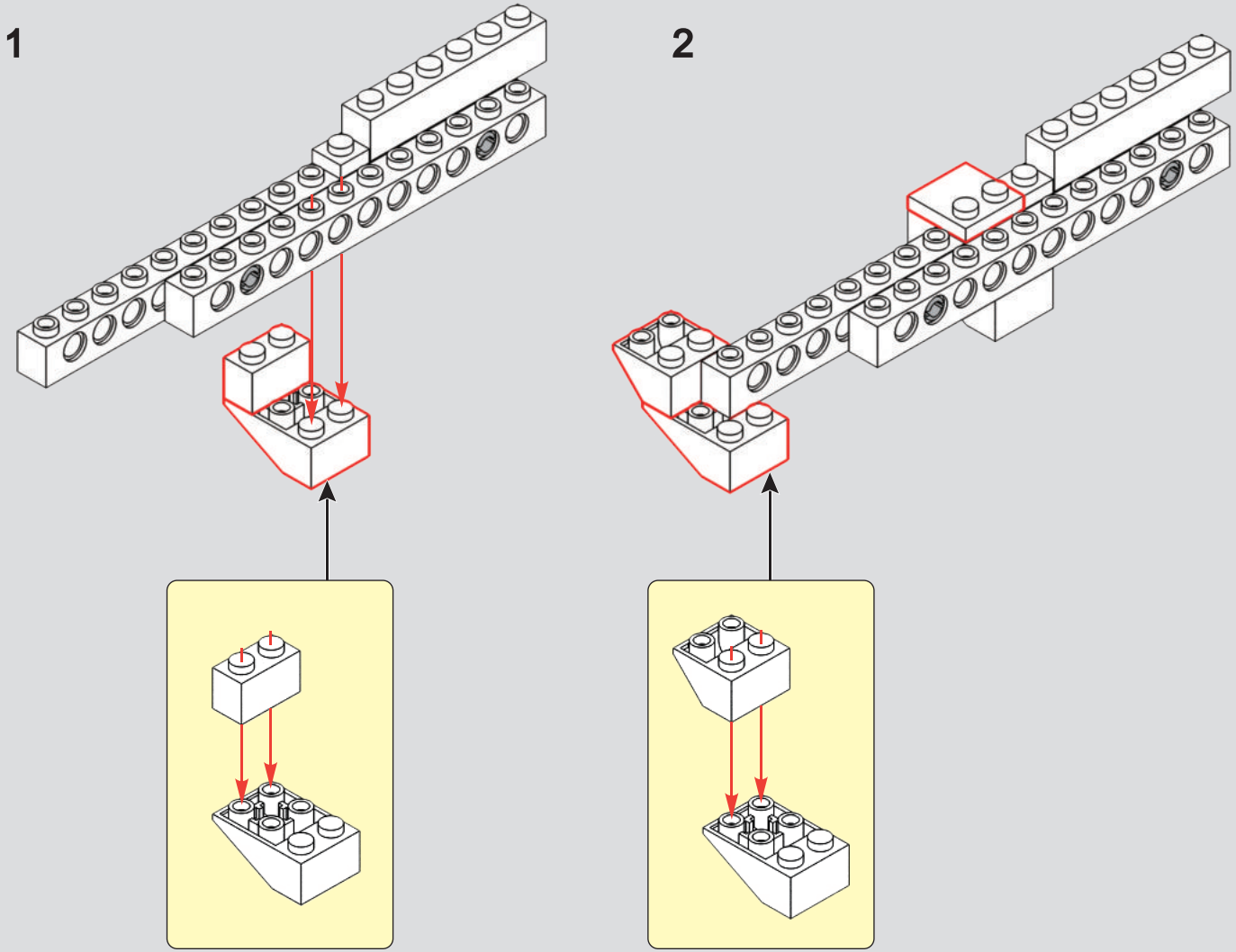

13

1

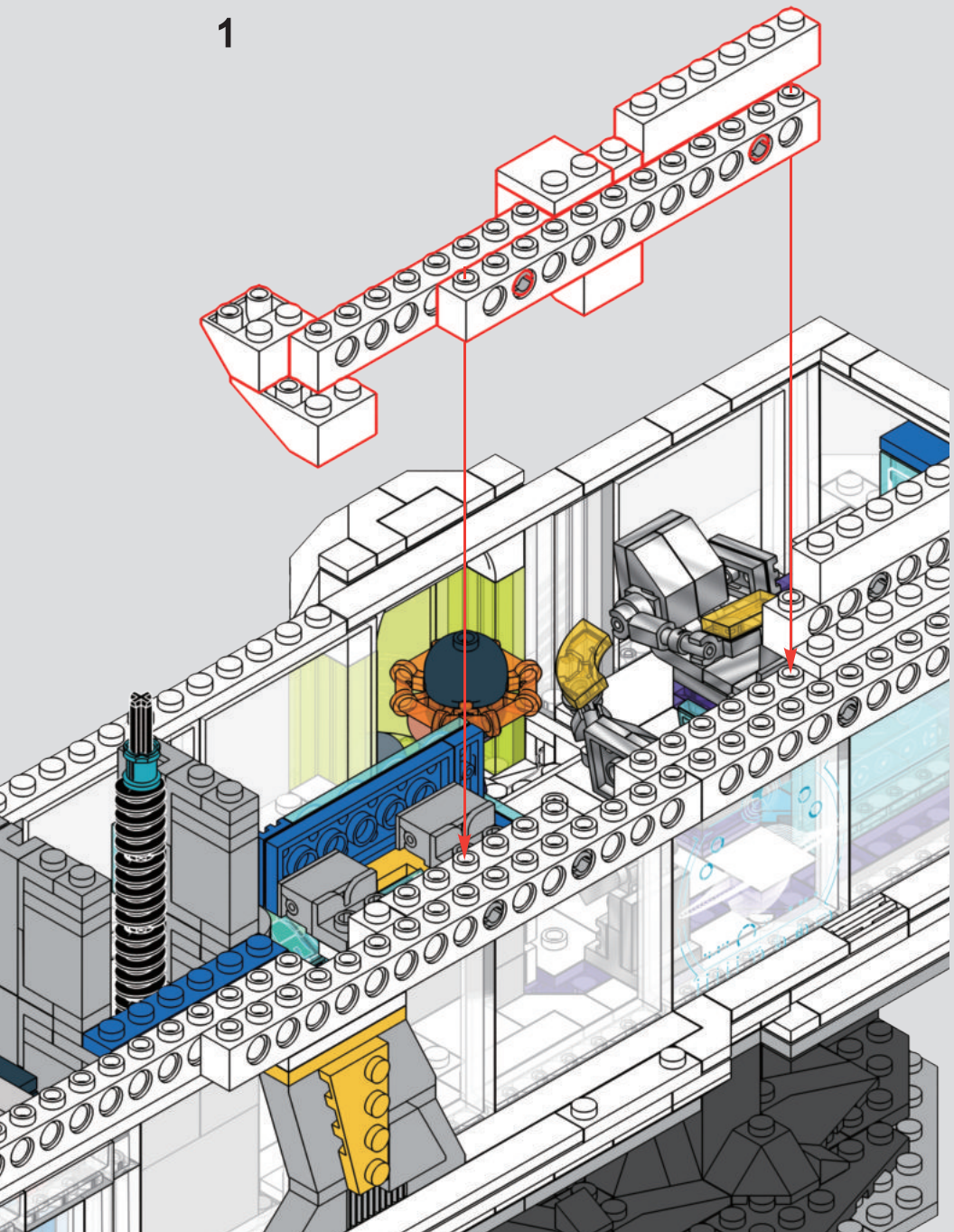

2

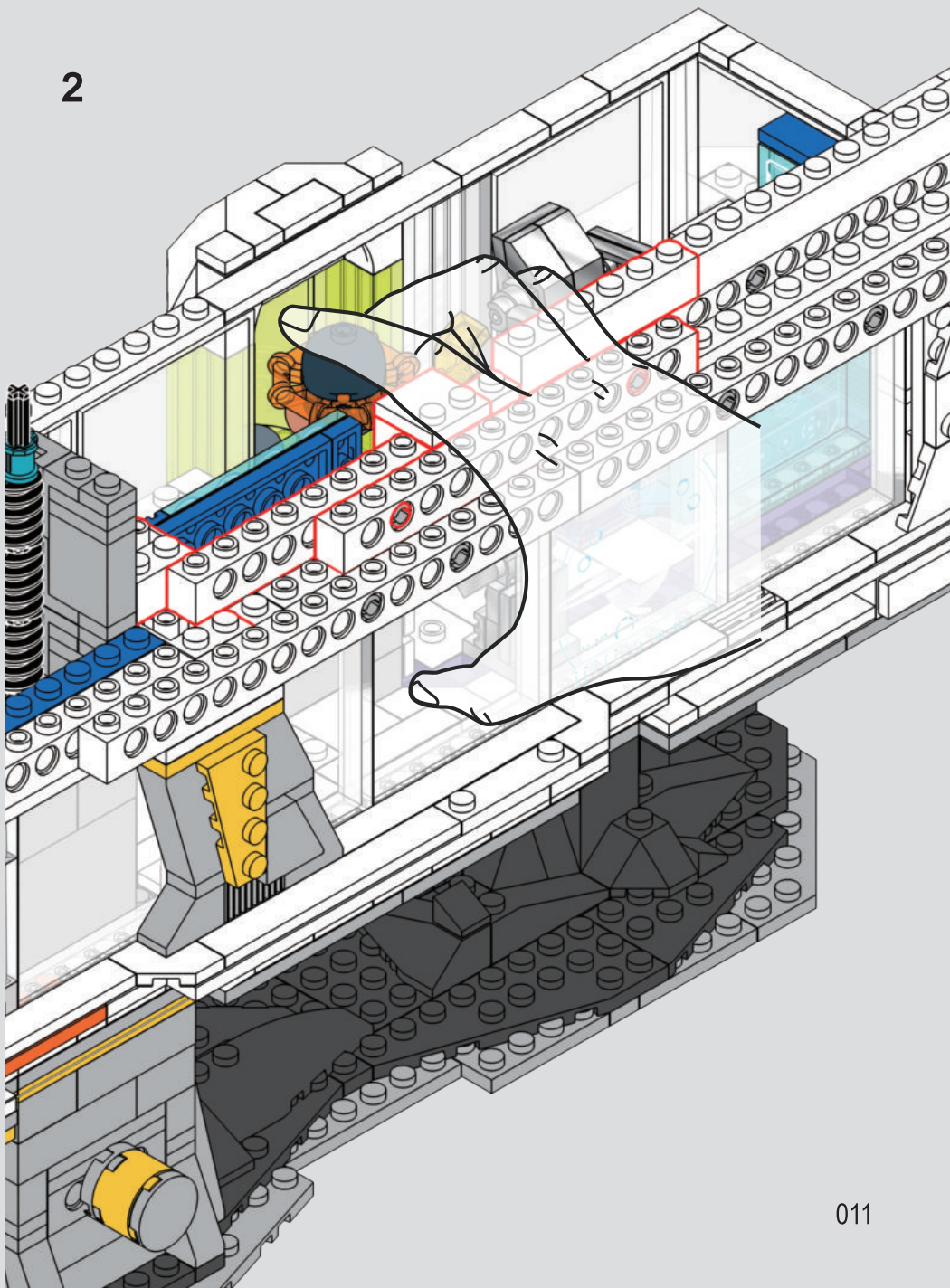

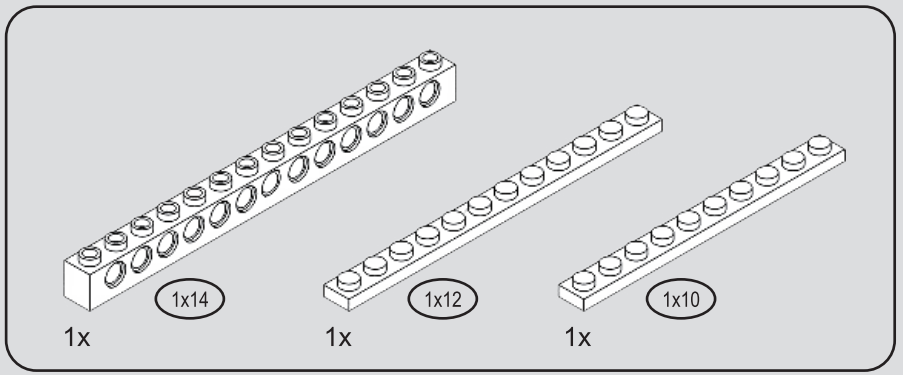

14

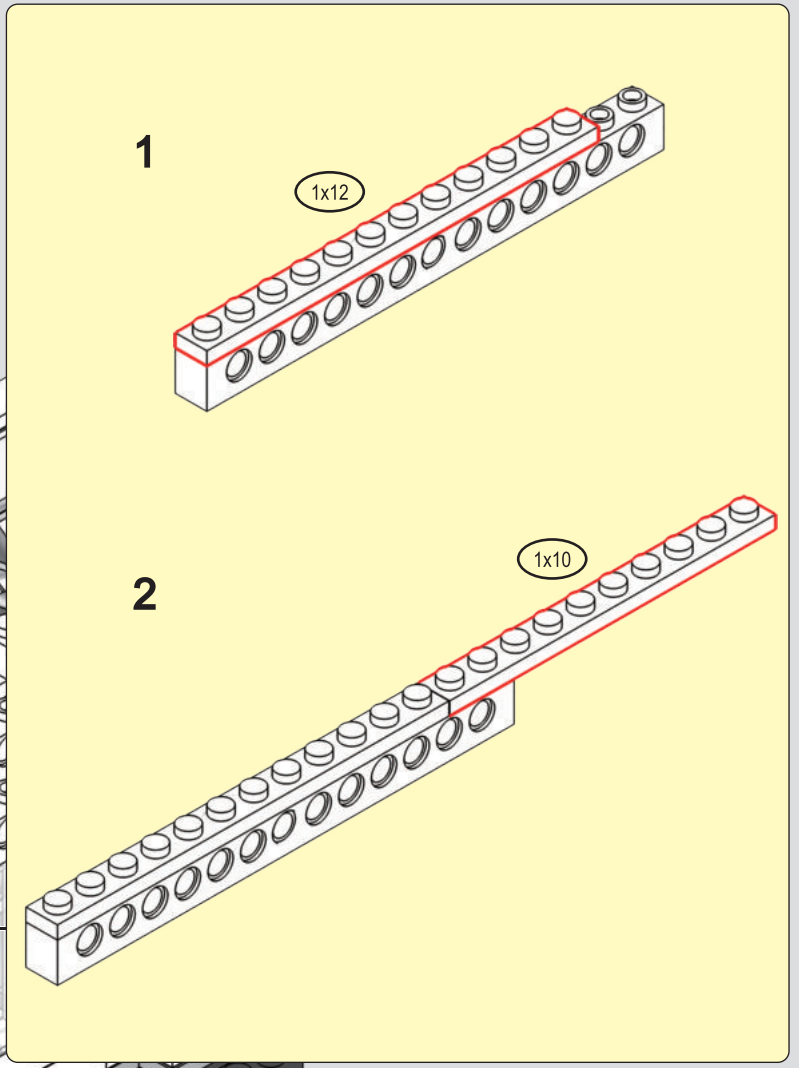

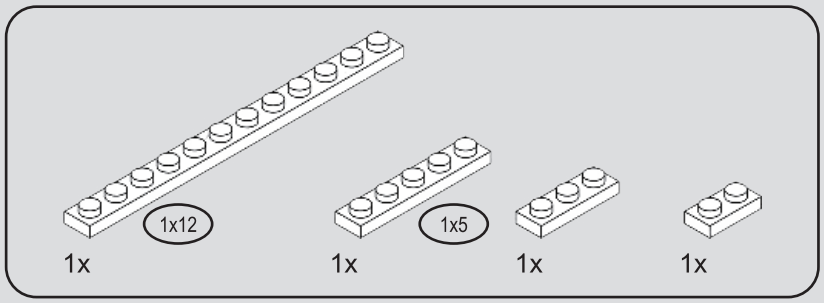

15

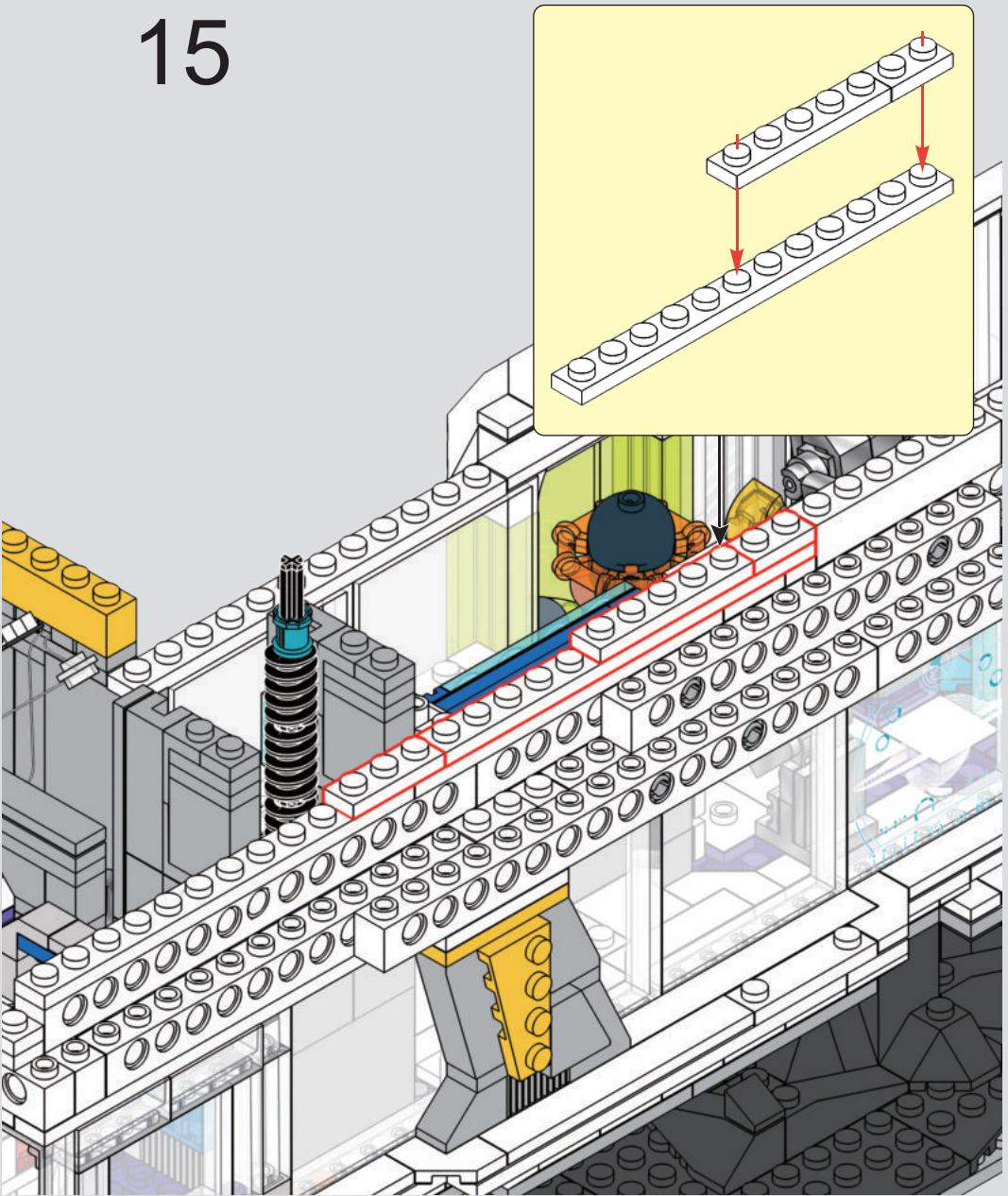

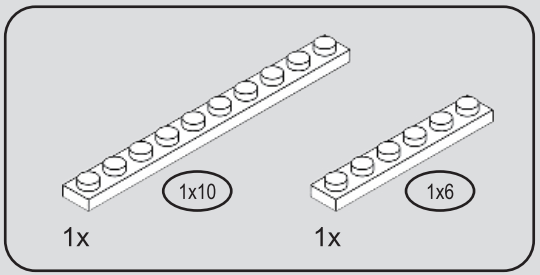

16

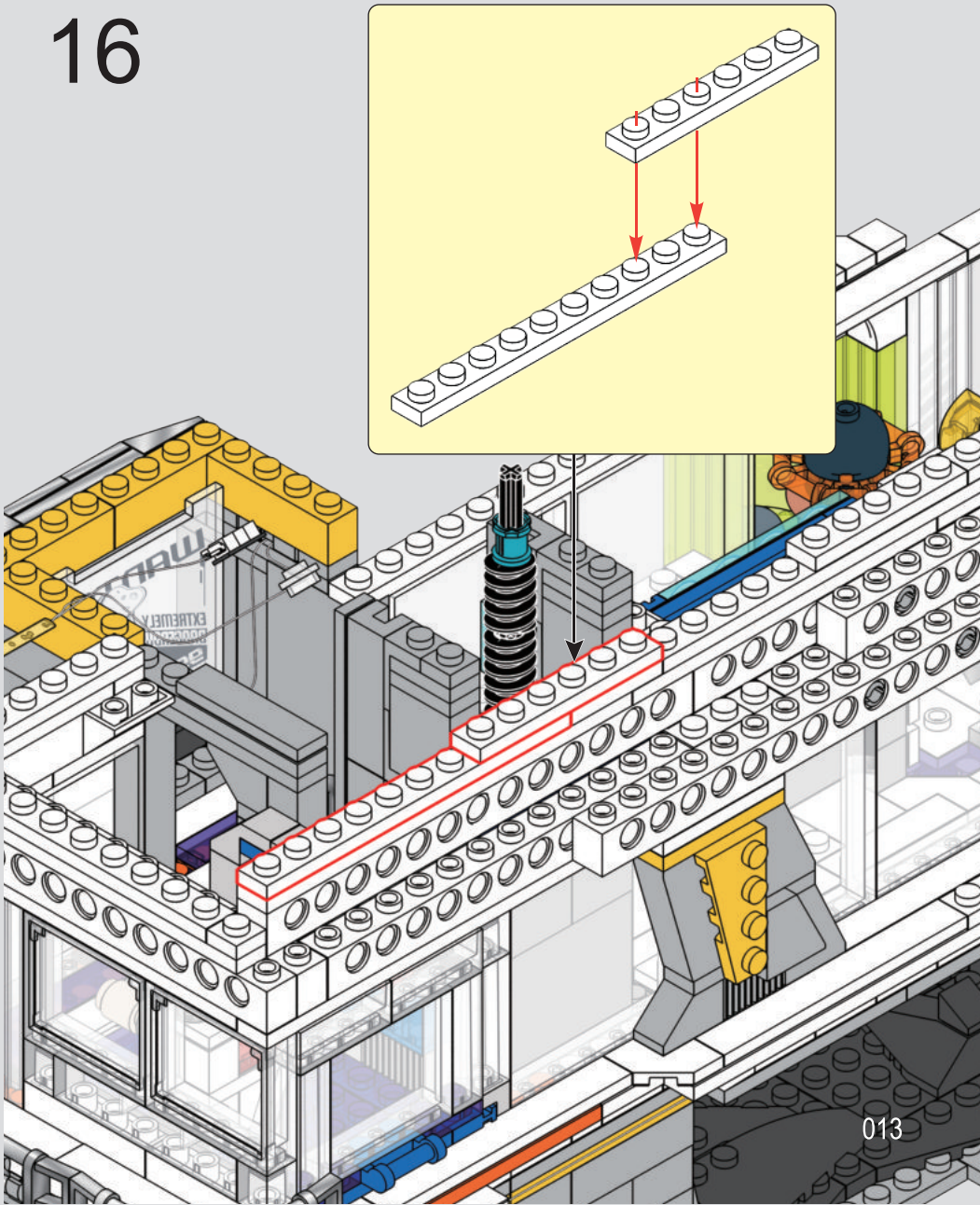

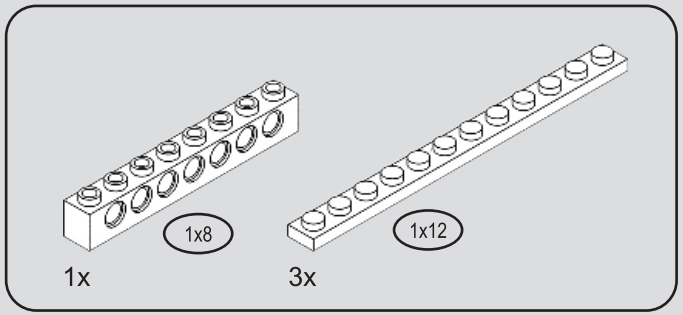

17

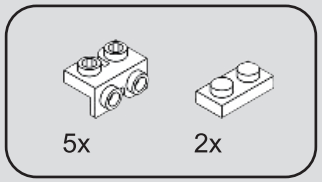

18

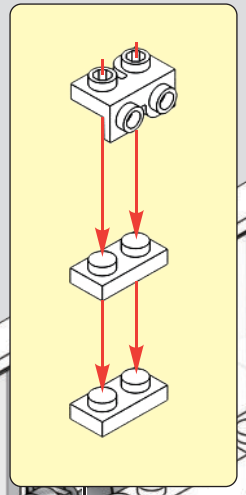

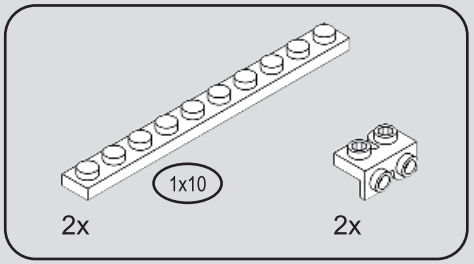

19

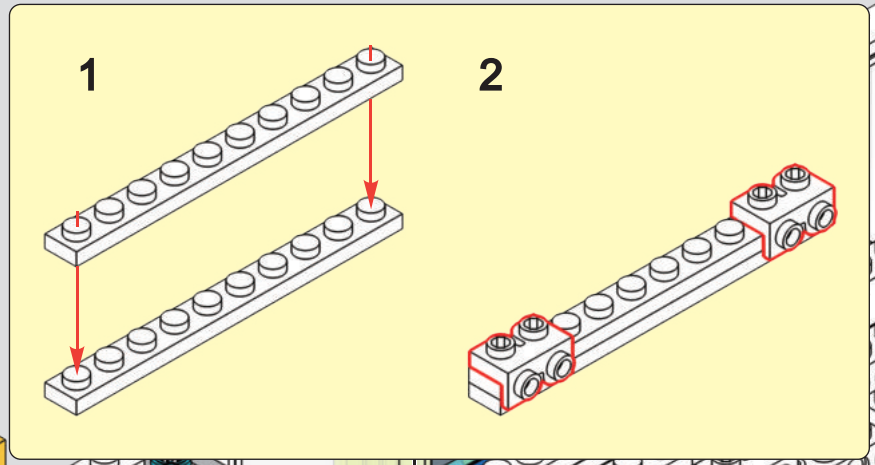

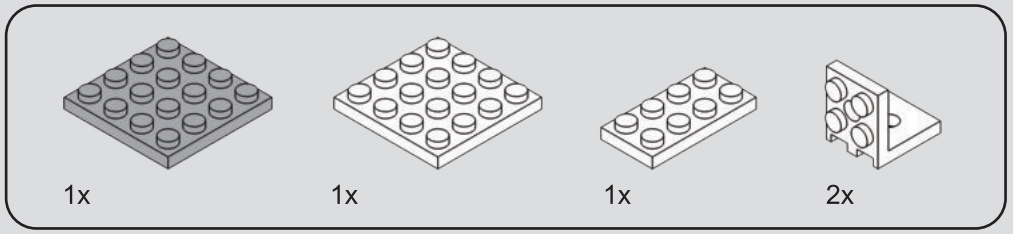

20

1

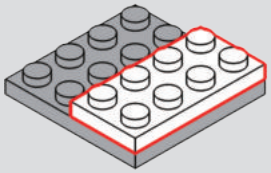

2

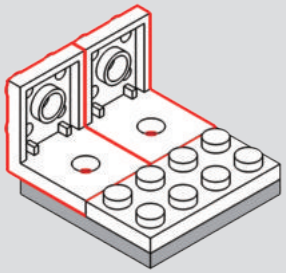

3

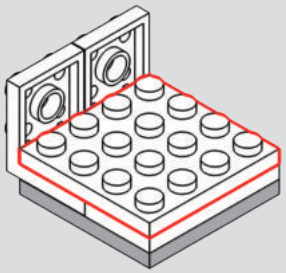

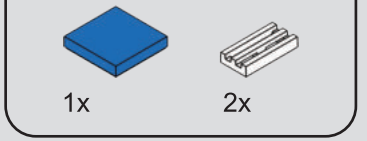

21

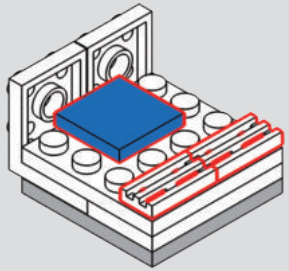

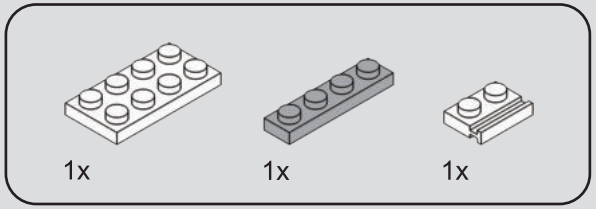

22

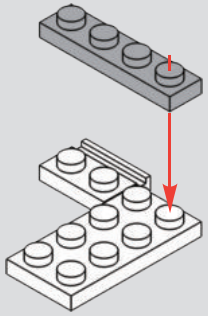

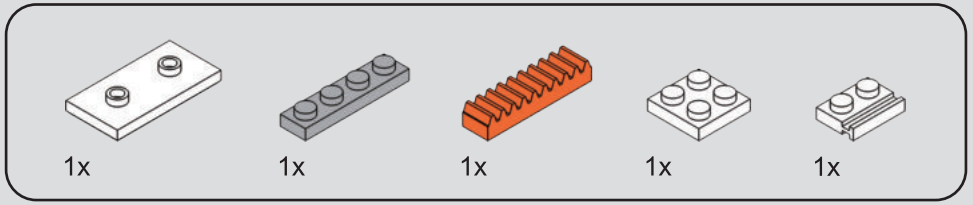

23

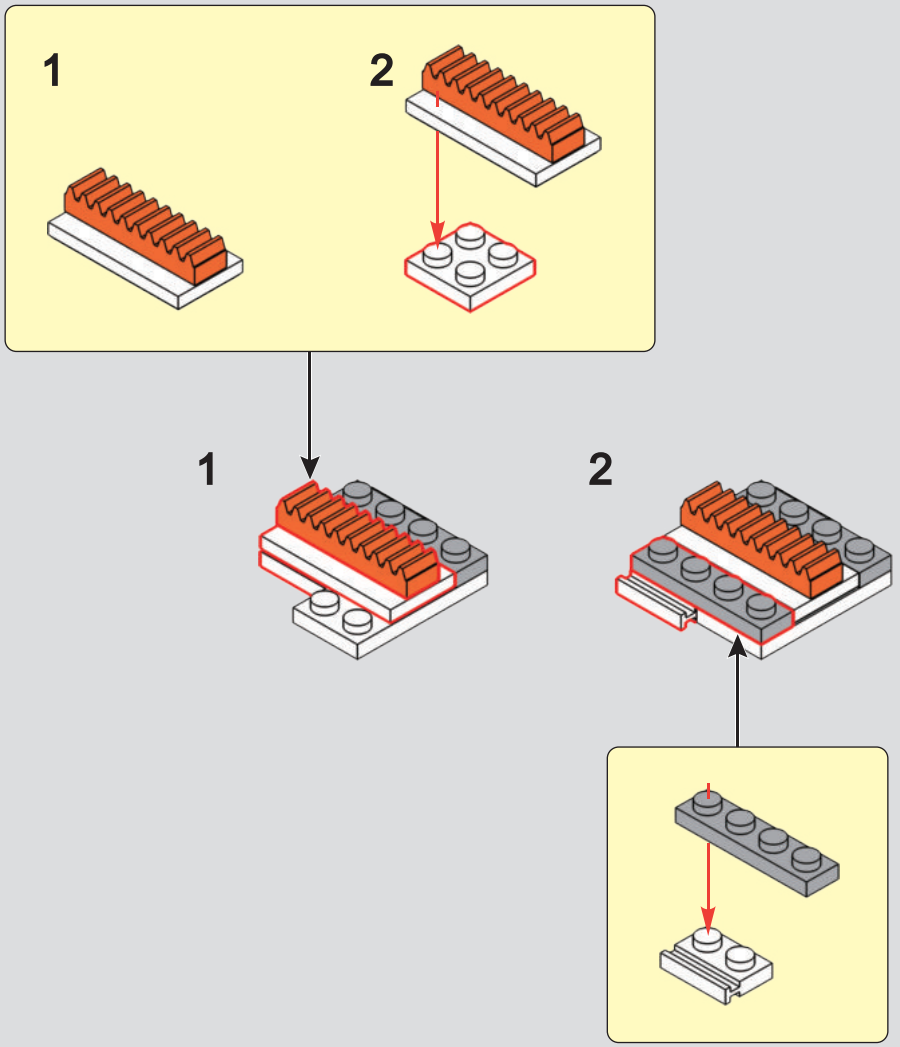

24

1

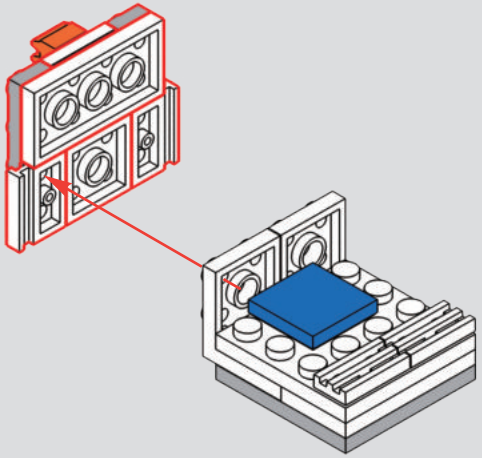

2

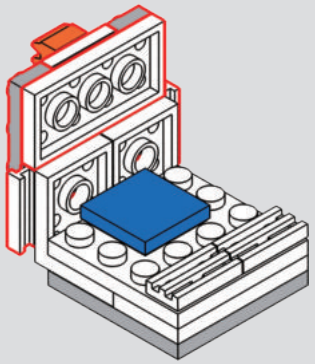

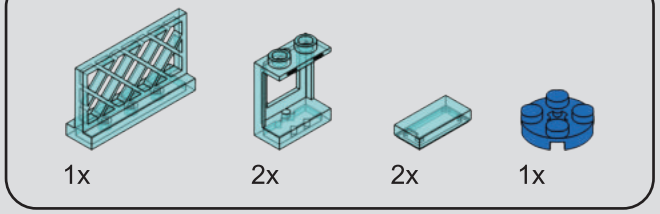

25

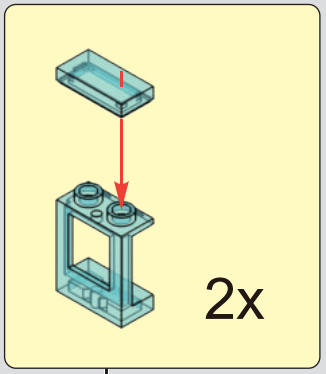

1

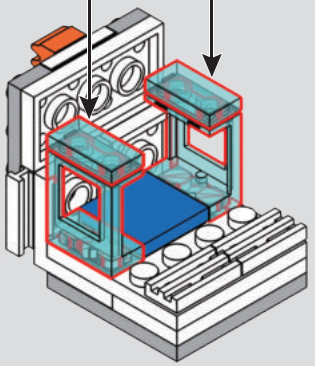

2

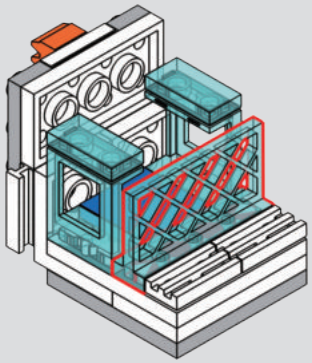

3

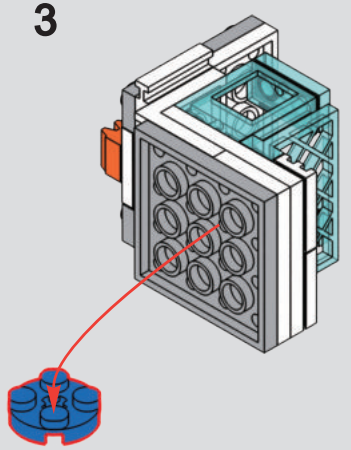

26

1

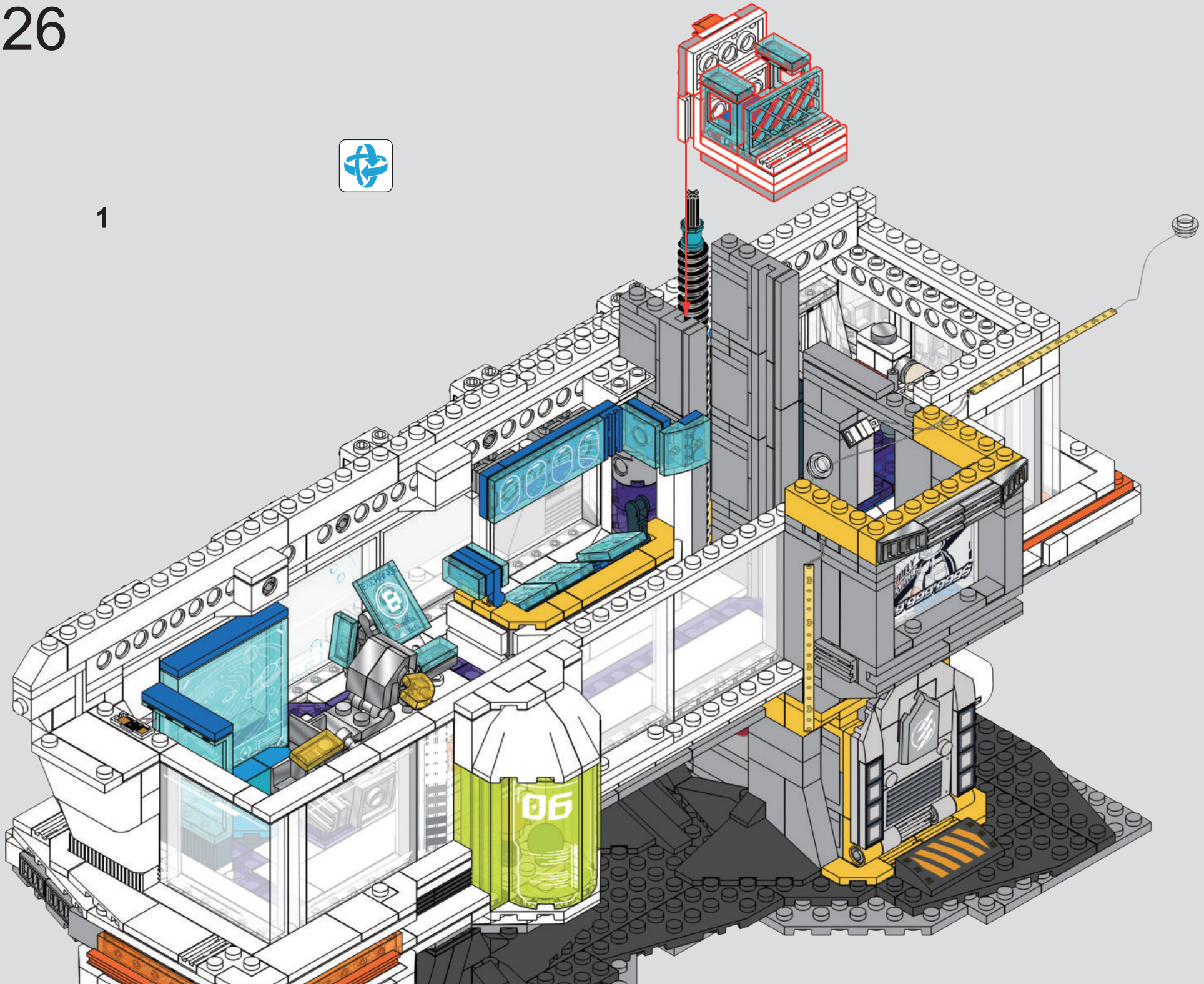

2

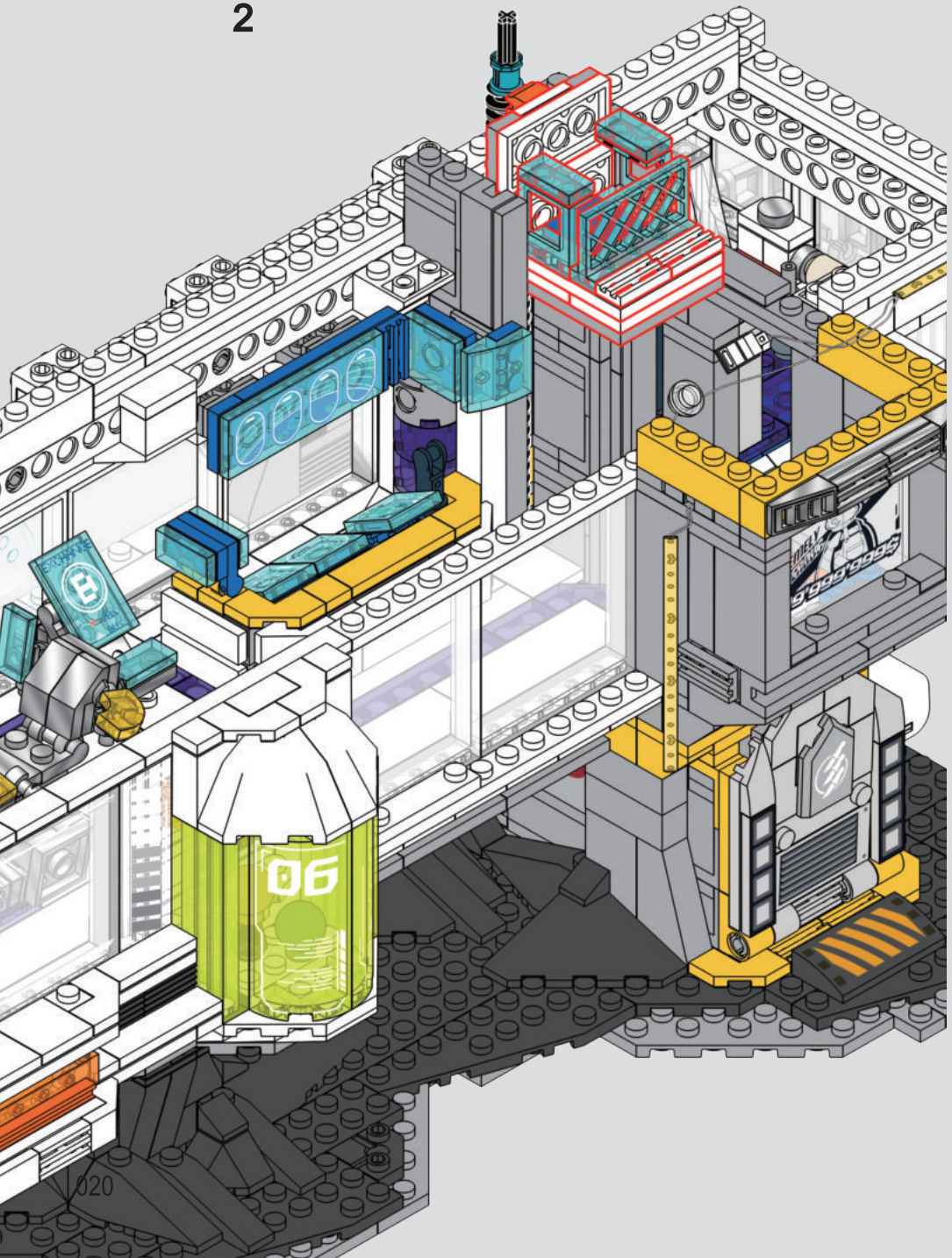

3

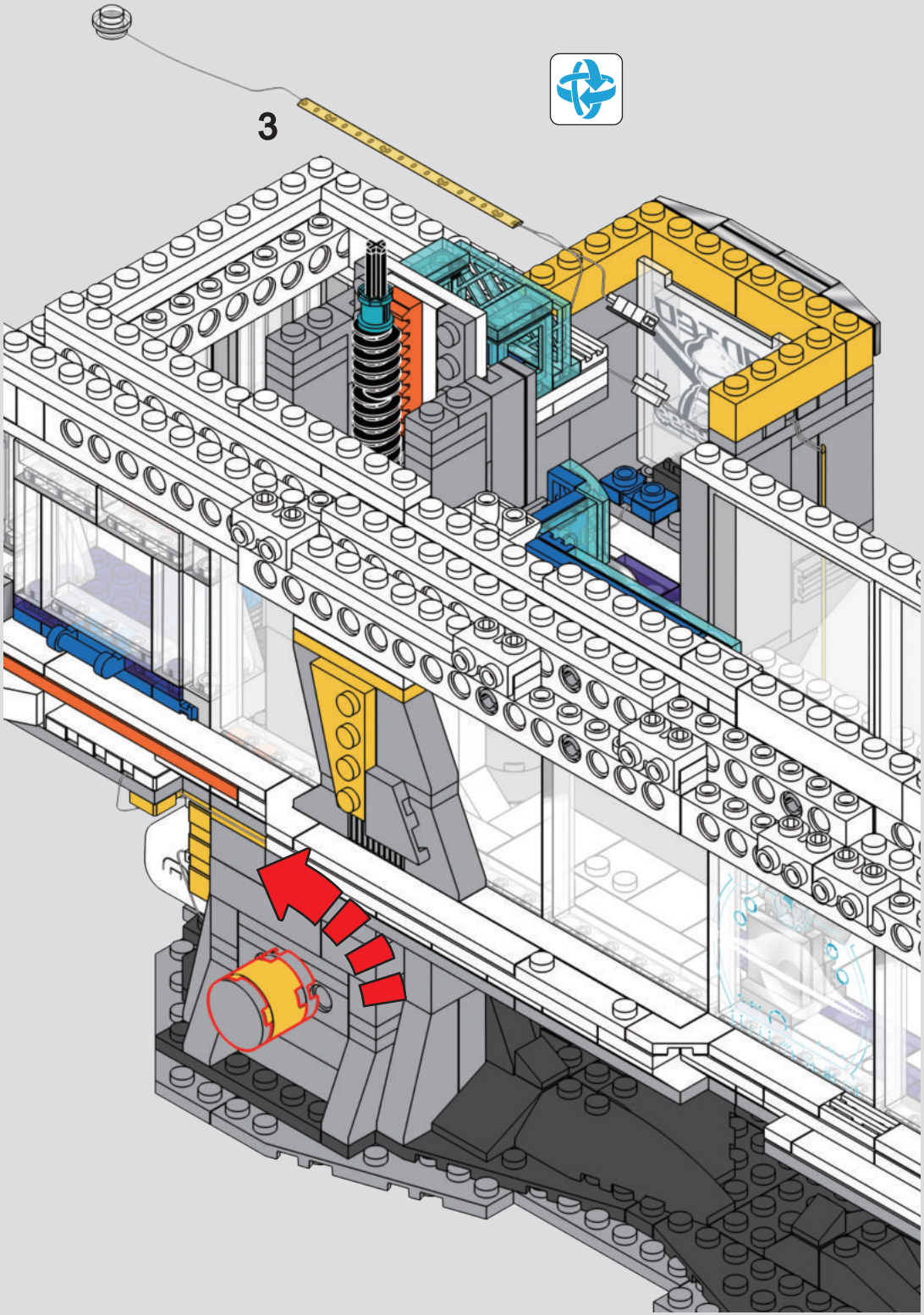

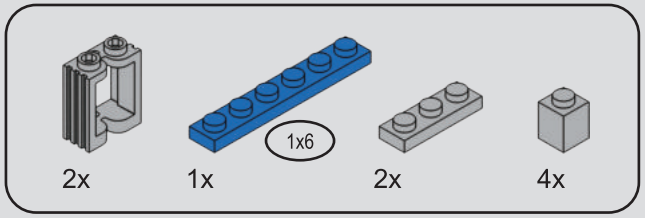

27

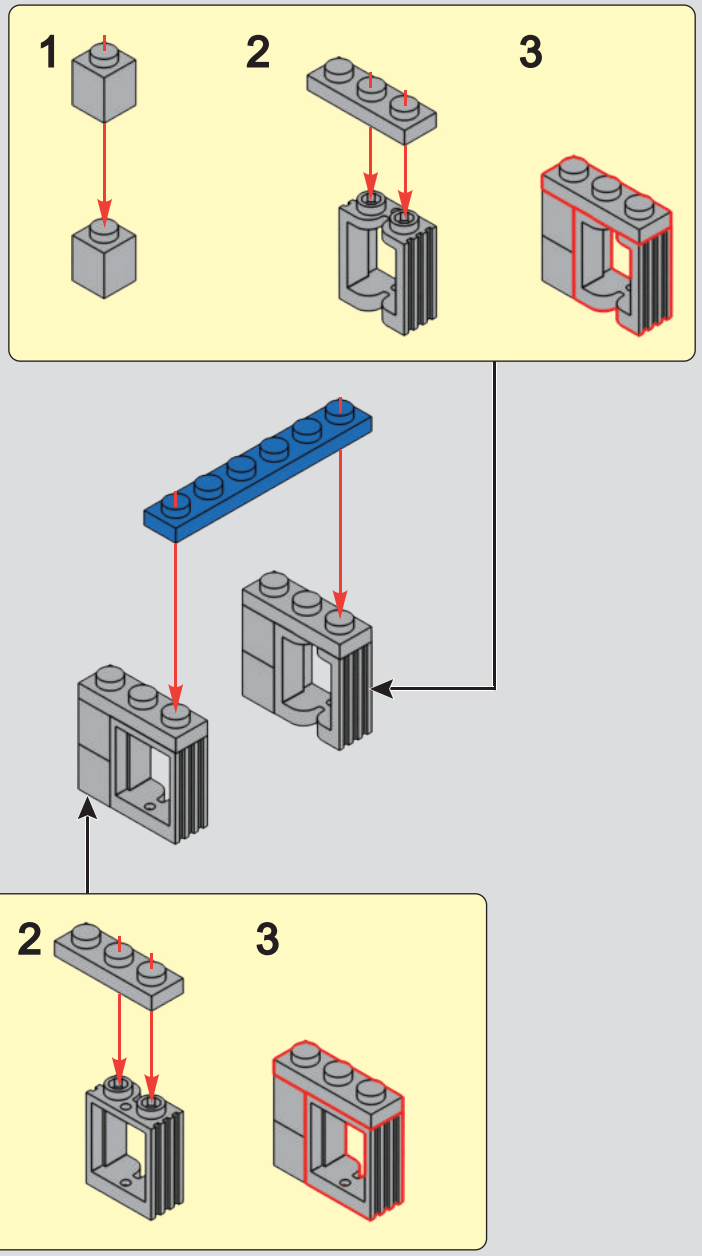

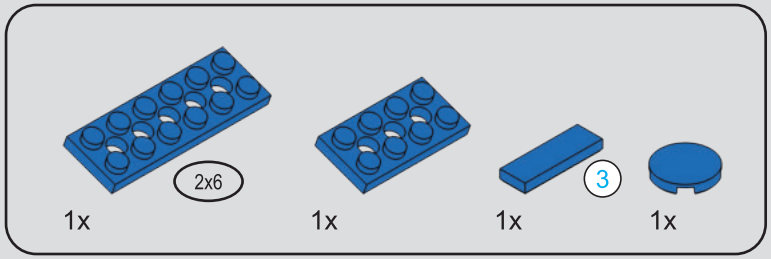

28

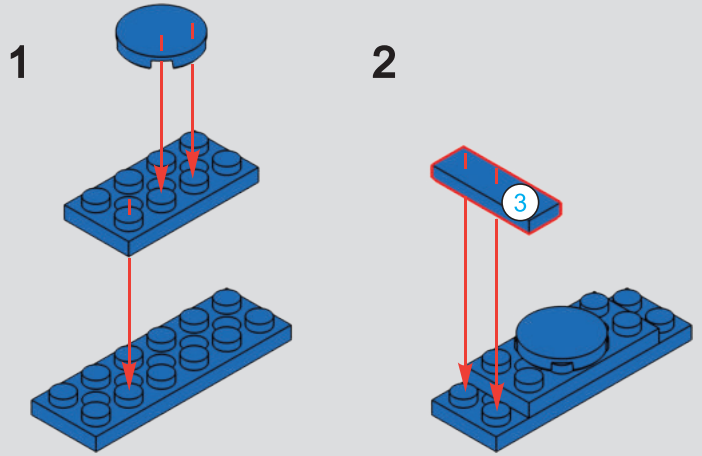

29

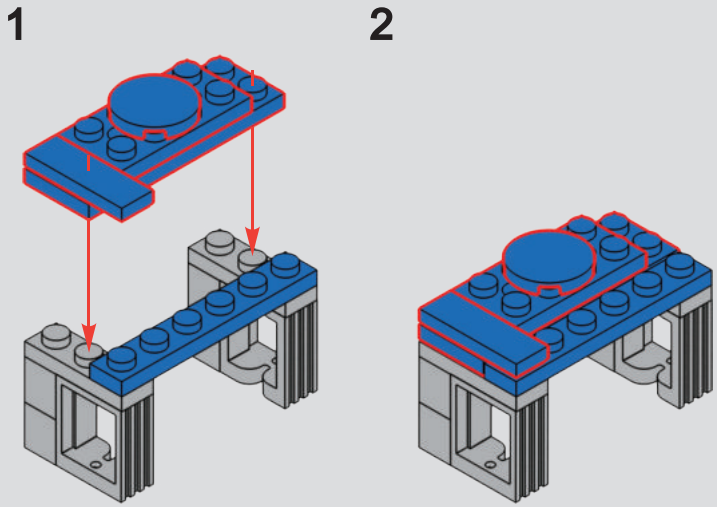

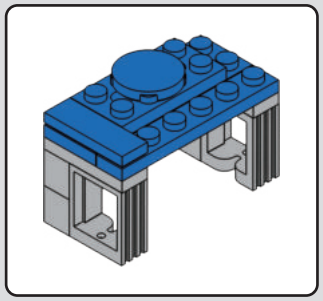

1x

1

30

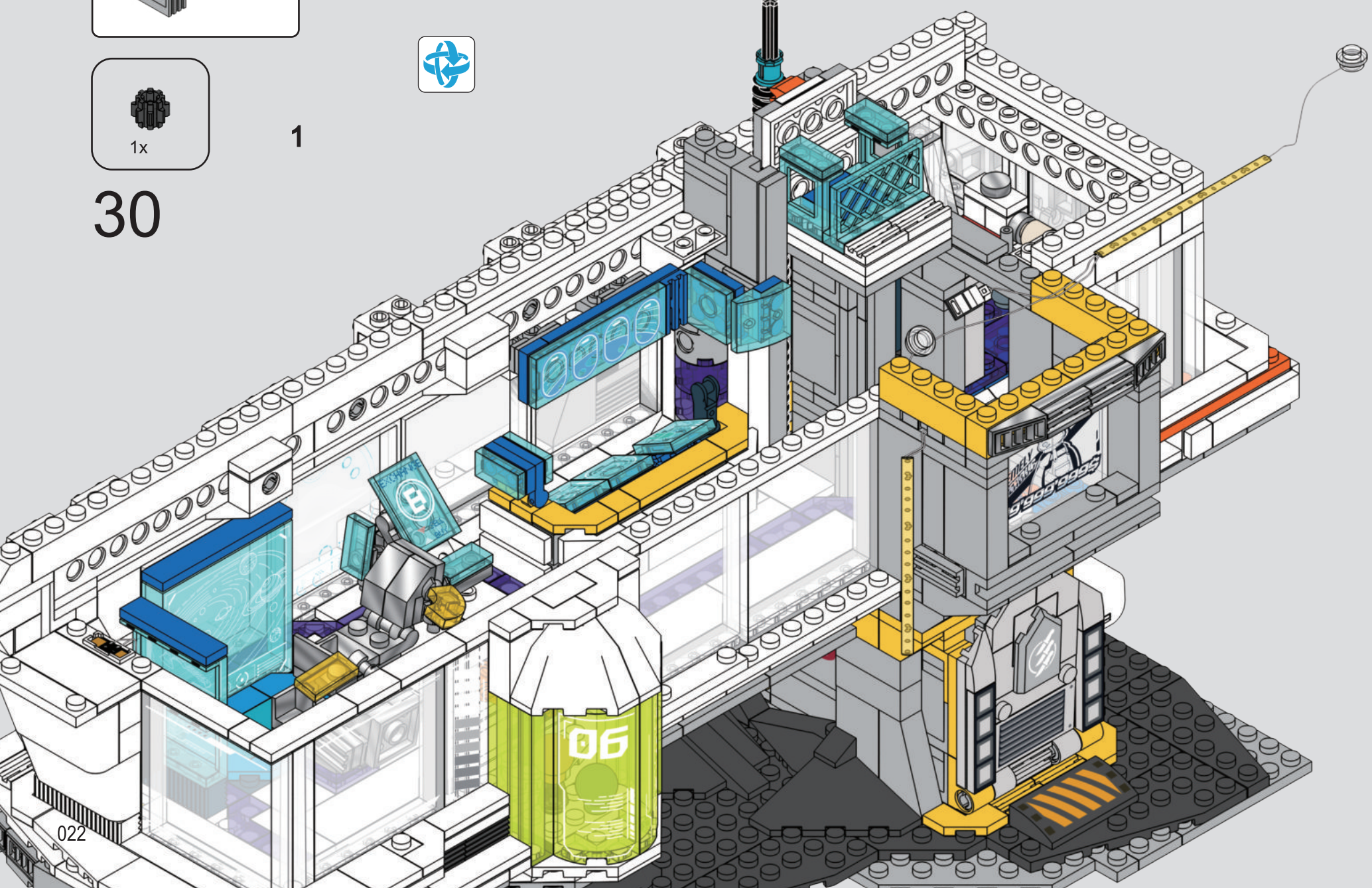

2

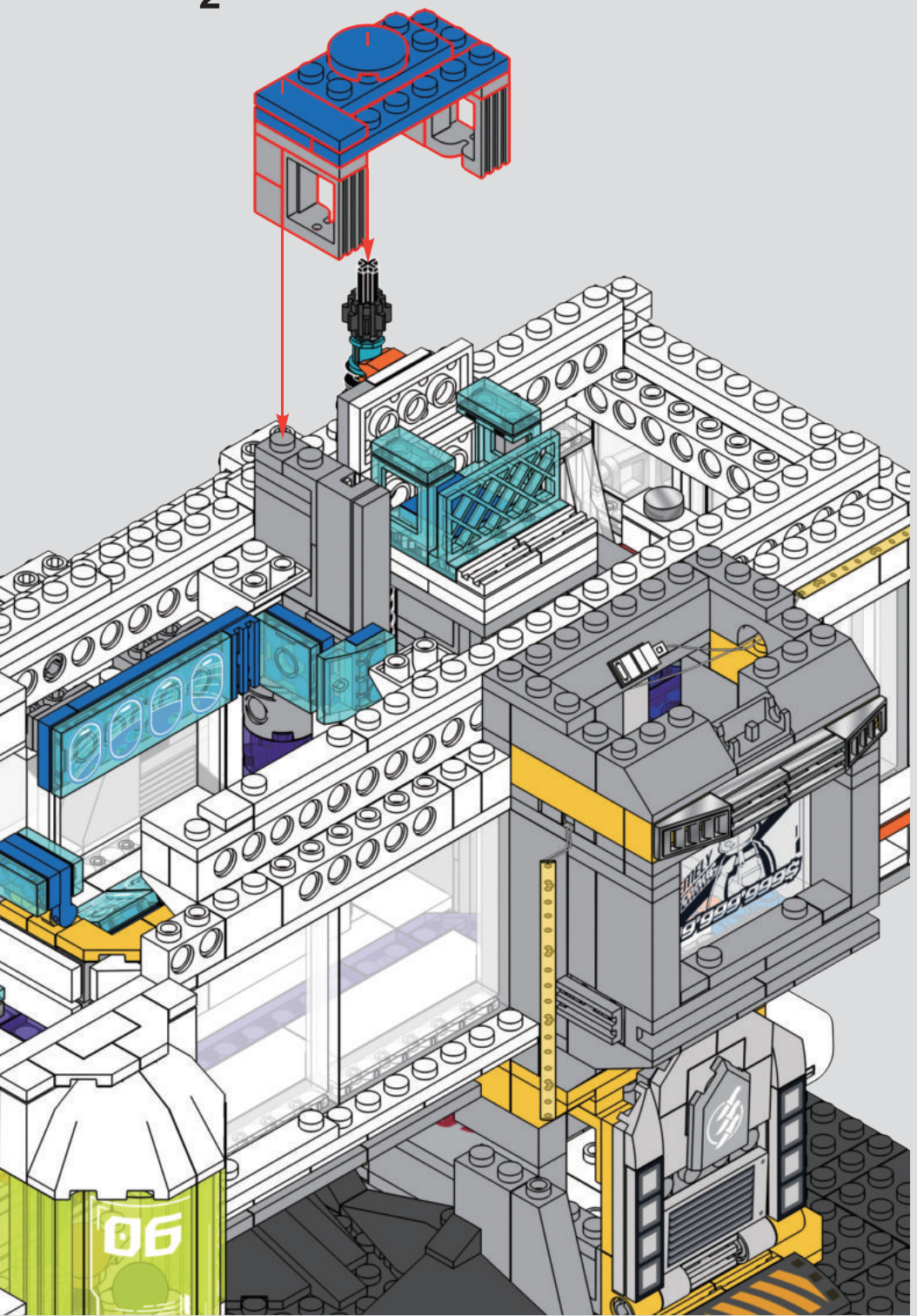

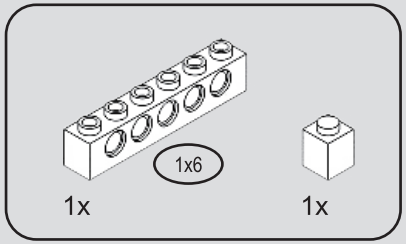

31

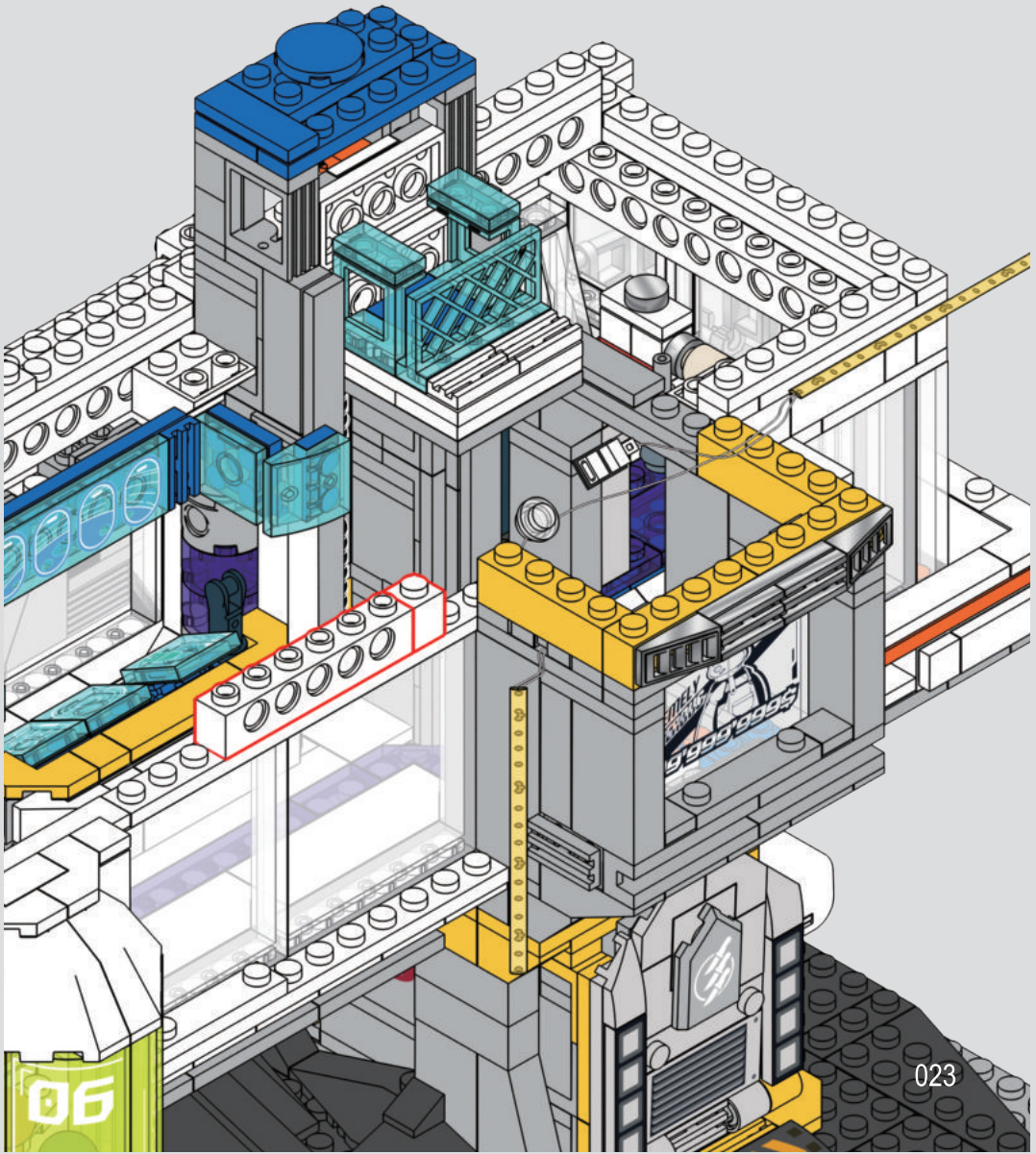

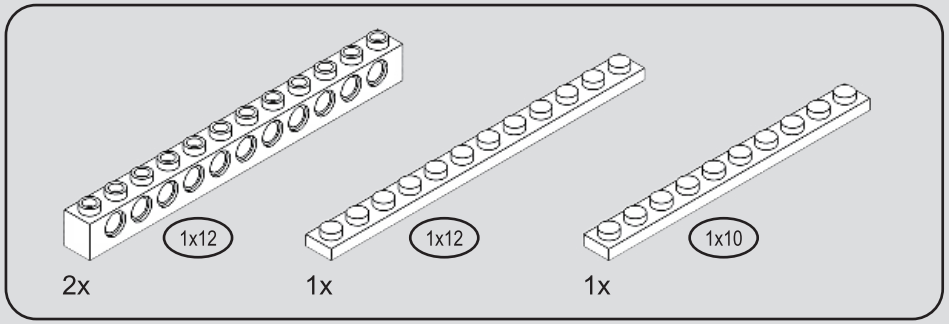

32

1

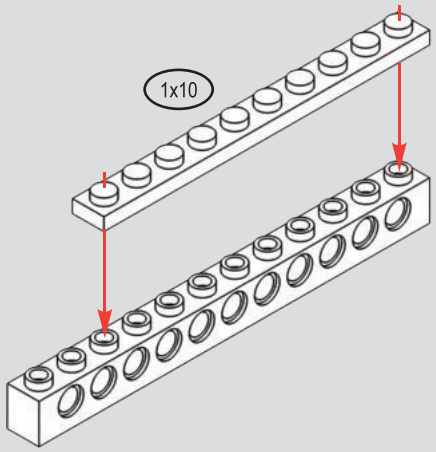

2

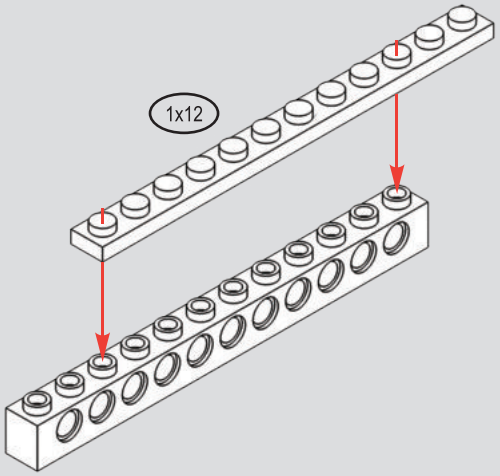

3

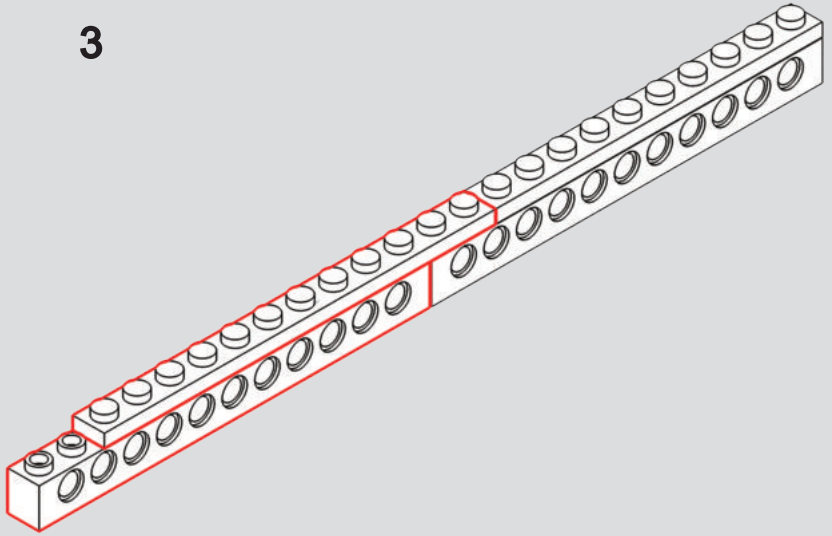

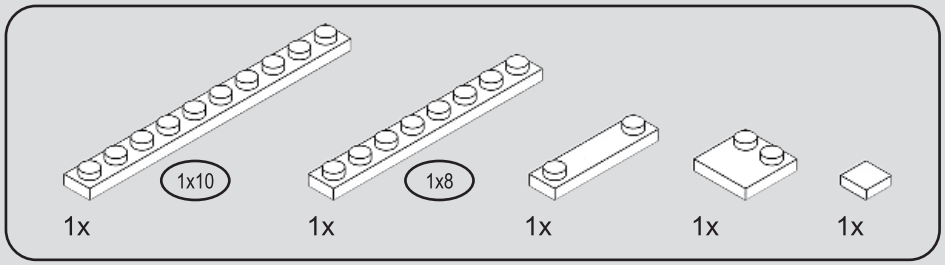

33

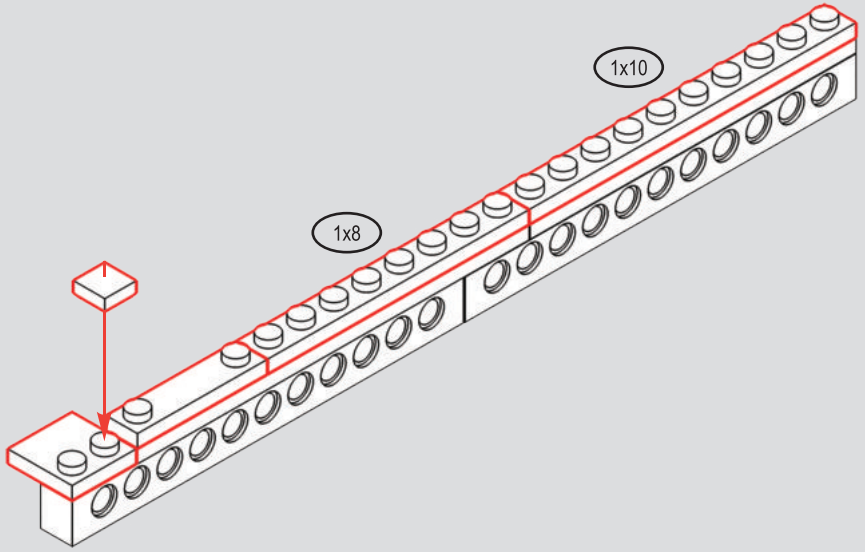

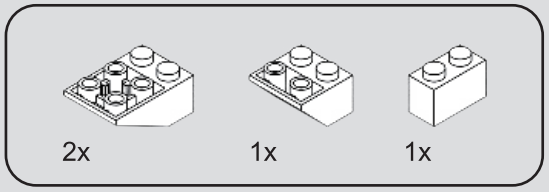

34

1

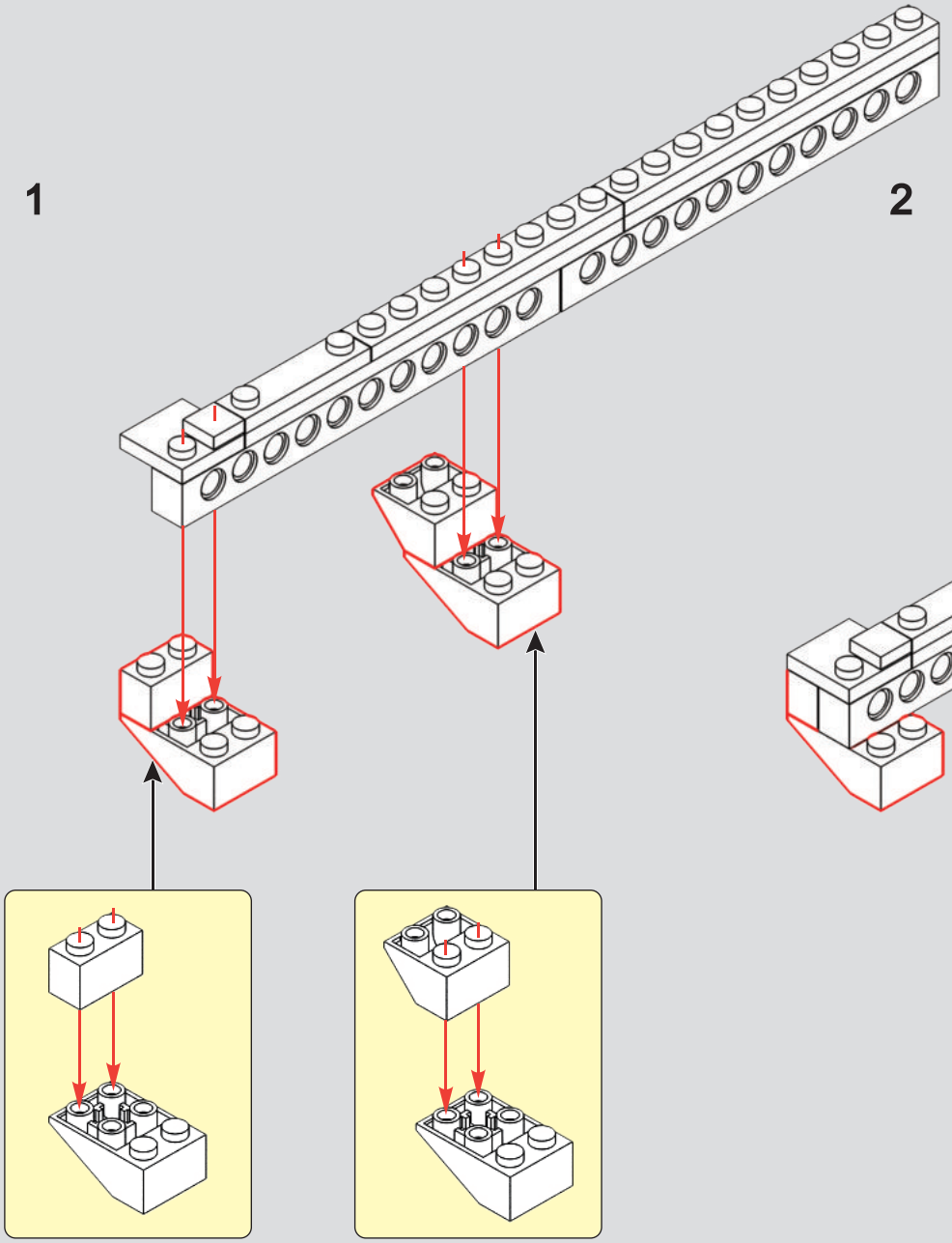

2

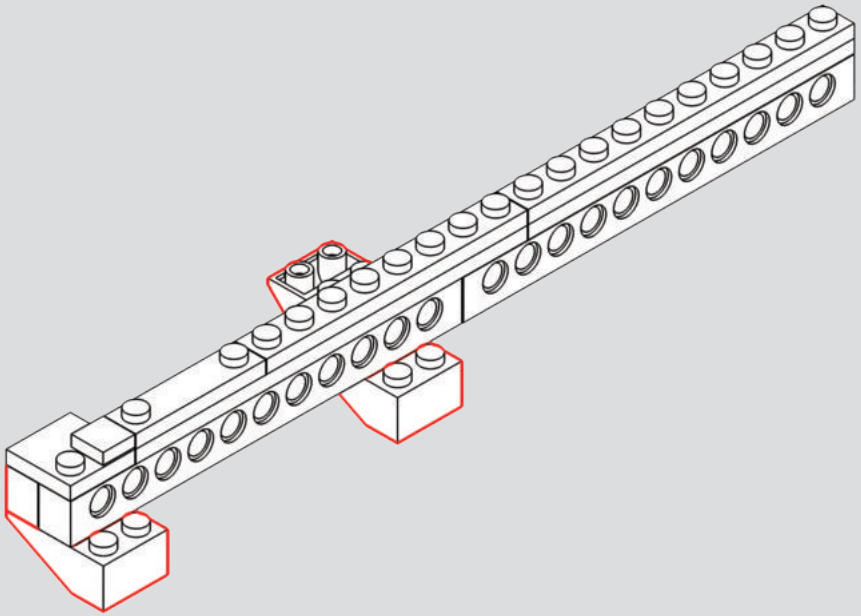

35

1

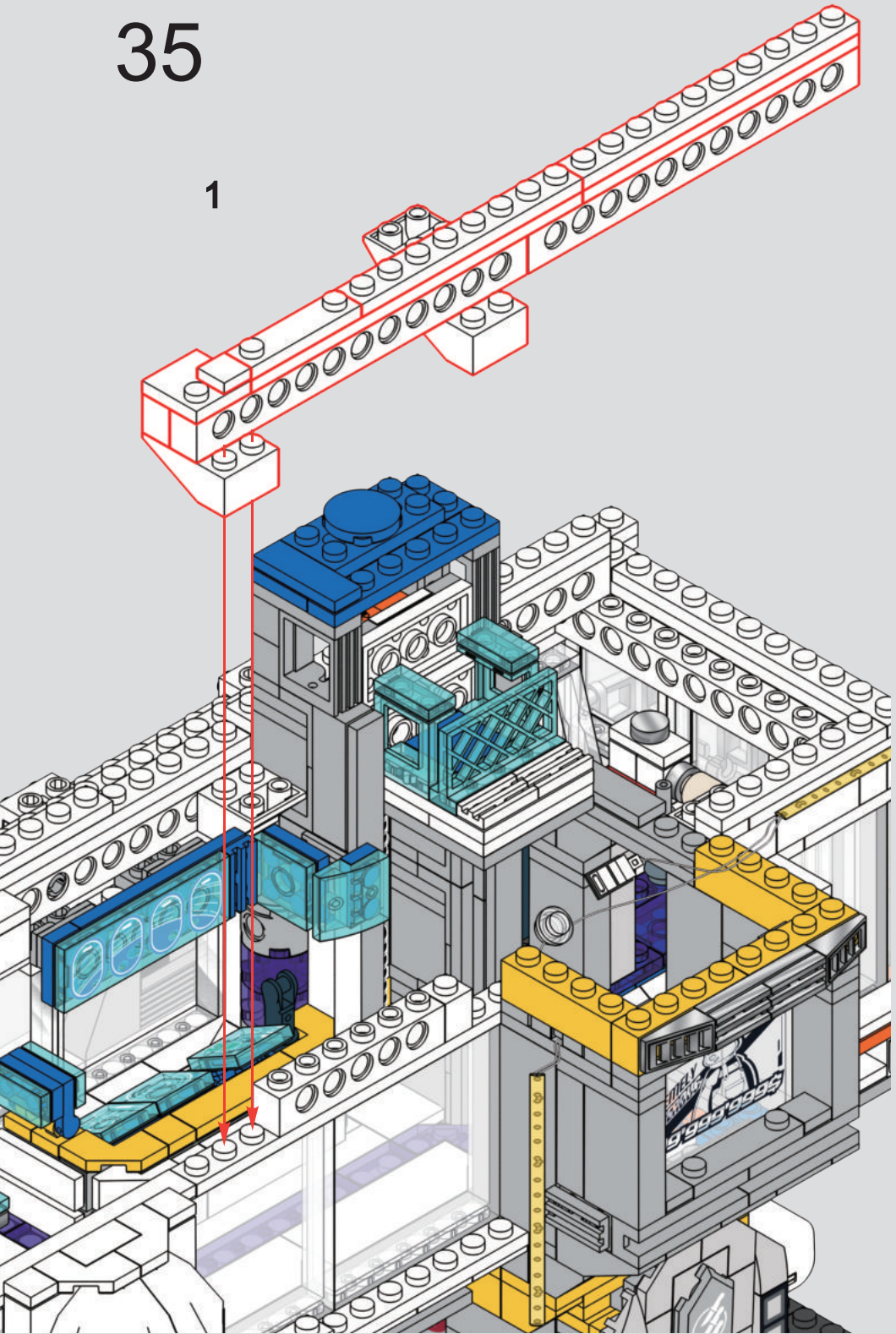

2

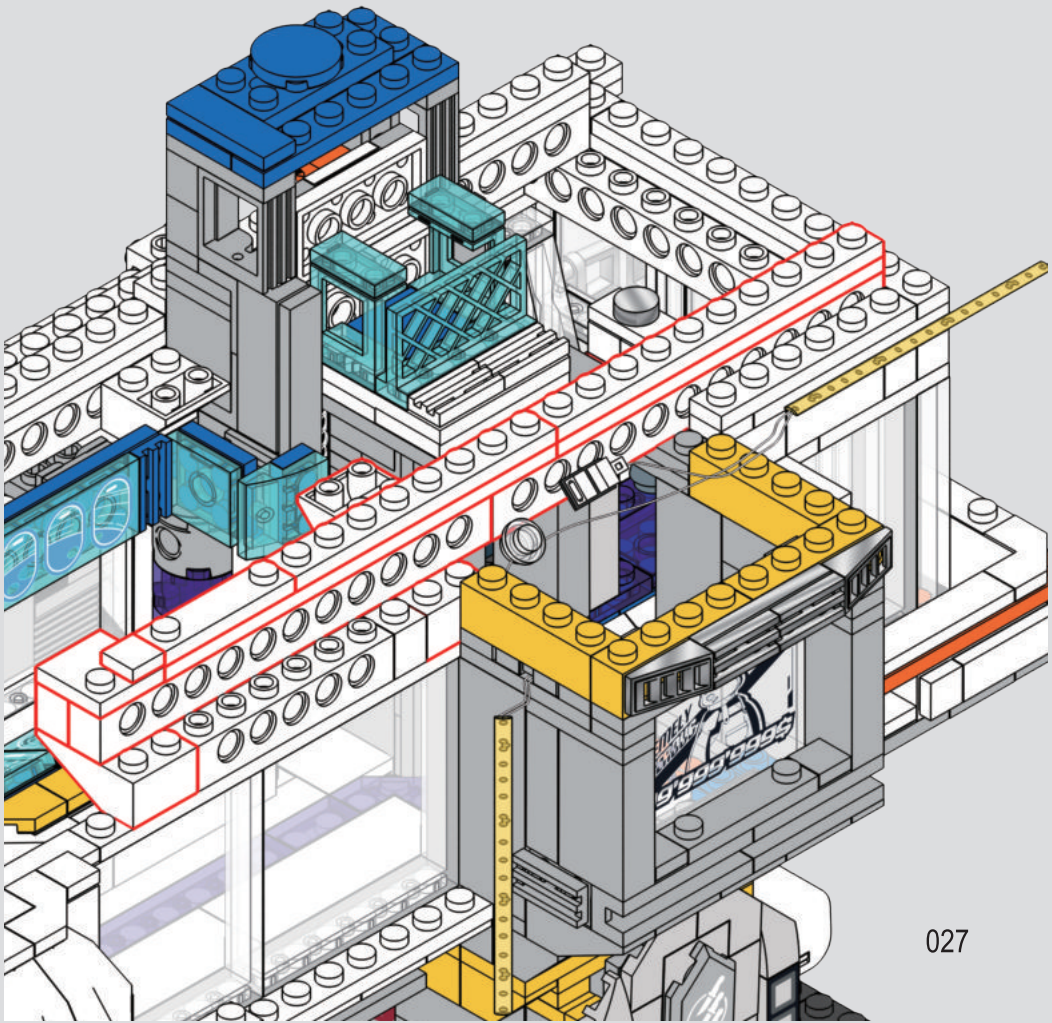

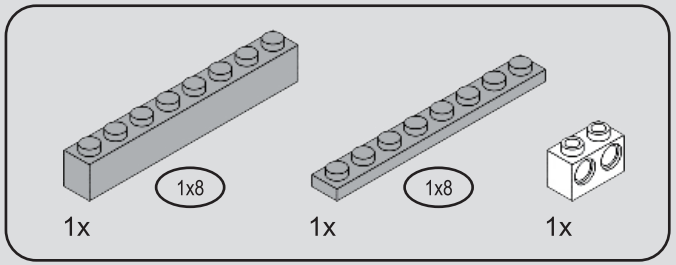

36

1

2

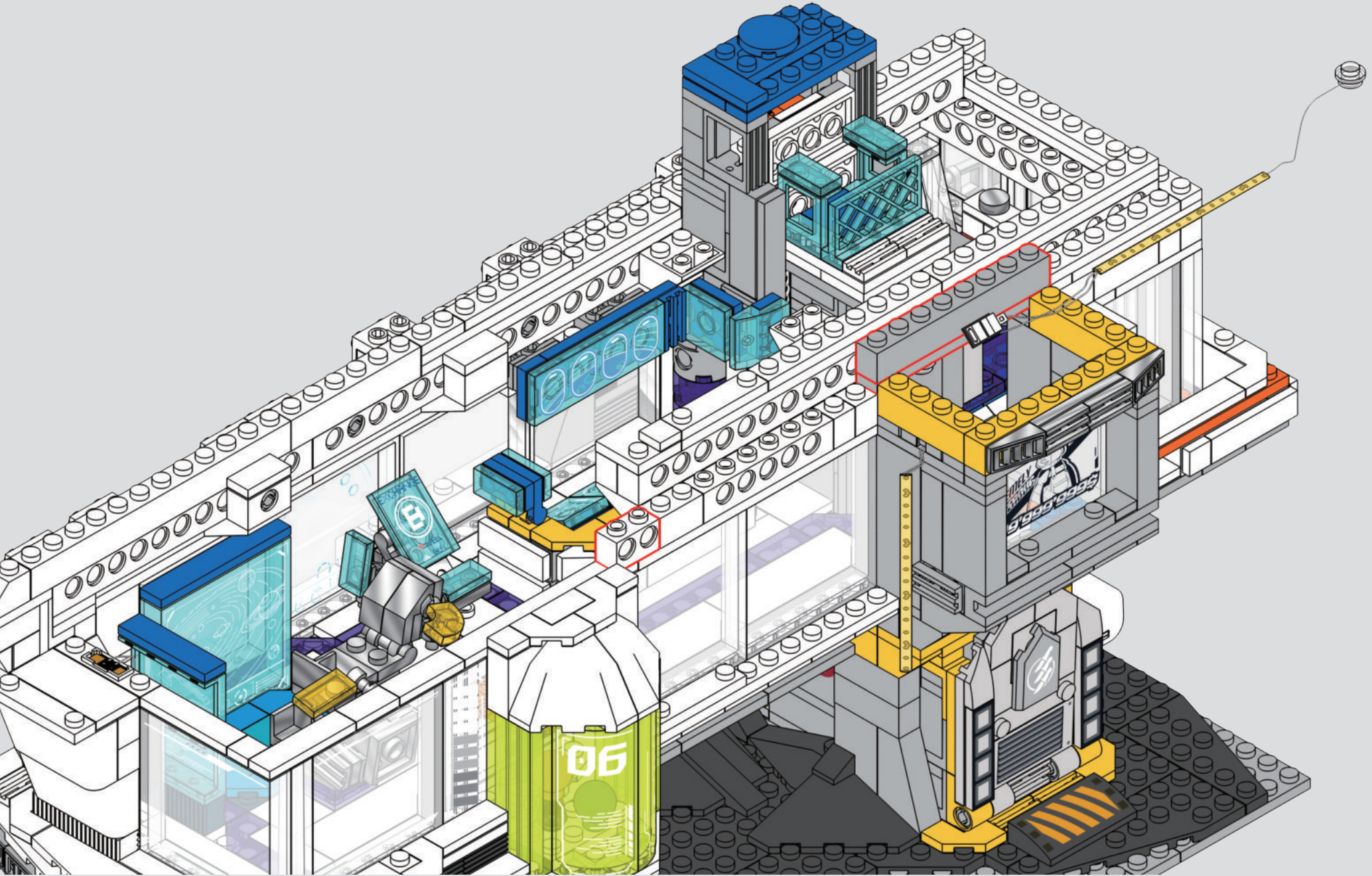

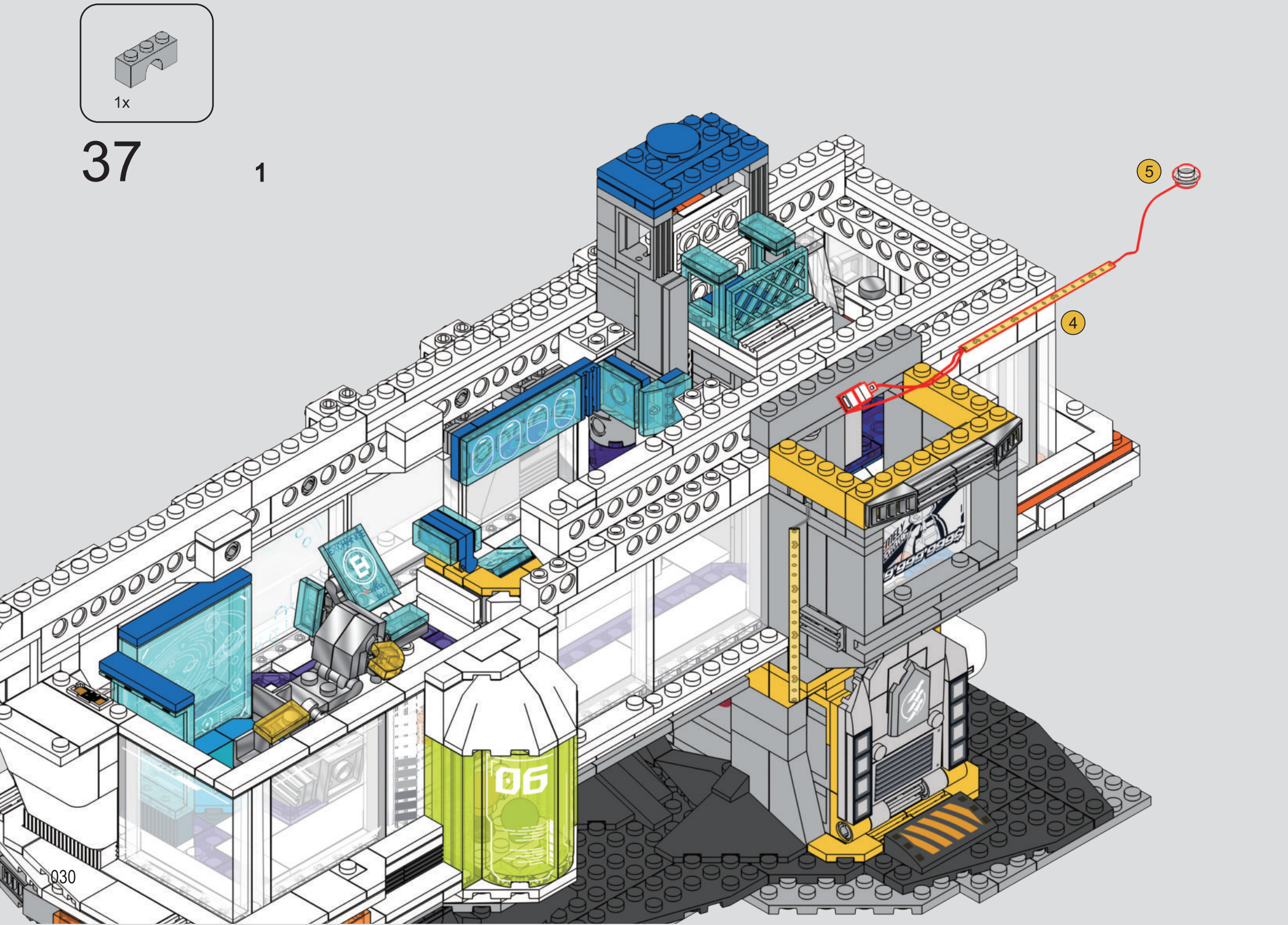
1x
37
1
5
4
06

2

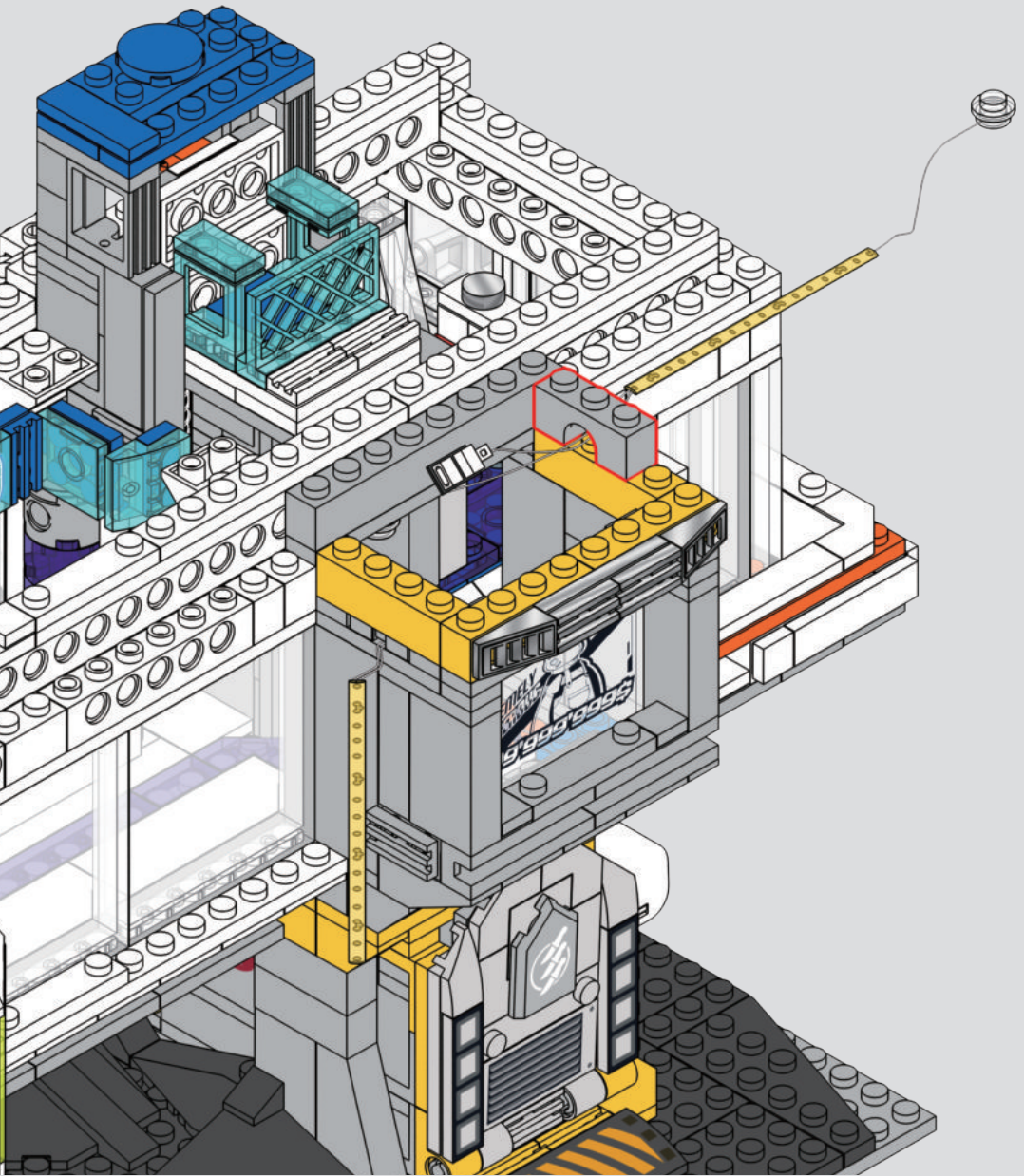

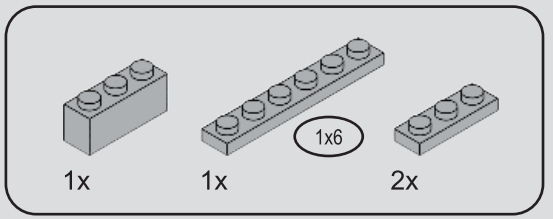

38

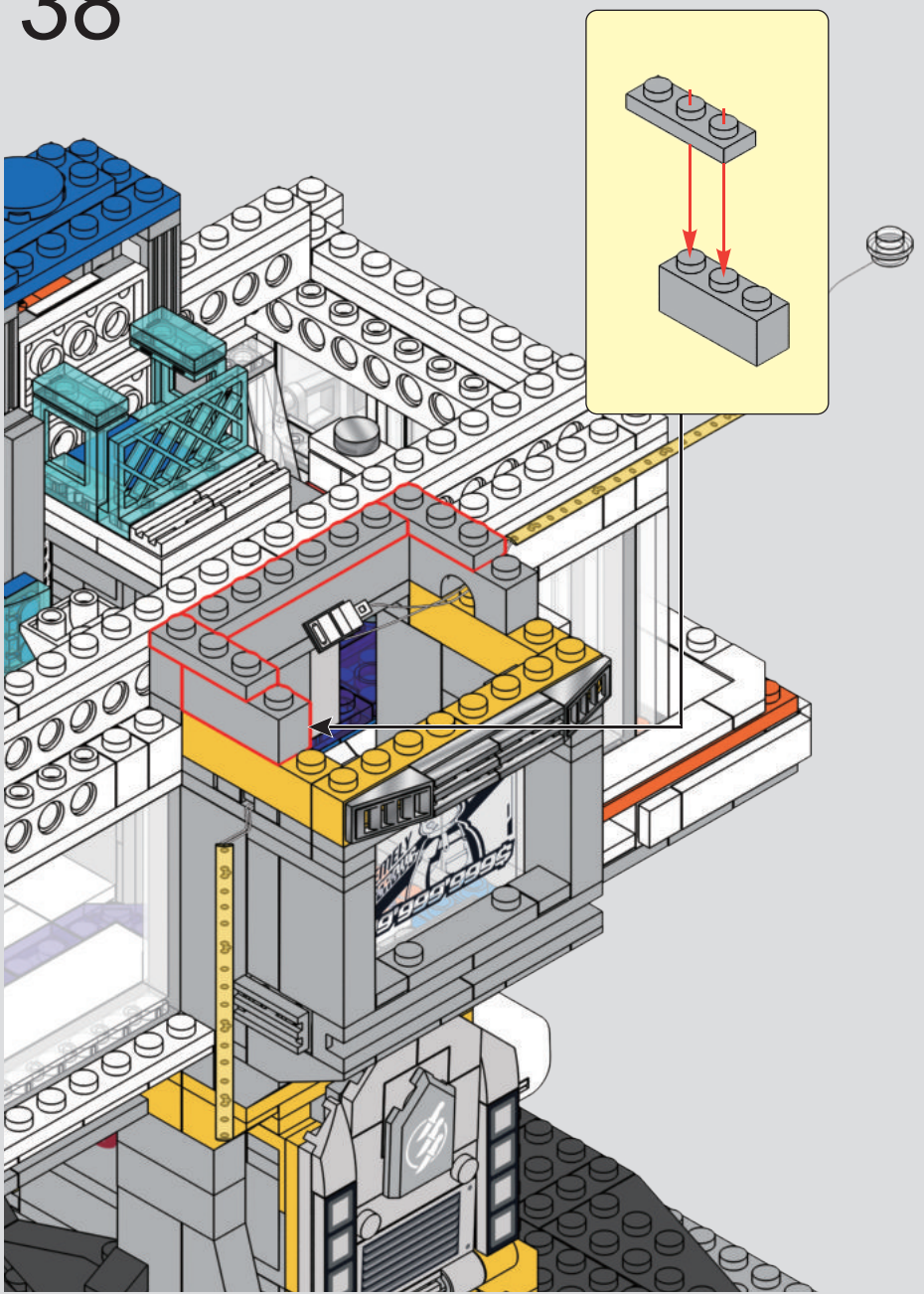

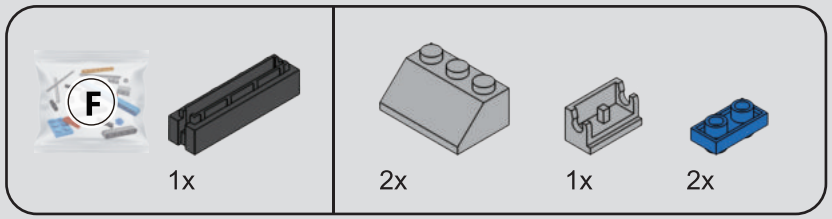

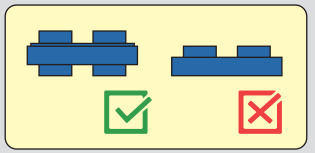

39

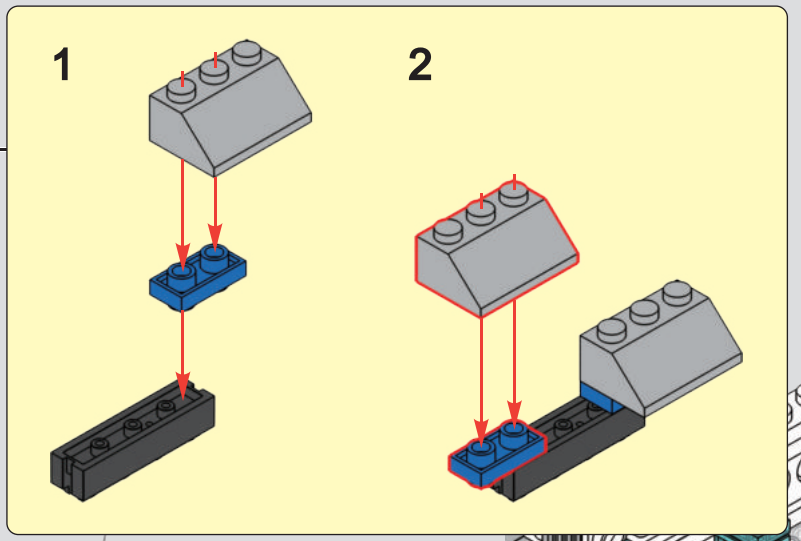

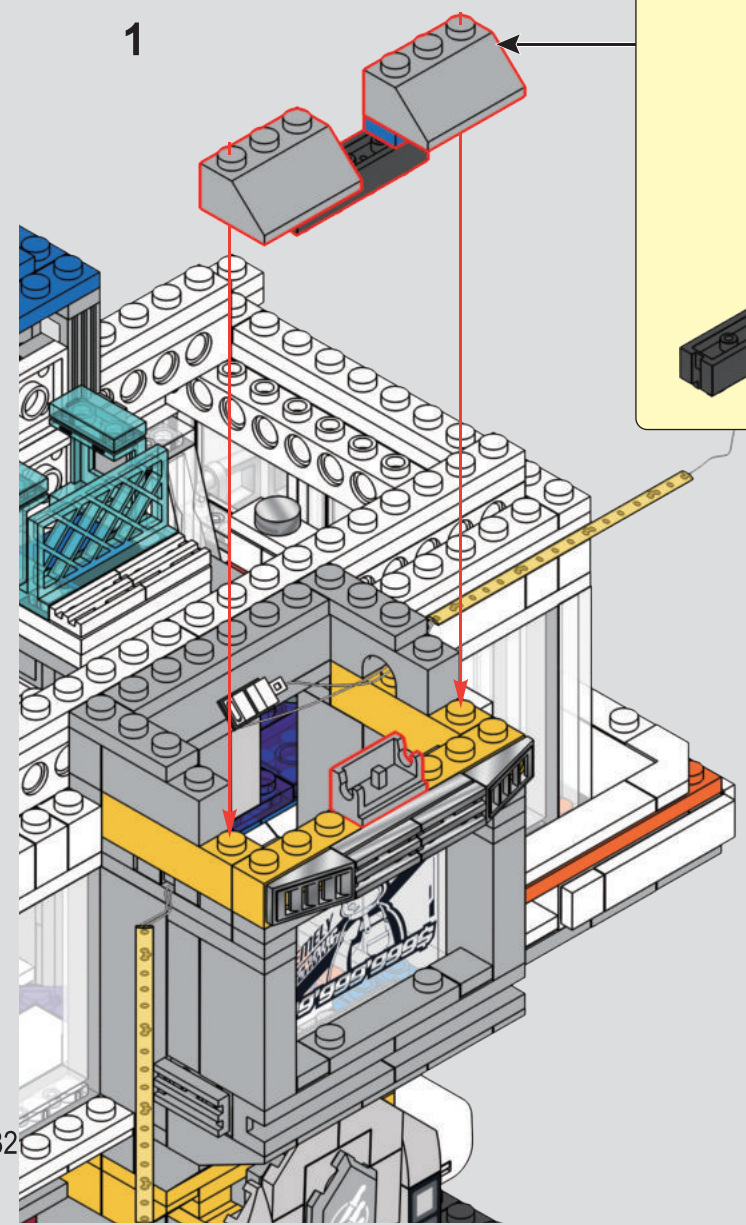

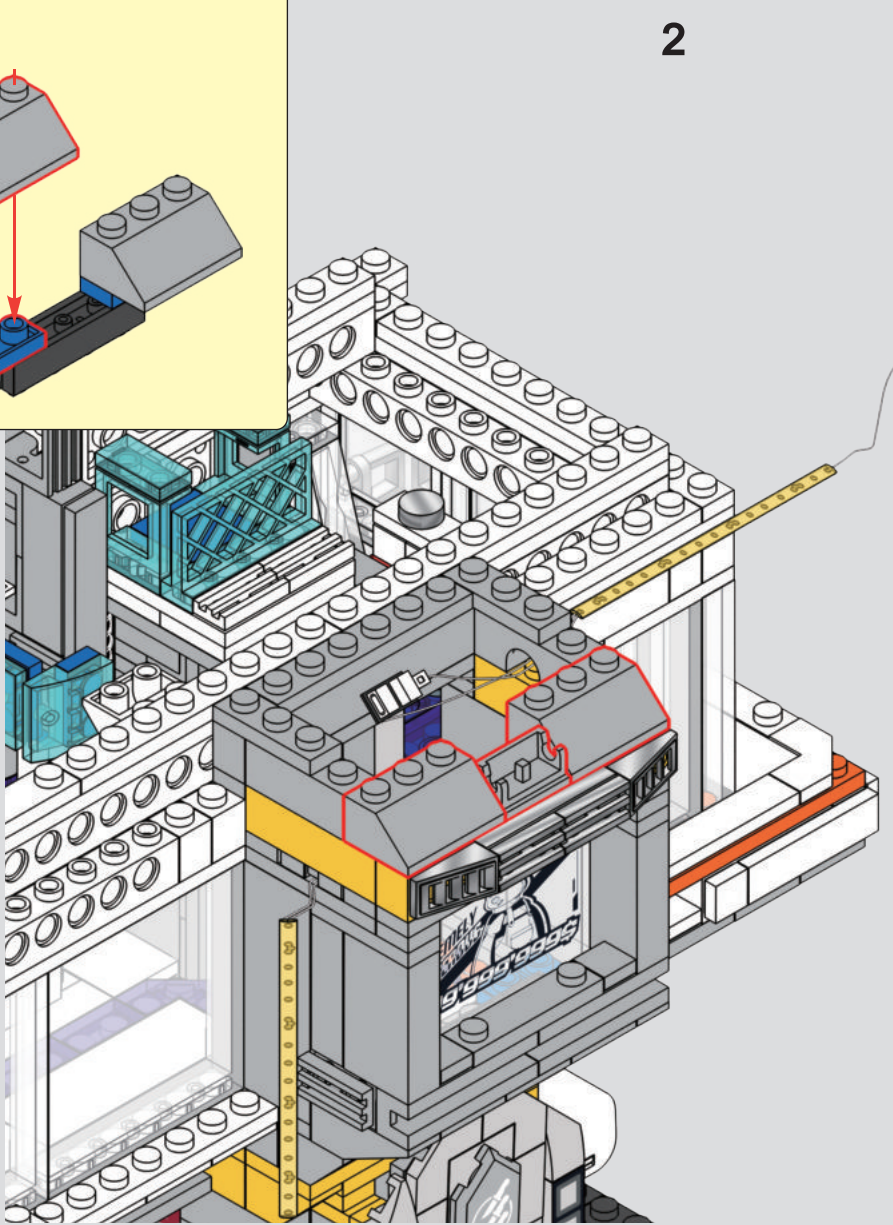

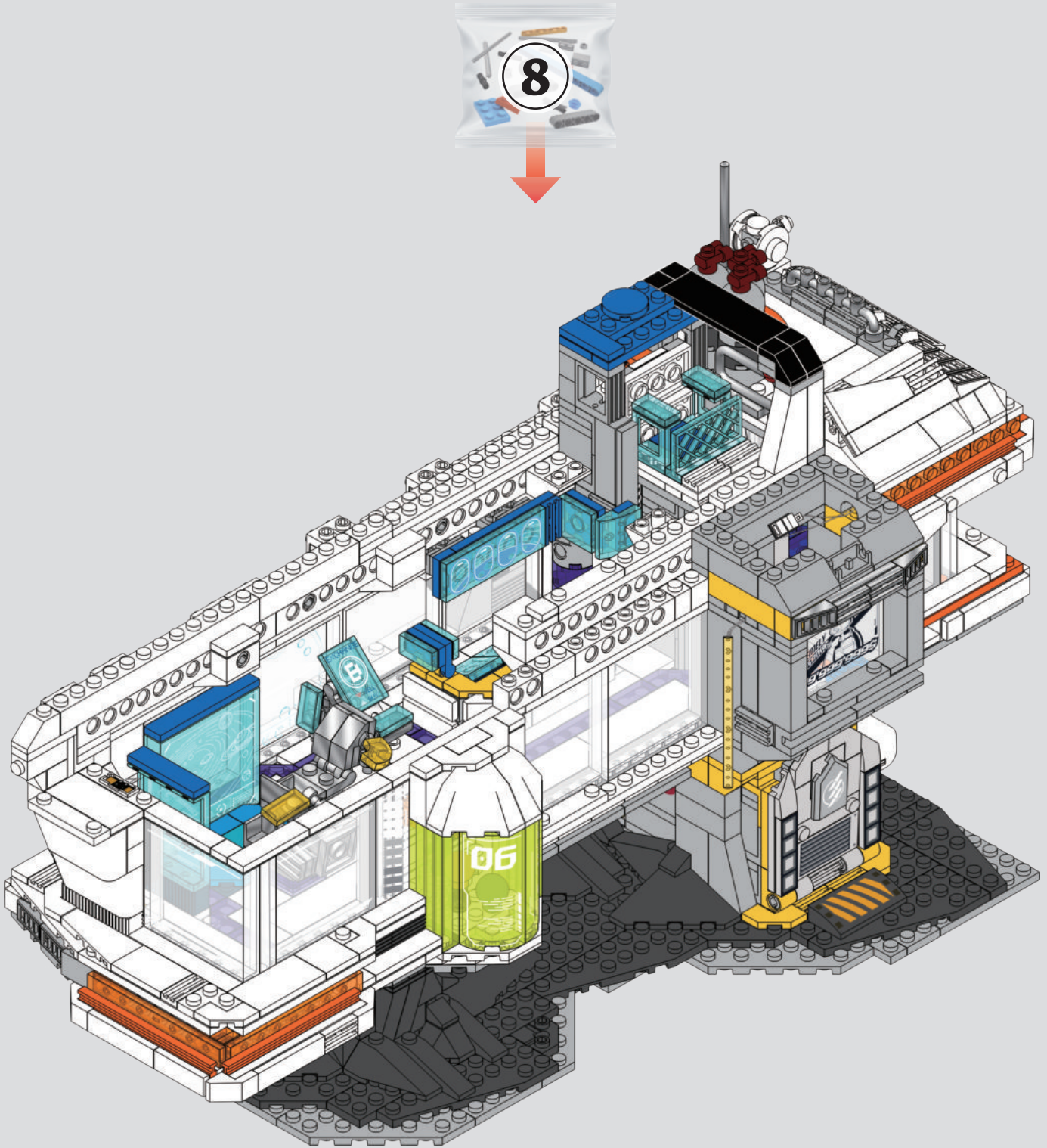
8

40

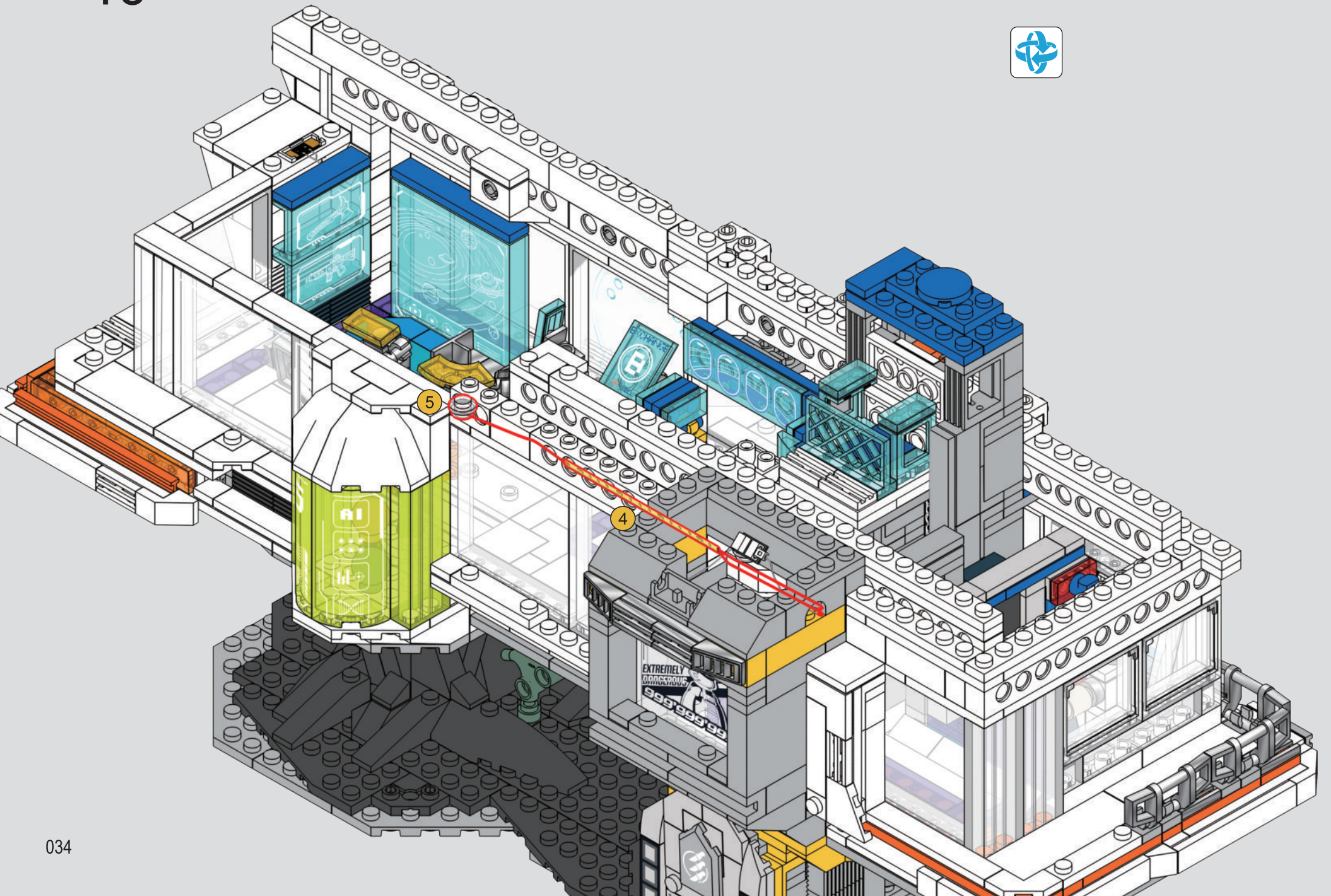

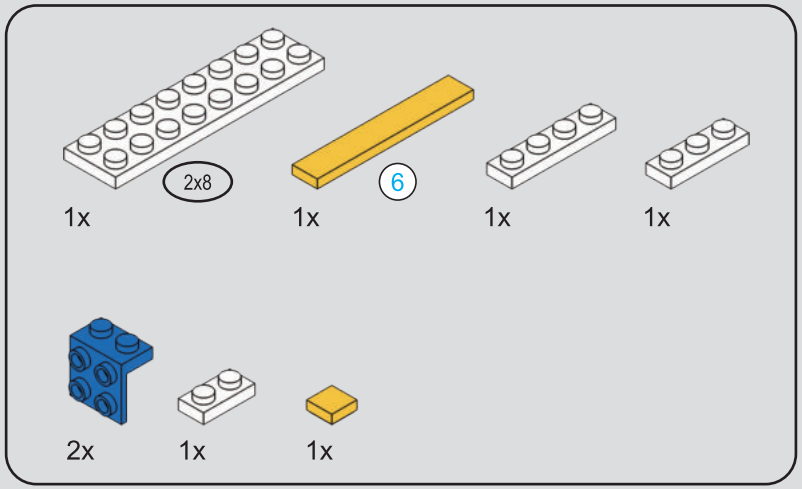
2x8
6
1x
1x
1x
1x
2x
1x
1x


6
1:1

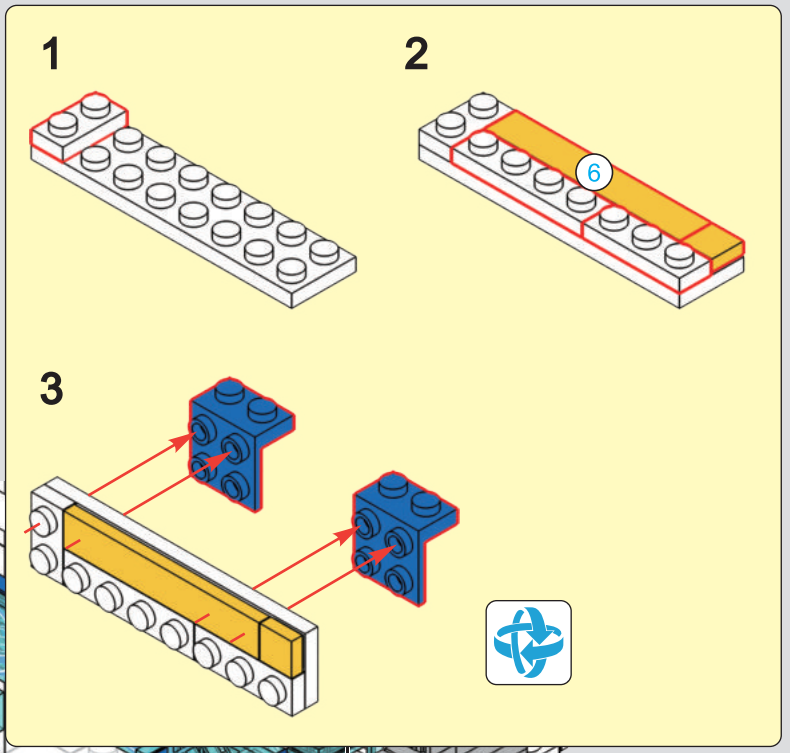
1
2
6
3

41

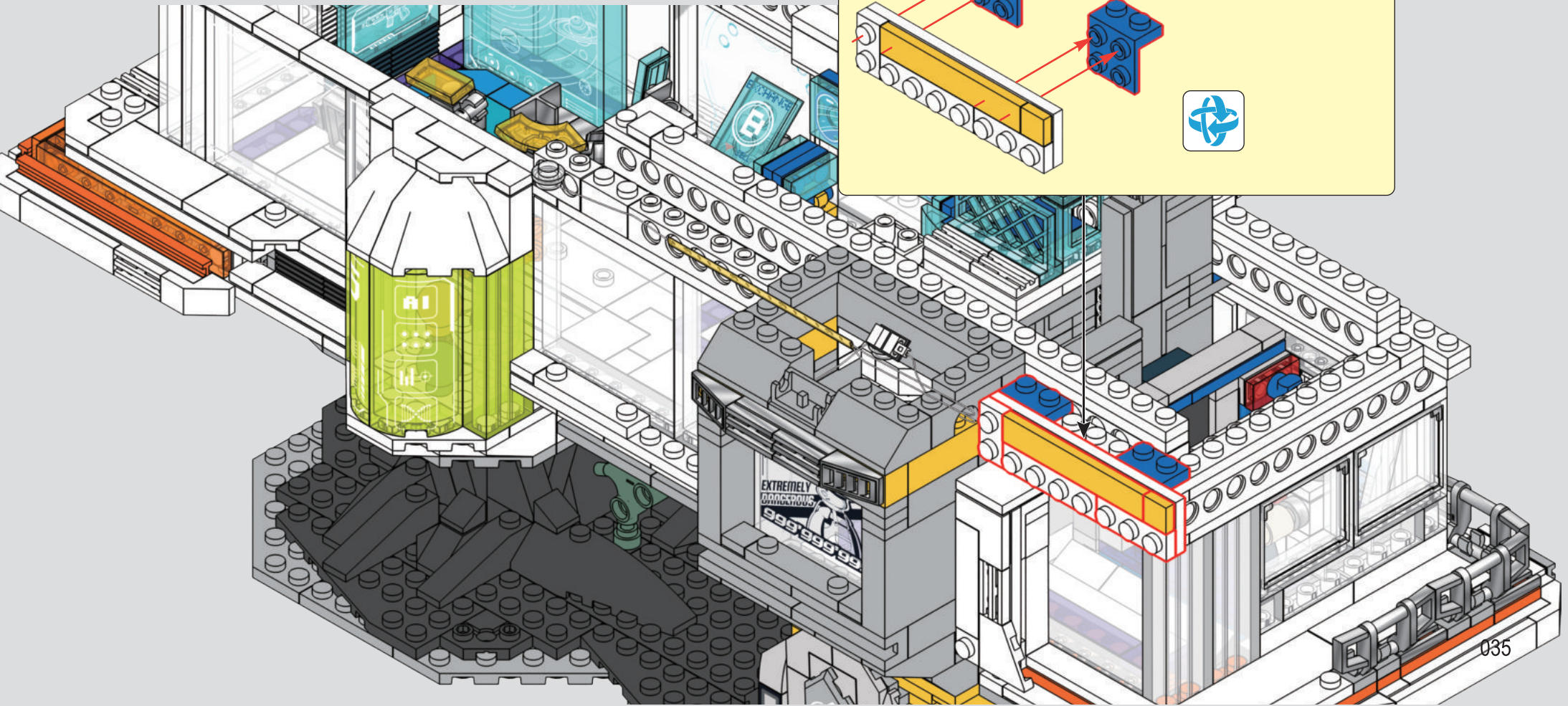
AI
EXTREMELY
DANGEROUS
999999999

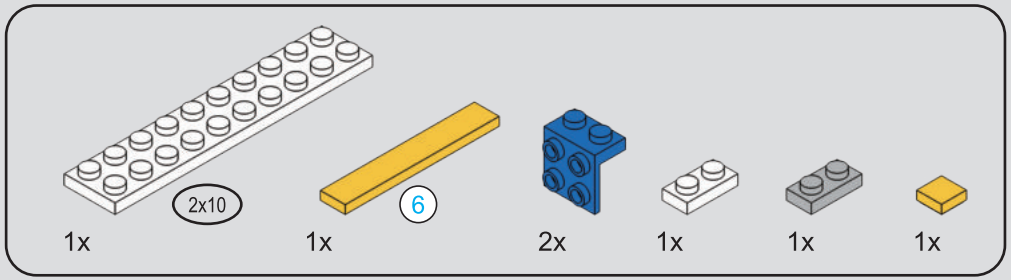



42

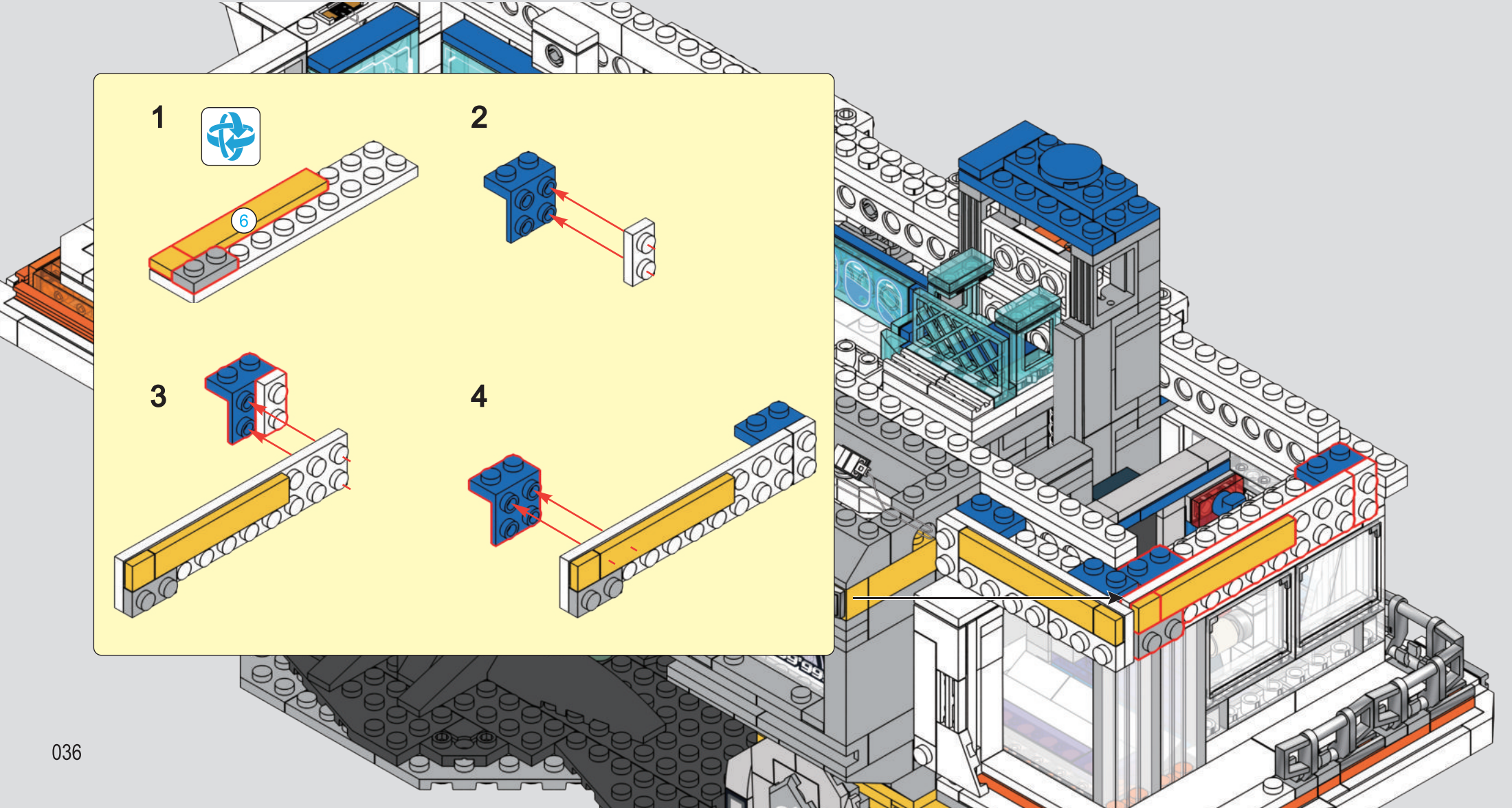

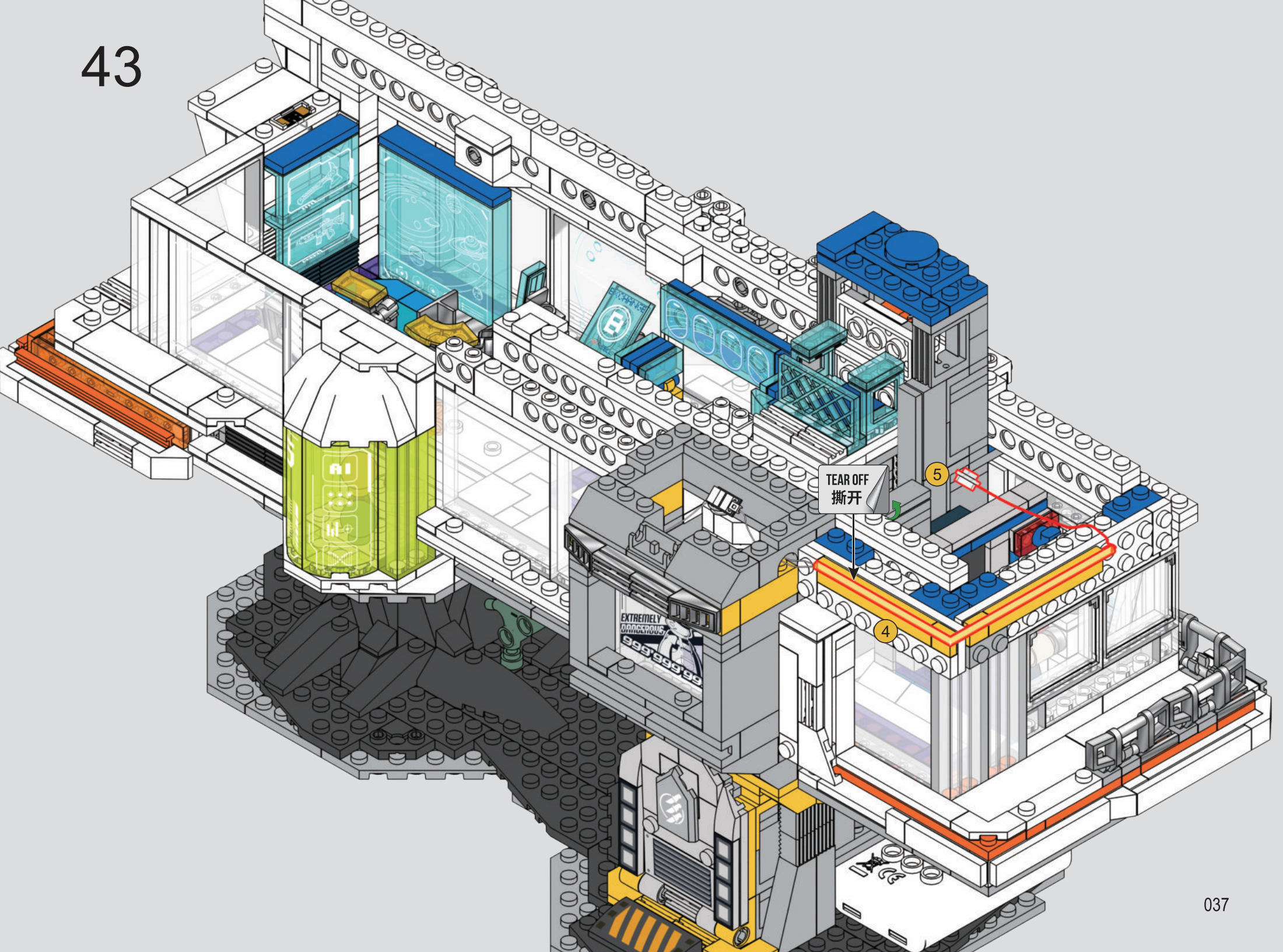
TEAR OFF
撕开
5
4
EXTREMELY
DANGEROUS
999'999'99

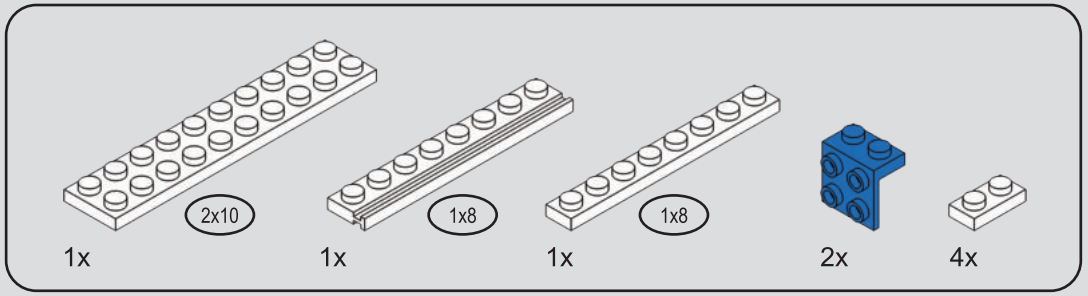

44

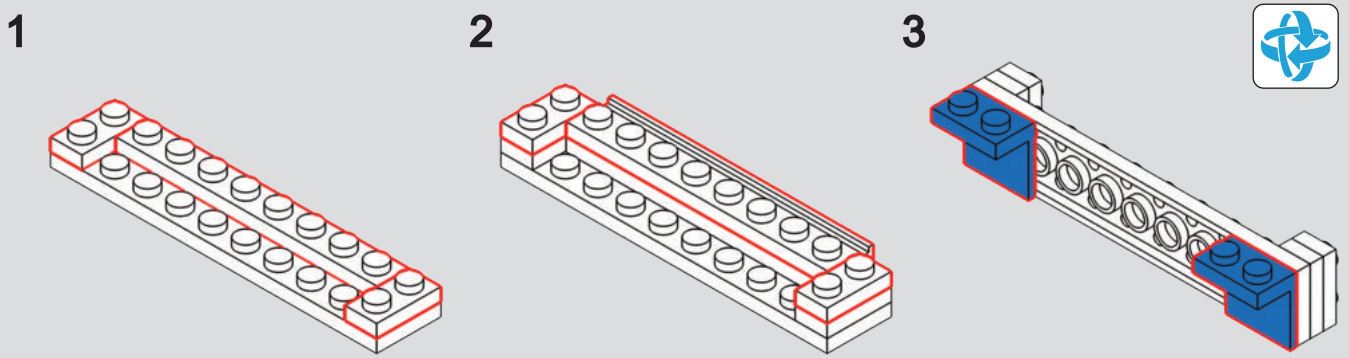

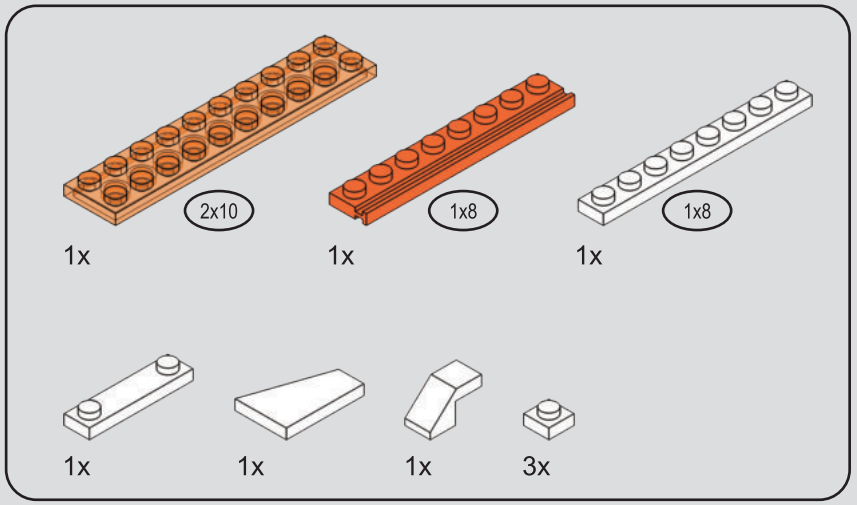

45

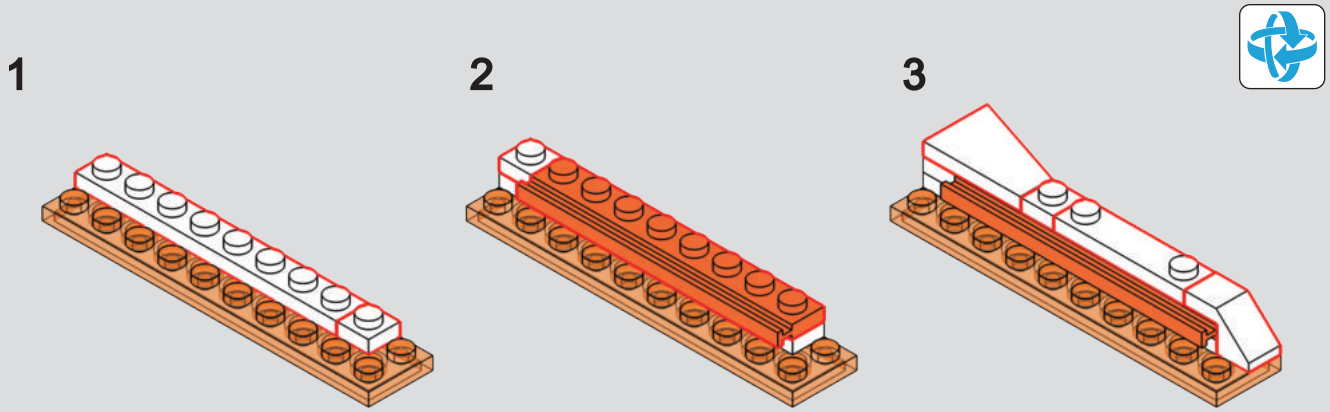

46

1

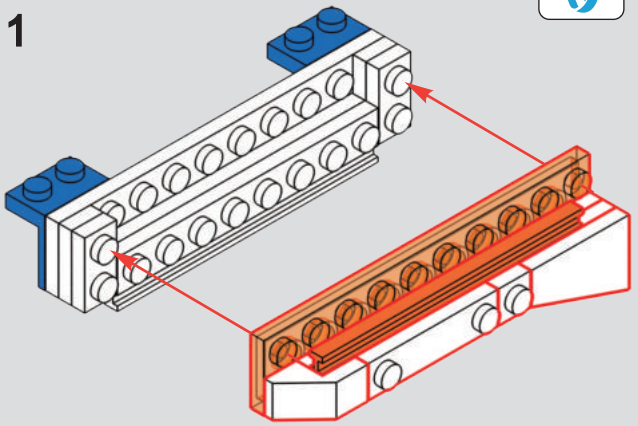

2

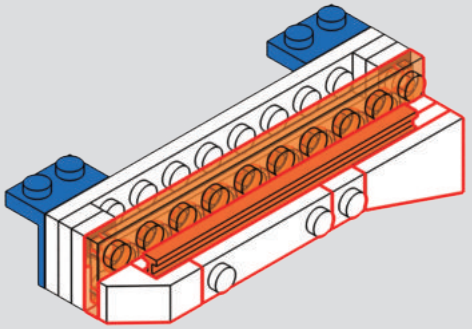

47

1

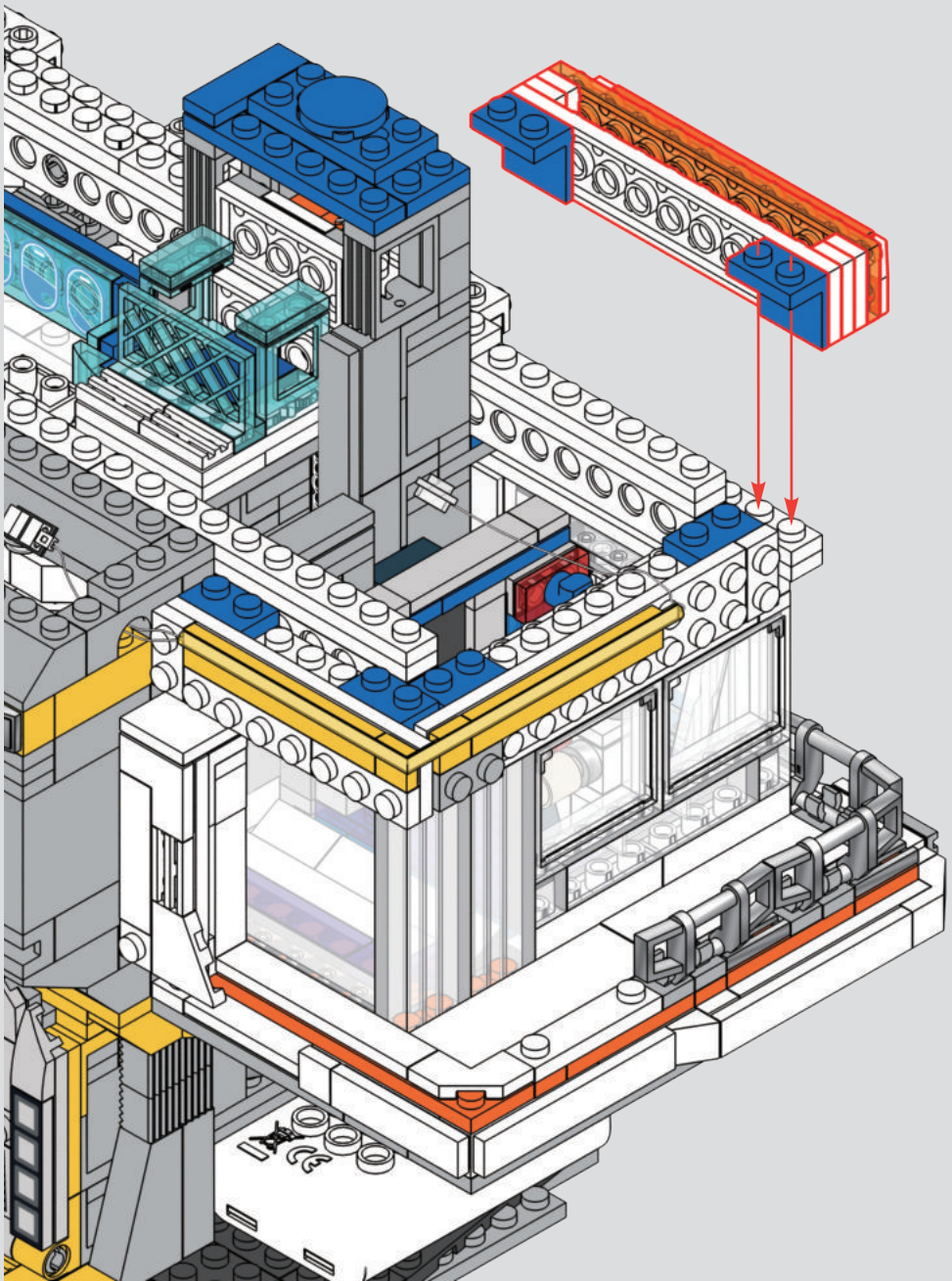

2

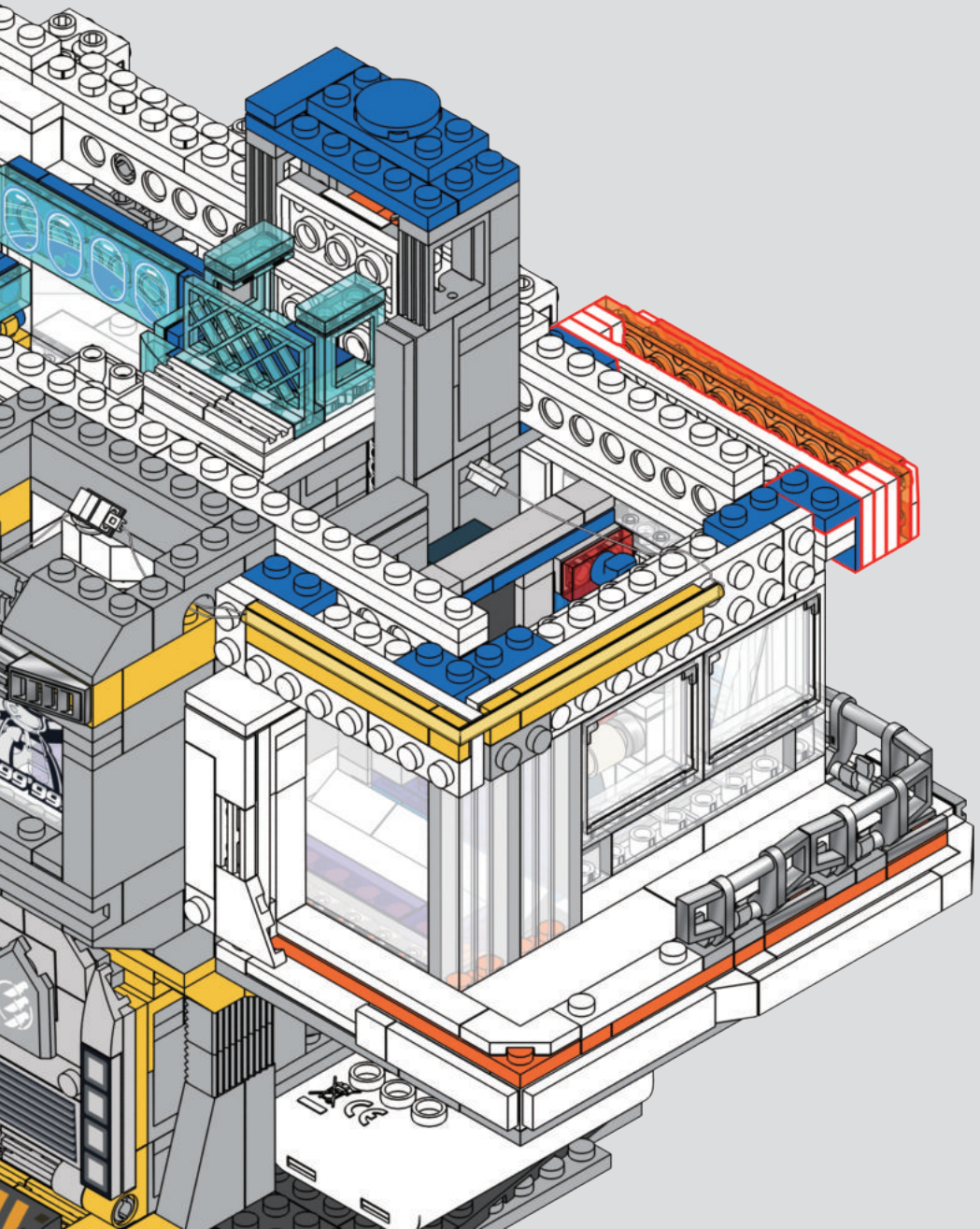

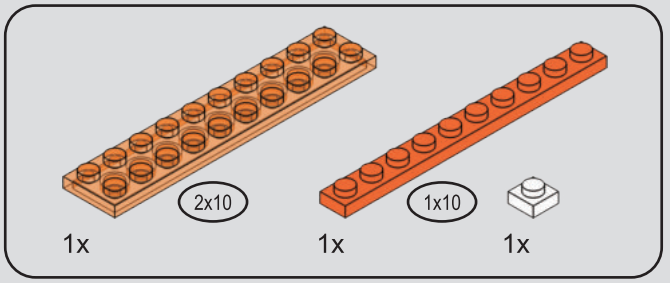

48

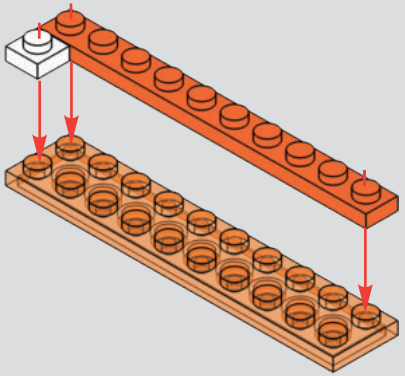

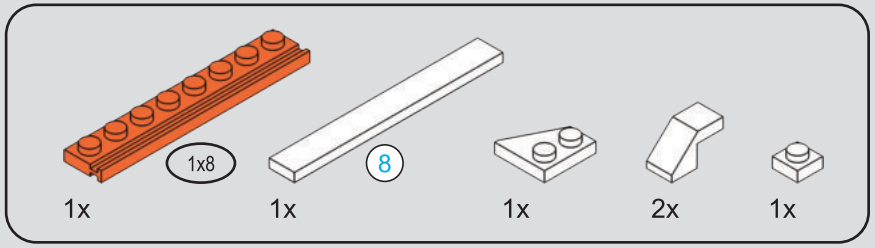

49

1

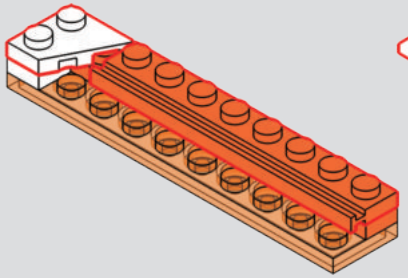

2

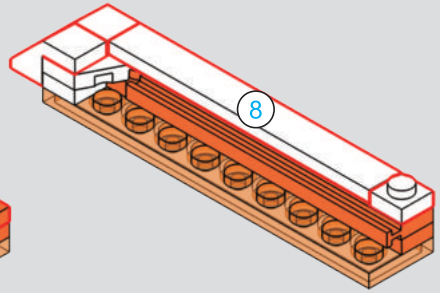

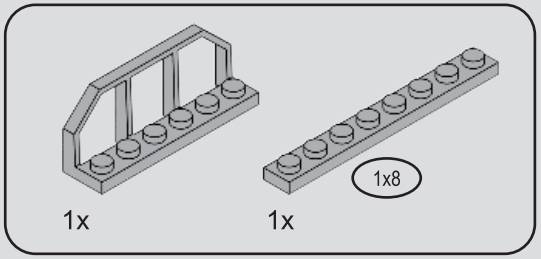

50

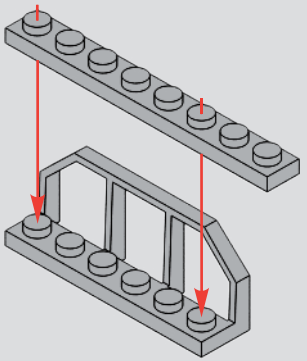

8 1:1

51

1

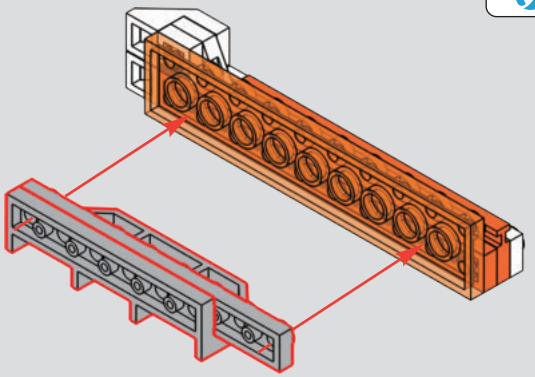

2

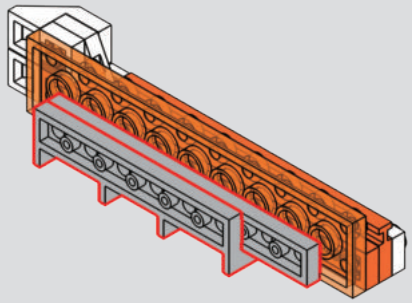

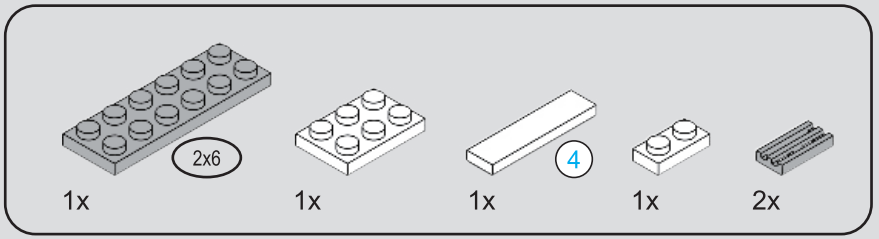

52

1

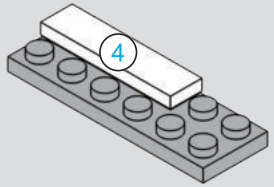

2

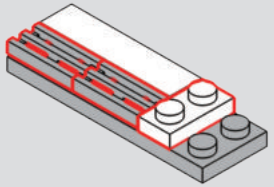

3

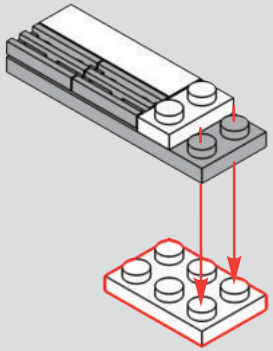

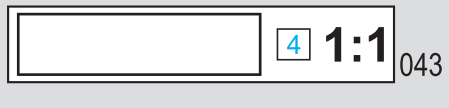

53

1

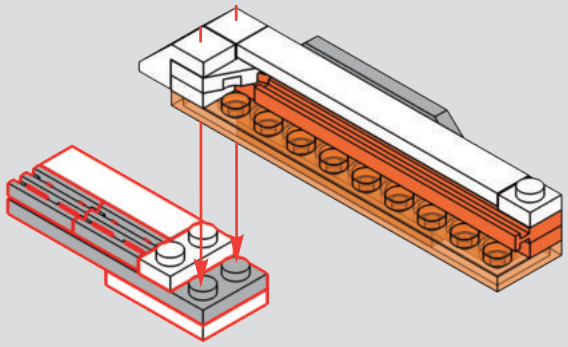

2

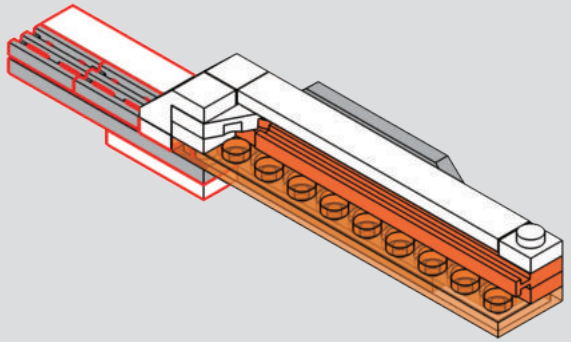

54

1

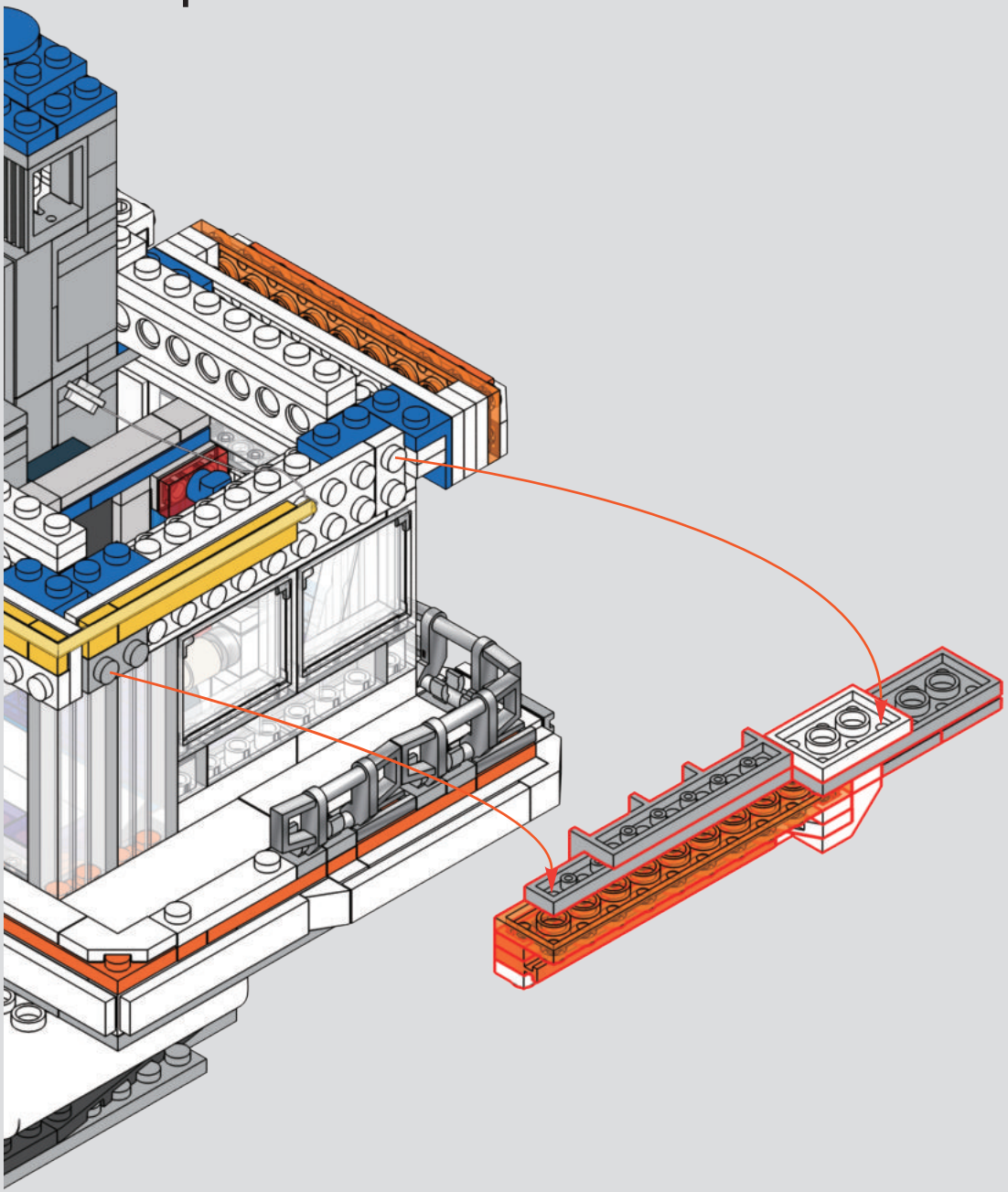

2

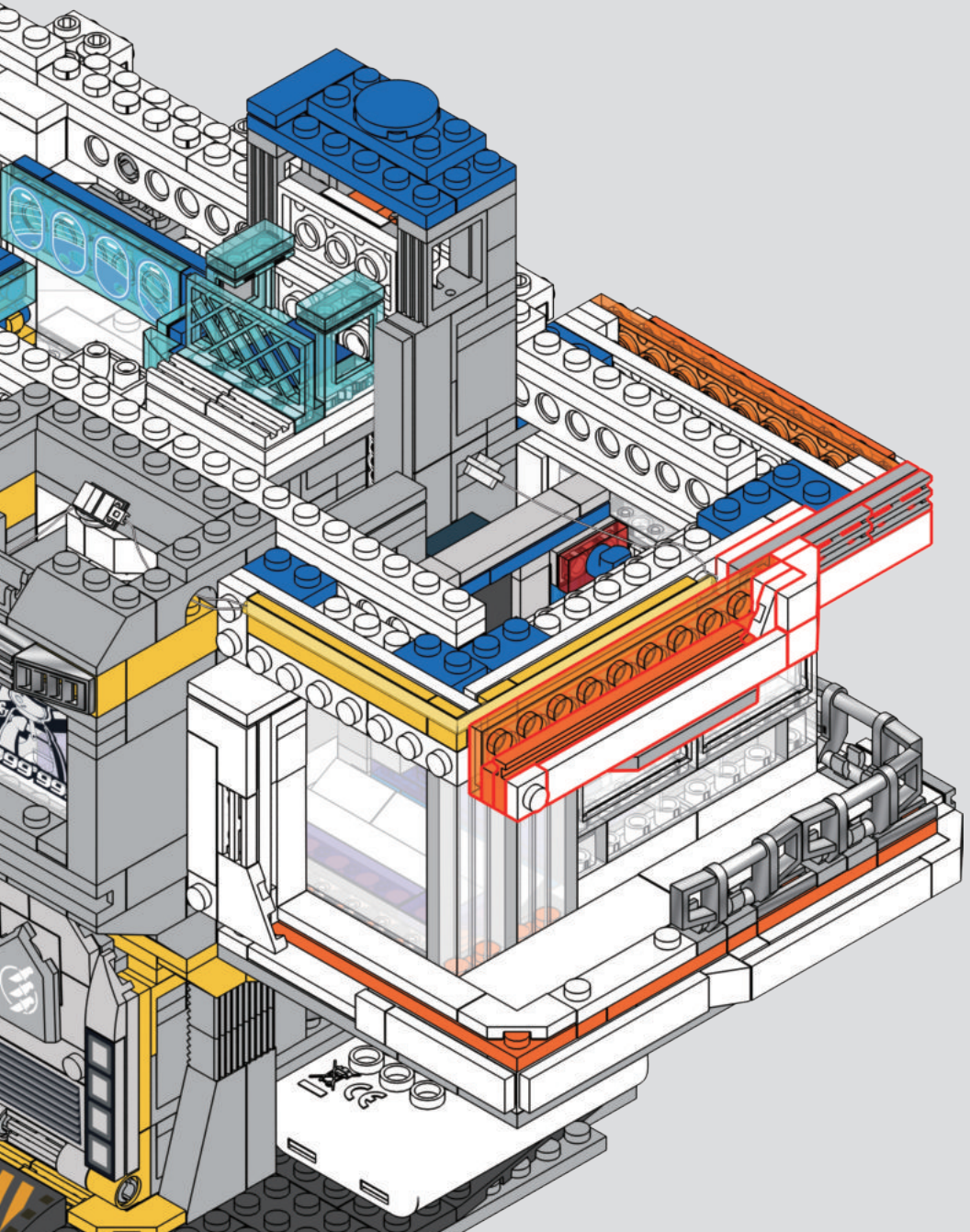

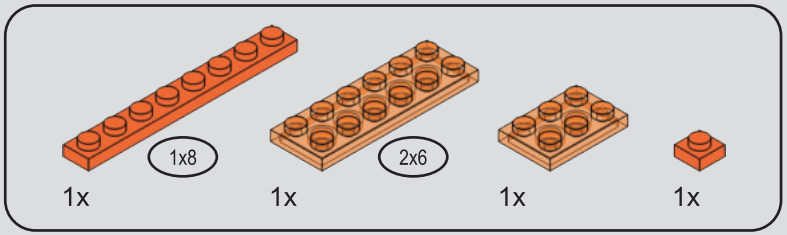

55

1

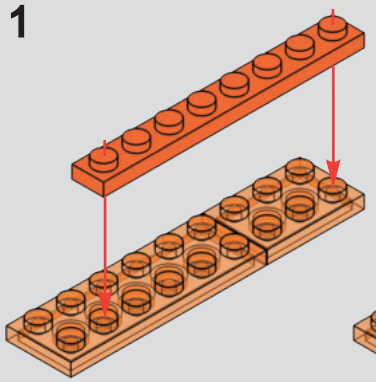

2

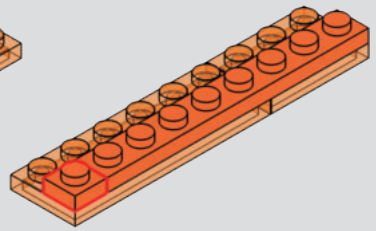

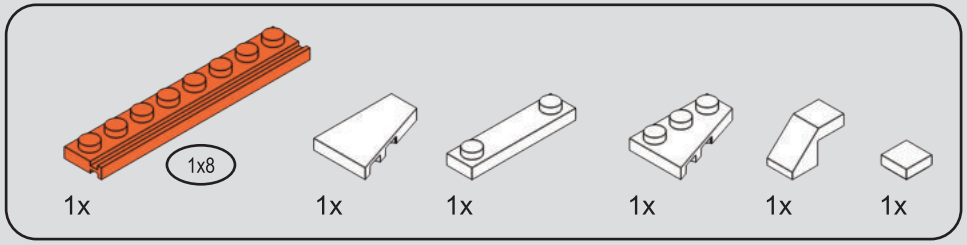

56

1

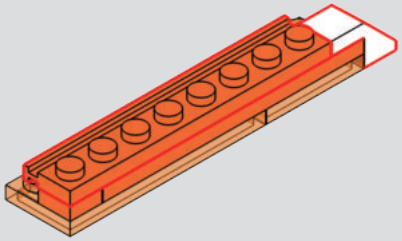

2

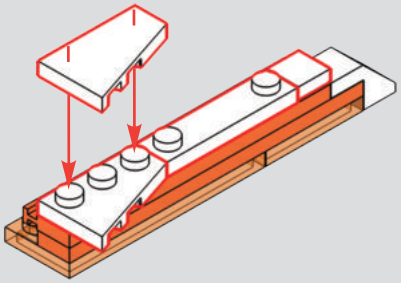

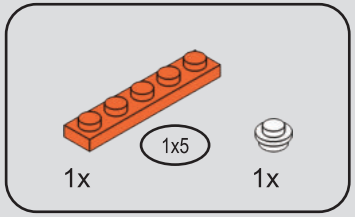

57

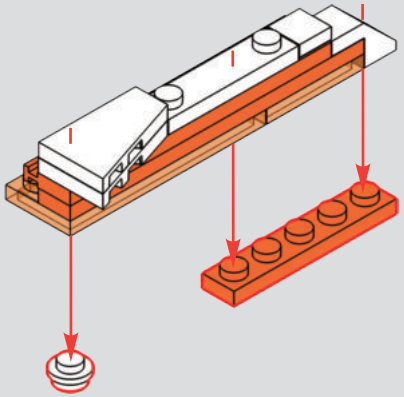

58

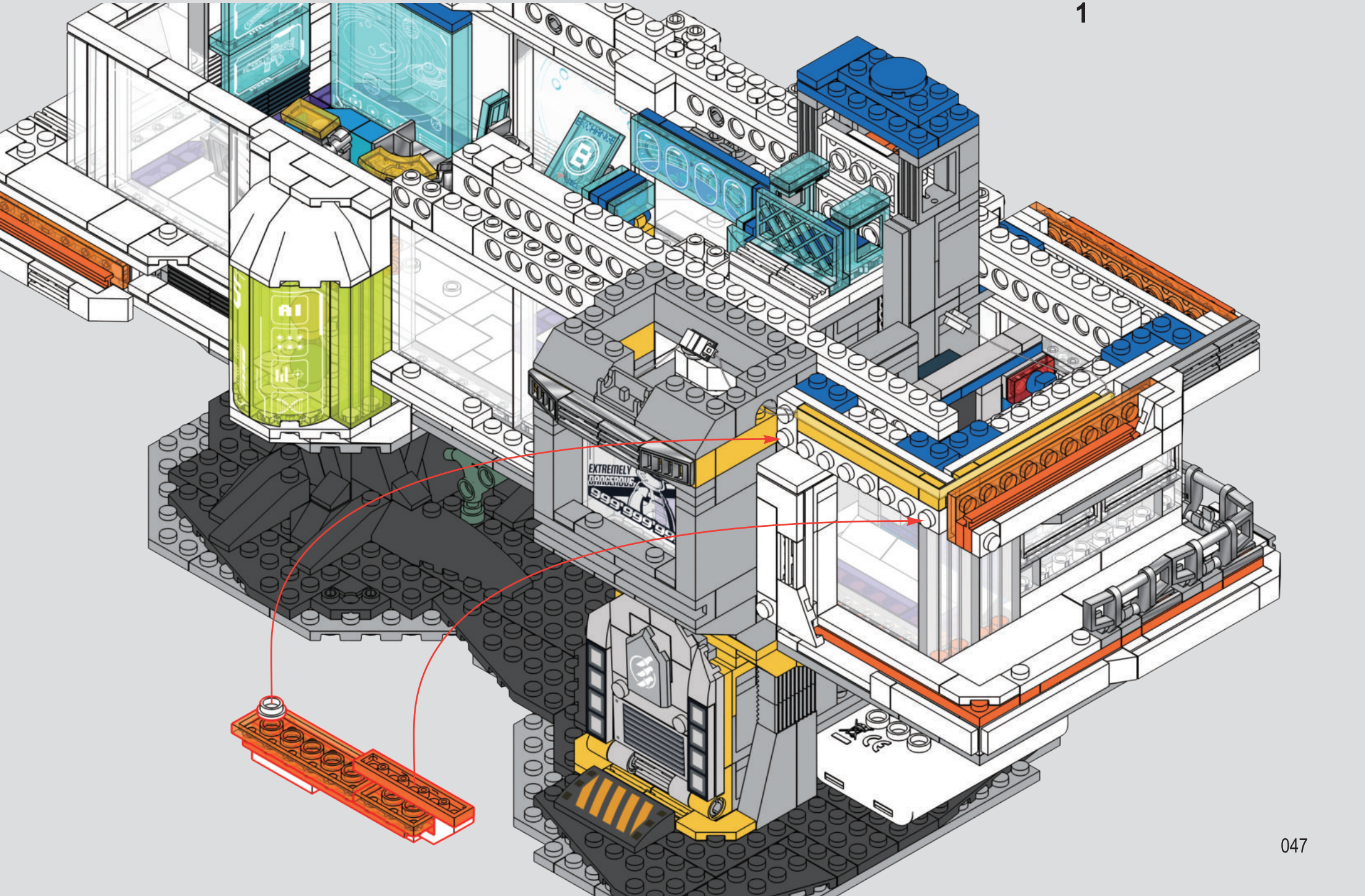

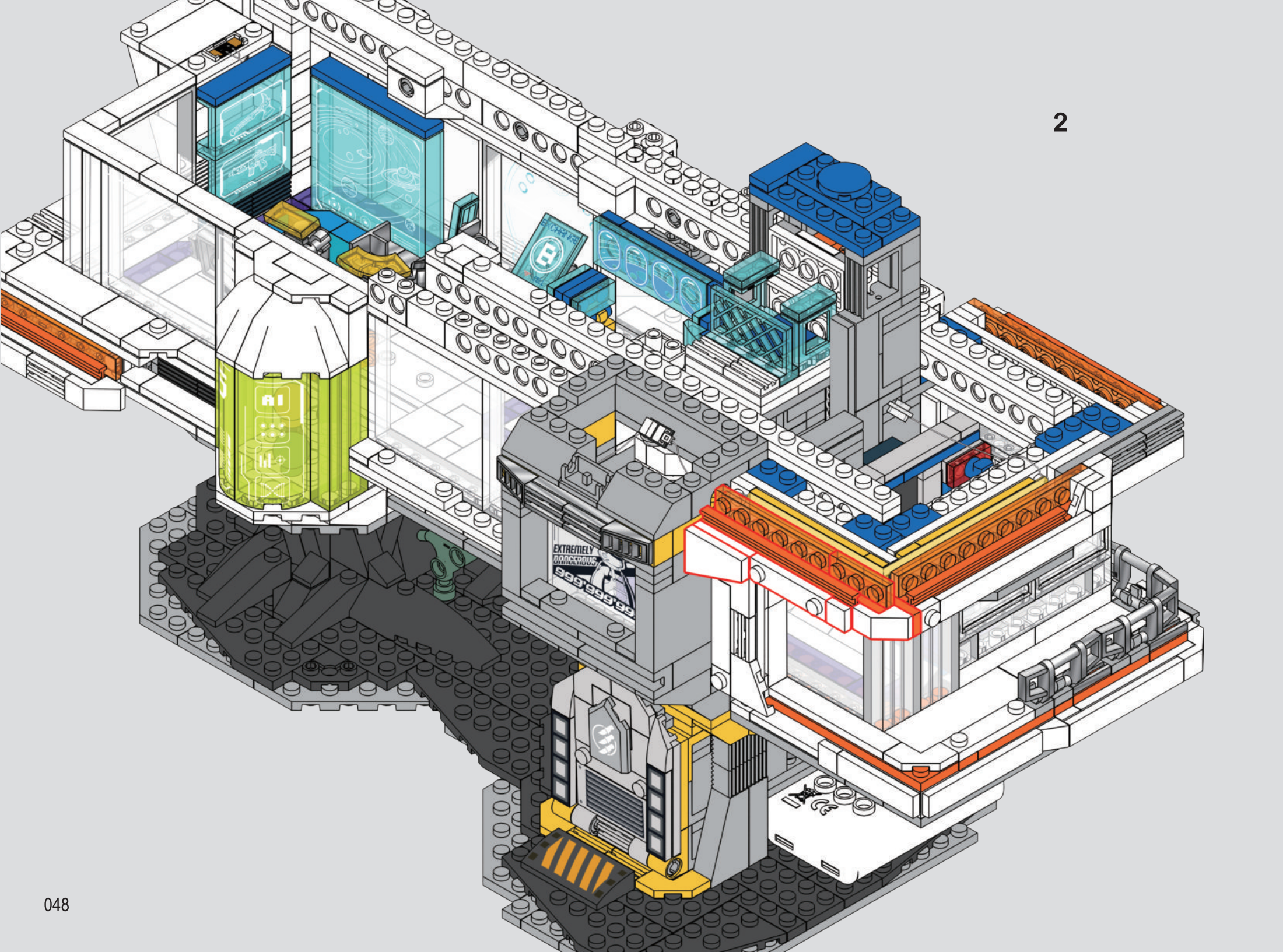
2
AI
EXTREMELY
DANGEROUS
999999999

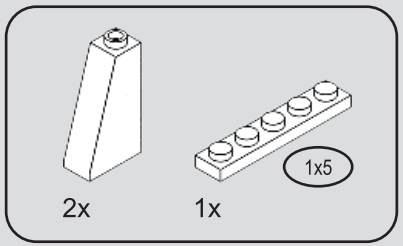

59

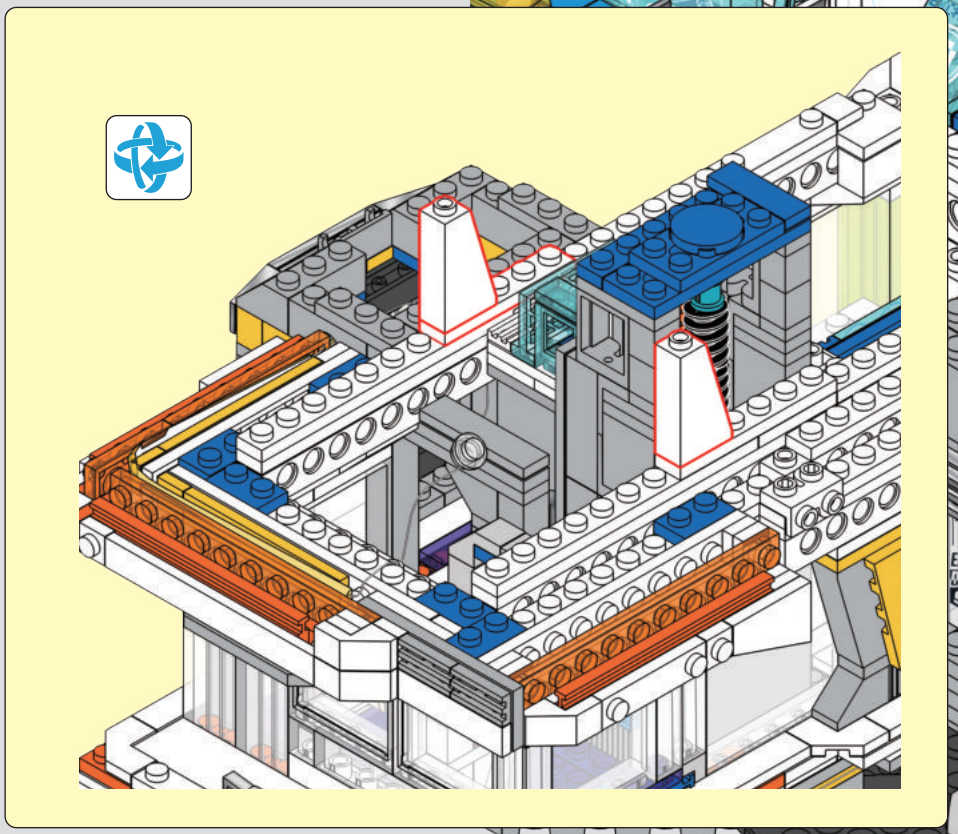

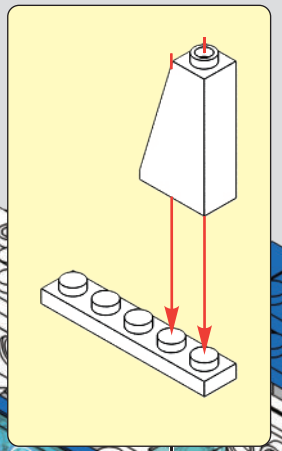

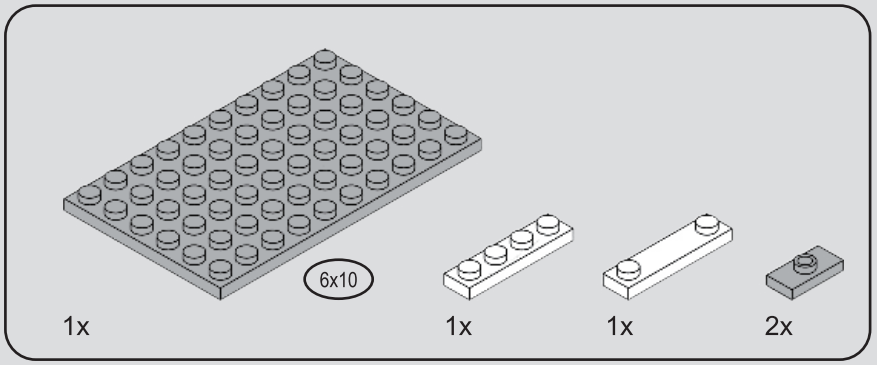

60

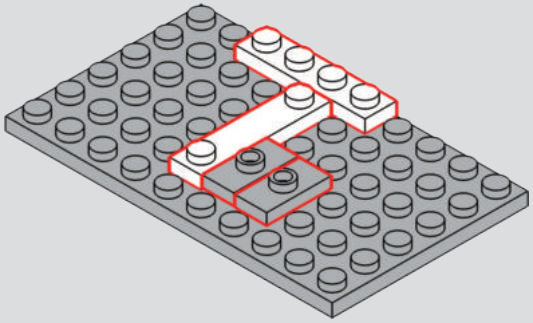

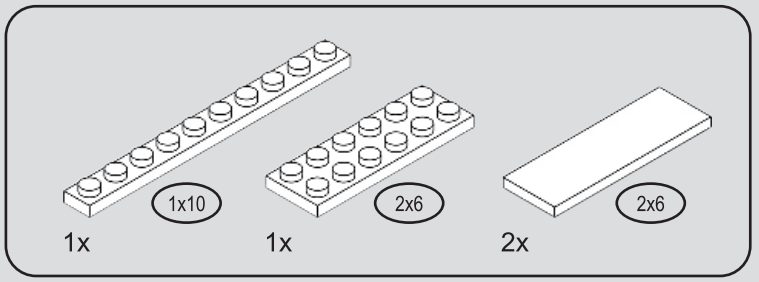

61

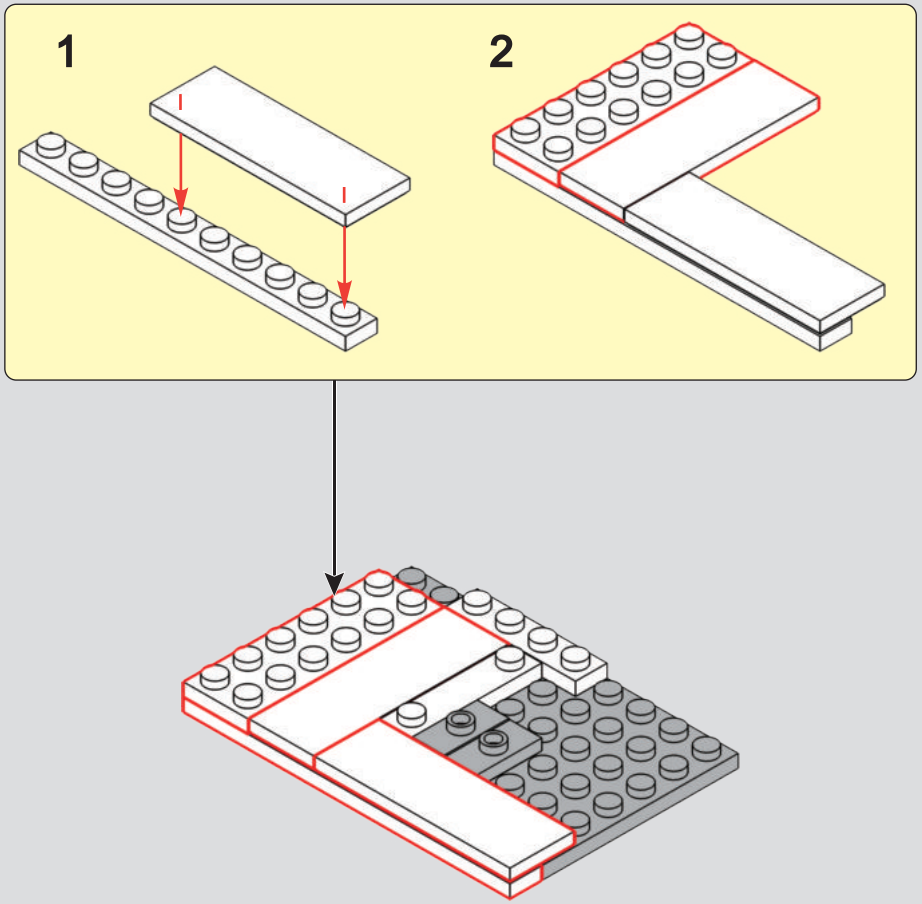

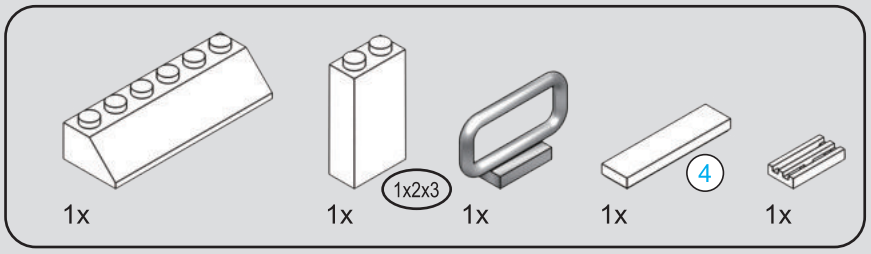

62

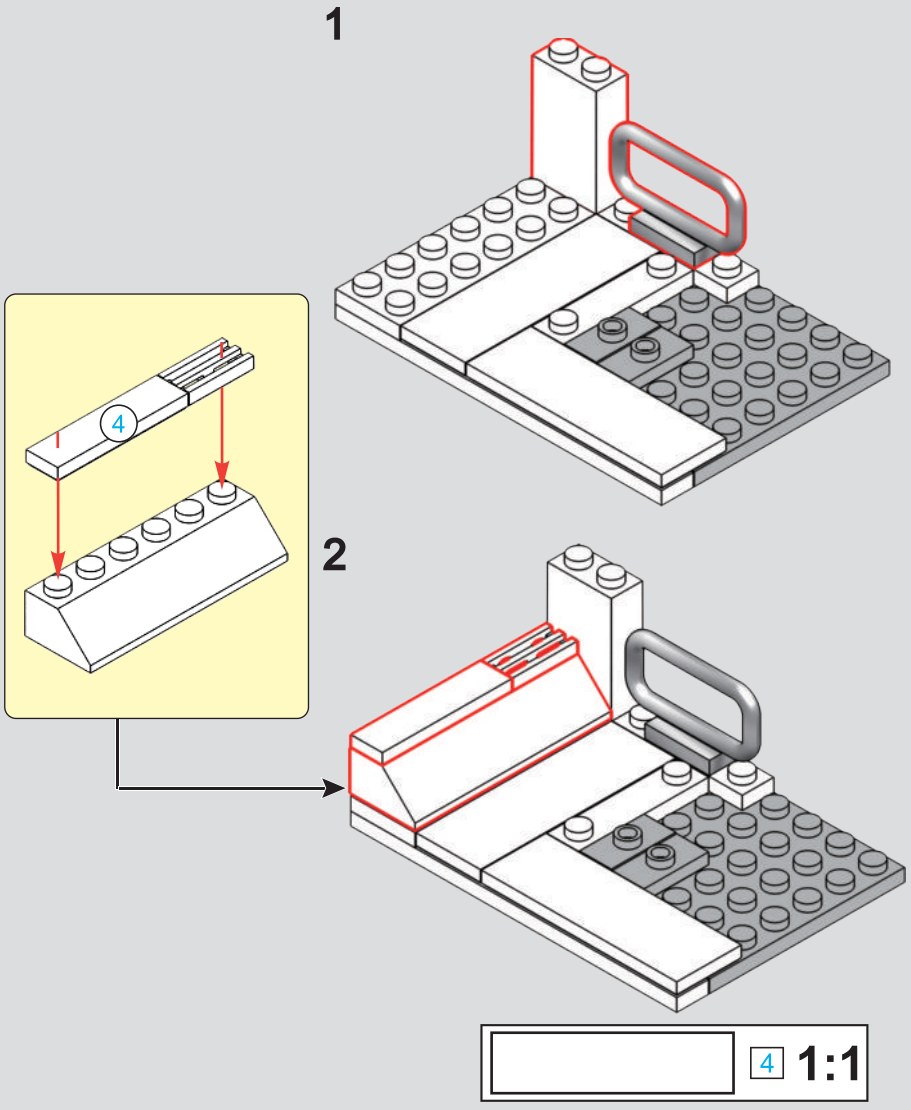

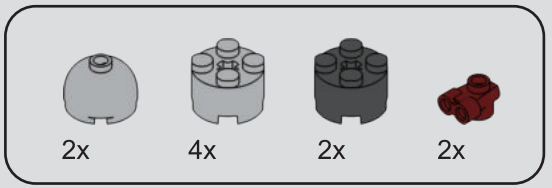

63

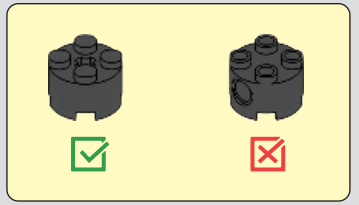

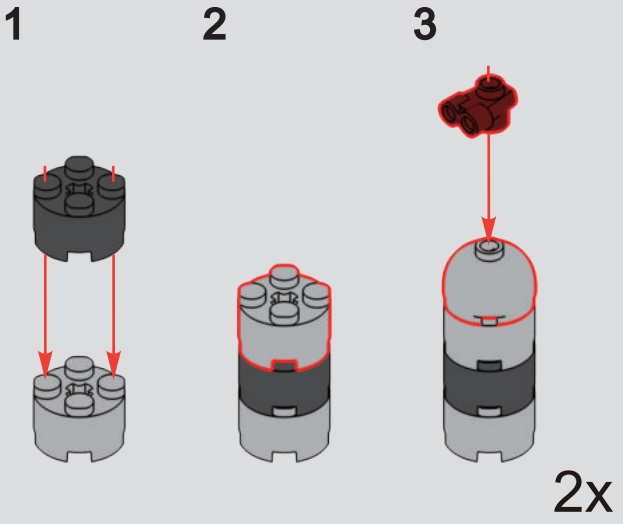

64

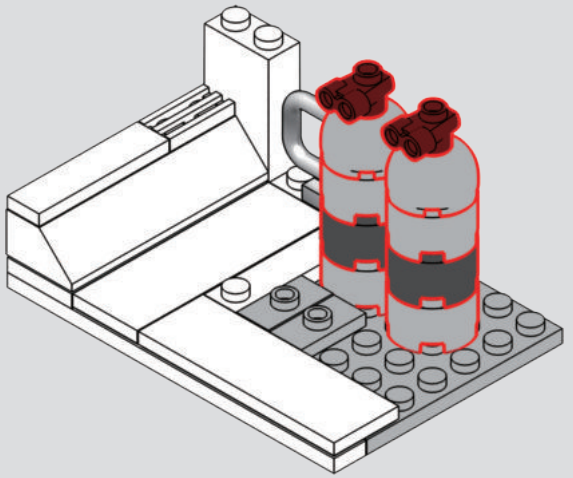

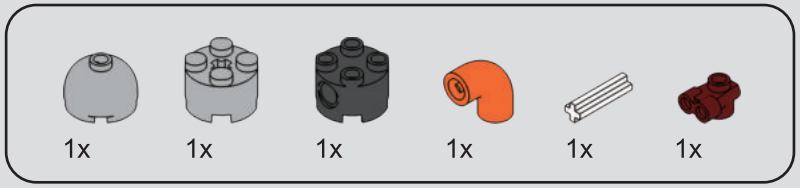

65

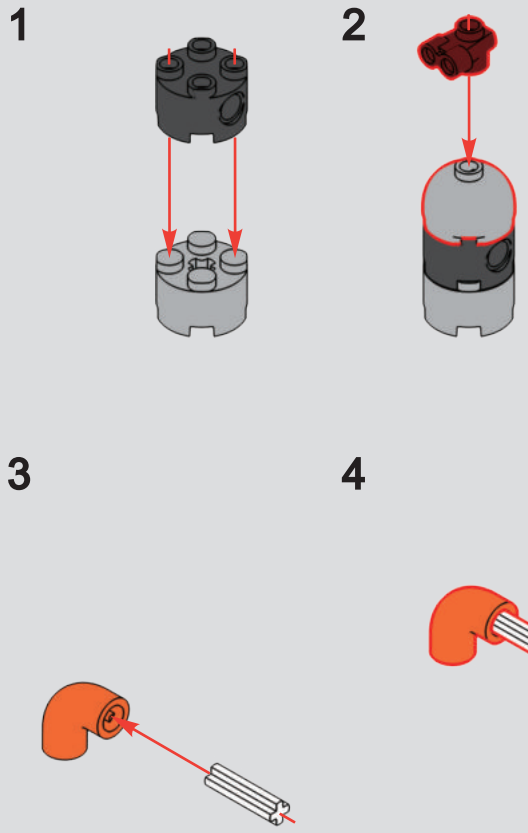

66

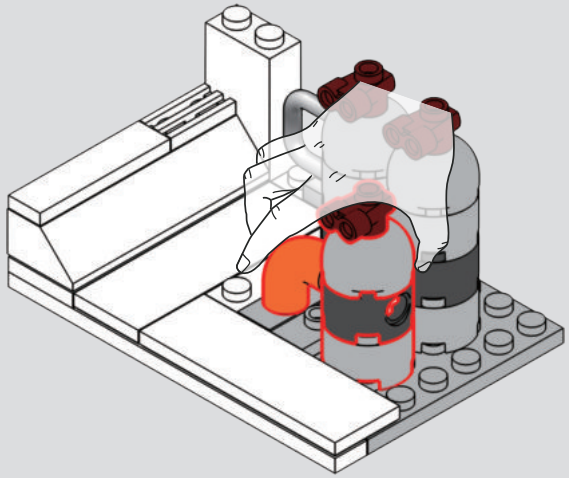

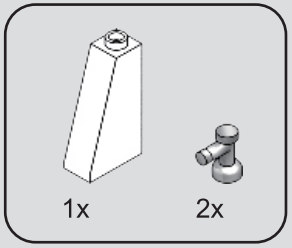

67

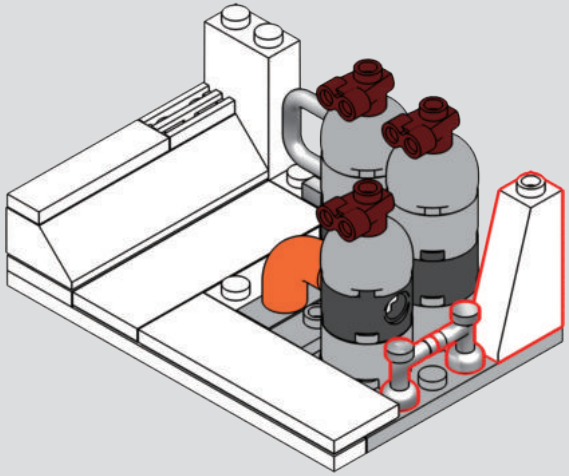

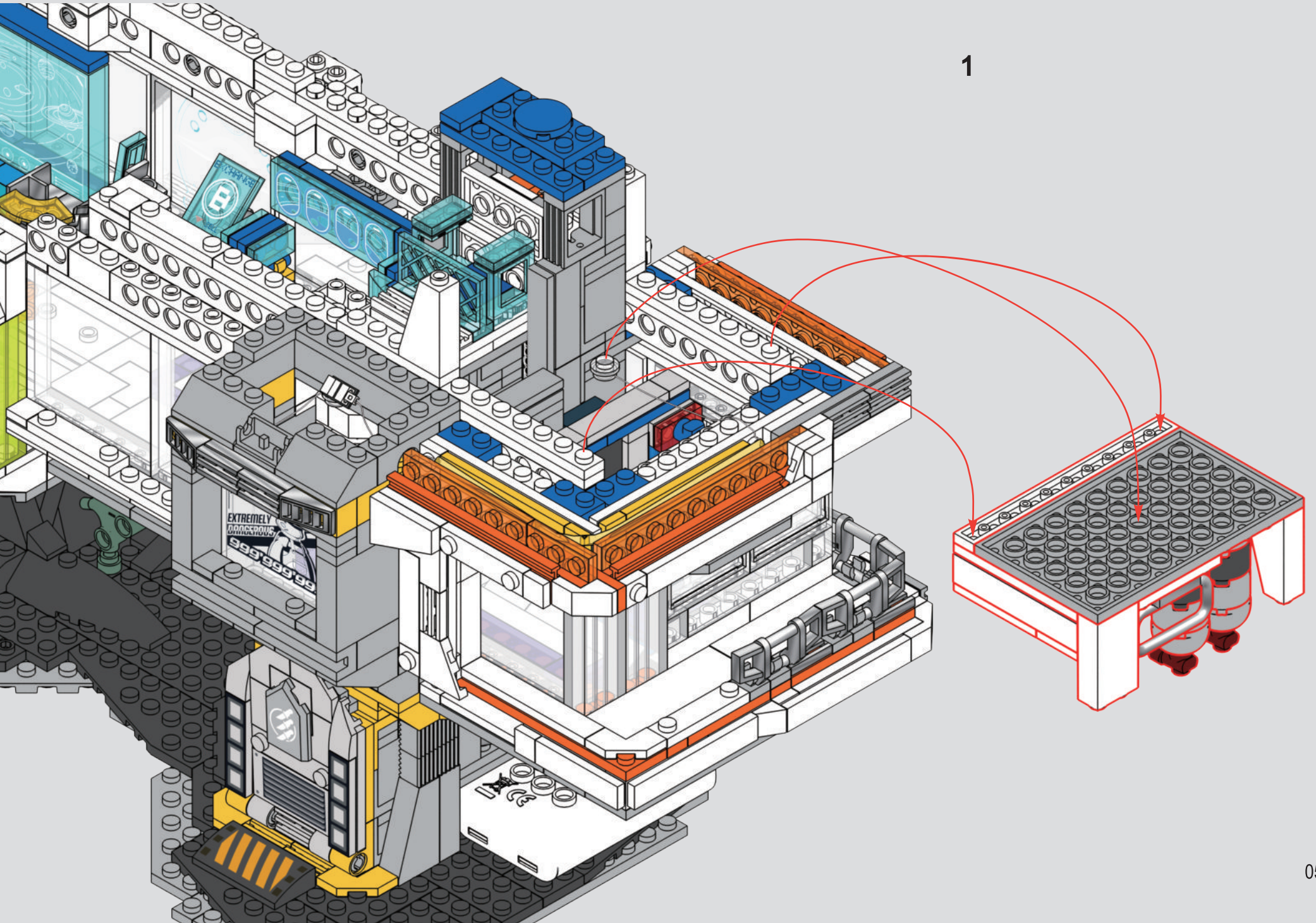
1
EXTREMELY
999'999'99

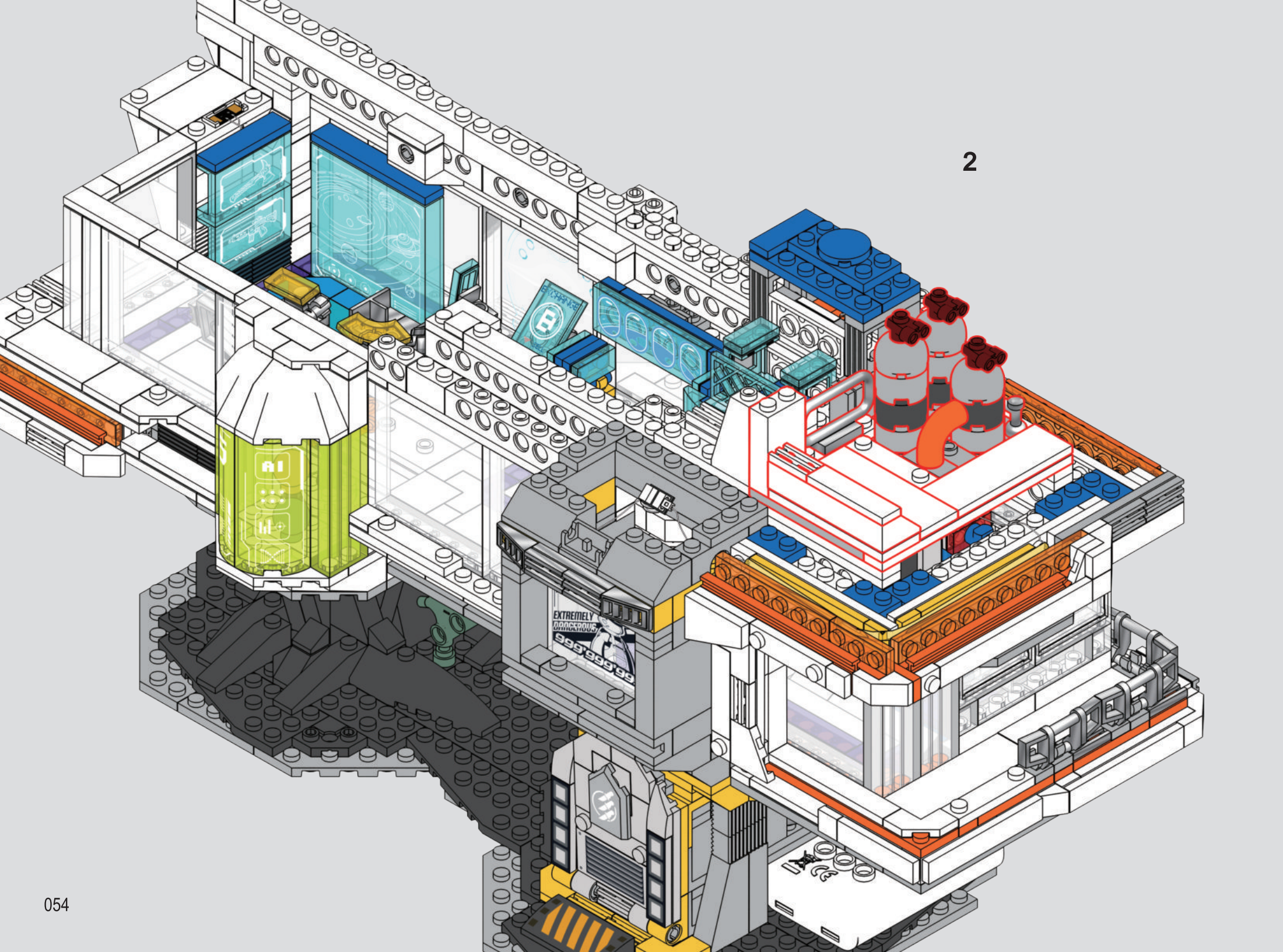
2
AI
EXTREMELY
DANGEROUS
999'999'99

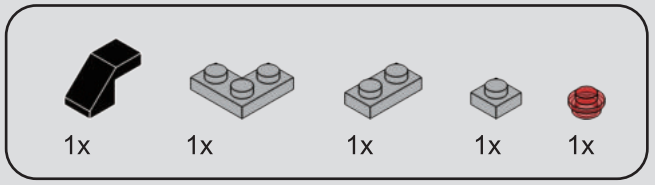

69

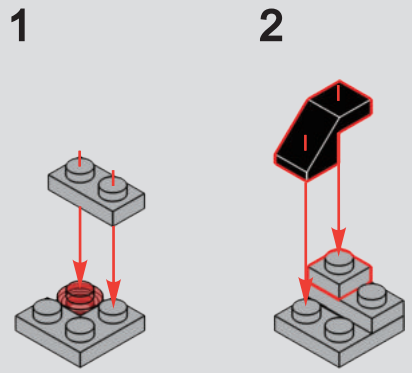

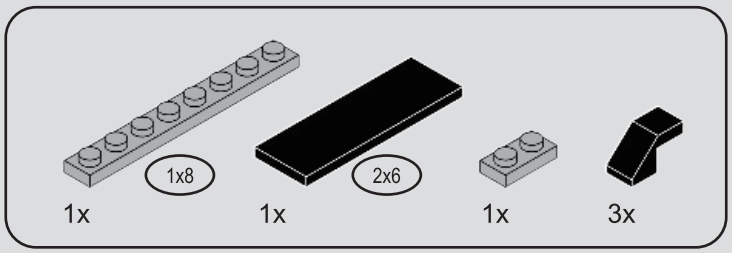

70

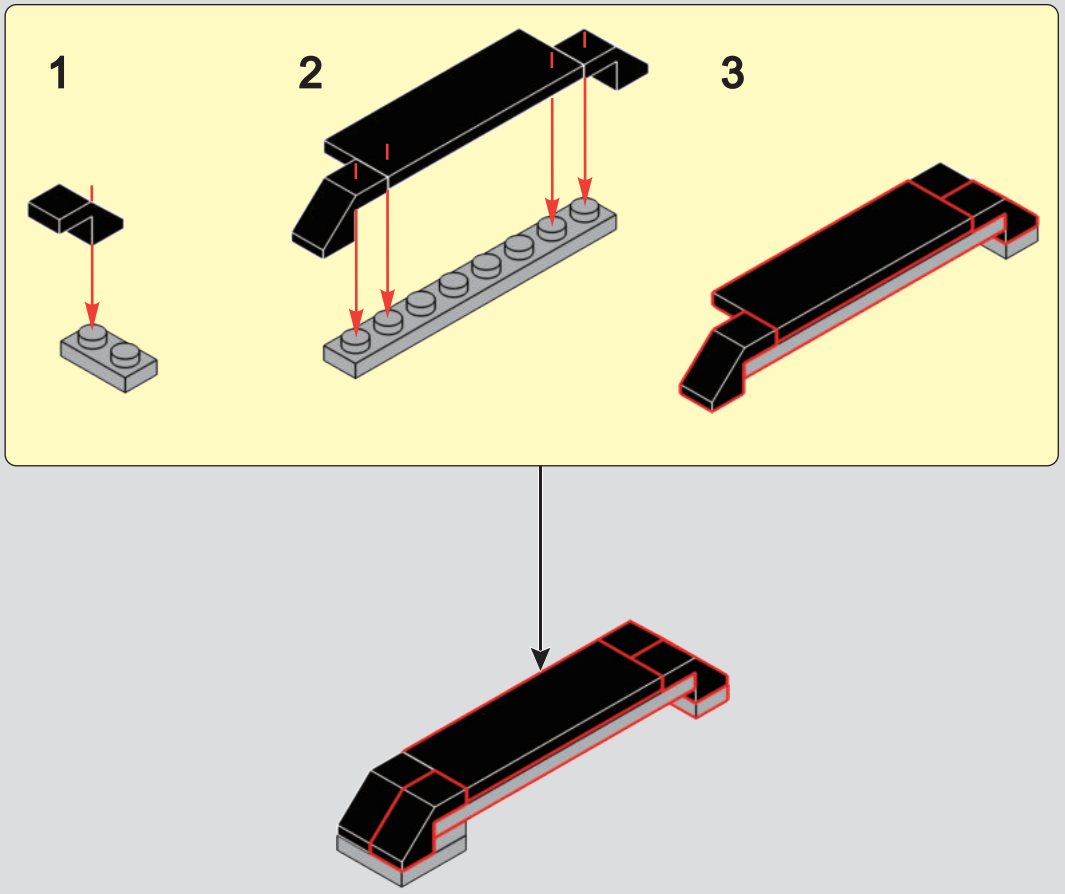

71

1

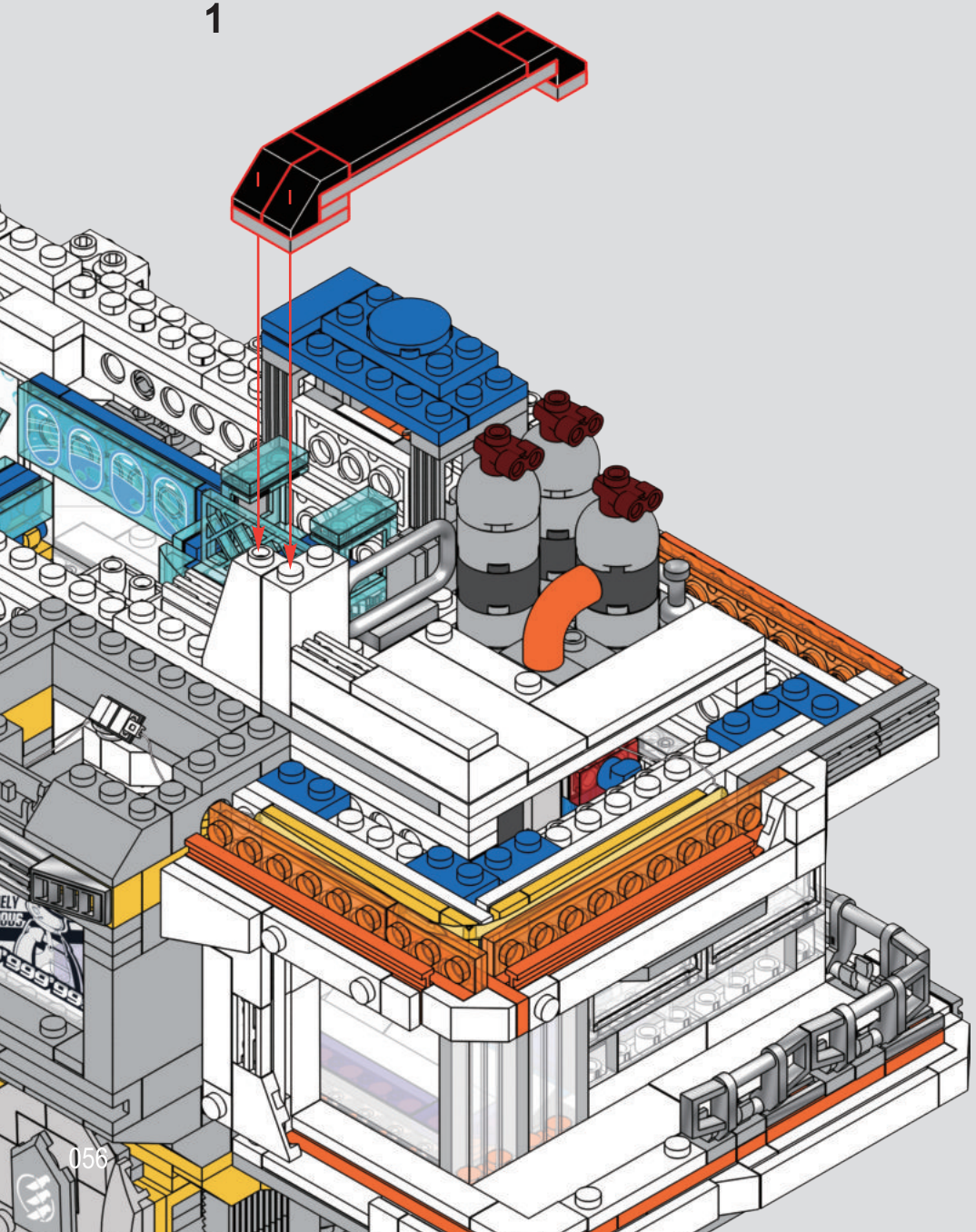

2

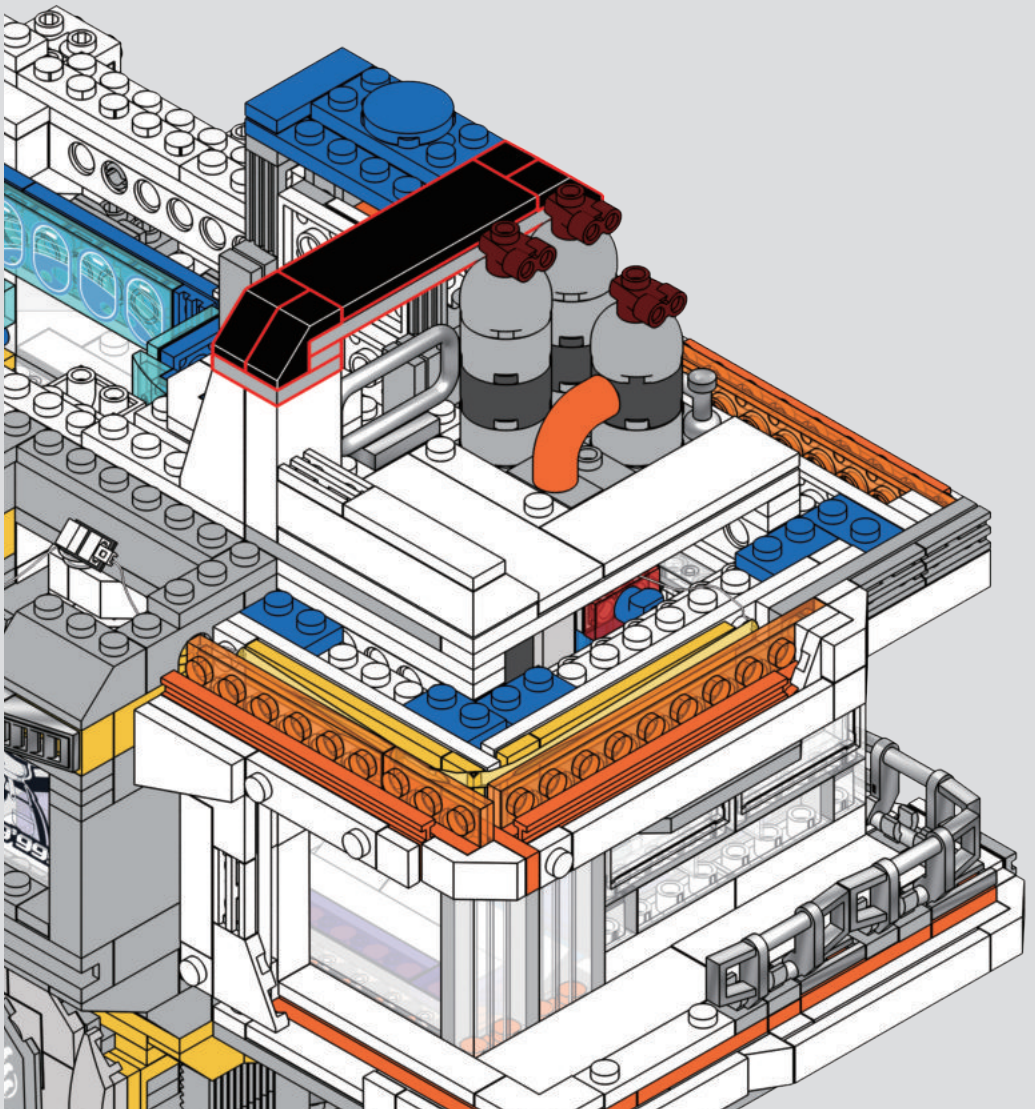

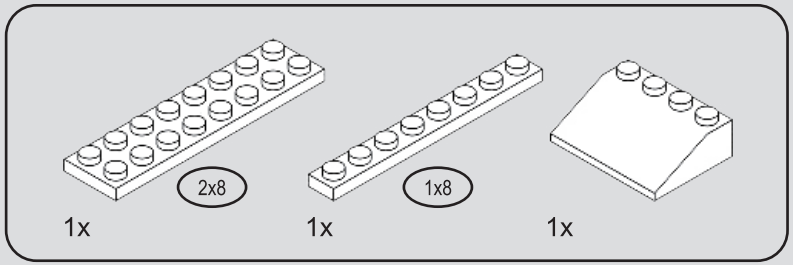

72

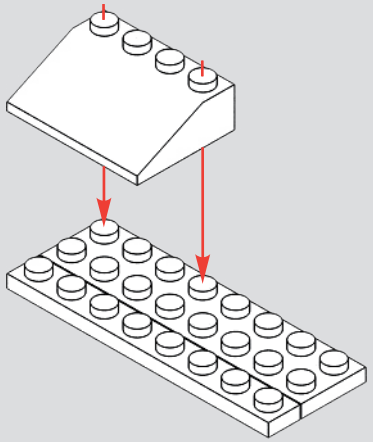

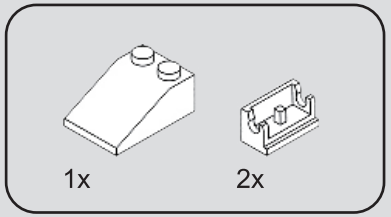

73

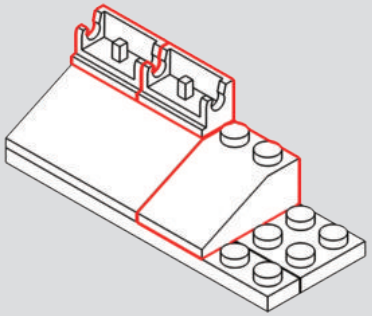

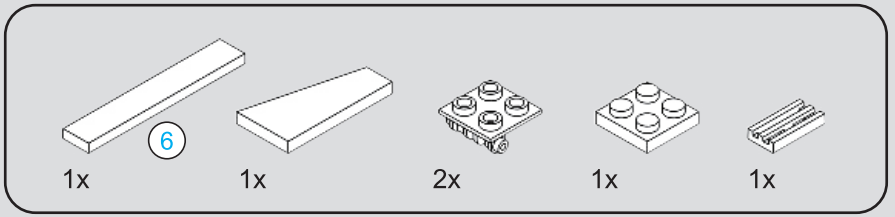

74

1

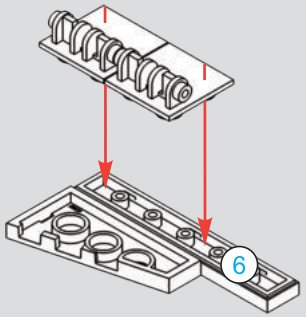

2

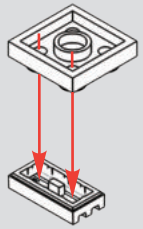

3

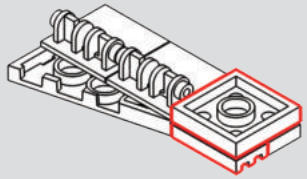

6 **1:1**

75

1

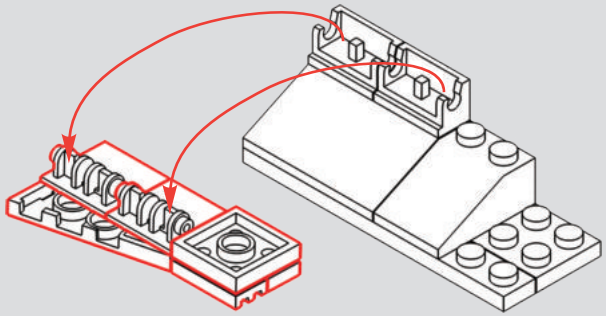

2

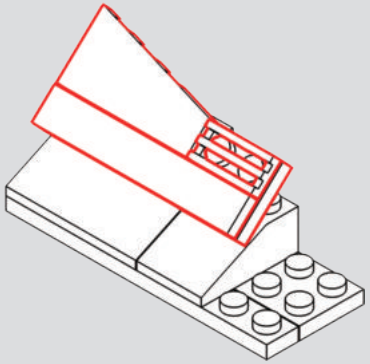

76

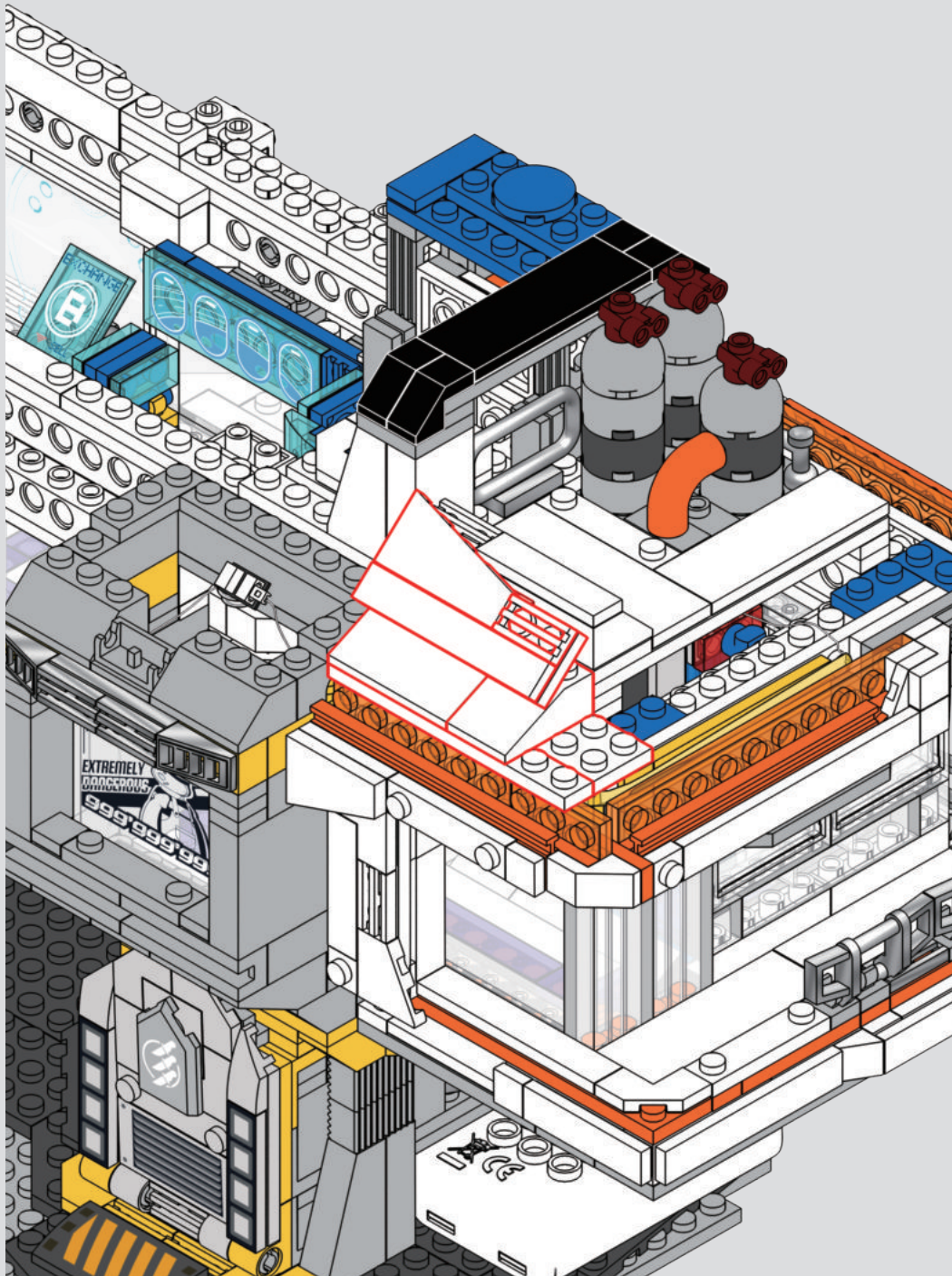

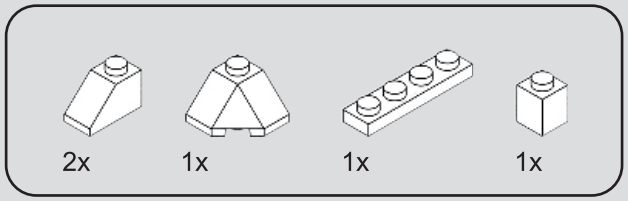

77

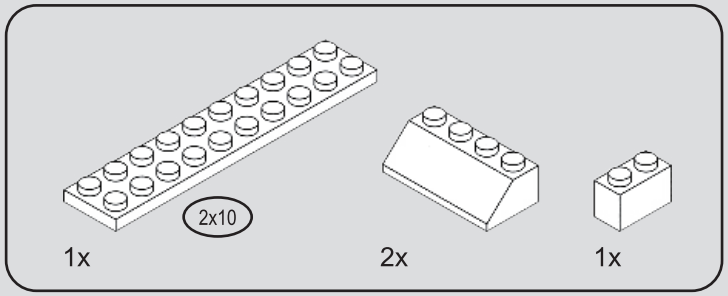

78

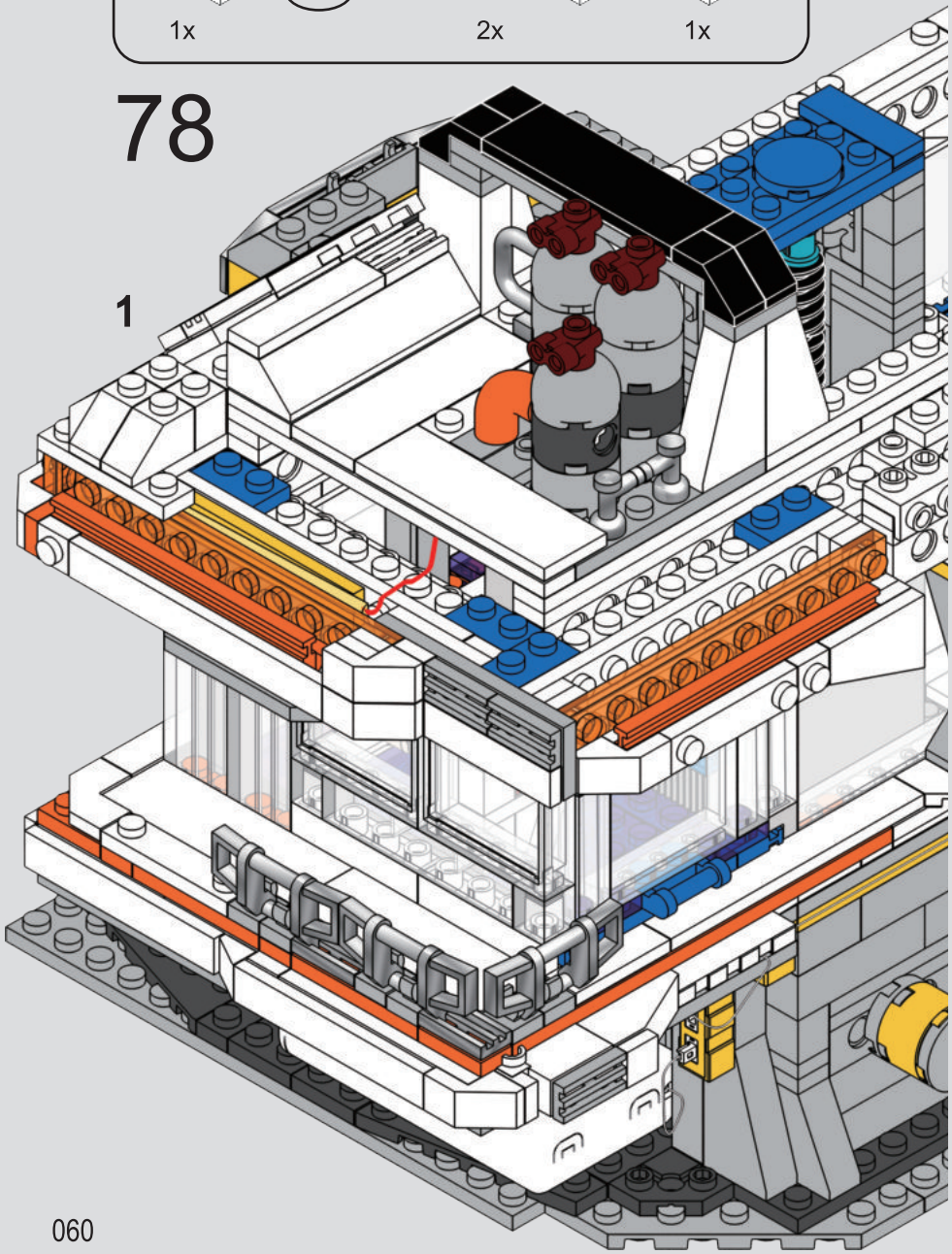

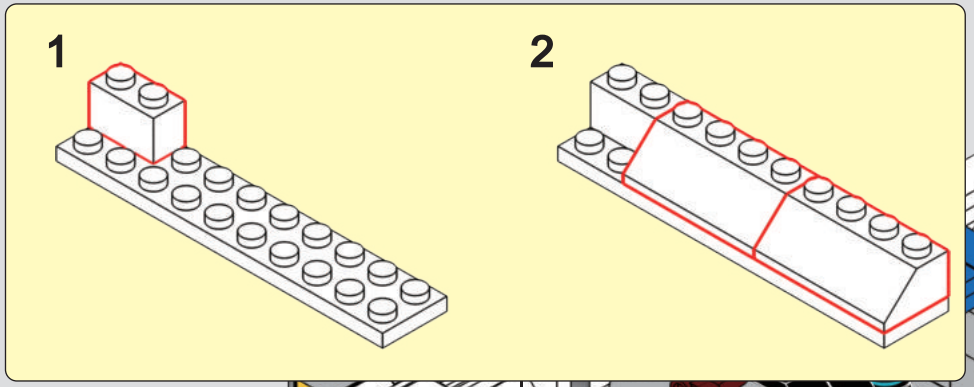

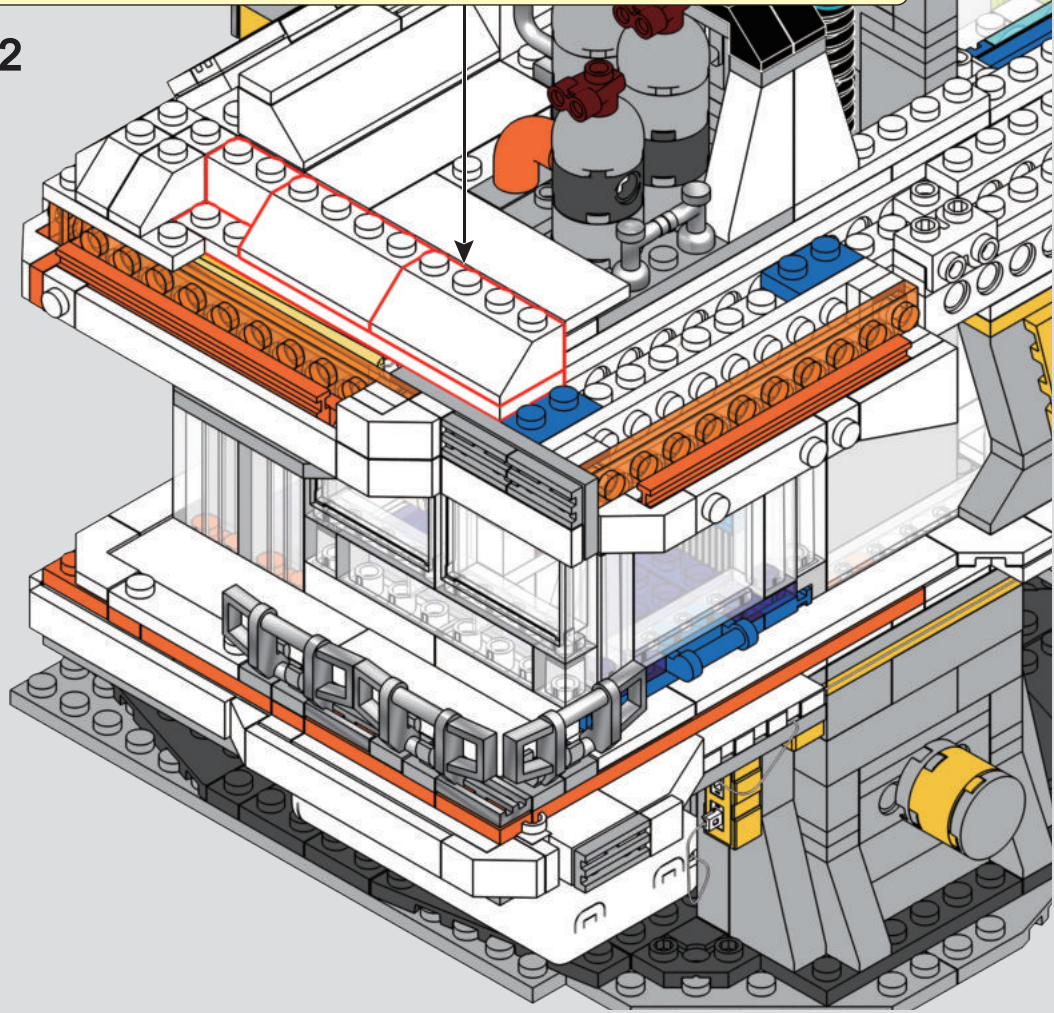

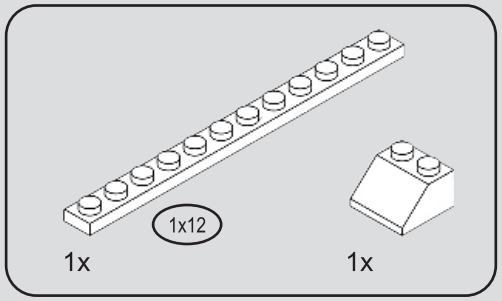

79

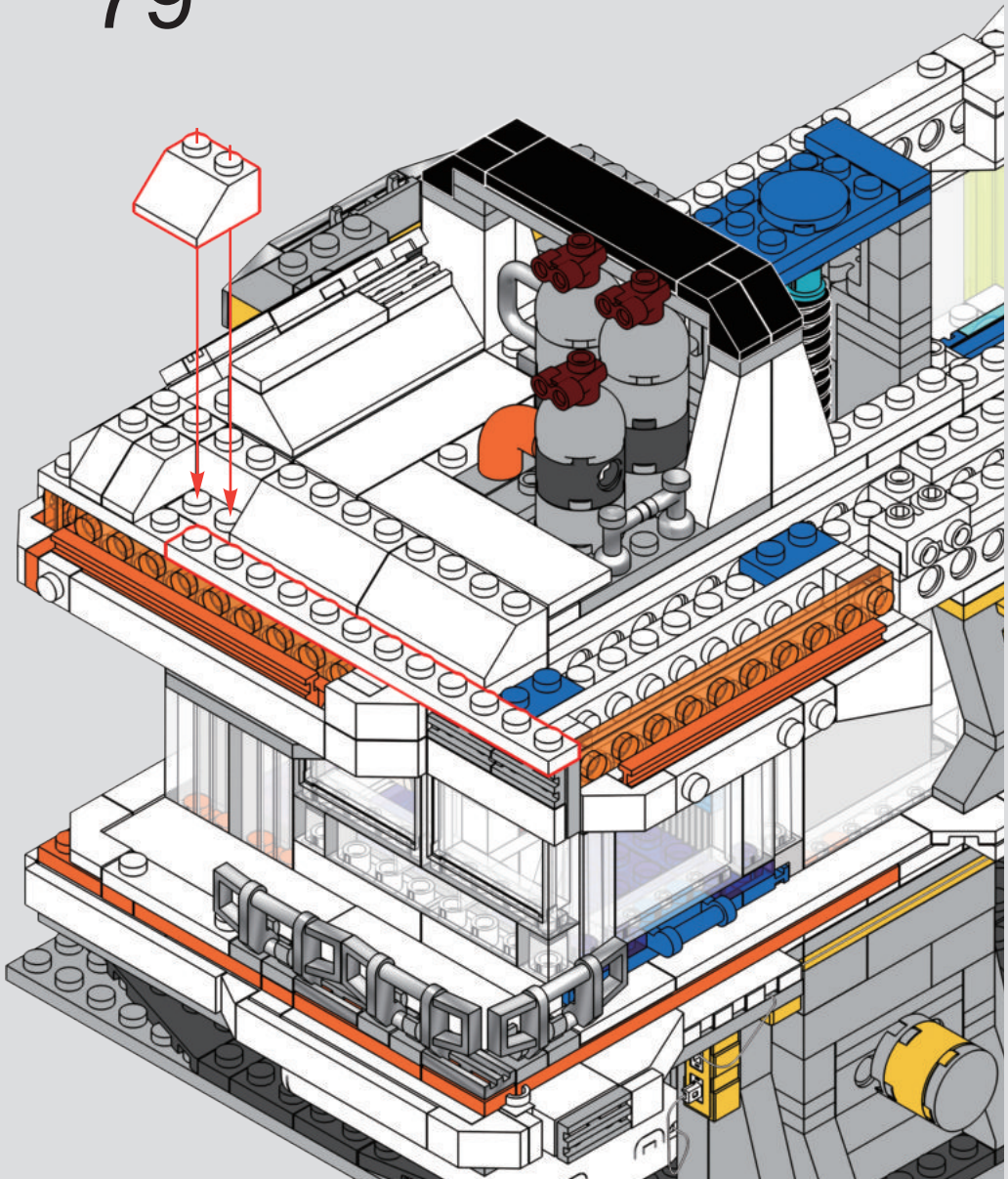

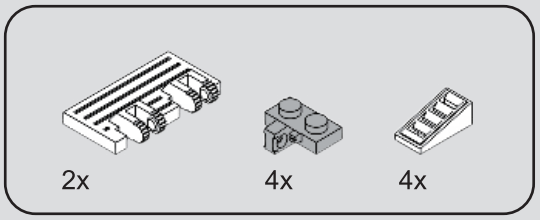

80

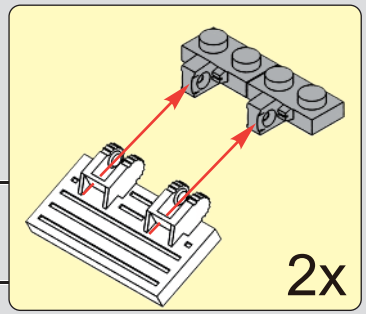

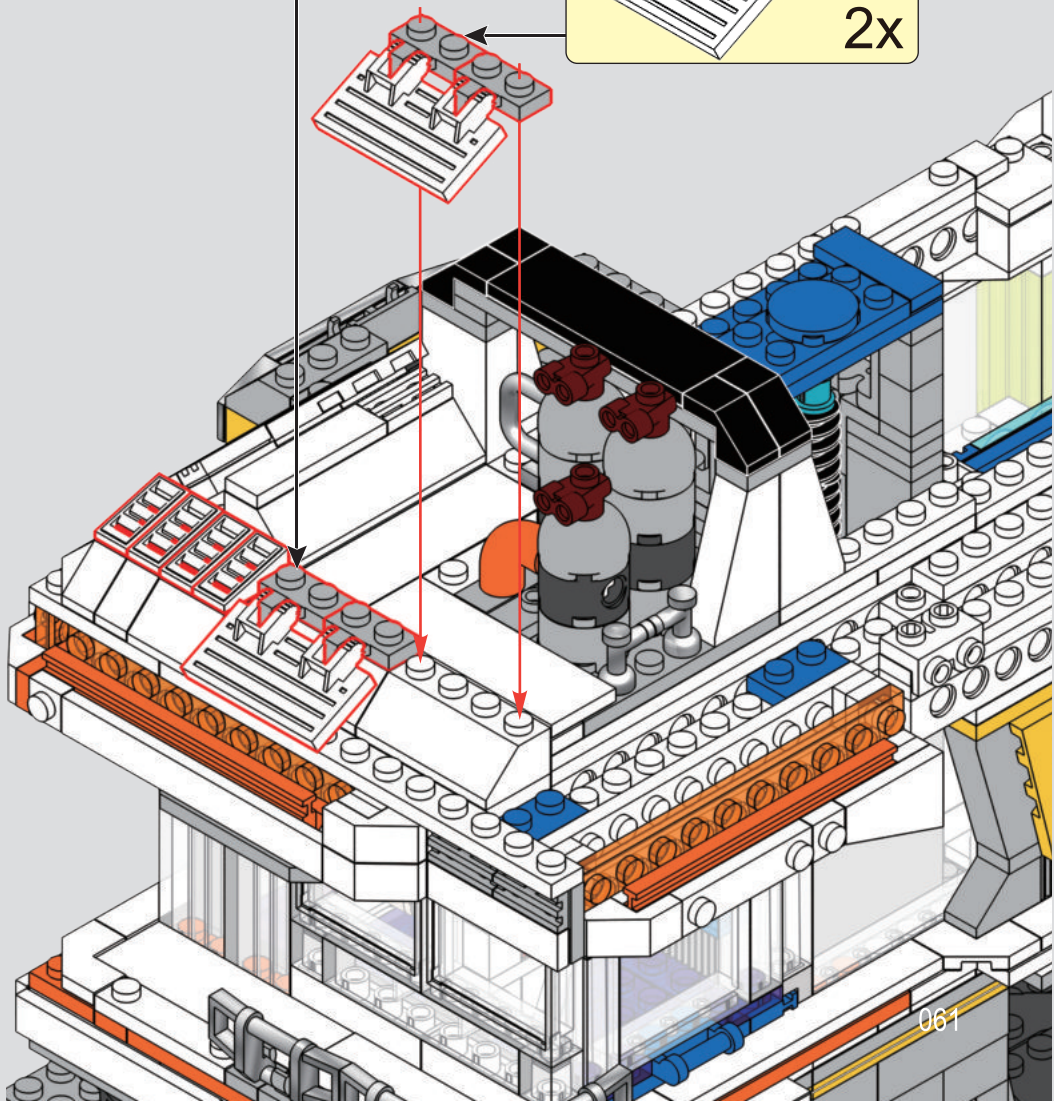

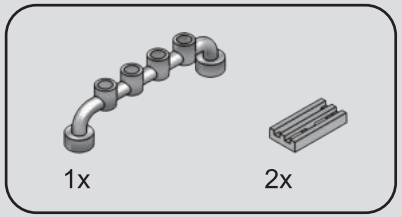

81

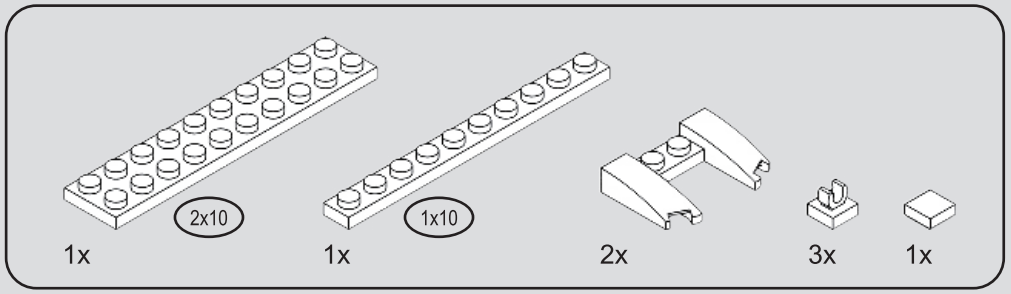

82

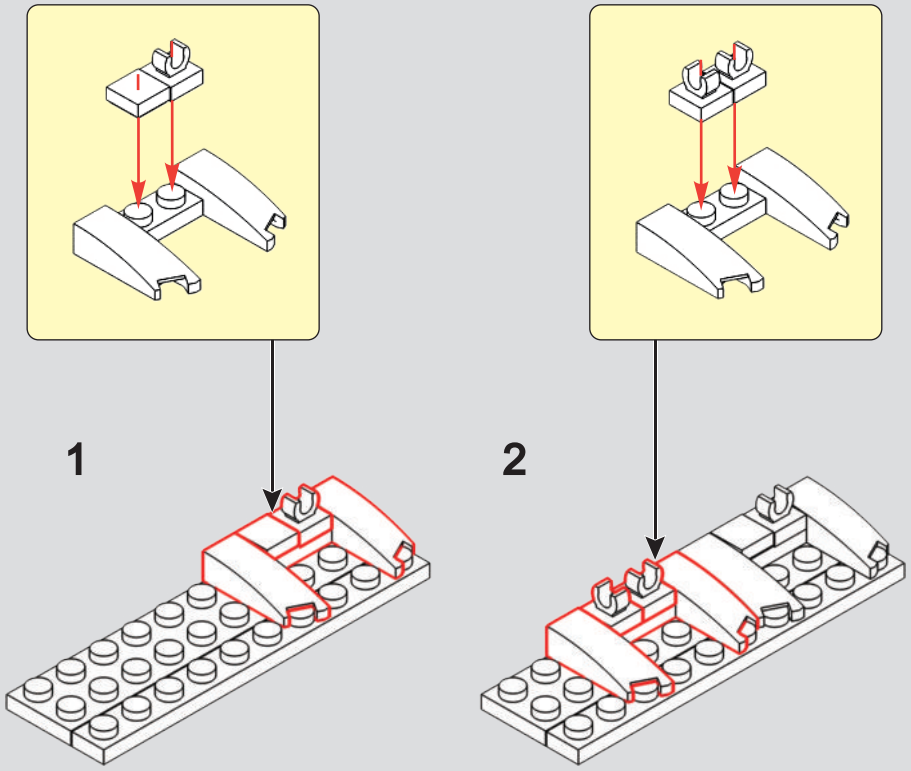

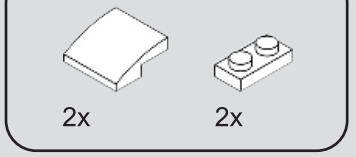

83

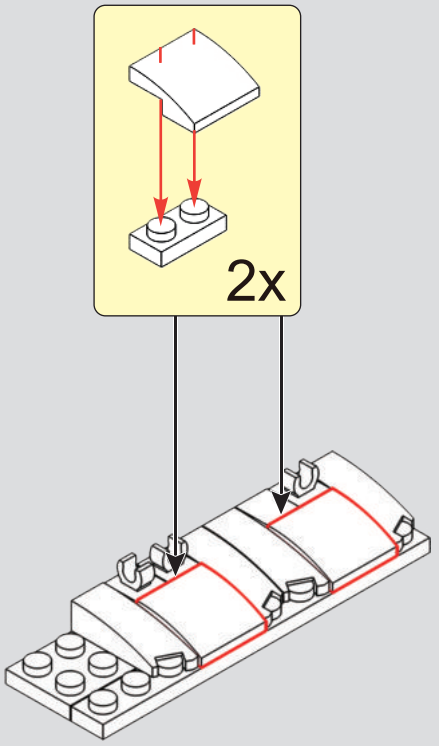

84

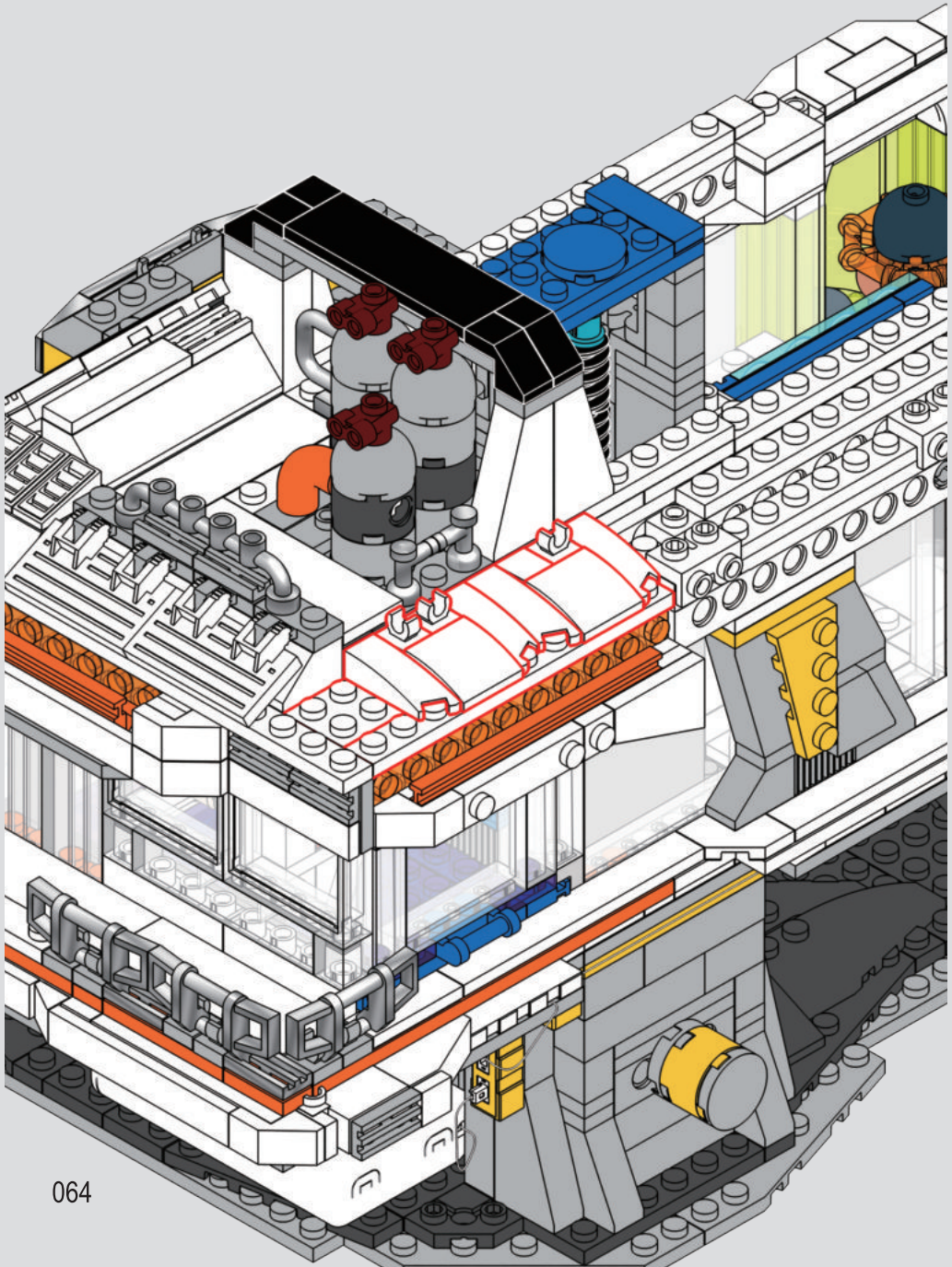

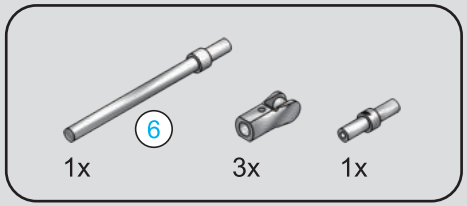

85

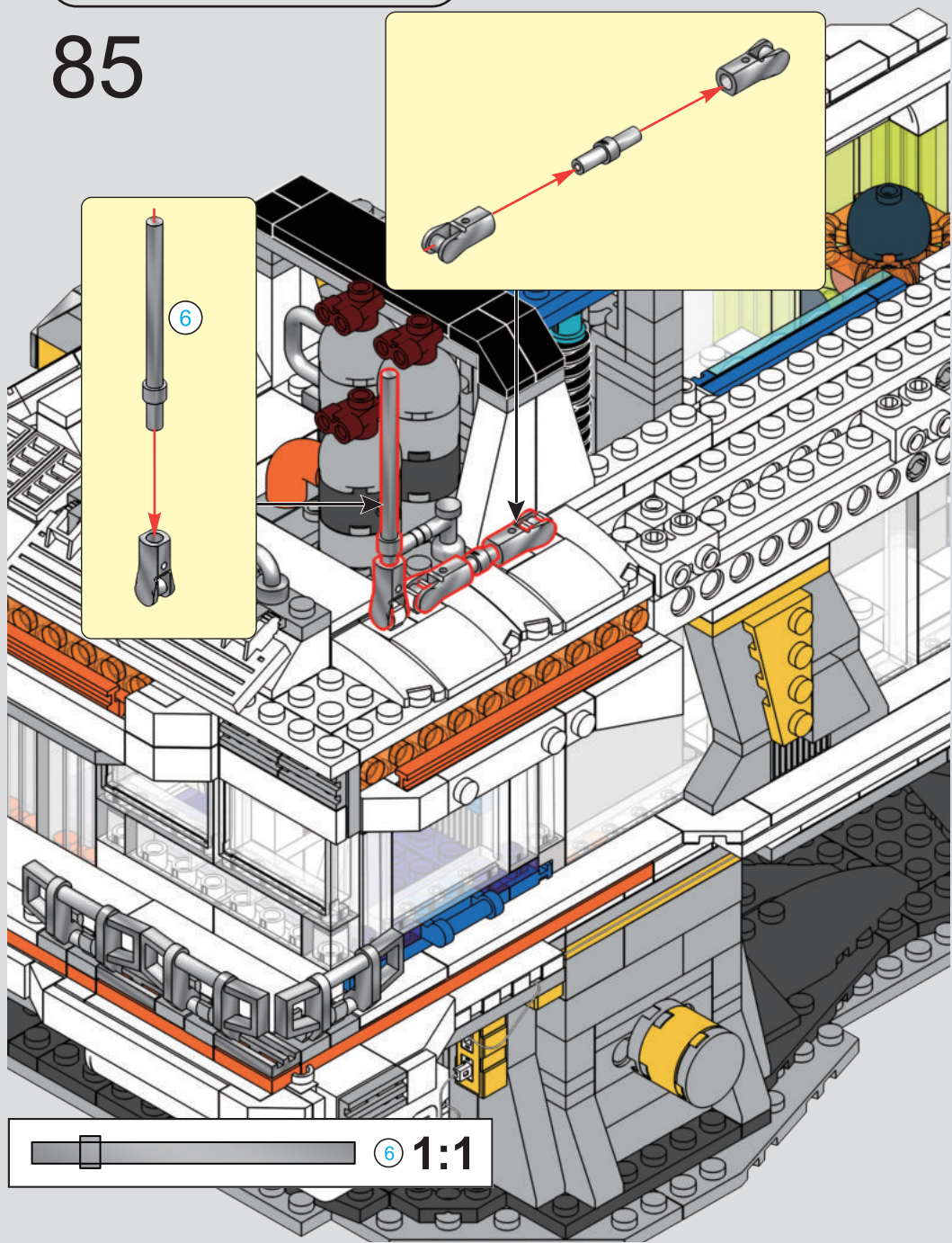

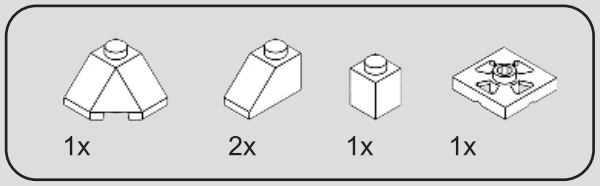

86

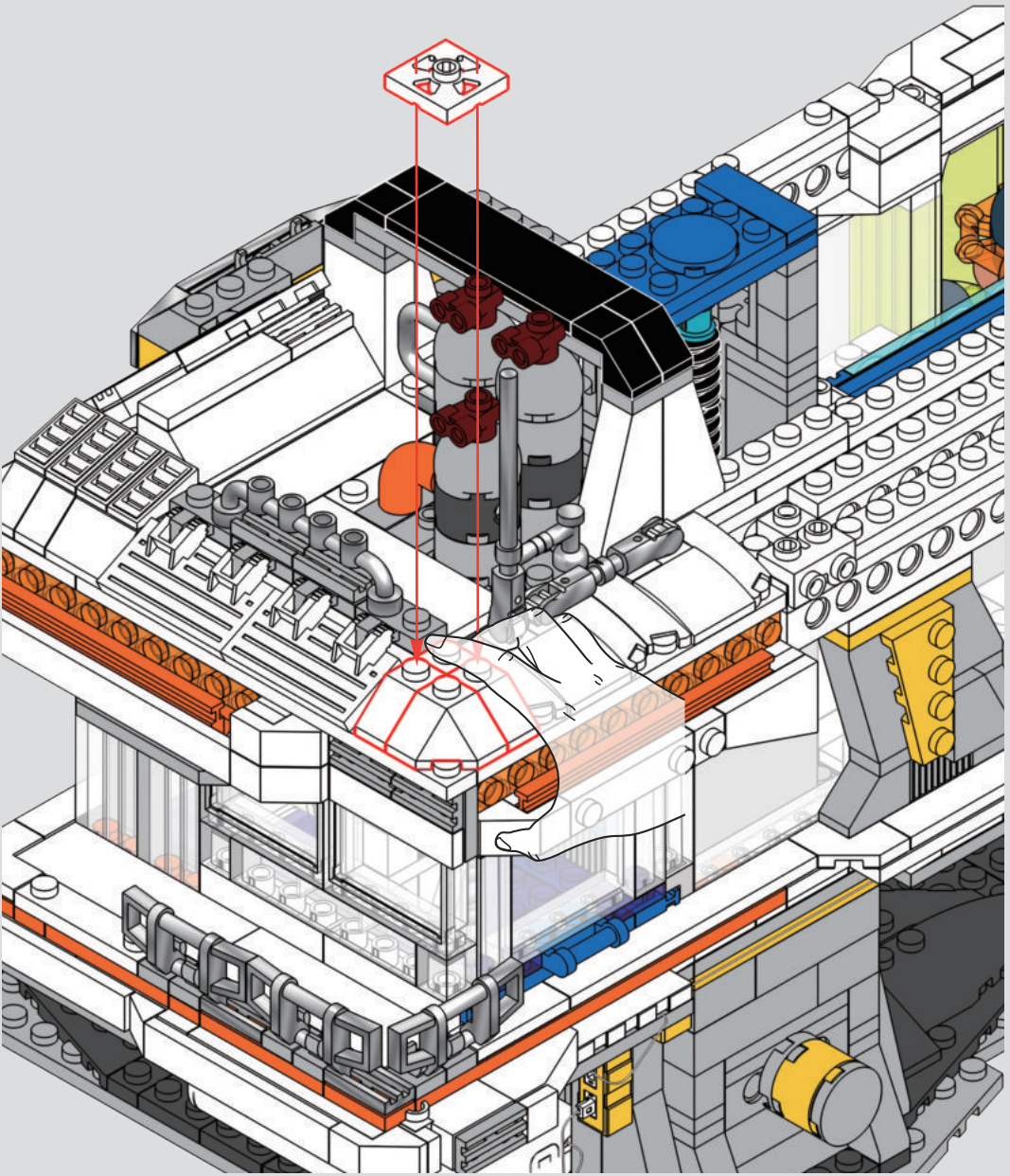

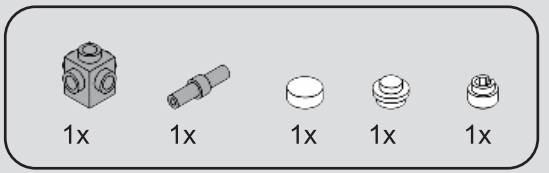

87

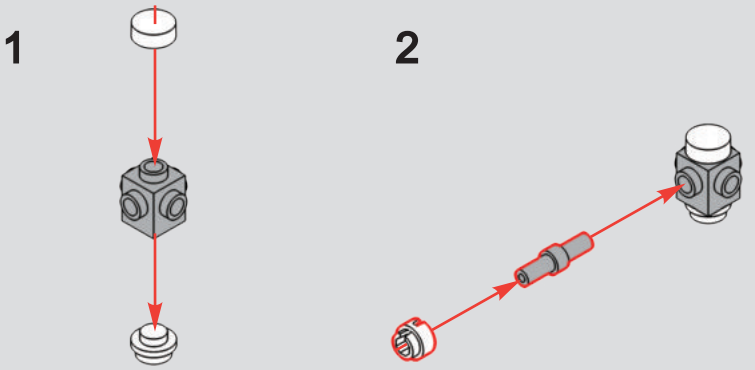

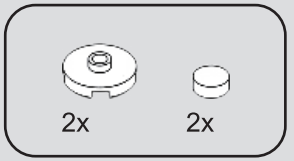

88

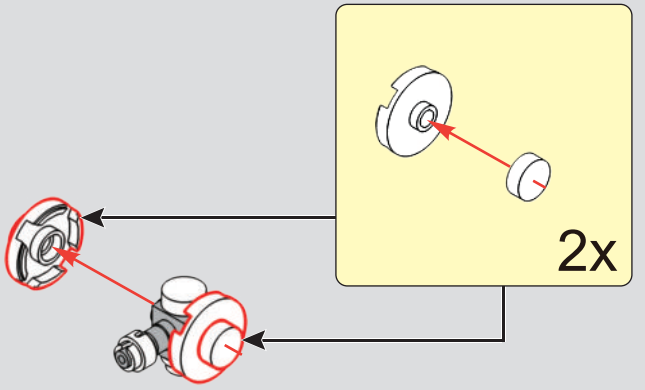

1

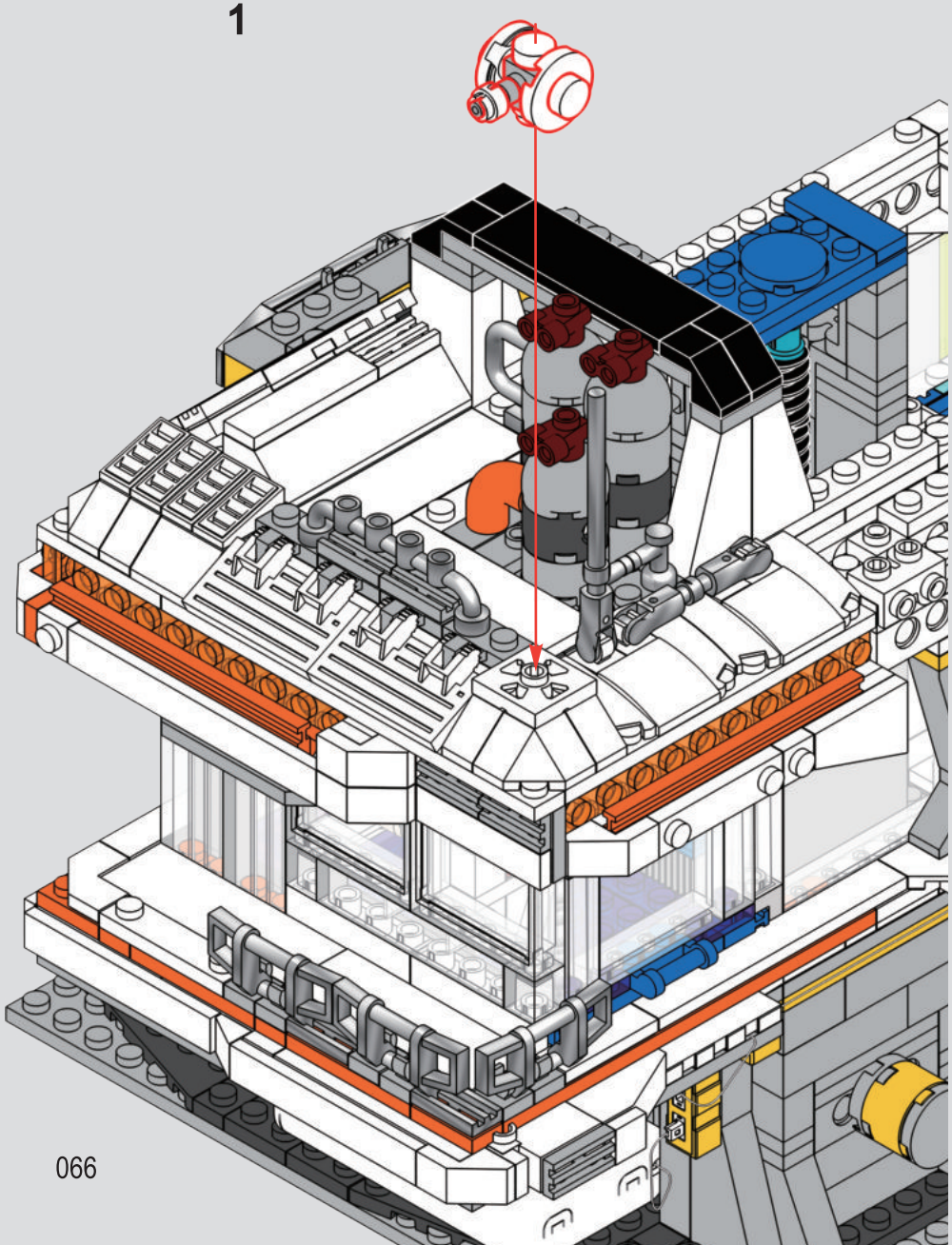

2

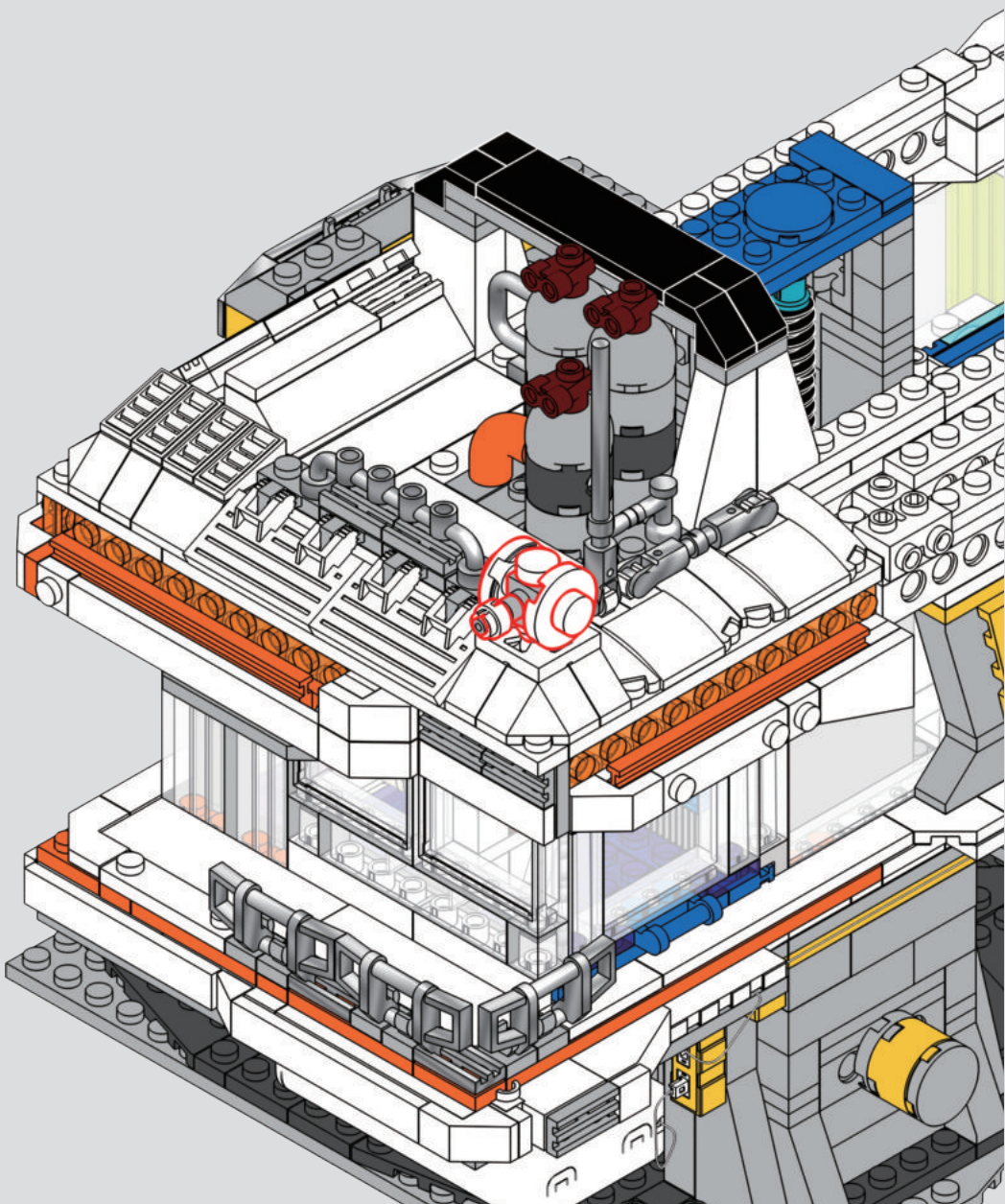


9
F

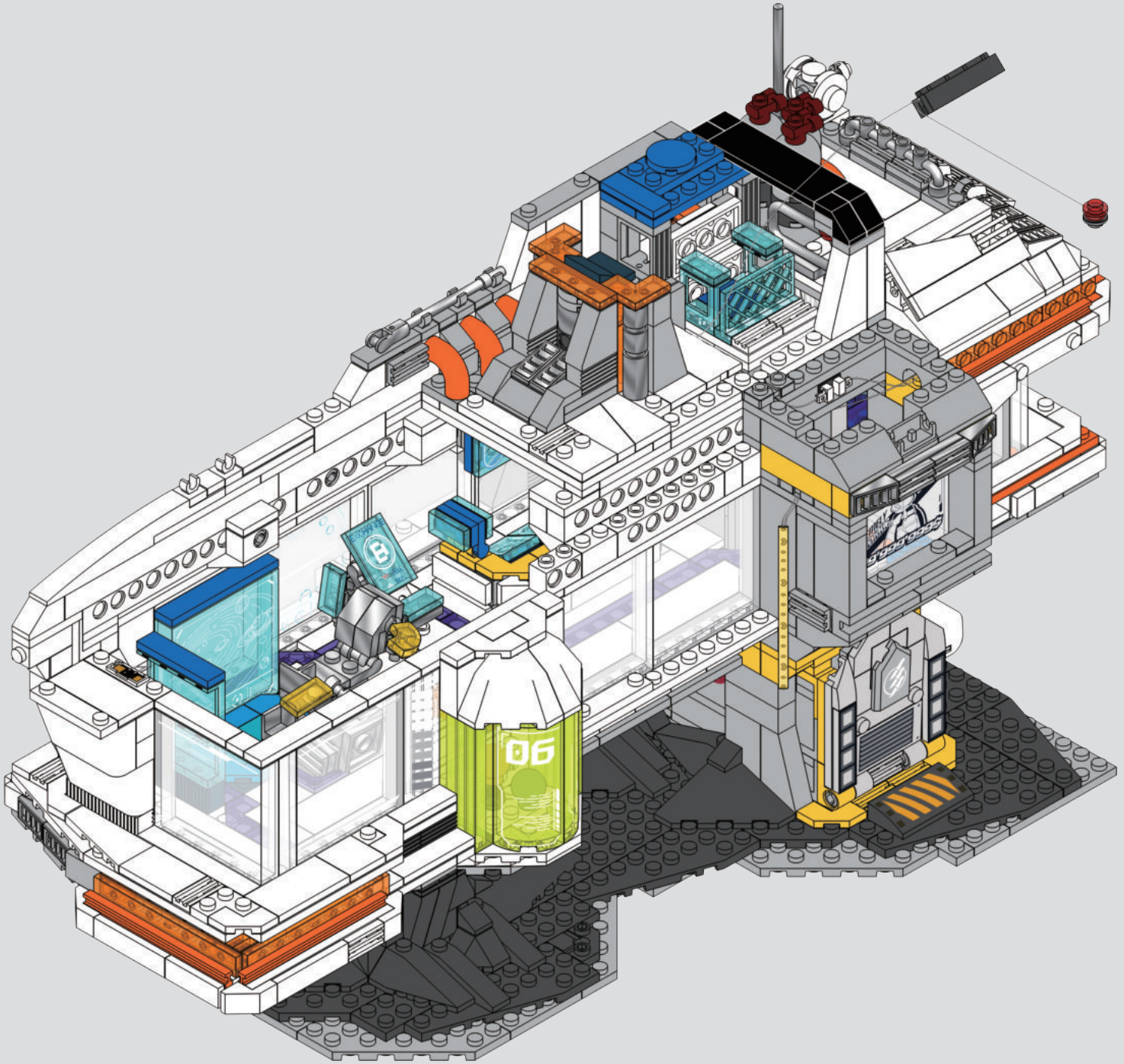

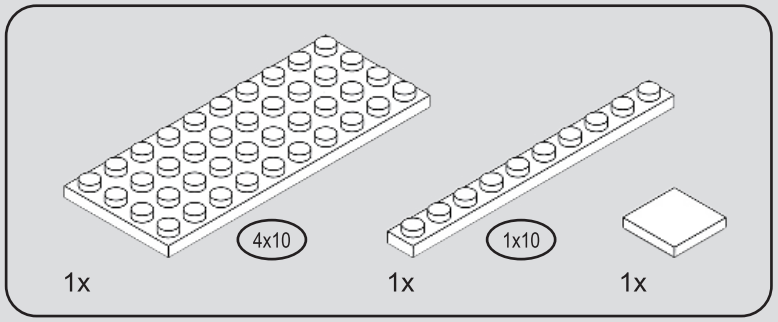

90

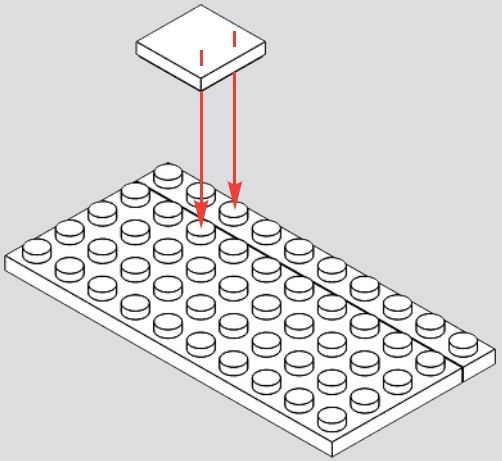

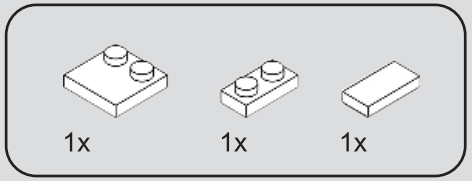

91

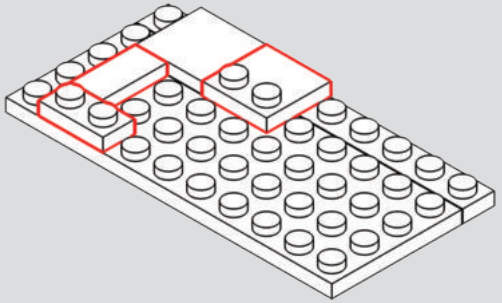

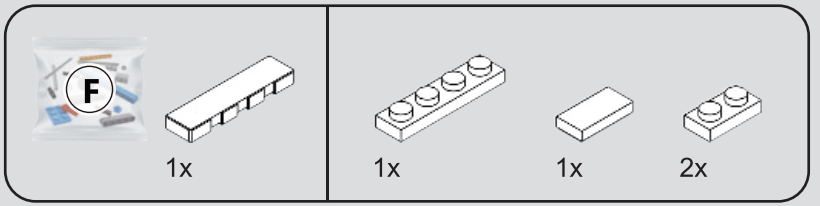

92

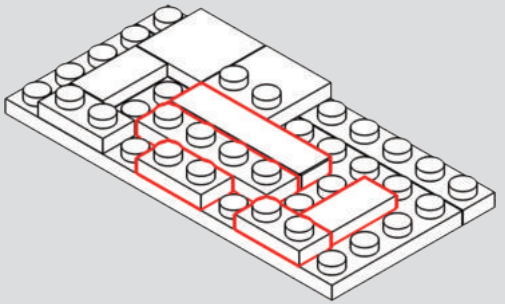

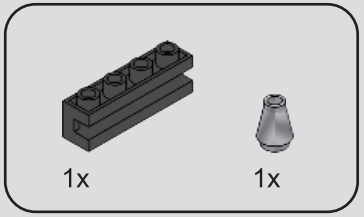

93

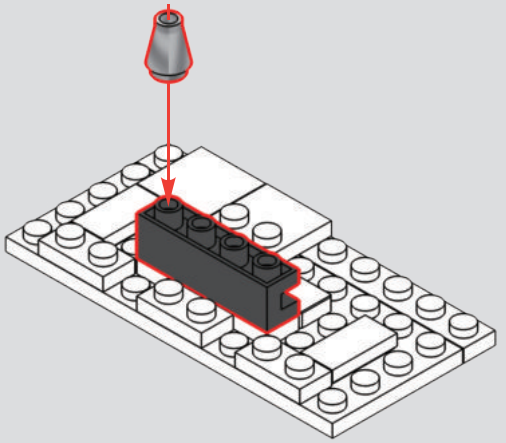

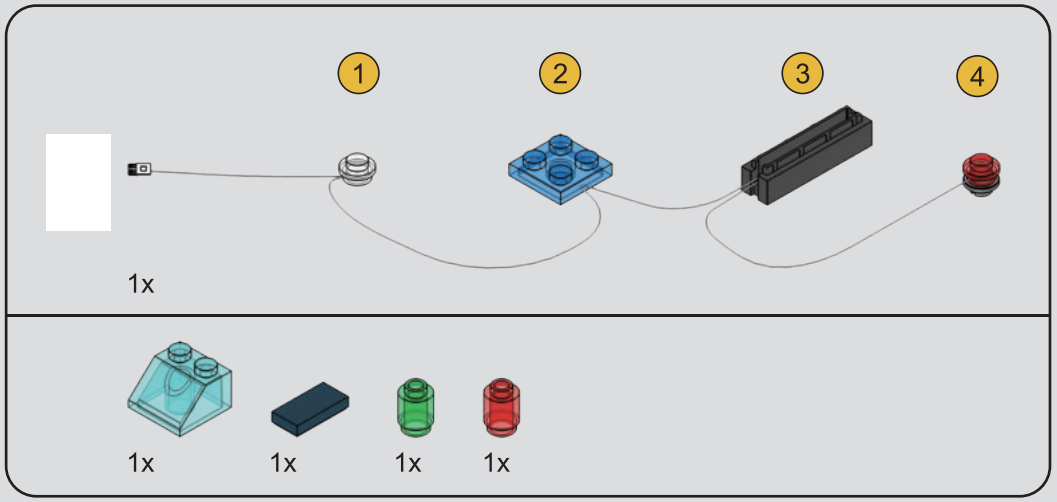

94

1

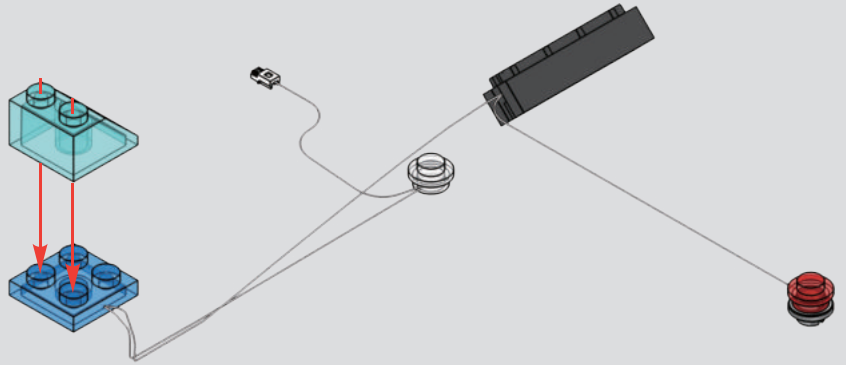

2

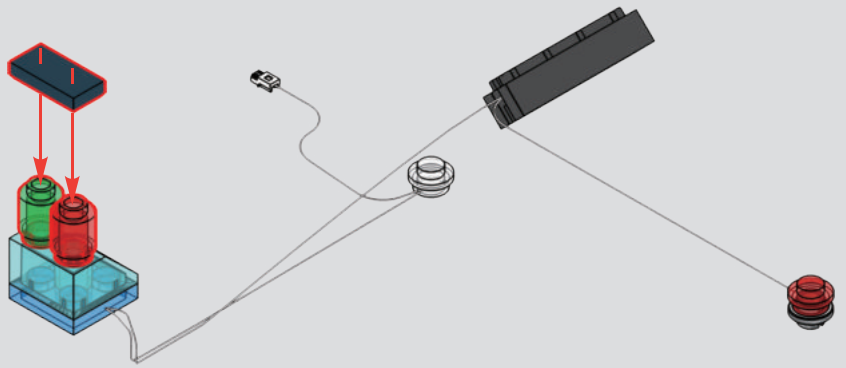

95

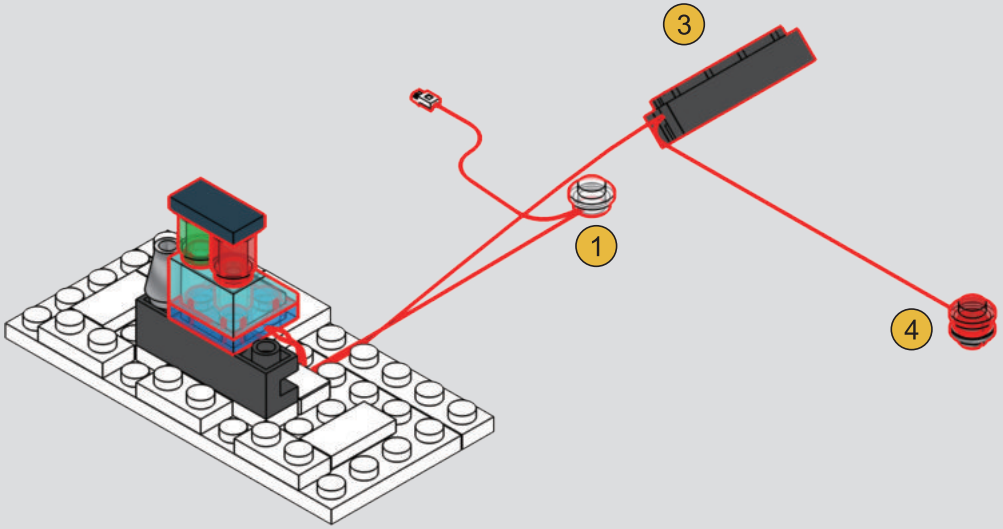

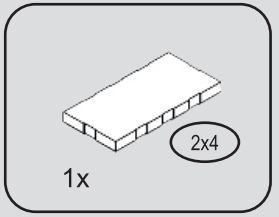

96

1

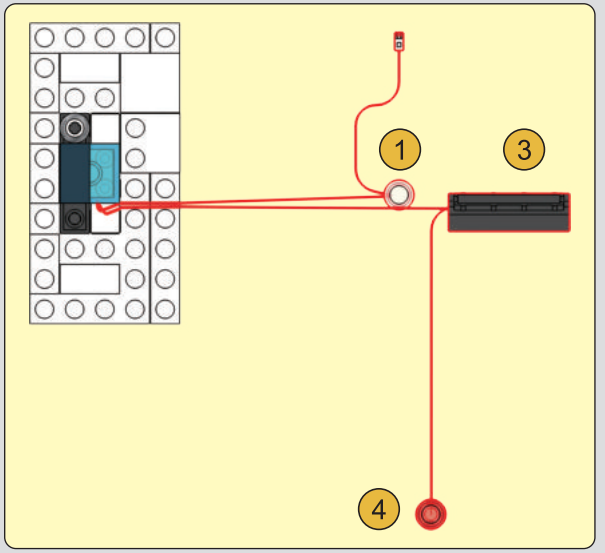

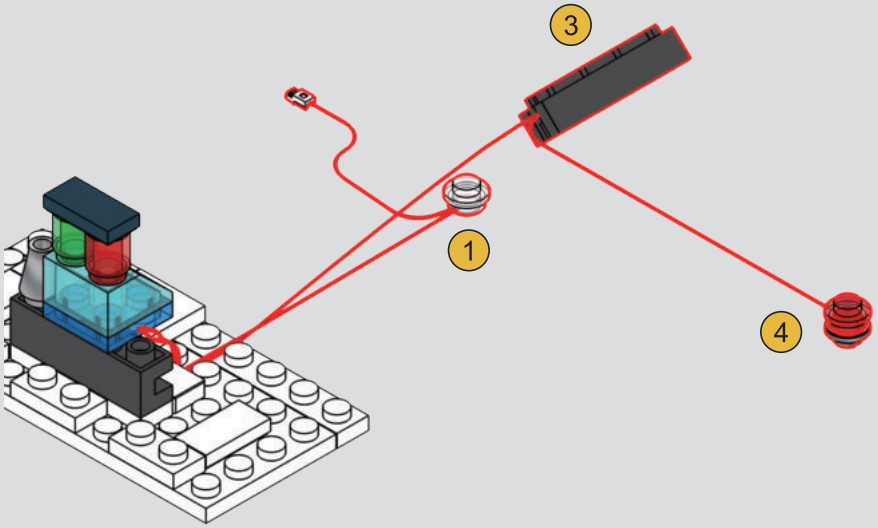

2

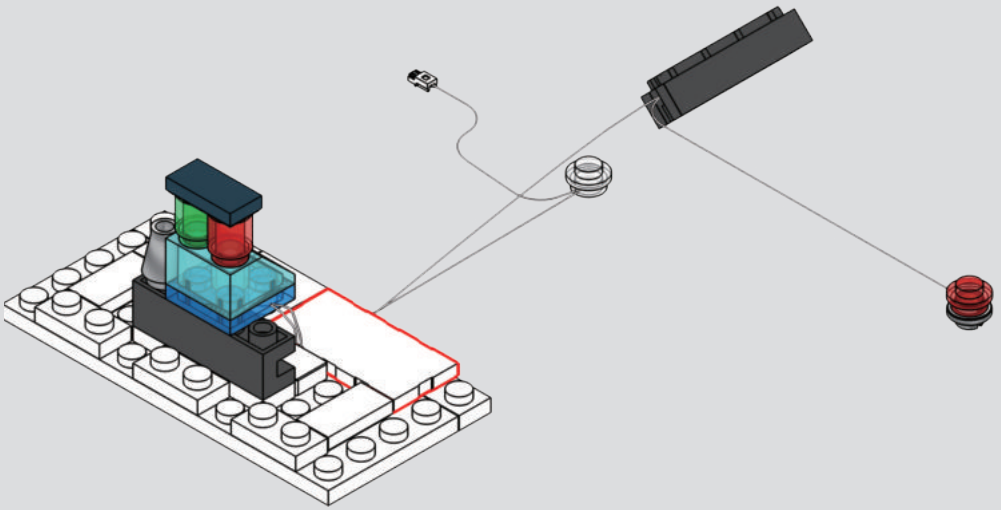

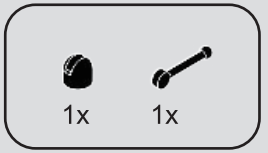

97

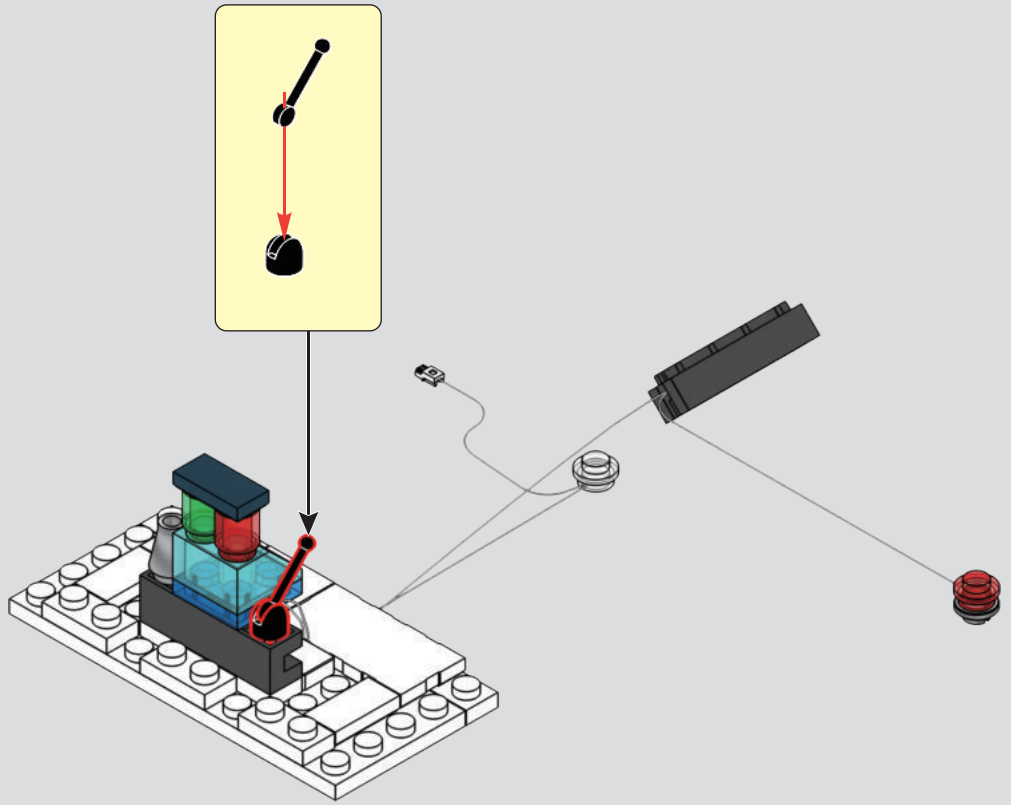

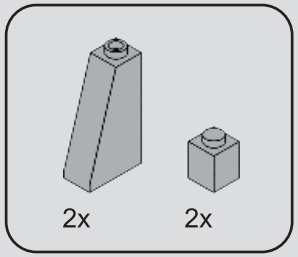

98

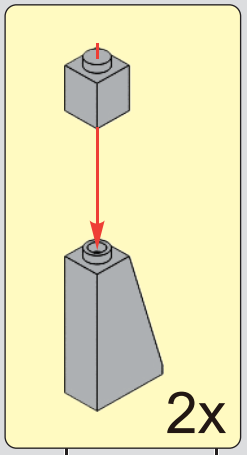

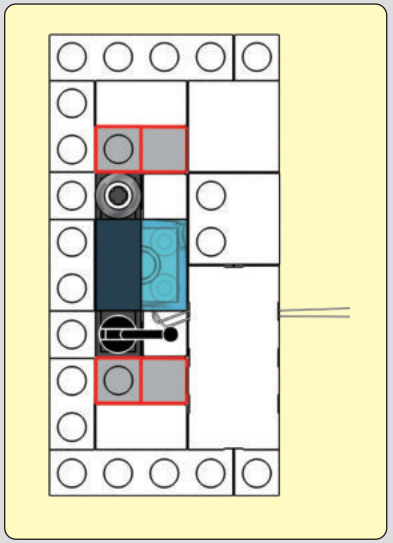

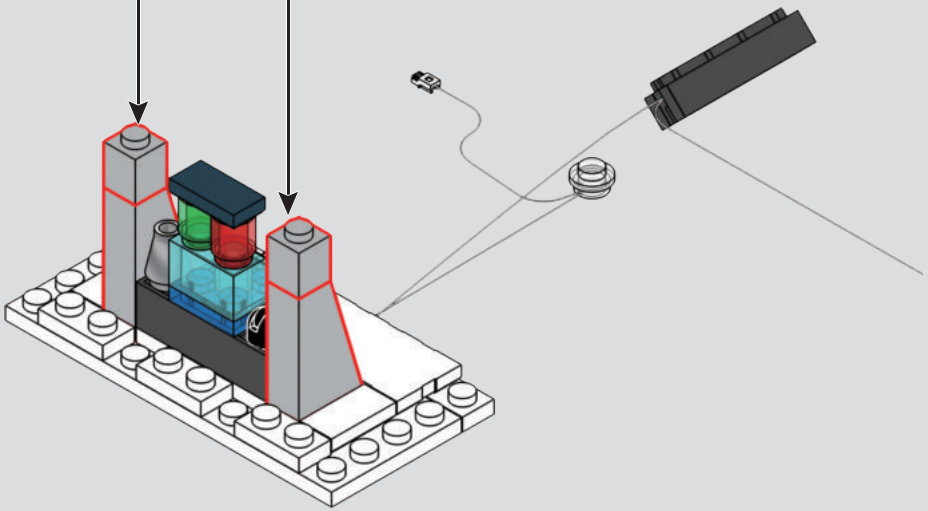

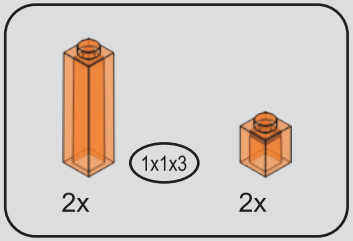

99

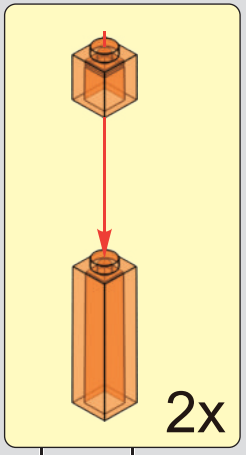

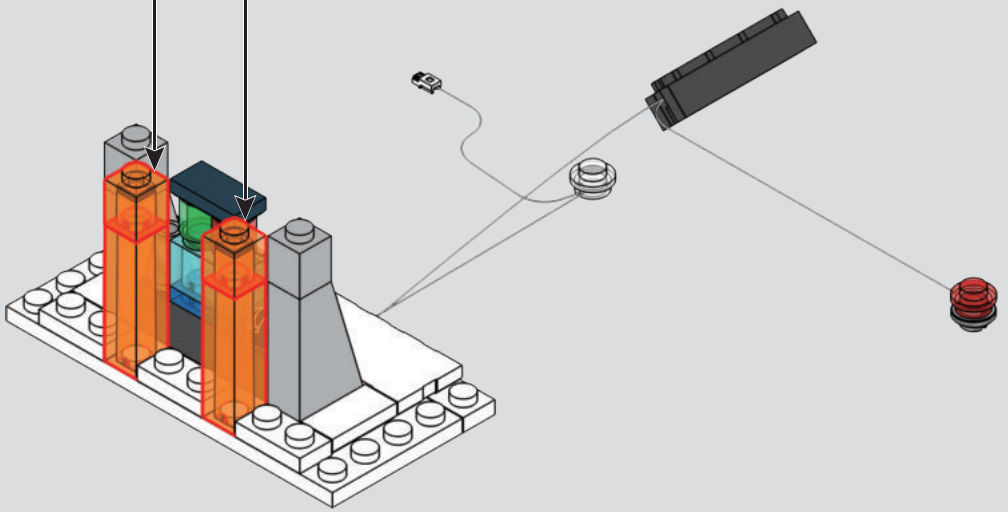

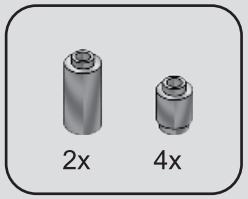

100

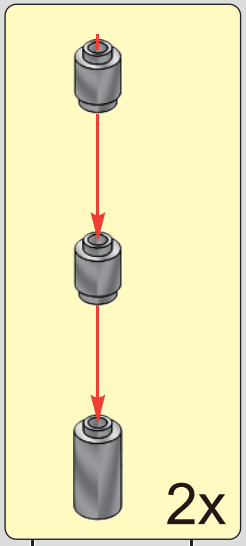

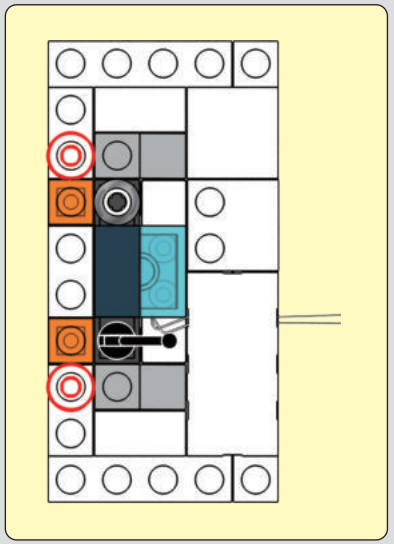

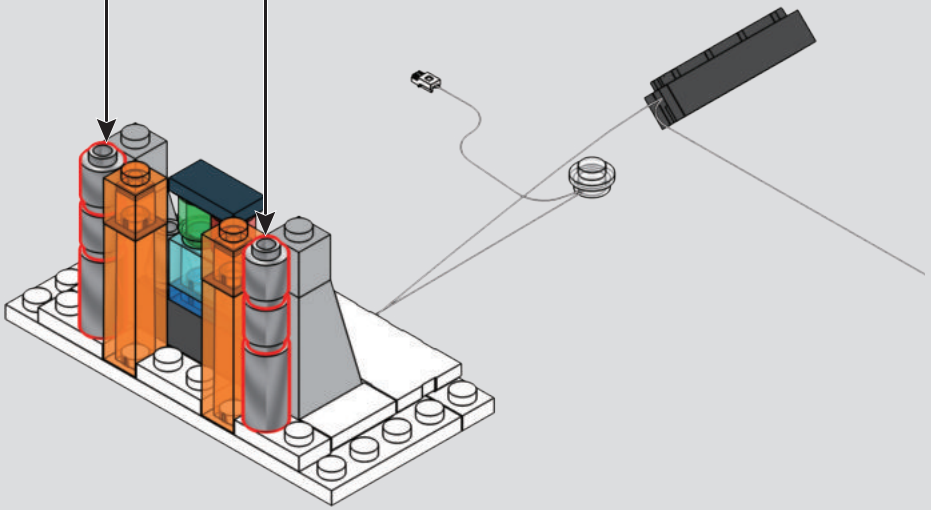

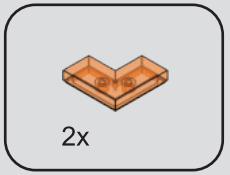

101

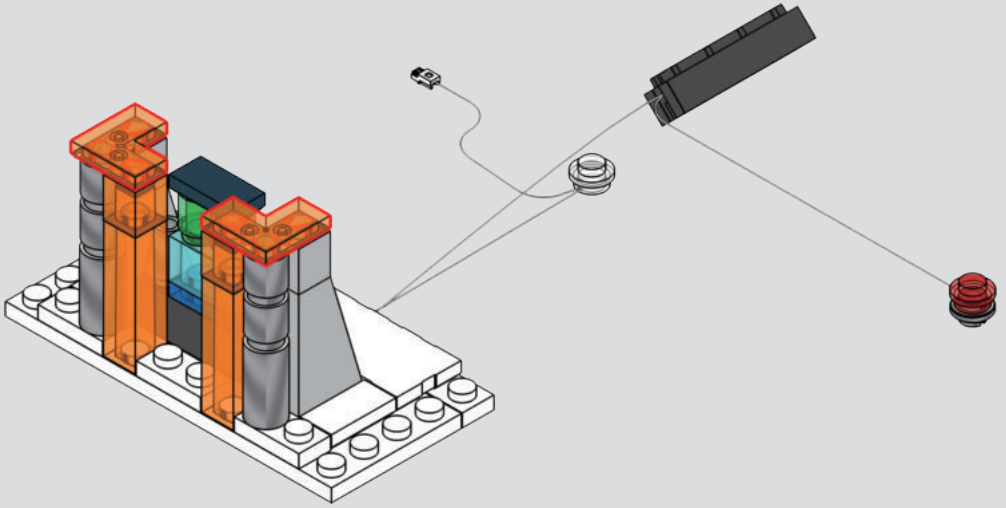

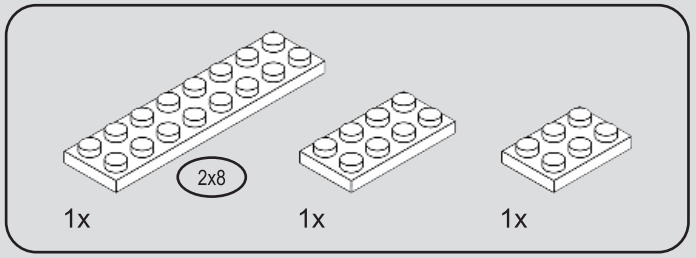

102

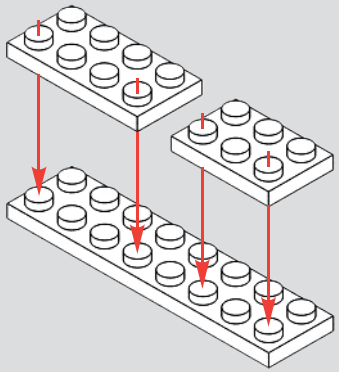

103

1

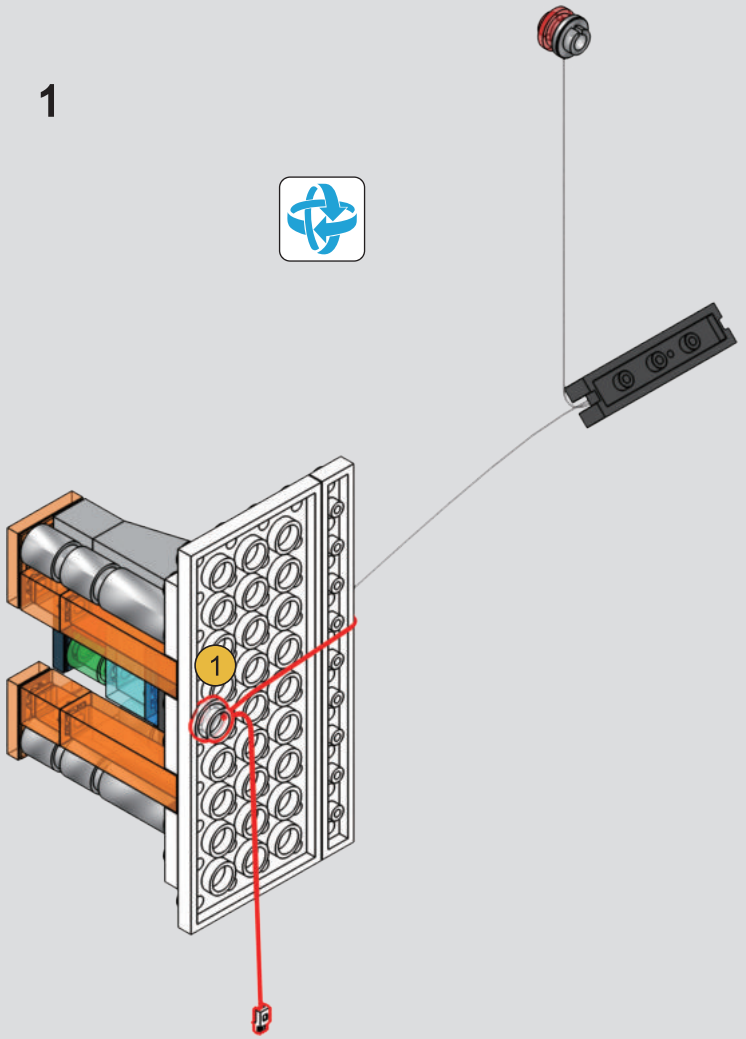

2

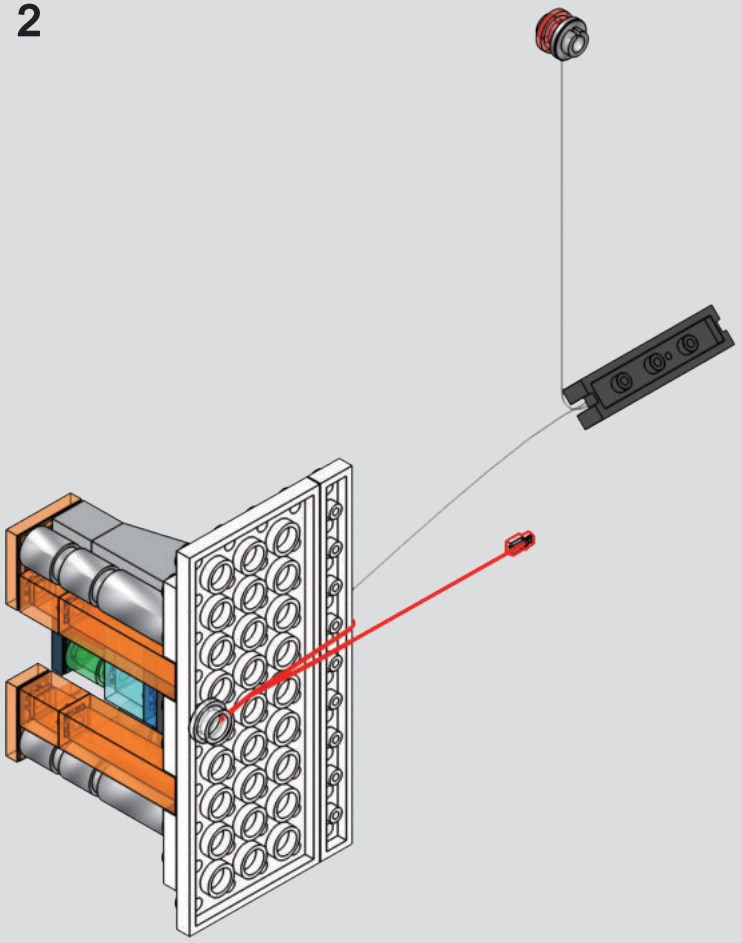

3

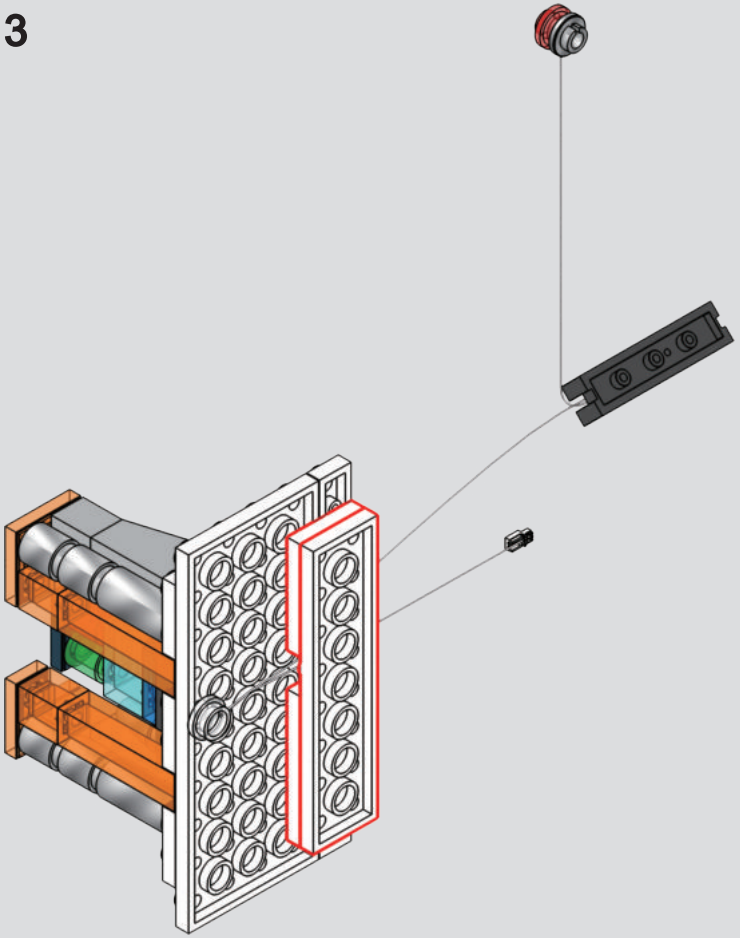

104

1

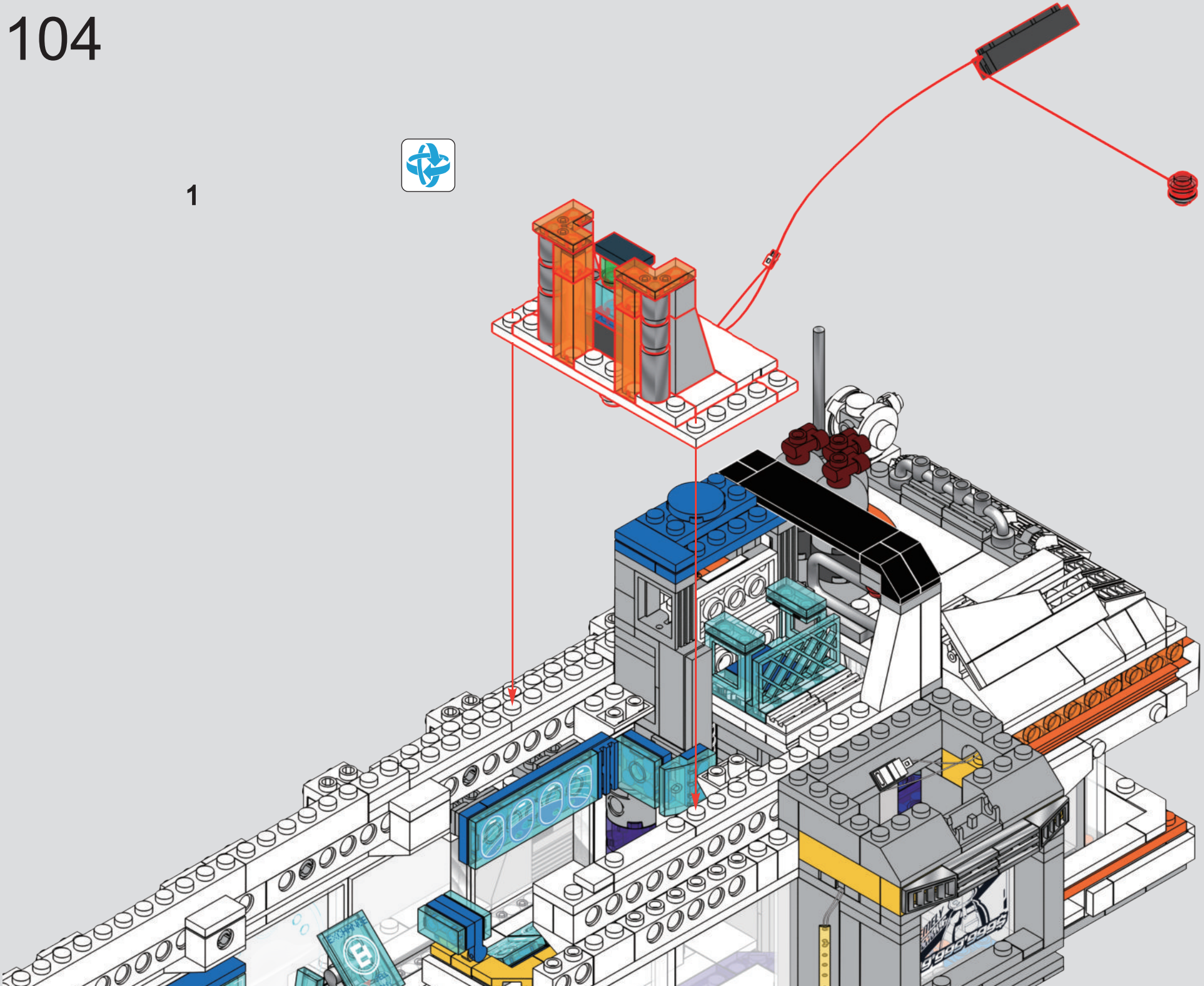

2

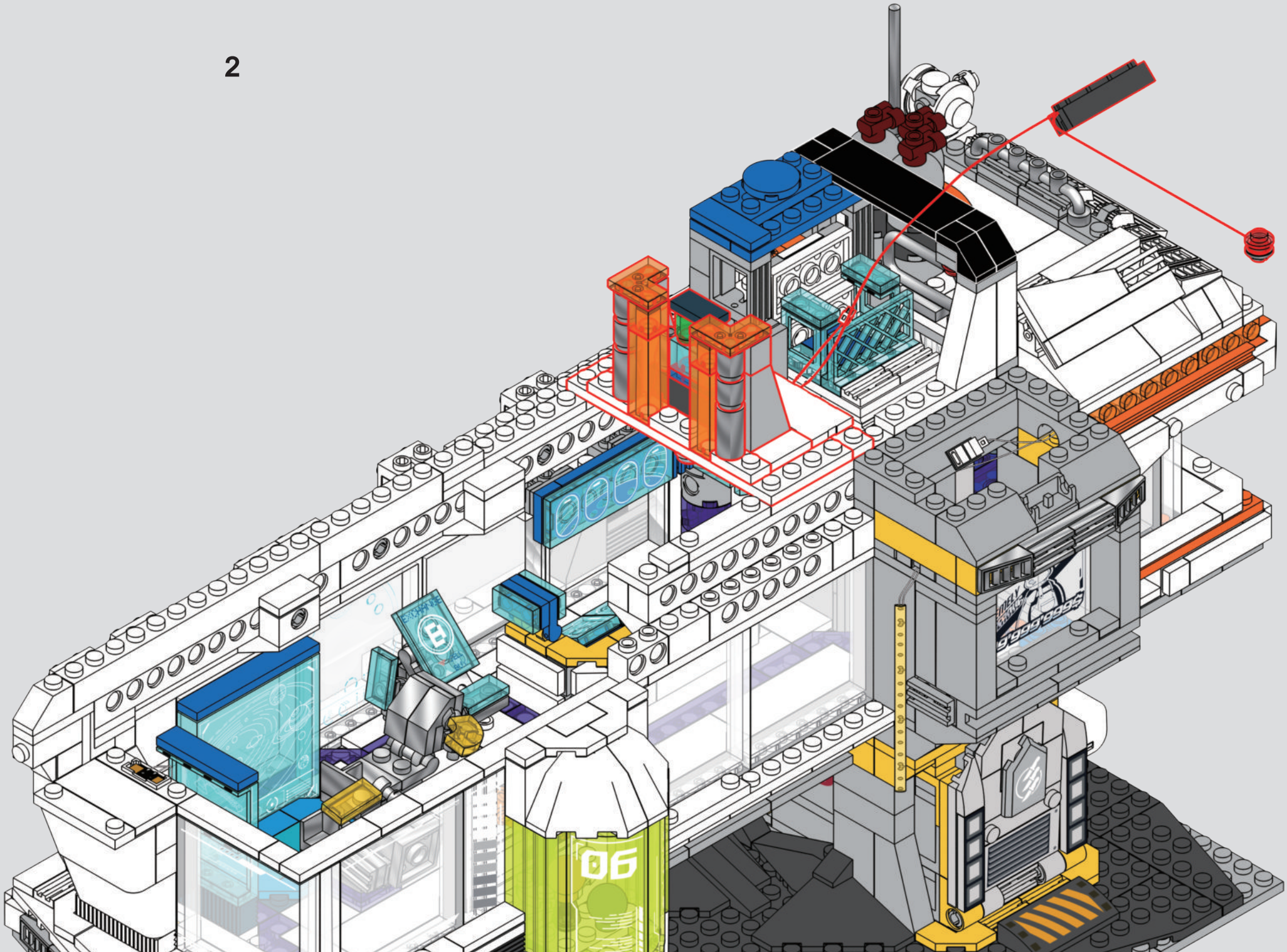

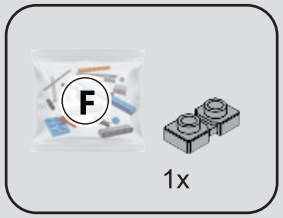

105

1

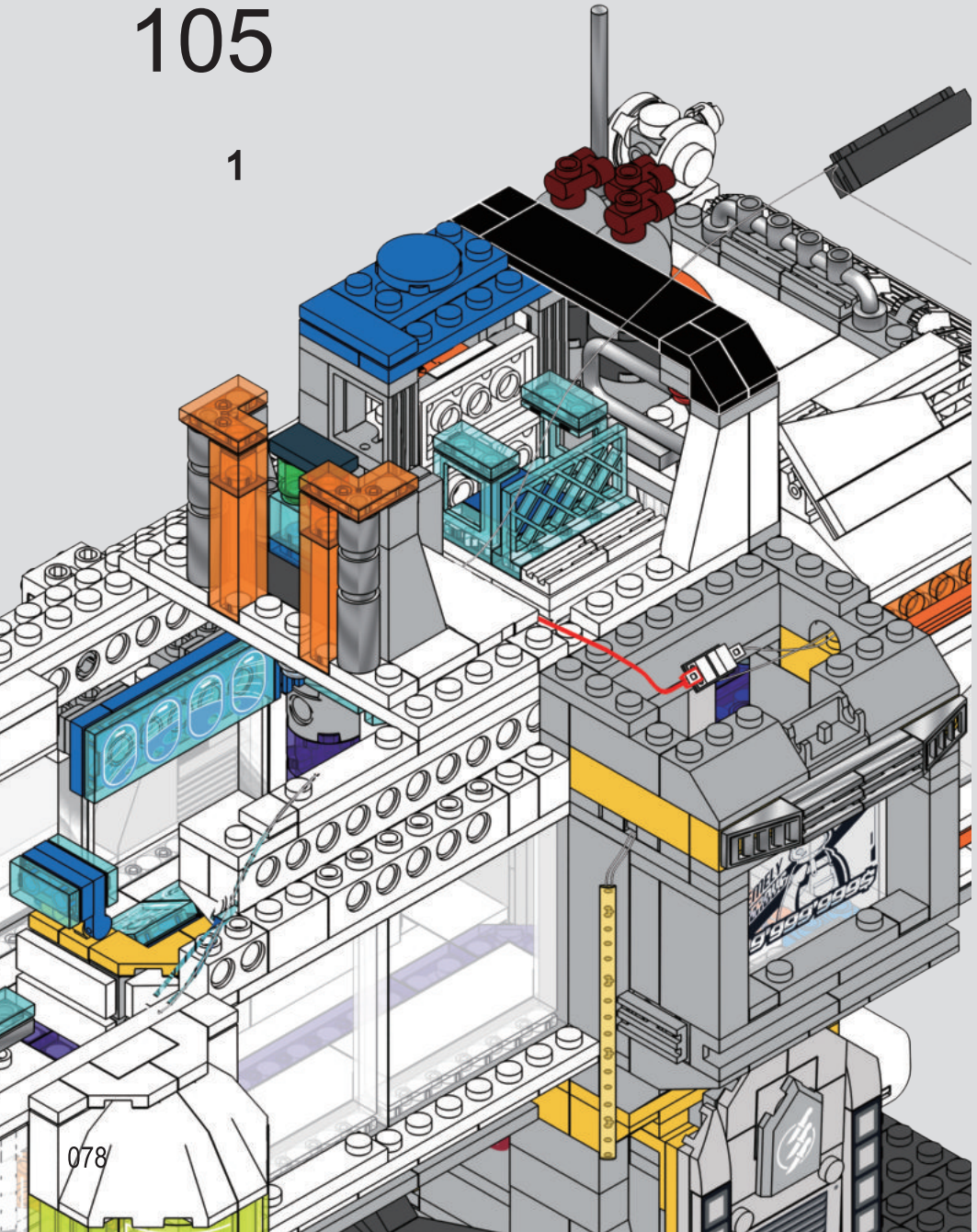

2

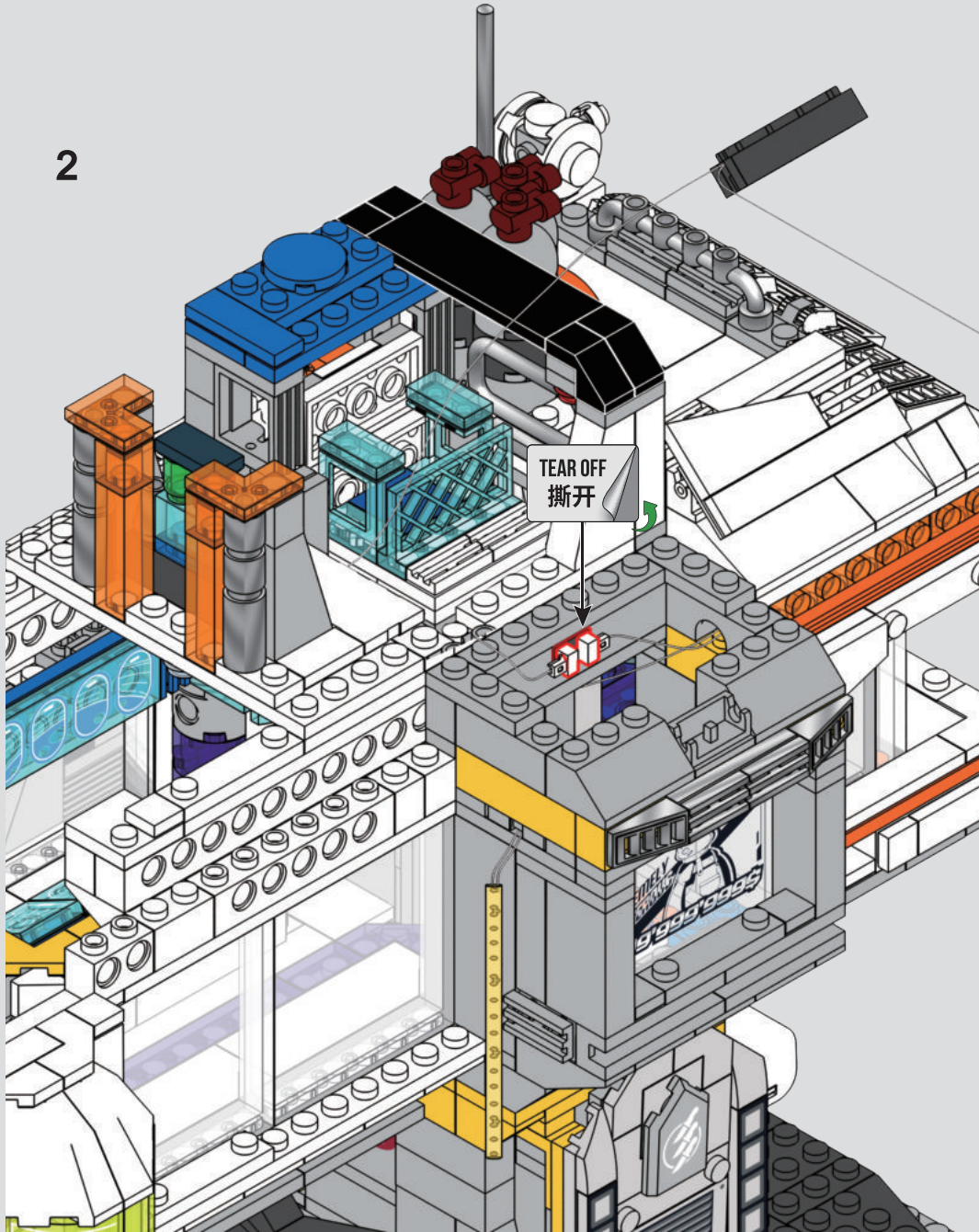

3

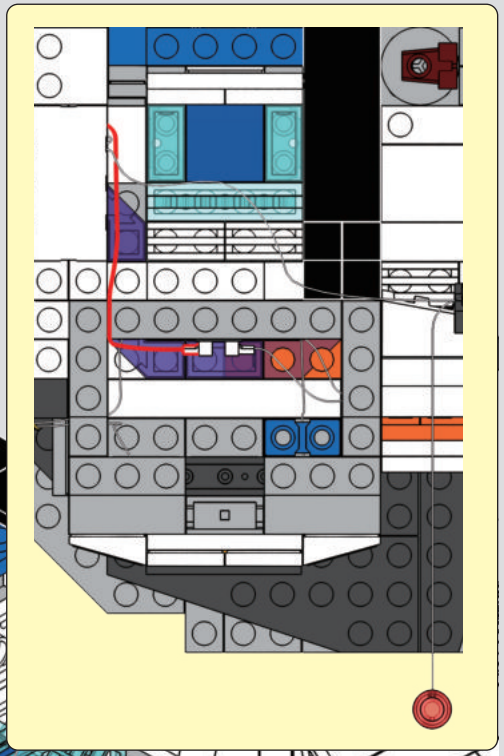

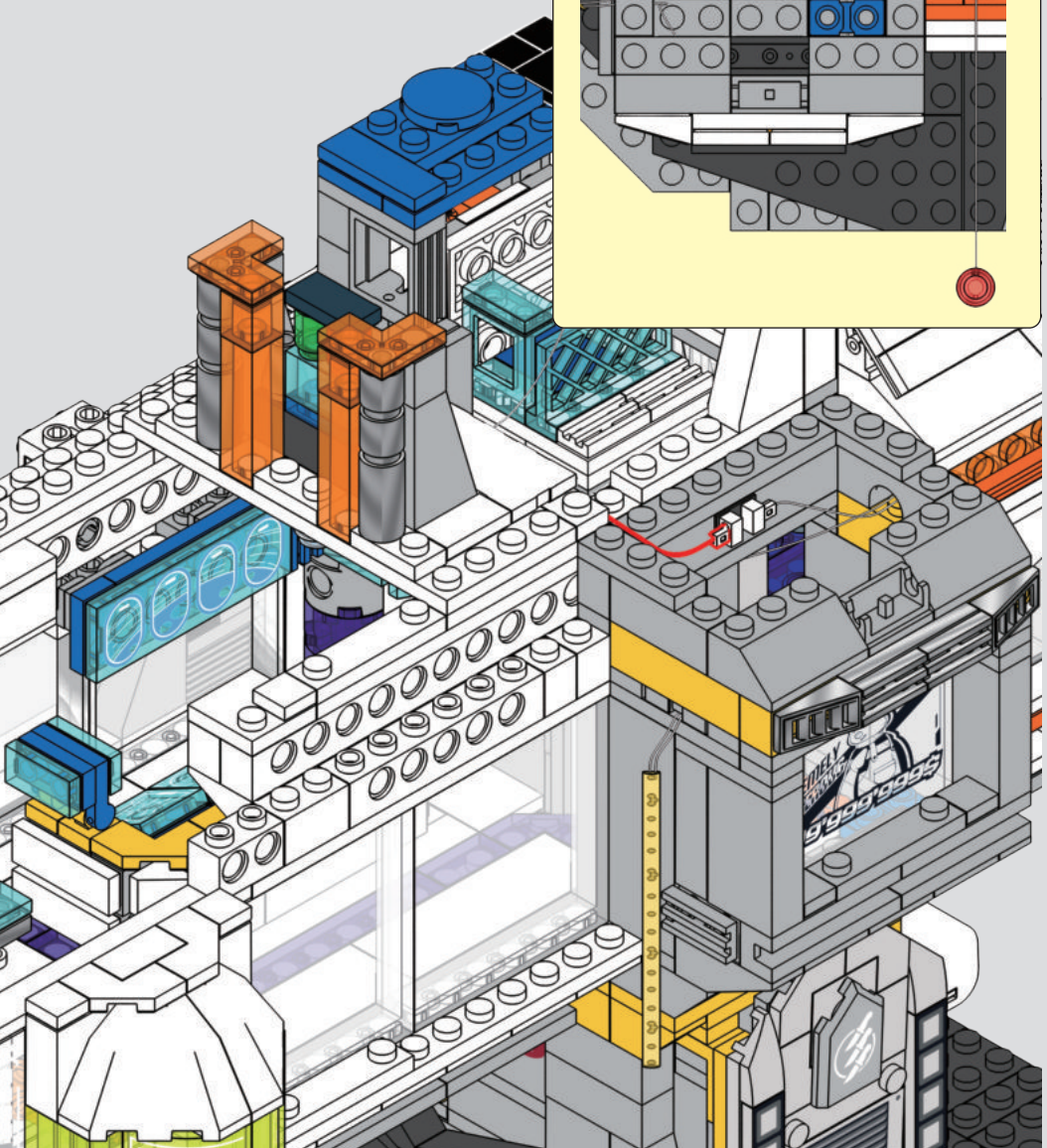

4

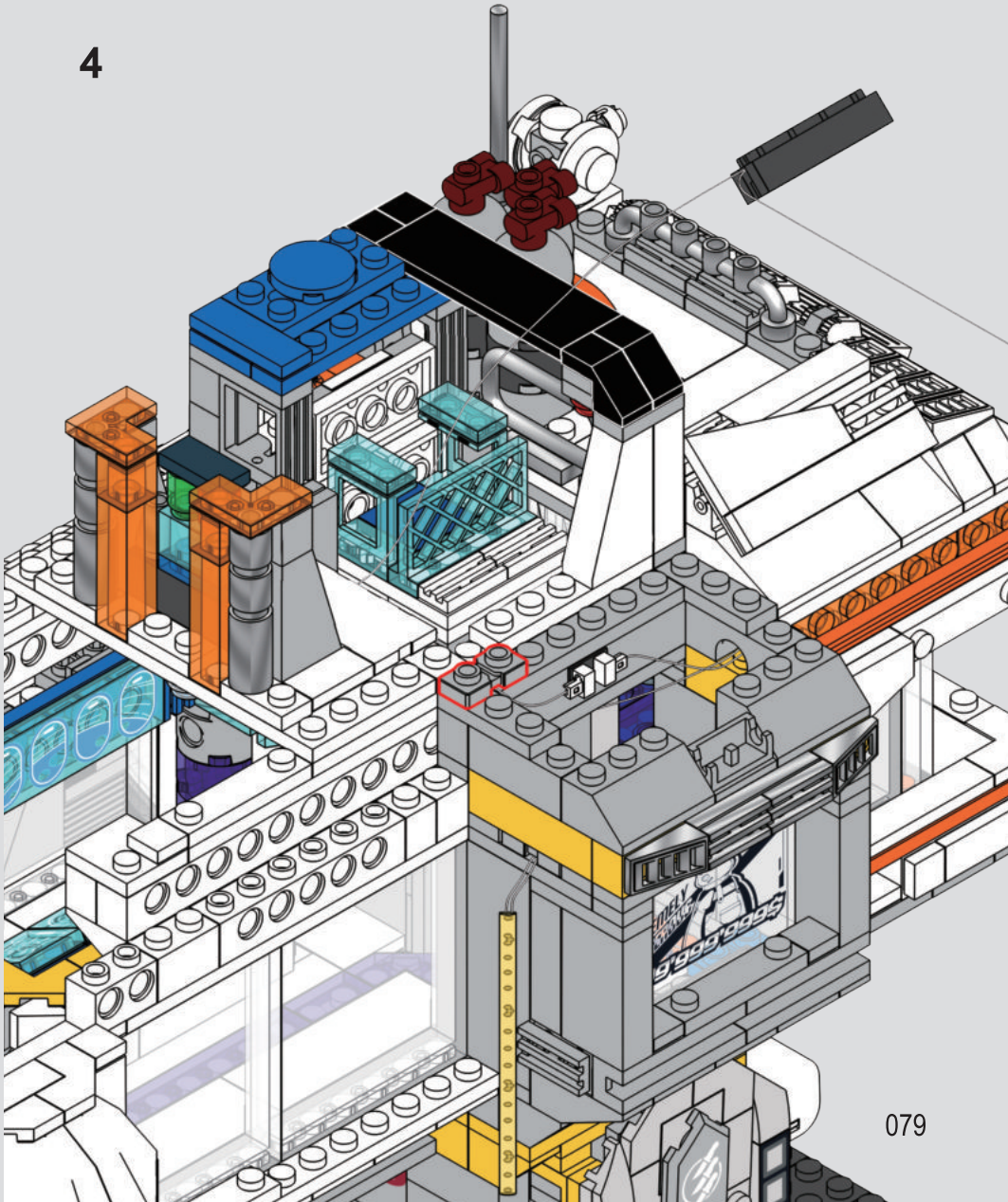

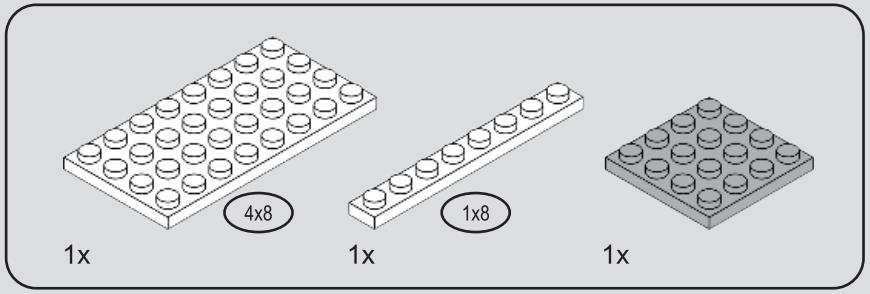

106

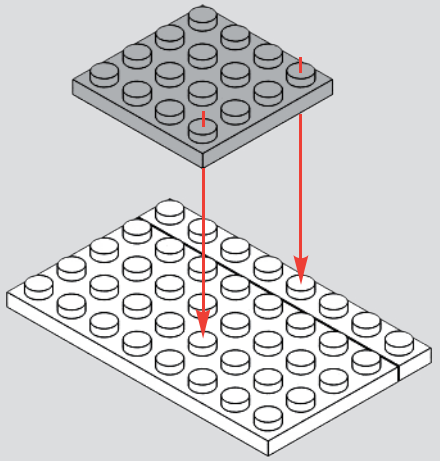

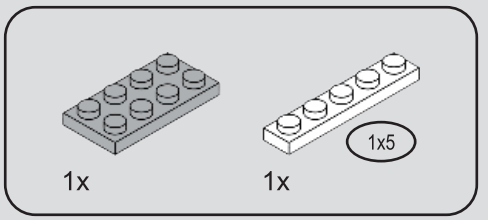

107

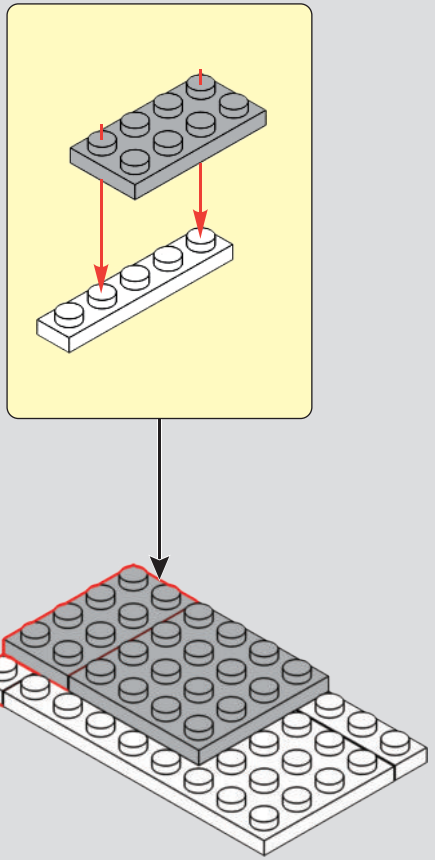

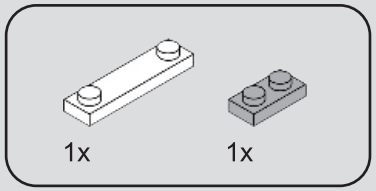

108

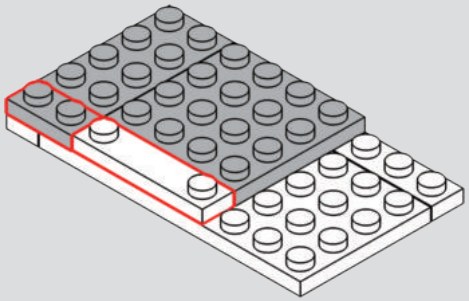

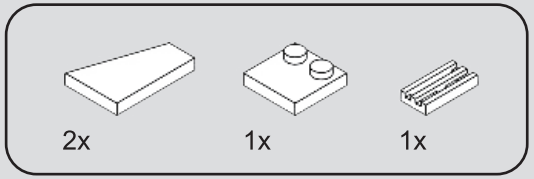

109

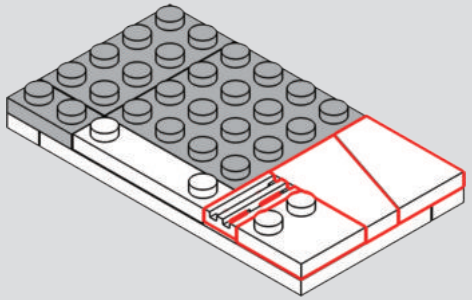

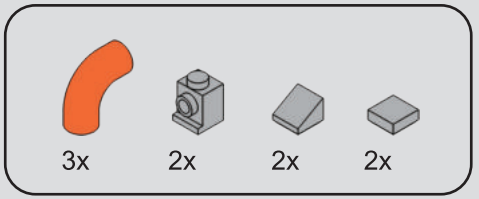

110

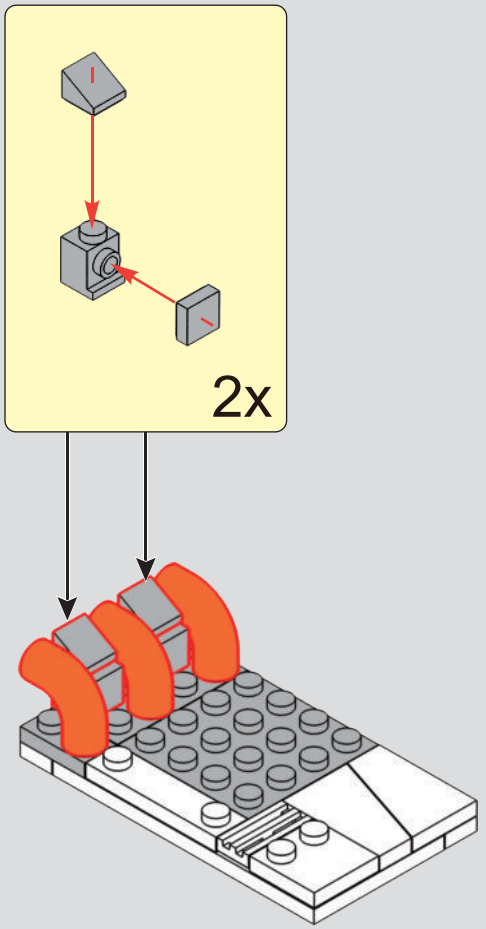

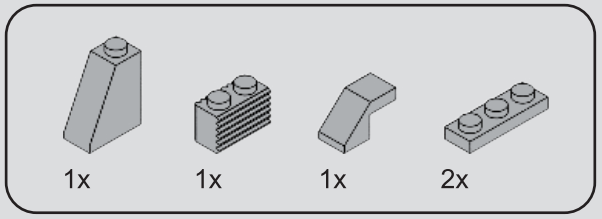

111

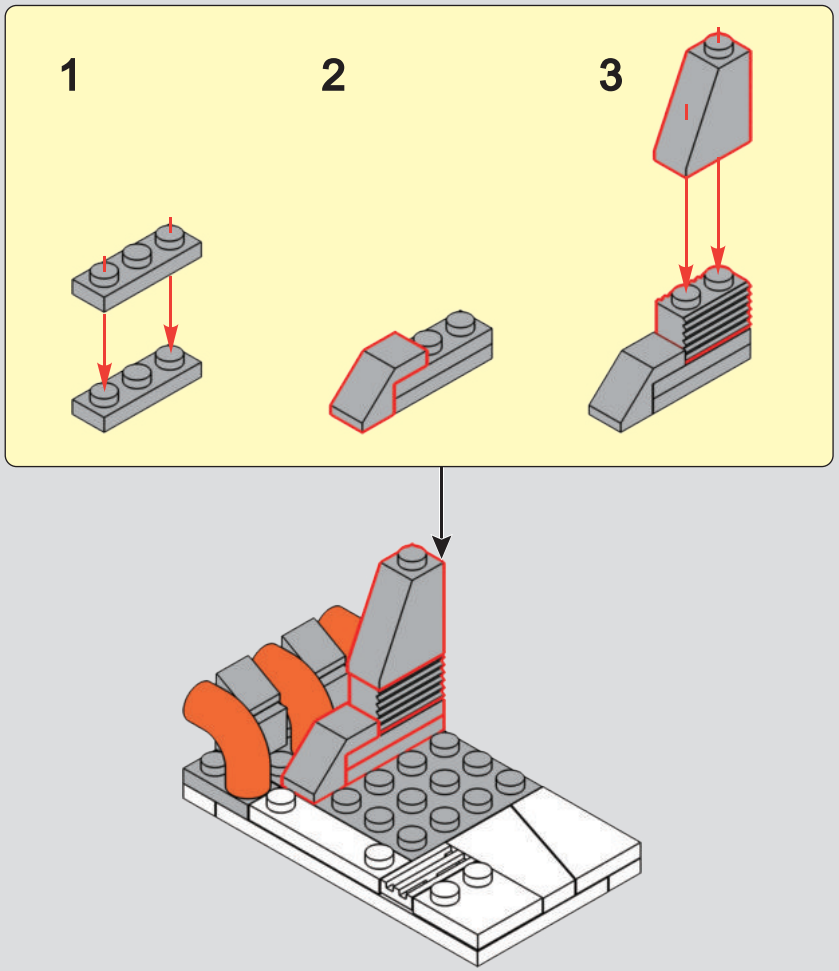

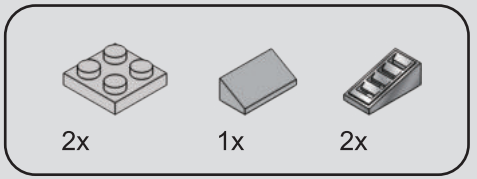

112

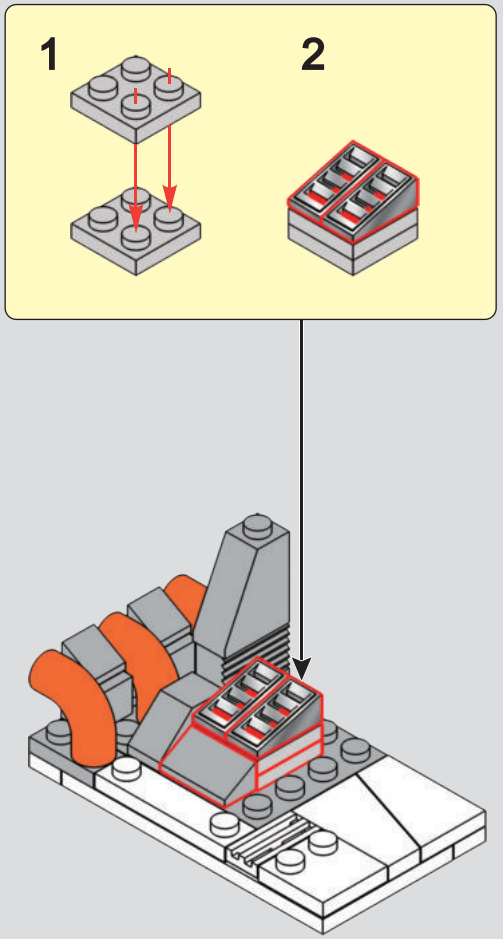

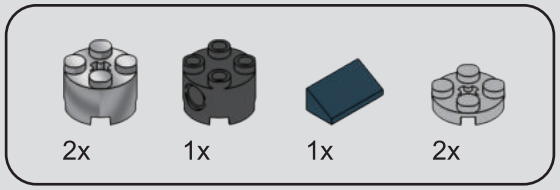

113

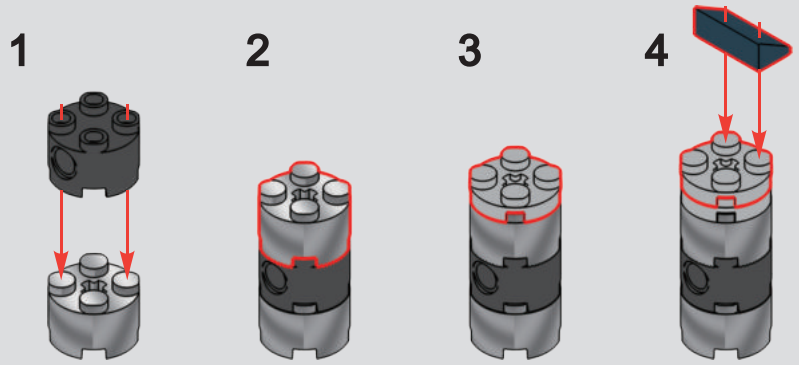

114

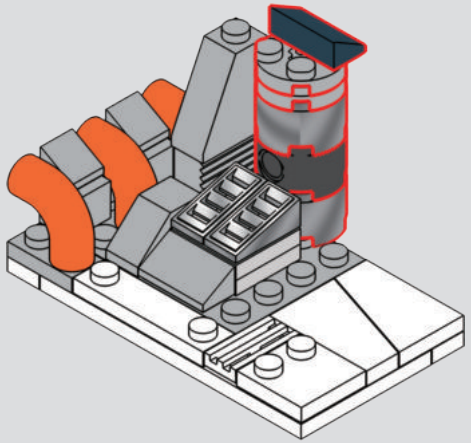

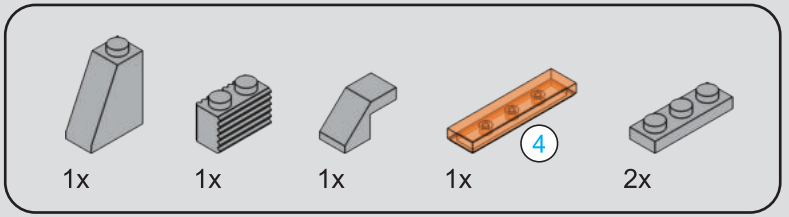

115

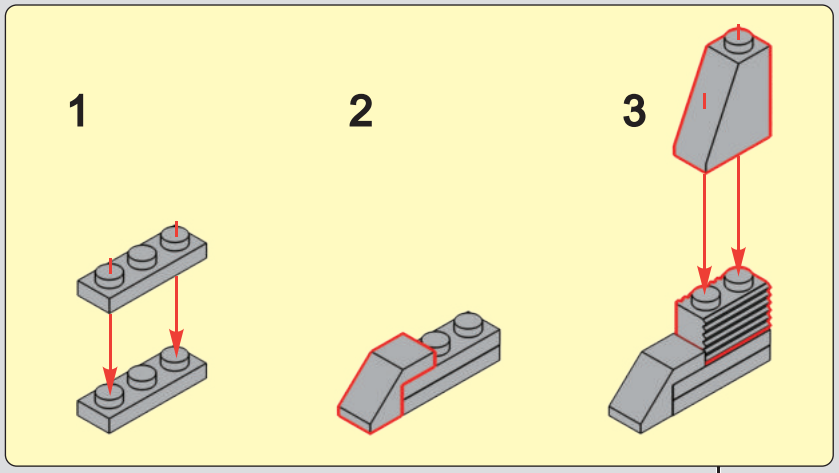

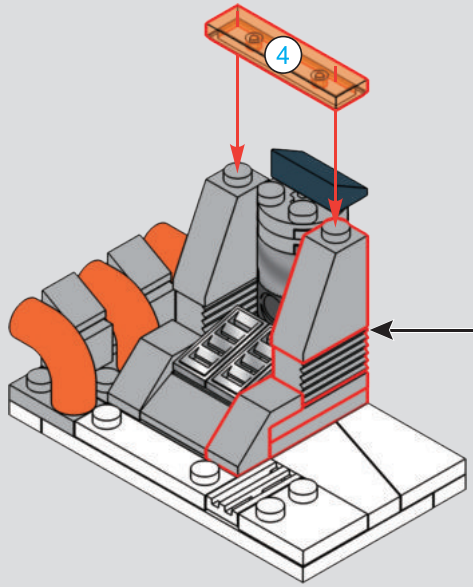



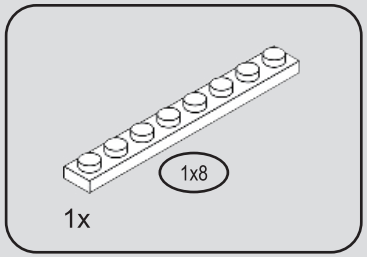

116

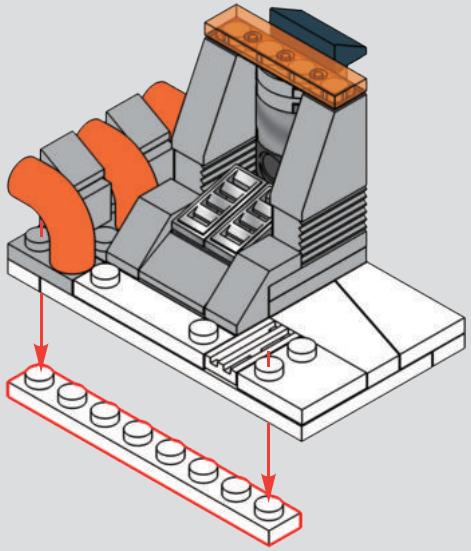

117

1

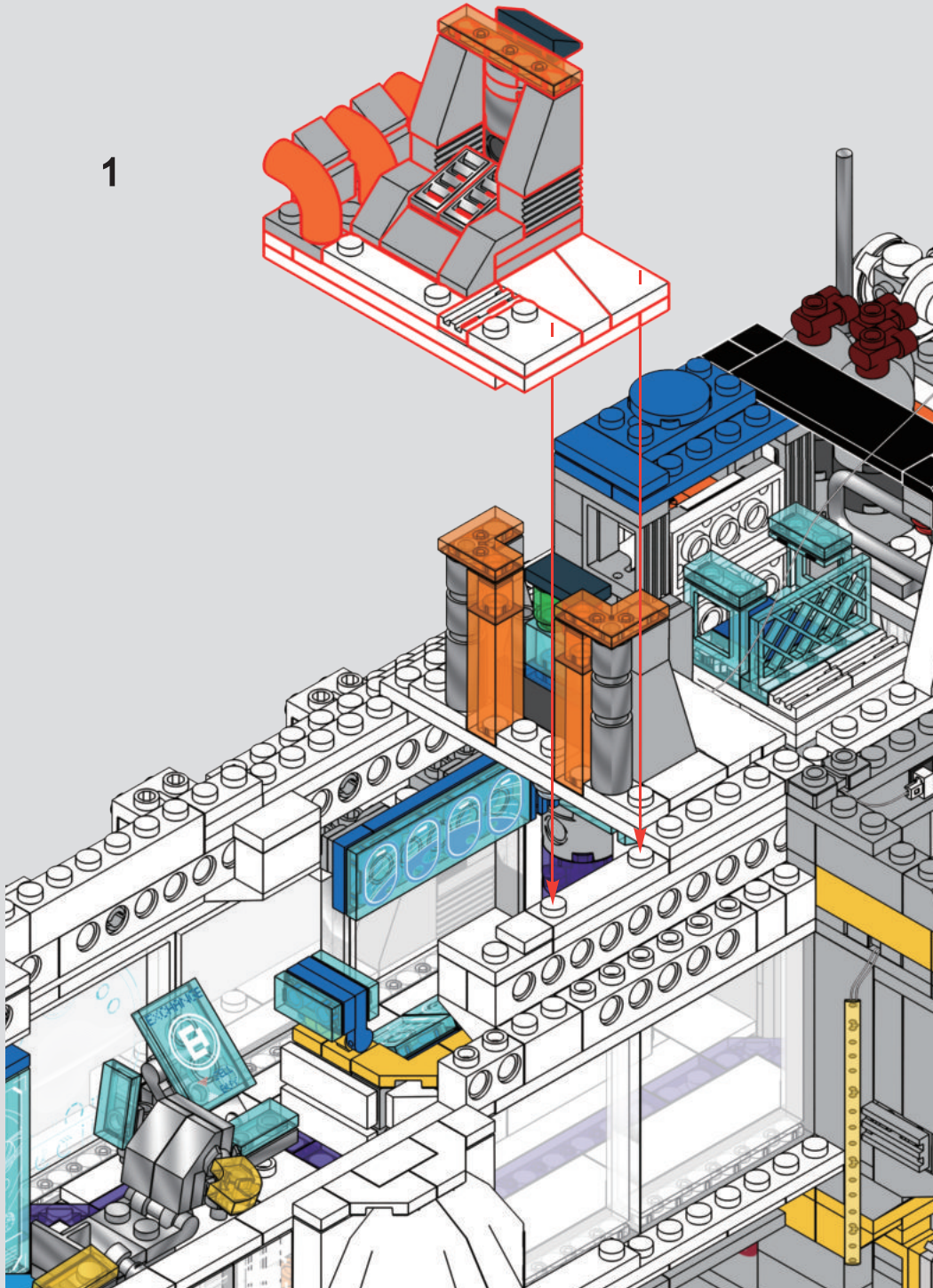

2

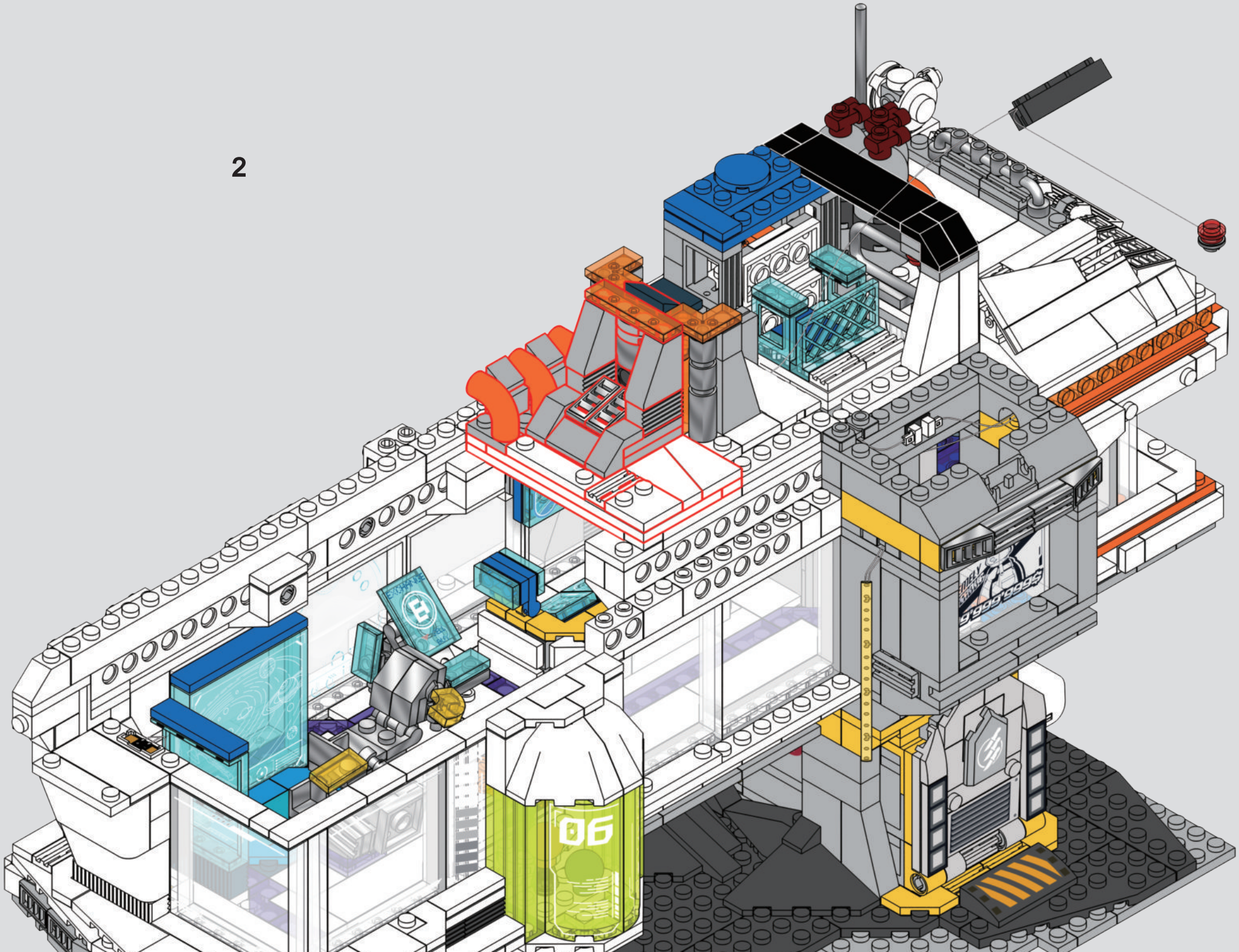

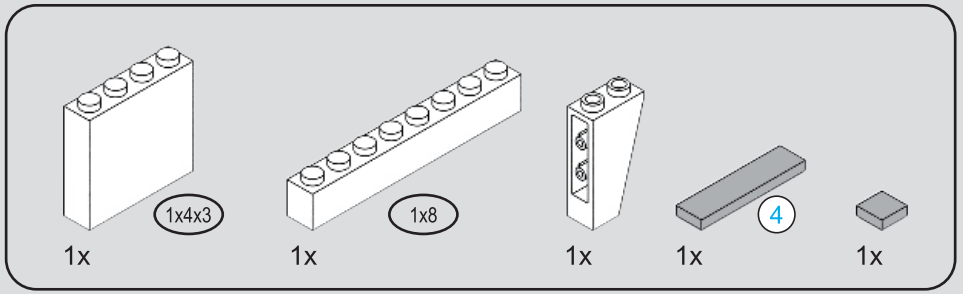



118

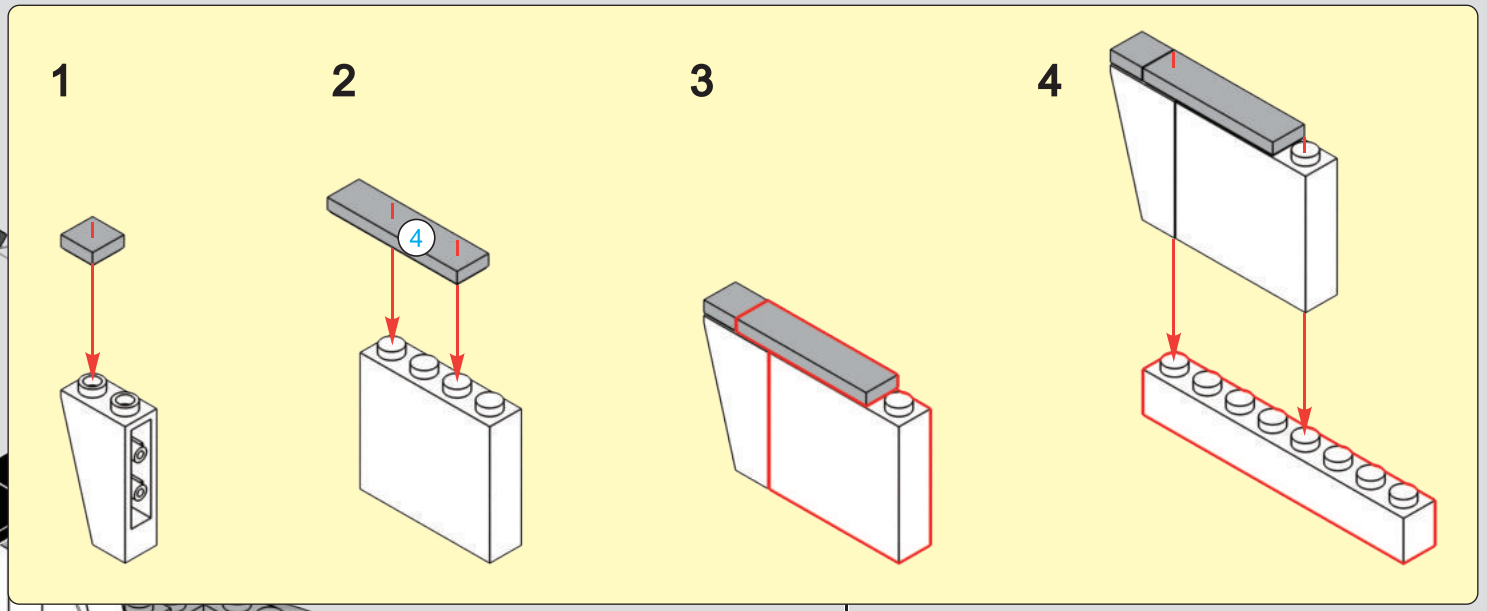

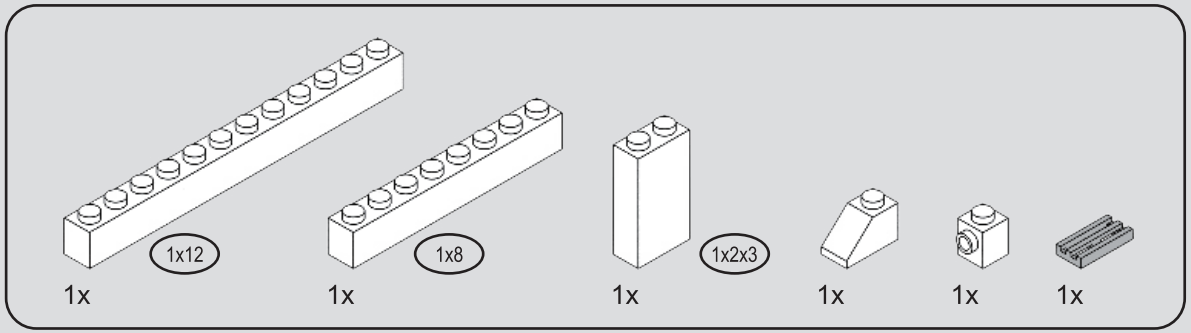

119

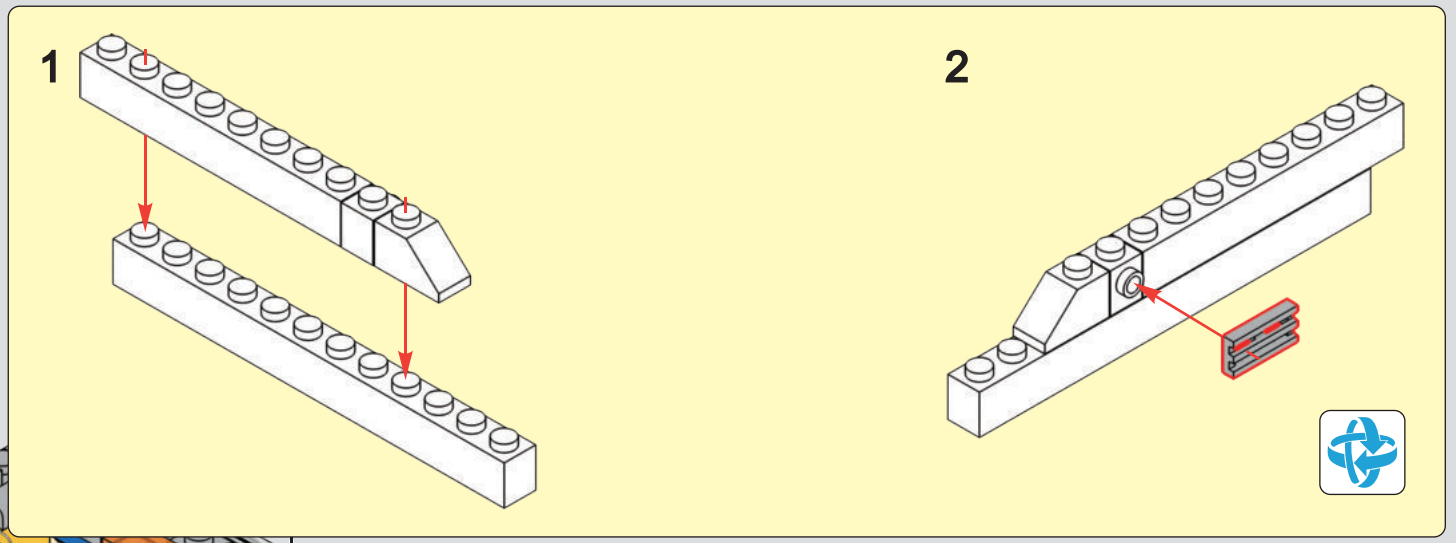

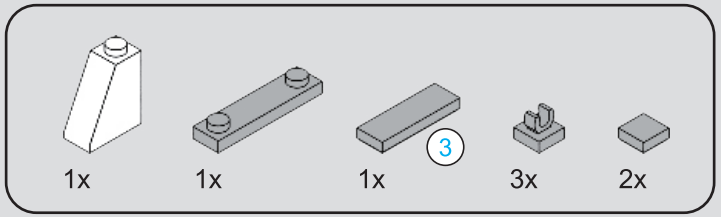

120

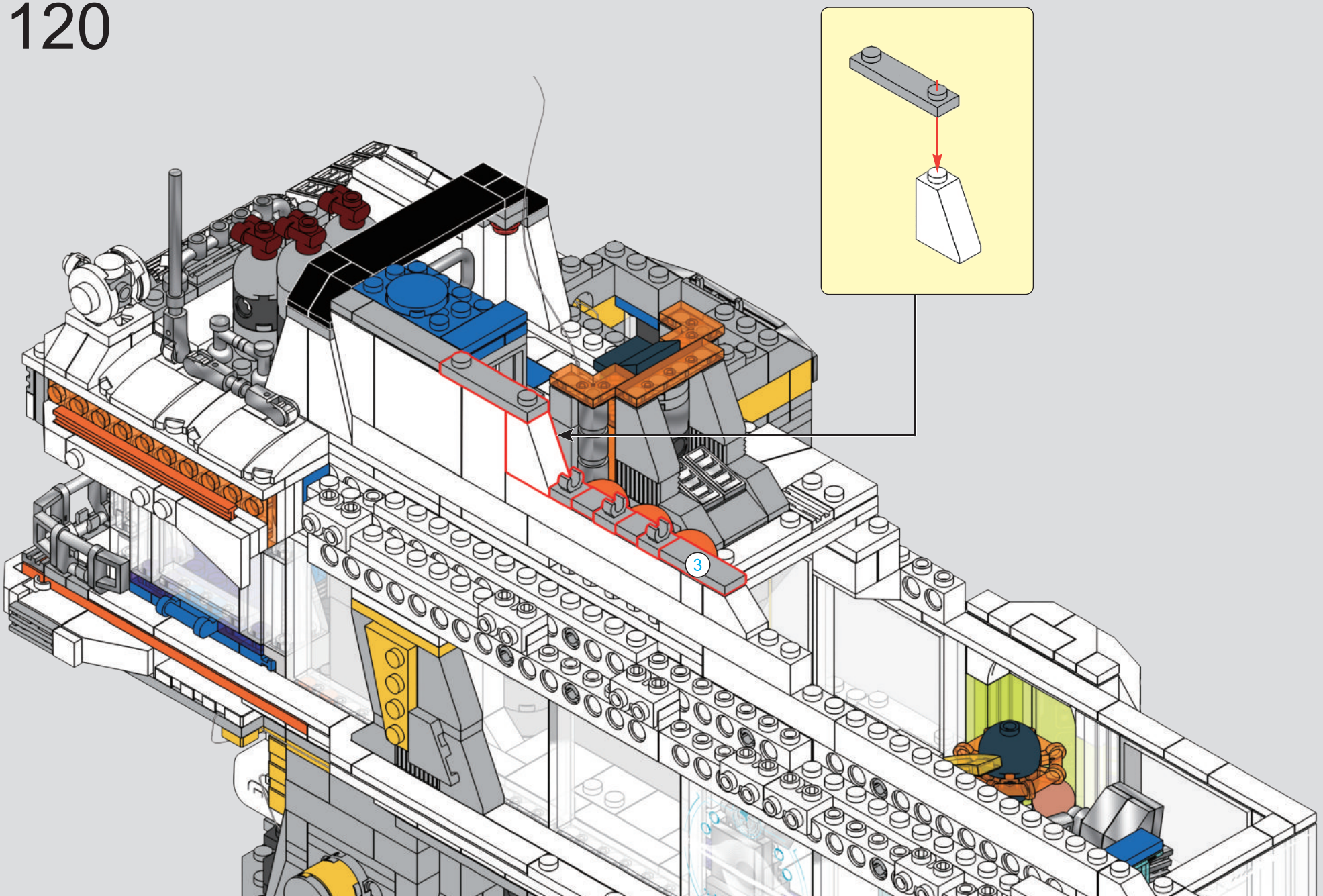

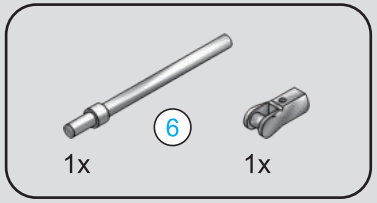

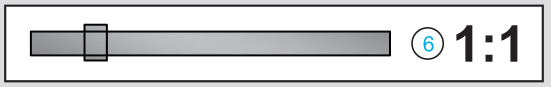

121

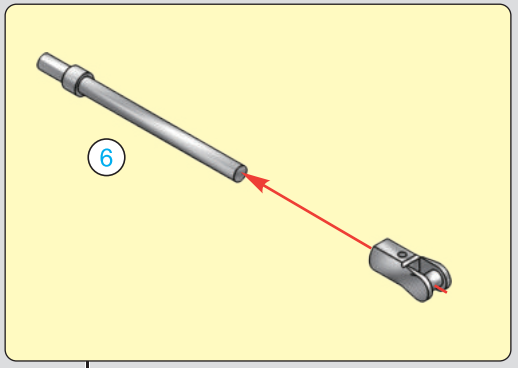

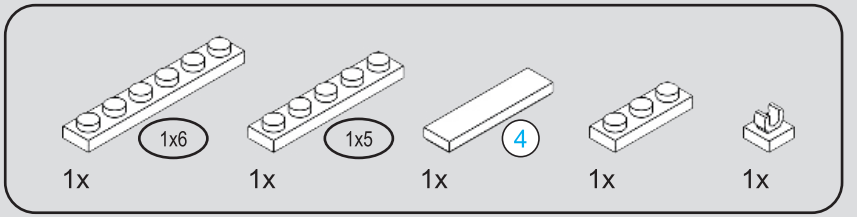

122

1

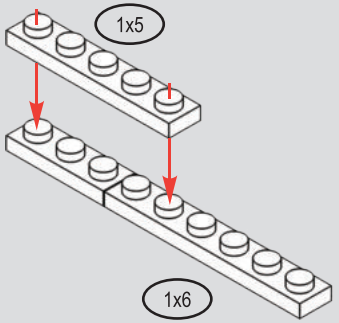

2

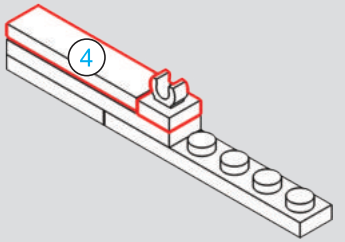



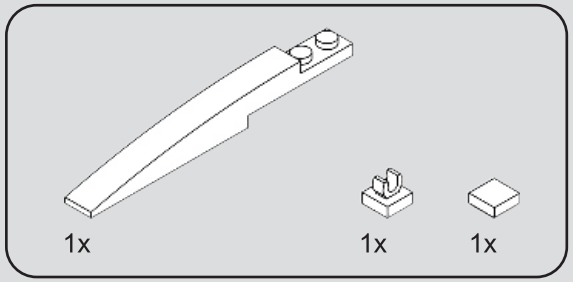

123

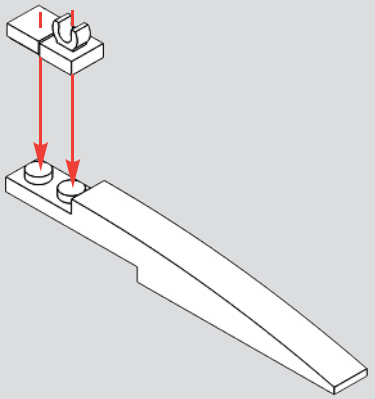

124

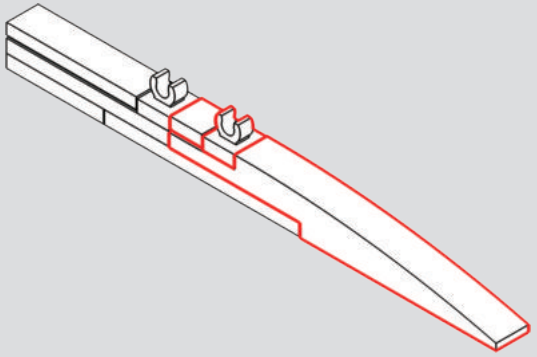

125

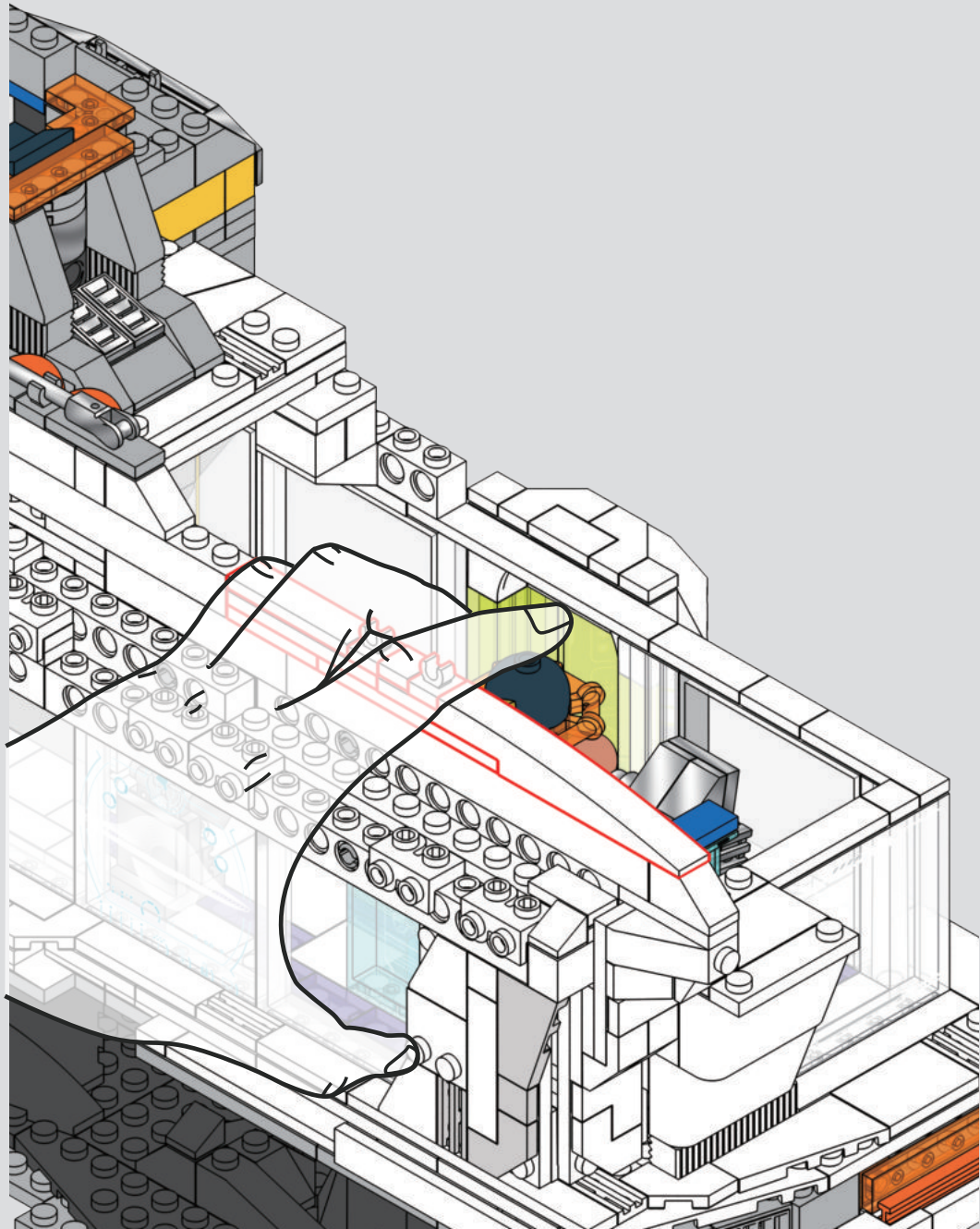


10


F

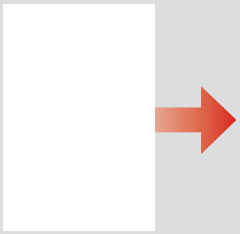

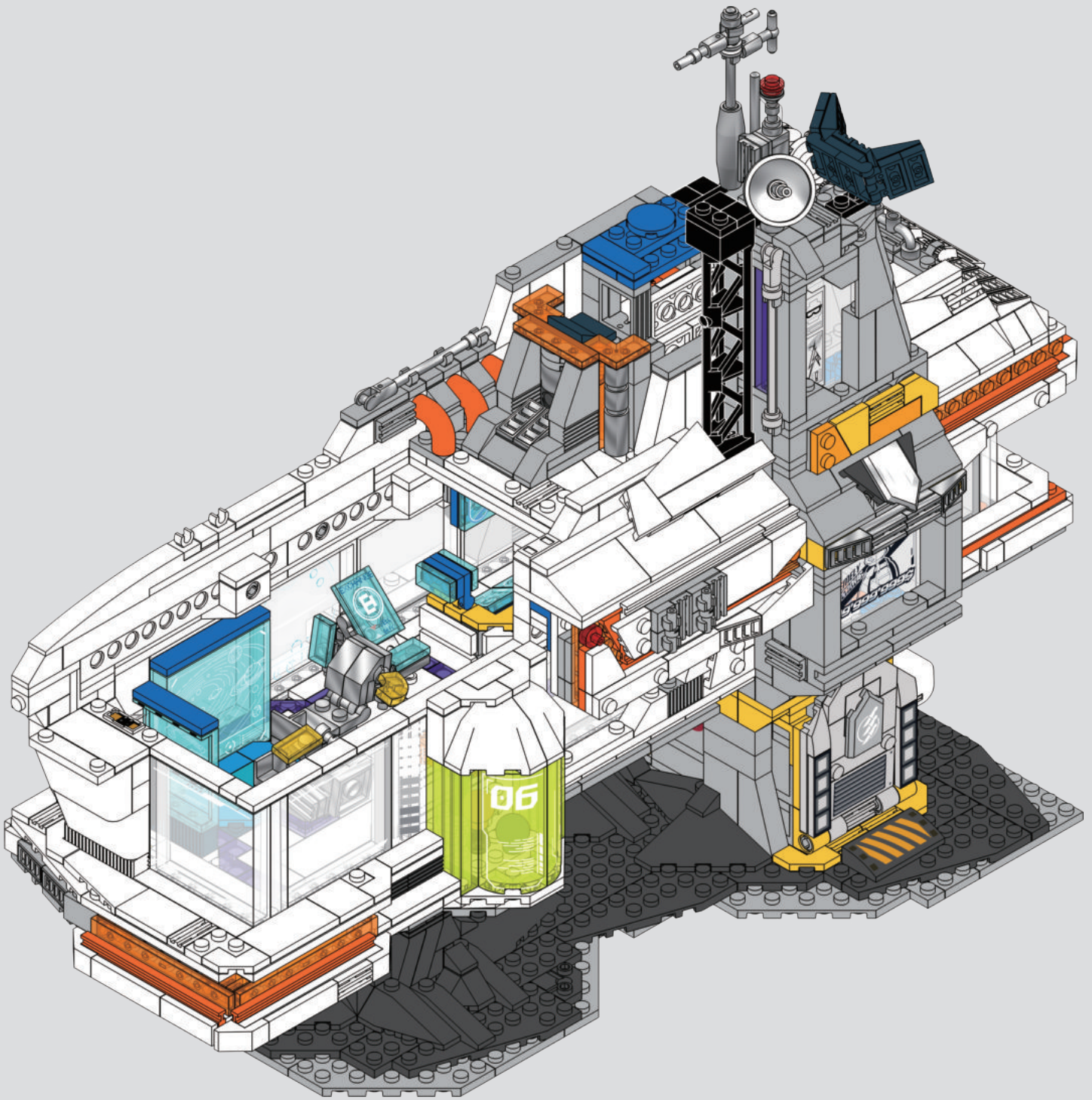
06

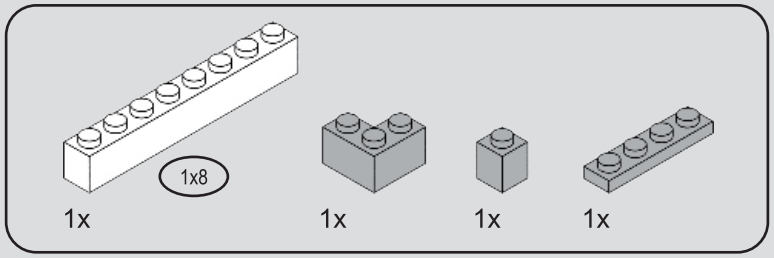

126

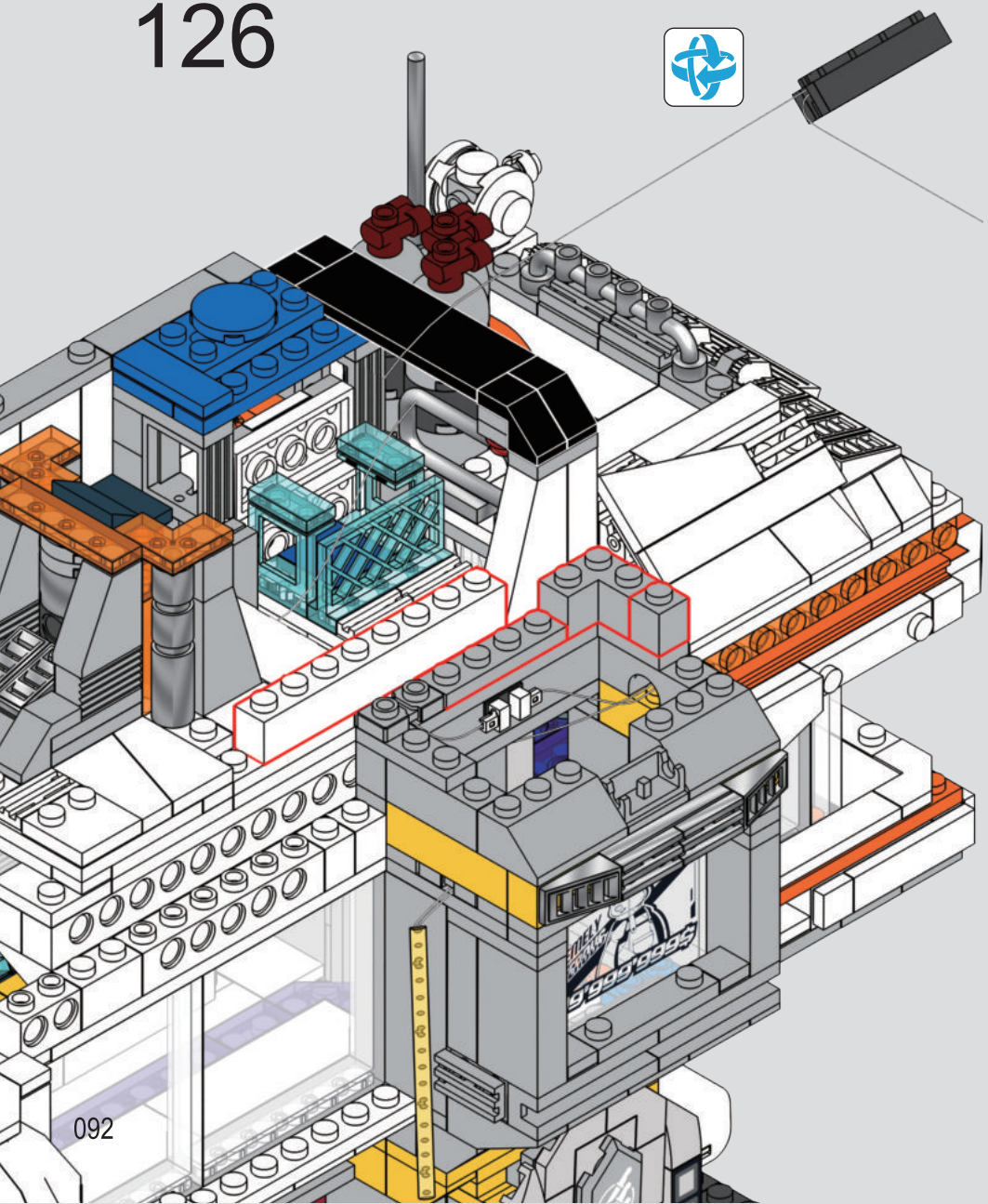

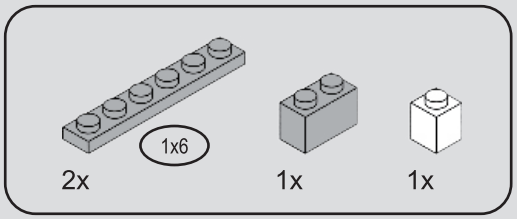

127

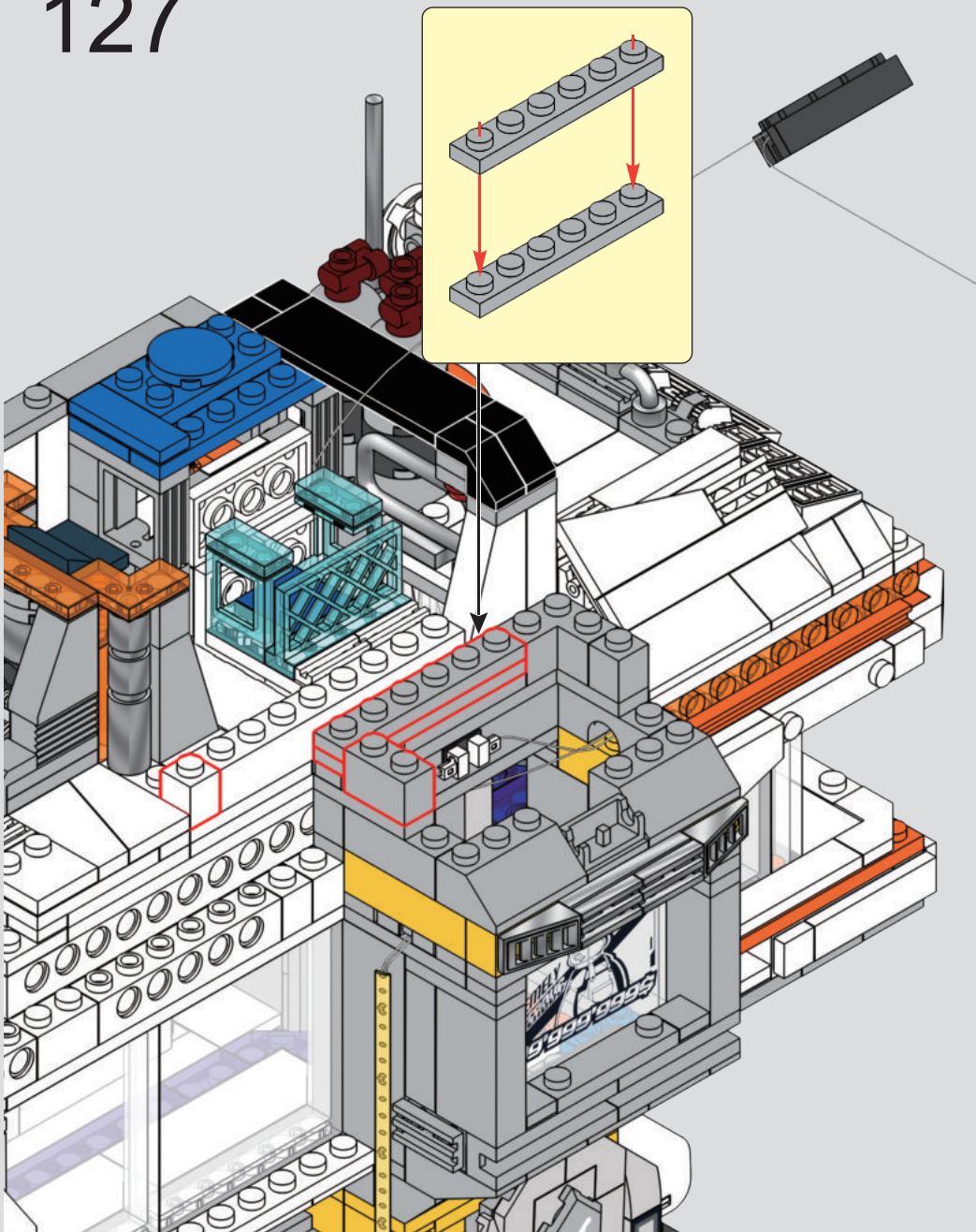

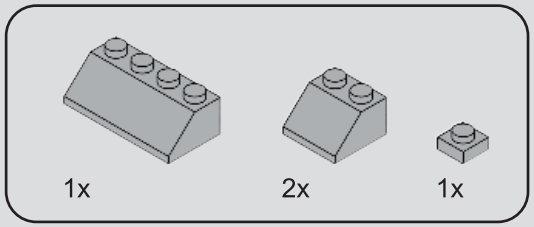

128

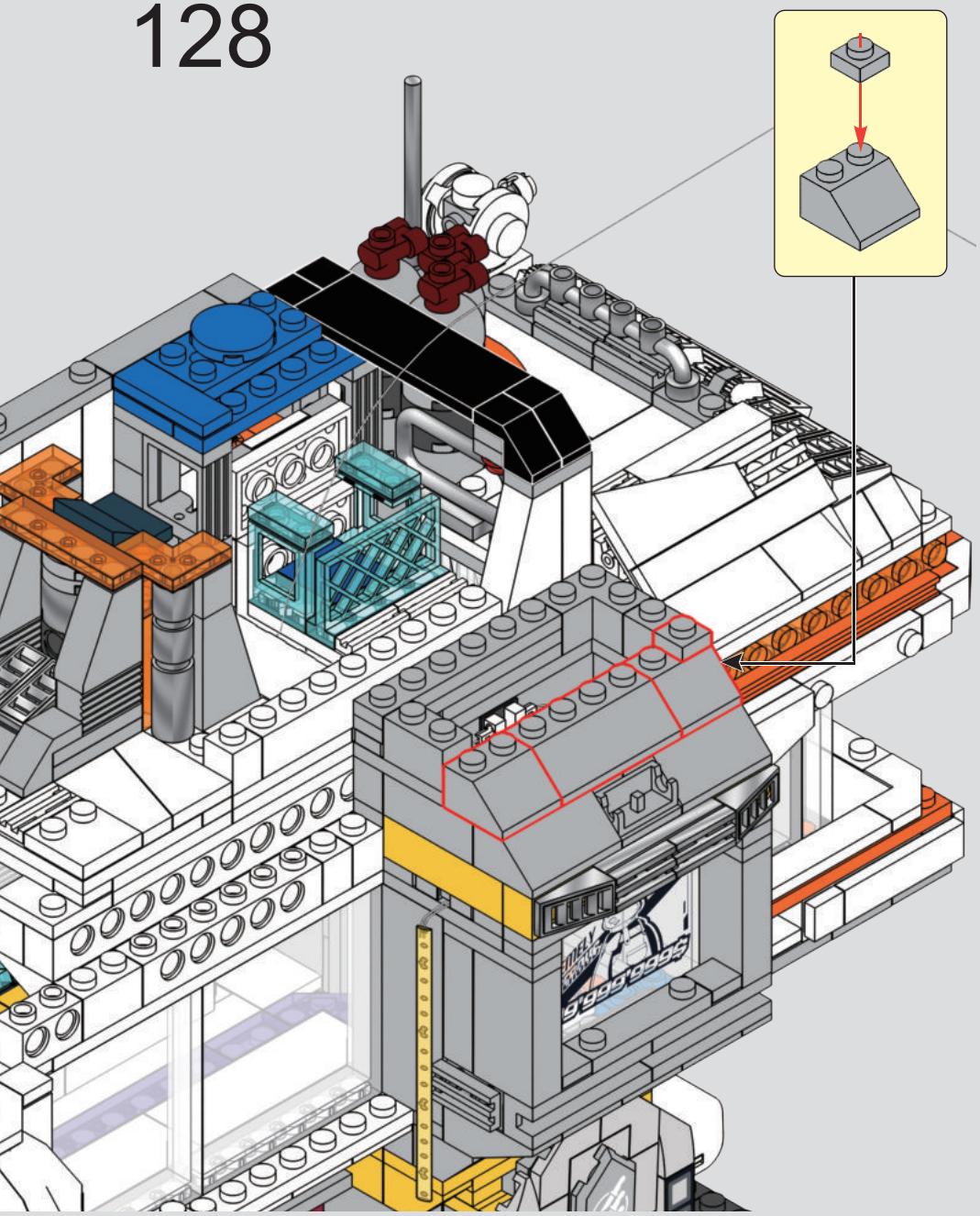

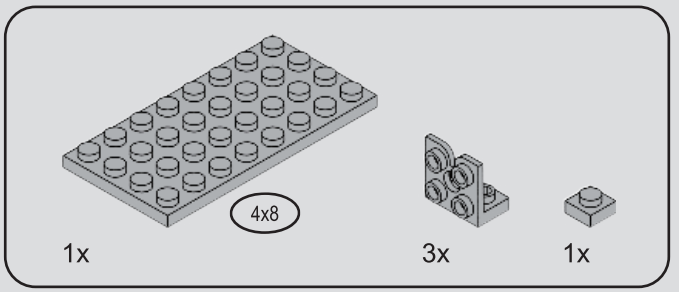

129

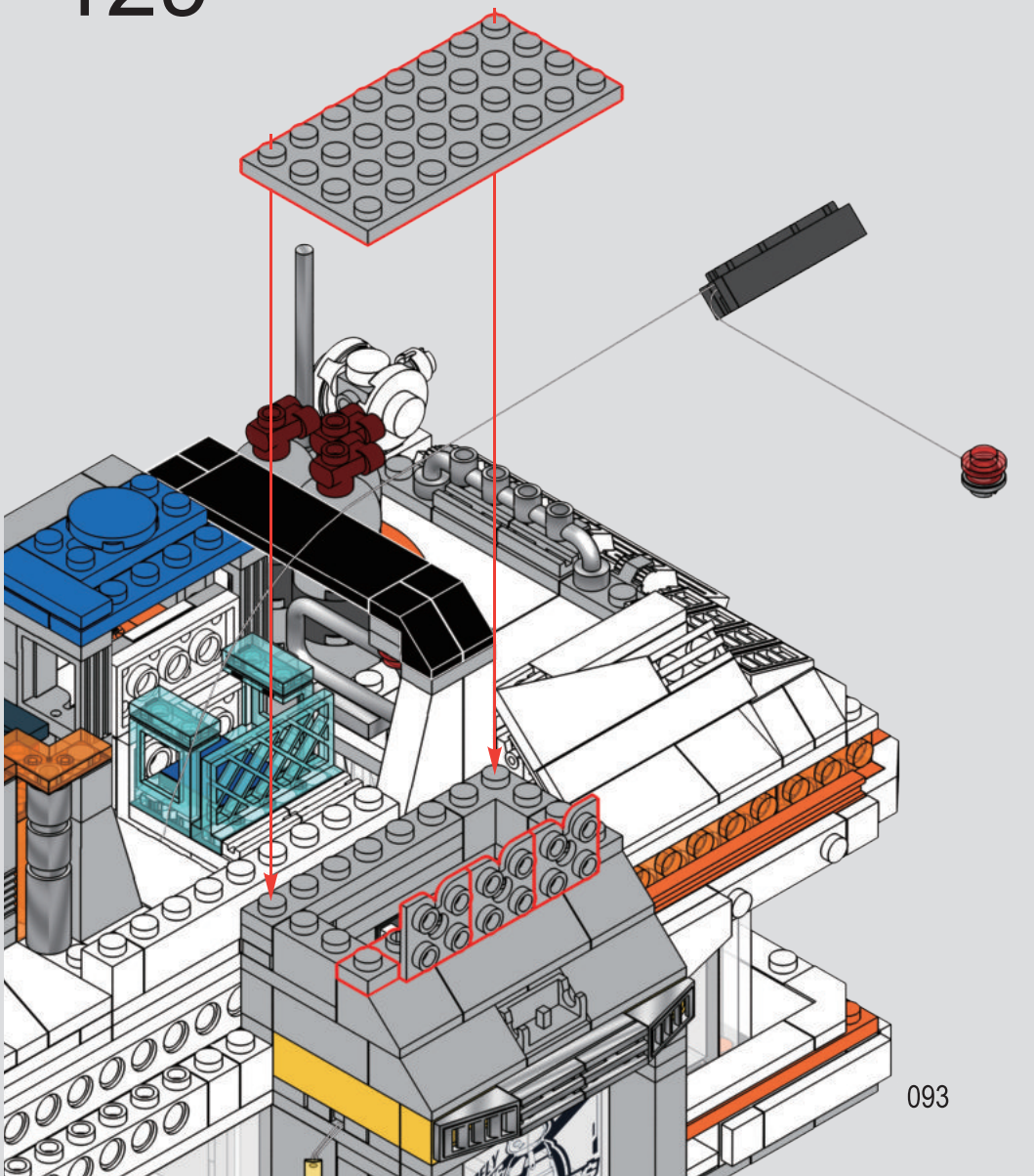

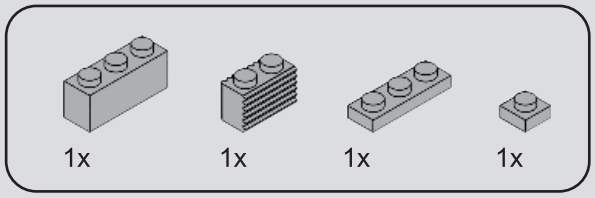

130

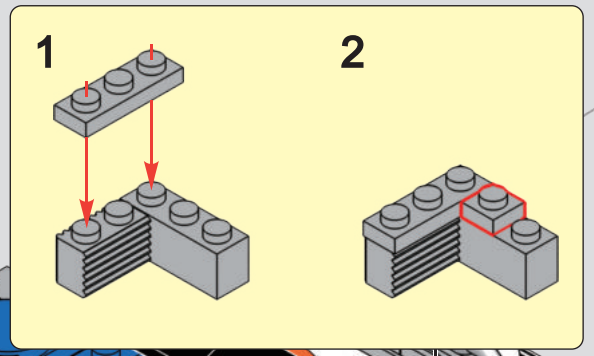

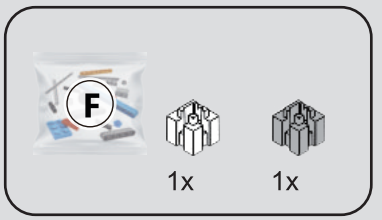

131

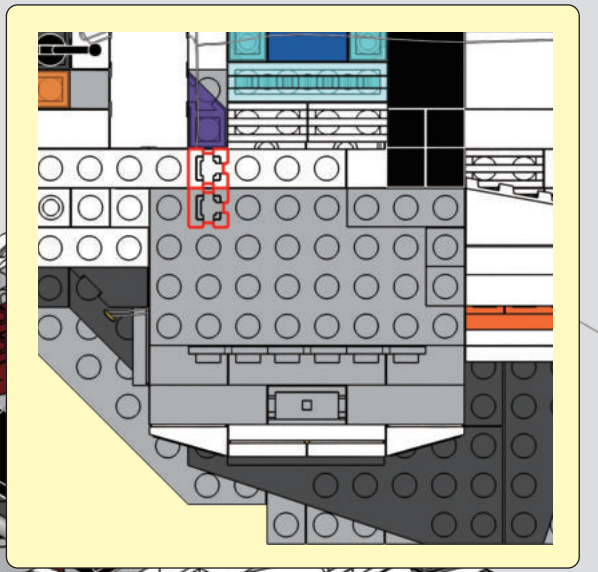

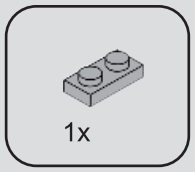

132

1

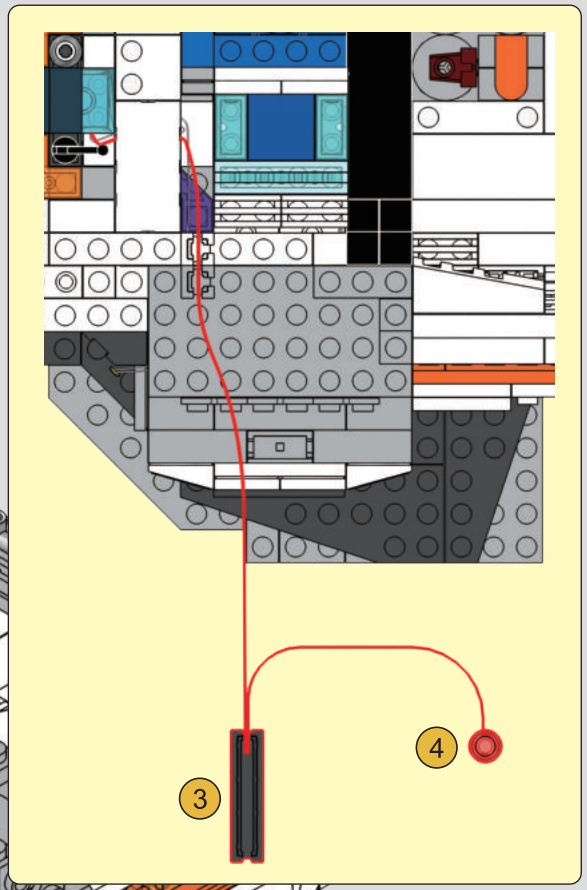

2

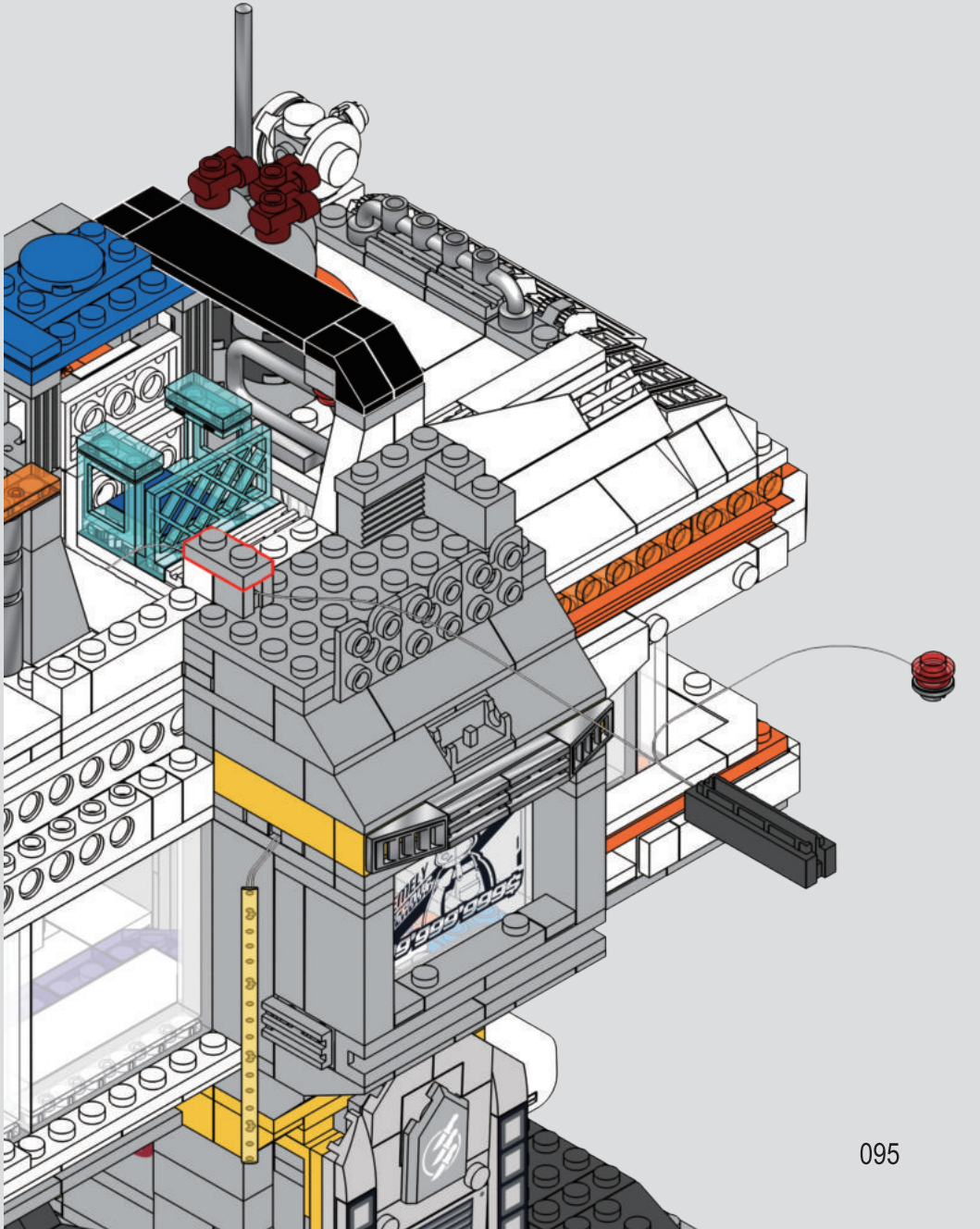

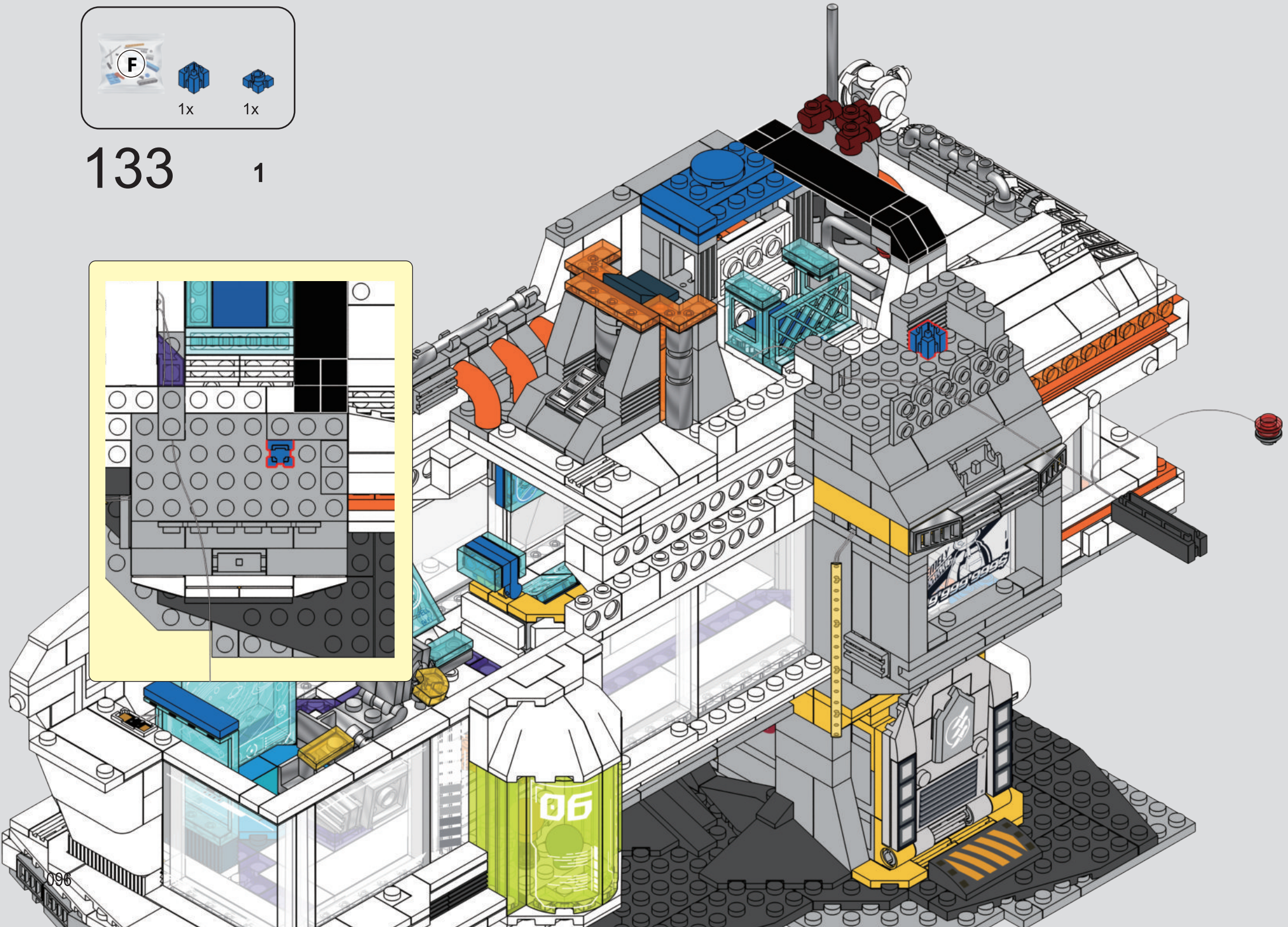
F
1x
1x
133
1
06

3

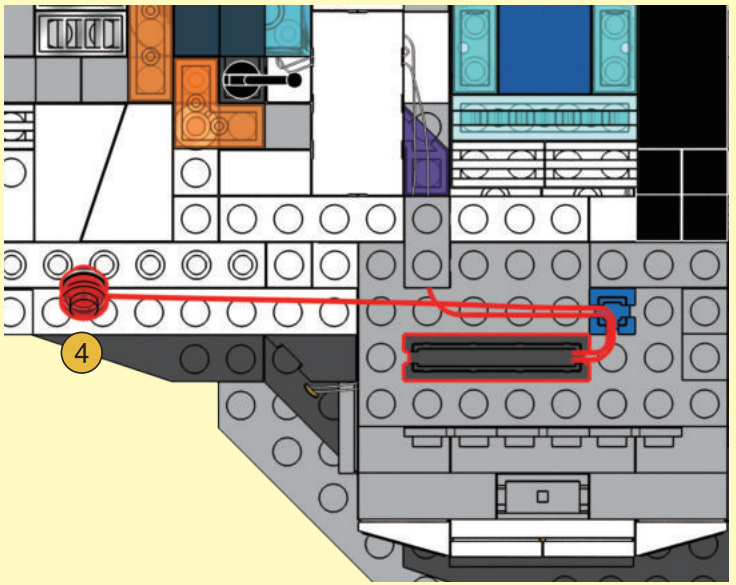

4

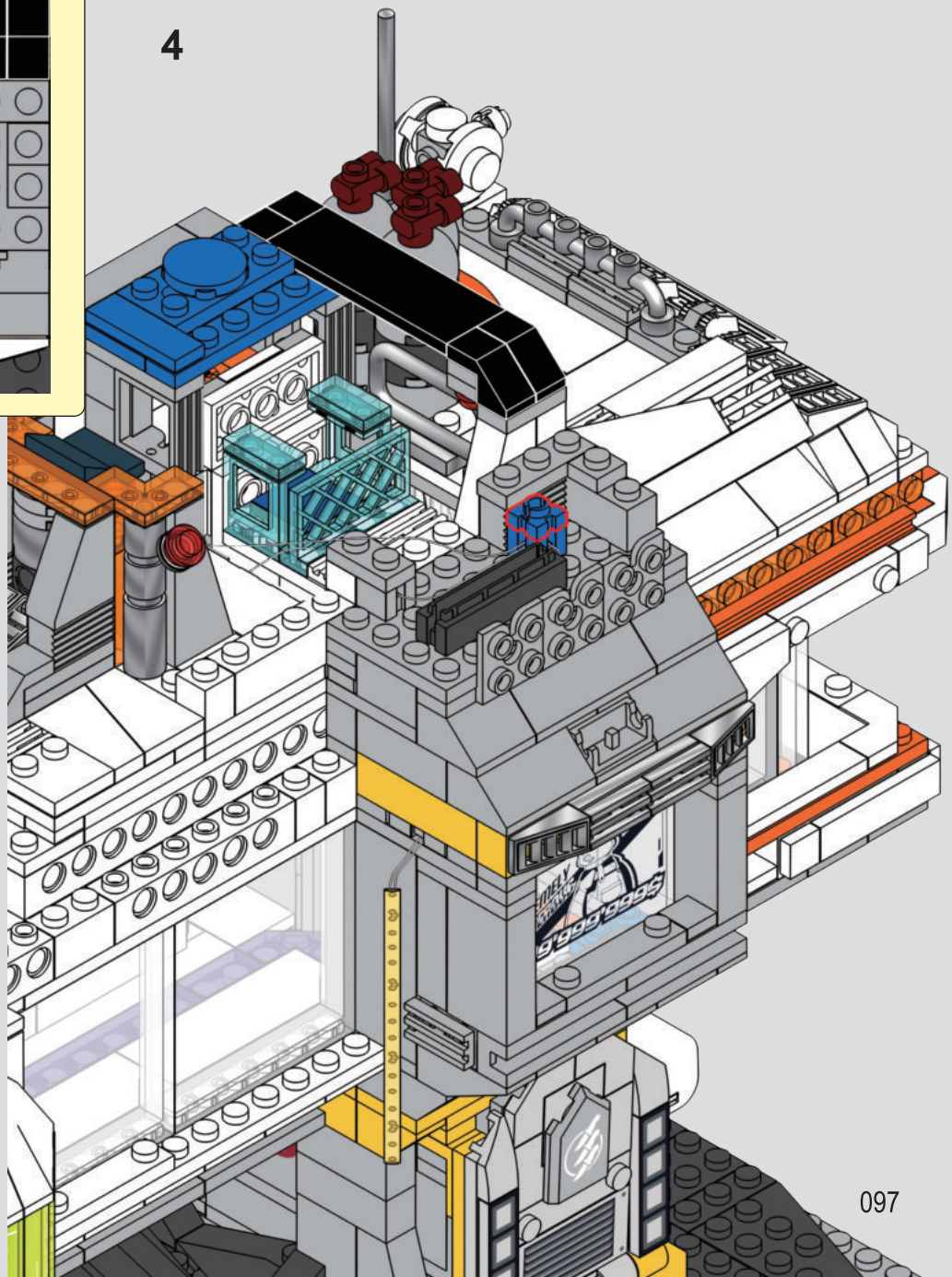

134

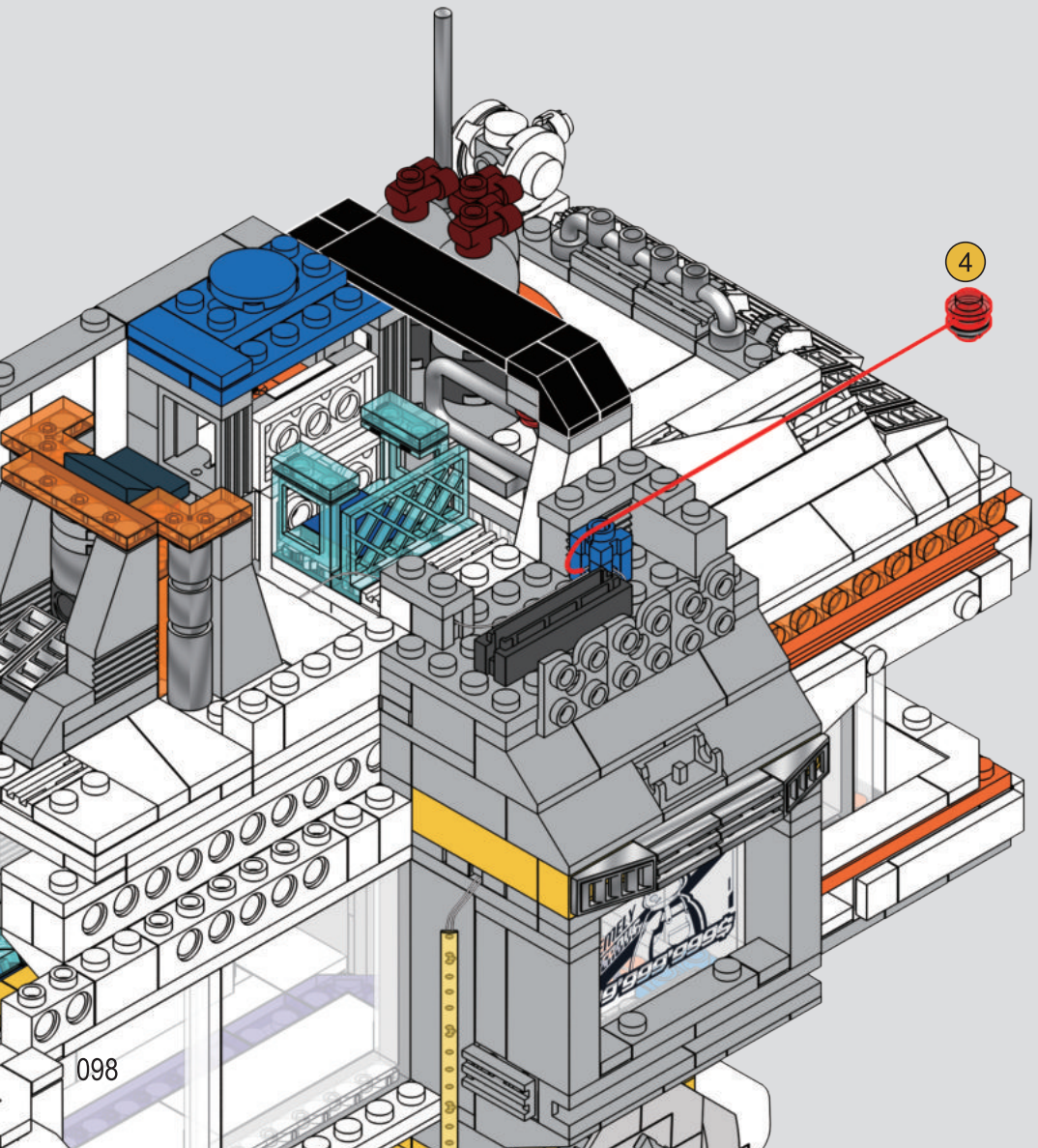

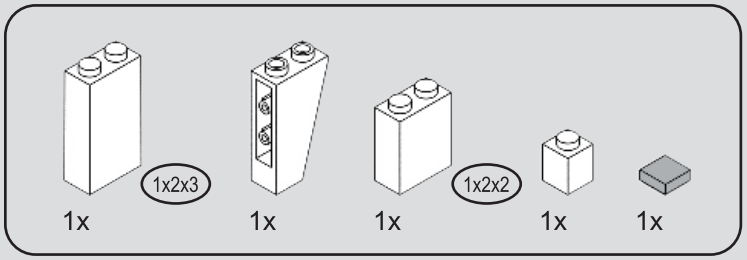

135

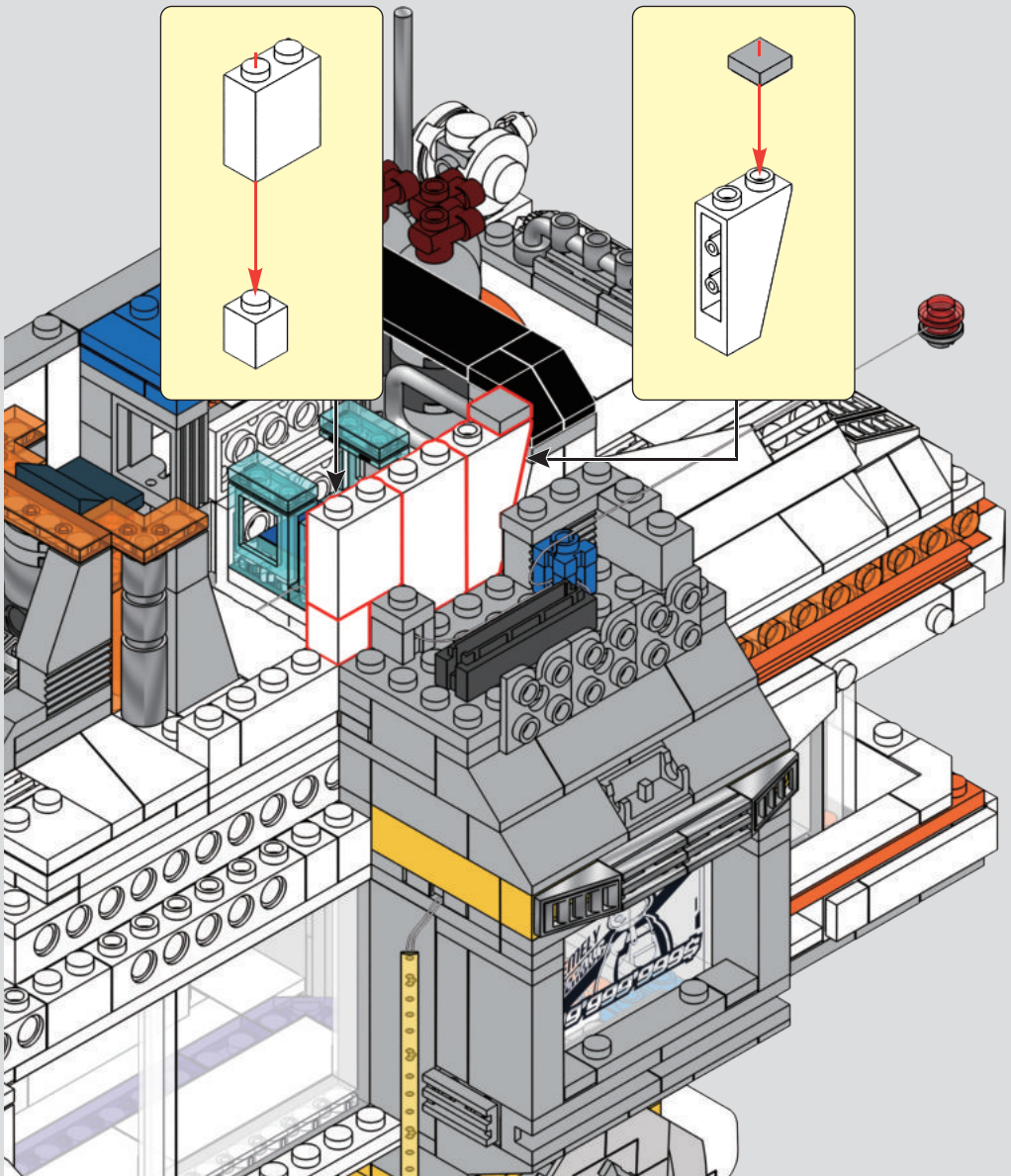

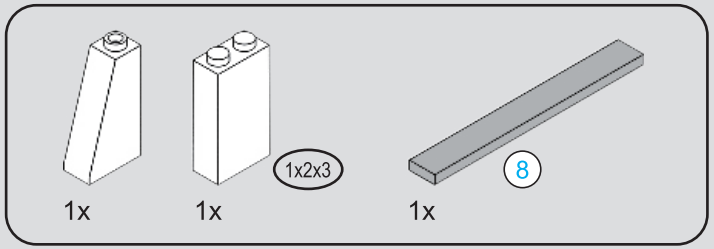

136

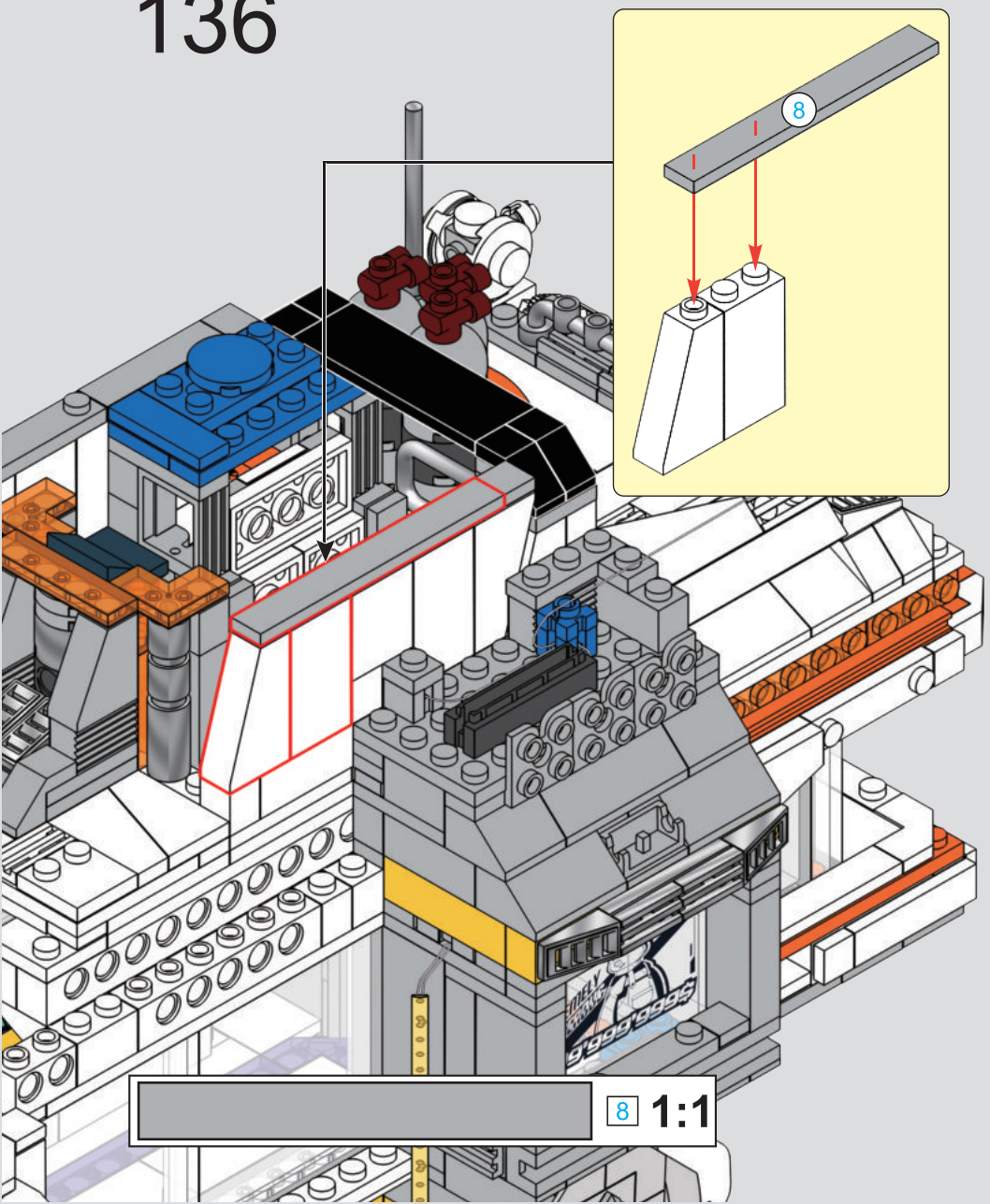

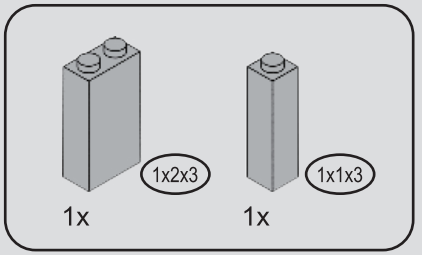

137

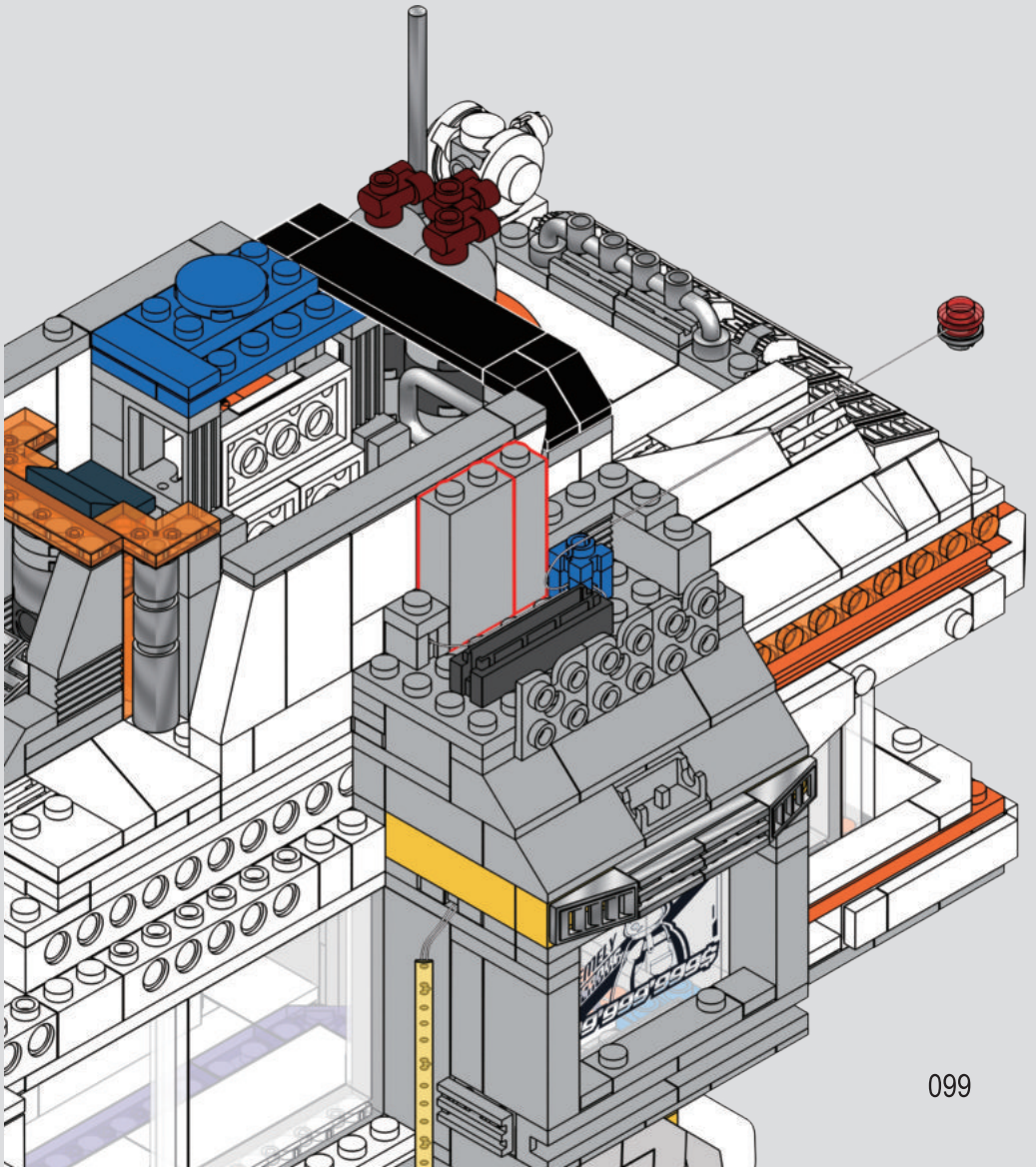

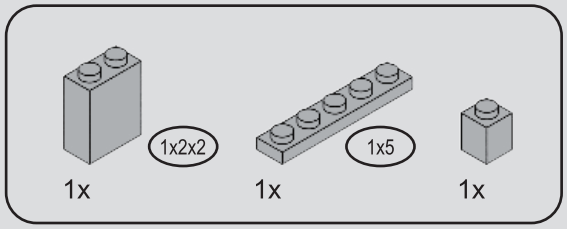

138

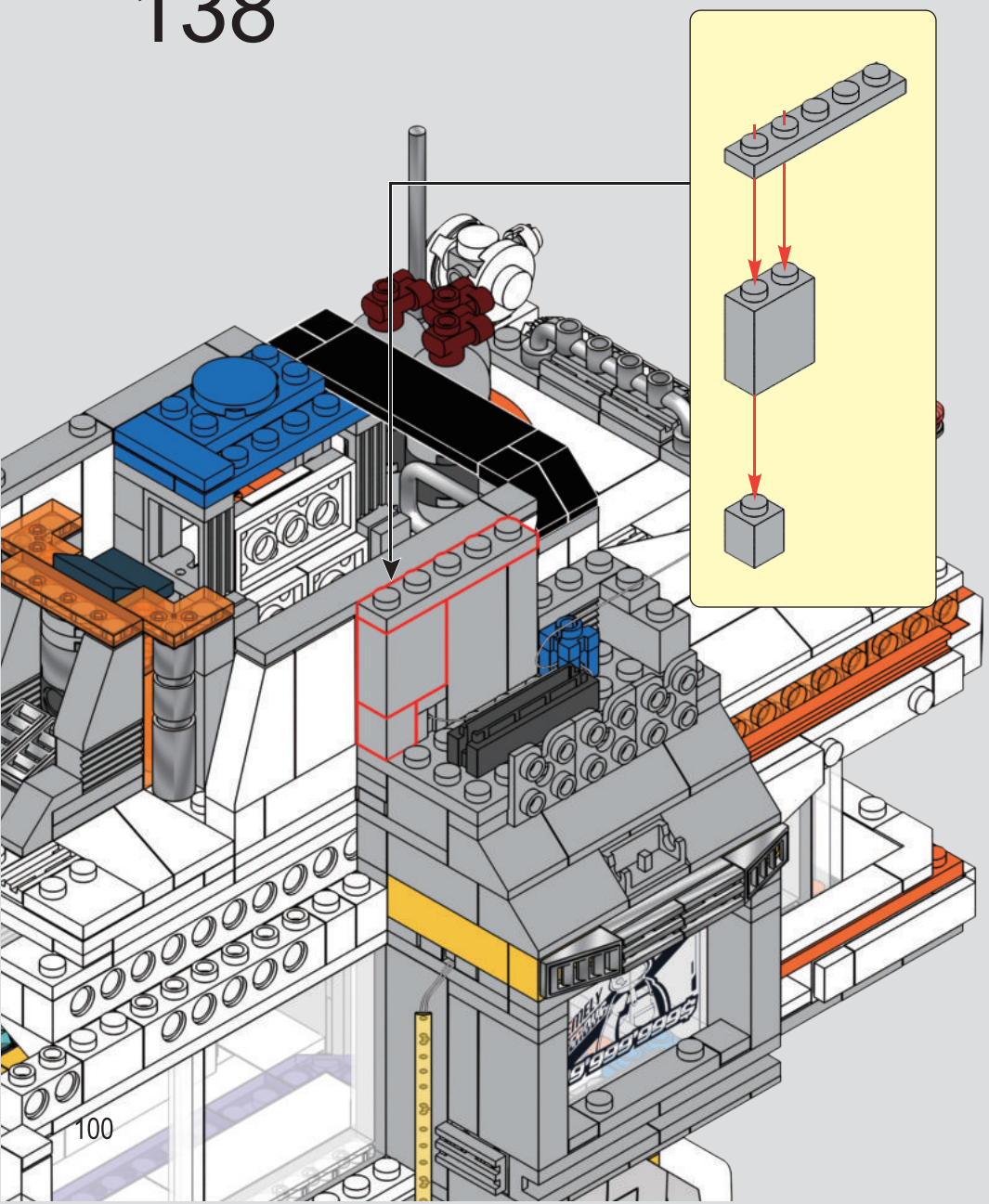

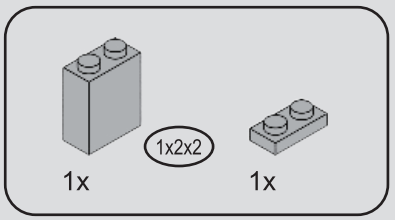

139

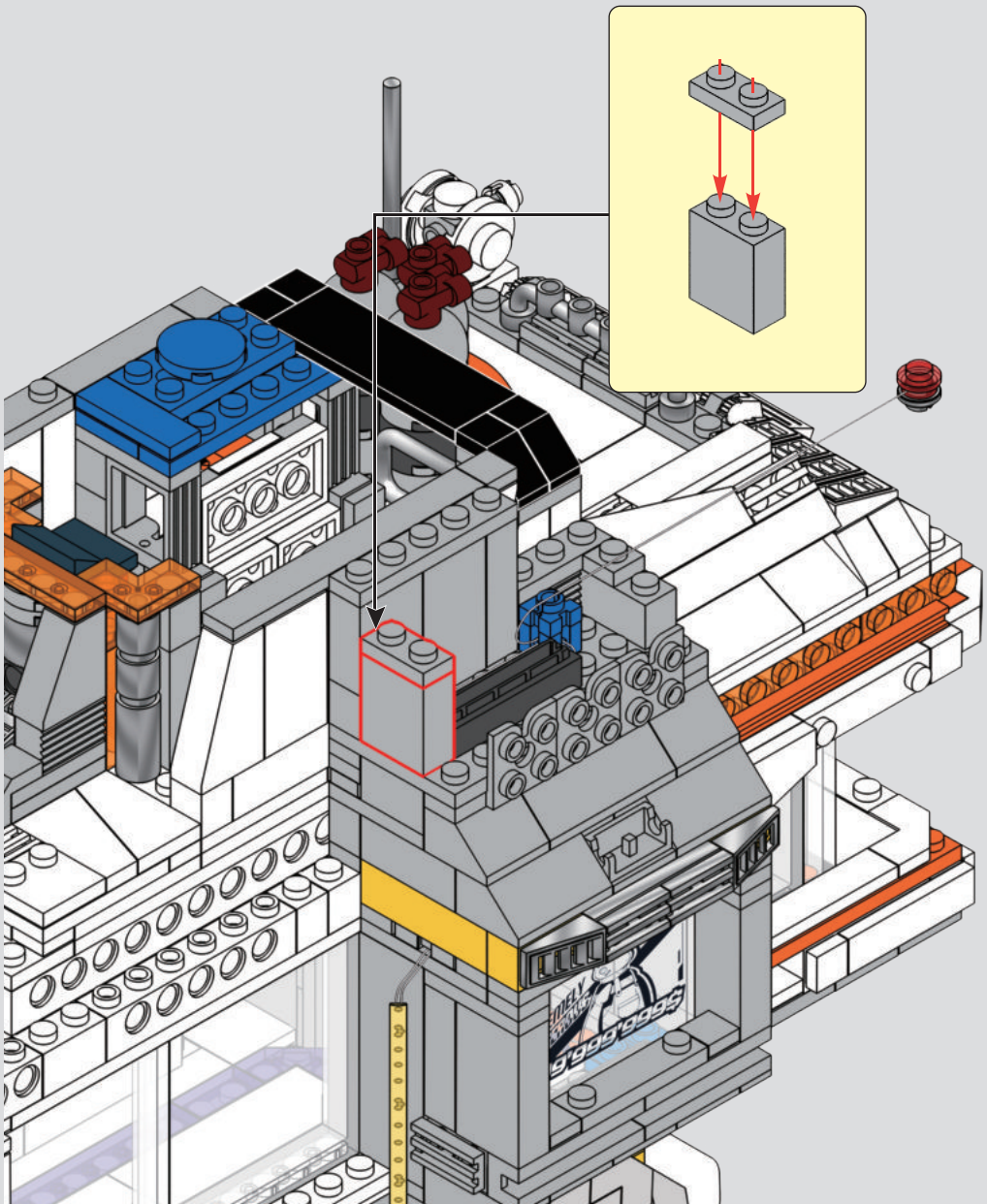

140

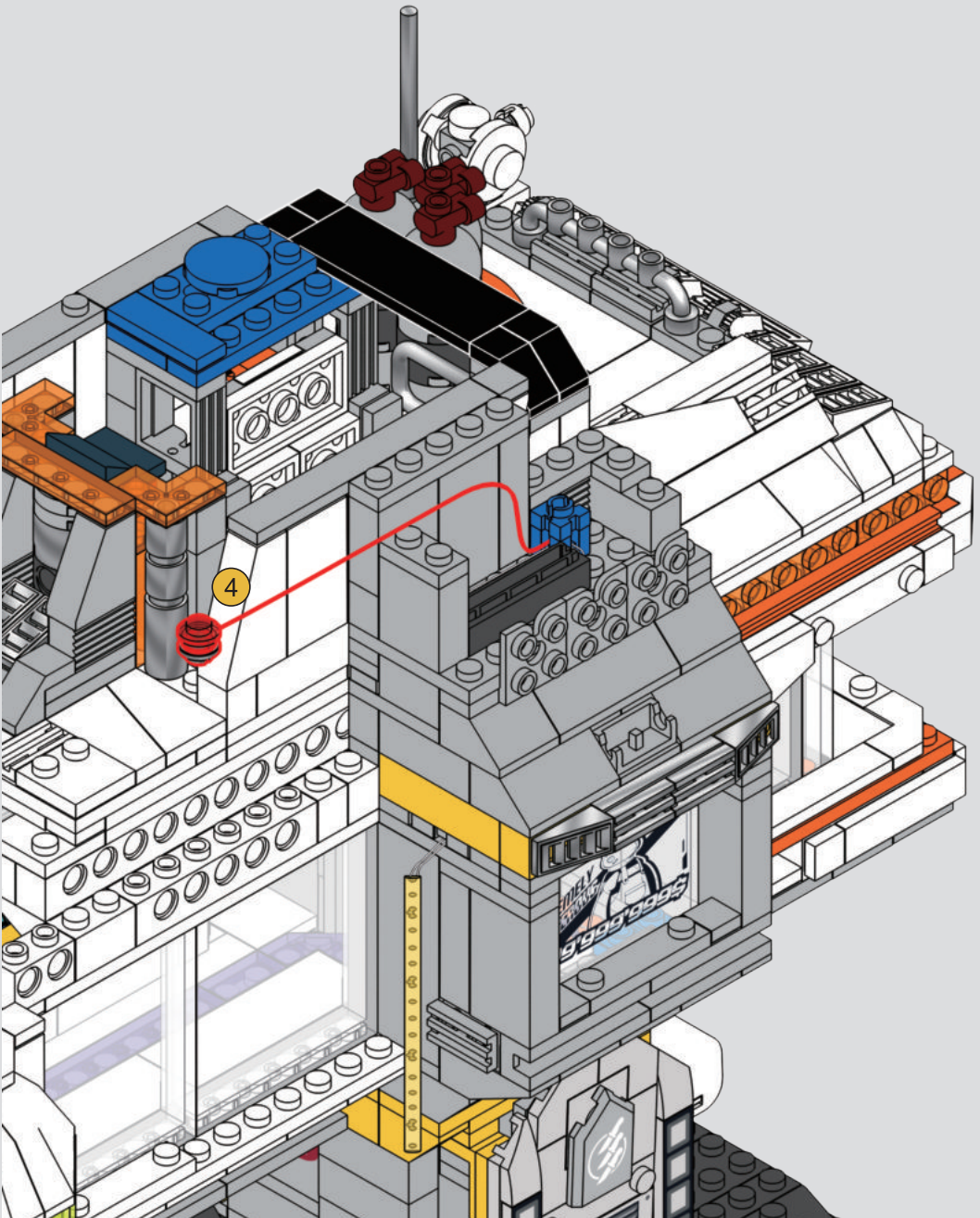

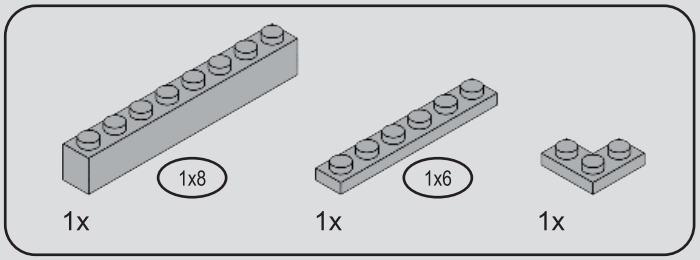

141

1

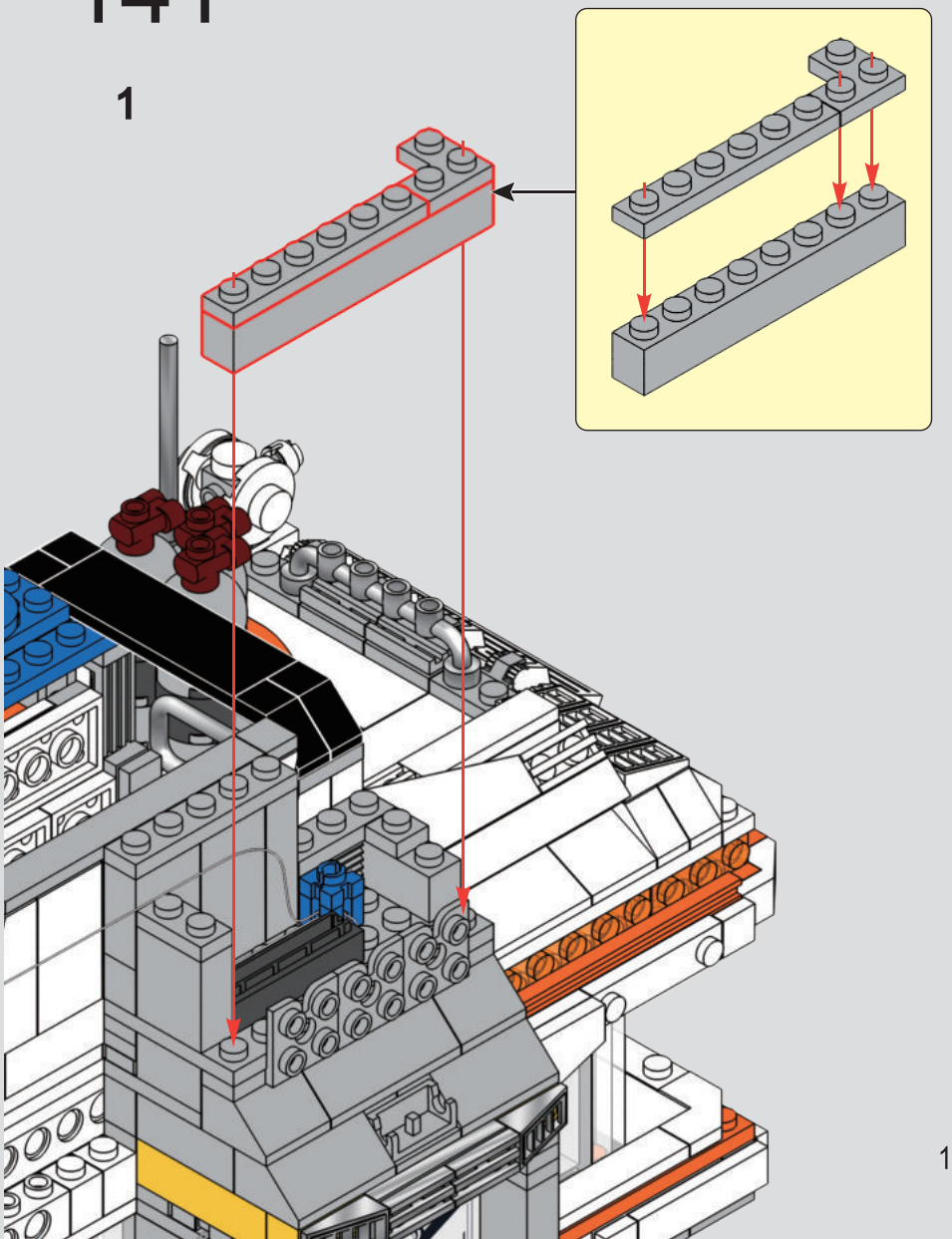

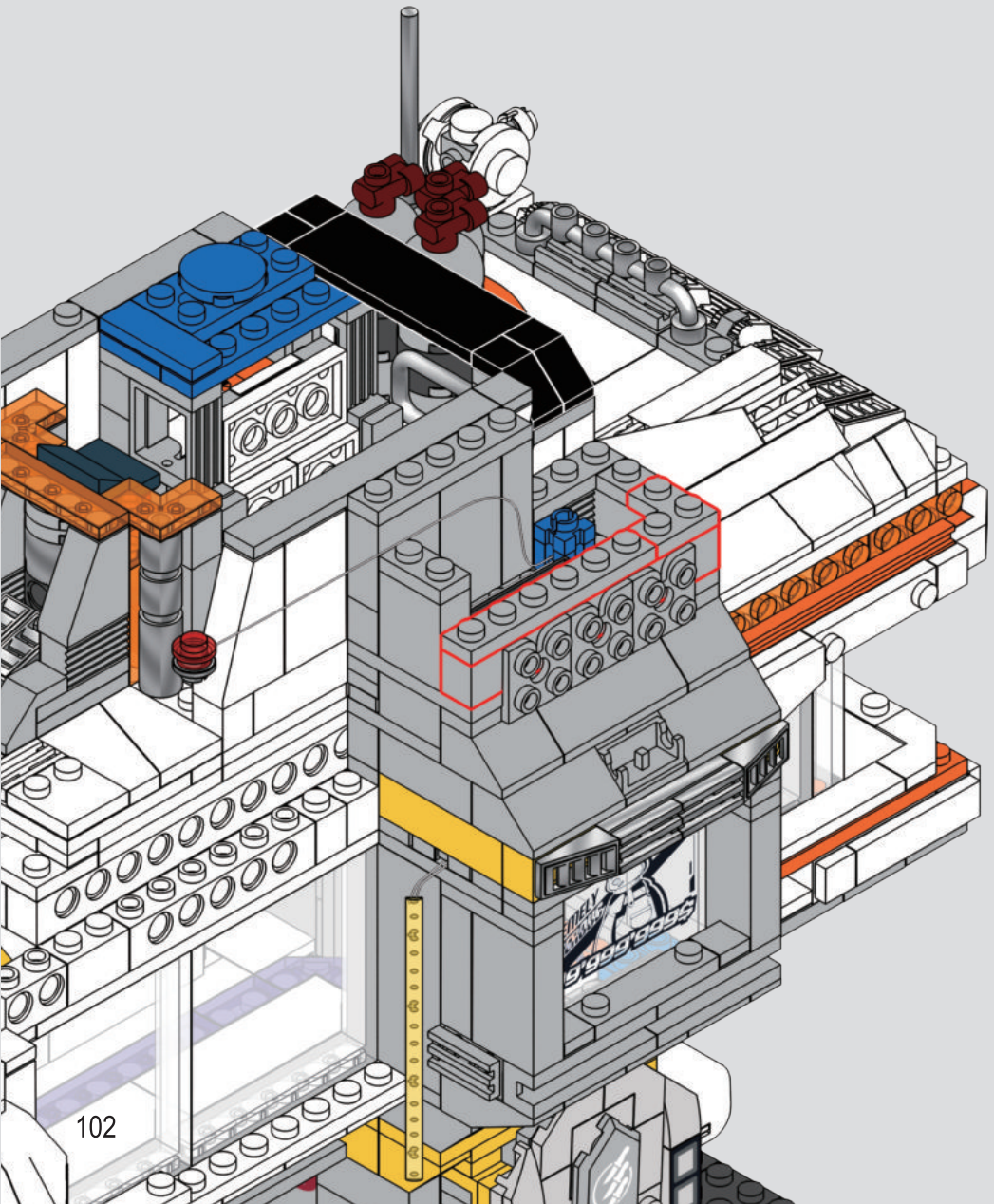

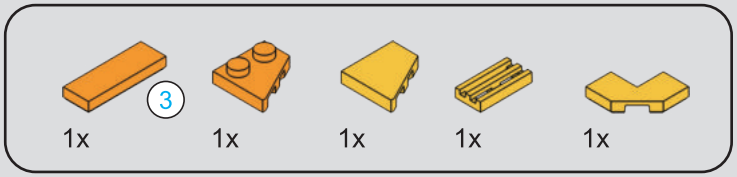

142

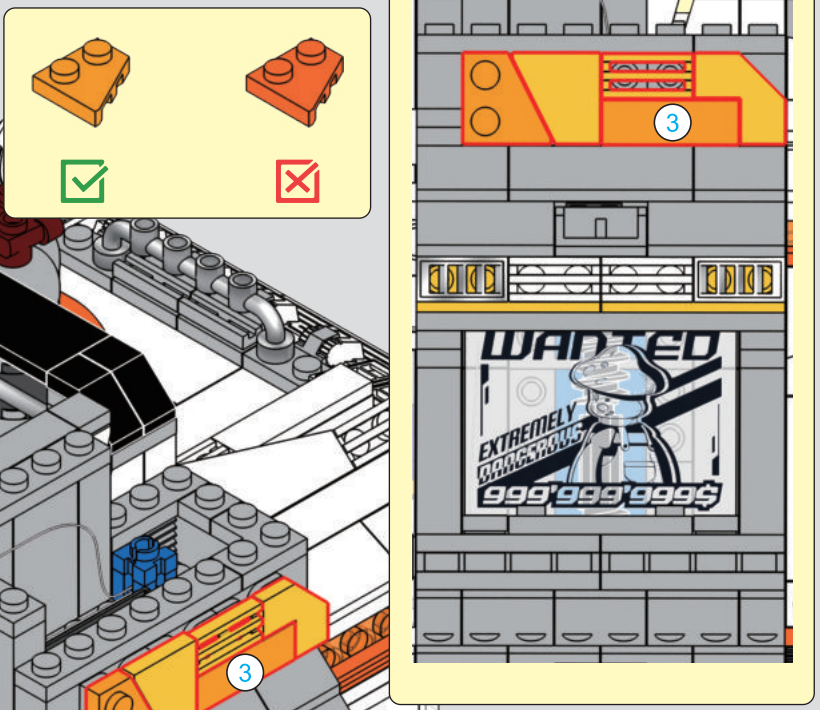

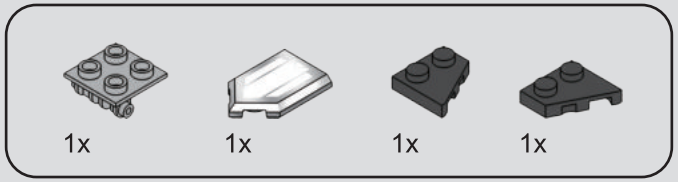

143

1

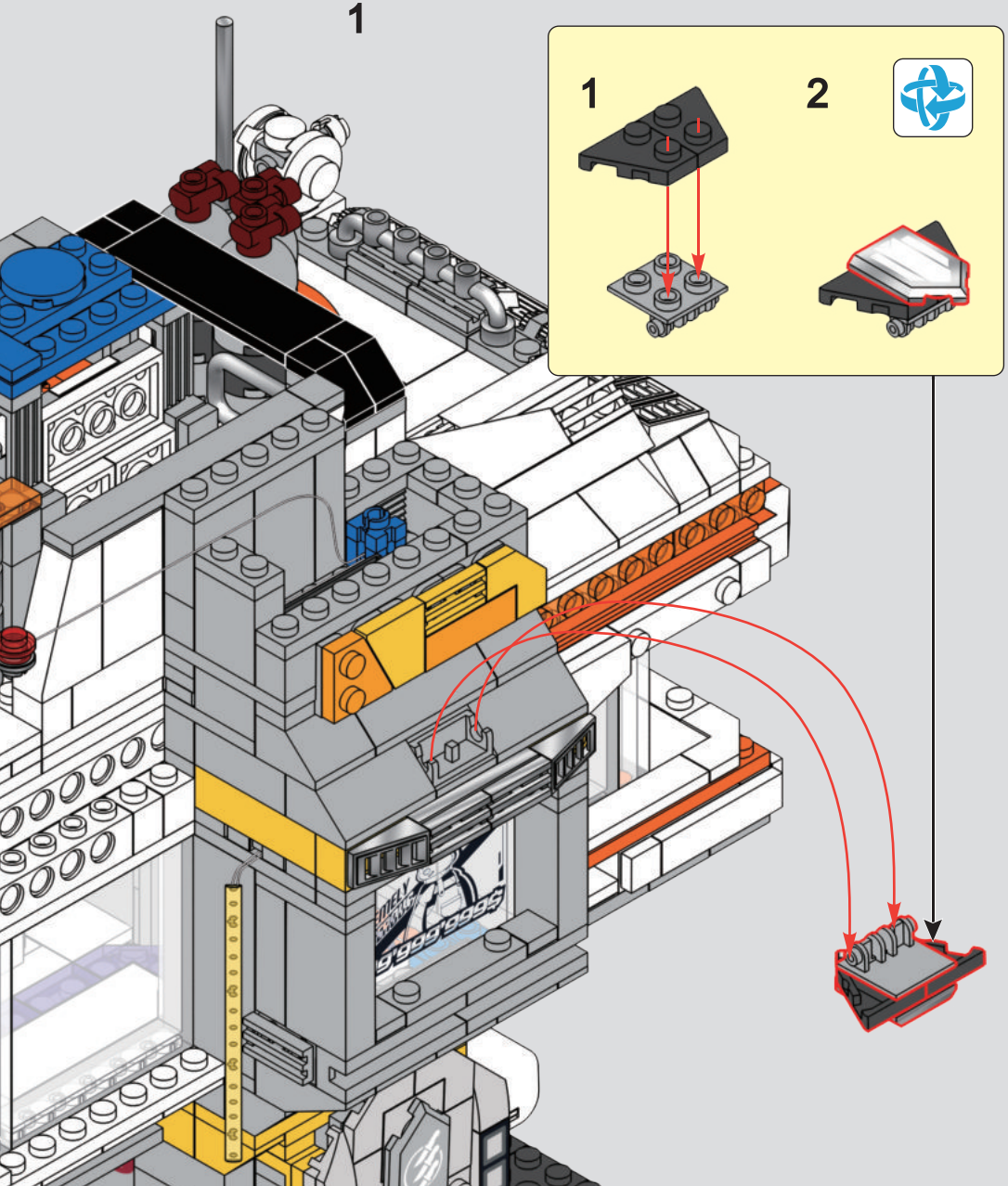

2

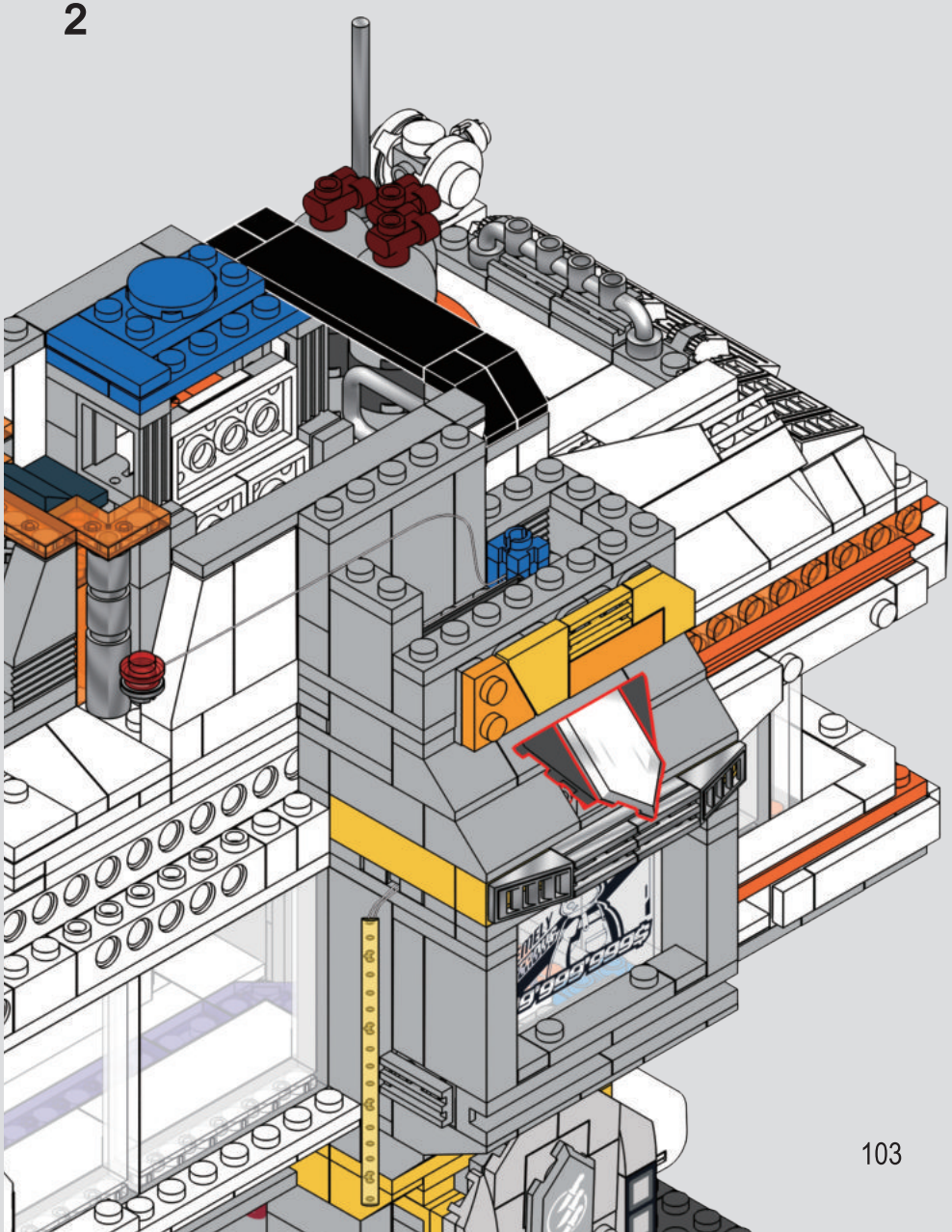

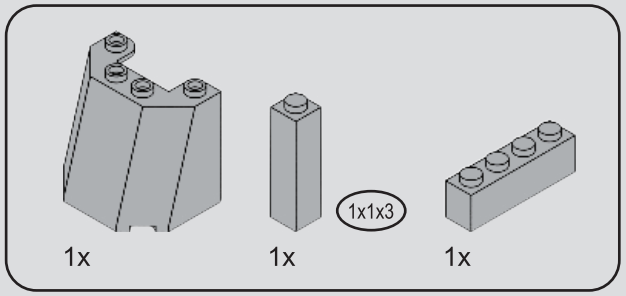

144

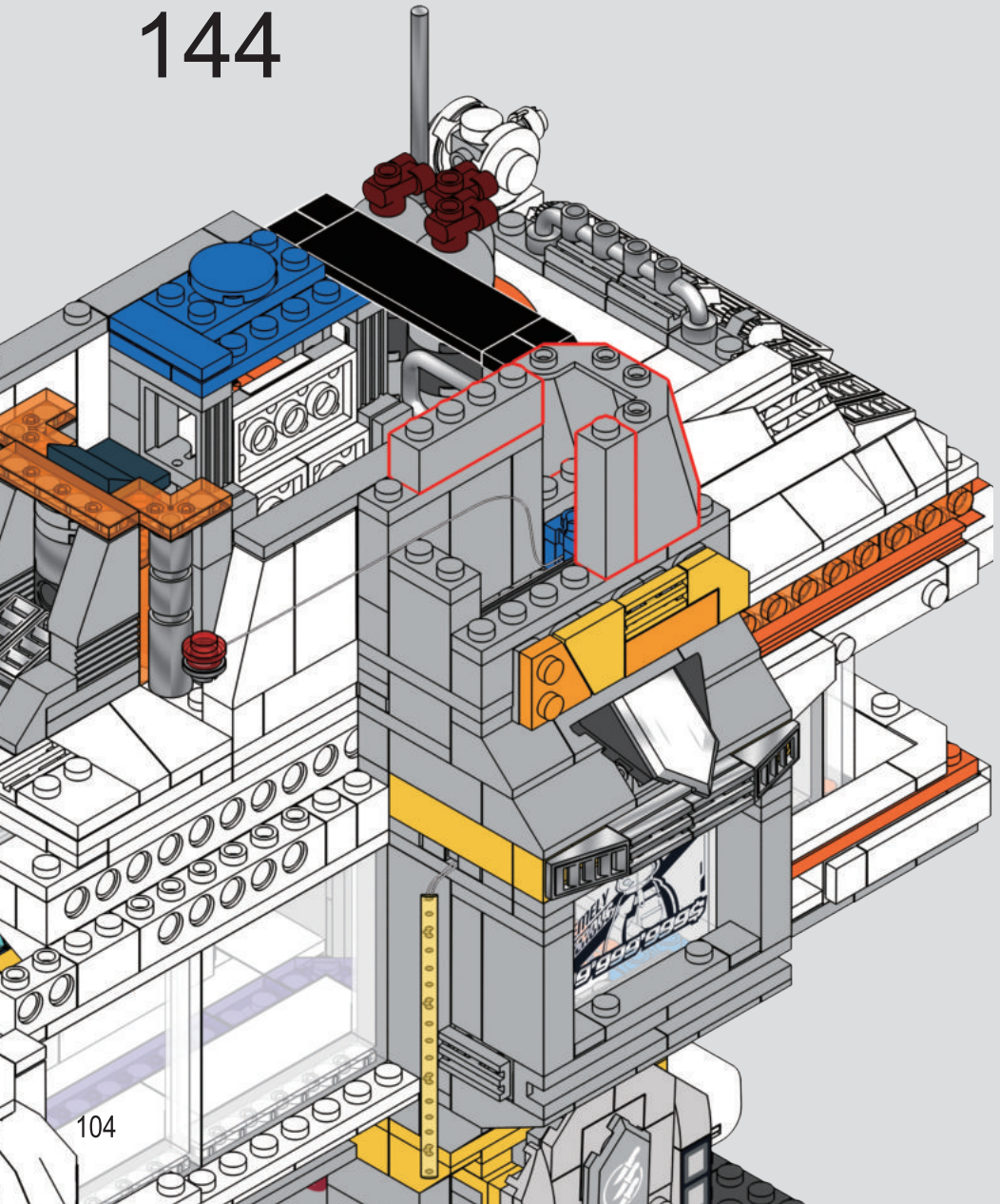



145

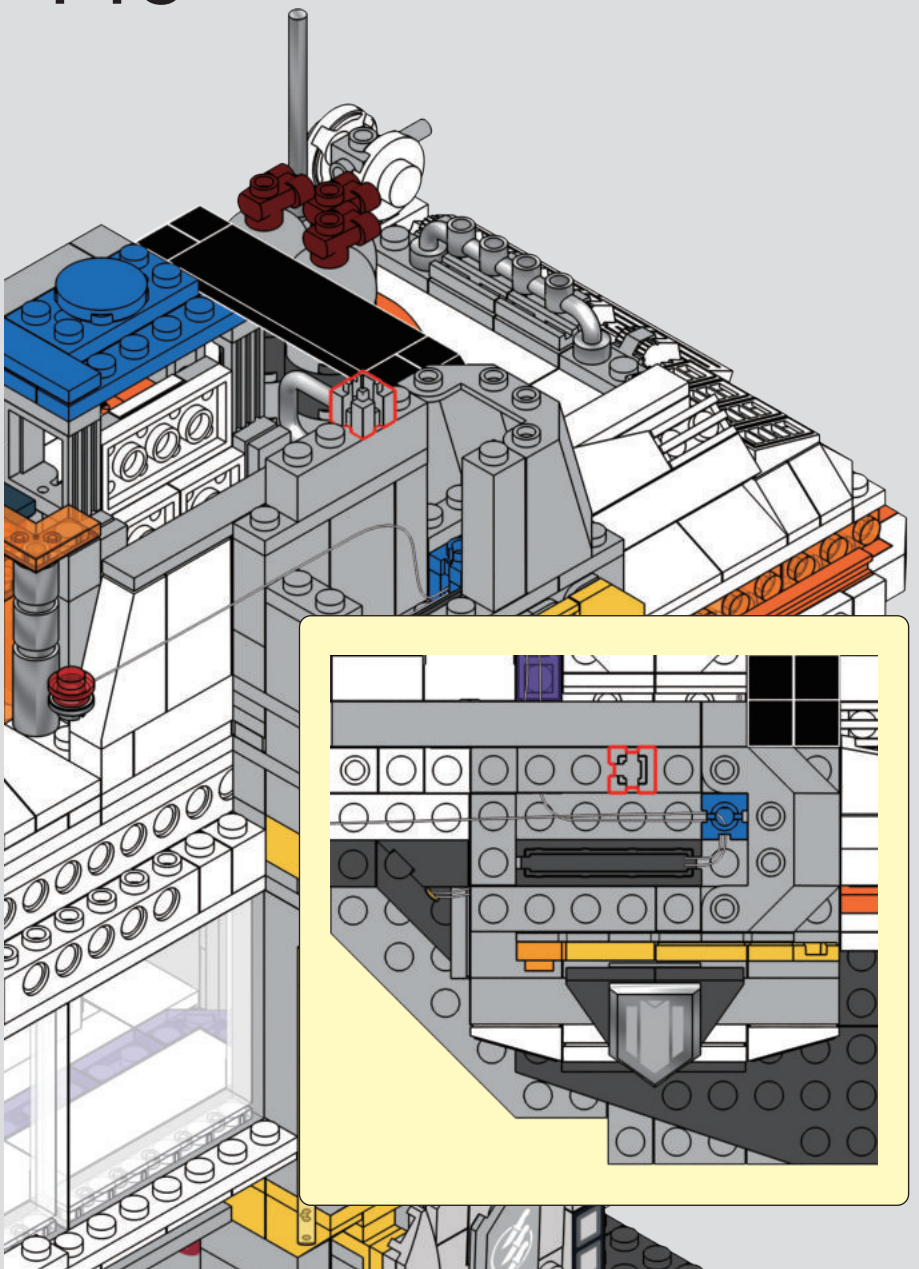

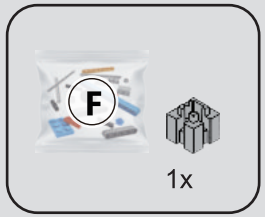

146

1

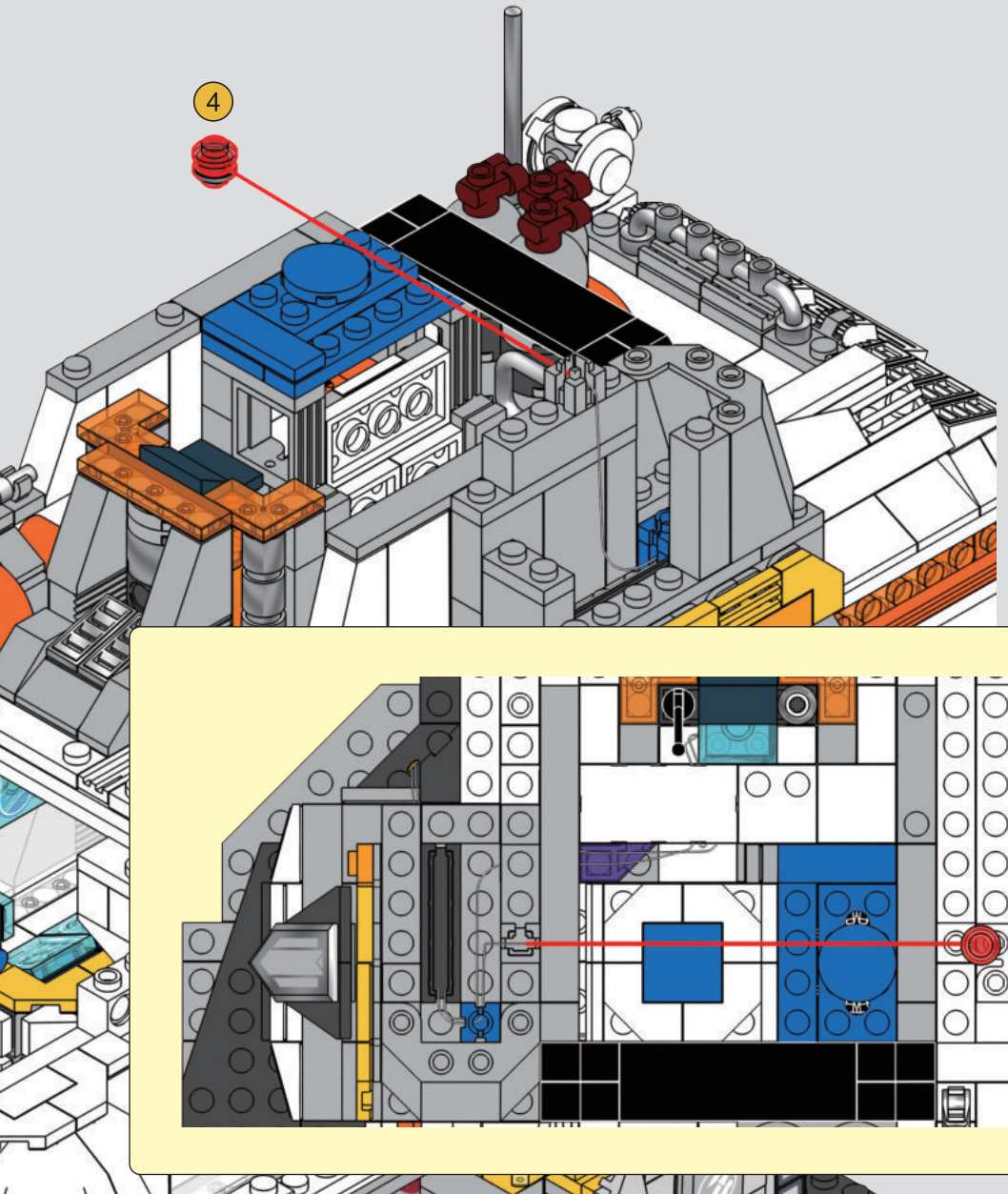

2

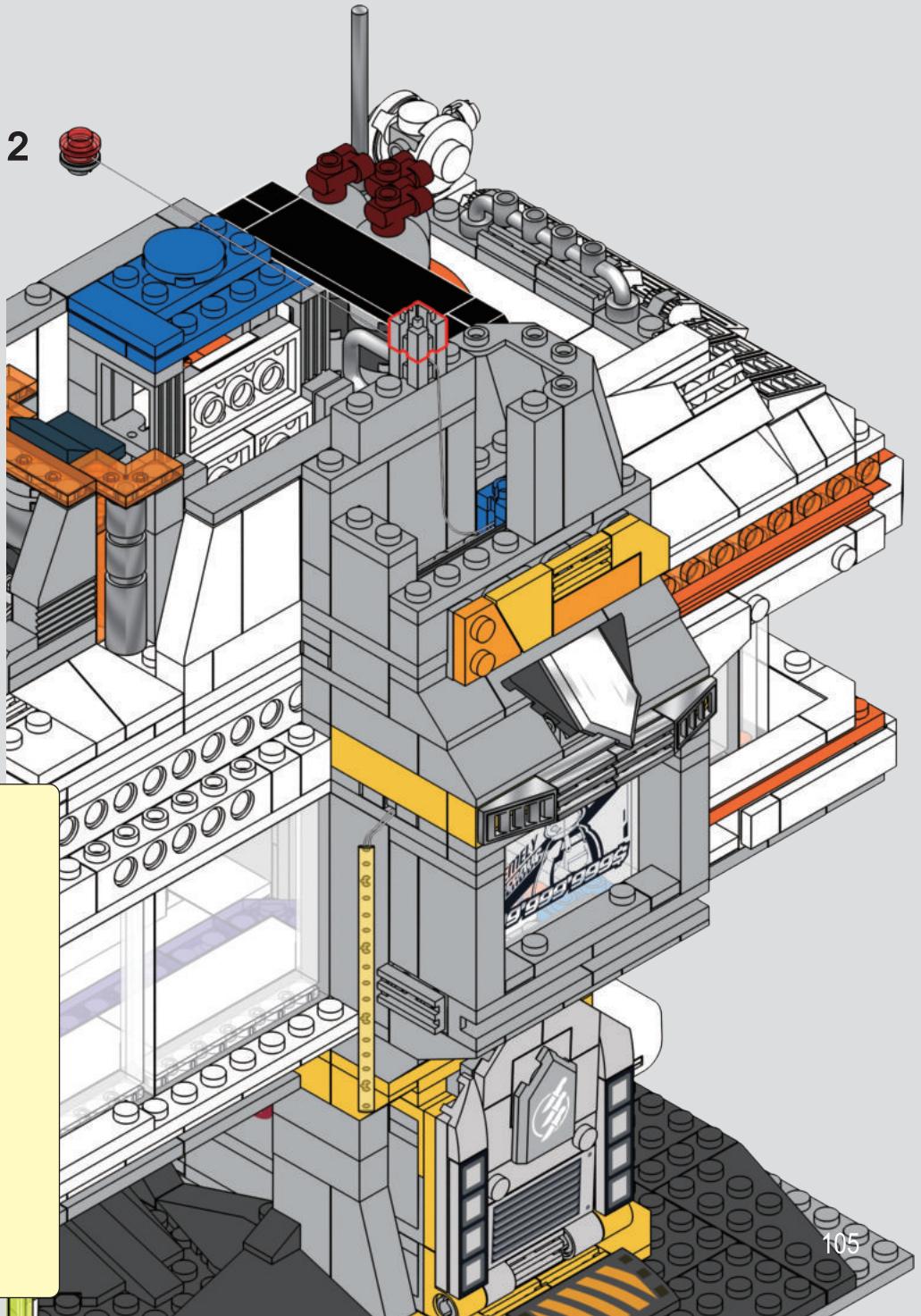

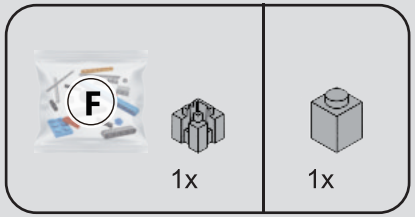

147

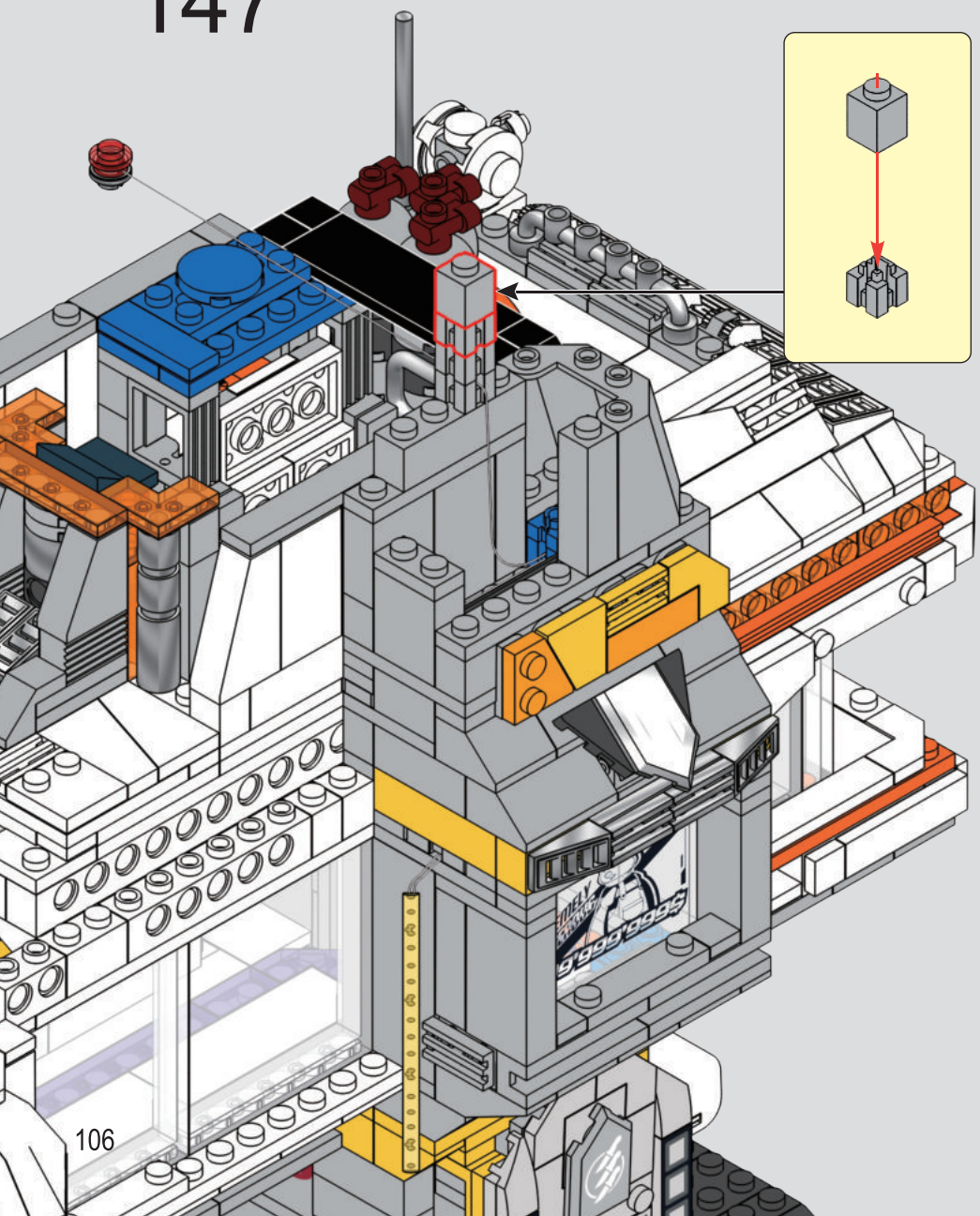

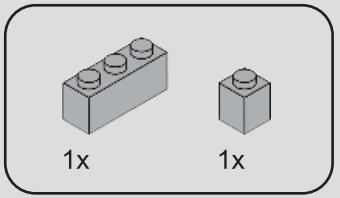

148

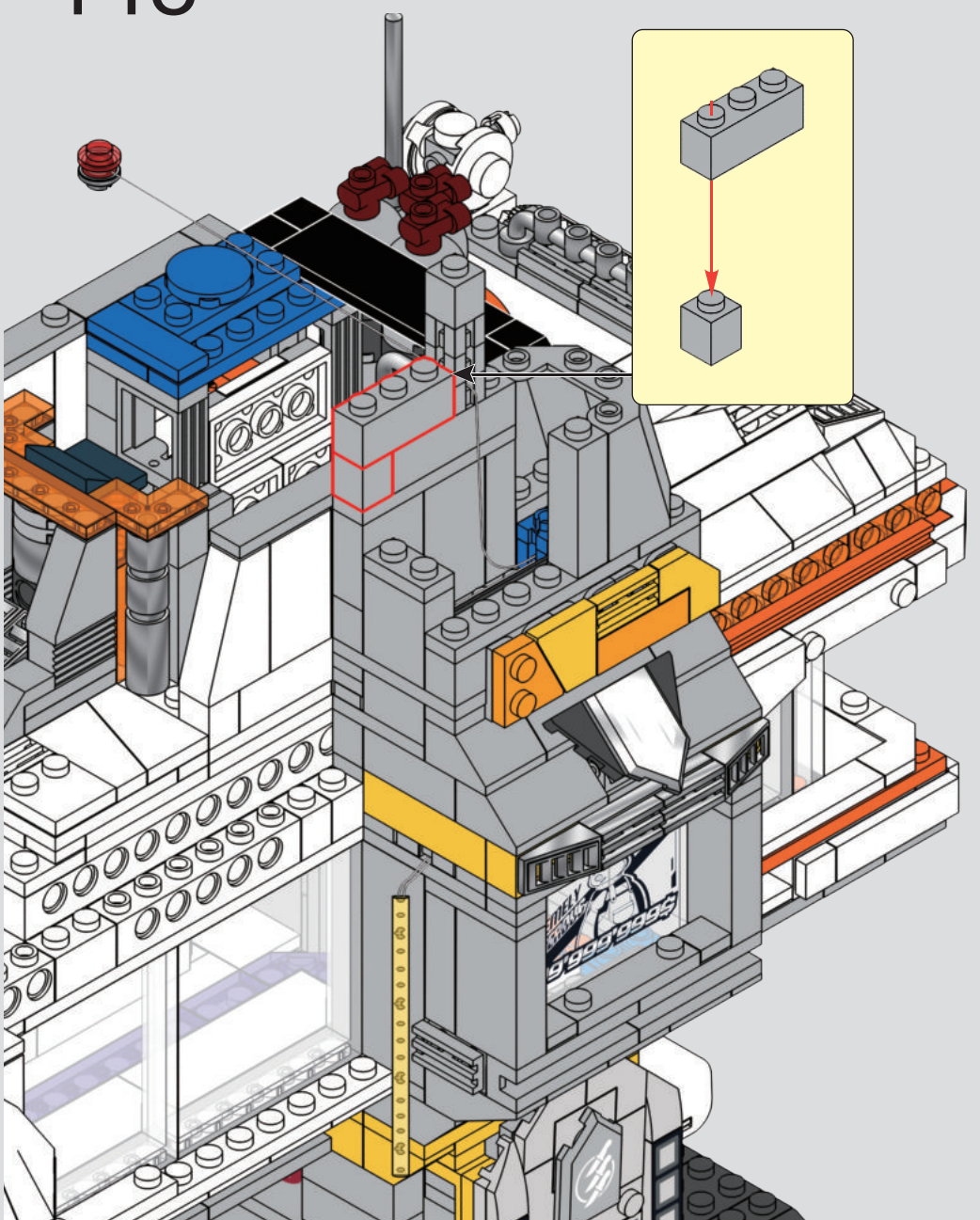

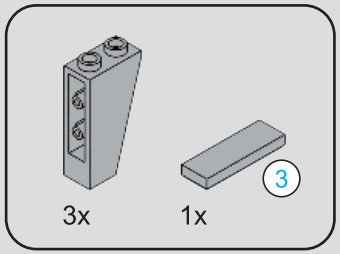

149

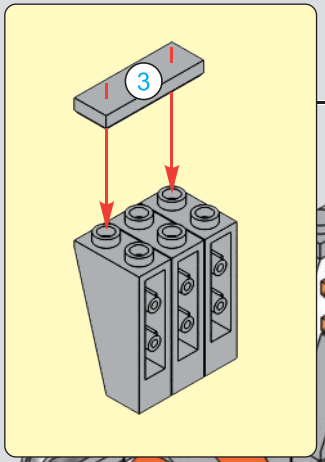

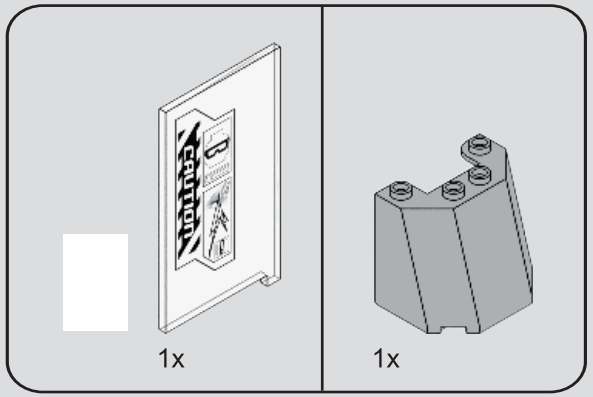

150

1

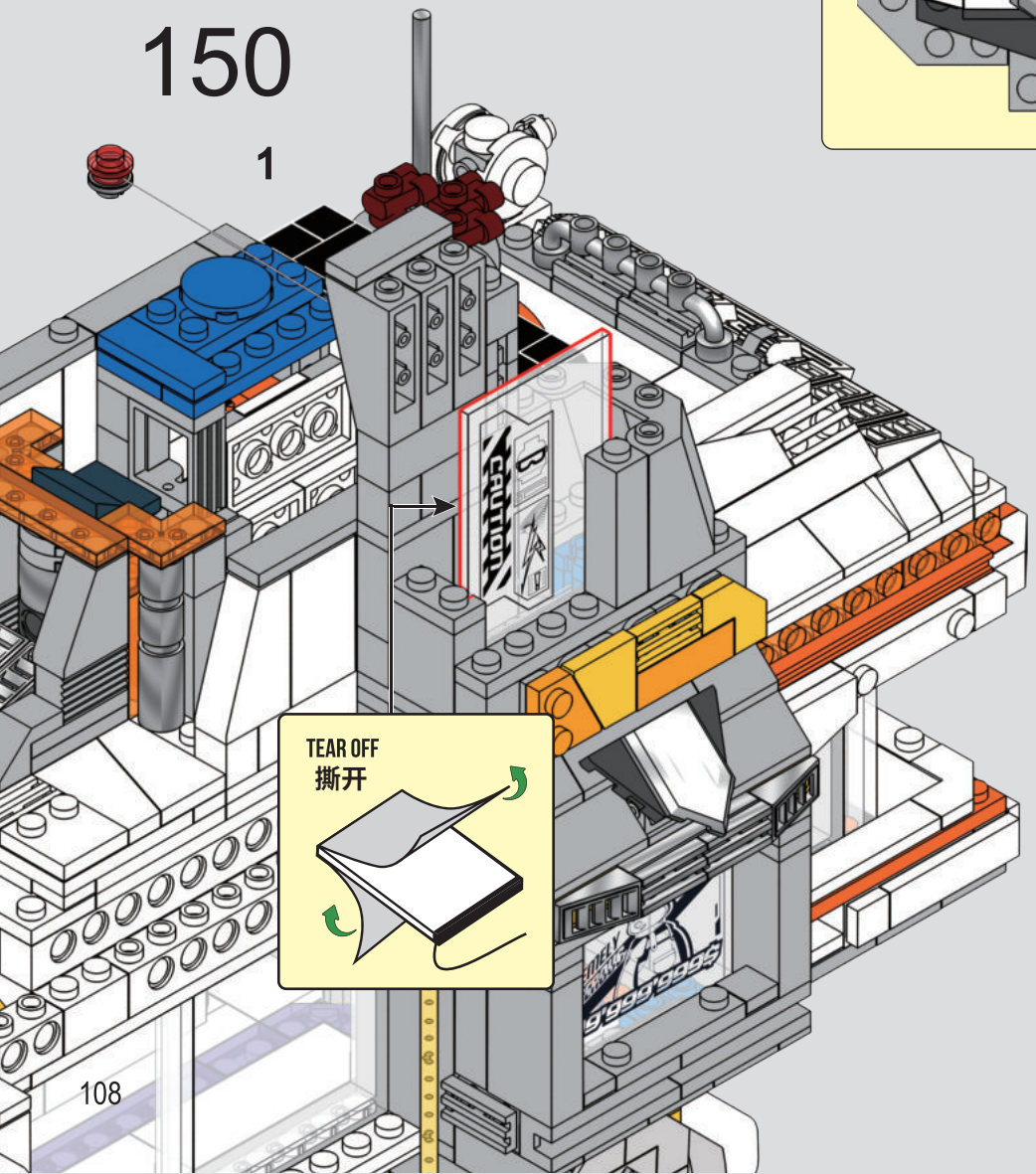

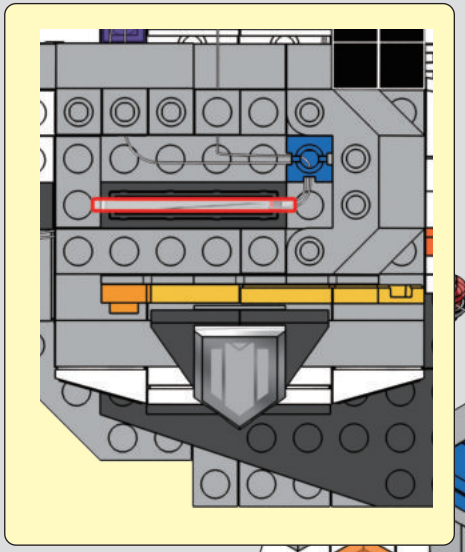

2

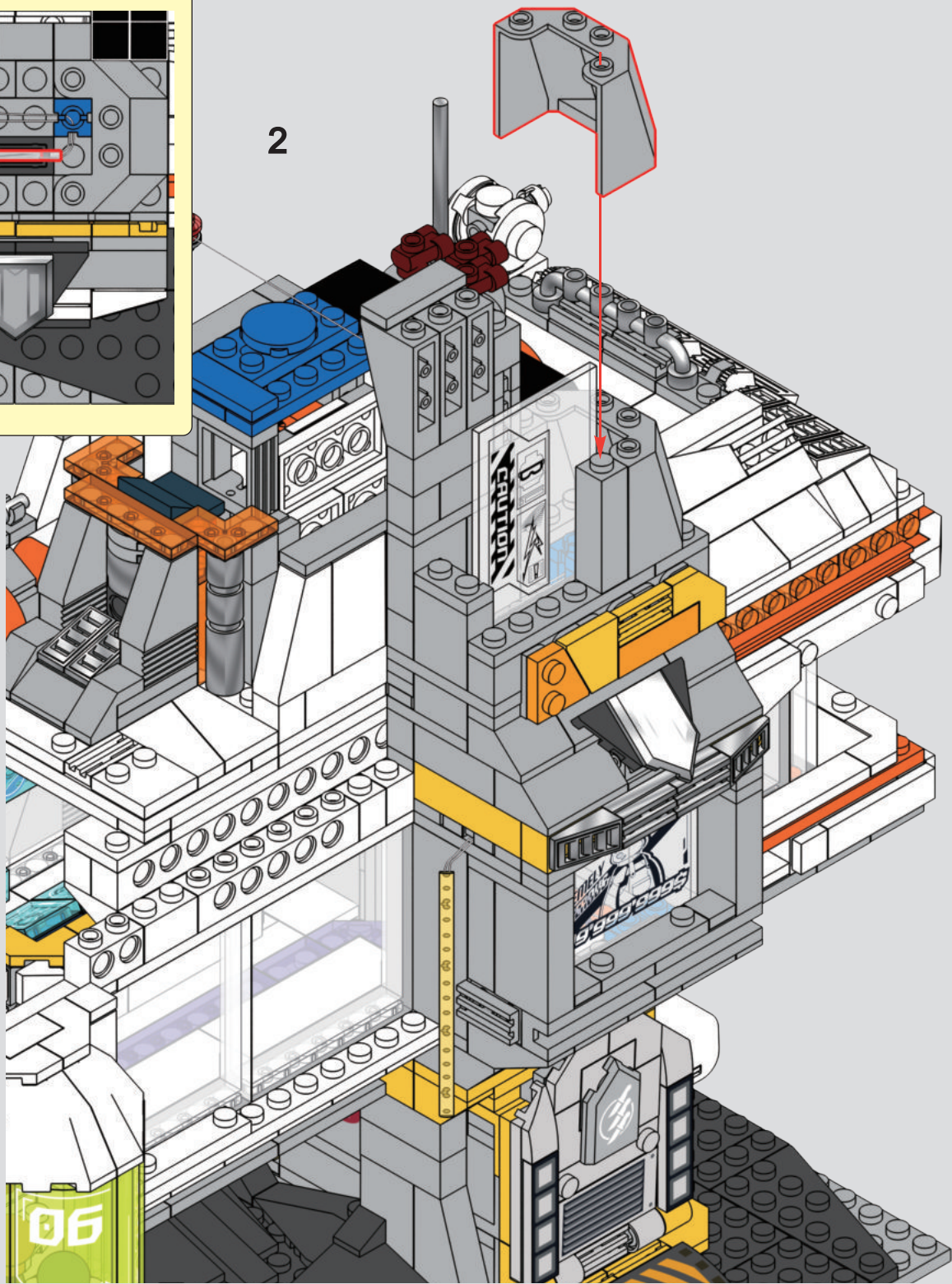

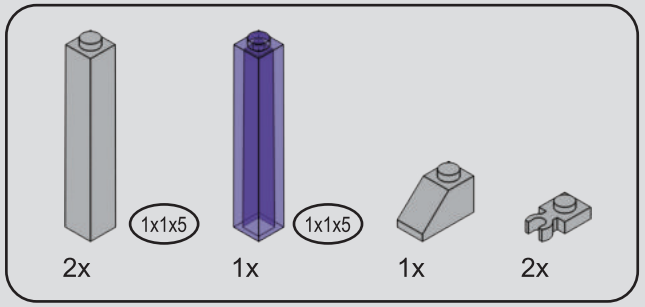

151

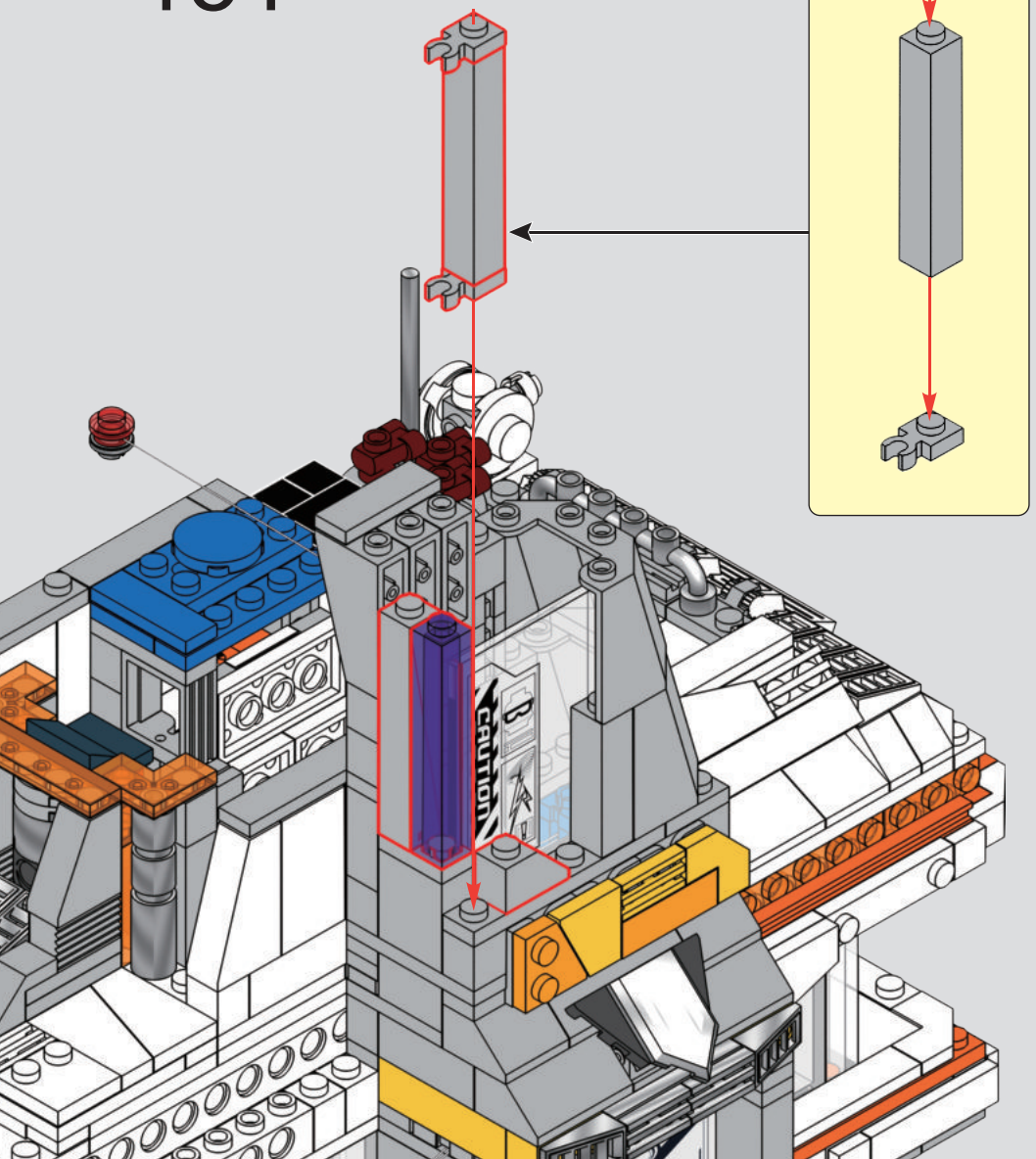

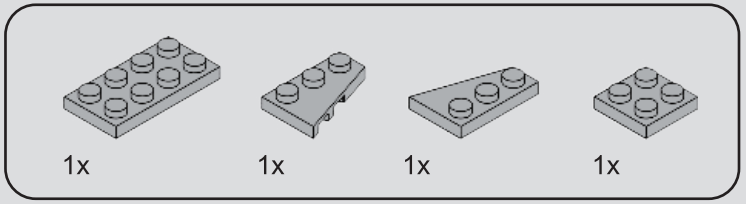

152

1

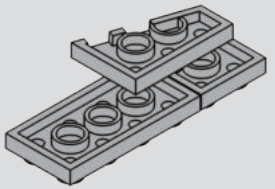

2

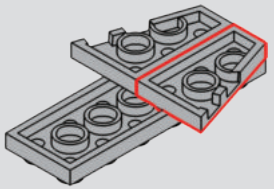

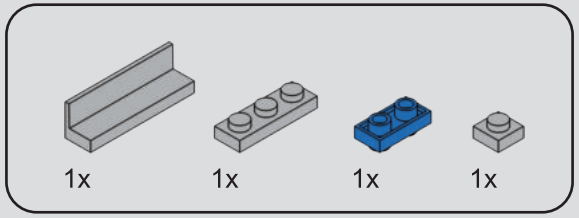

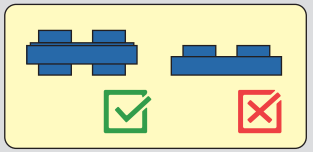

153

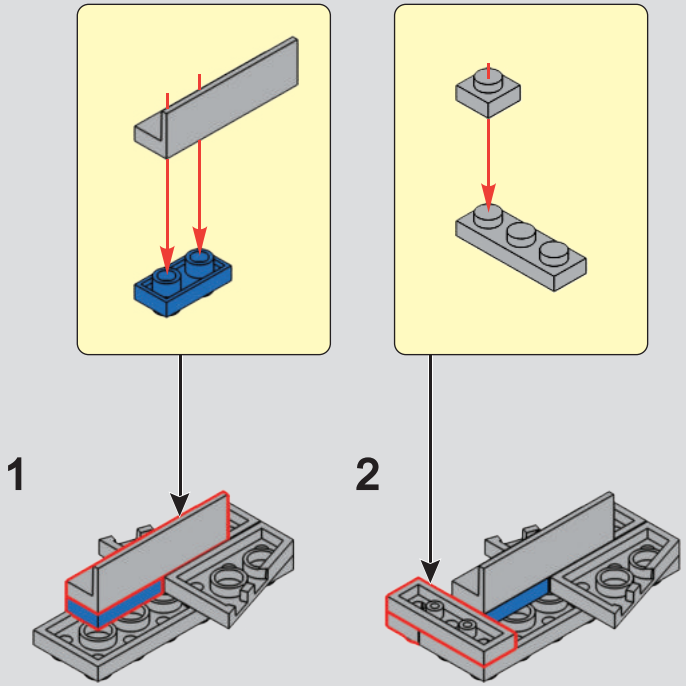

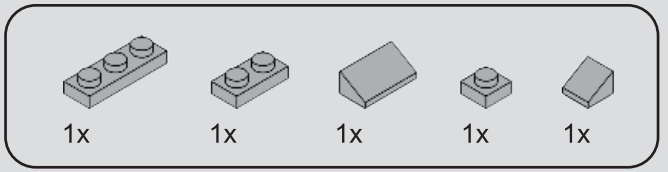

154

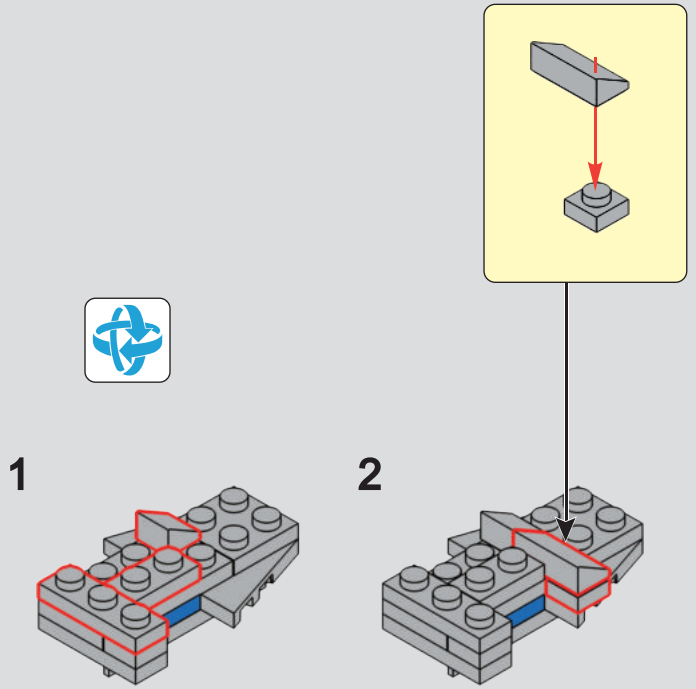

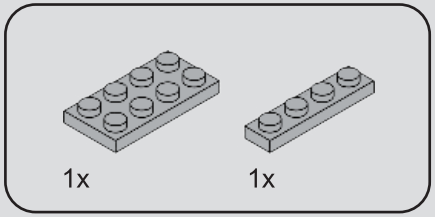

155

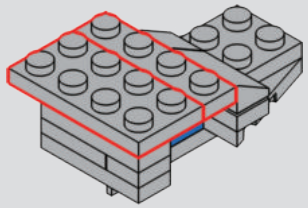

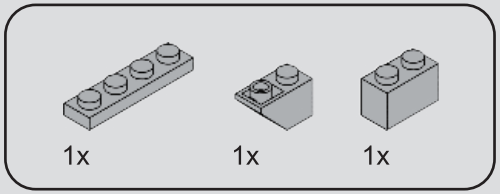

156

1

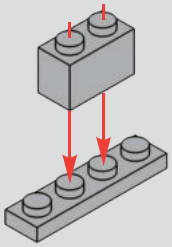

2

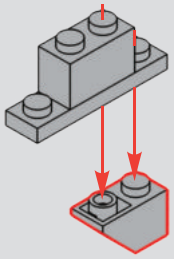

157

1

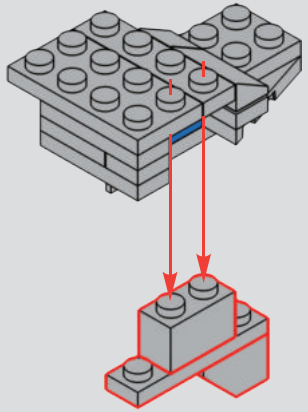

2

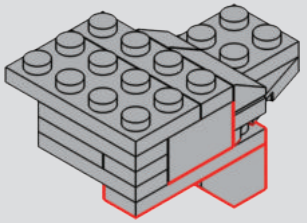

158

1

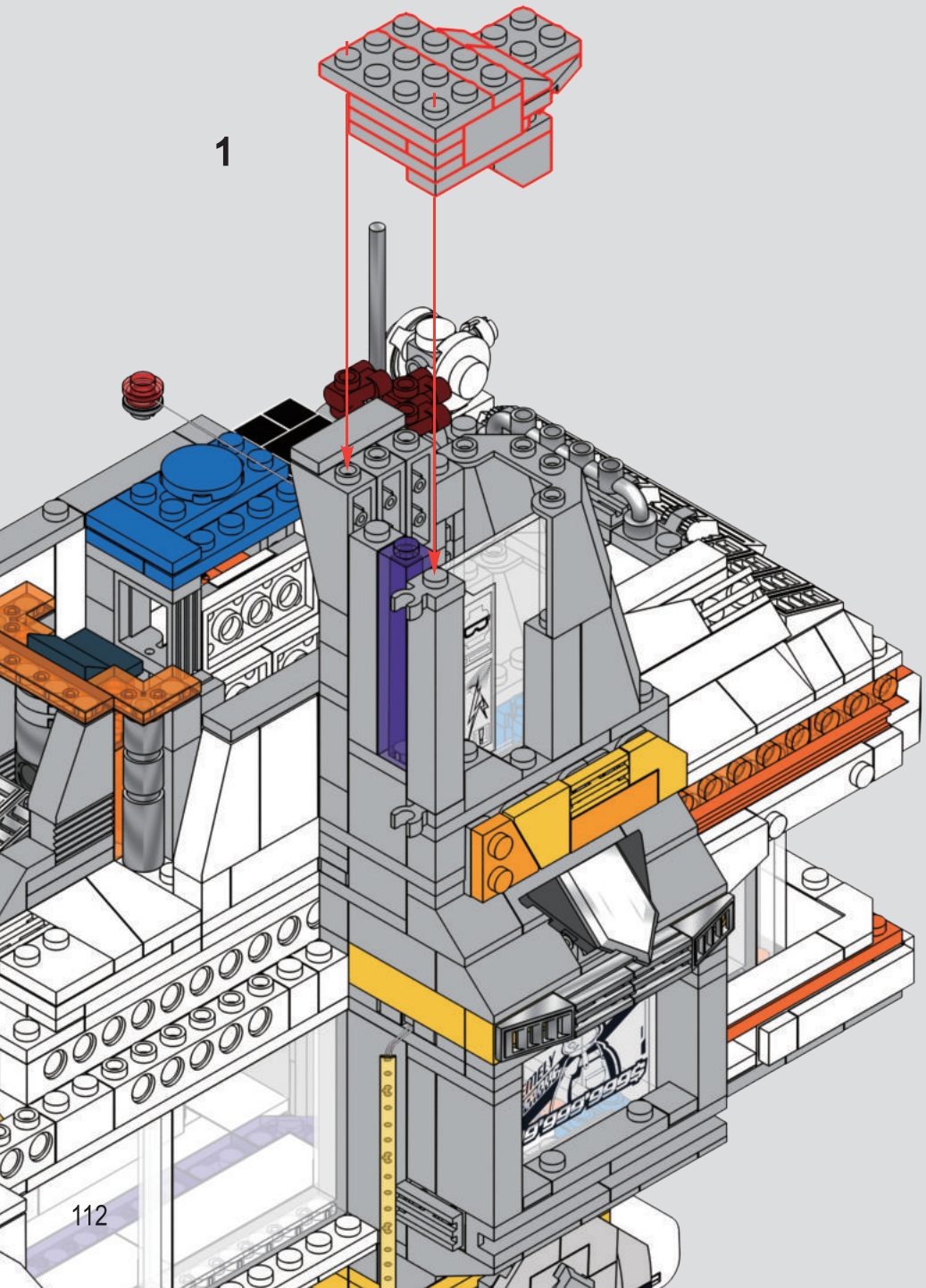

2

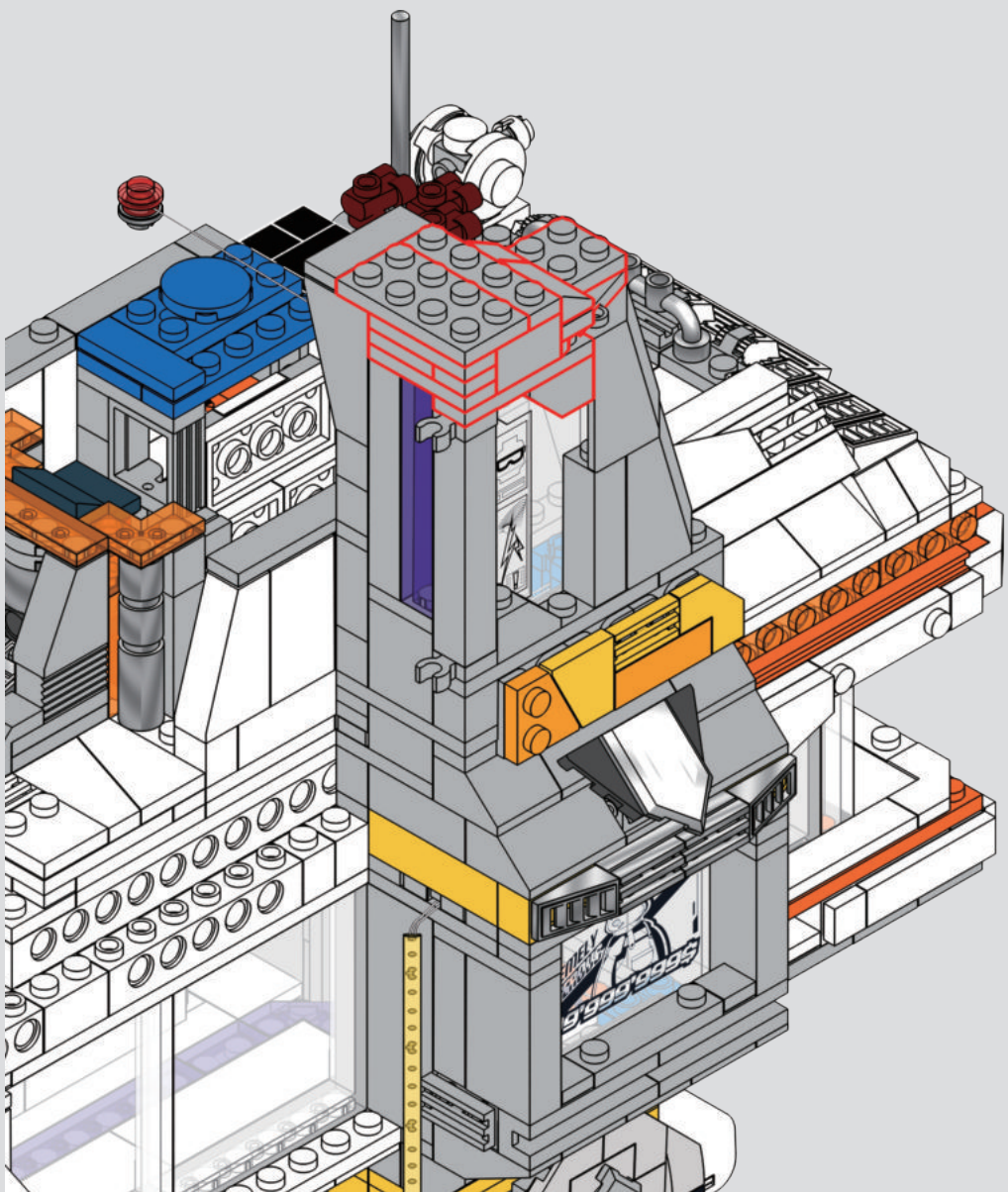

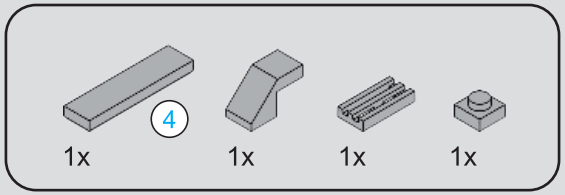



159

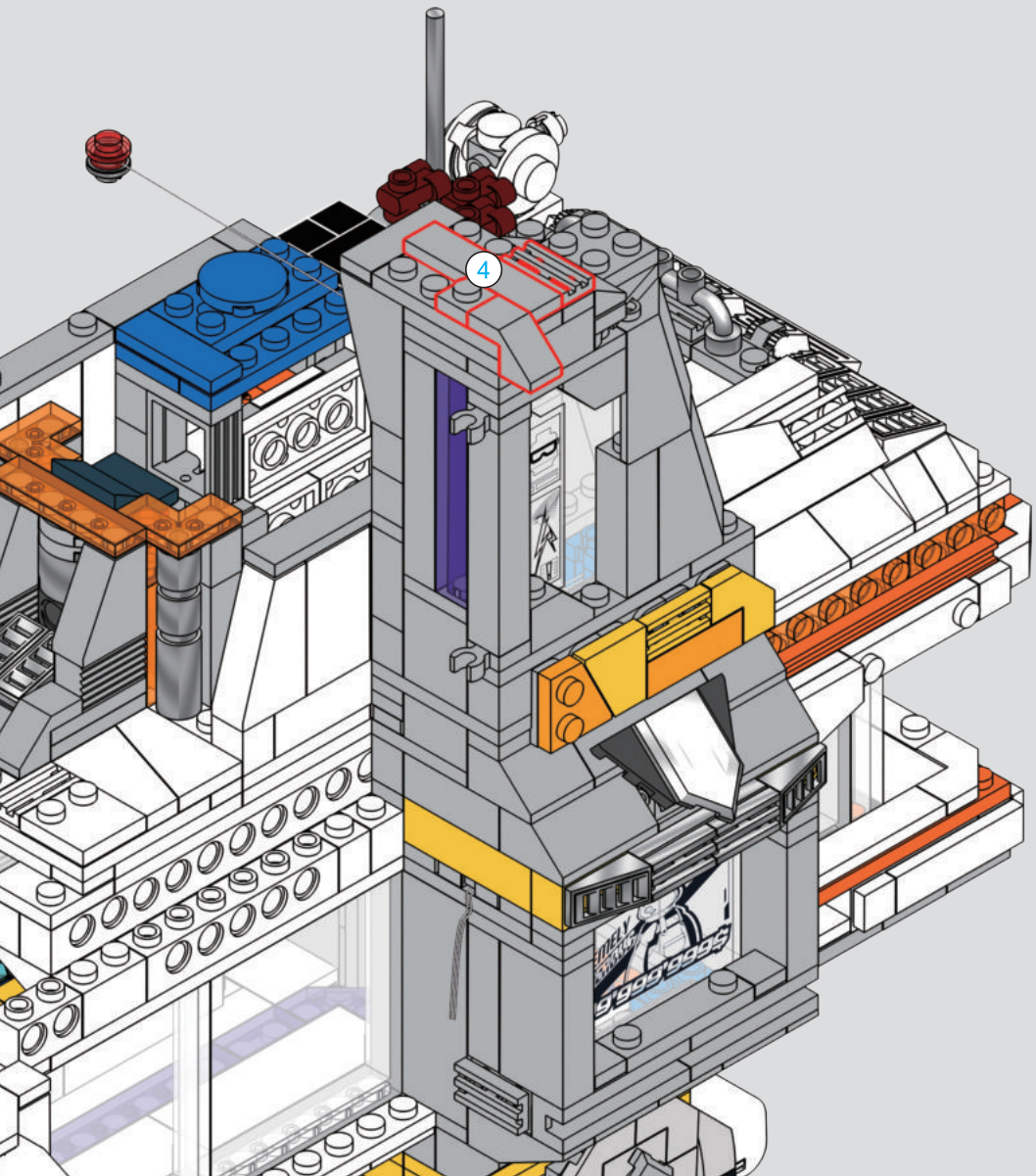

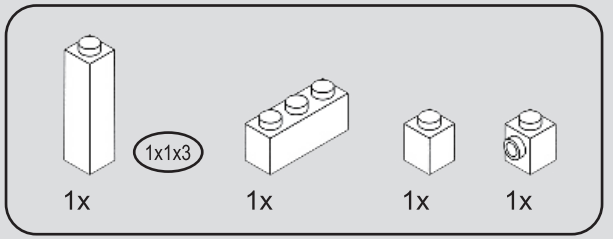

160

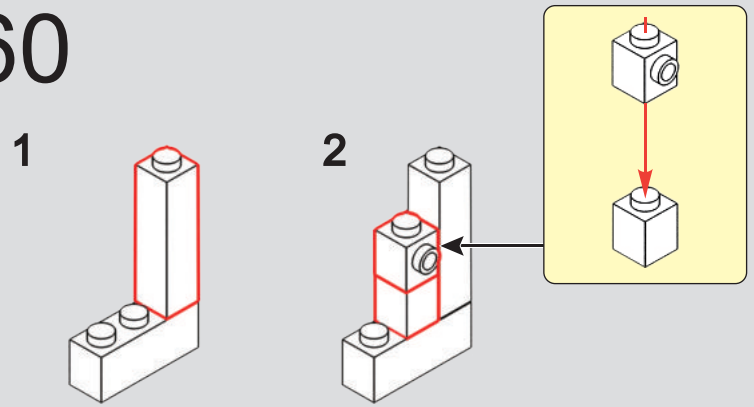

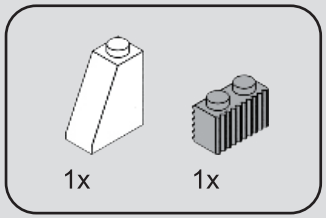

161

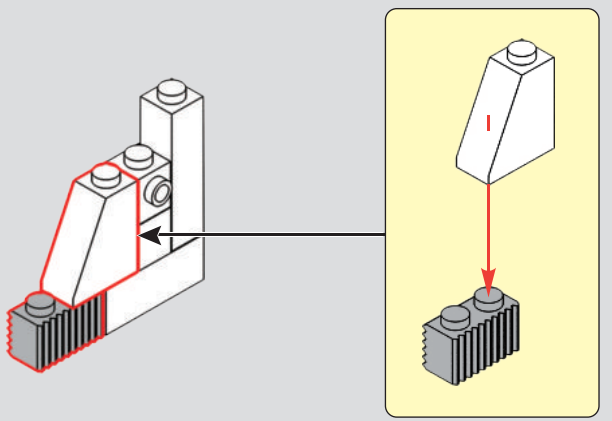

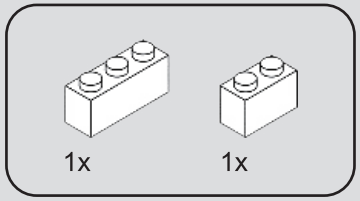

162

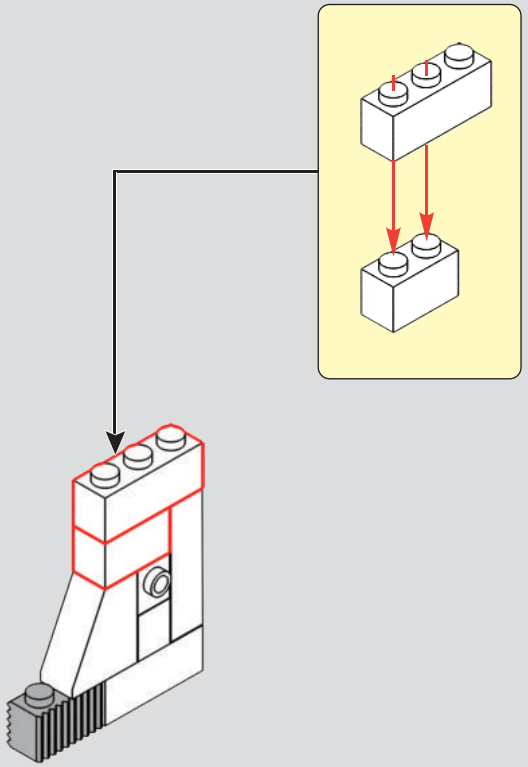

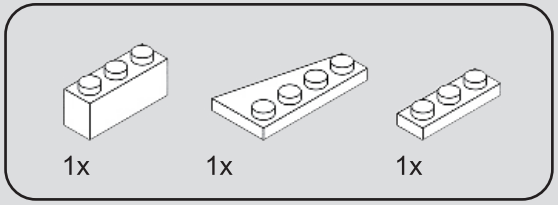

163

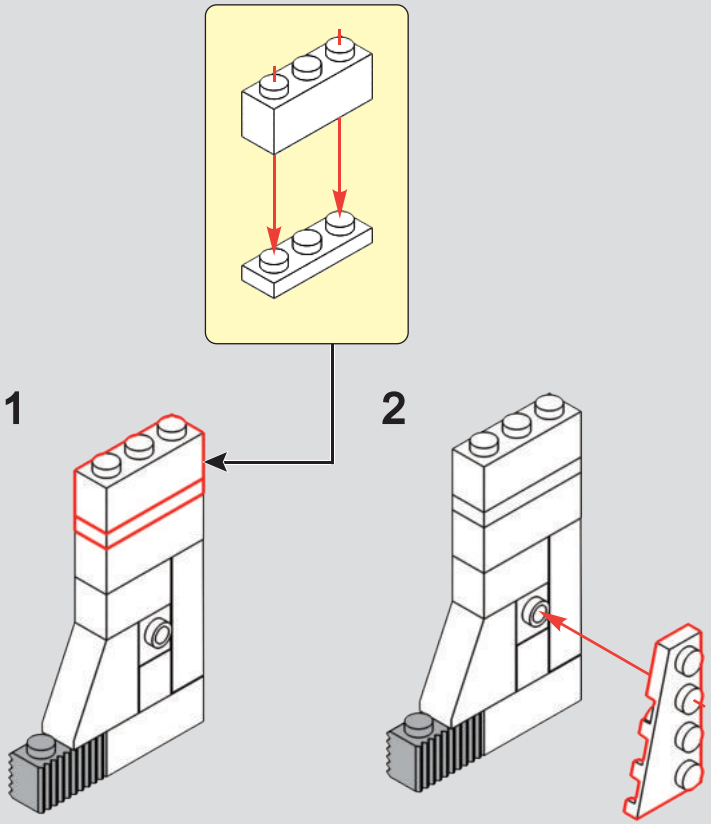

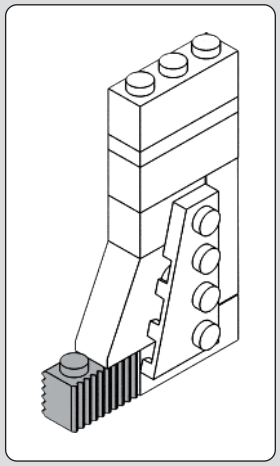

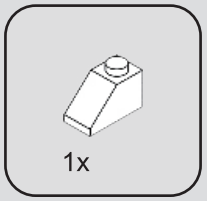

164

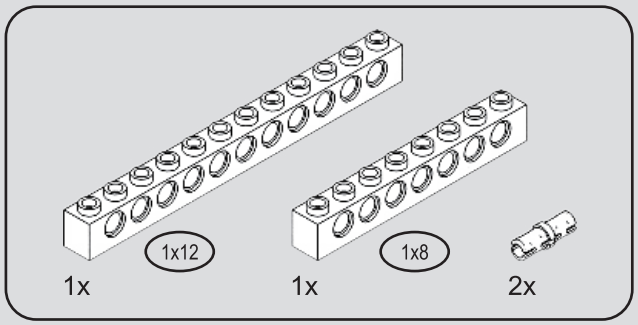

165

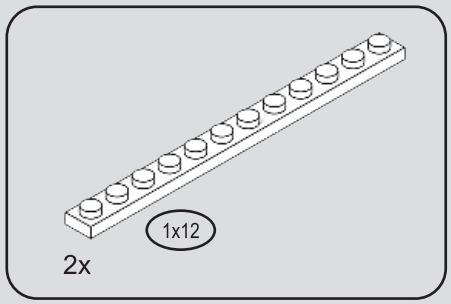

166

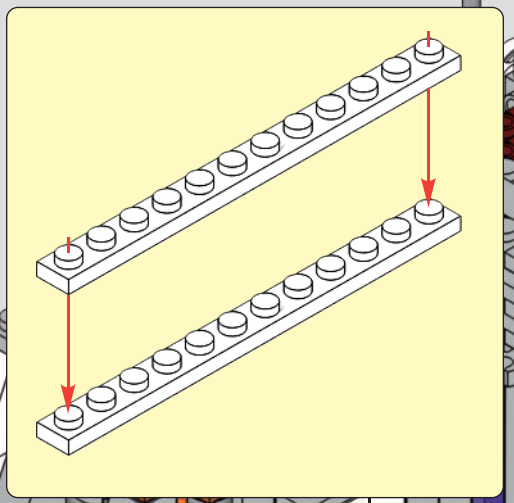

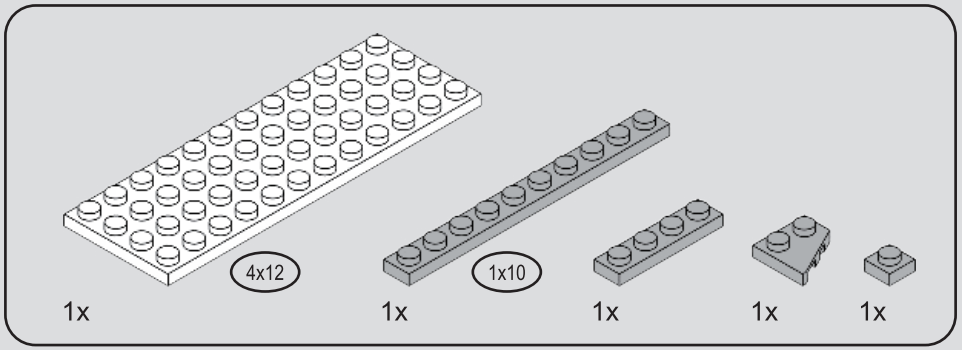

167

1

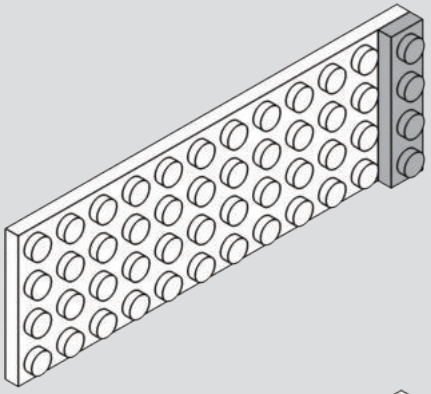

2

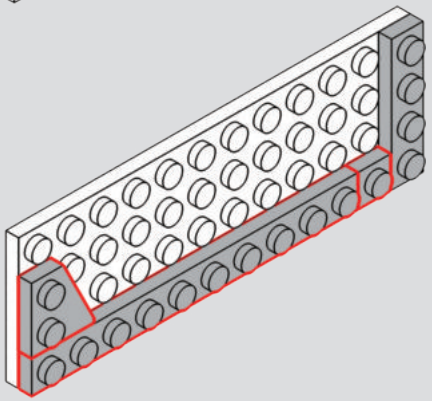

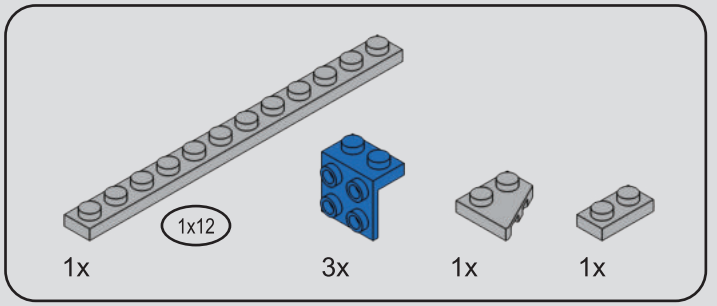

168

1

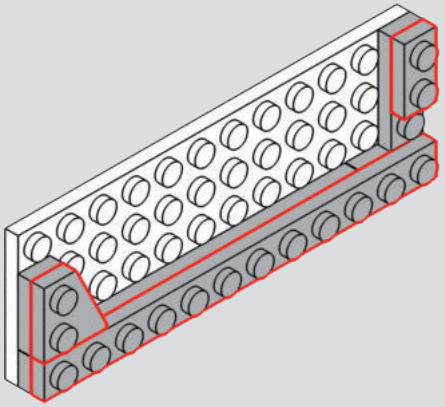

2

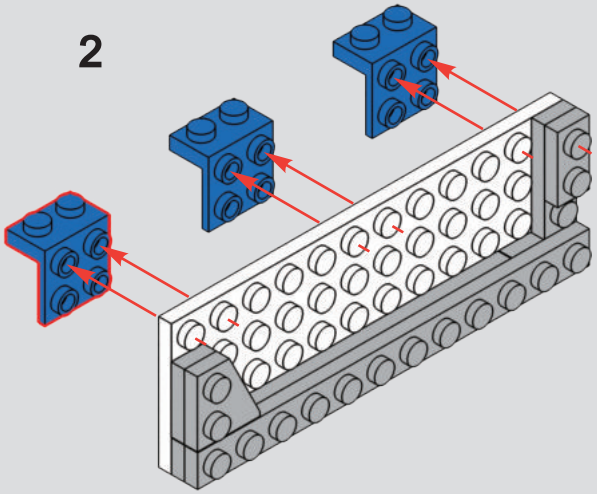

1

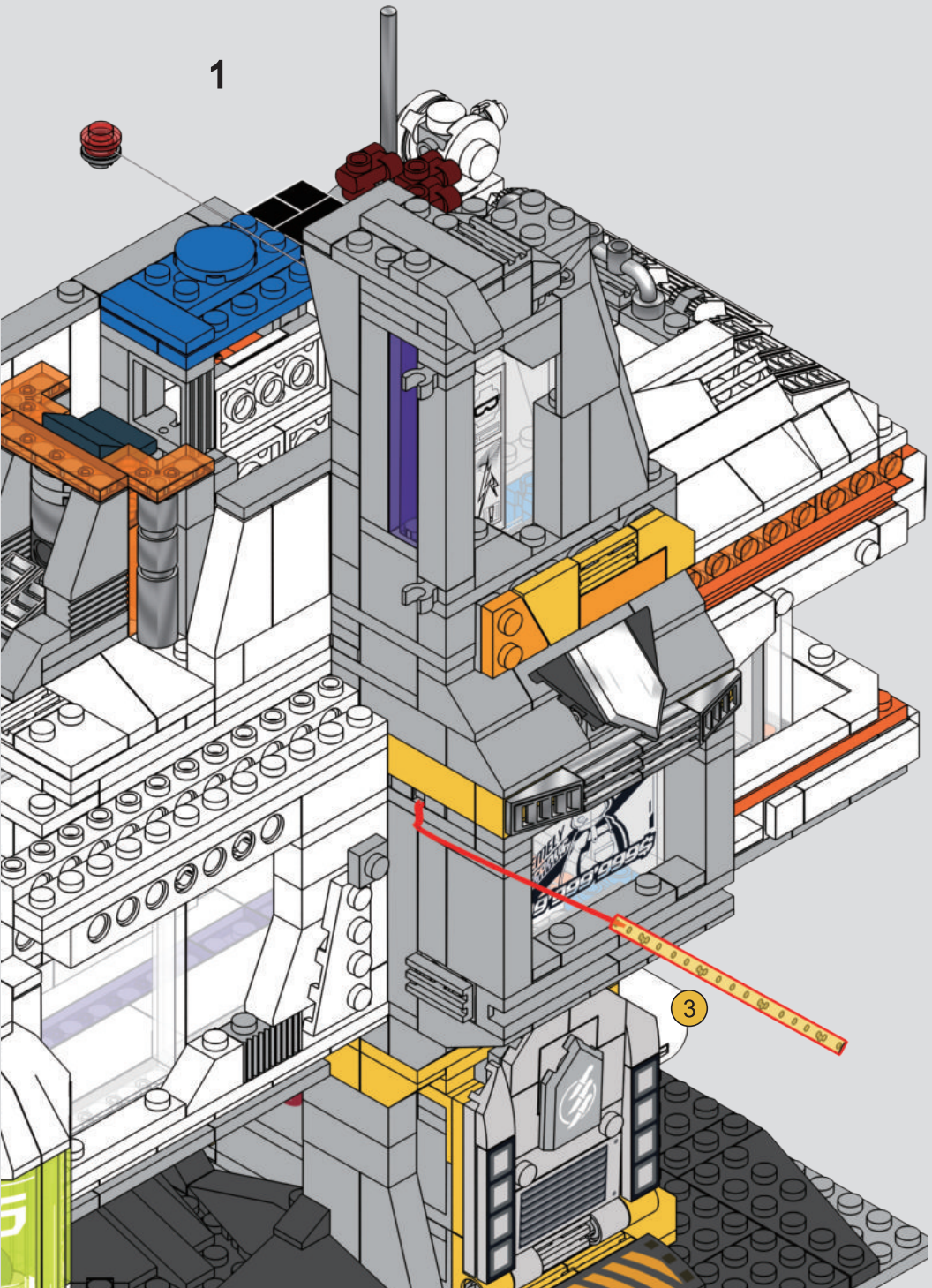

2

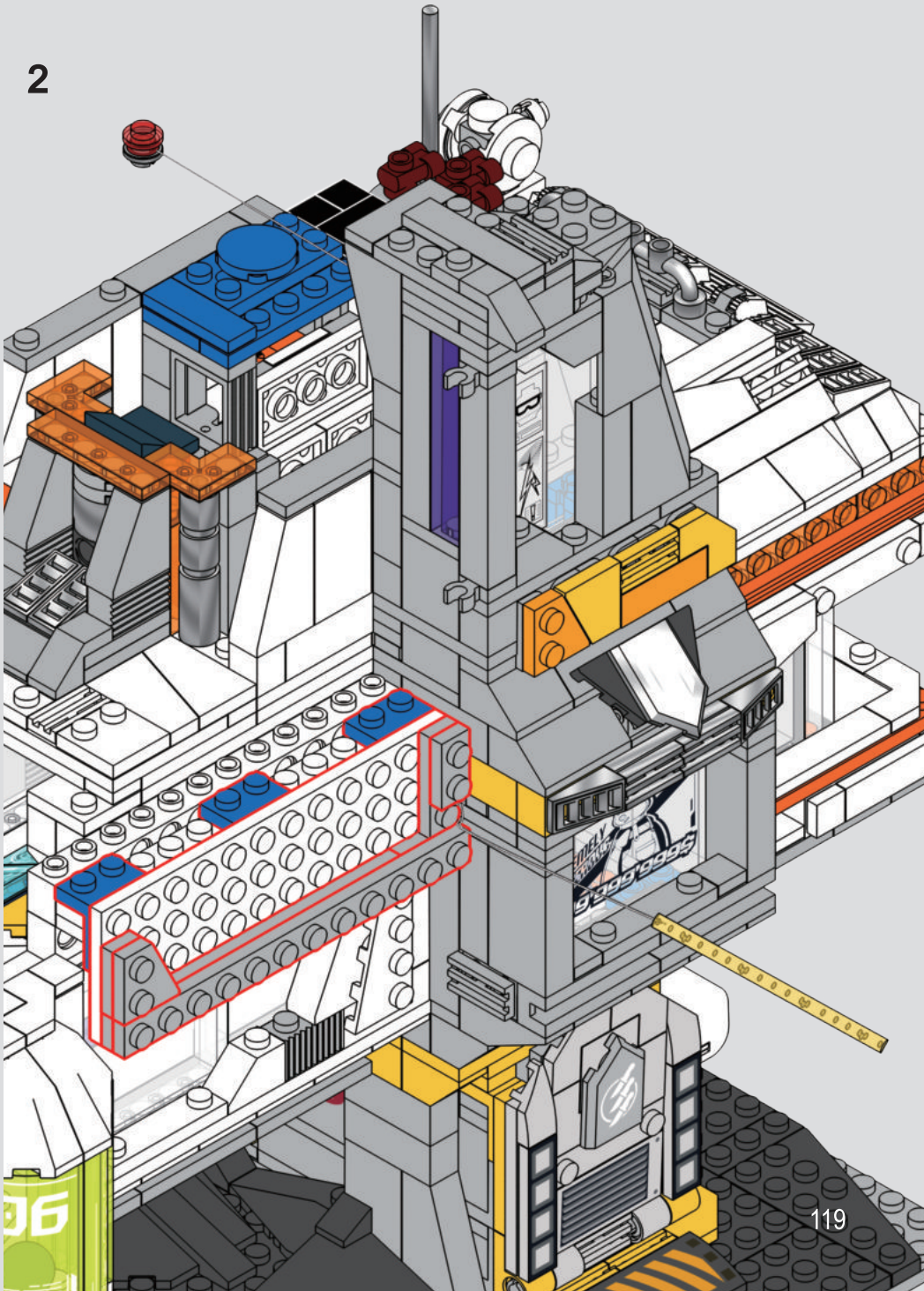

3

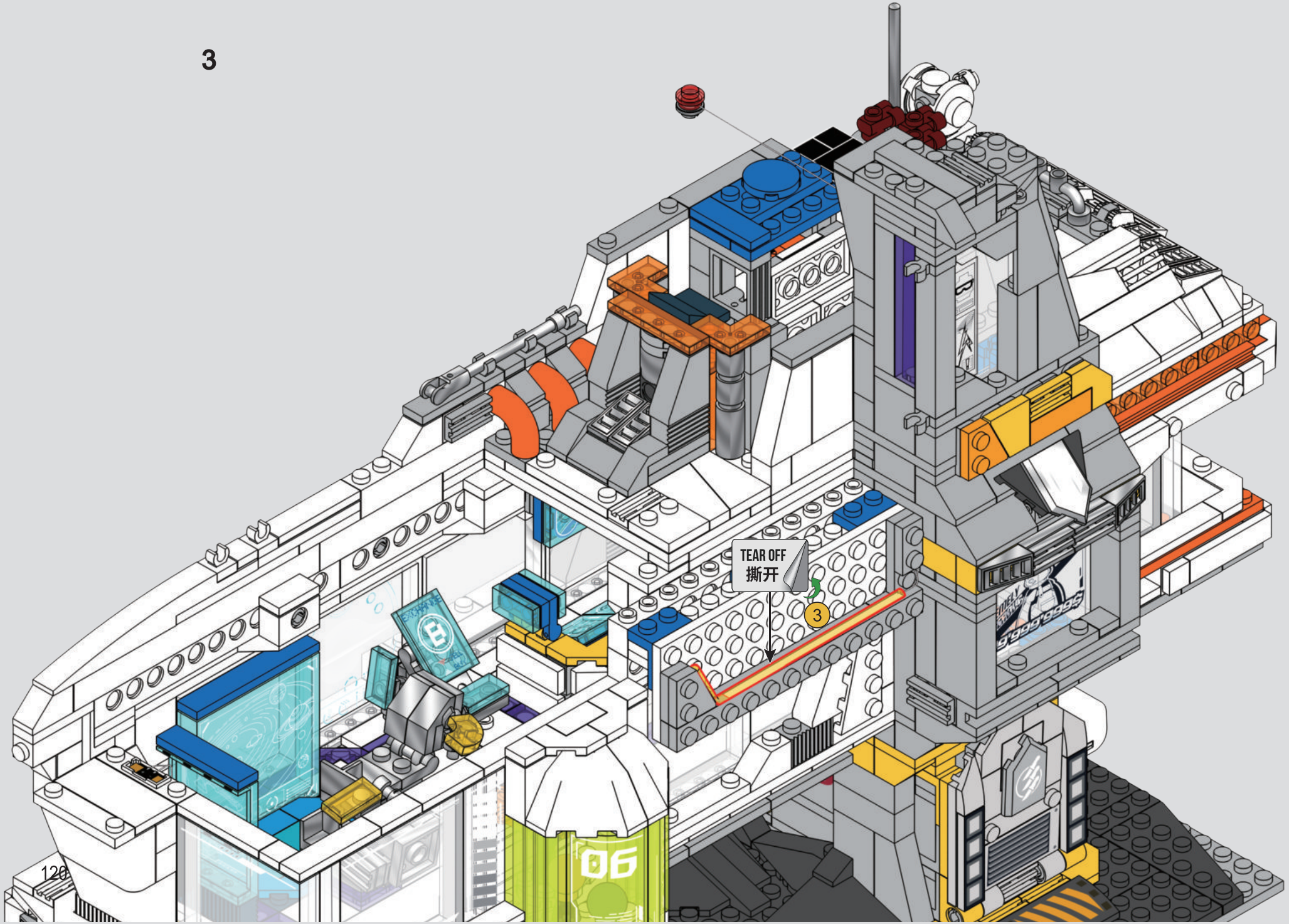

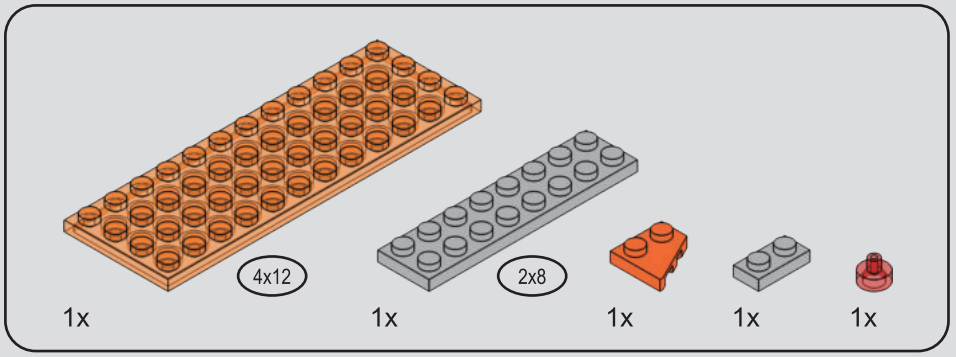

170

1

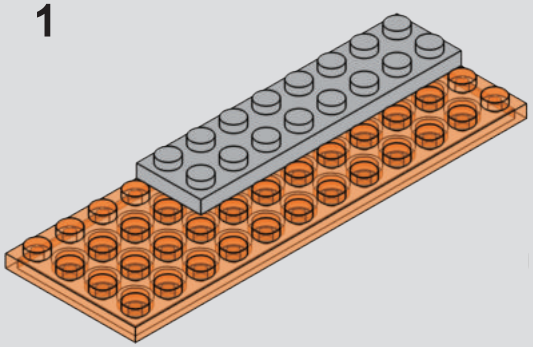

2

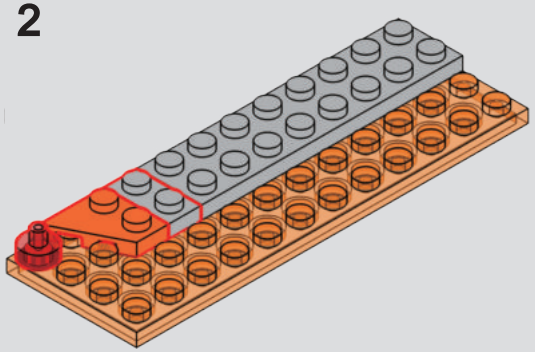

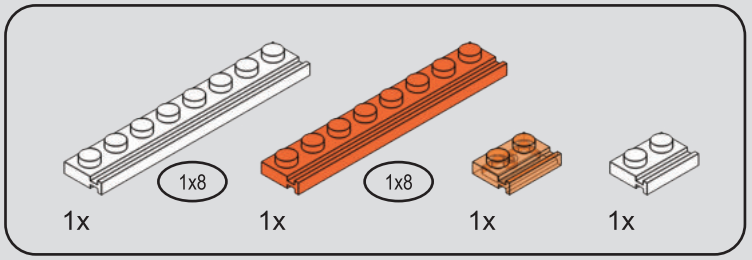

171

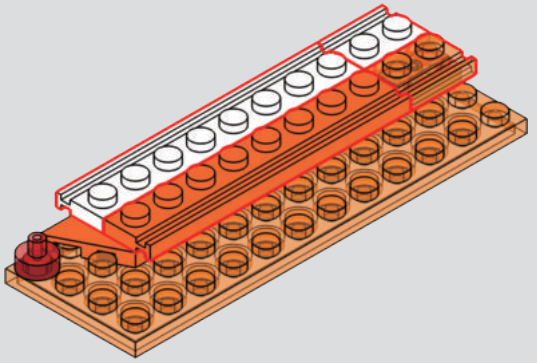

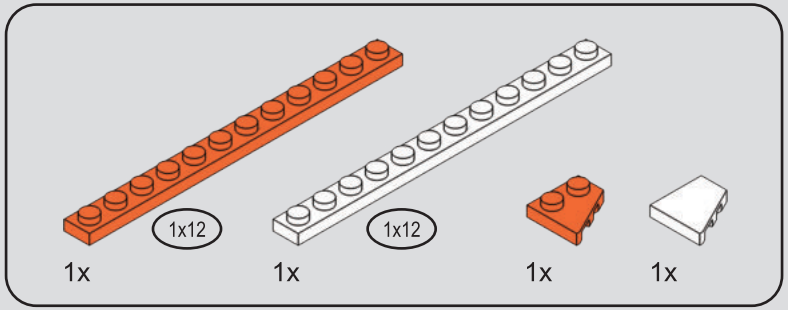

172

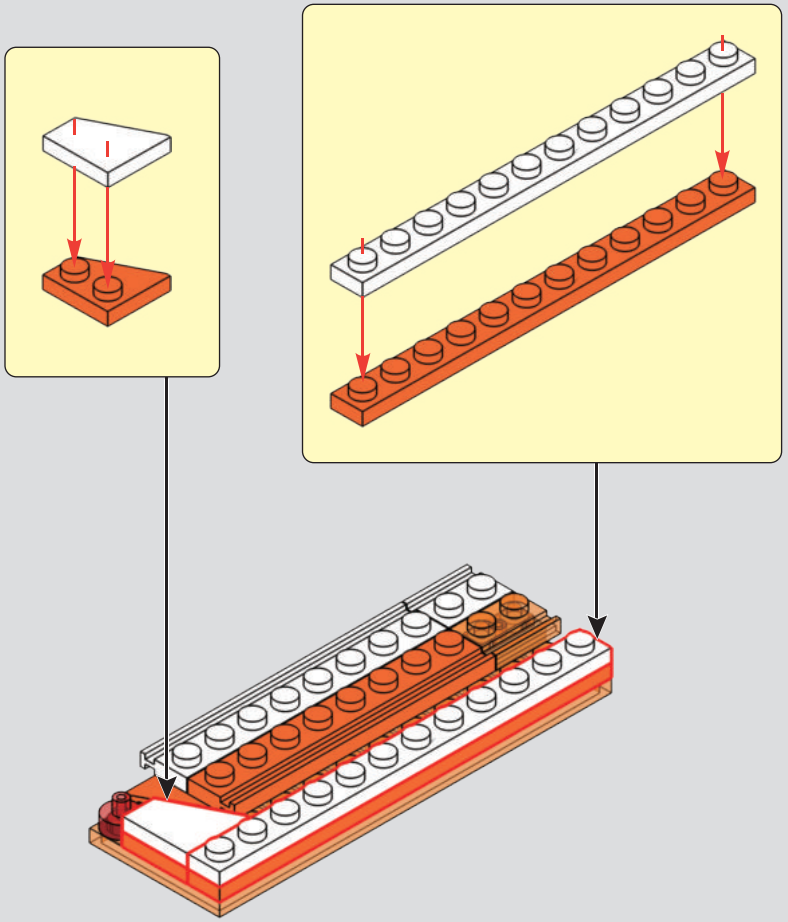

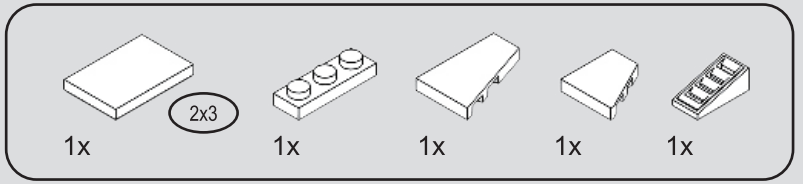

173

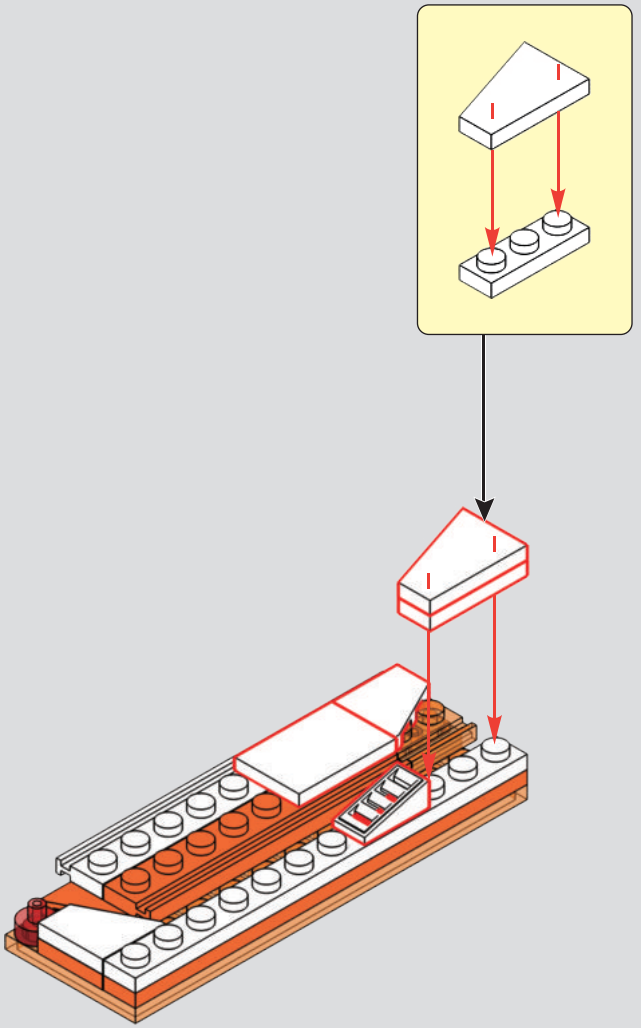

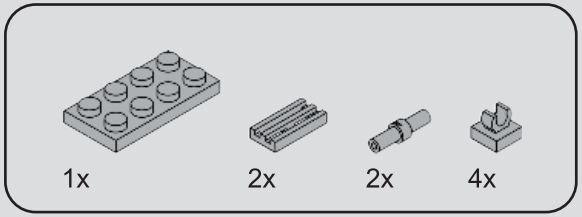

174

1

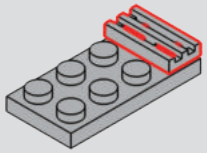

2

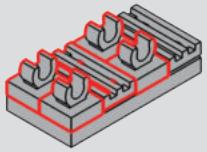

3

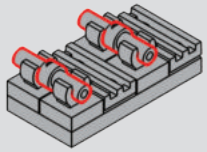

175

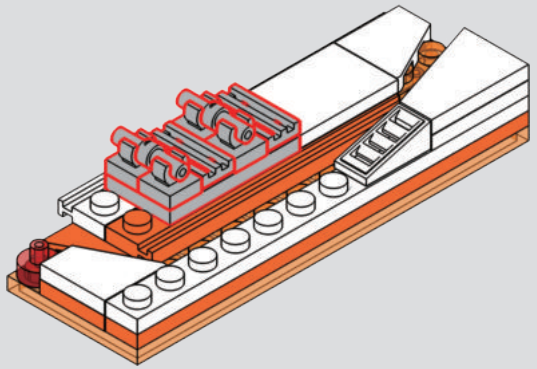

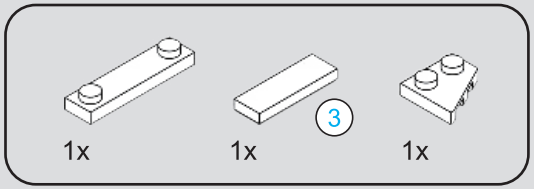

176

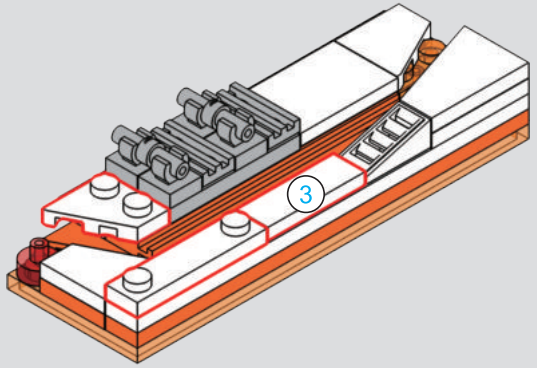

177

1

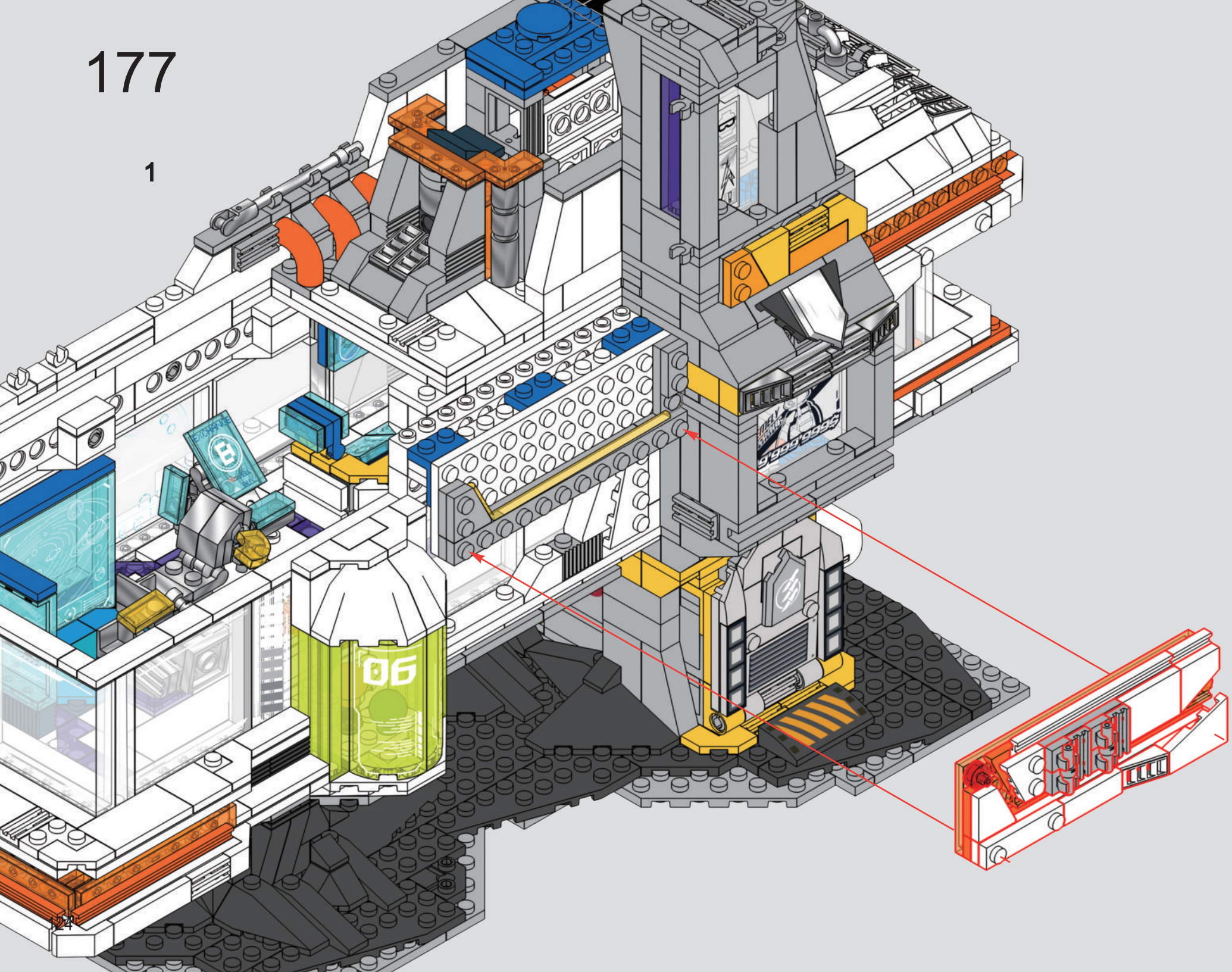

2

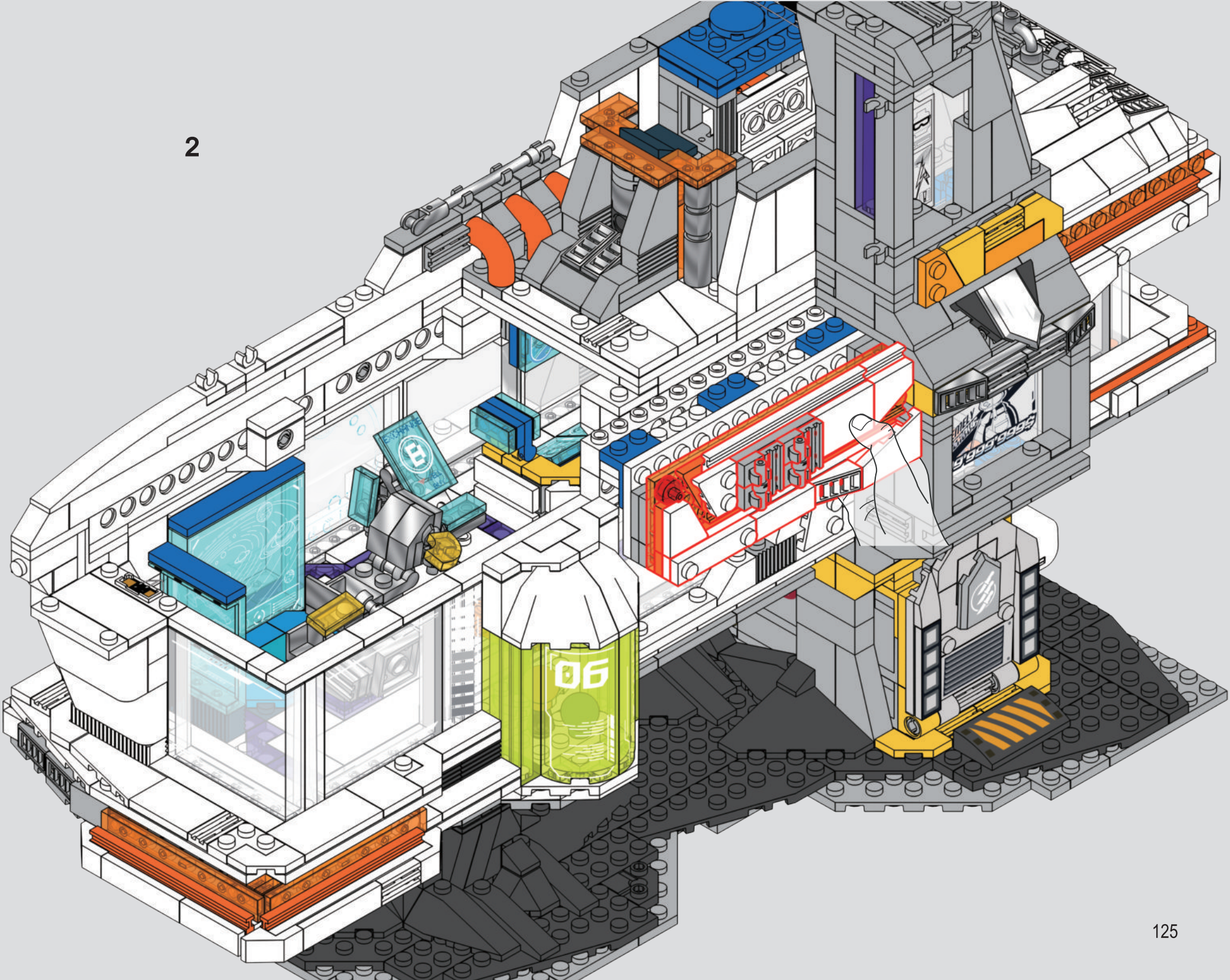

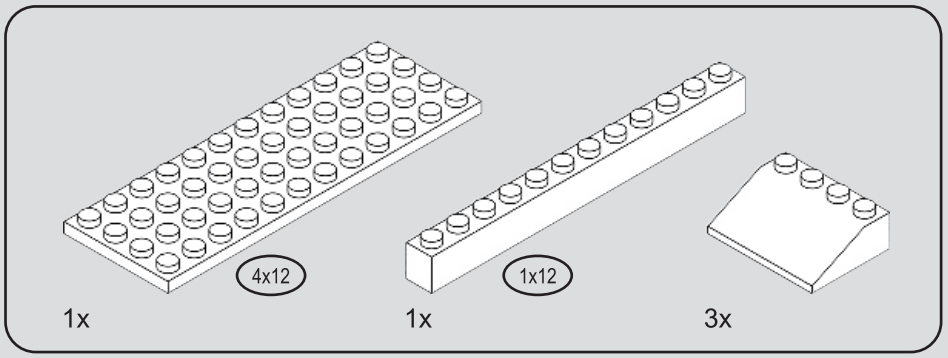

178

1

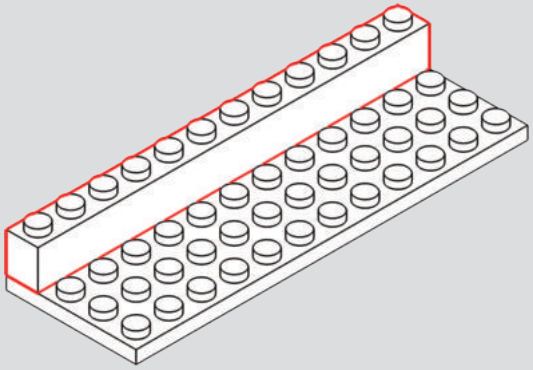

2

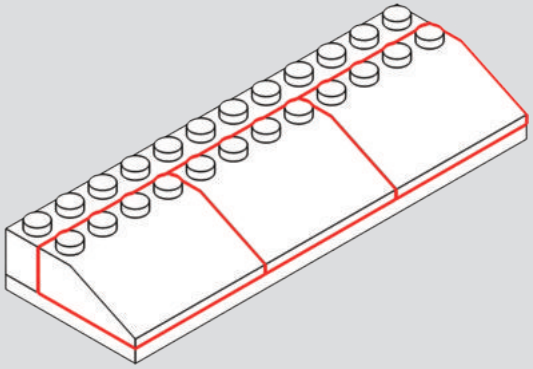

179

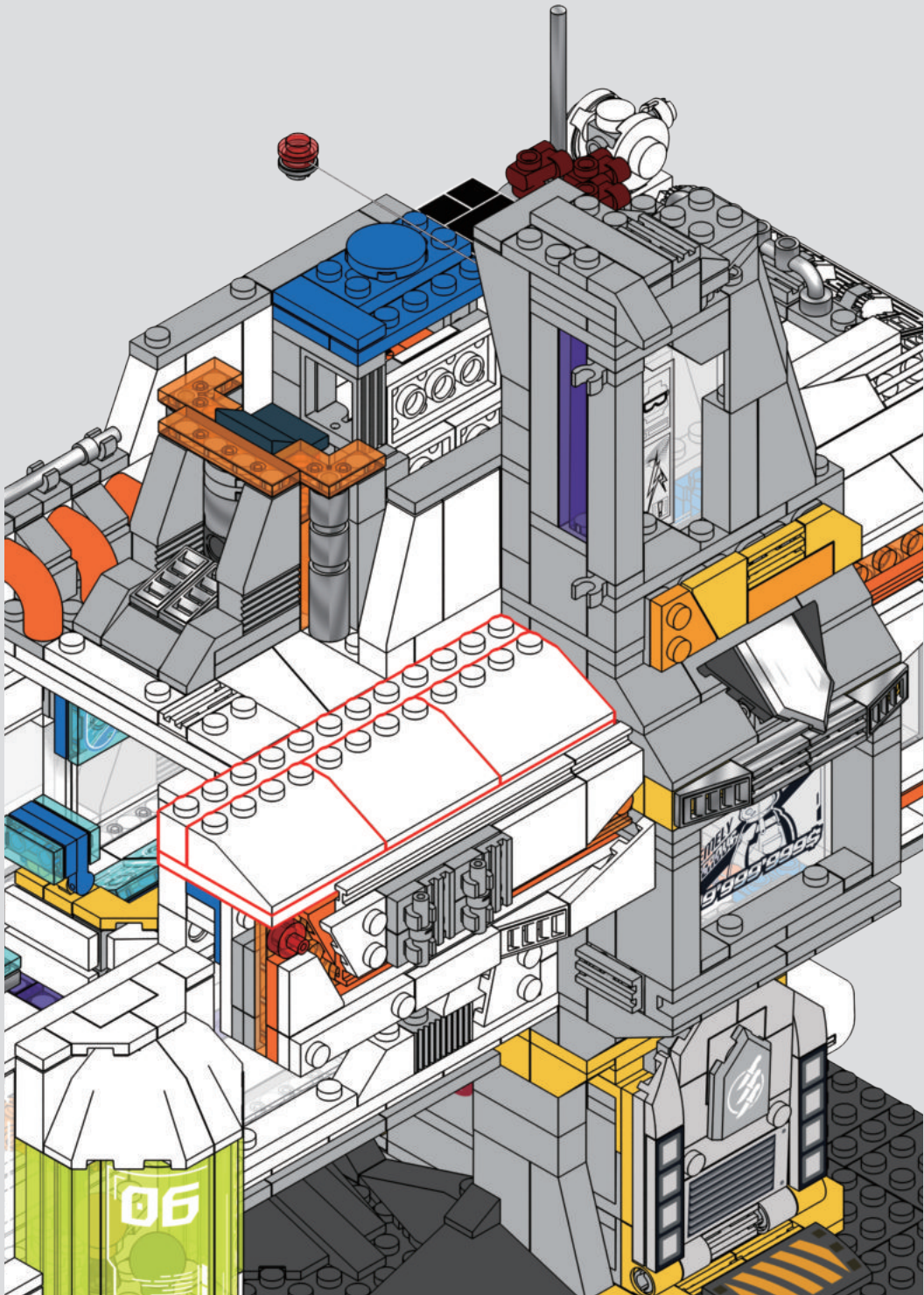

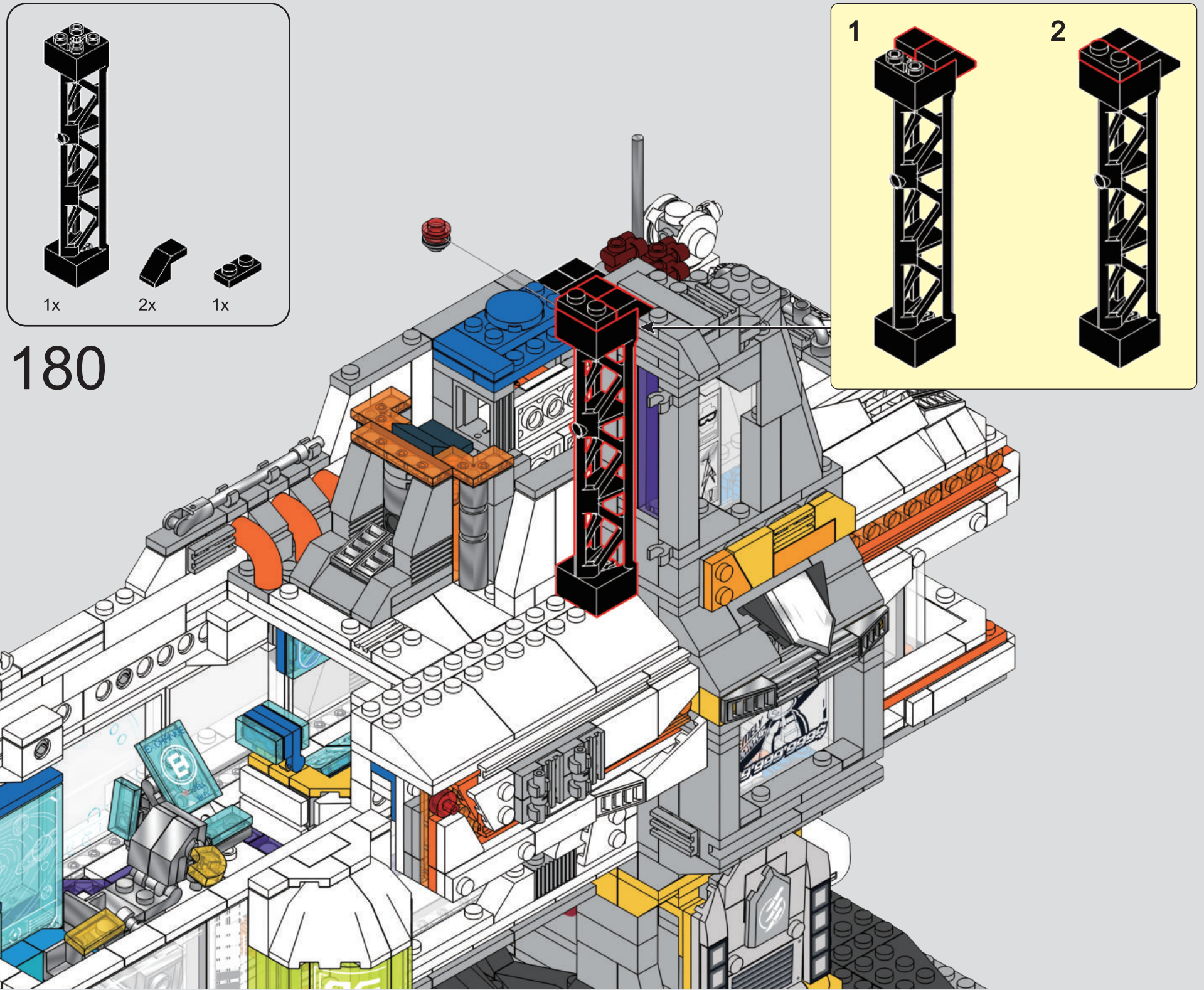
1x
2x
1x
180
1
2

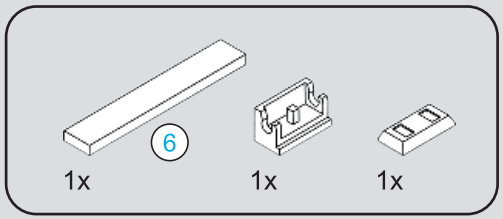

181

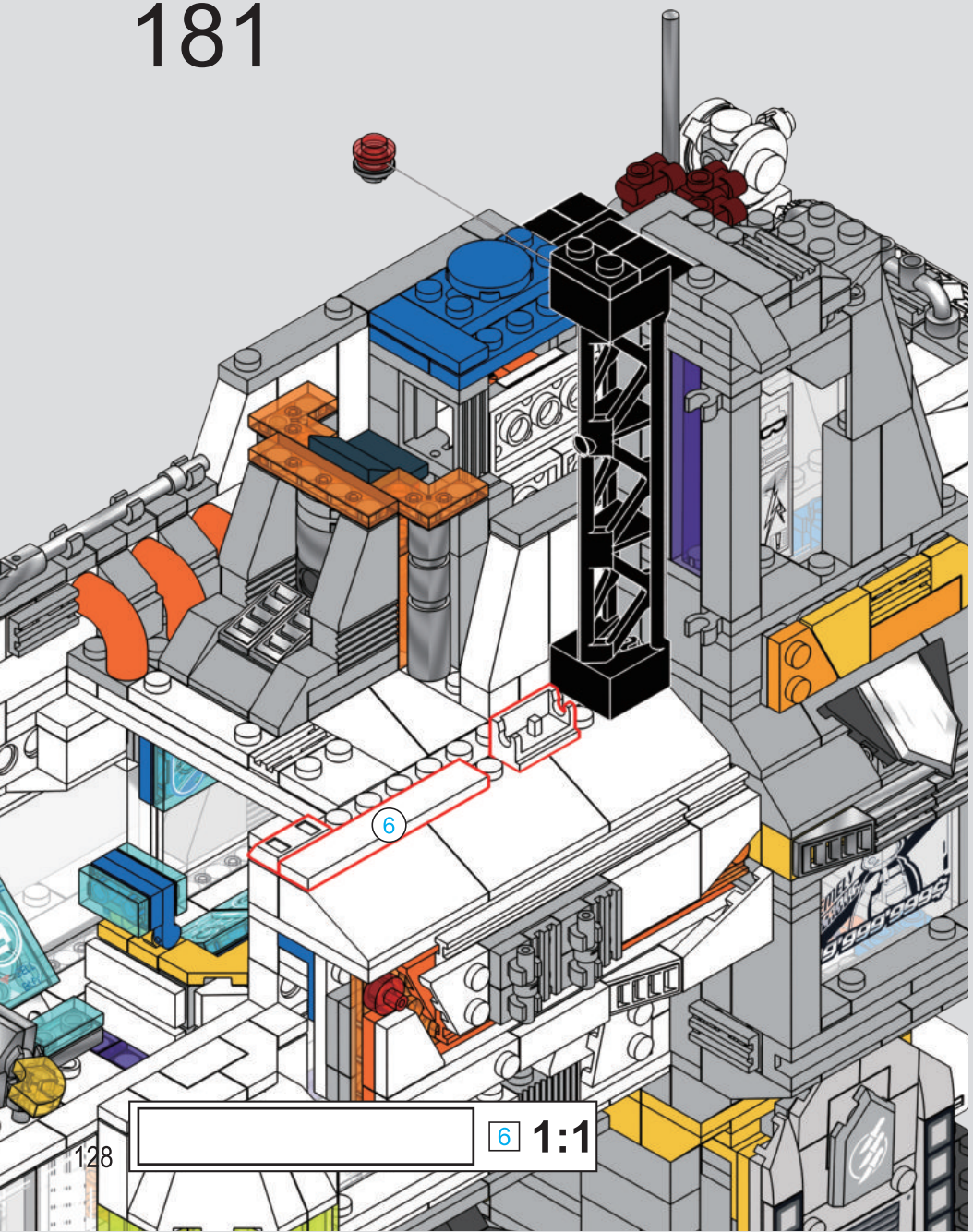

6 1:1

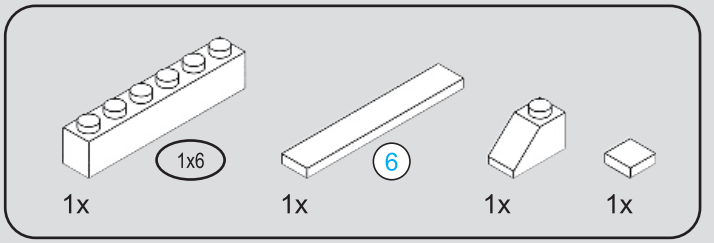

182

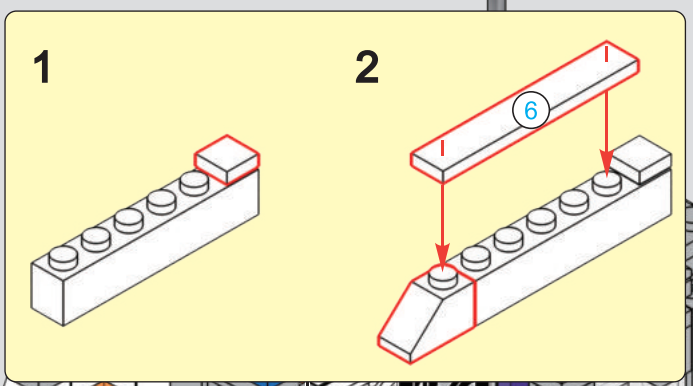

6 1:1

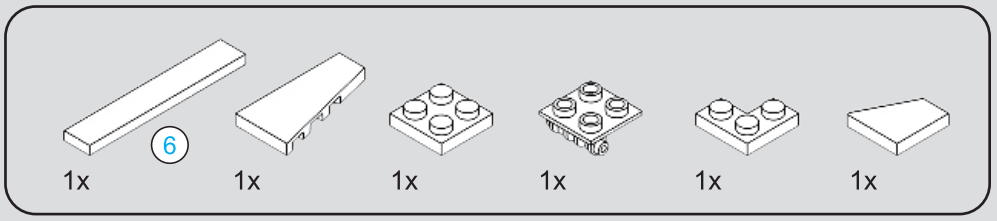

183

1

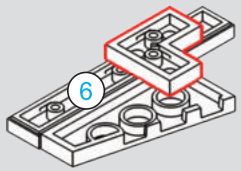

2

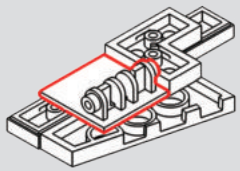

3

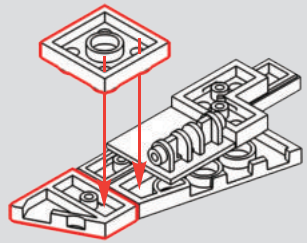

6 1:1

184

1

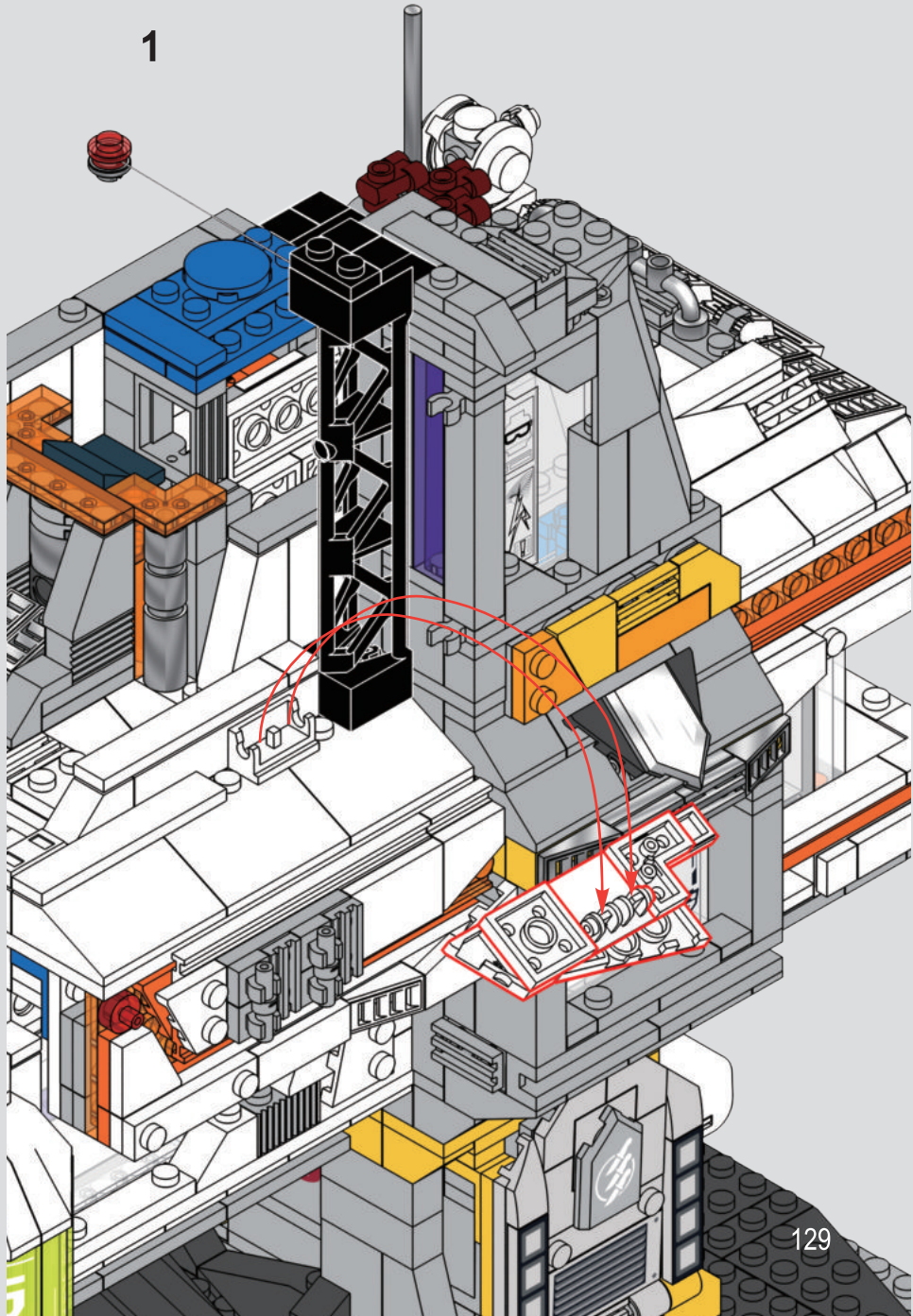

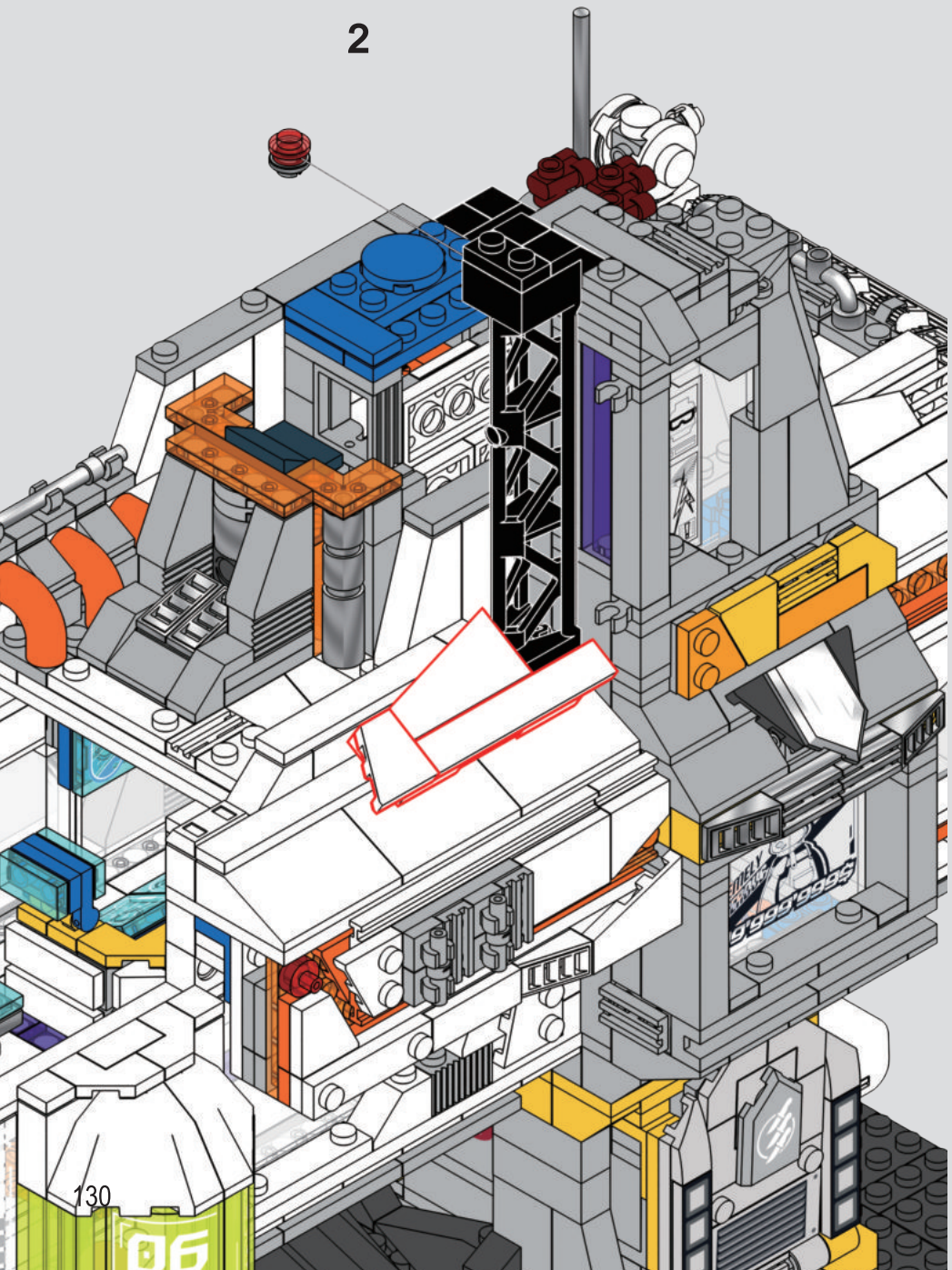

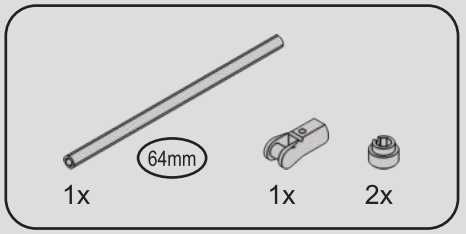

185

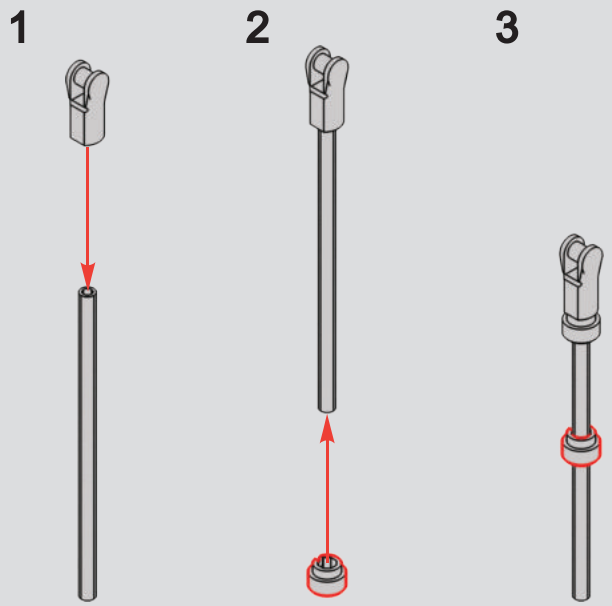

186

1

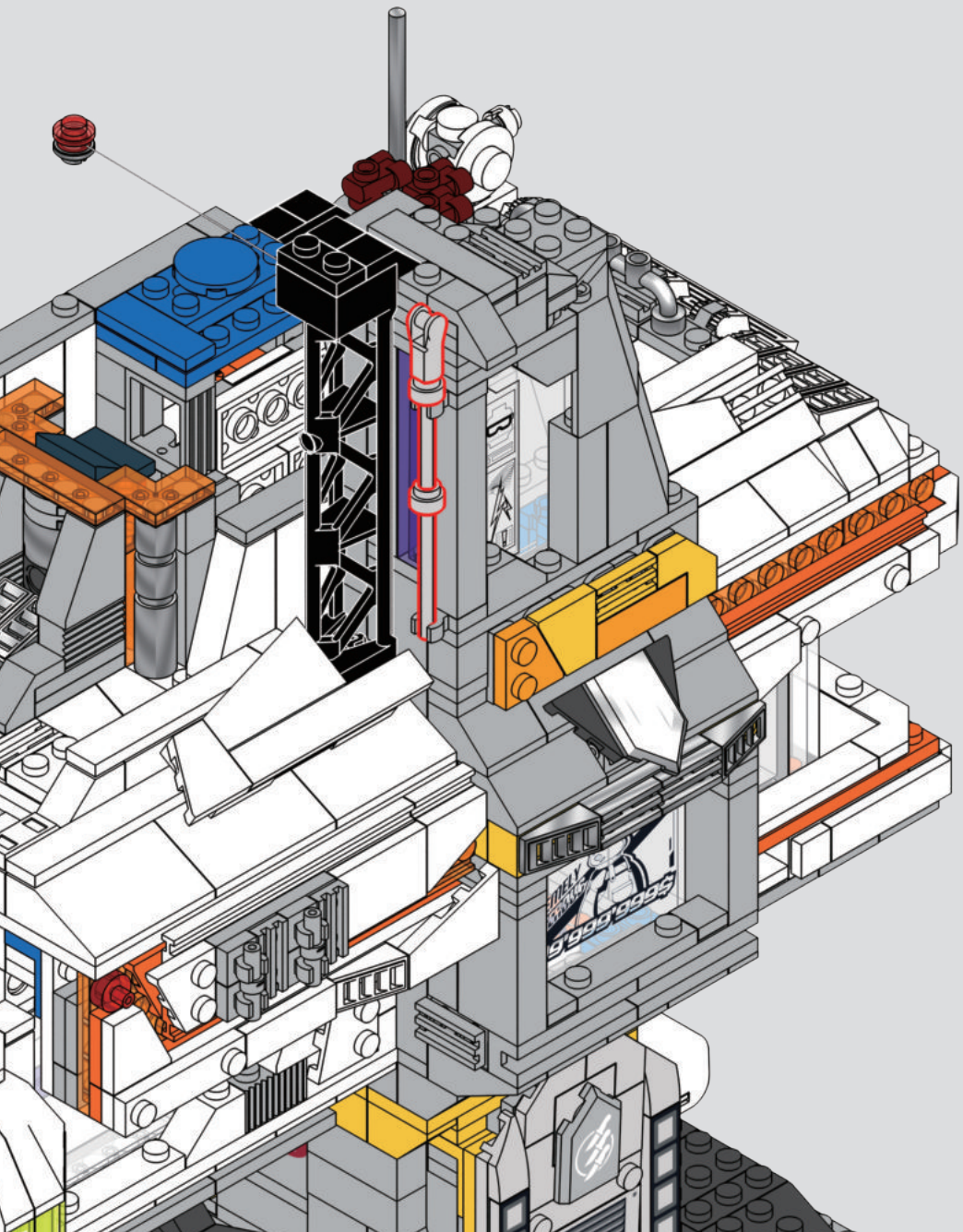

2

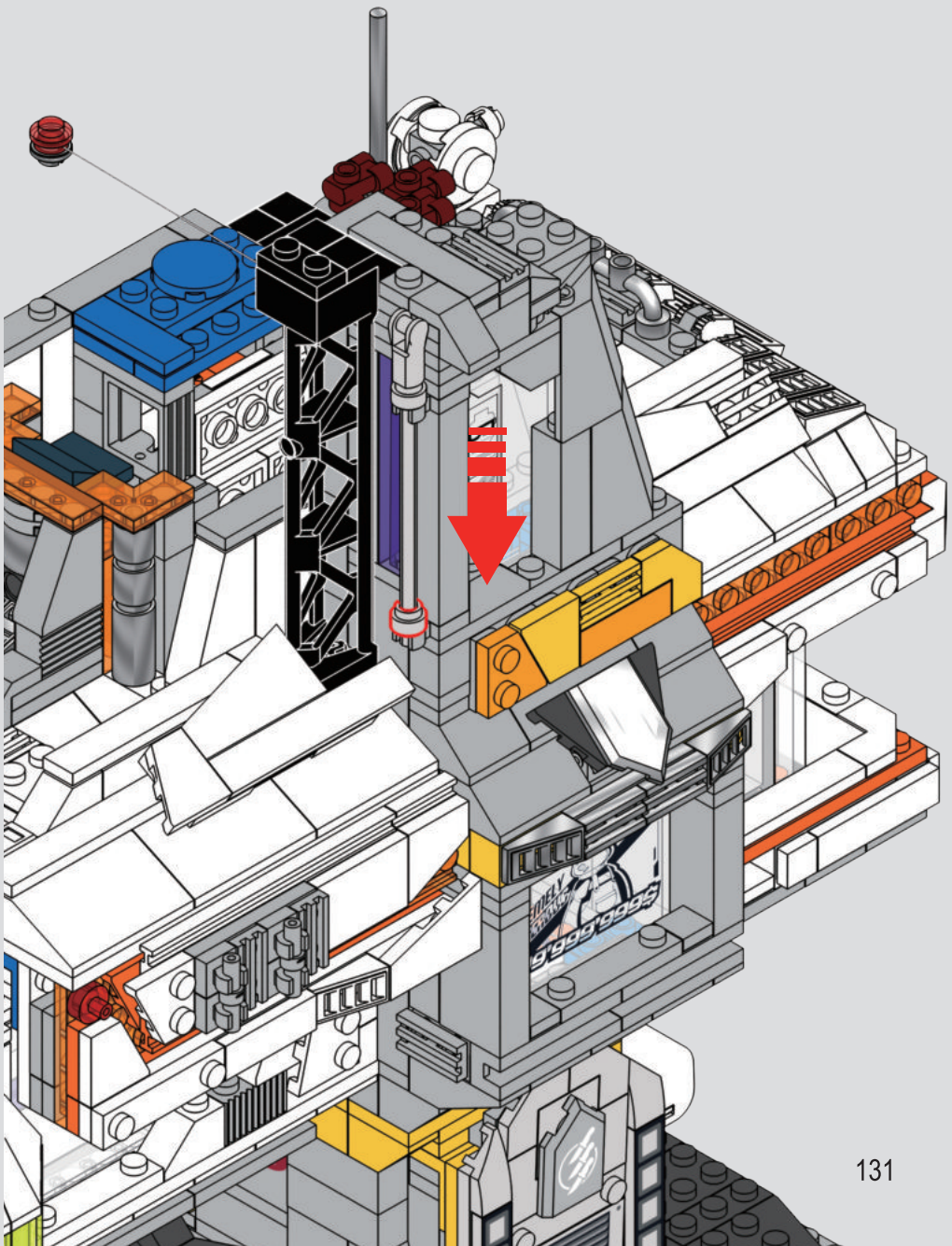

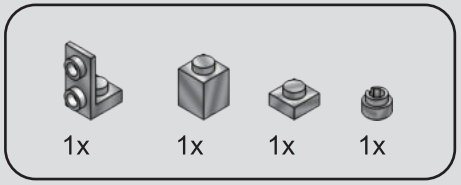

187

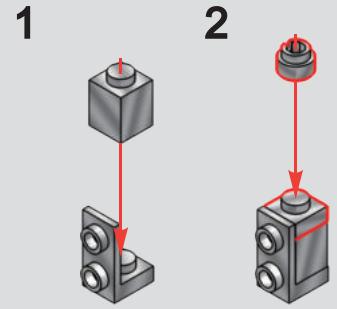

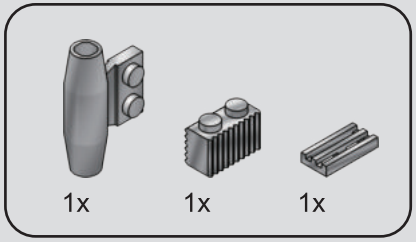

188

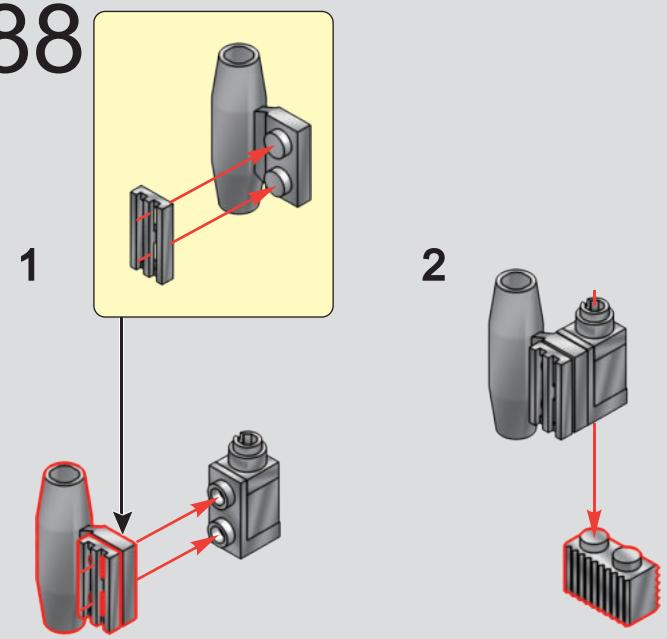

189

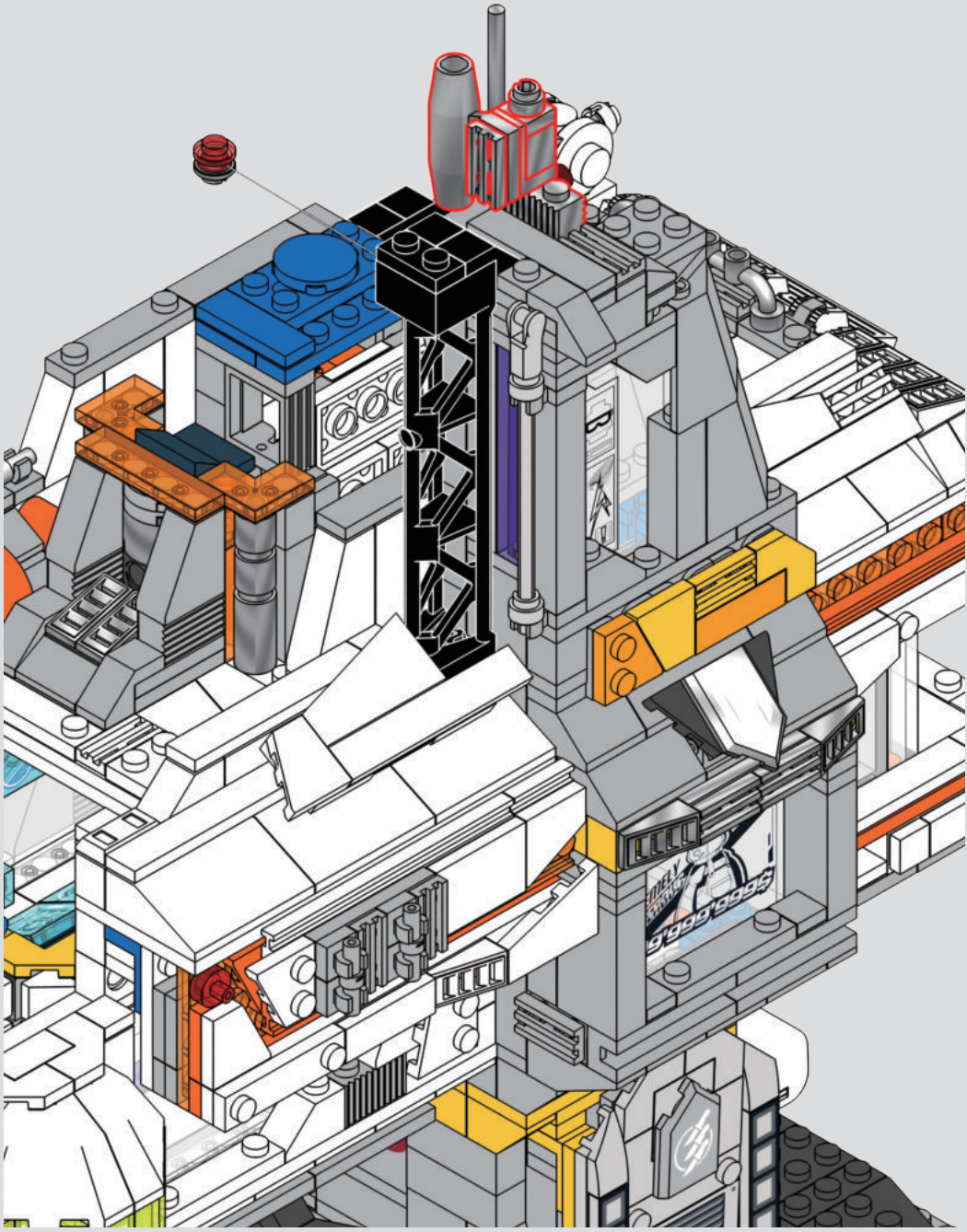

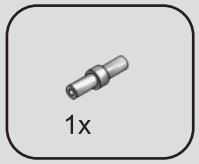

190

1

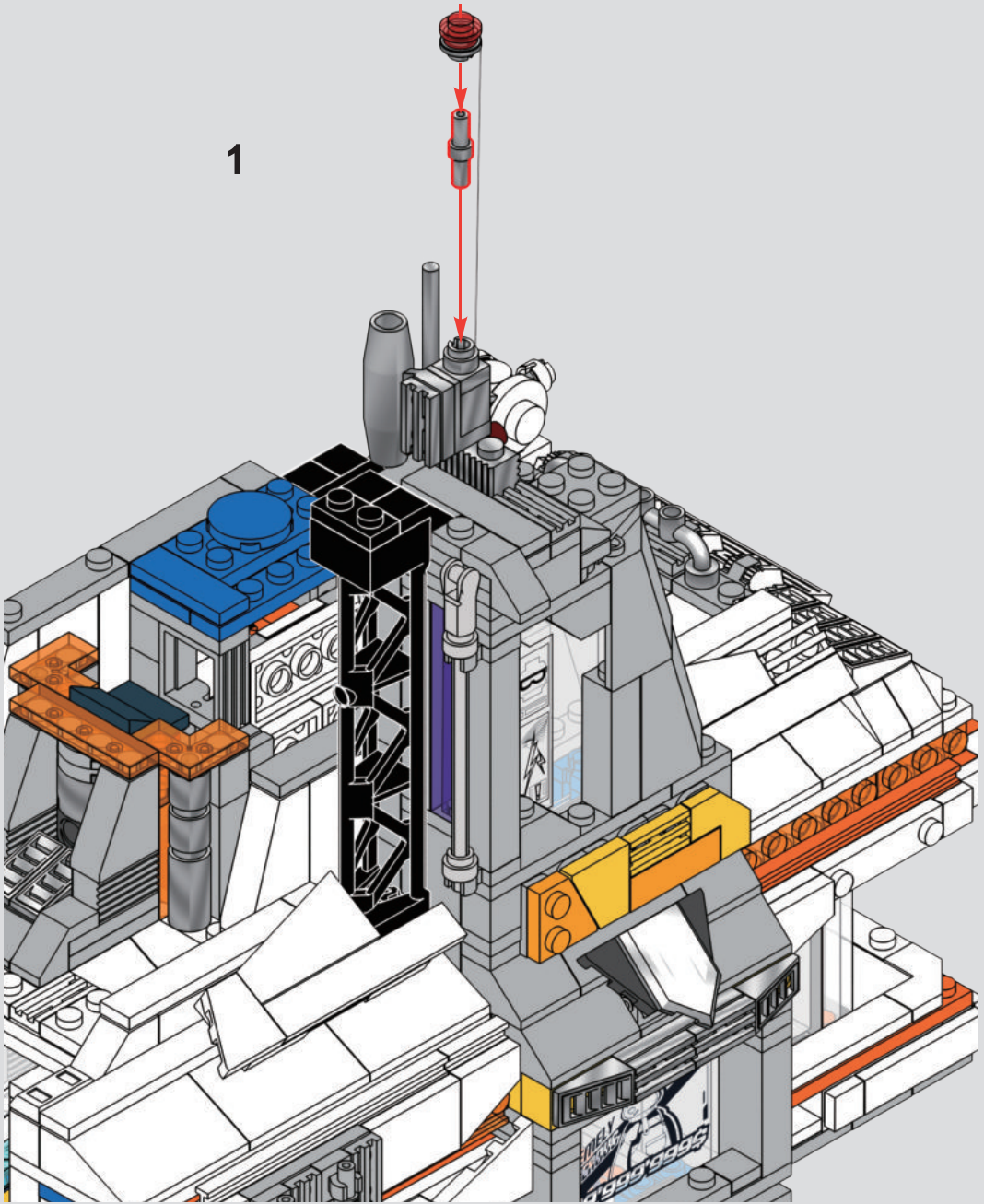

2

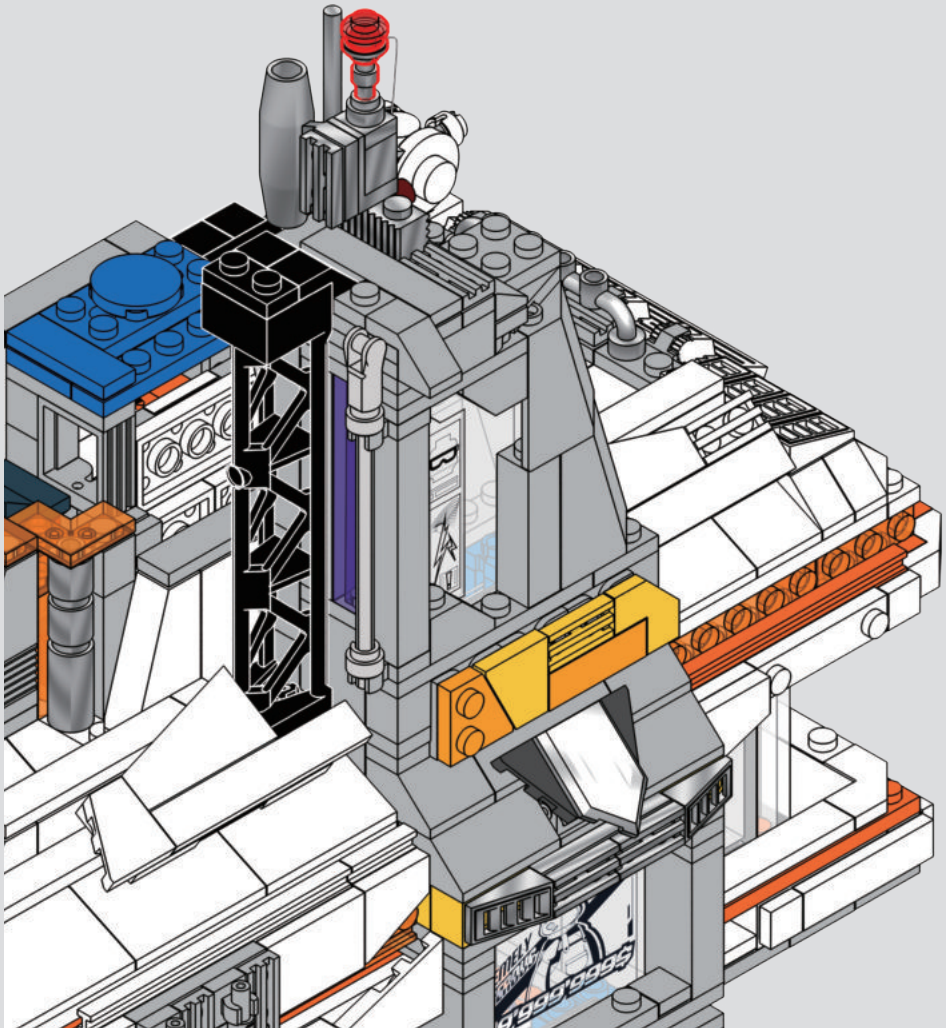

3

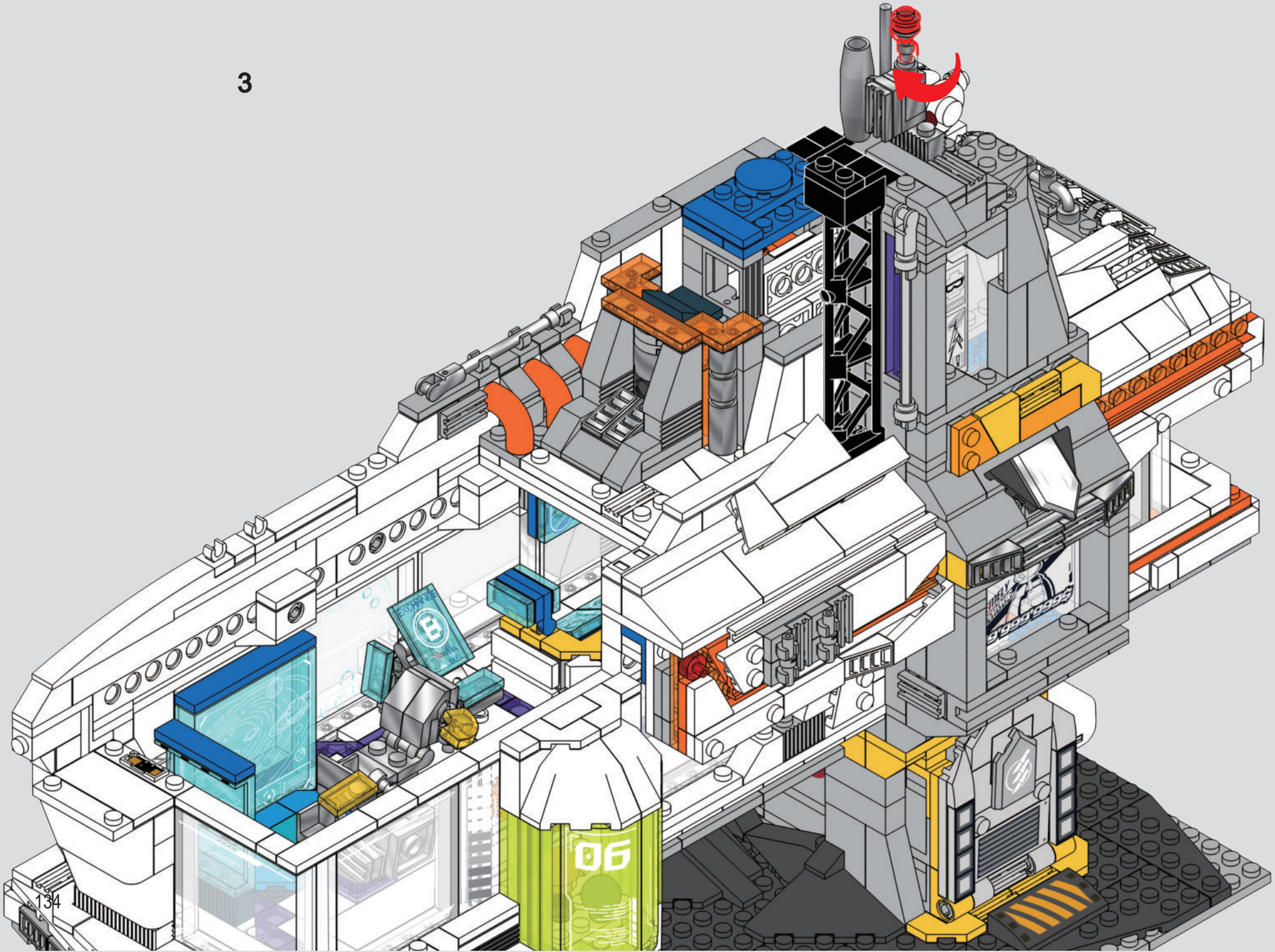

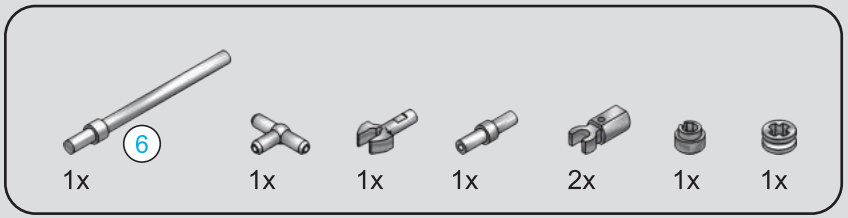

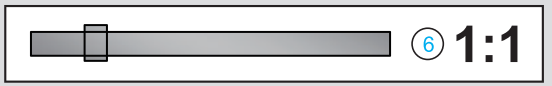

191

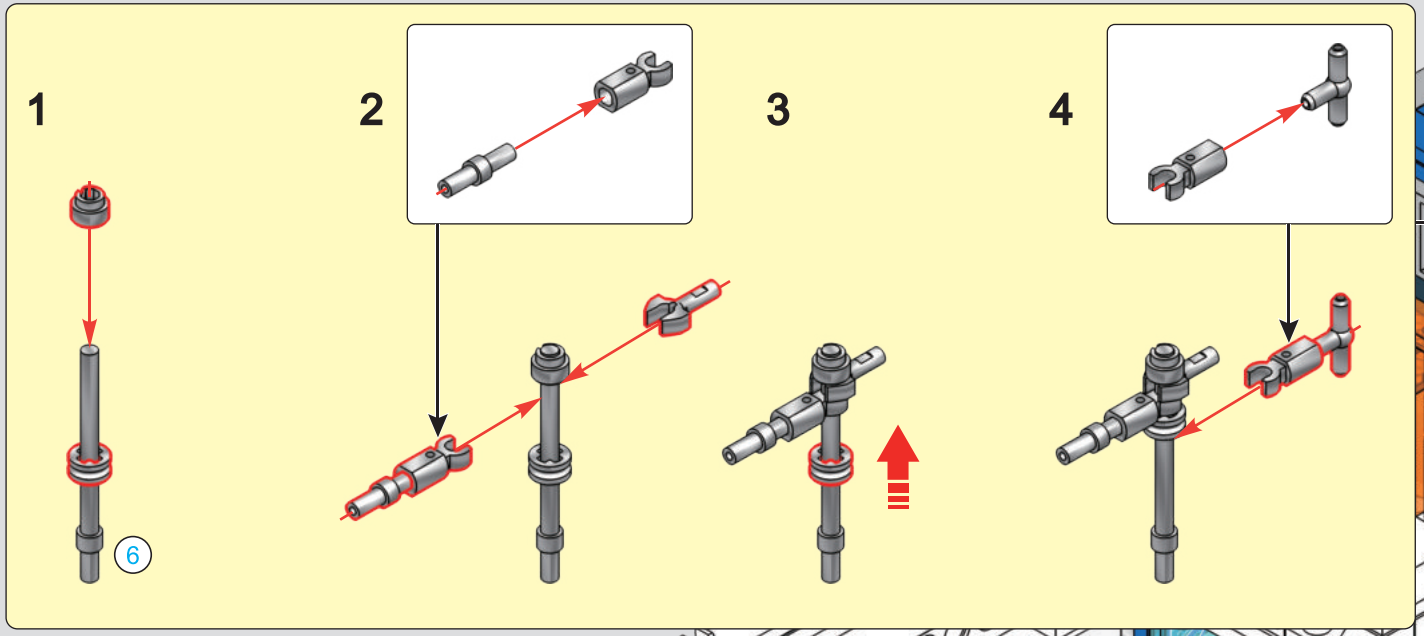

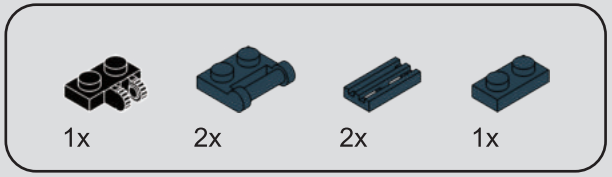

192



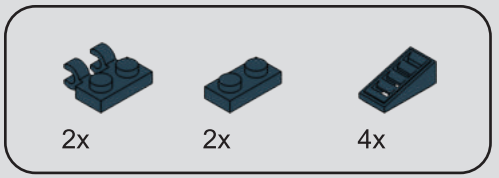

193

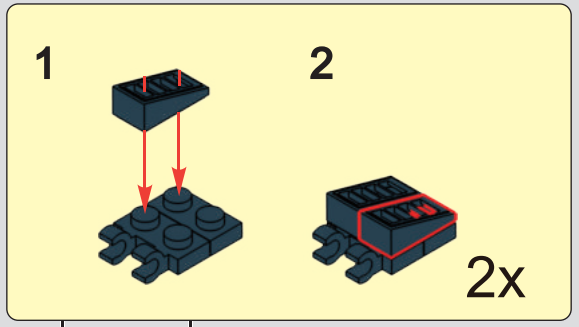

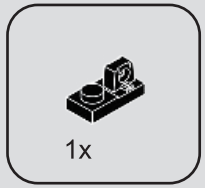

194

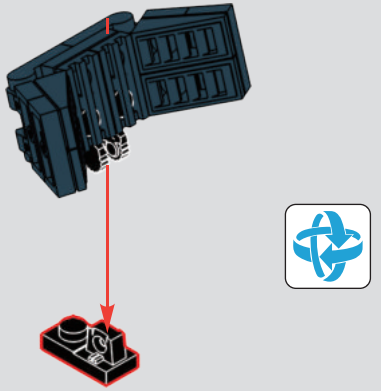

195

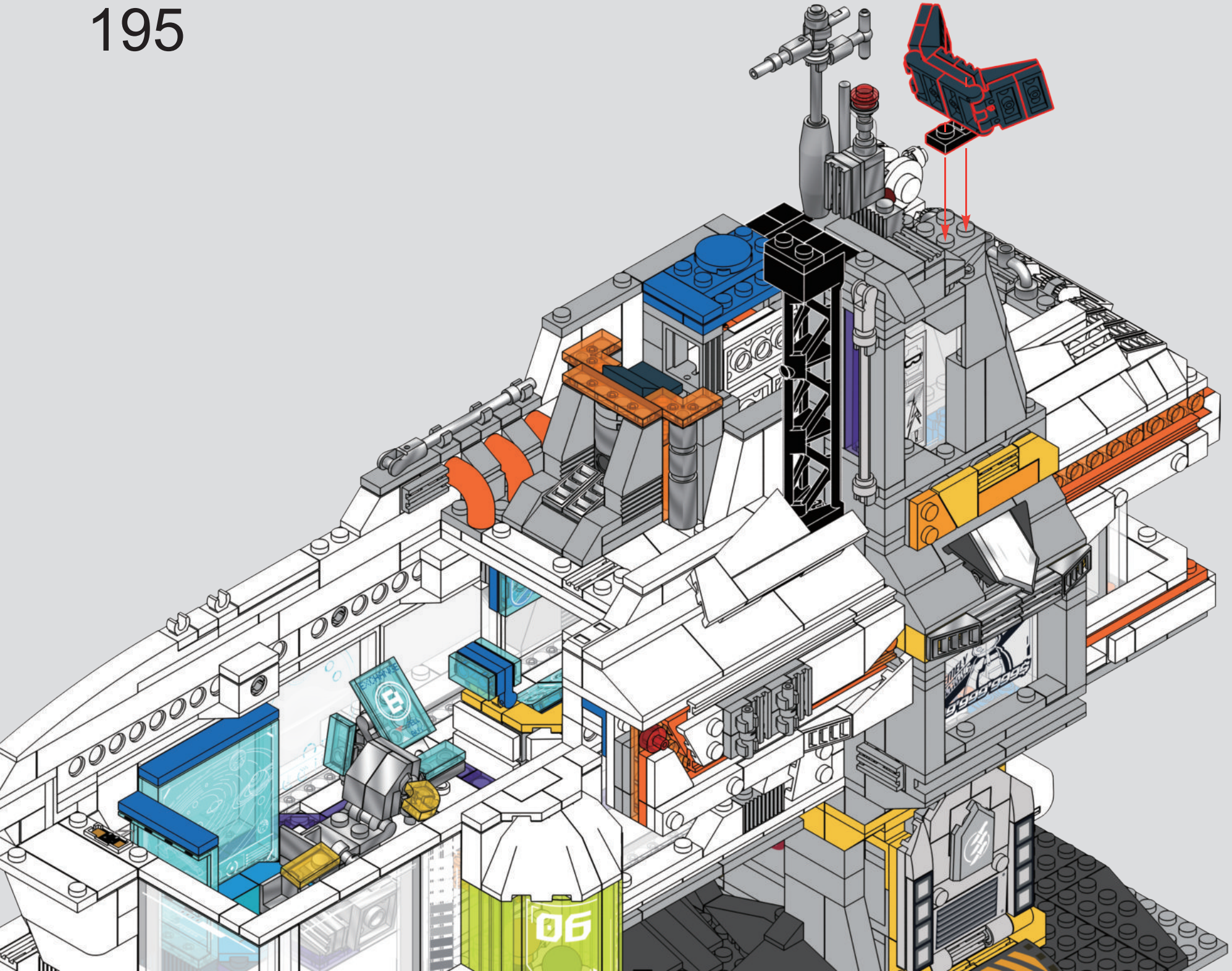

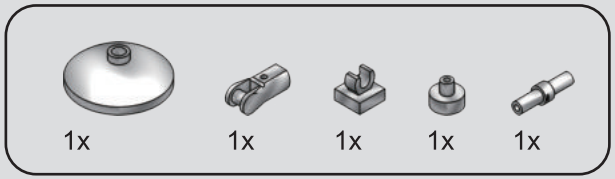

196

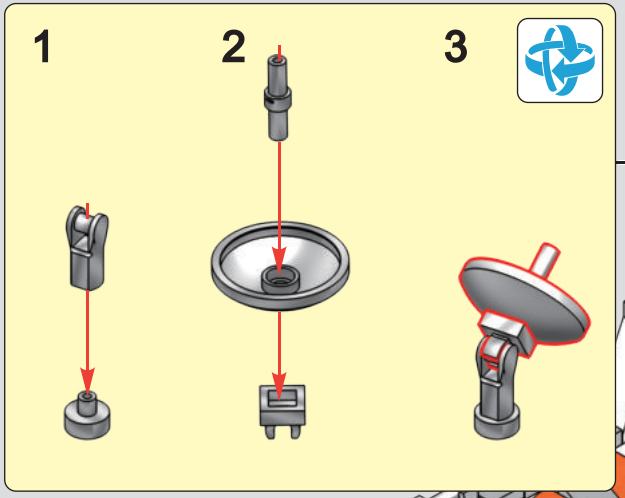


11

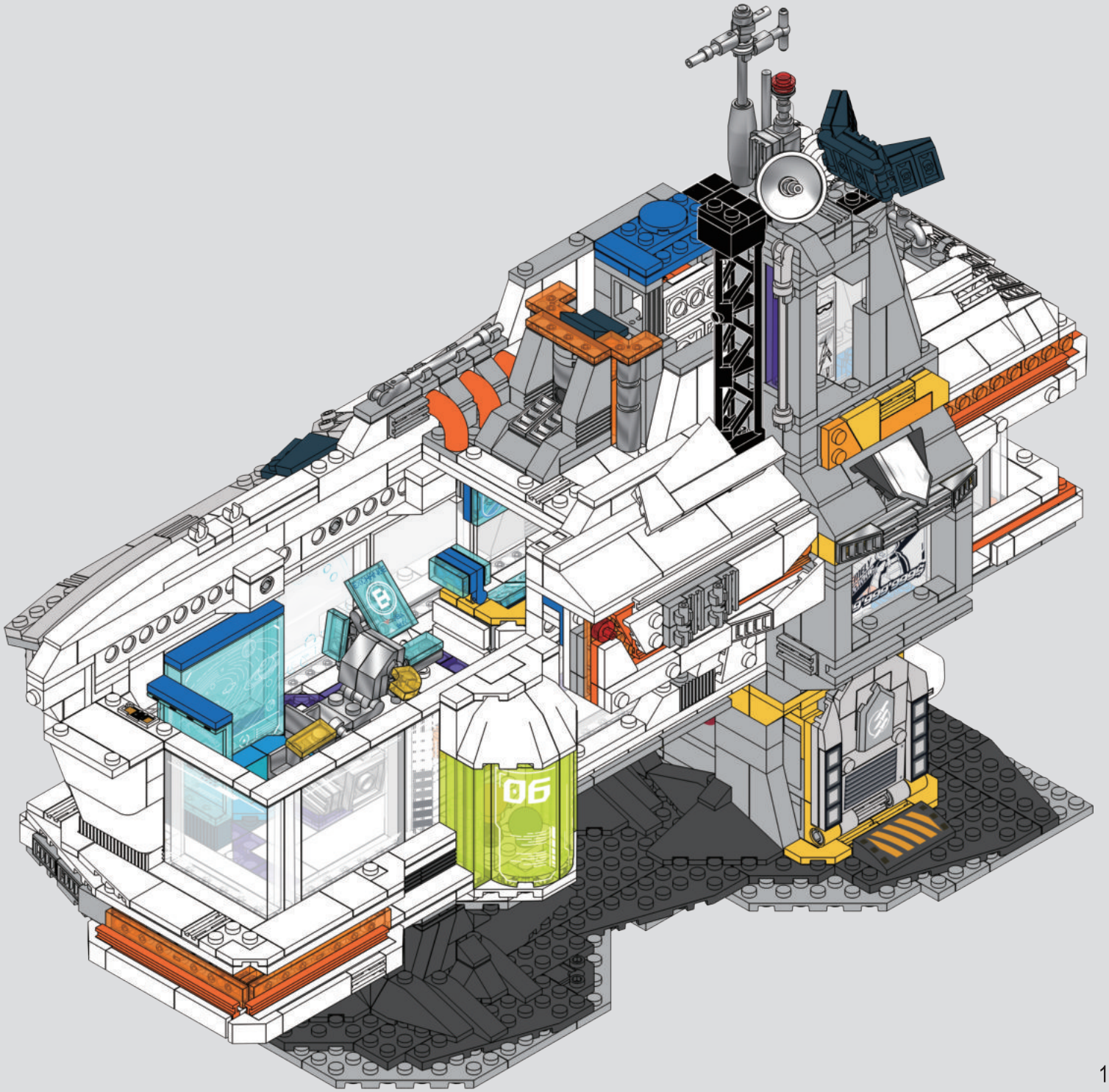
06

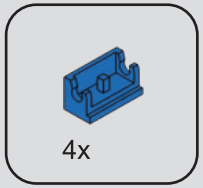

197



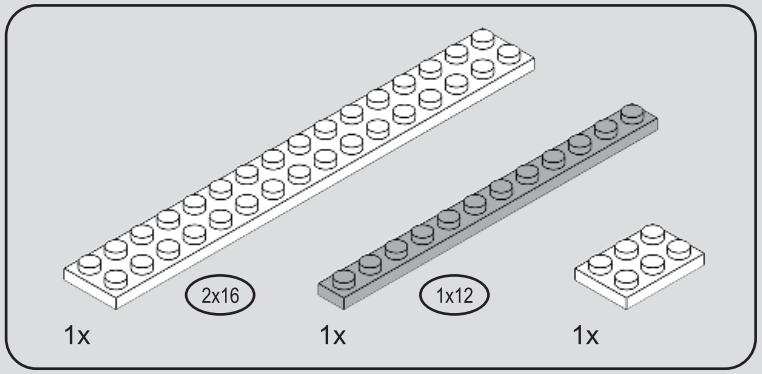

198

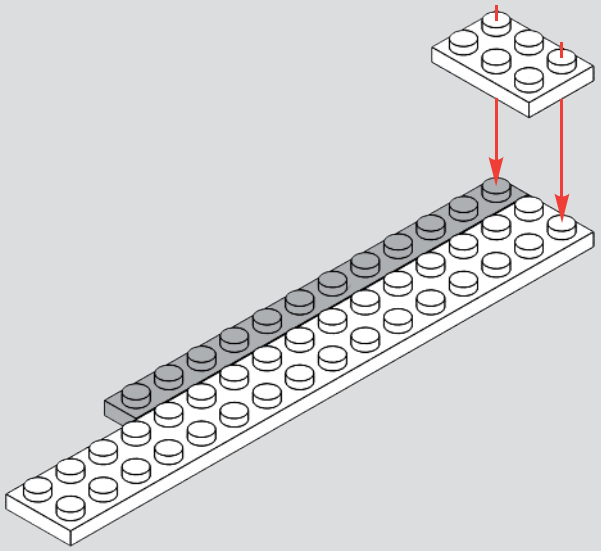

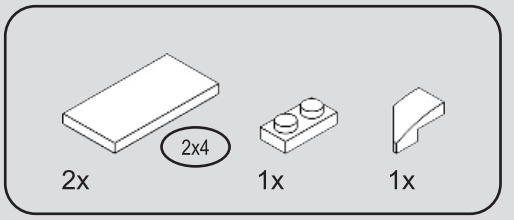

199

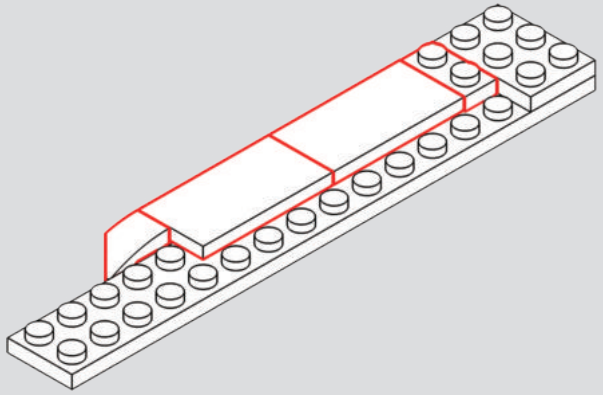

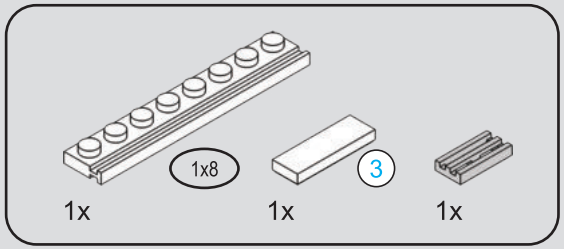

200

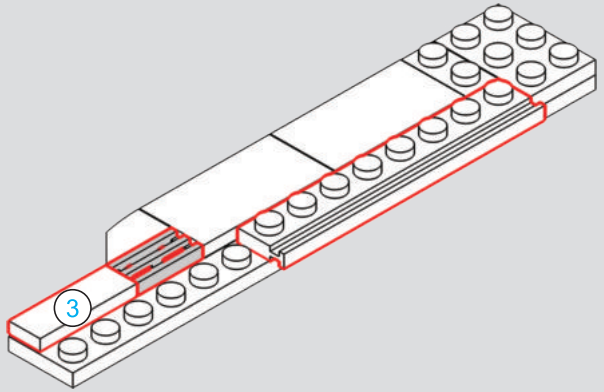

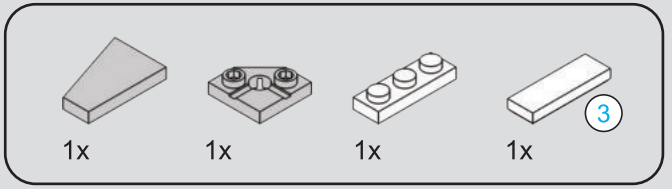

201

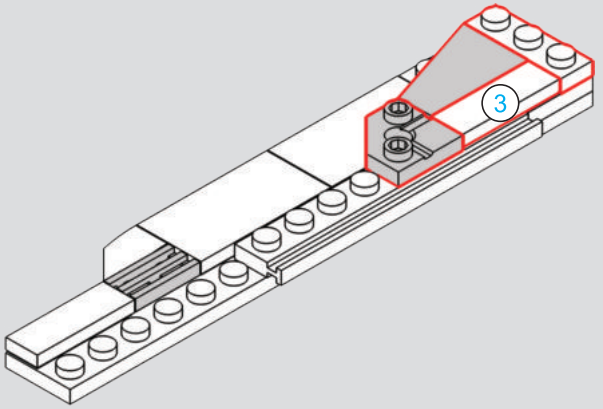

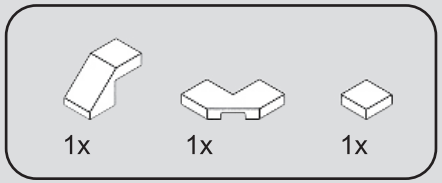

202

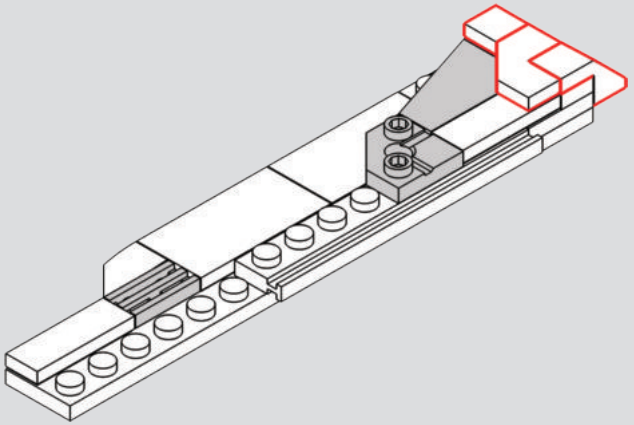

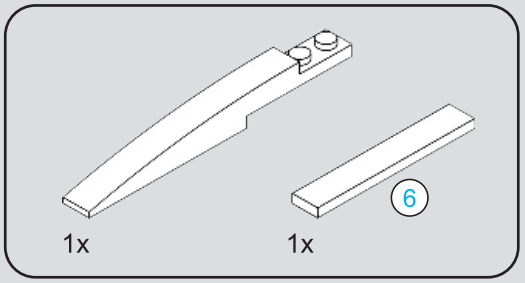

203

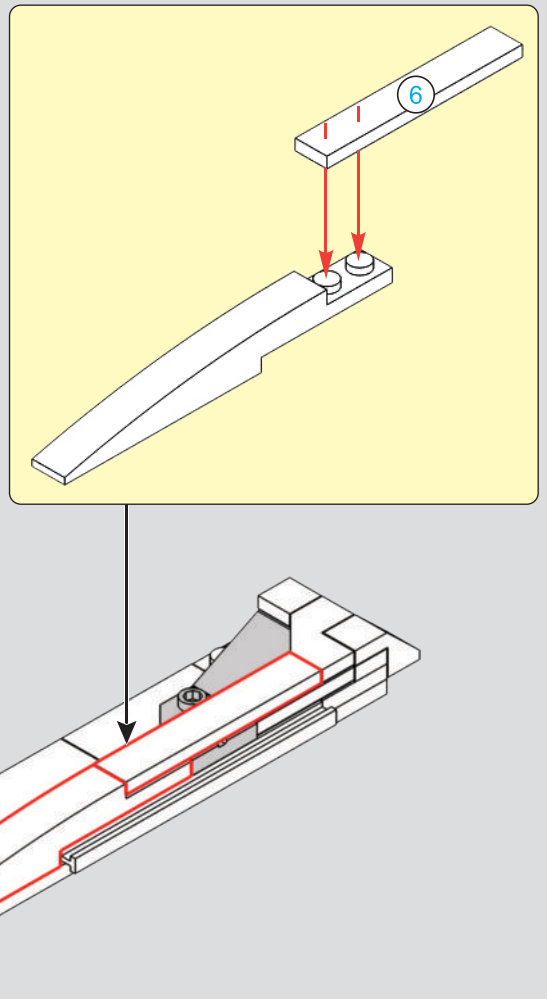

6 1:1

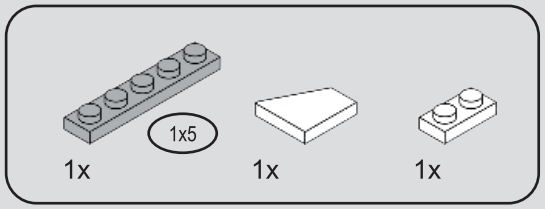

204

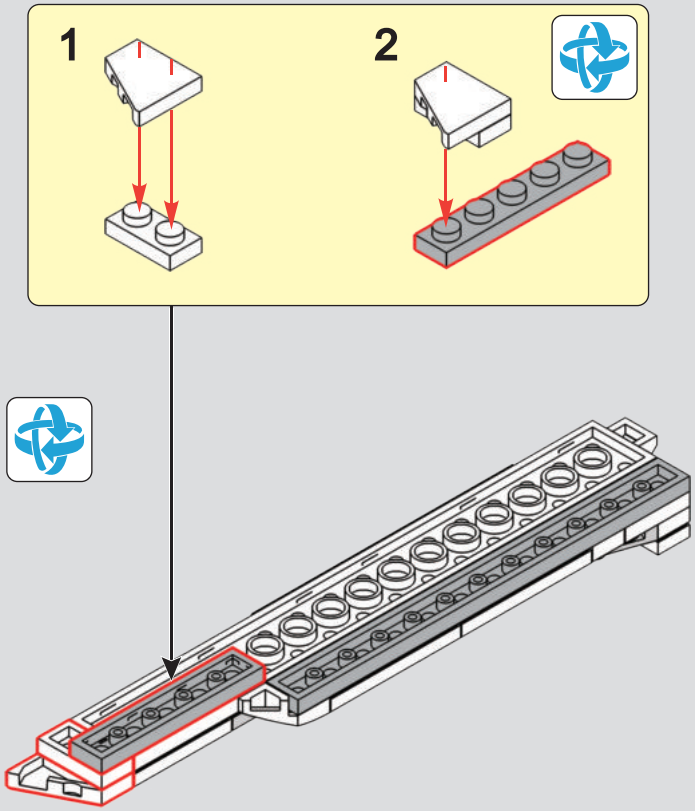

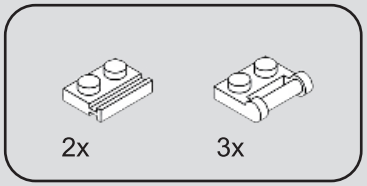

205

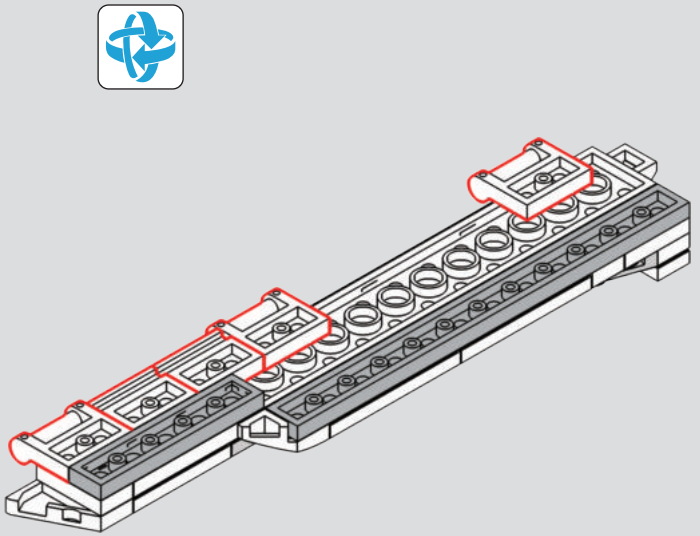

206

1

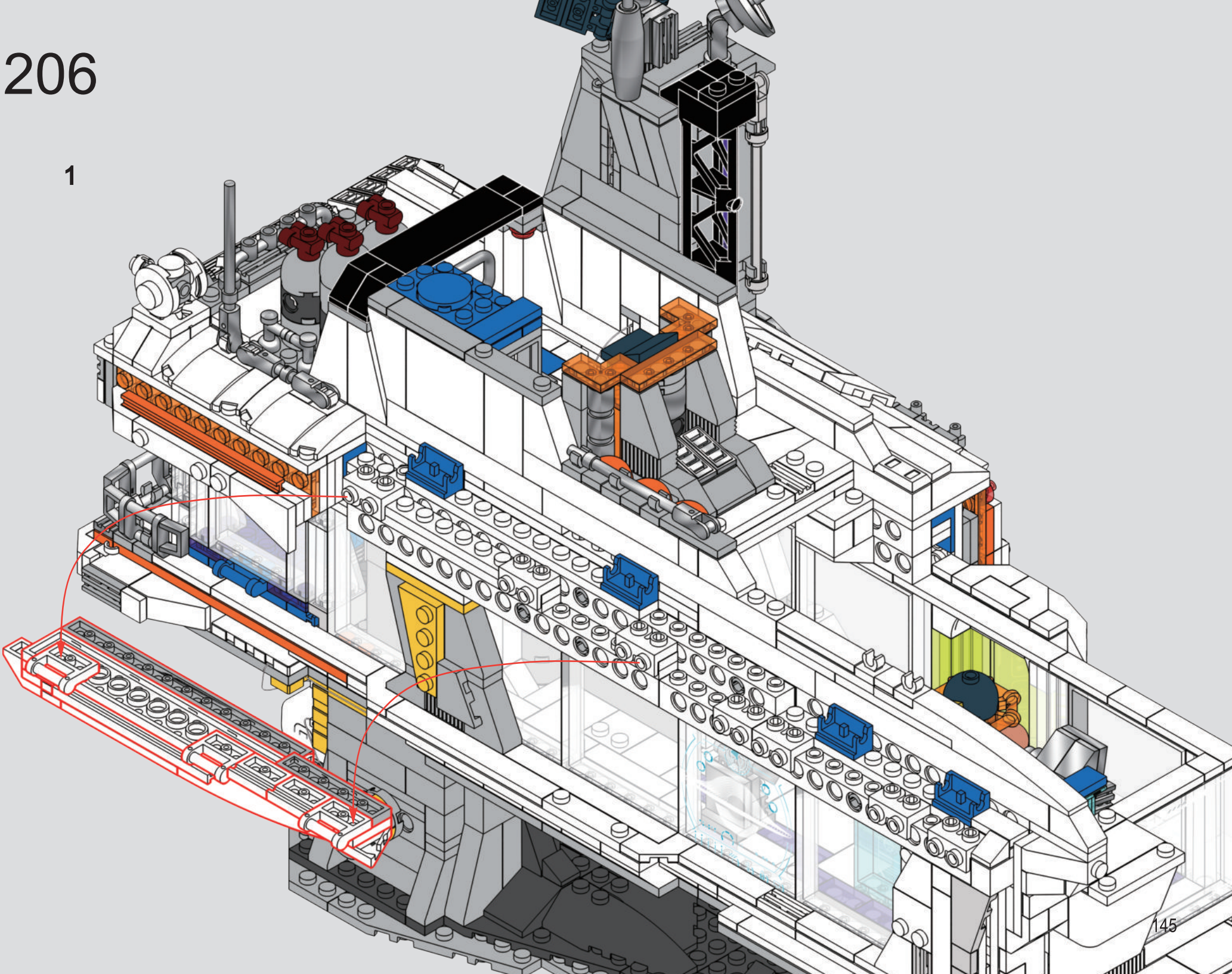

2

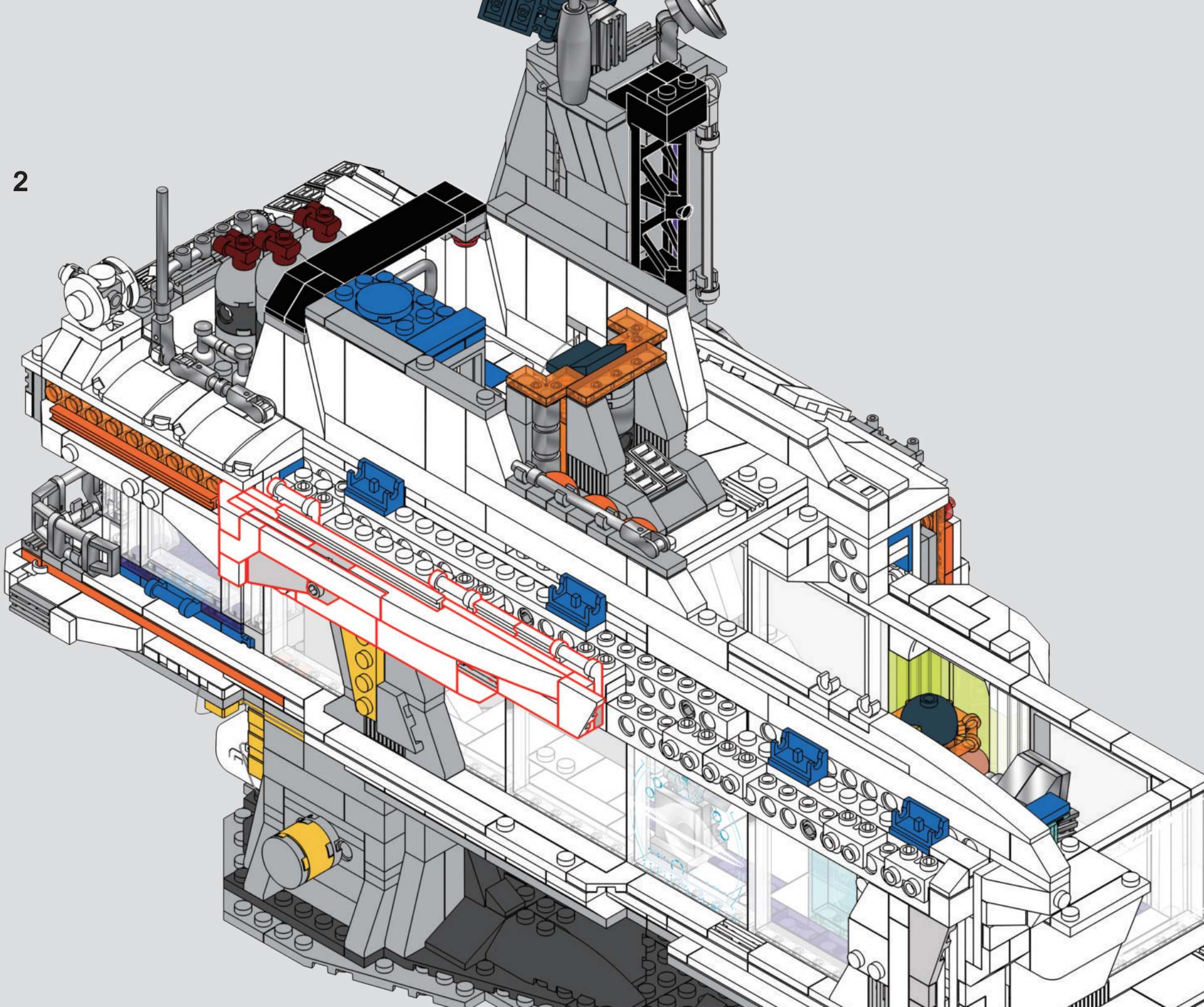

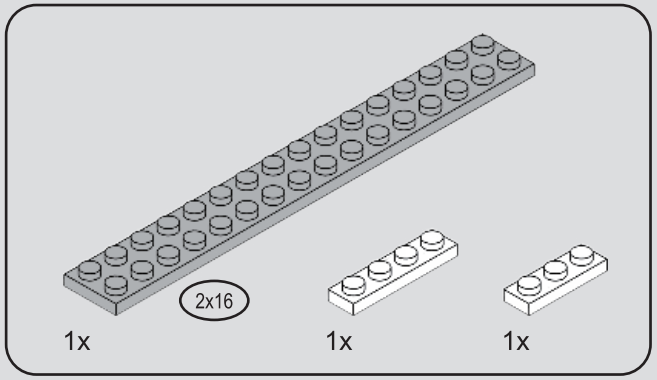

207

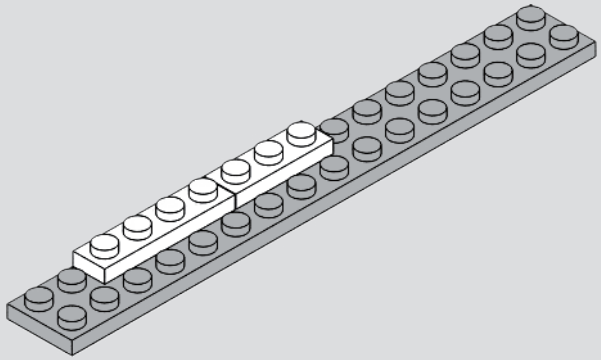

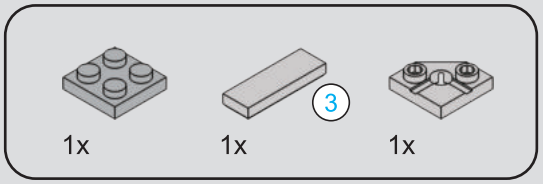

208

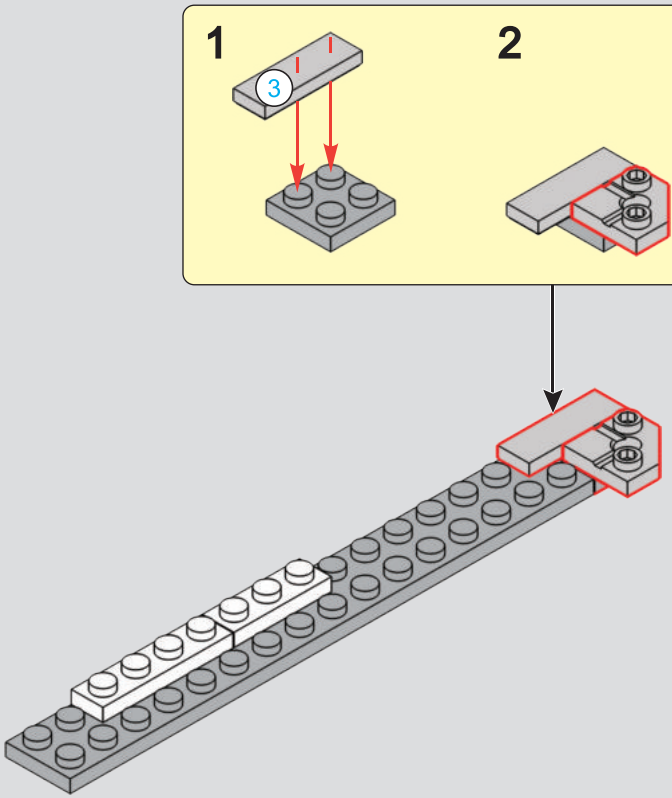

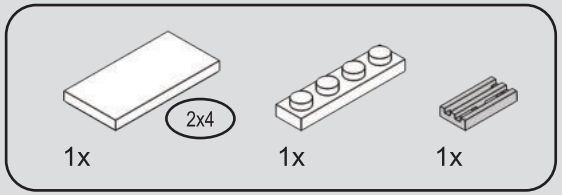

209

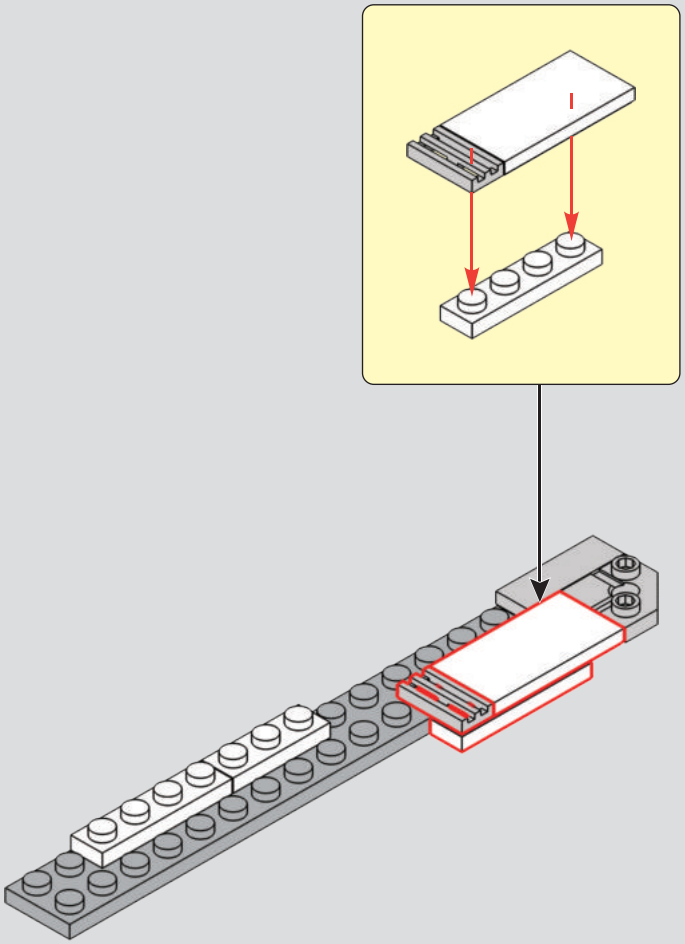

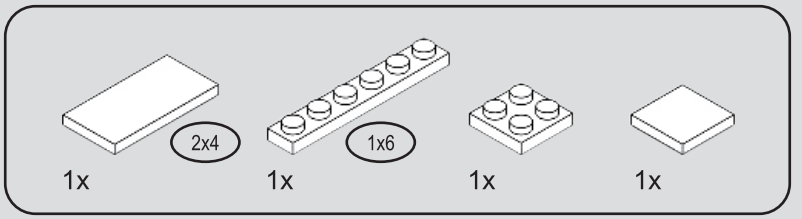

210

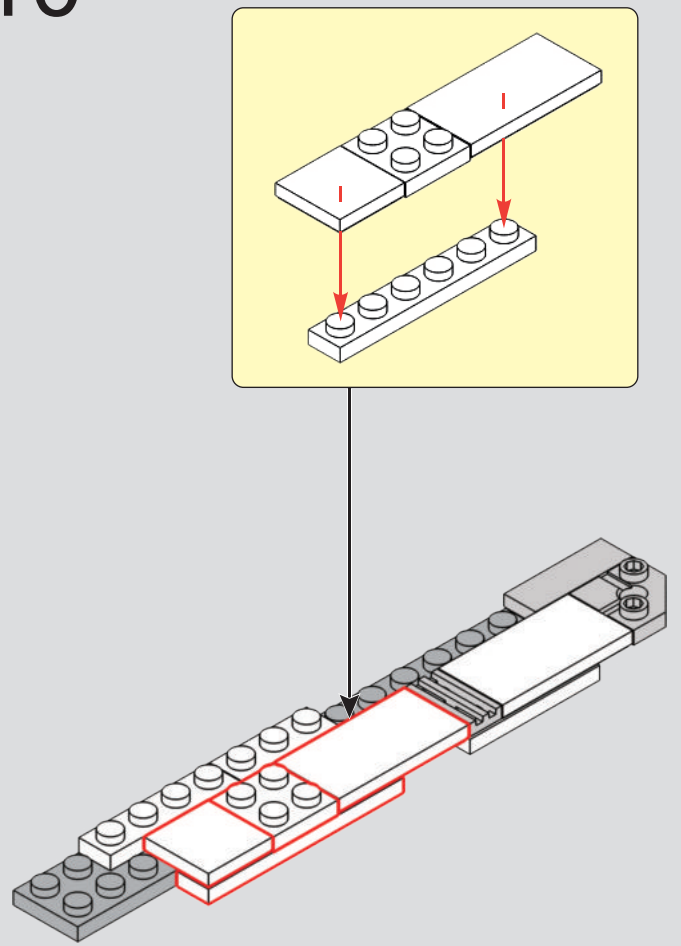

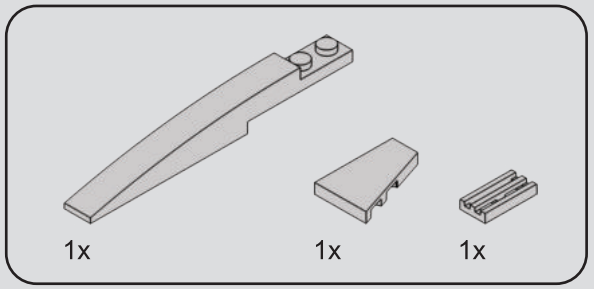

211

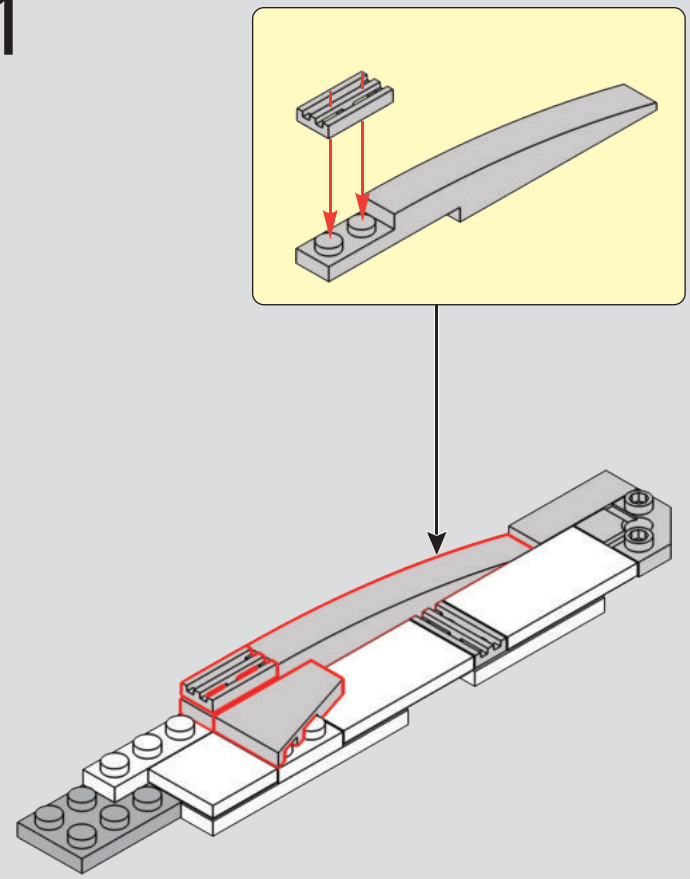

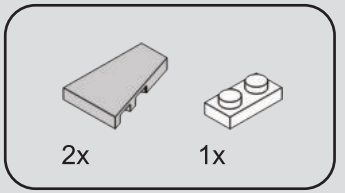

212

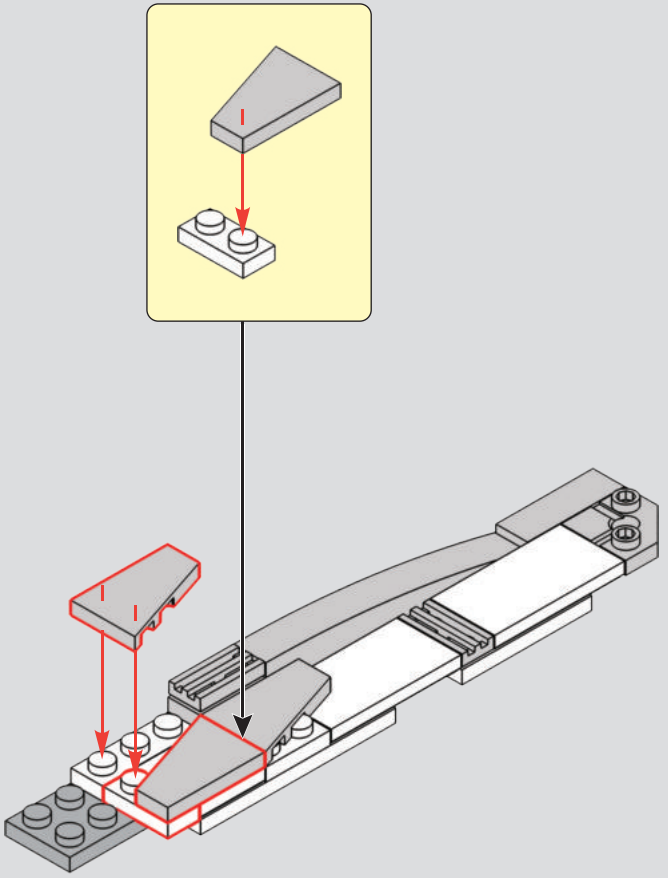

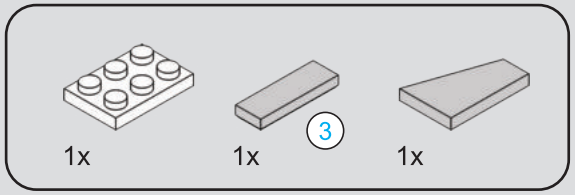

213

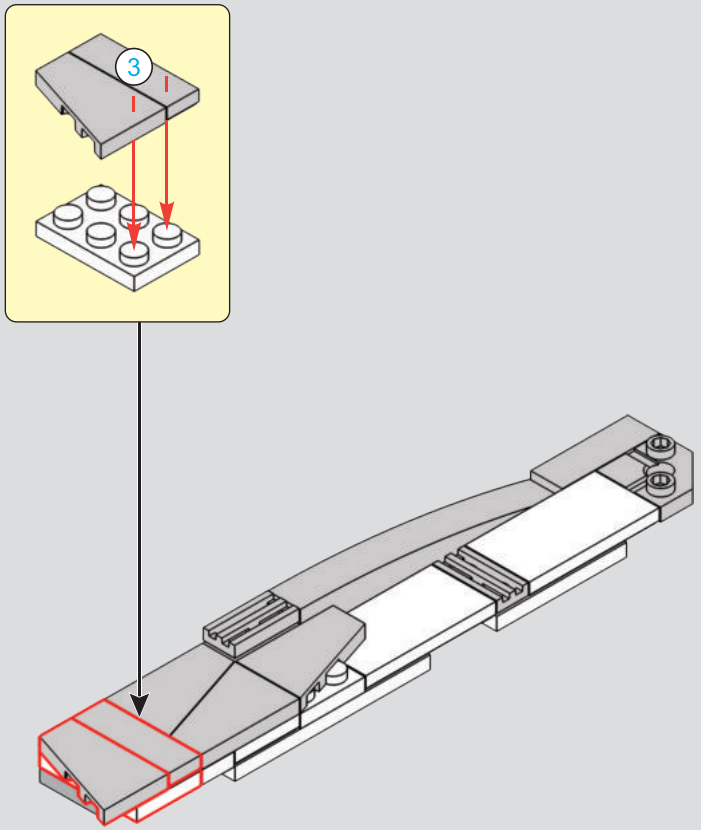

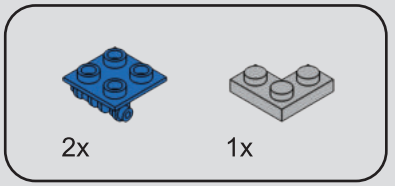

214

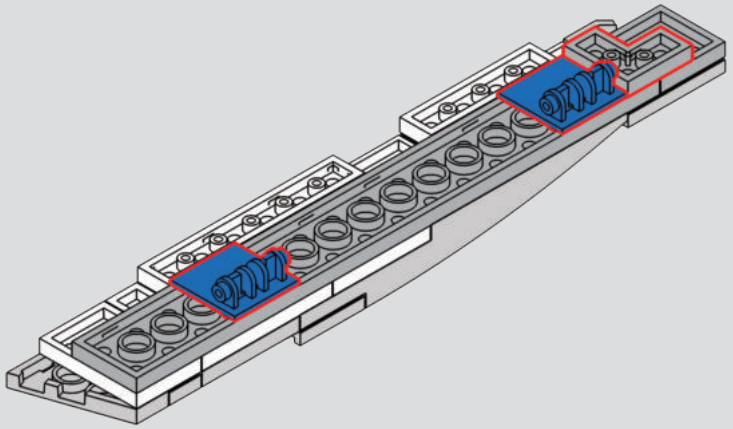

215

1

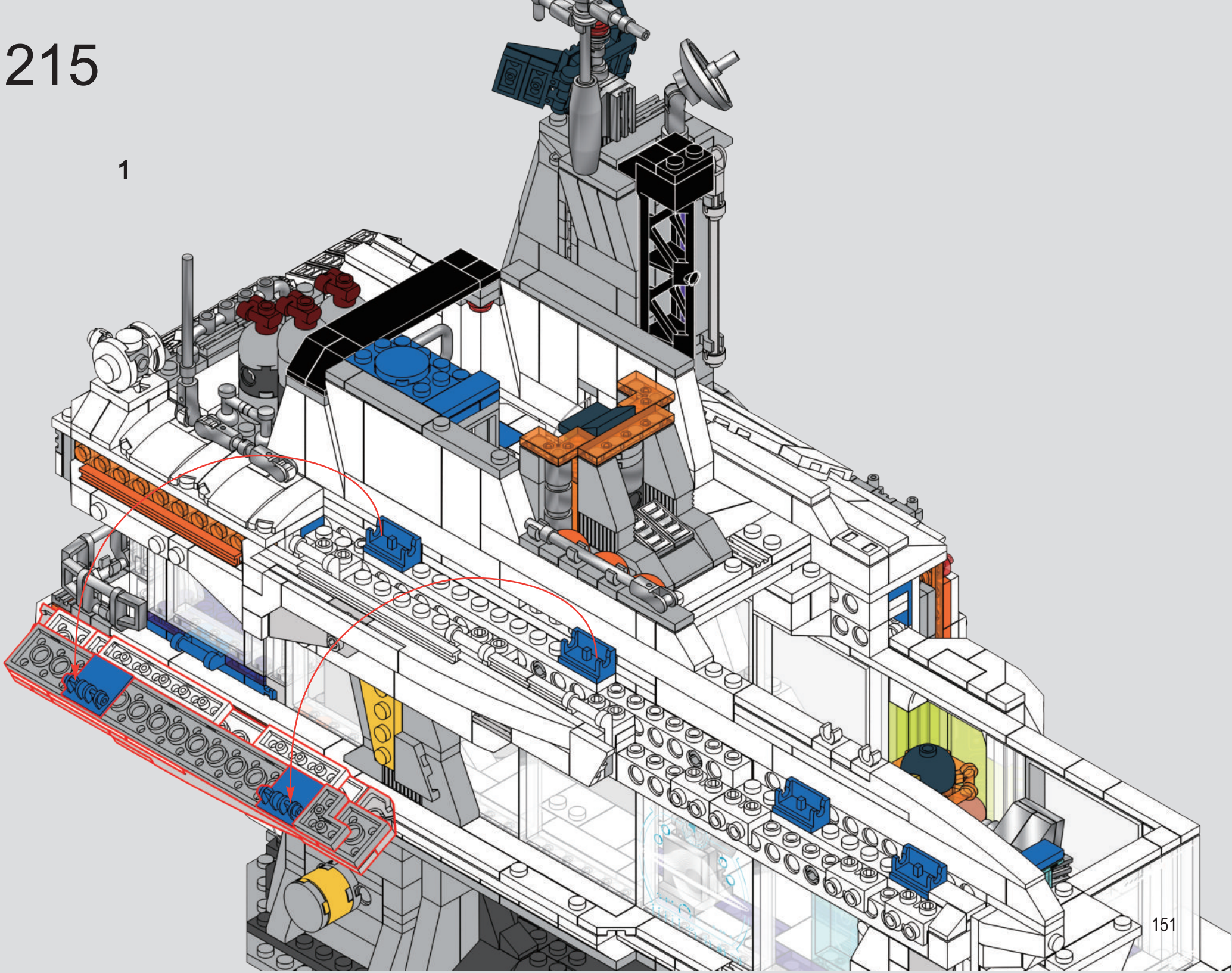

2

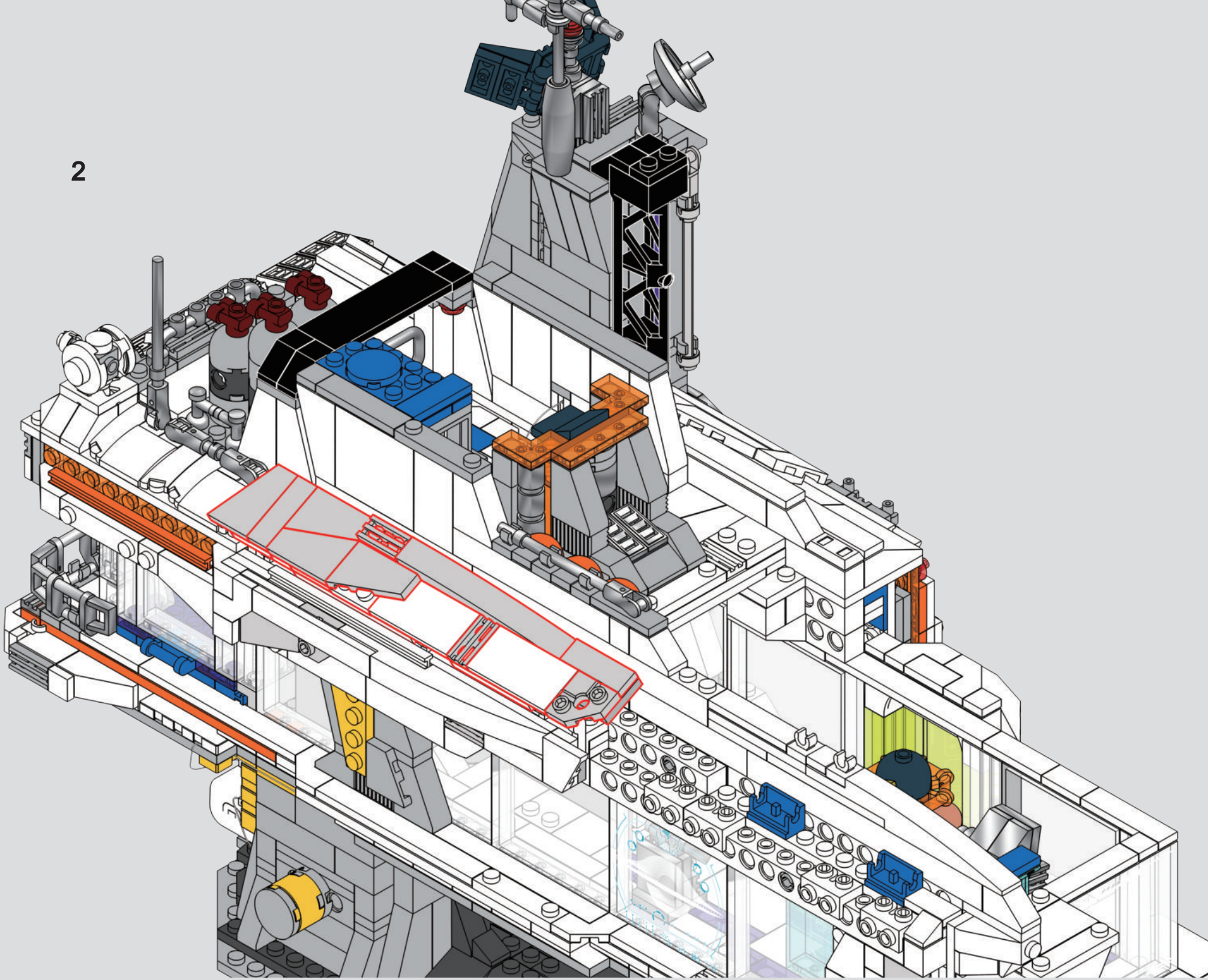

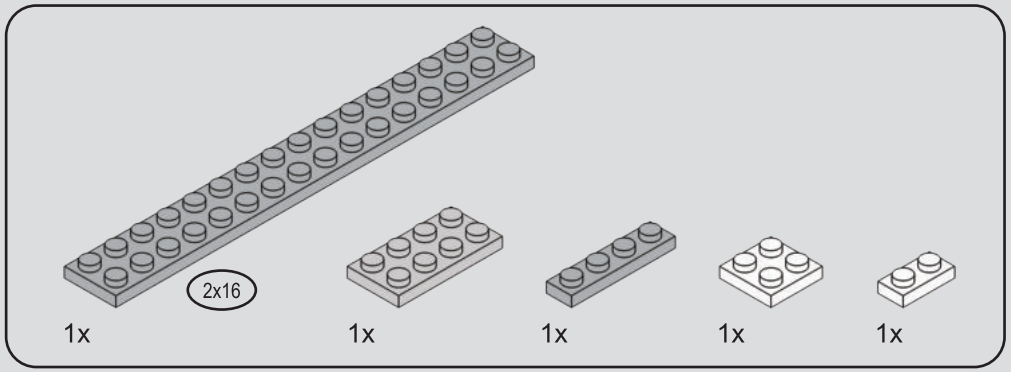

216

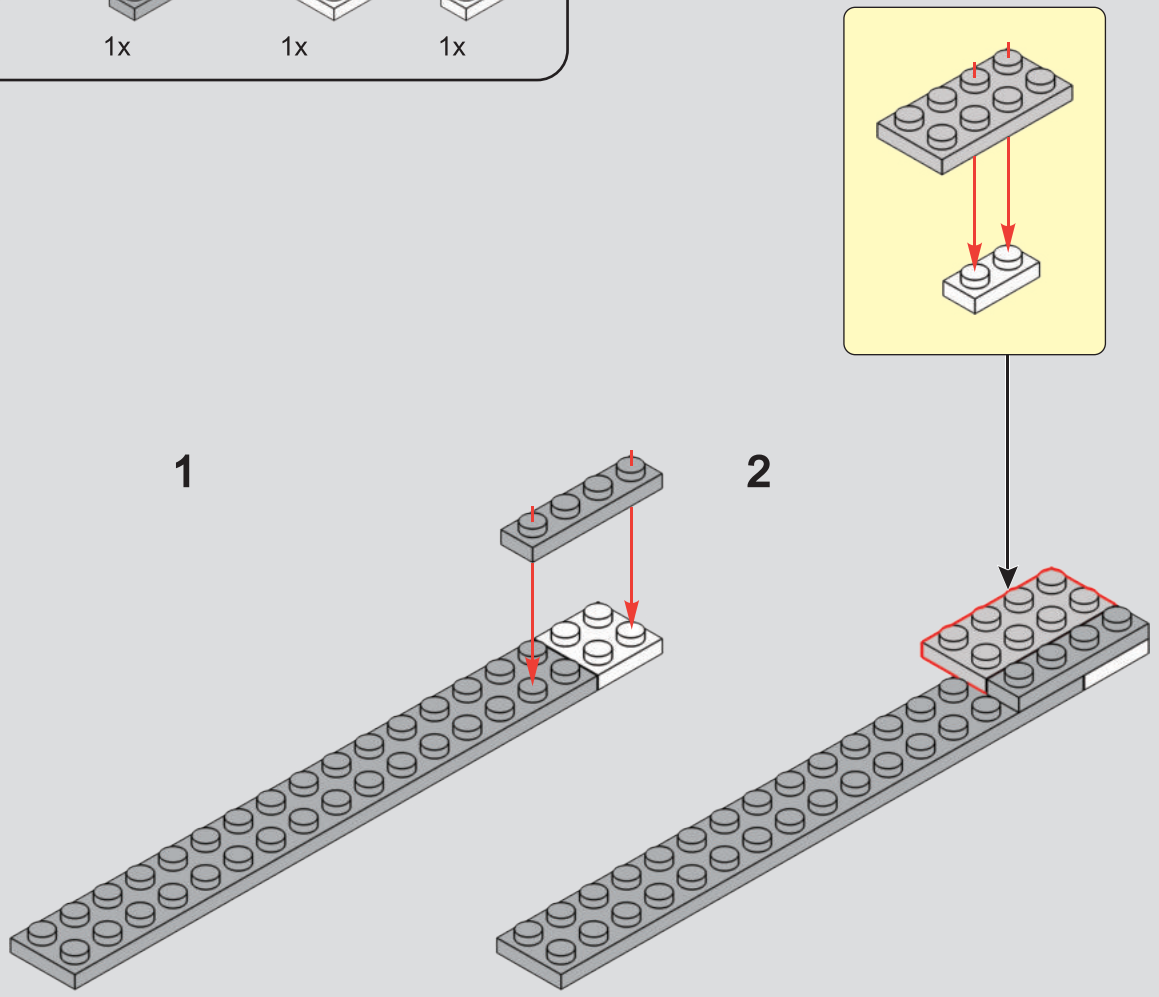

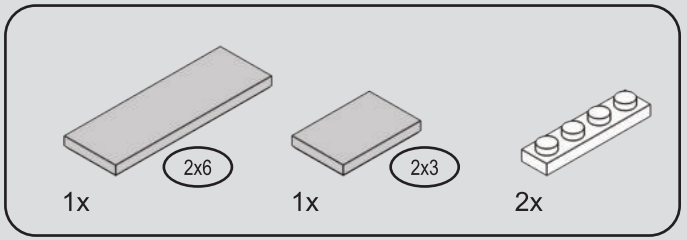

217

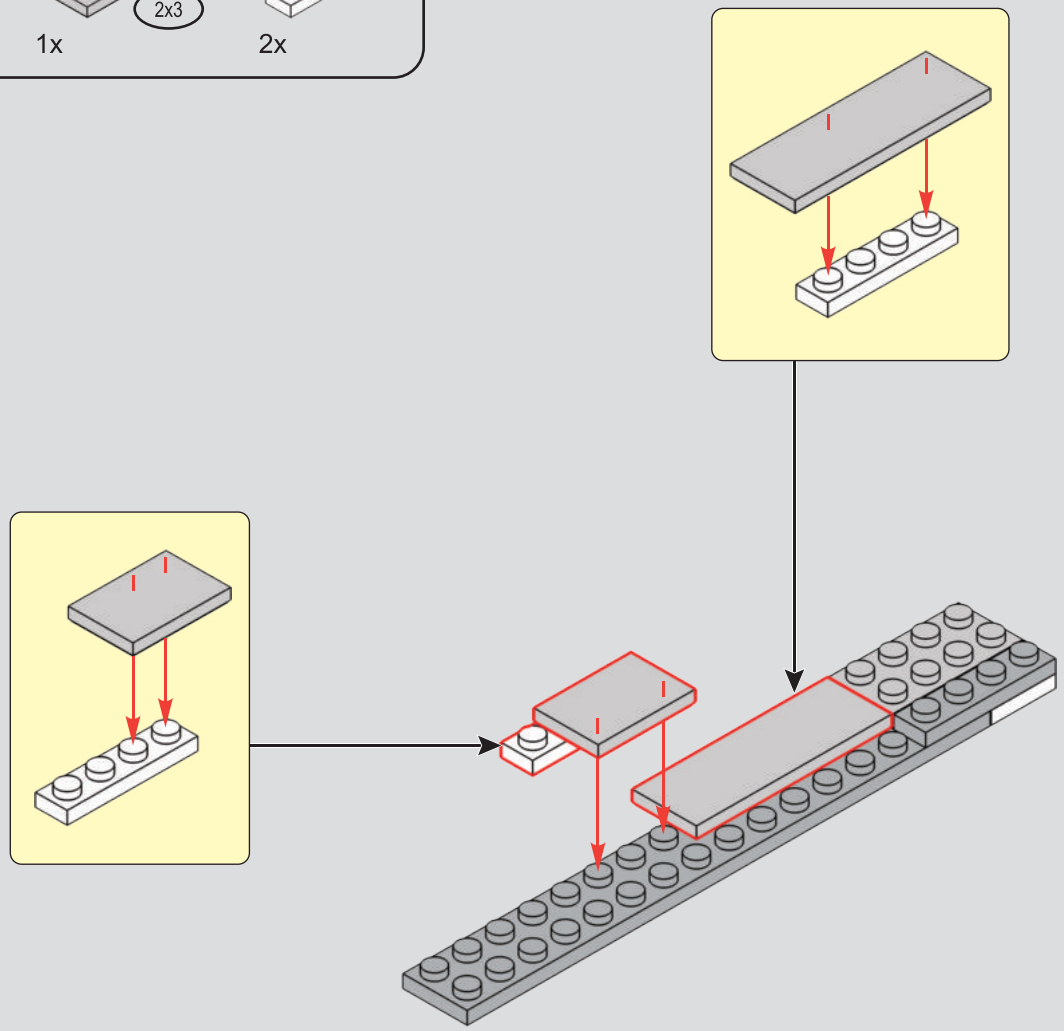

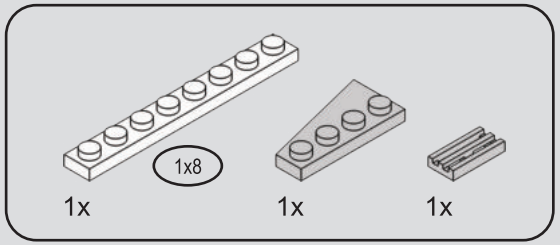

218

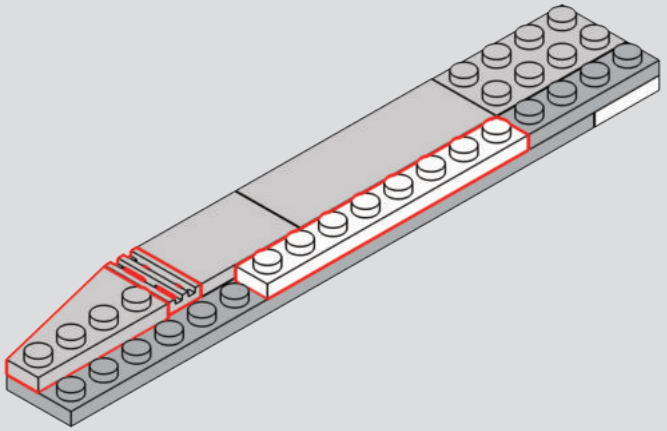

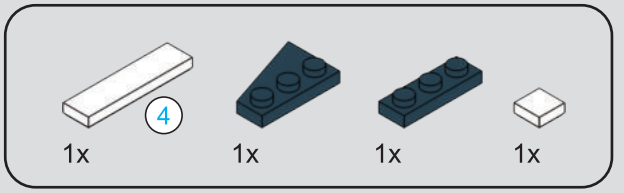

219

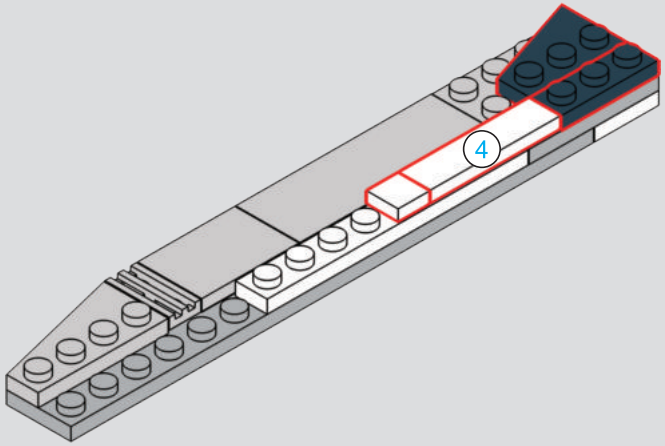

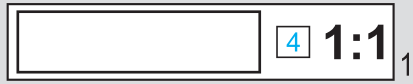

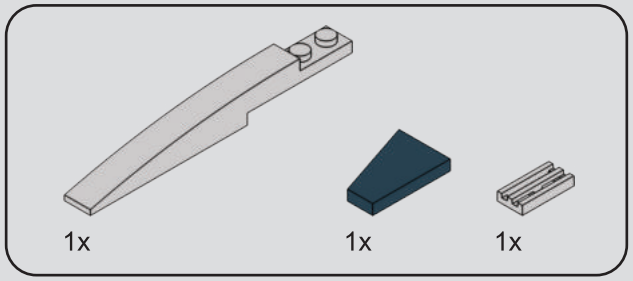

220

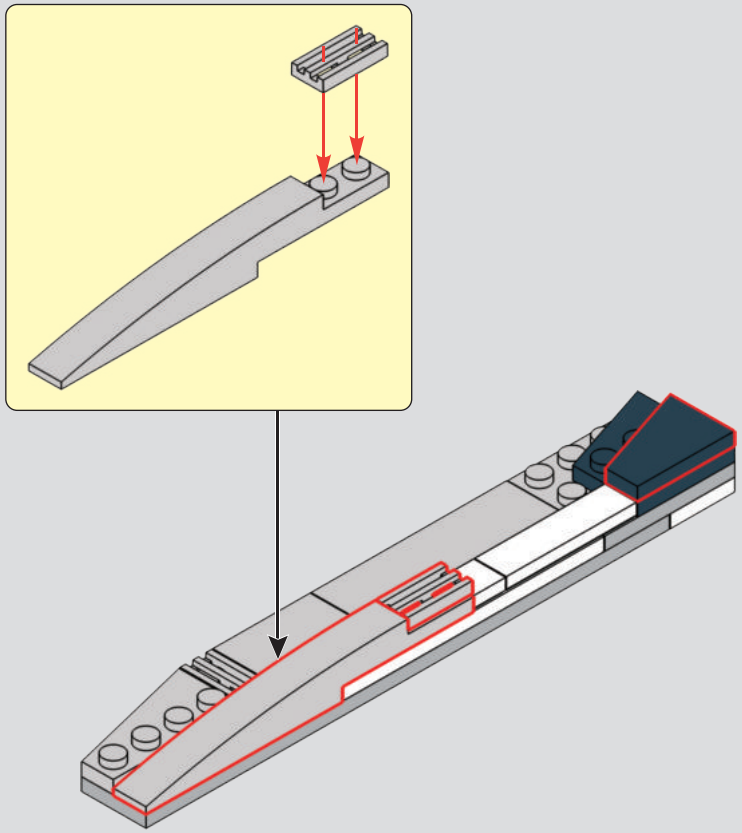

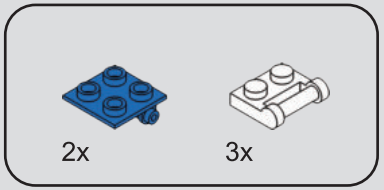

221

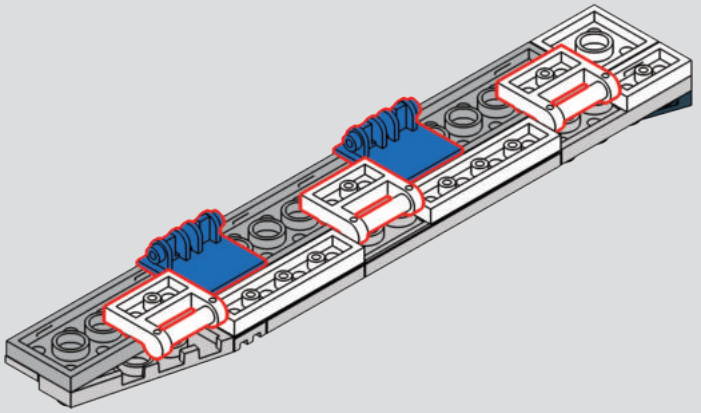

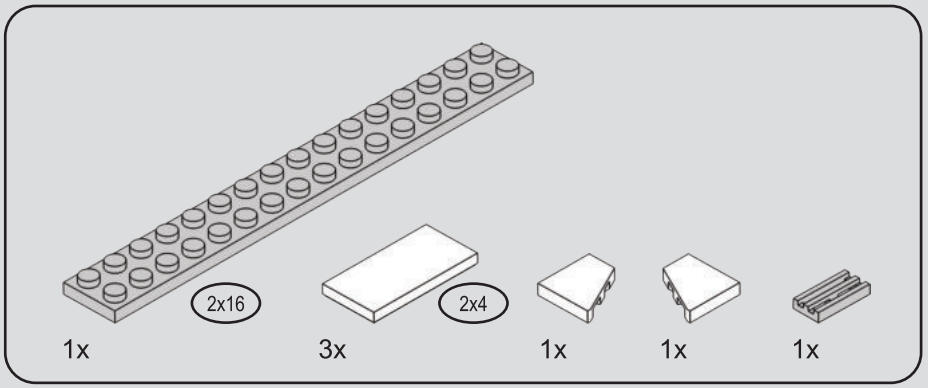

222

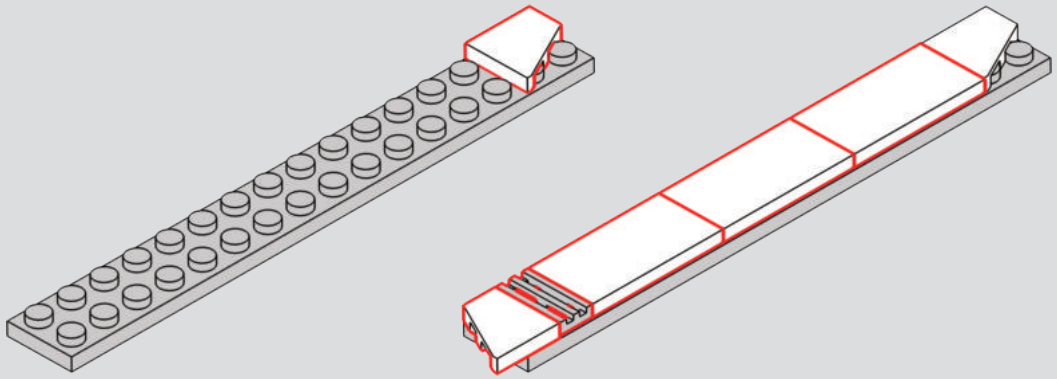

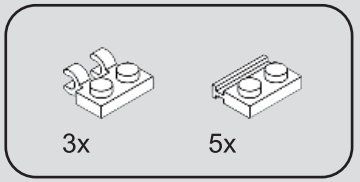

223

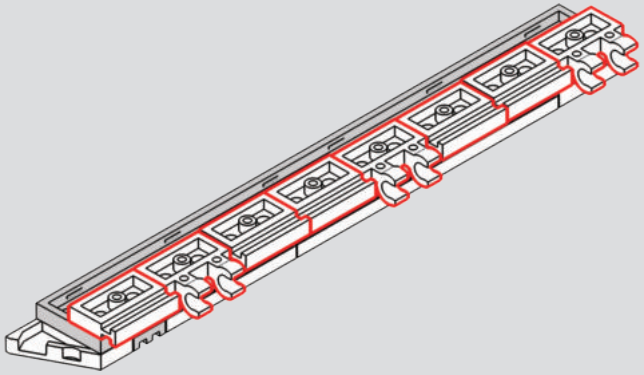

224

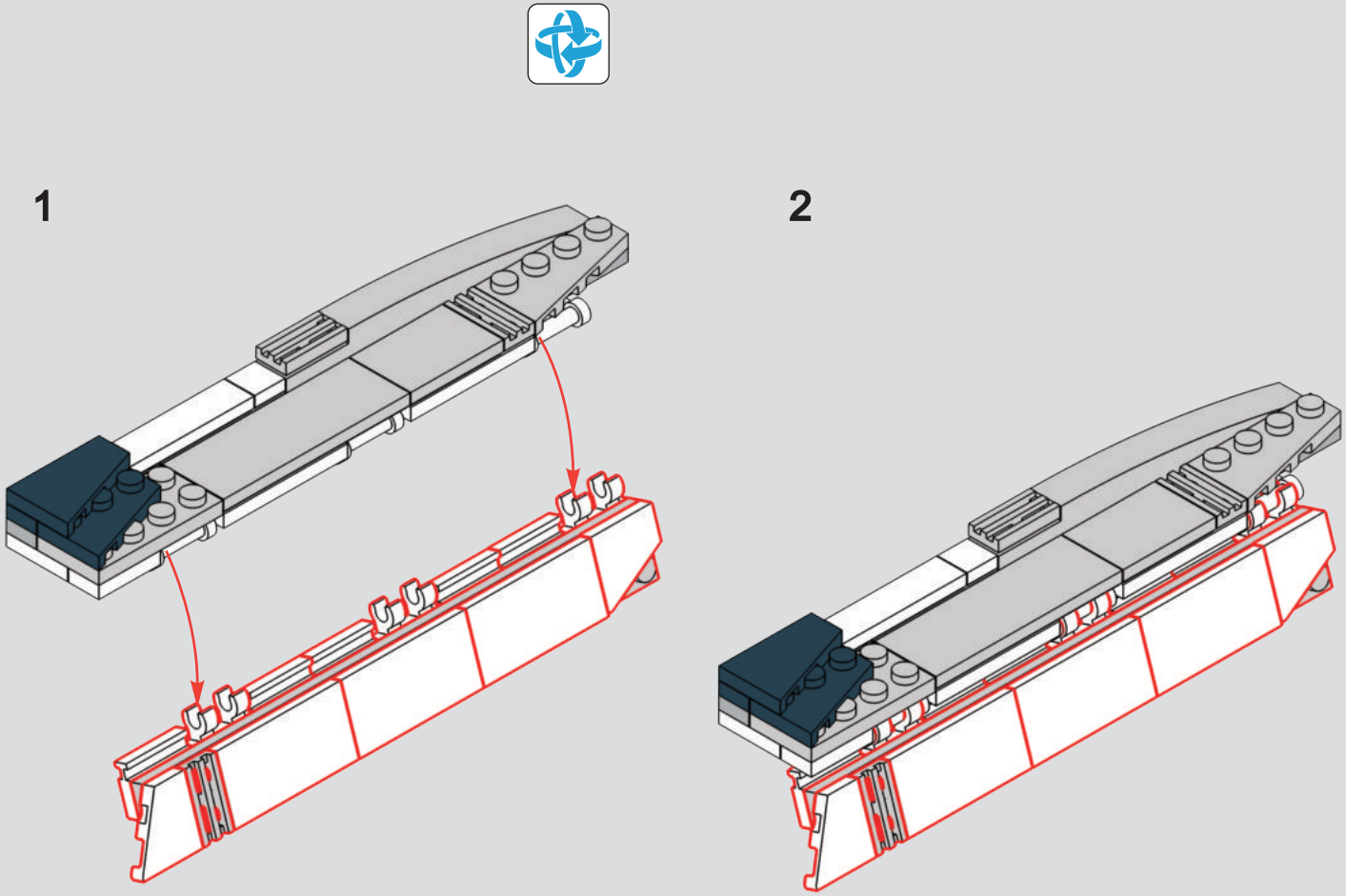

225

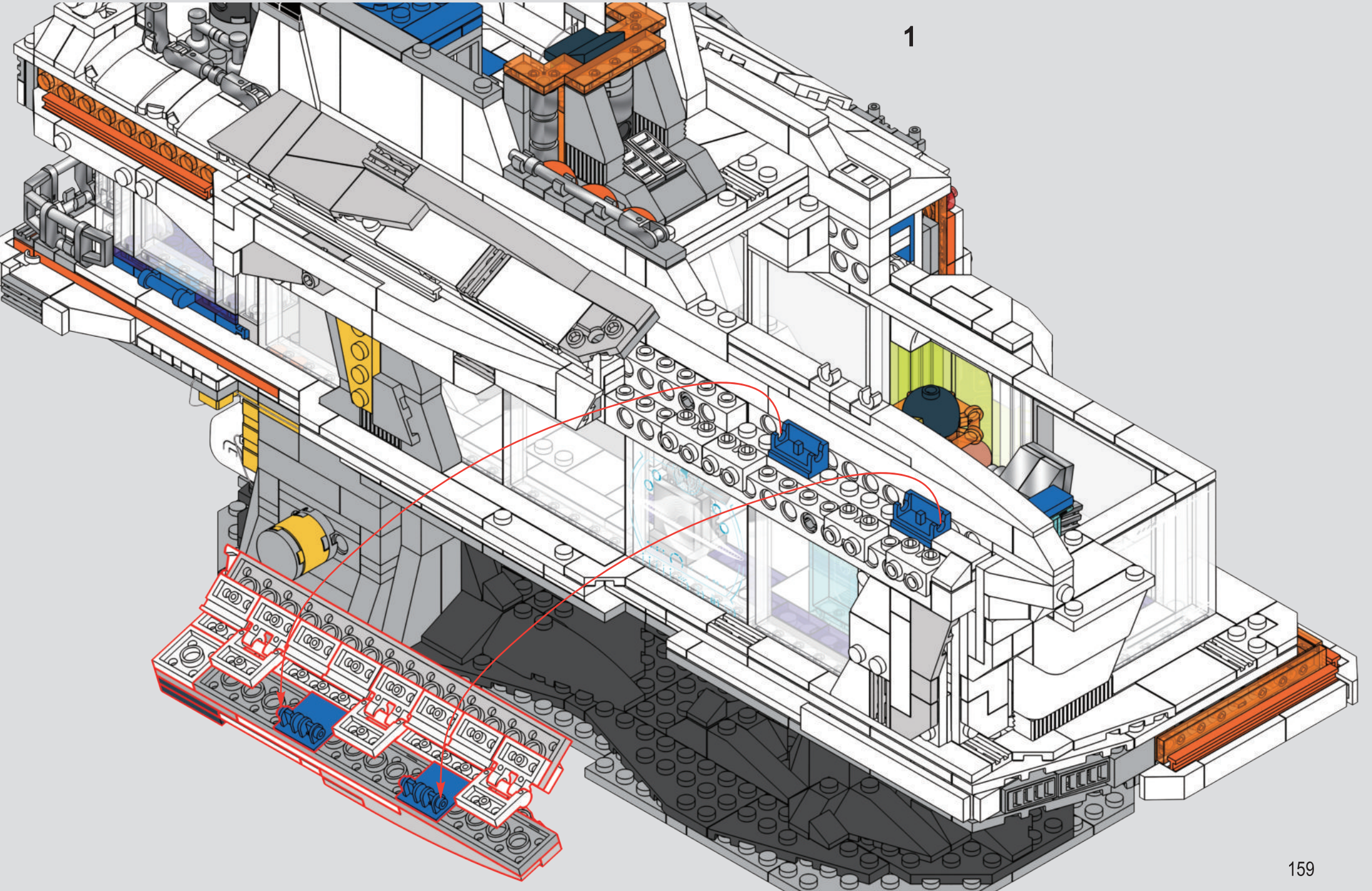

2

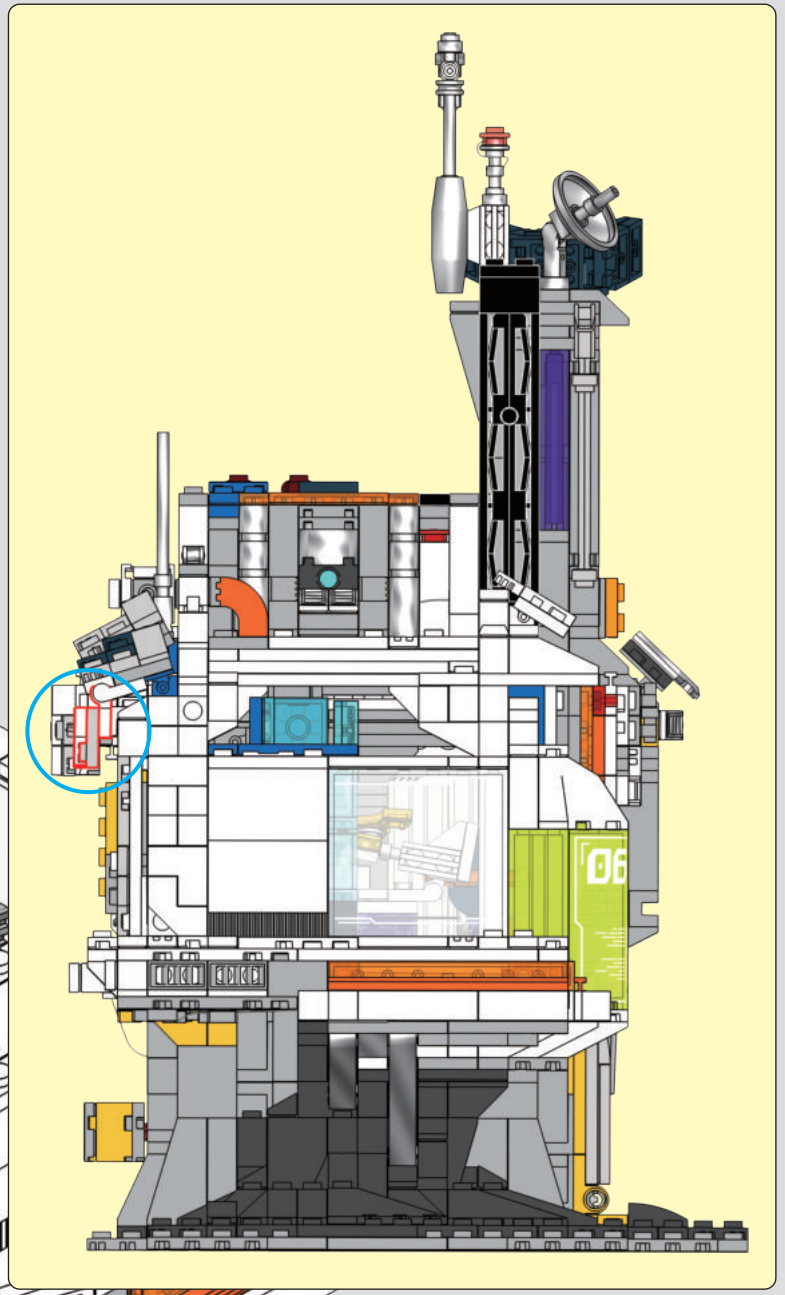


12


F

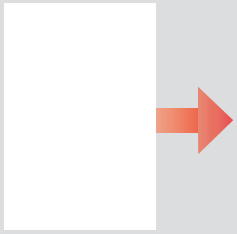

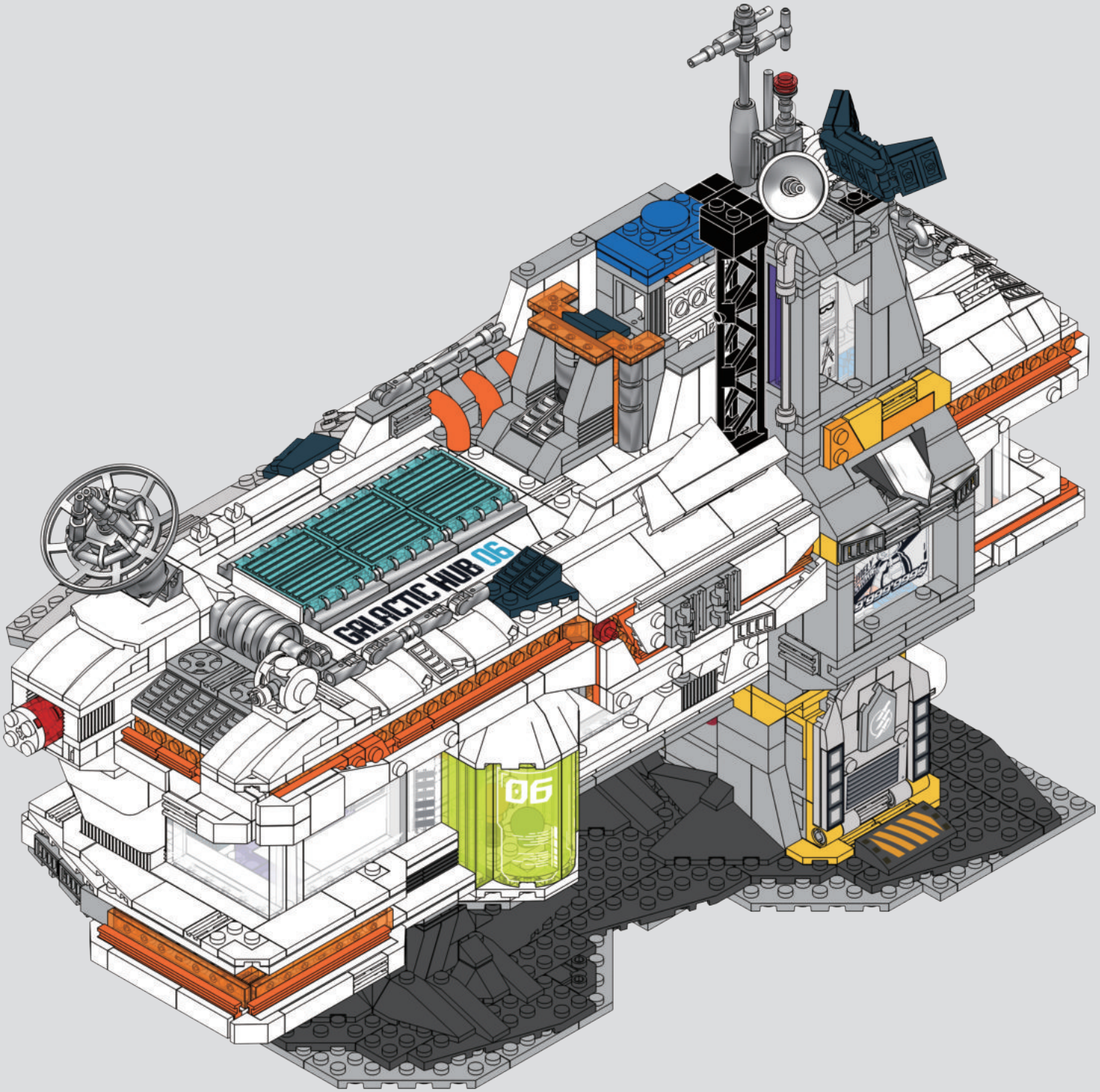
GALACTIC HUB 06
06

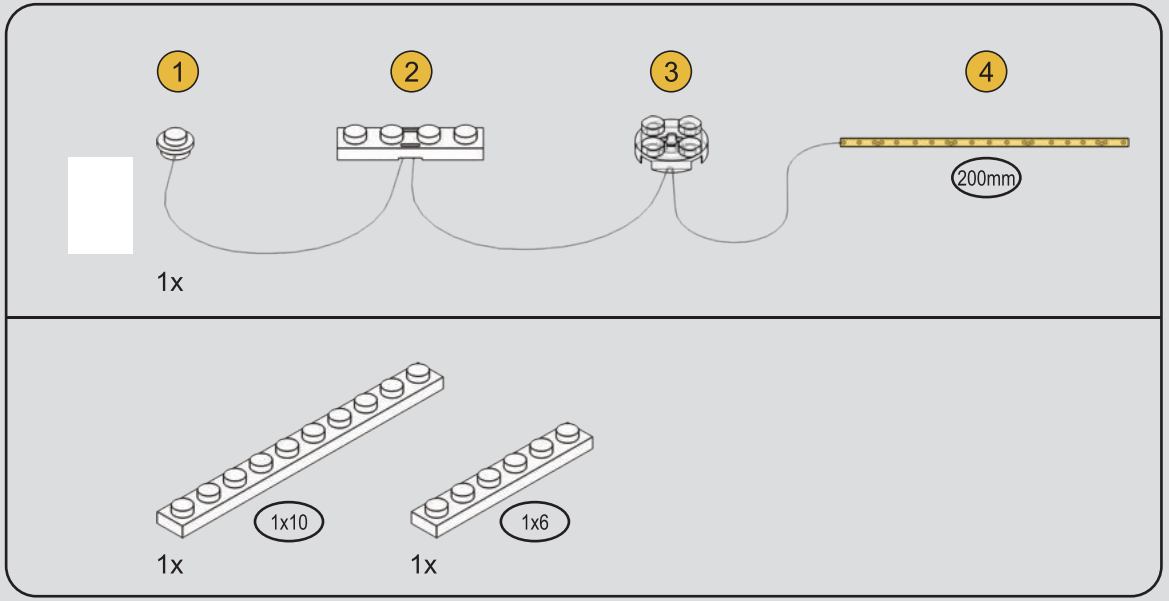

226

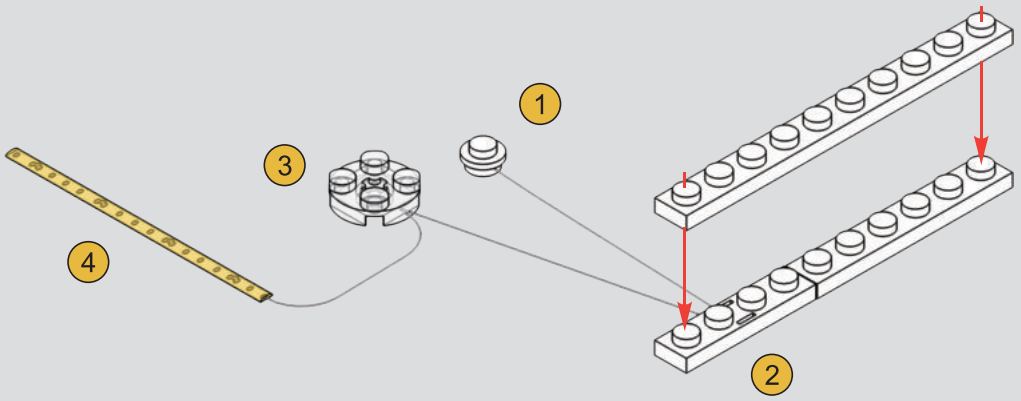

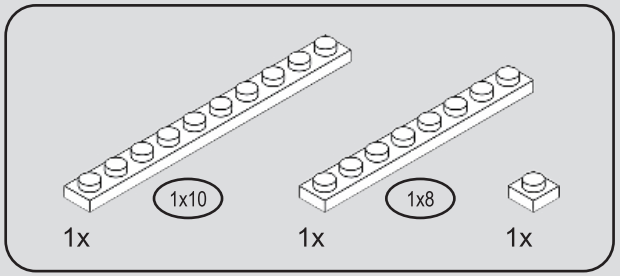

227

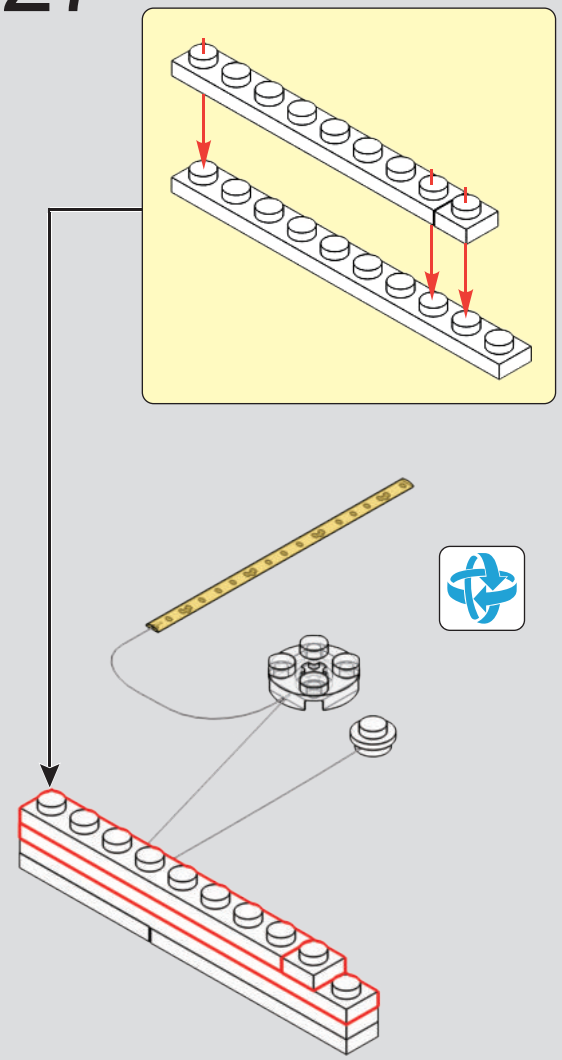

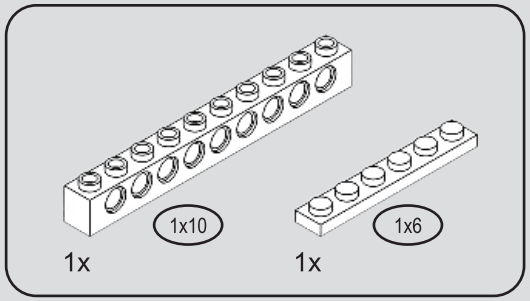

228

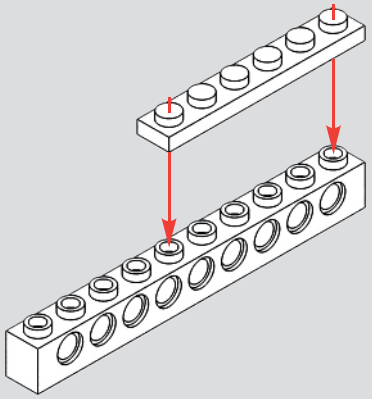

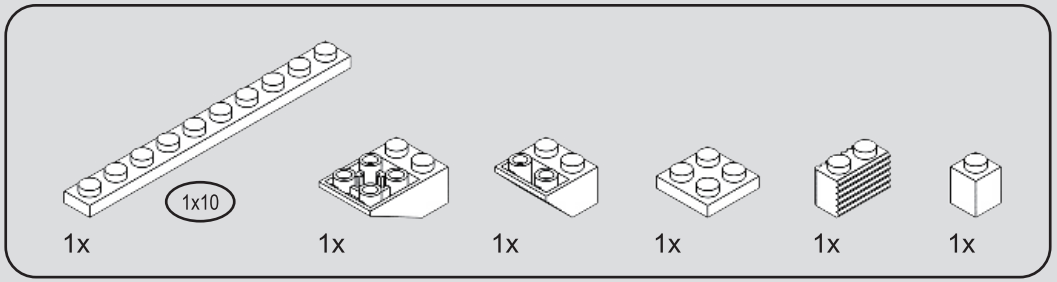

229

1

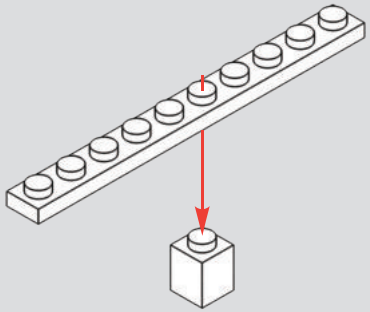

2

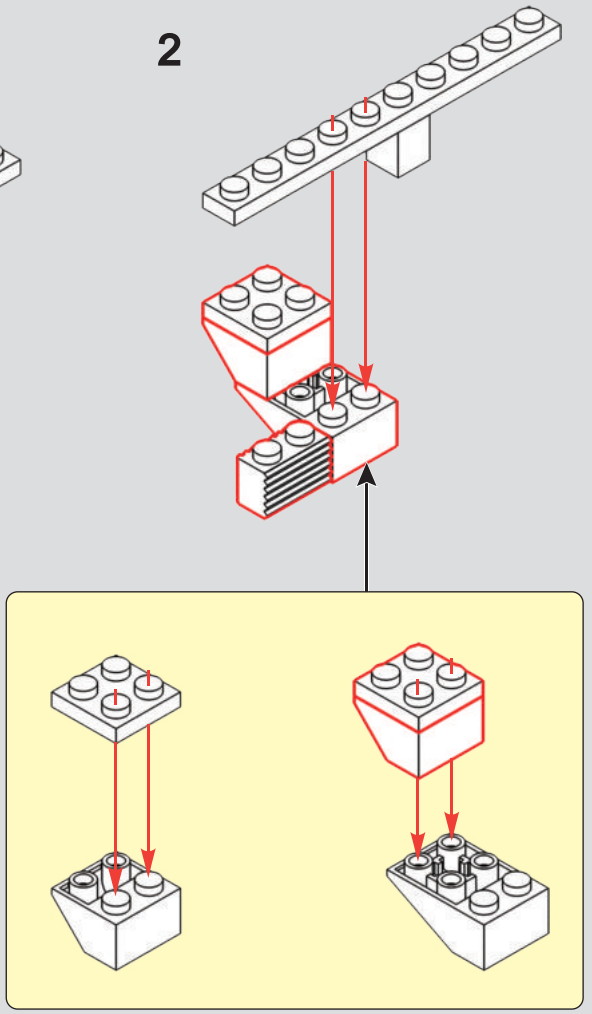

230

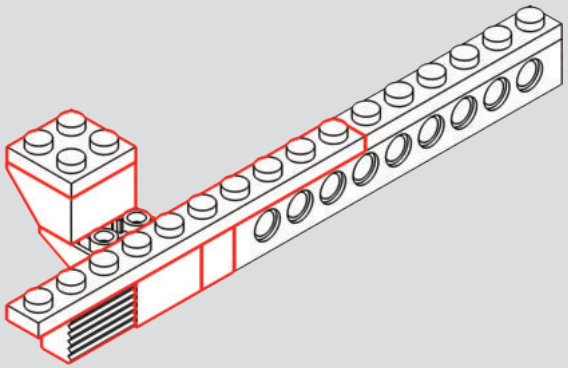

231

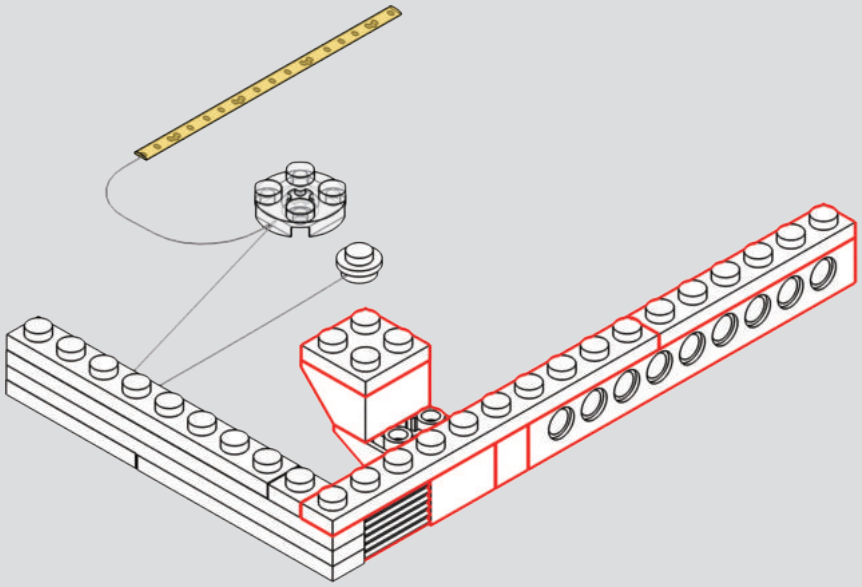

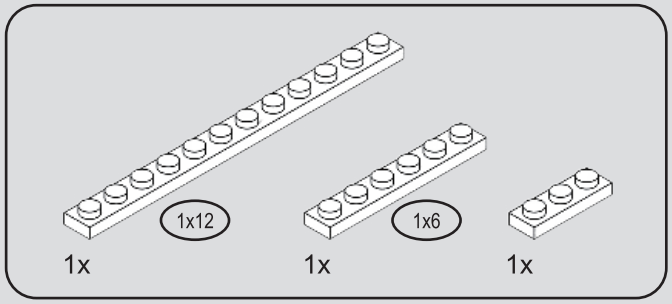

232

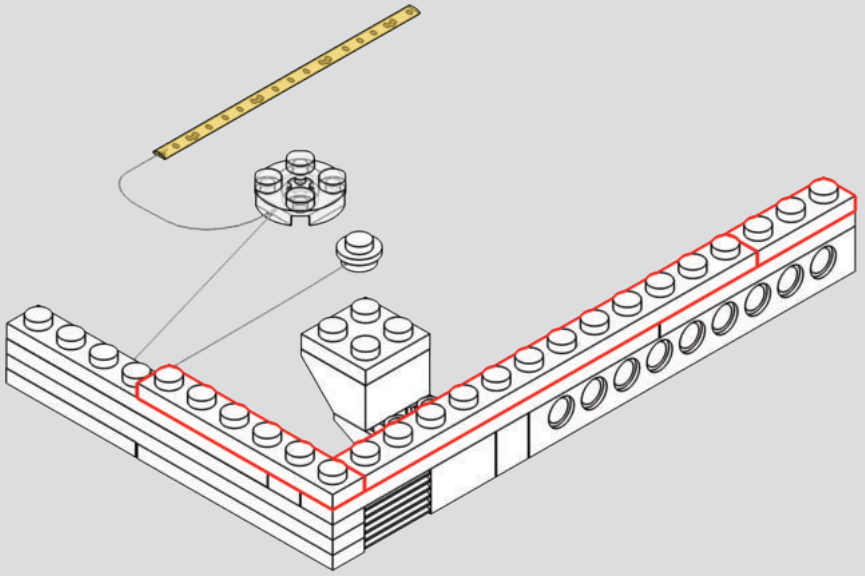



233

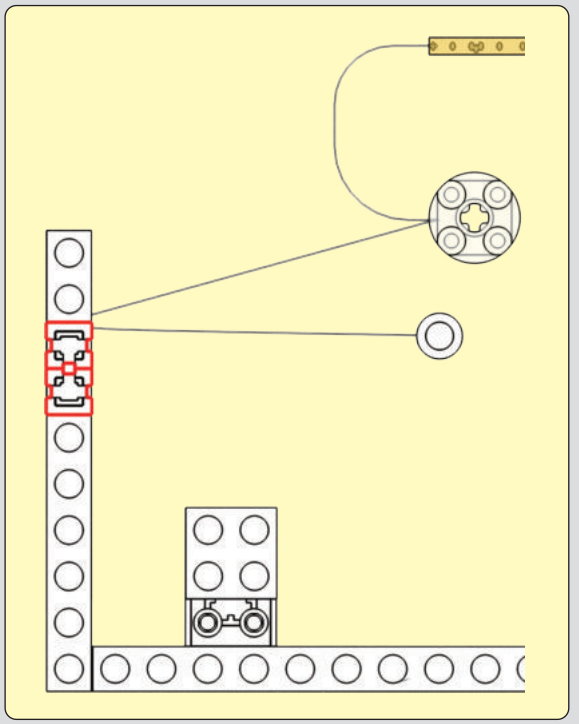

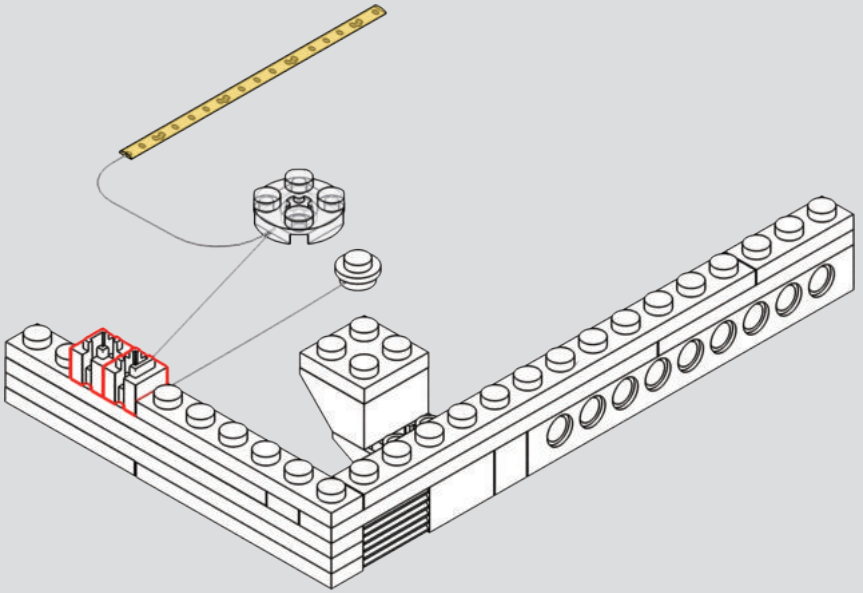

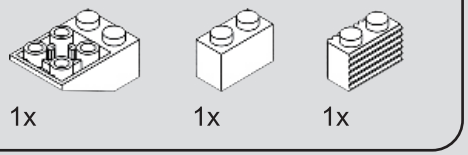

234

1

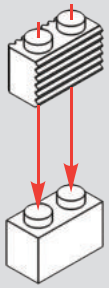

2

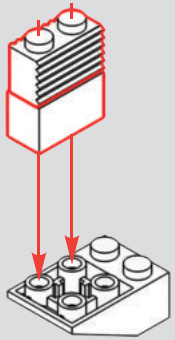

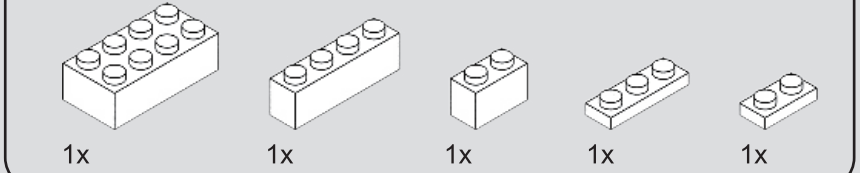

235

1

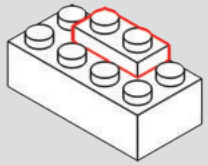

2

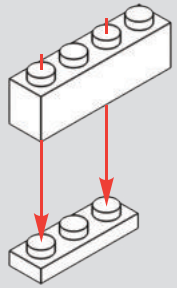

3

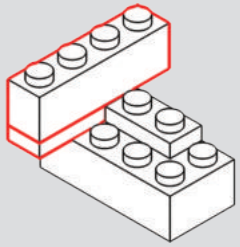

4

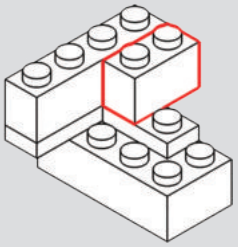

236

1

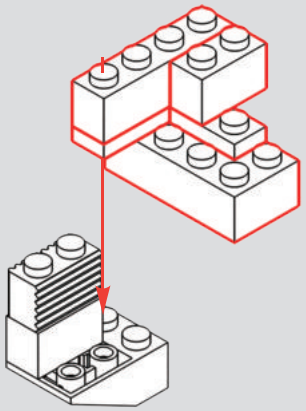

2

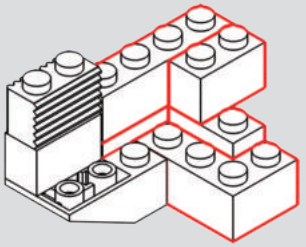

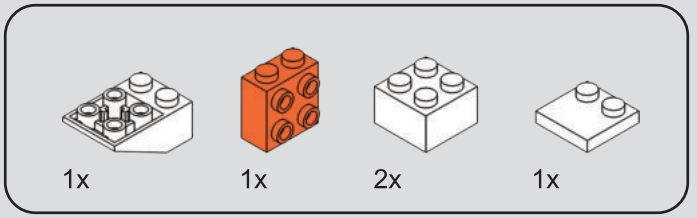

237

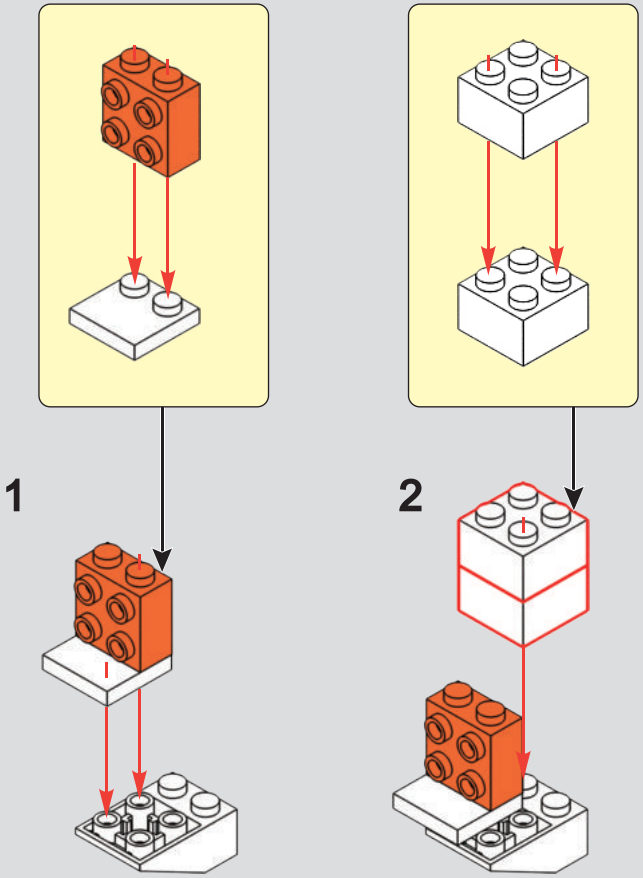

238

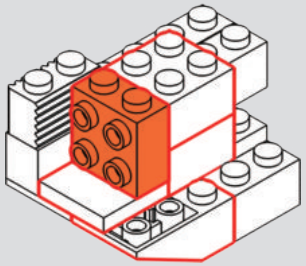



239

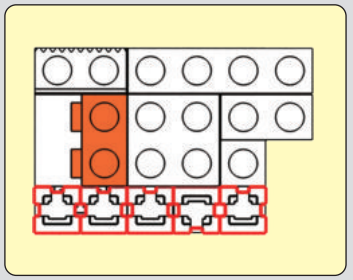

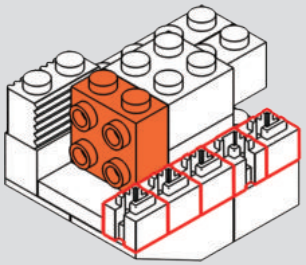

240

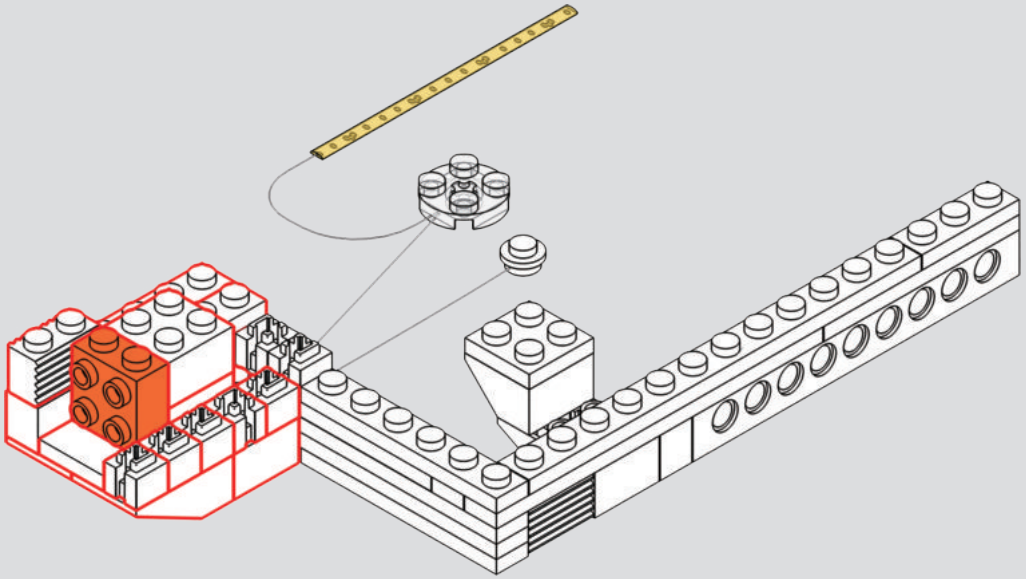

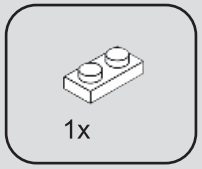

241

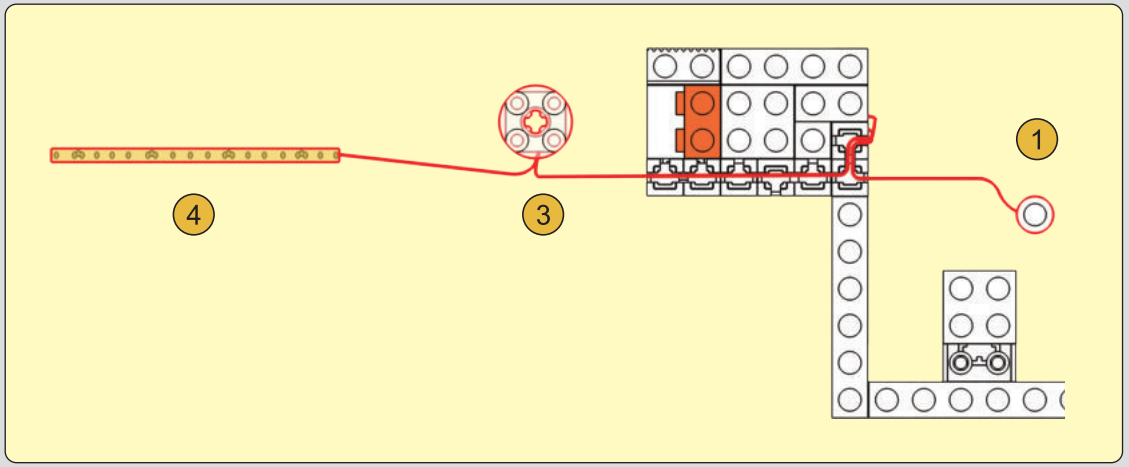

1

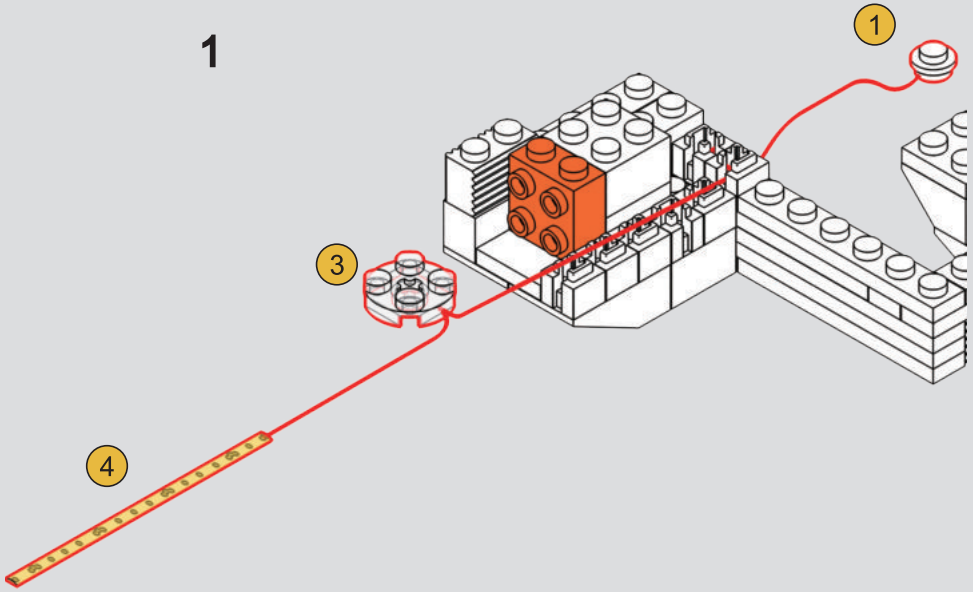

2

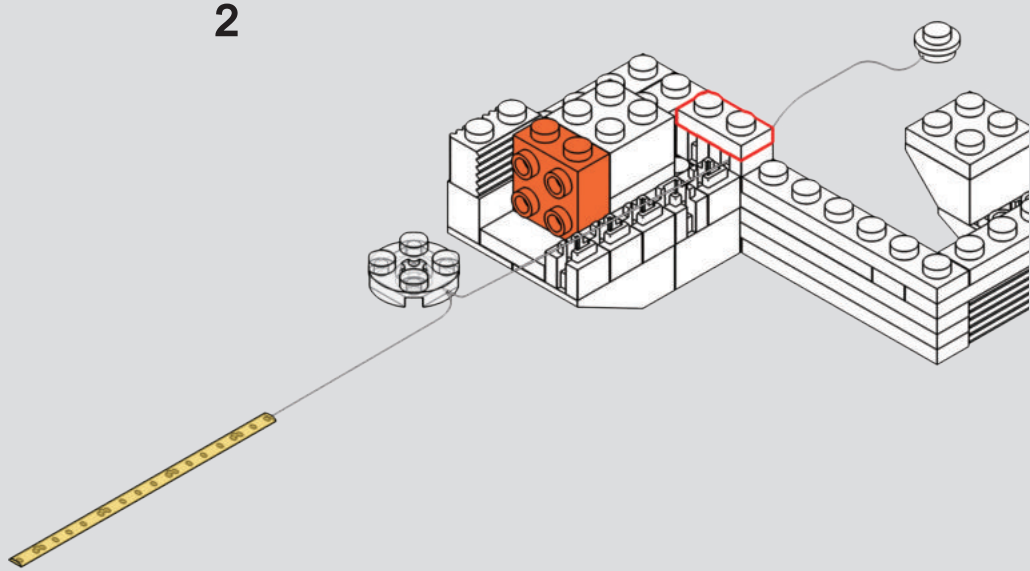

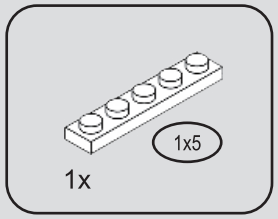

242

1

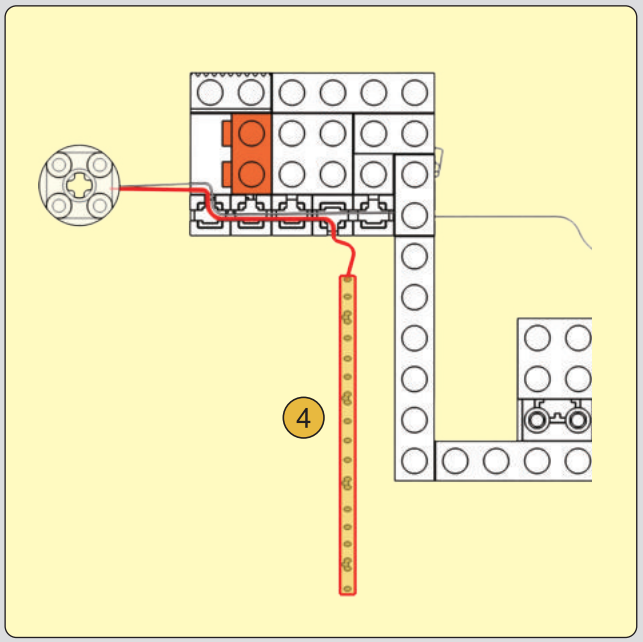

2

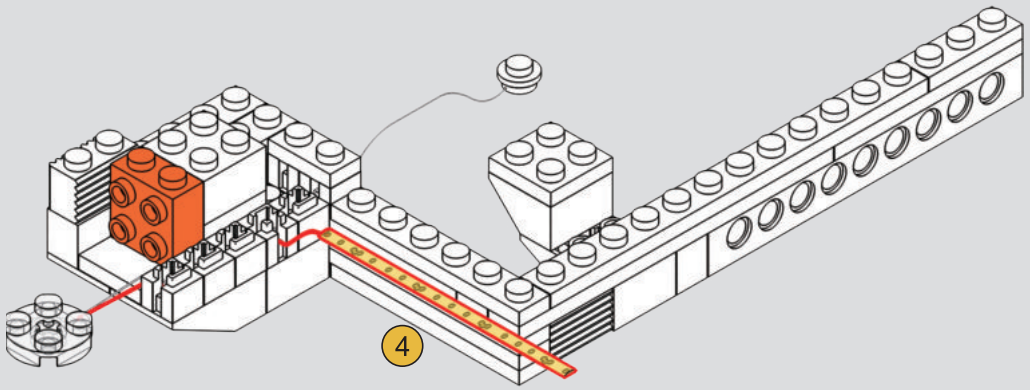

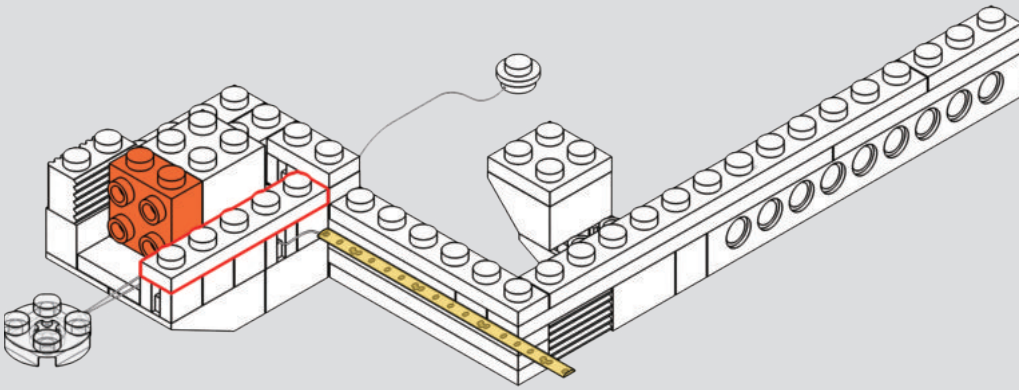

243

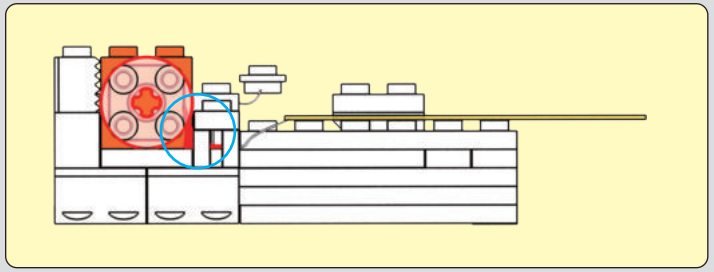

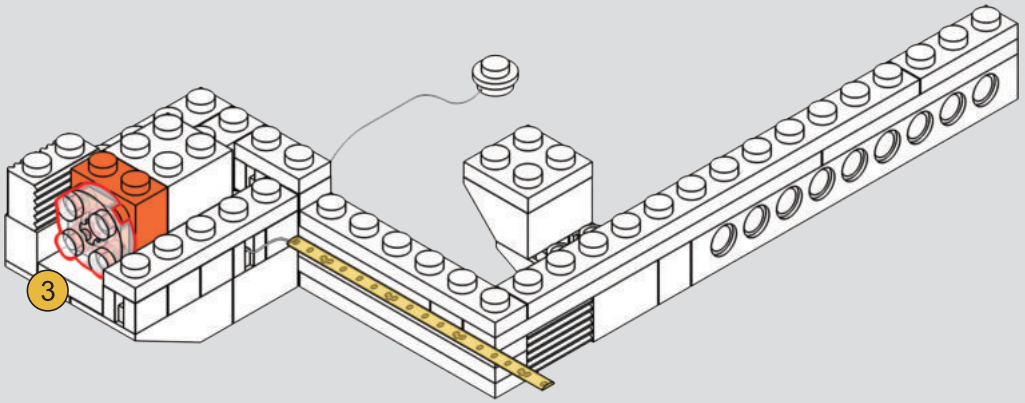

244

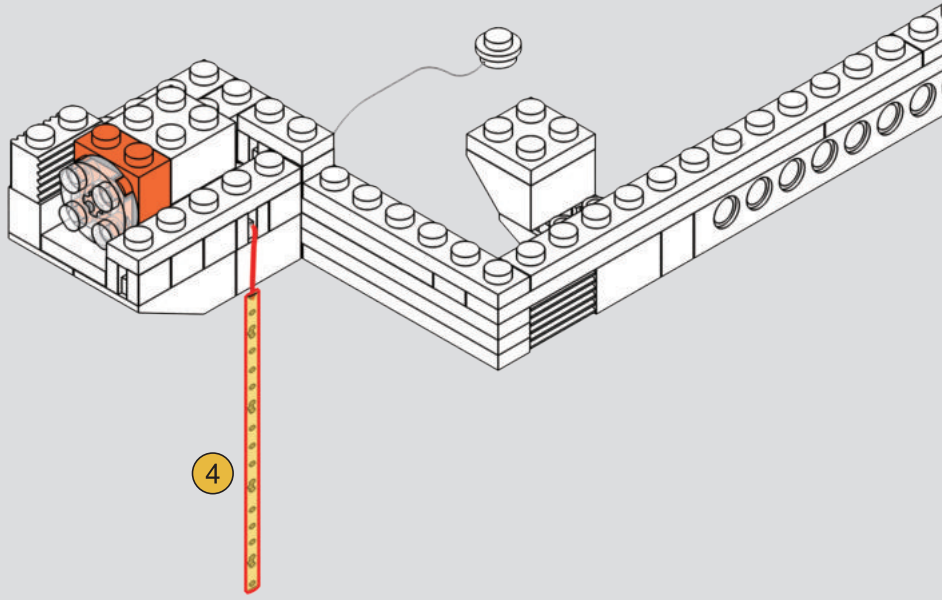

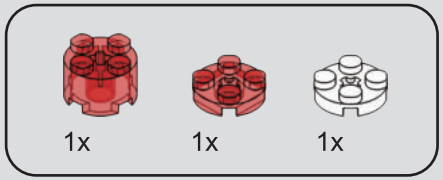

245

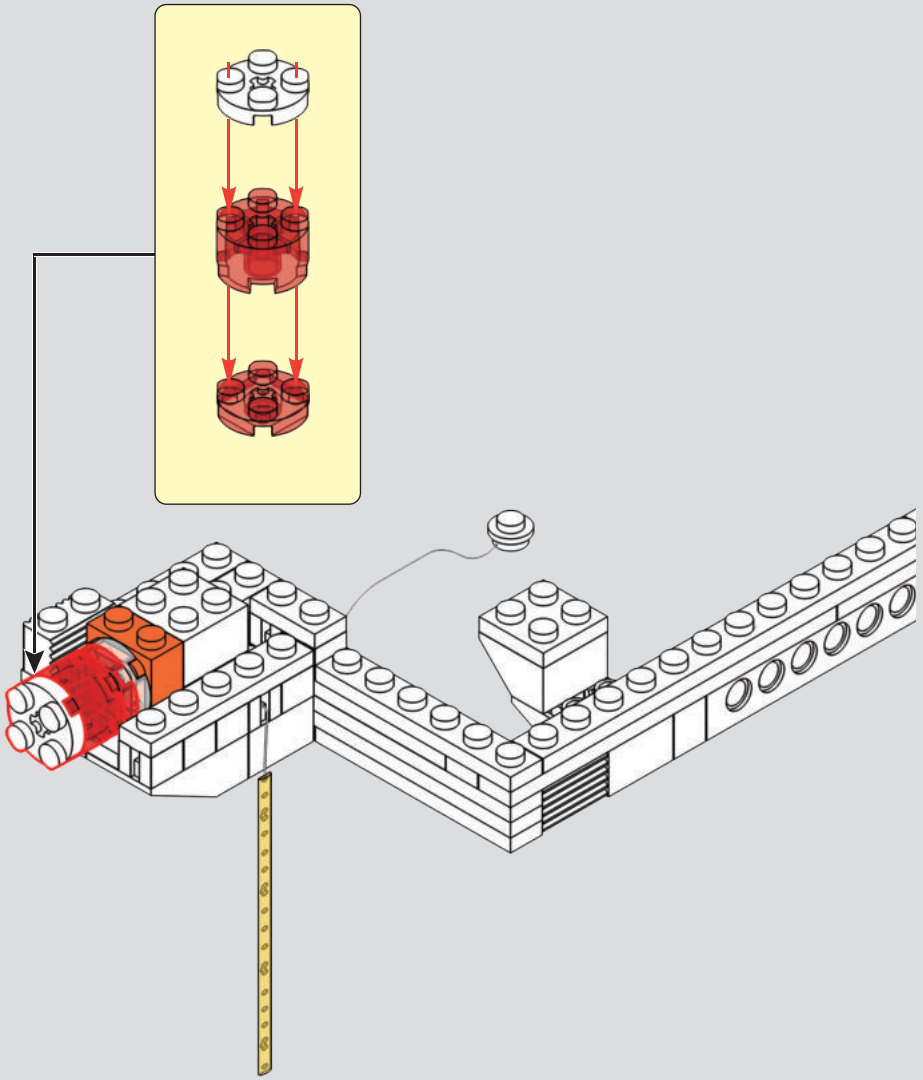

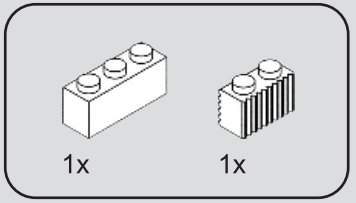

246

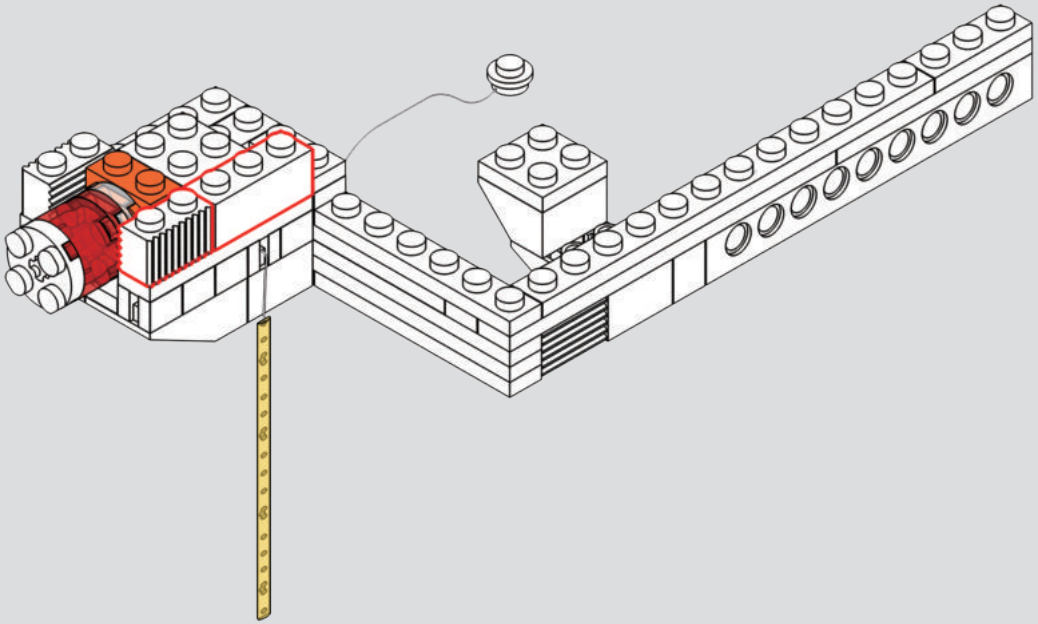

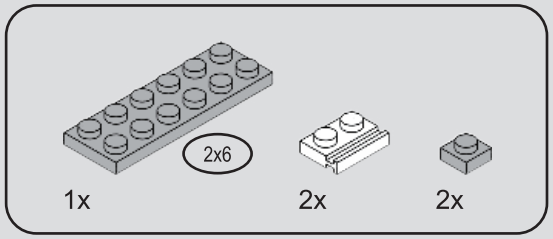

247

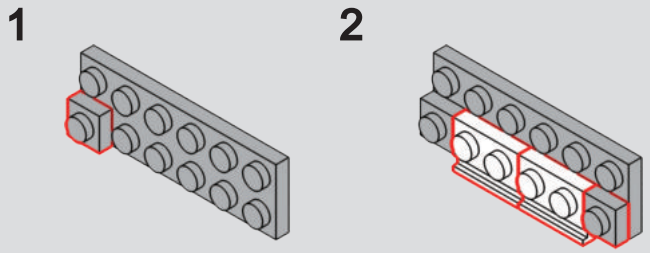

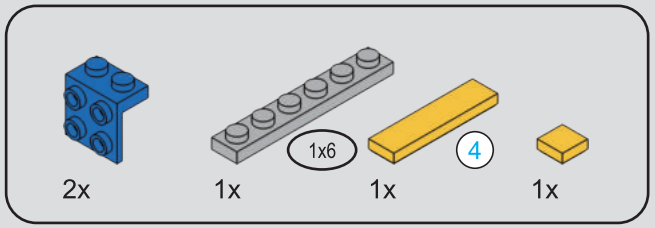

248

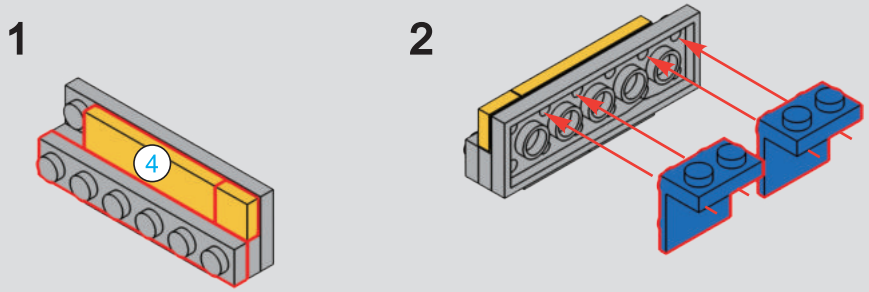



249

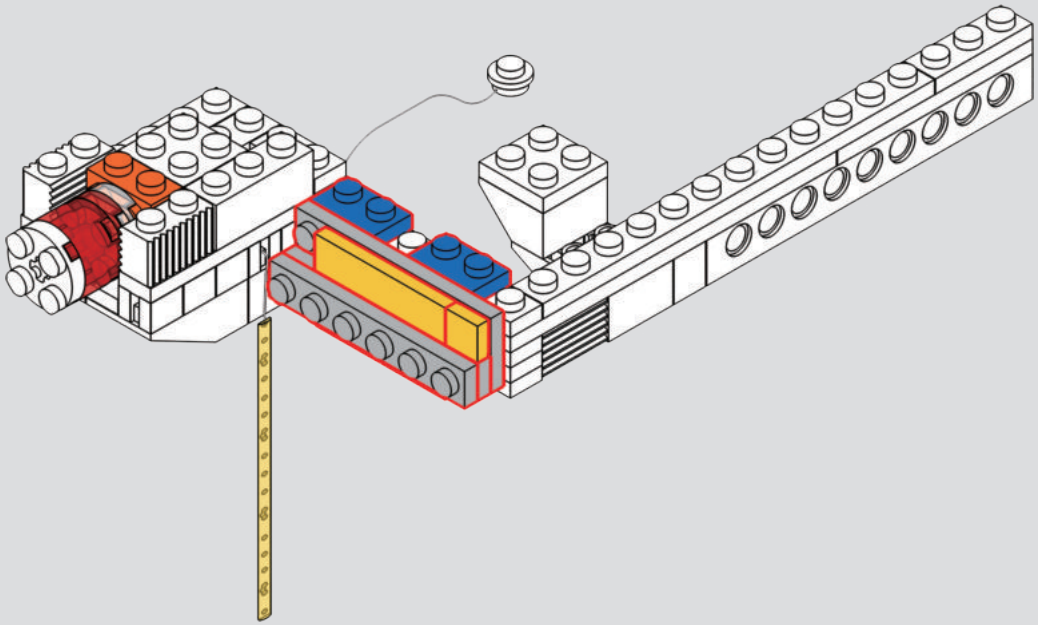

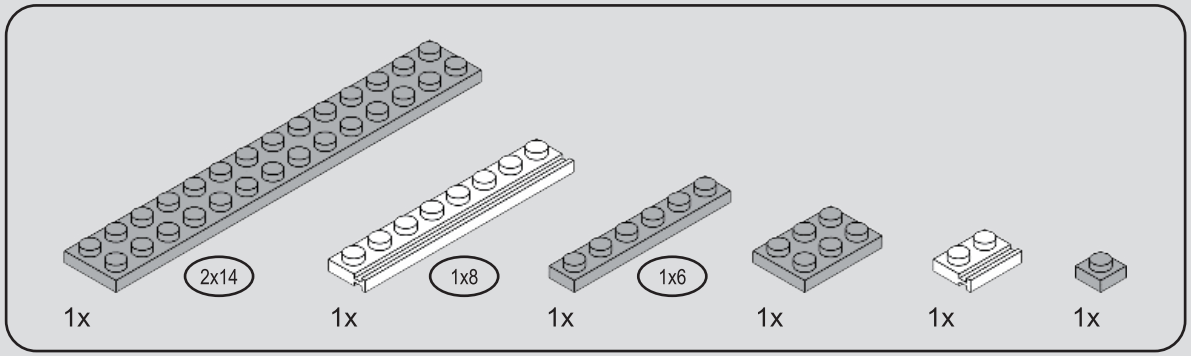

250

1

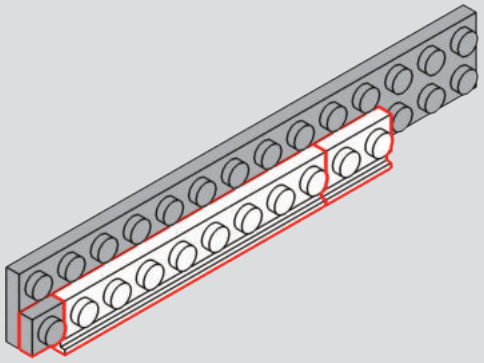

2

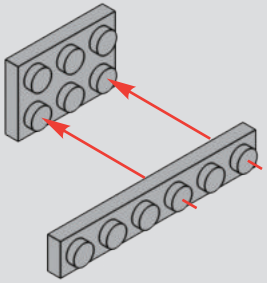

3

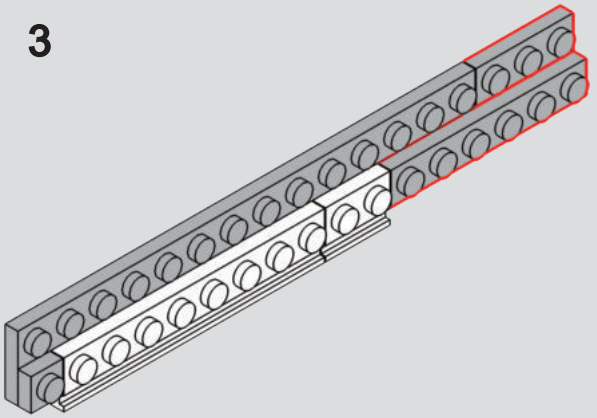

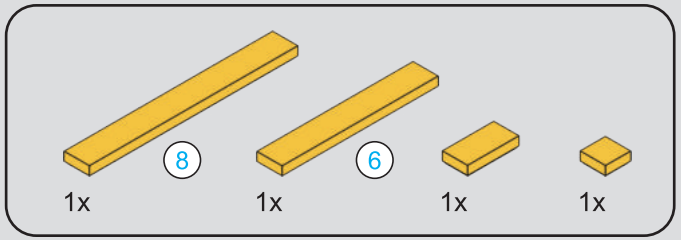

251

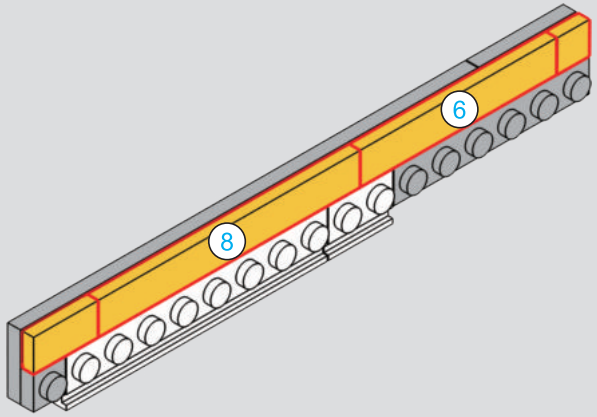

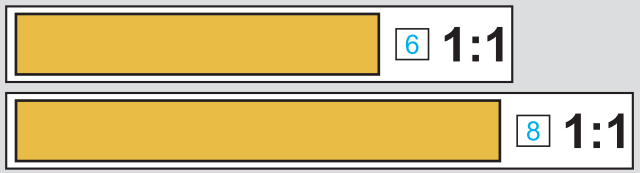

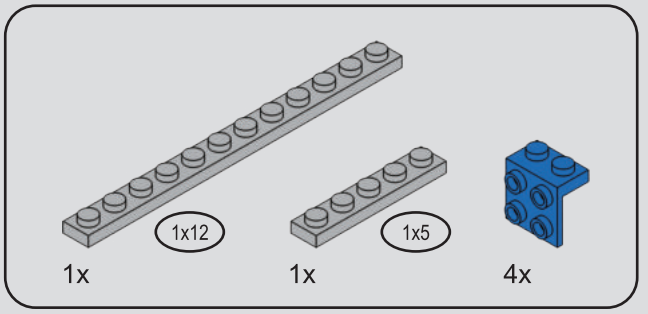

252

1

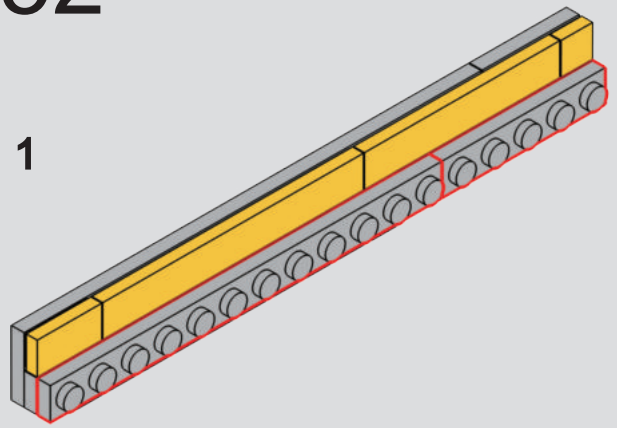

2

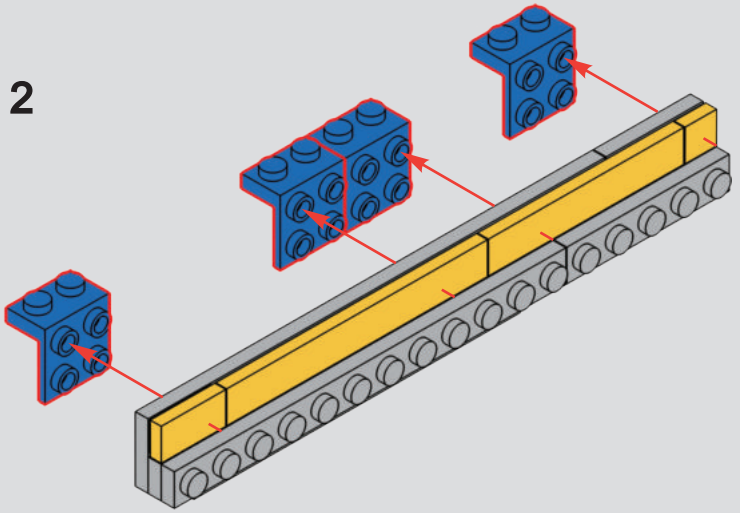

253

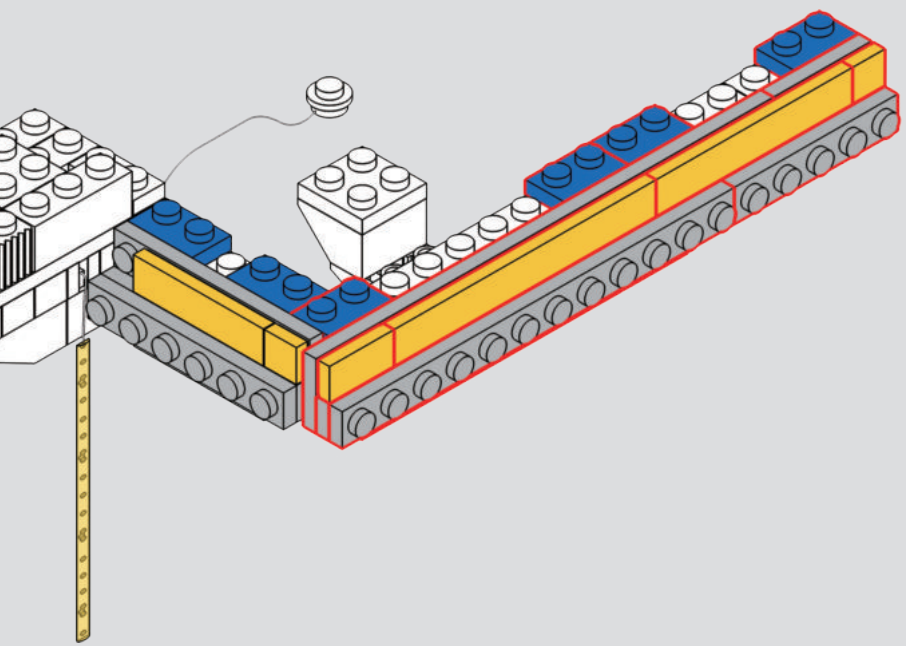

254

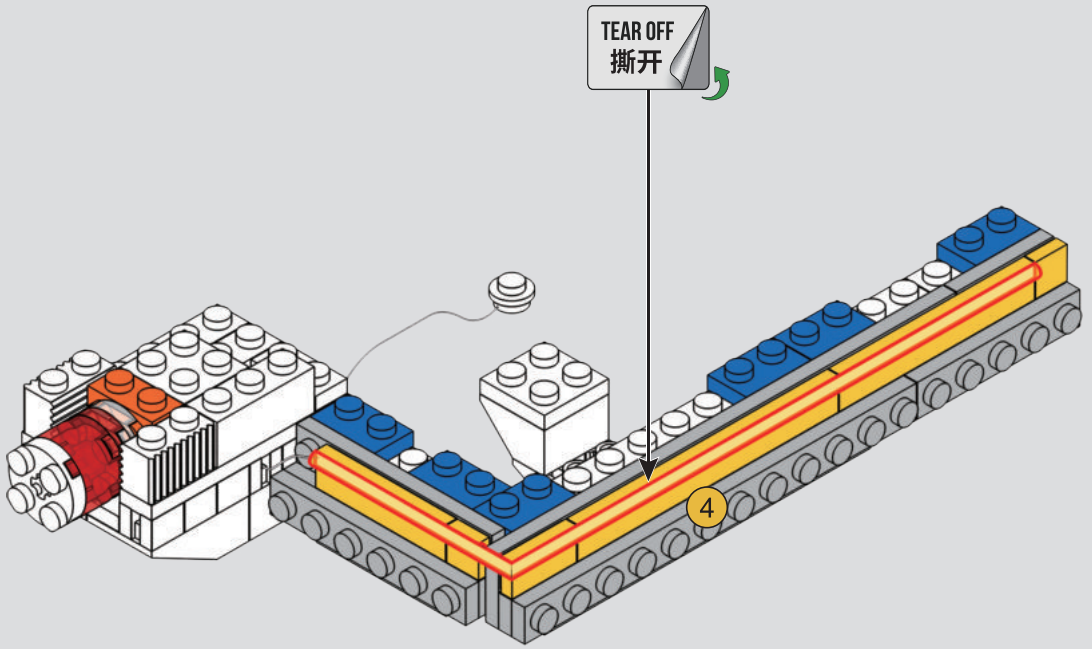

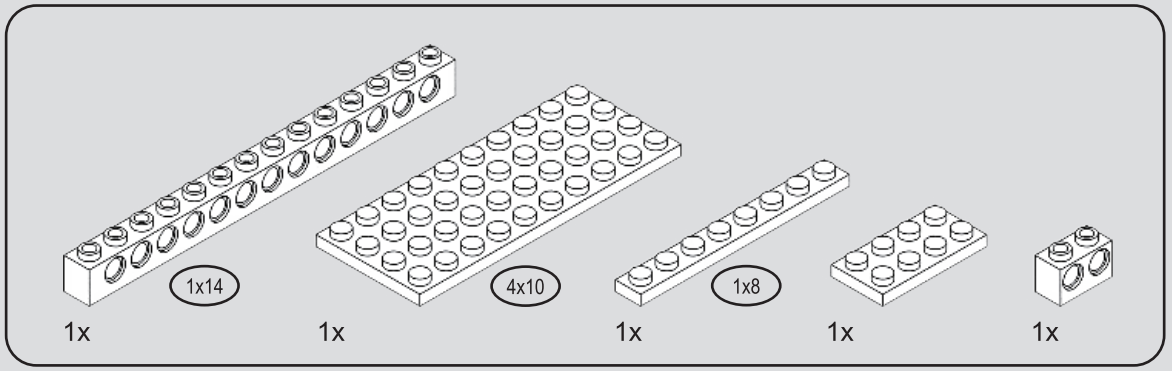

255

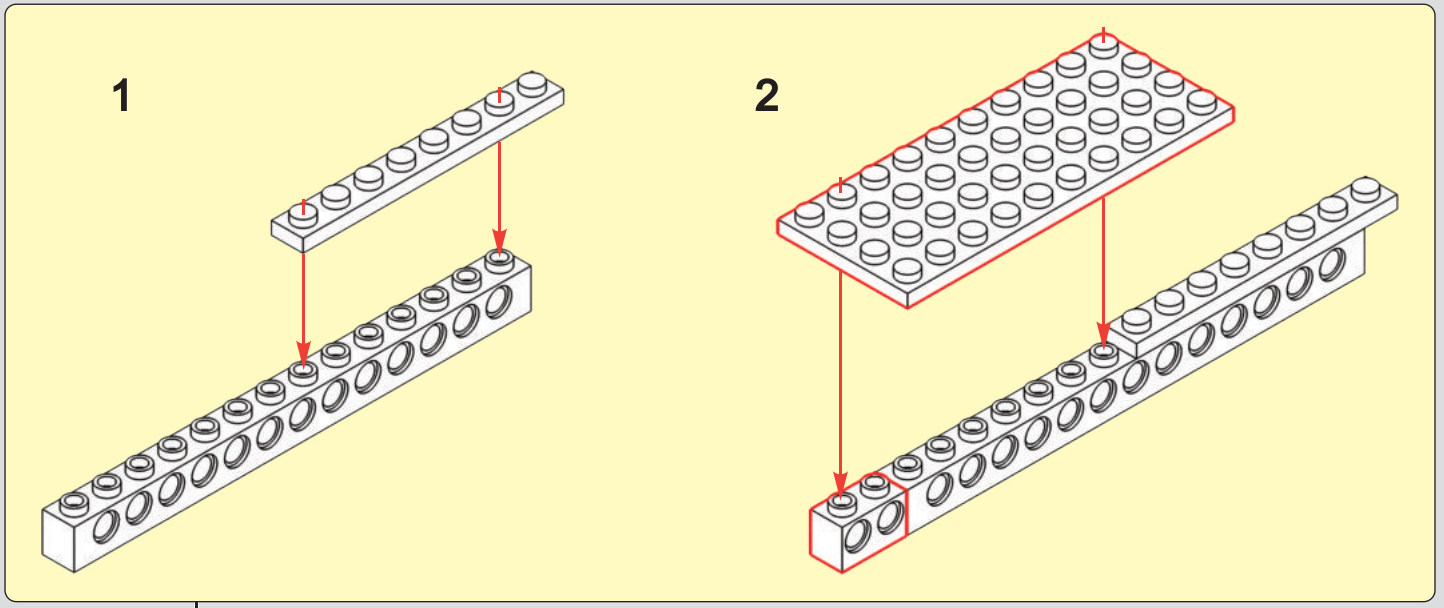

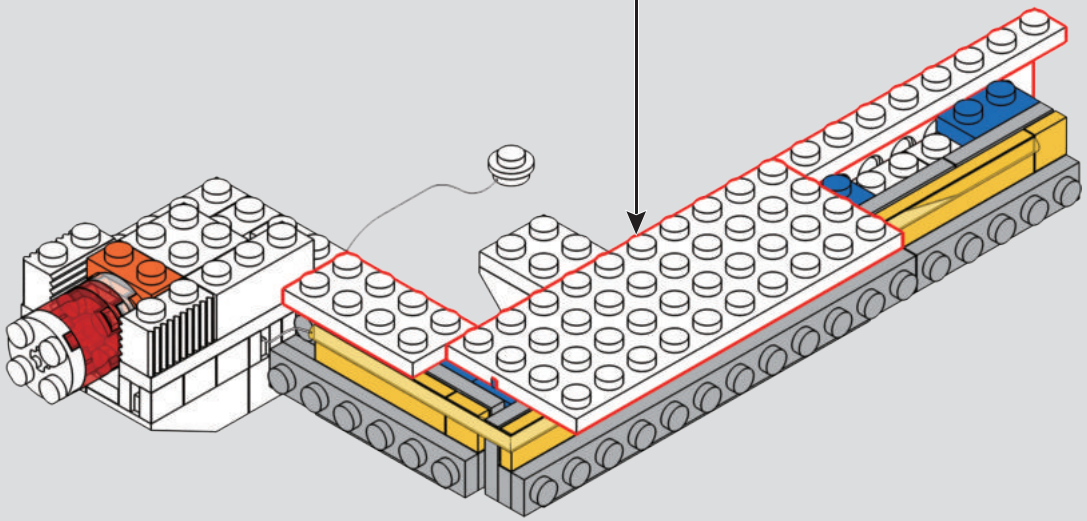

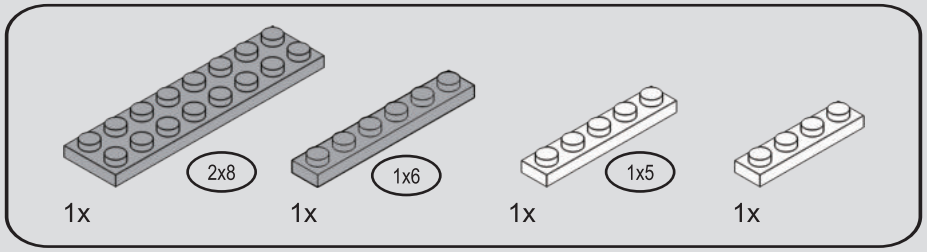

256

1

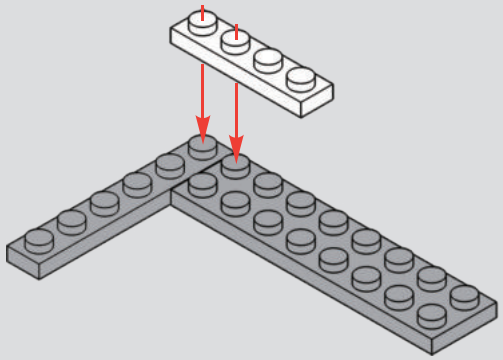

2

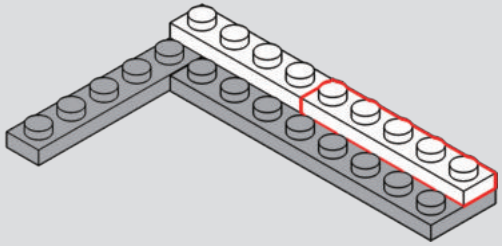

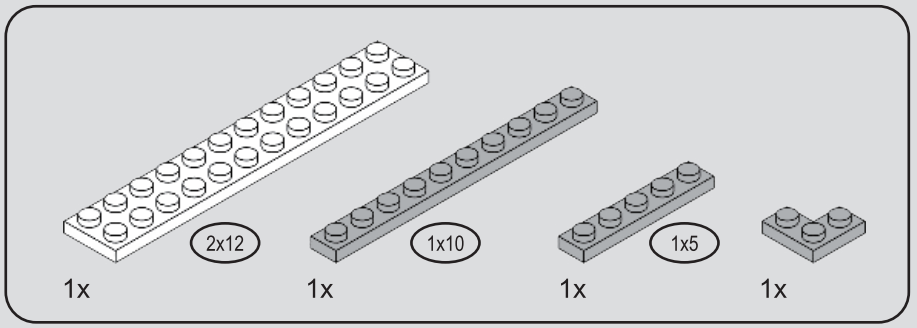

257

1

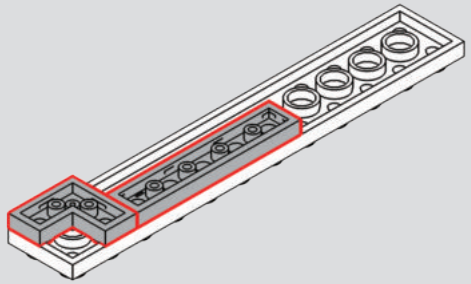

2

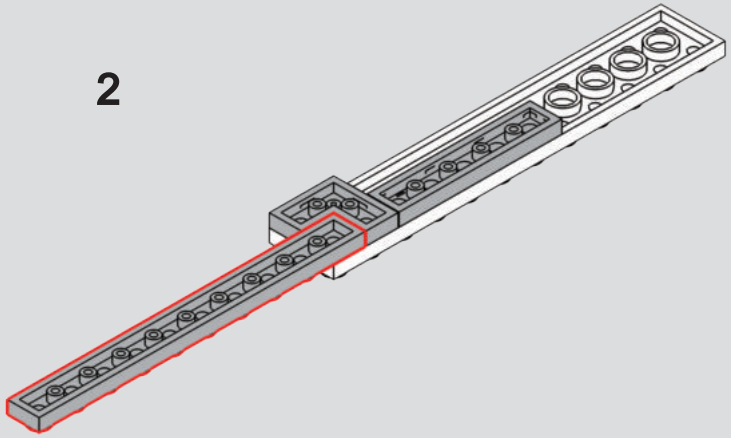

258

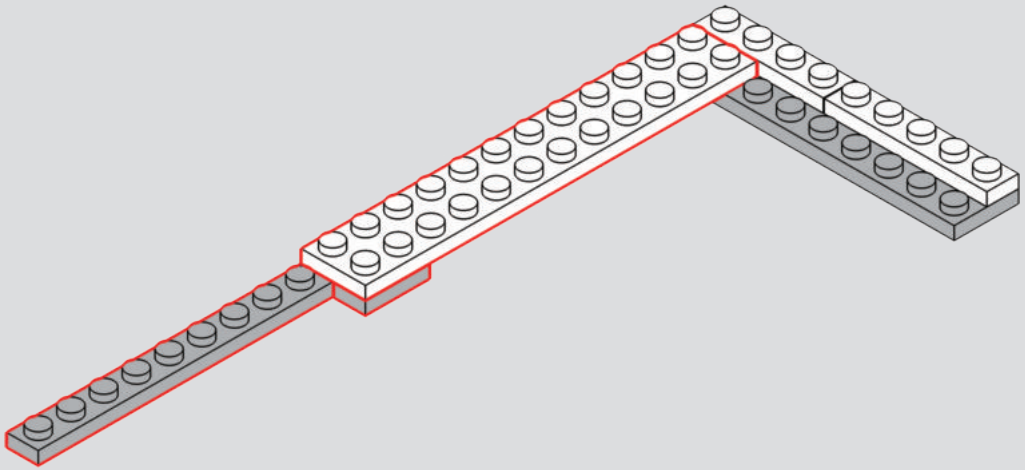

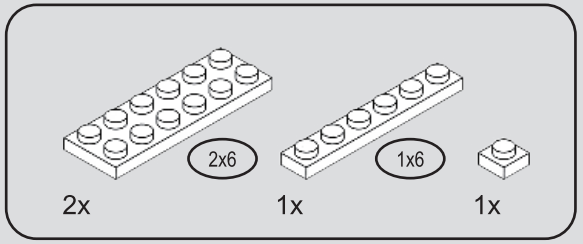

259

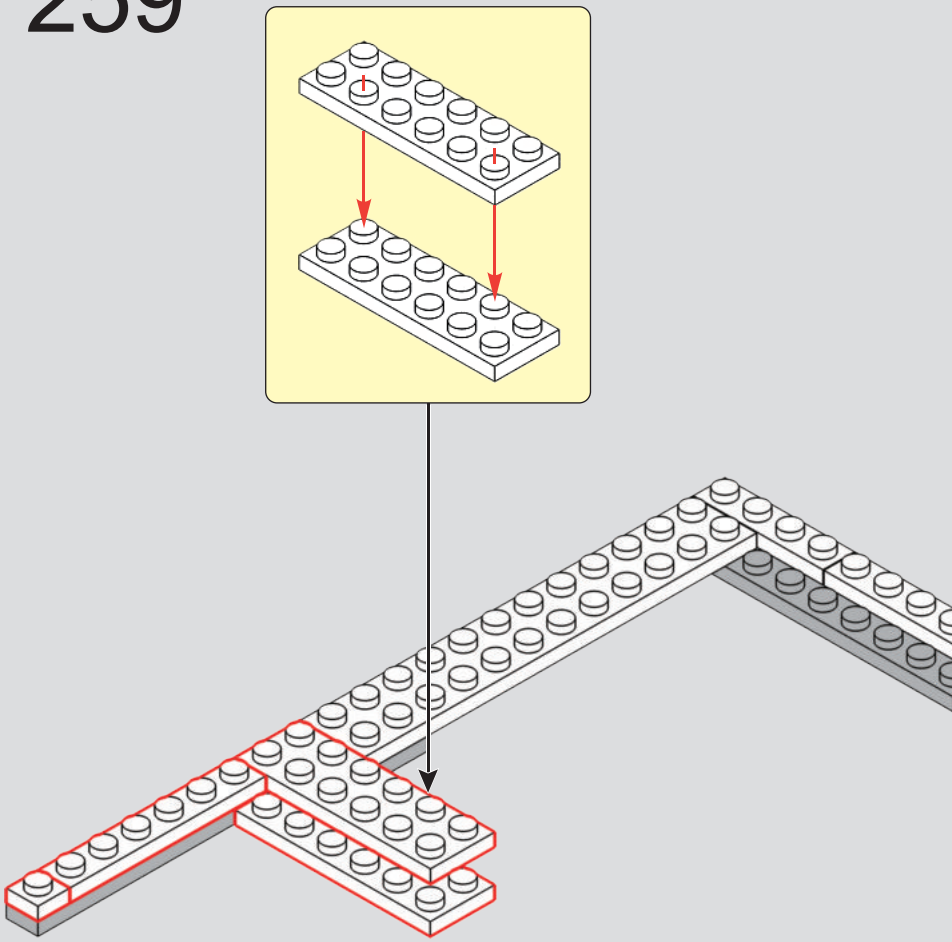

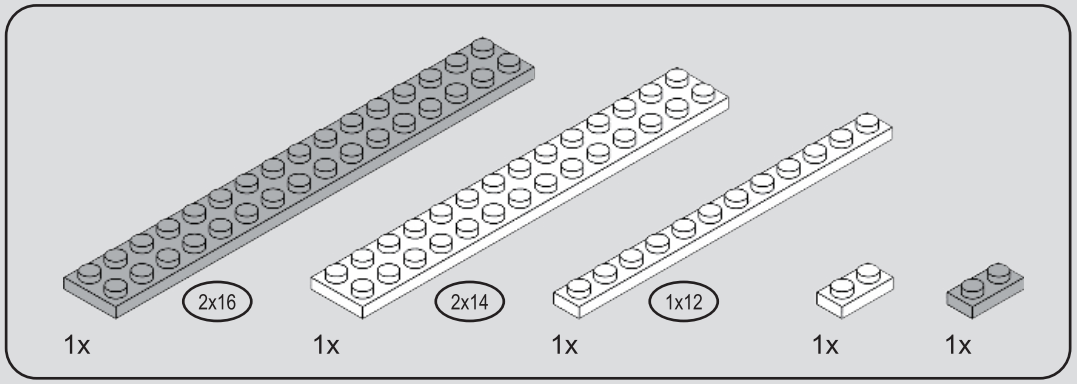

260

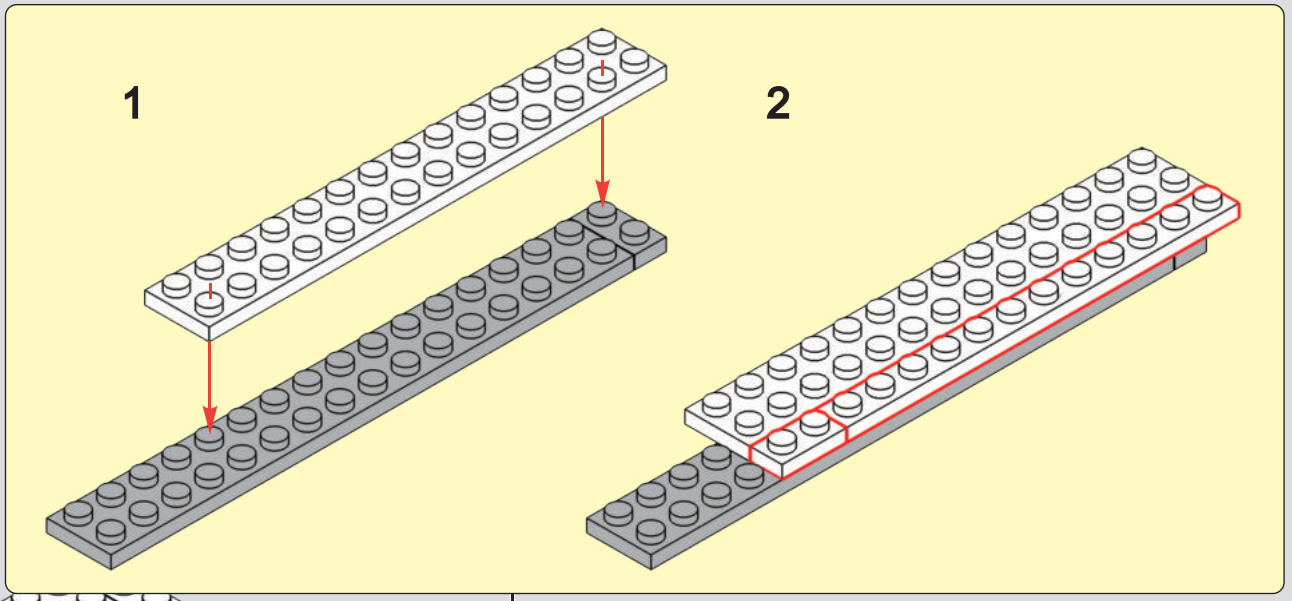

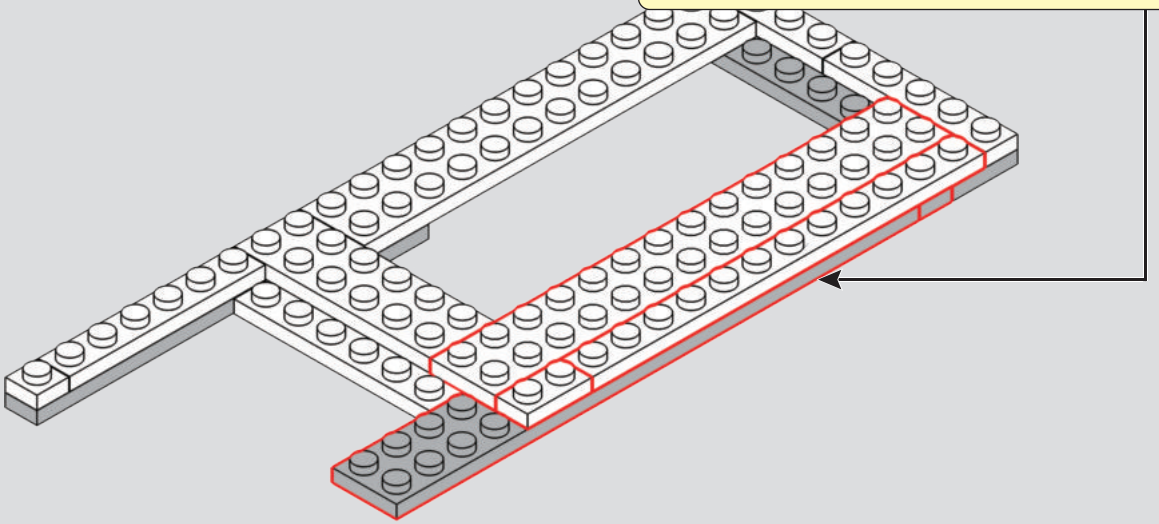

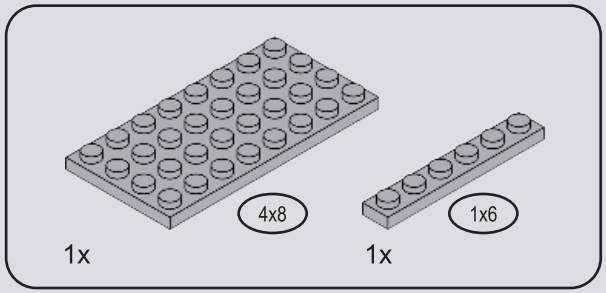

261

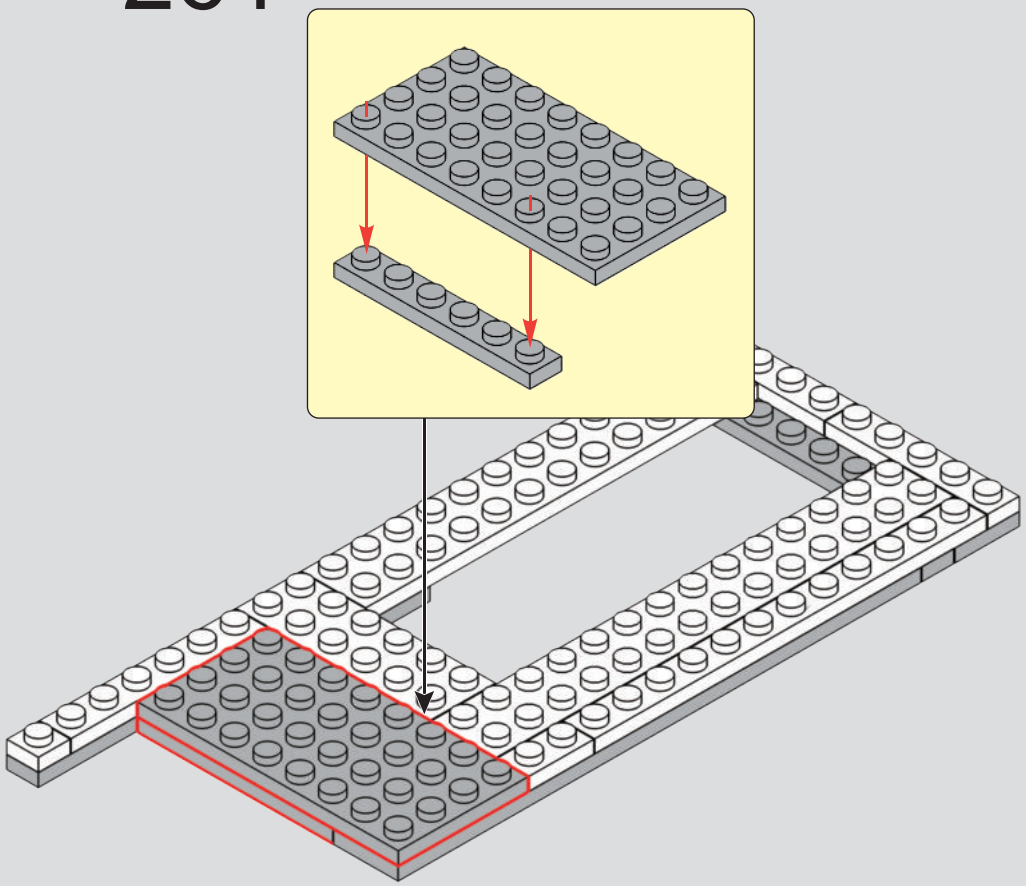

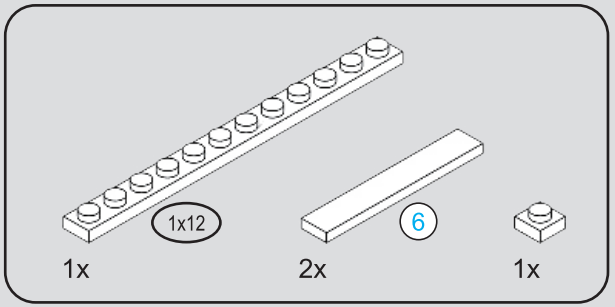

262

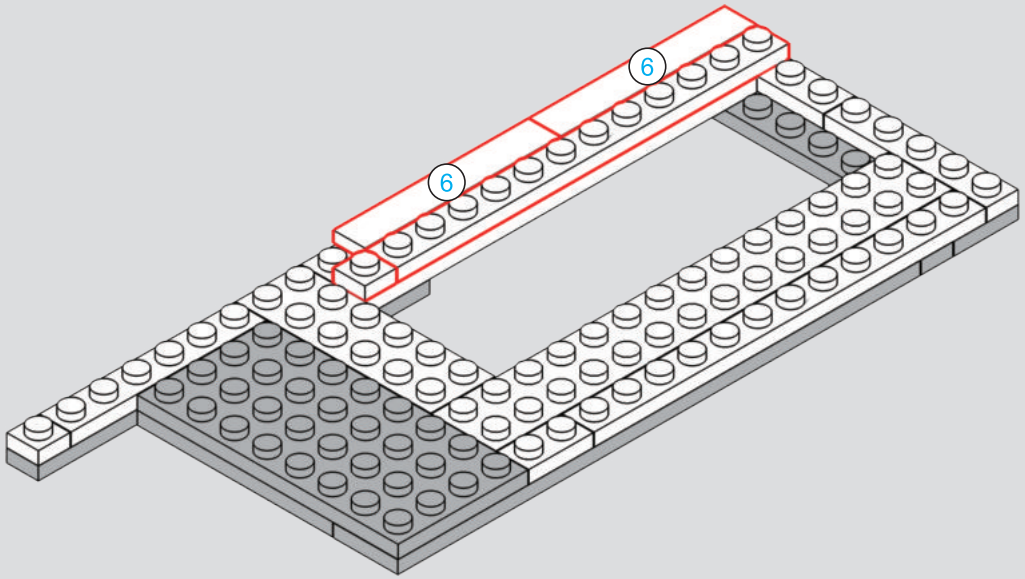

6 1:1

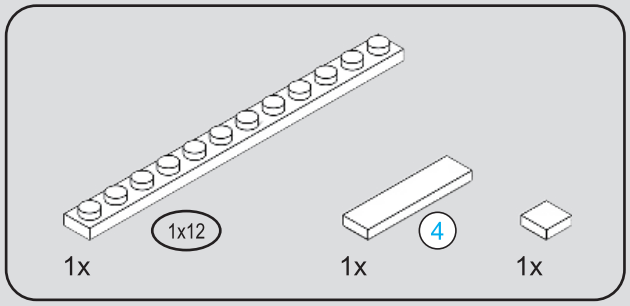

263

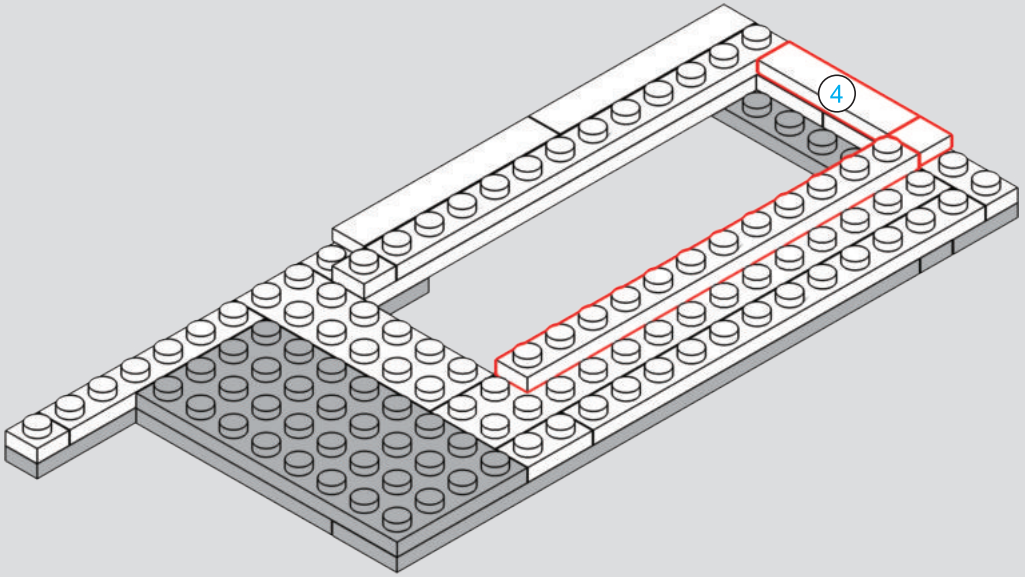

4 1:1

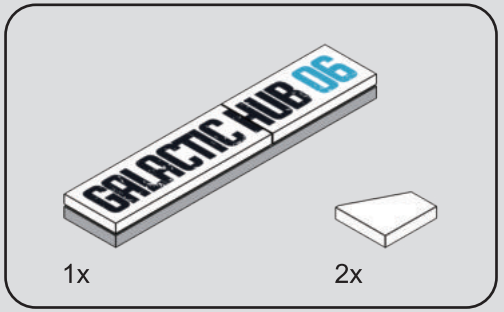

264

1

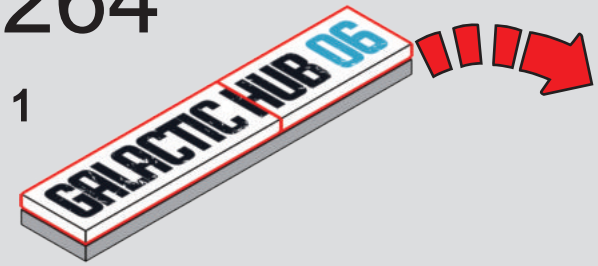

2

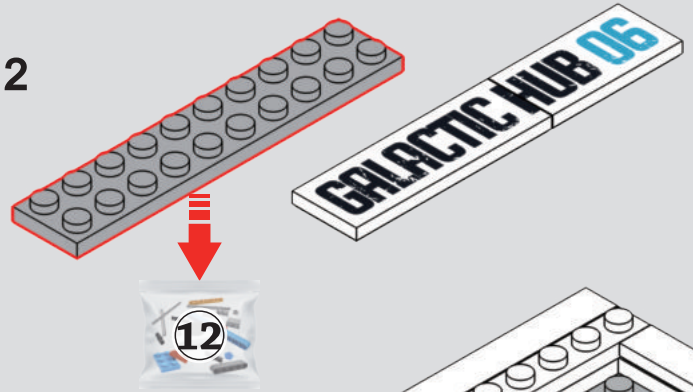

3

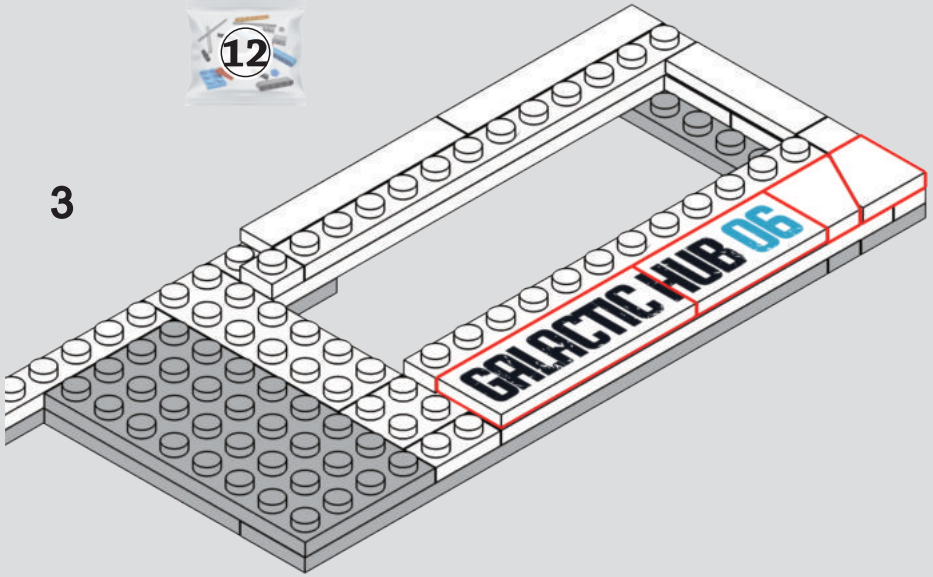

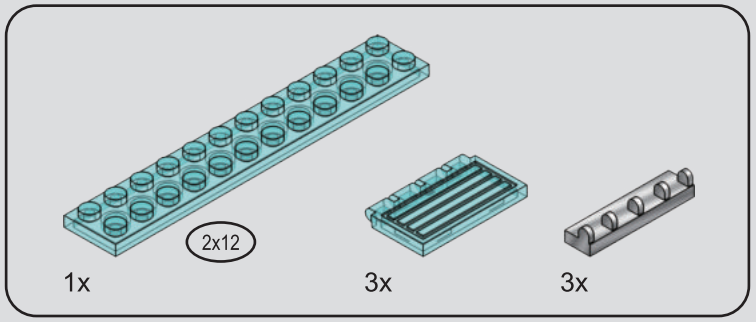

265

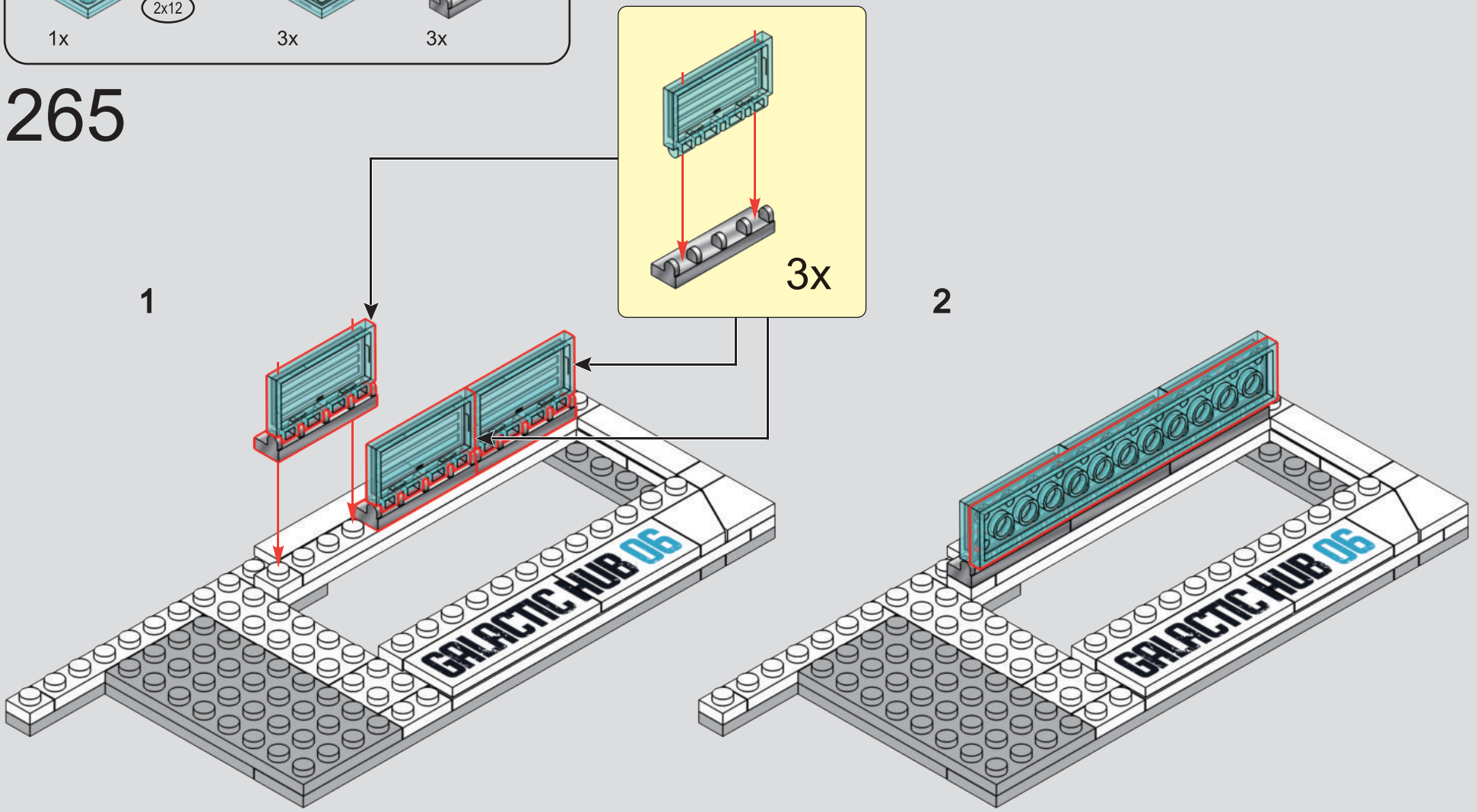

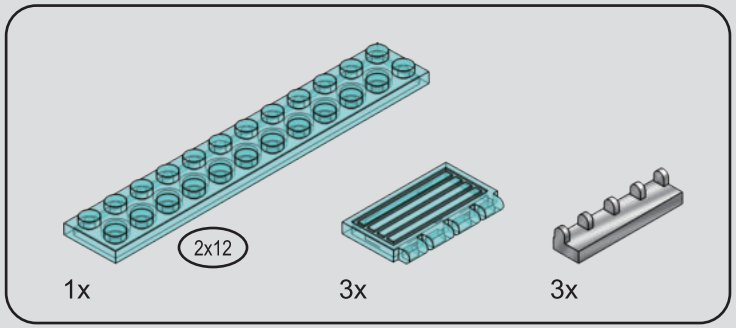

266

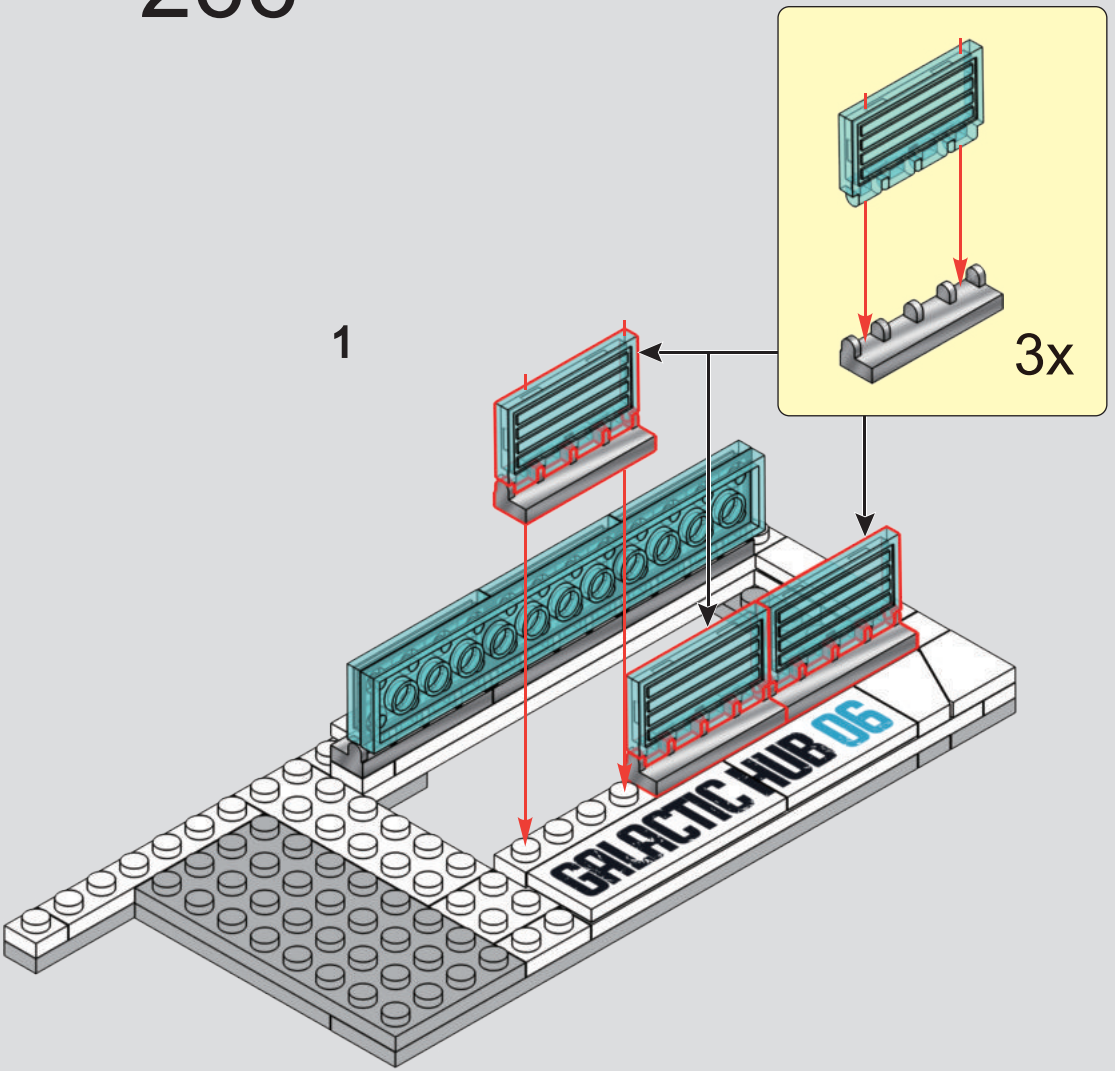

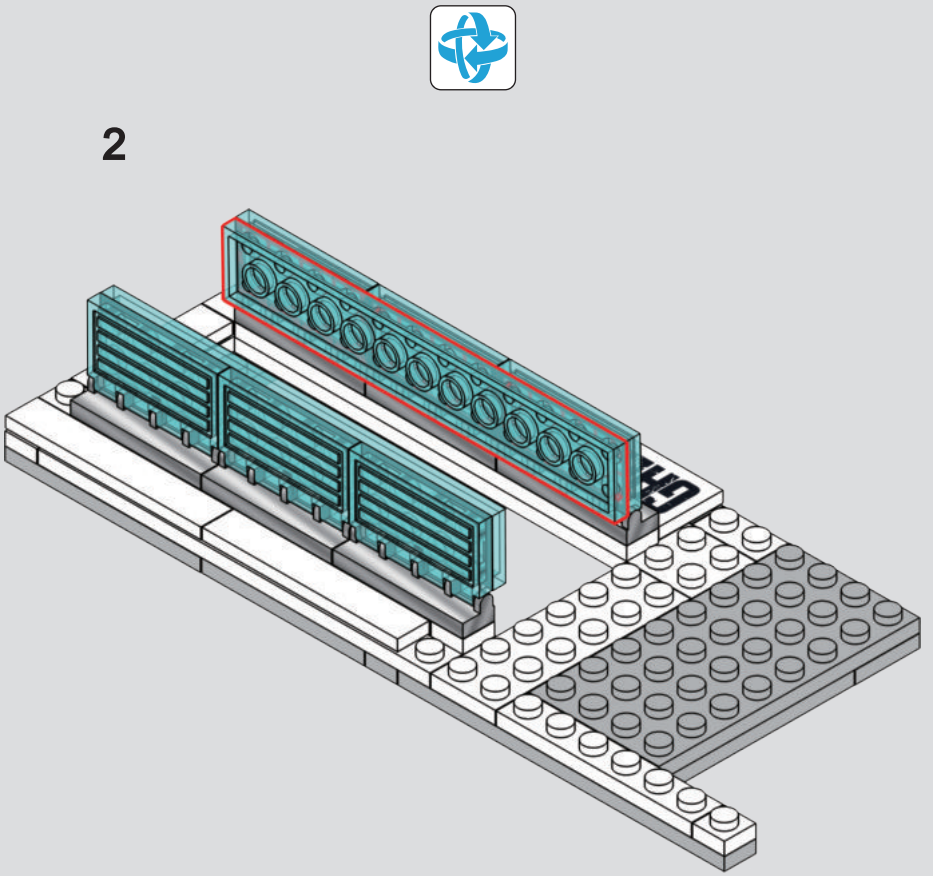

267

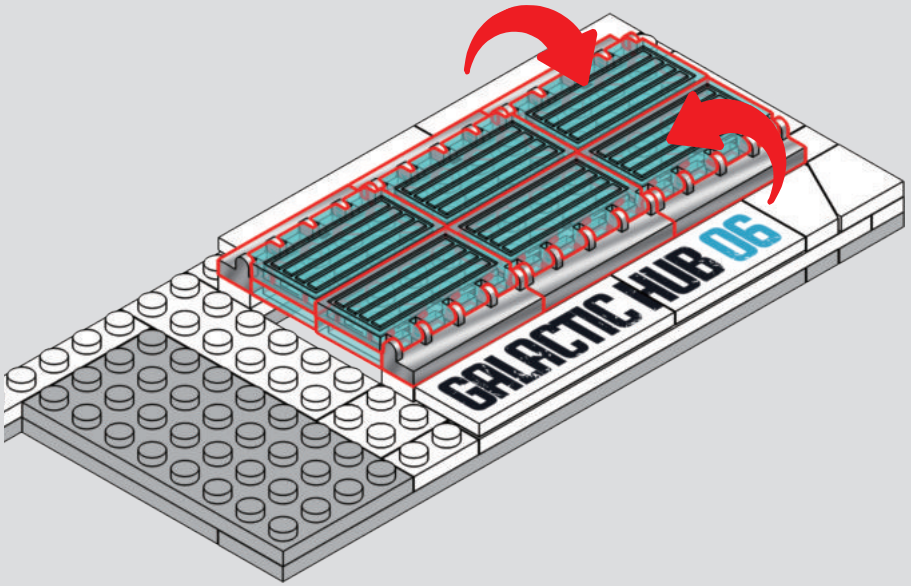

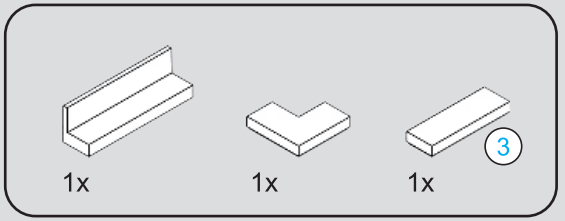

268

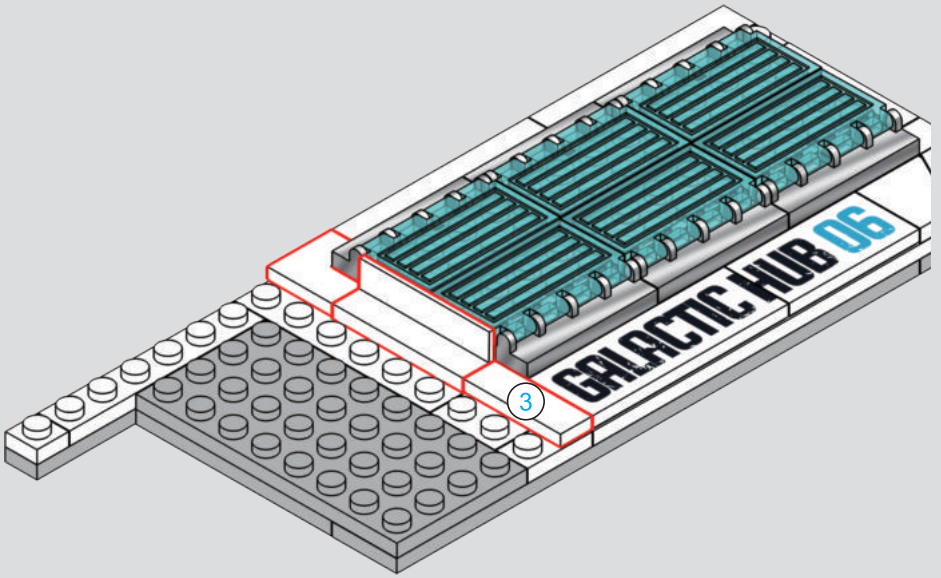

269

1

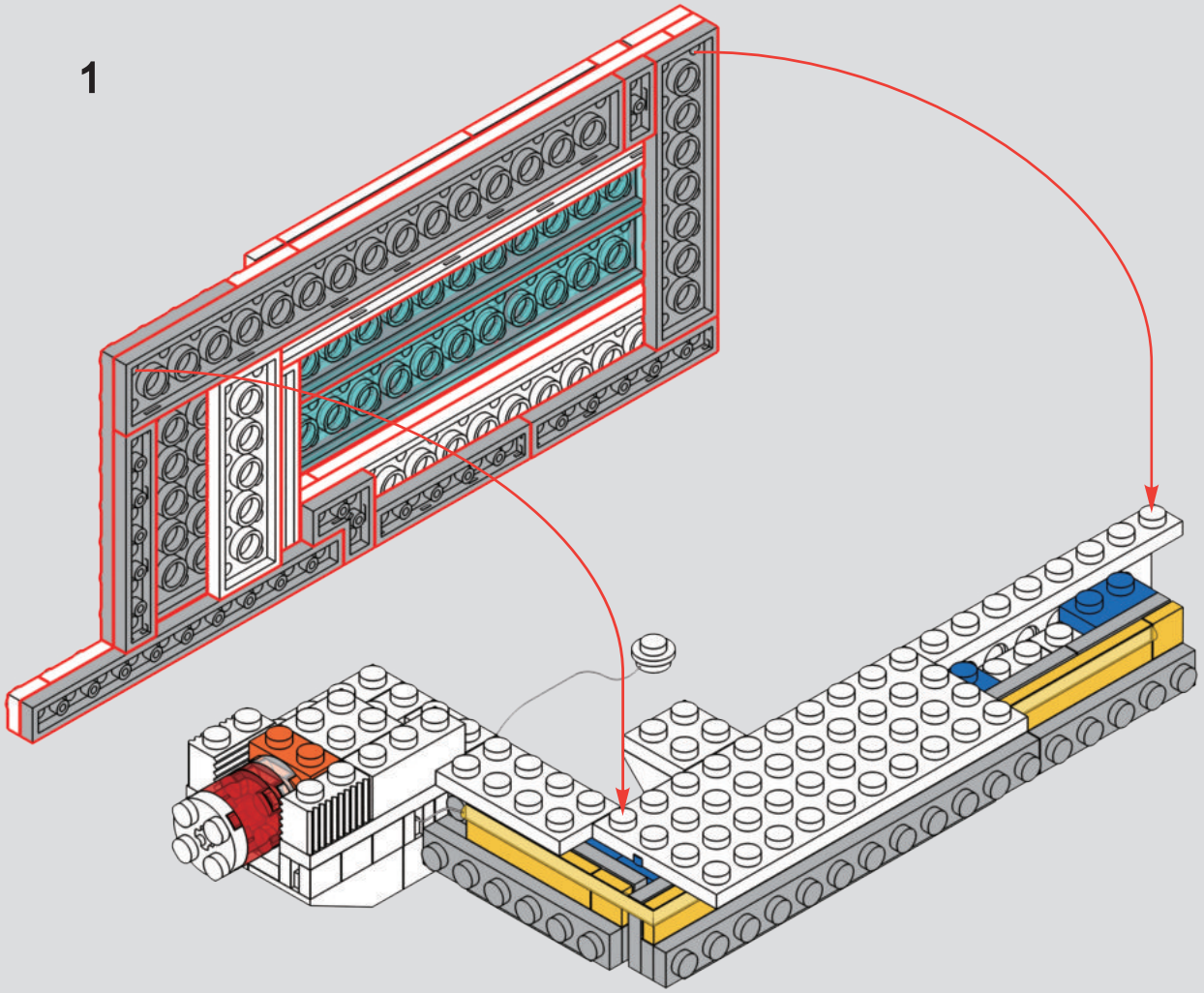

2

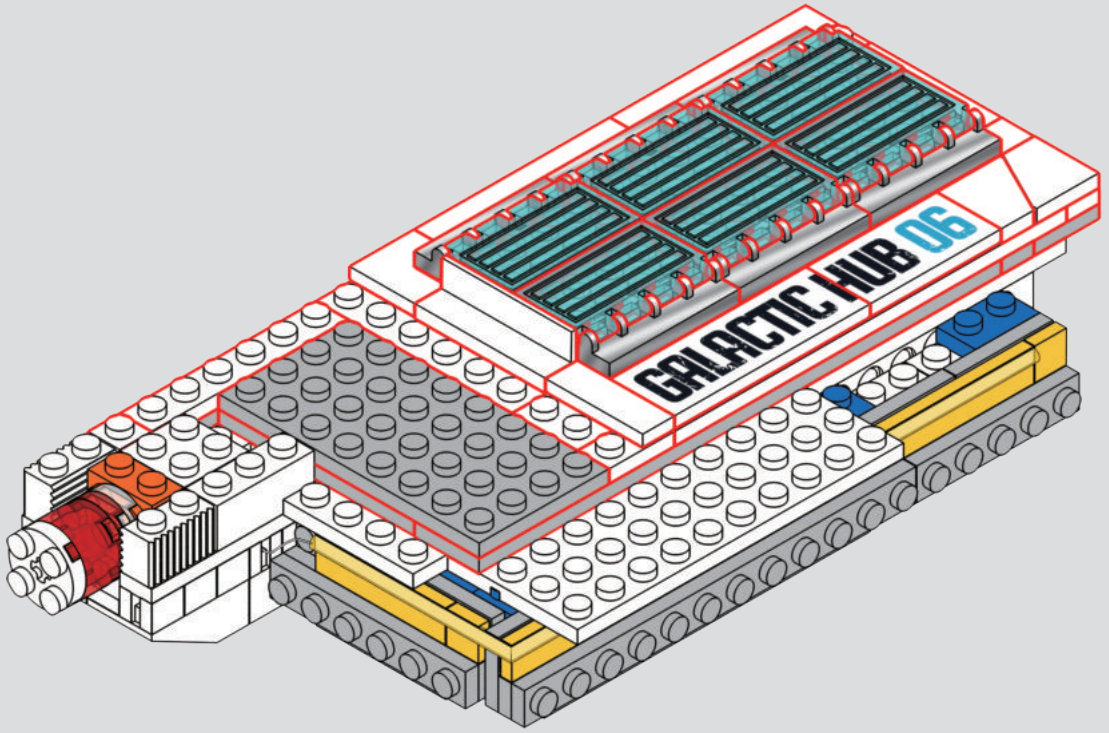

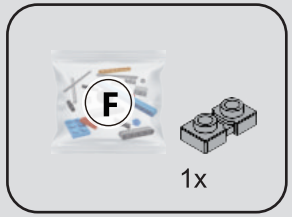

270

1

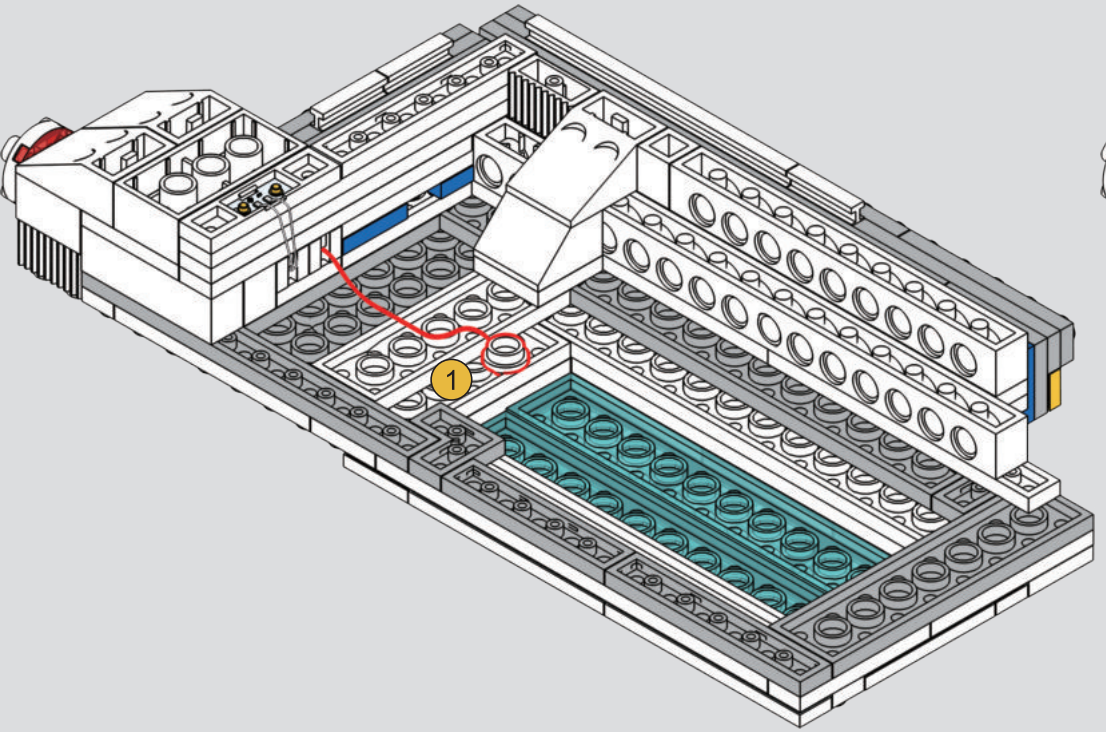

2

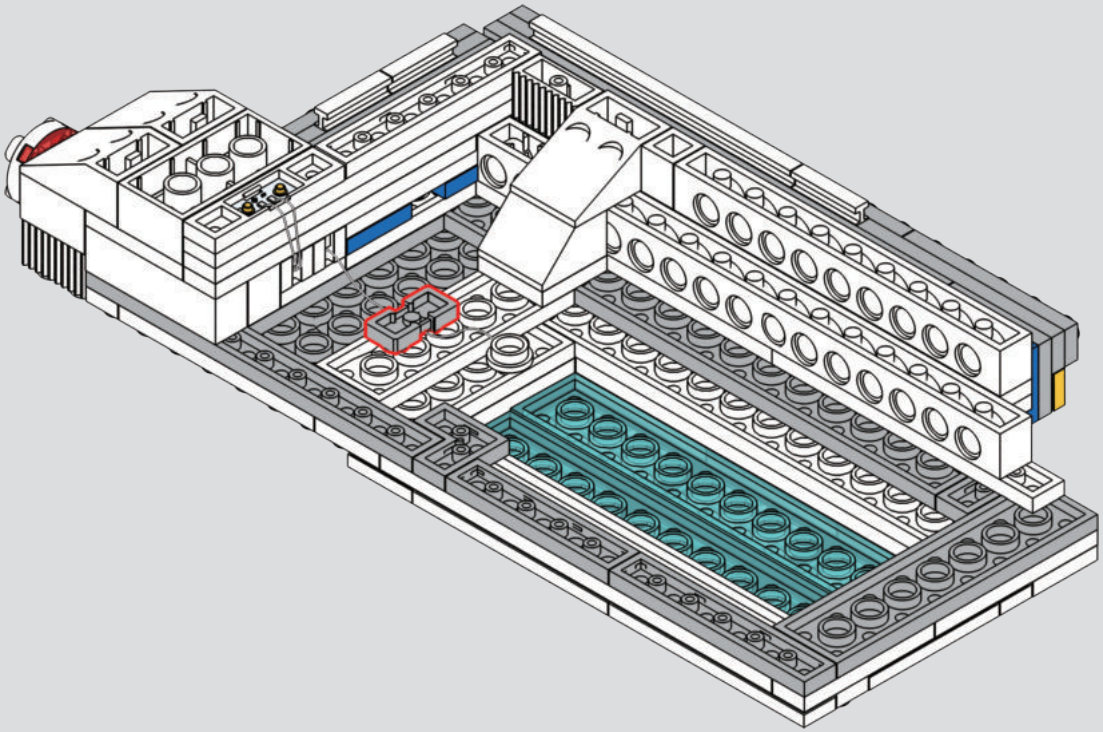

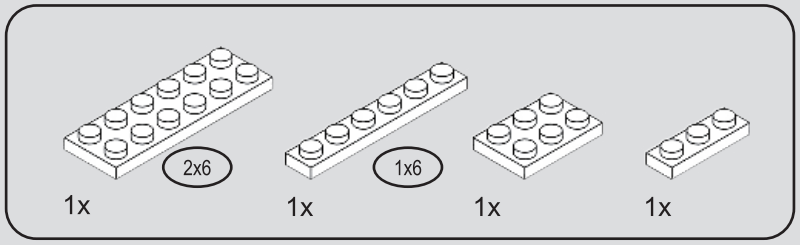

271

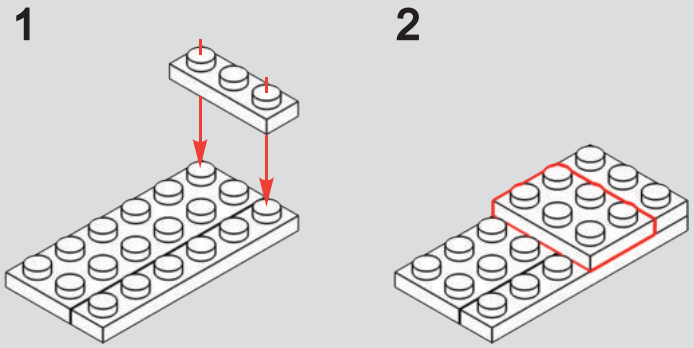

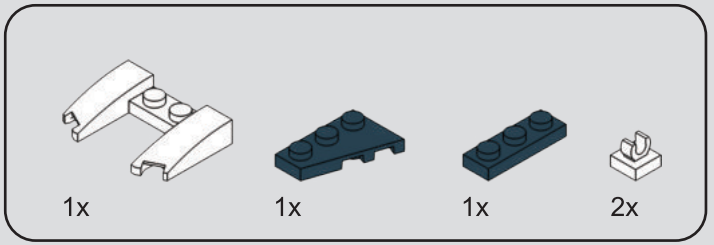

272

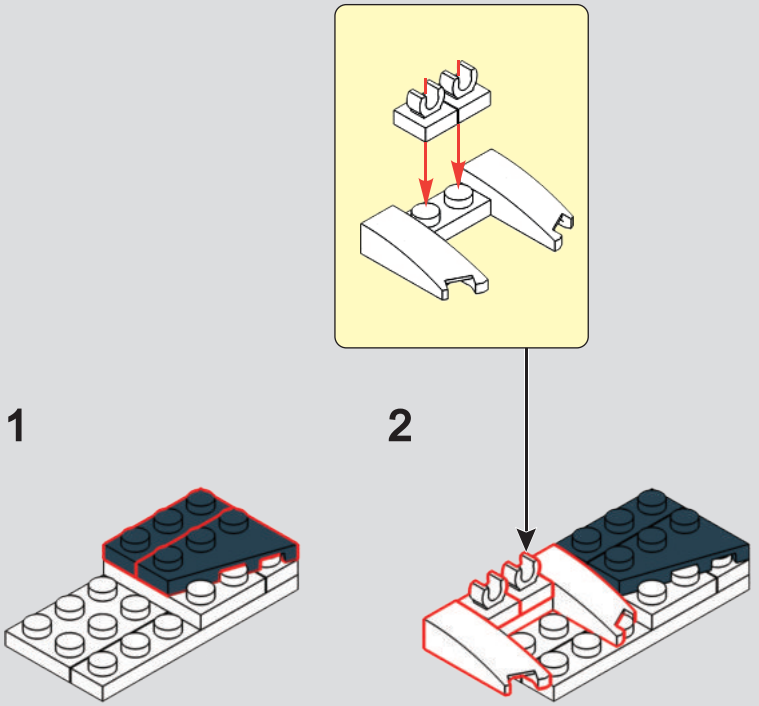

273

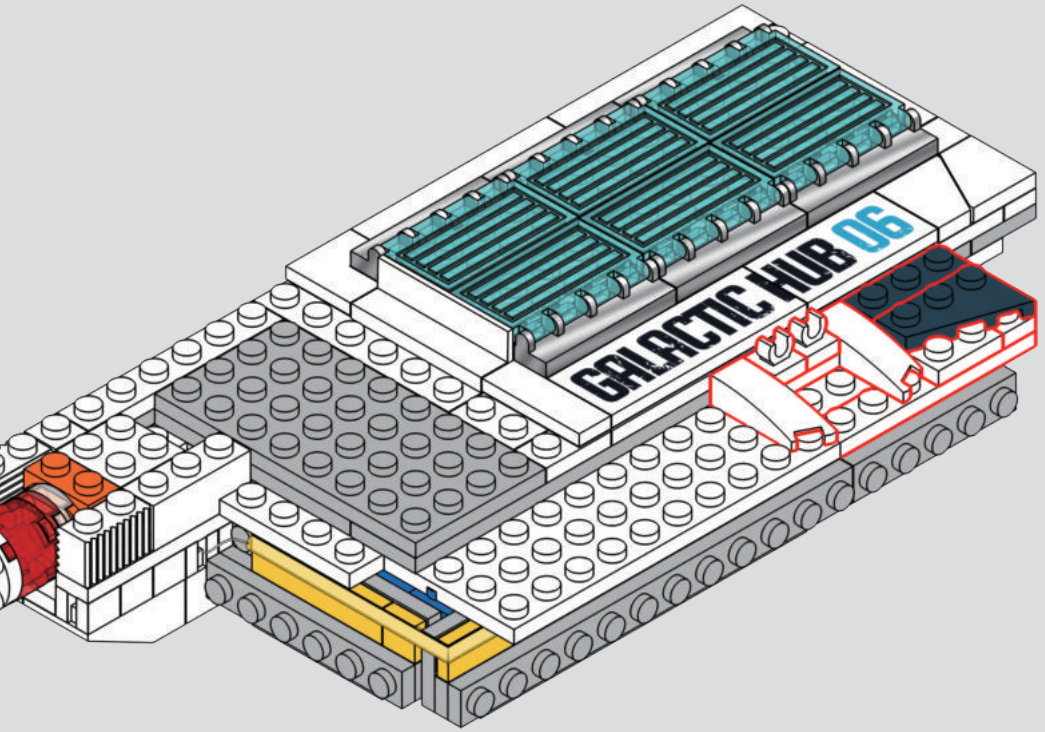

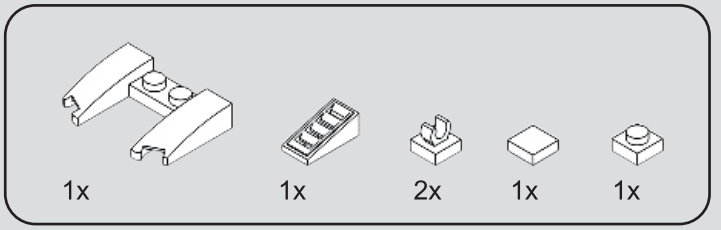

274

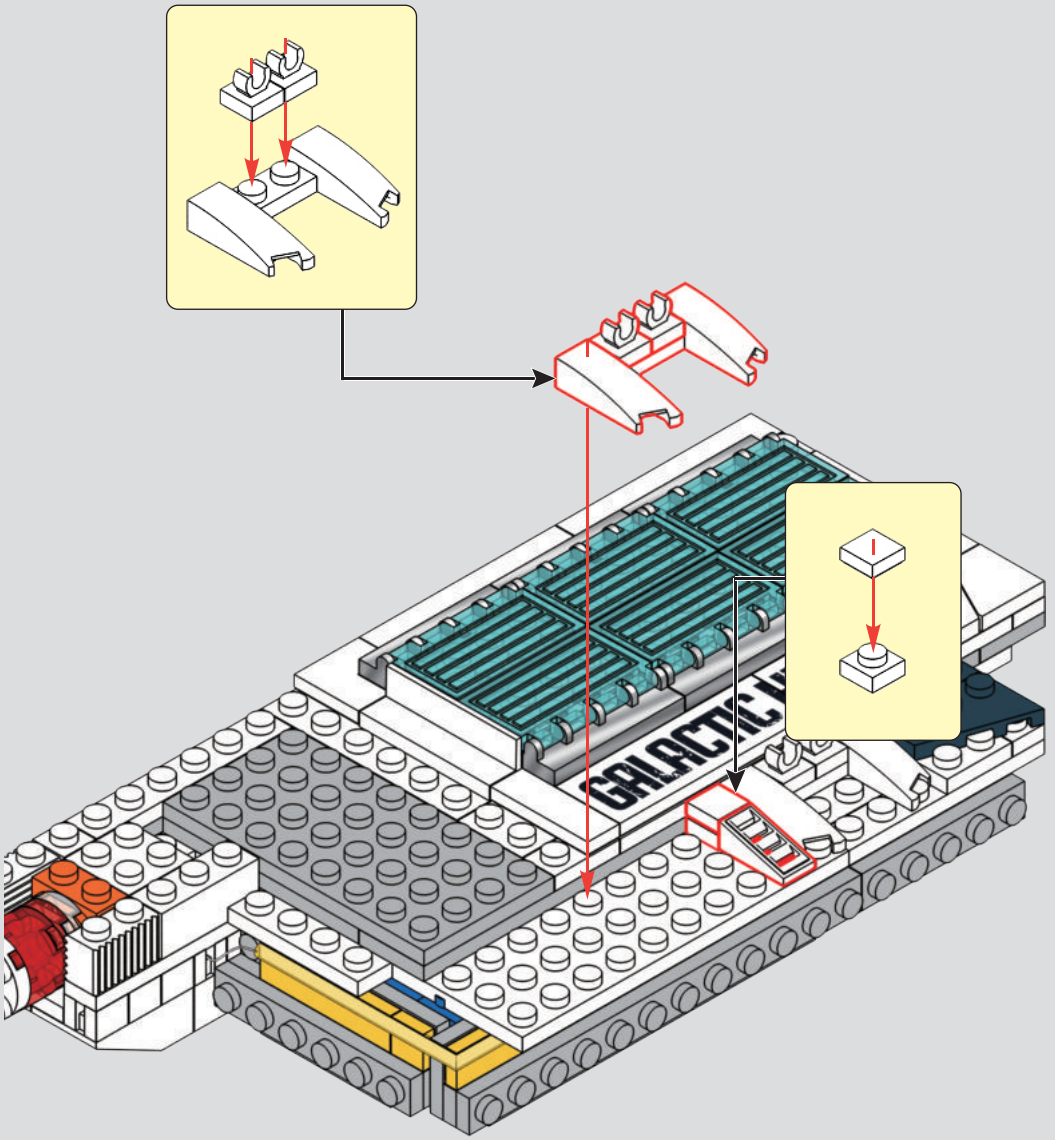

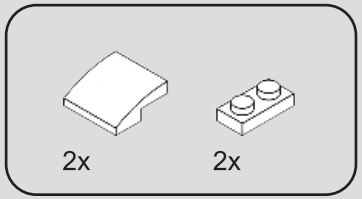

275

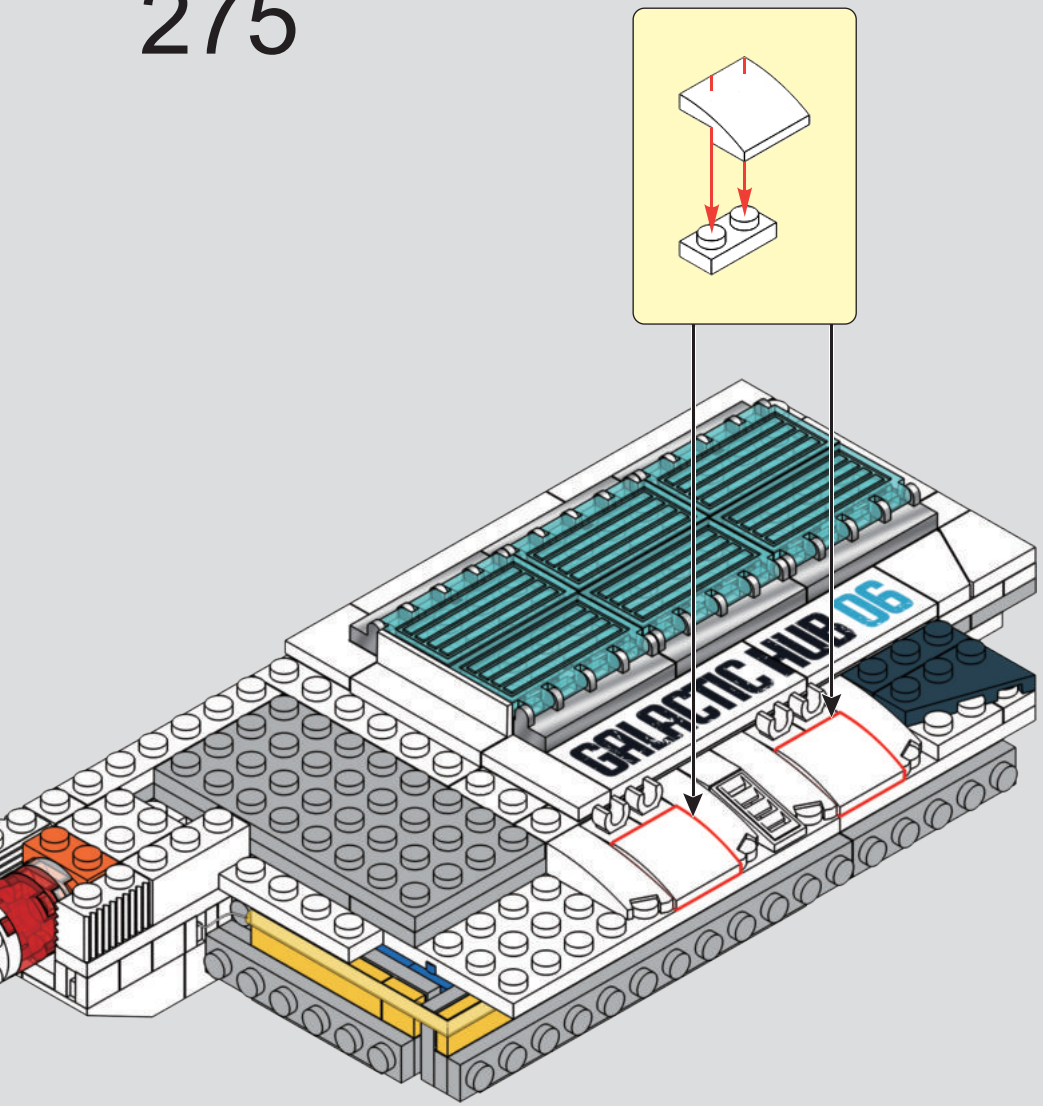

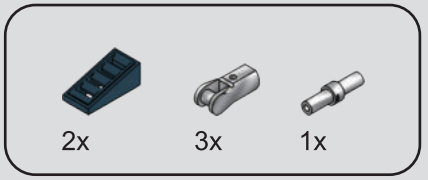

276

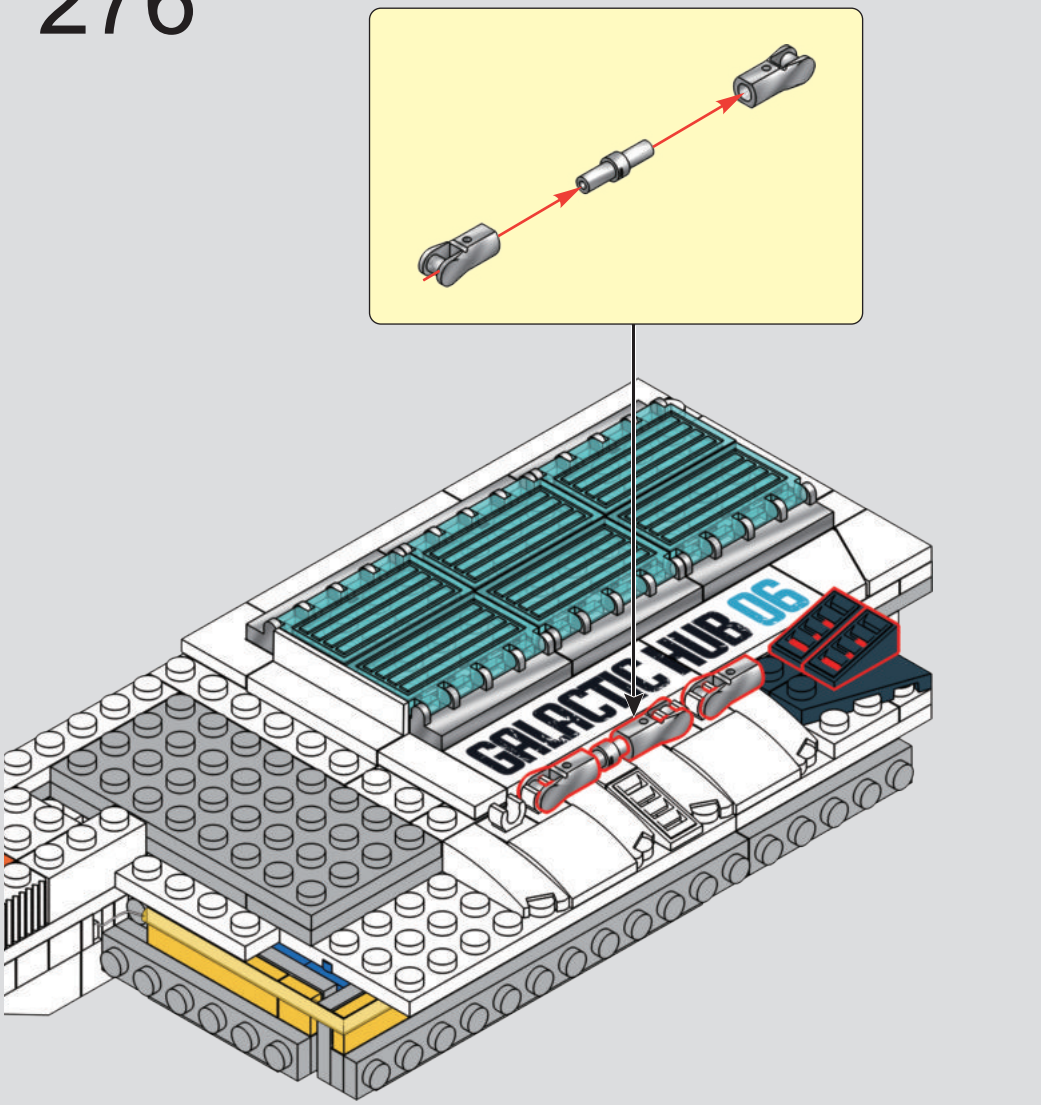

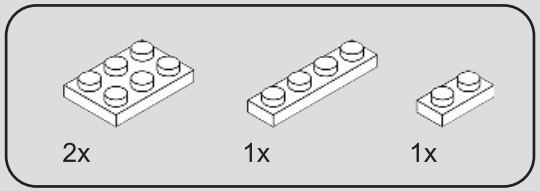

277

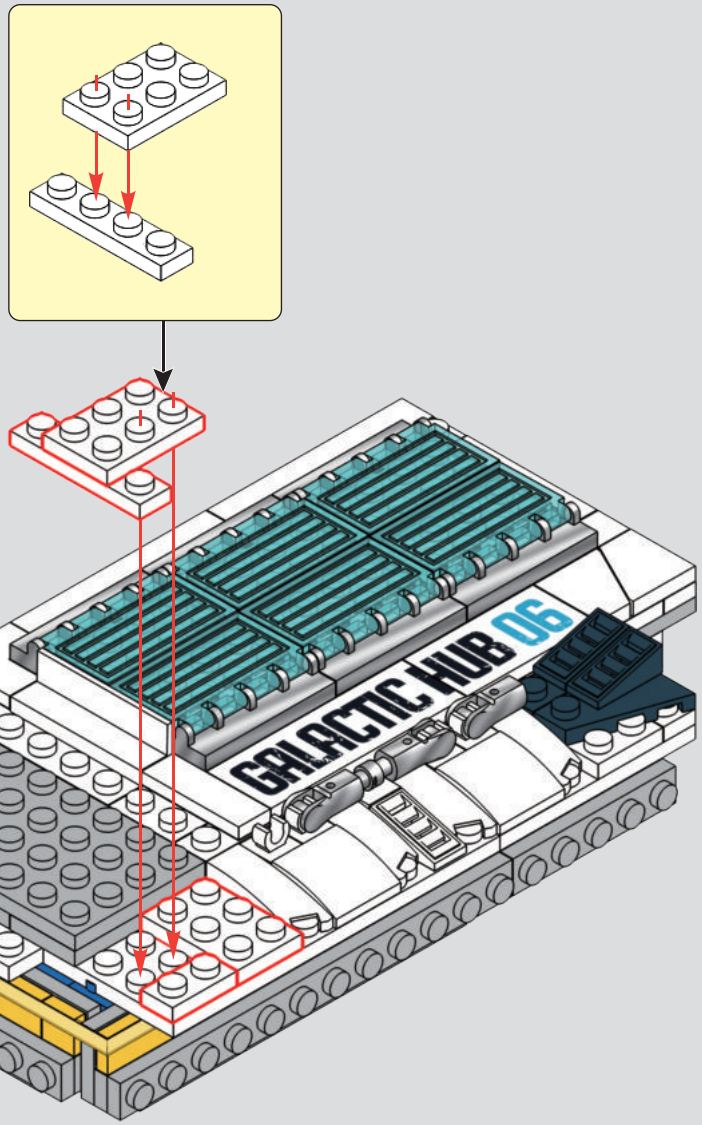

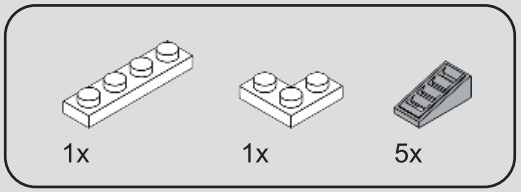

278

1

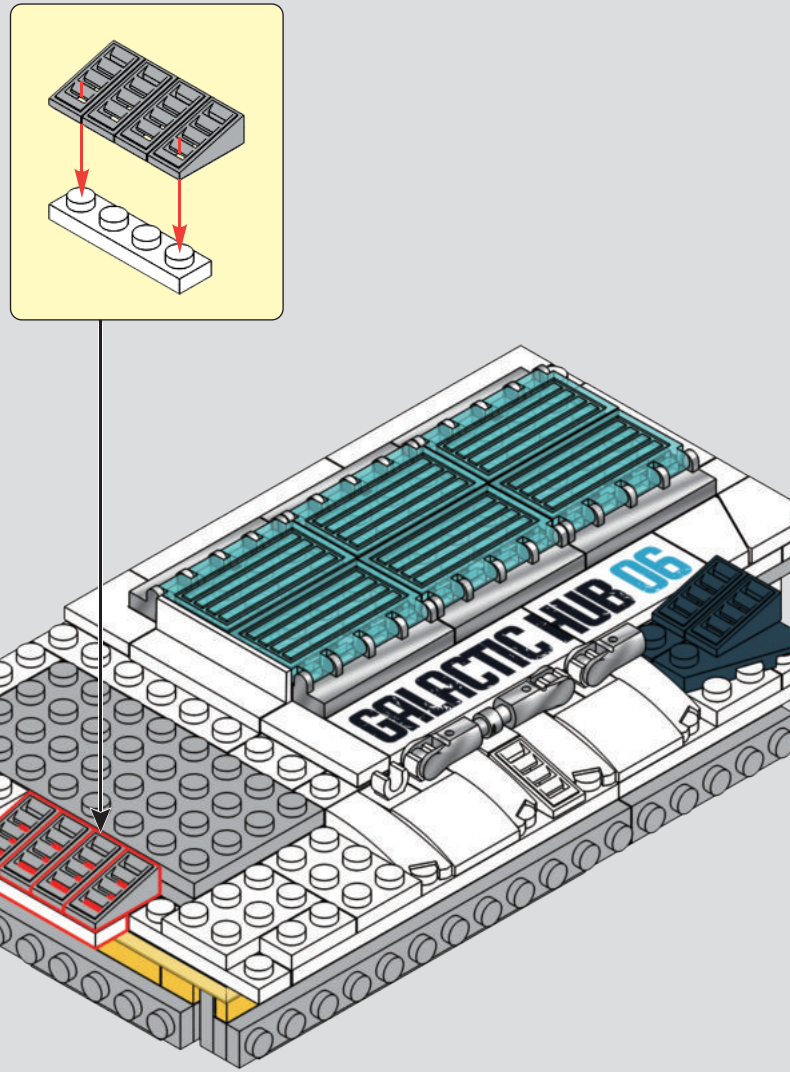

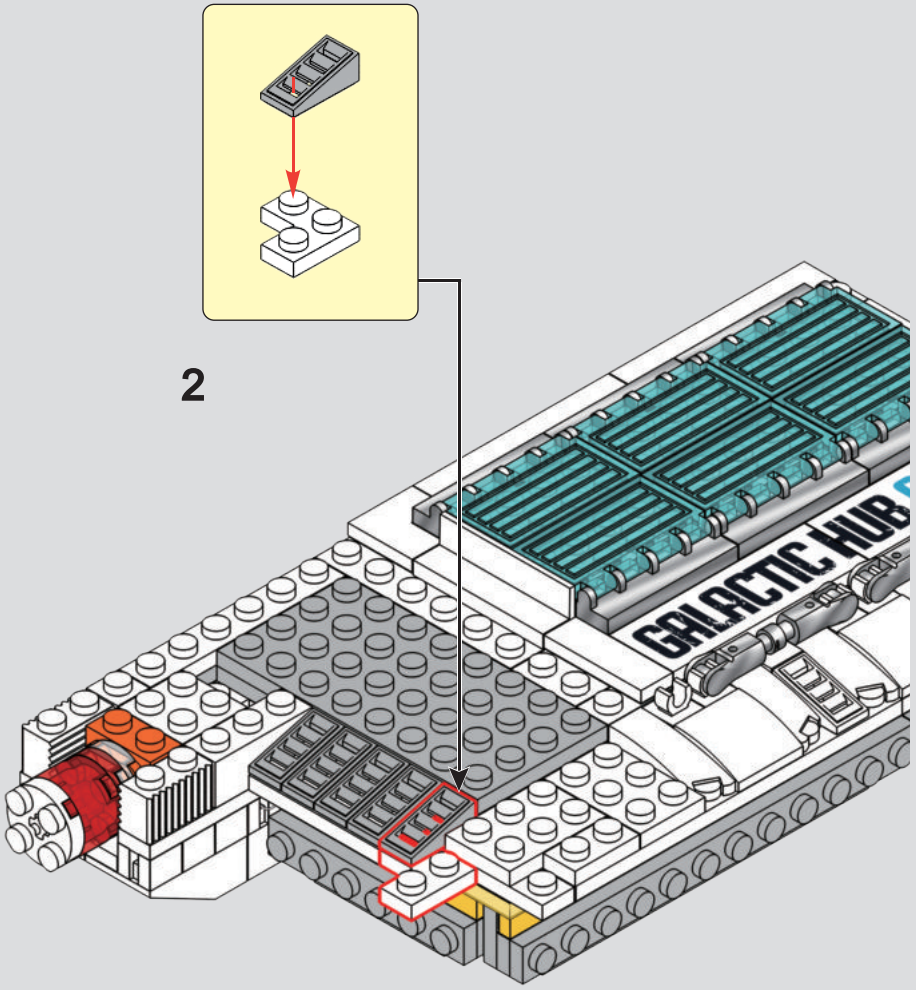

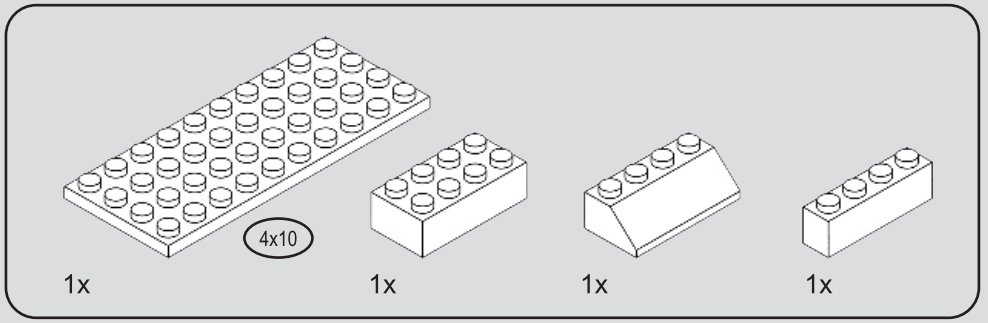

279

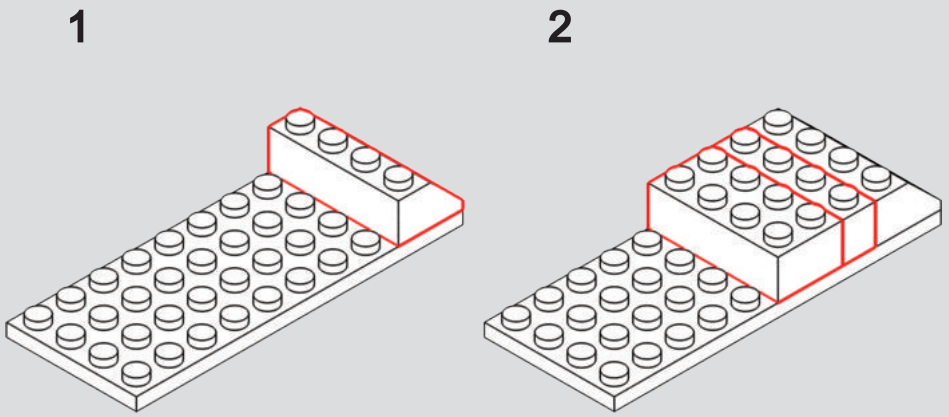

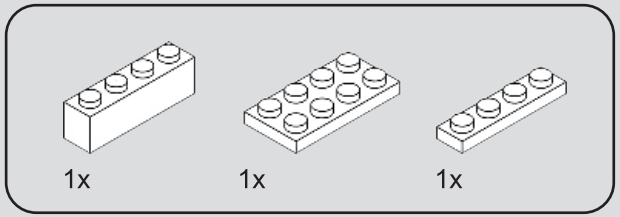

280

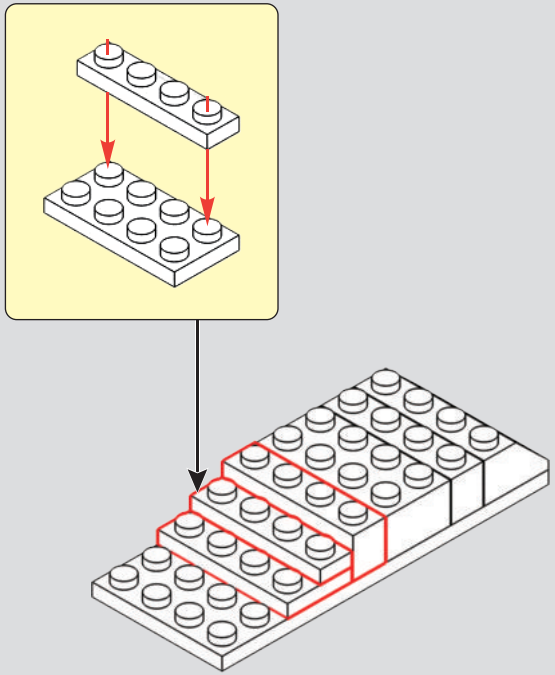

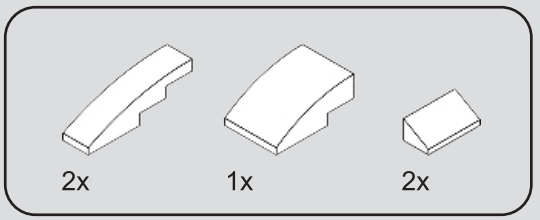

281

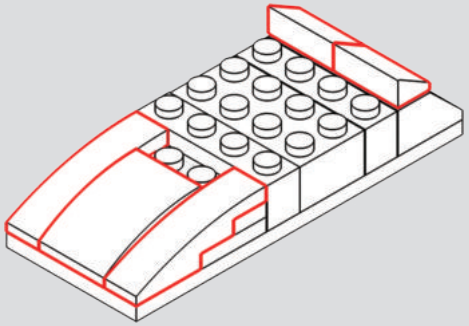

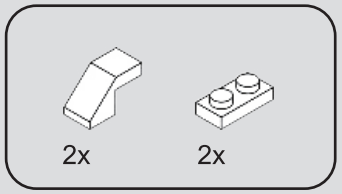

282

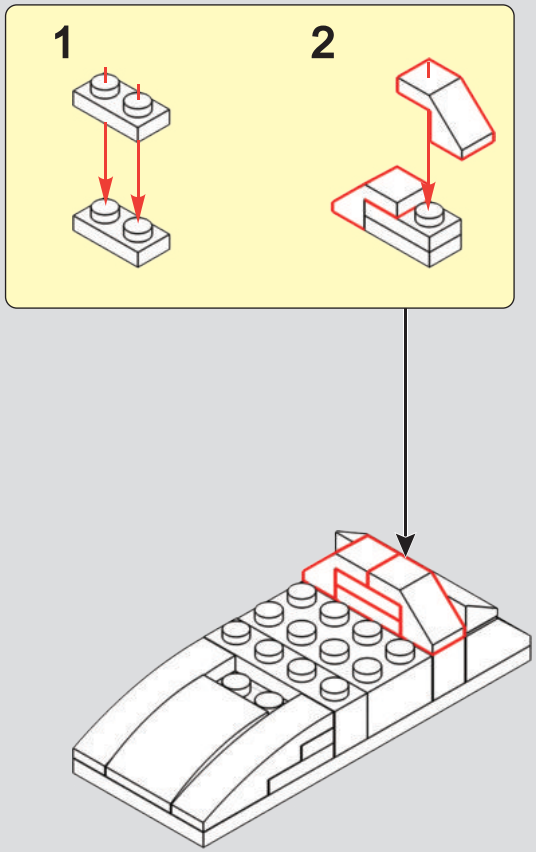

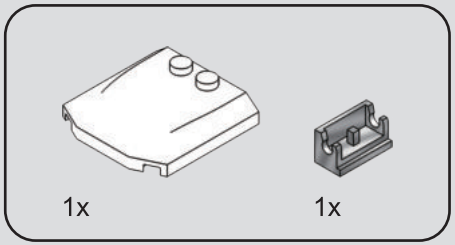

283

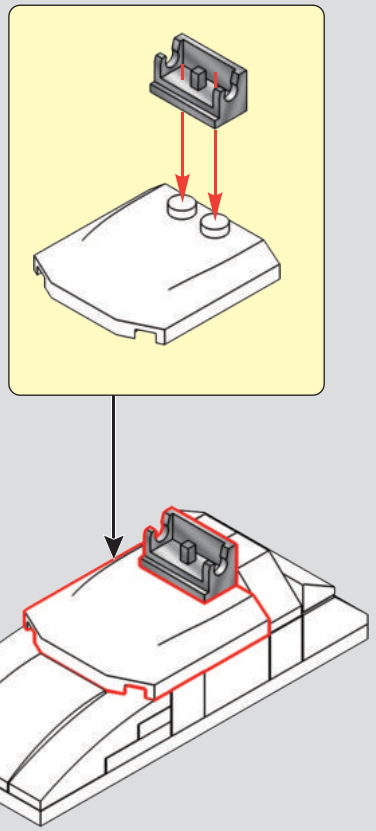

284

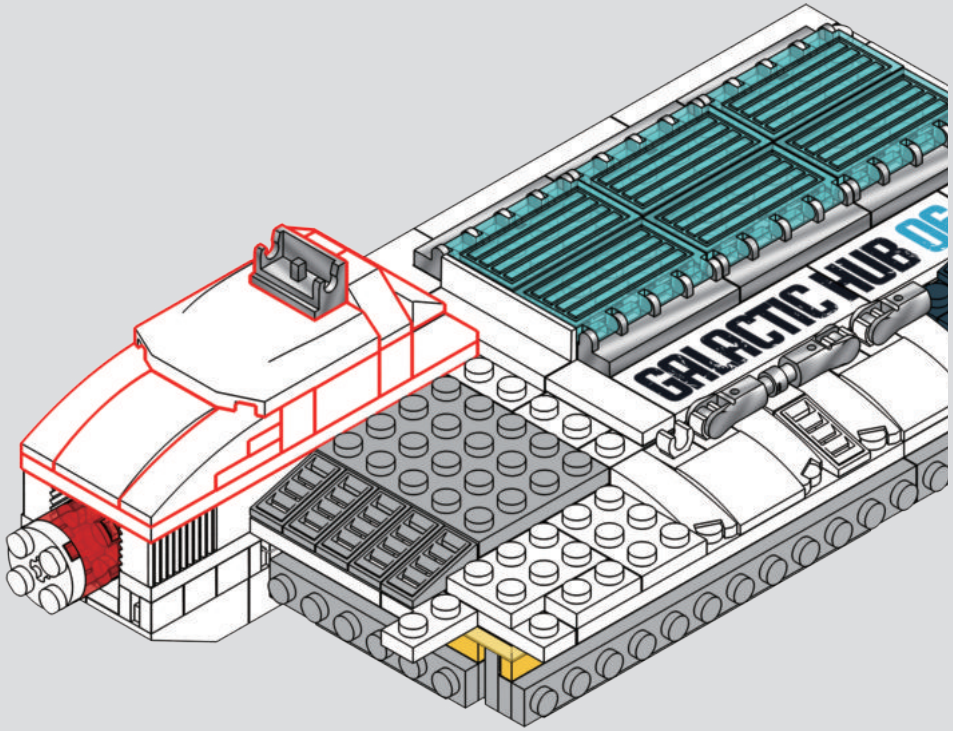

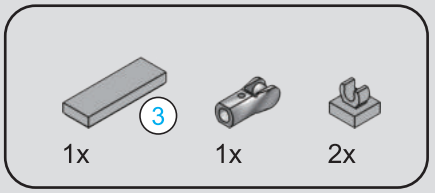

285

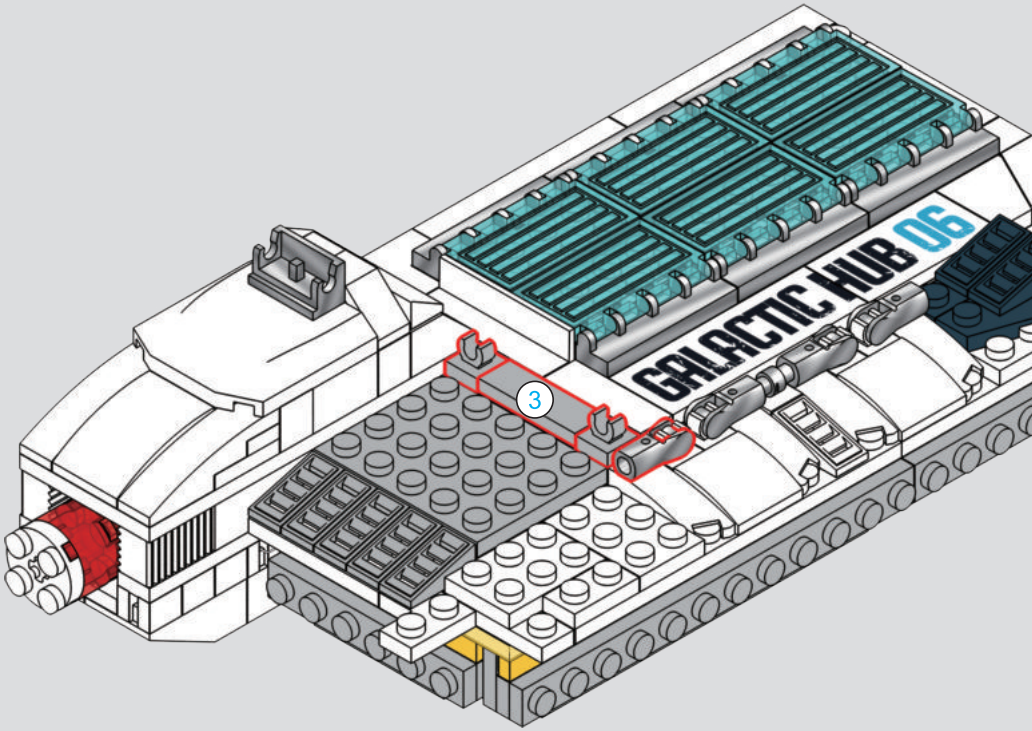

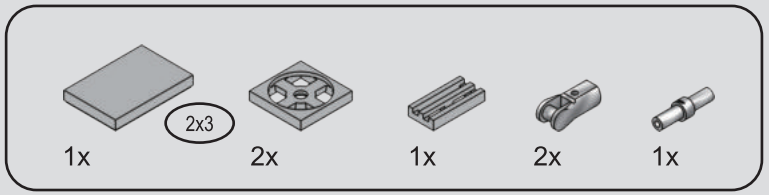

286

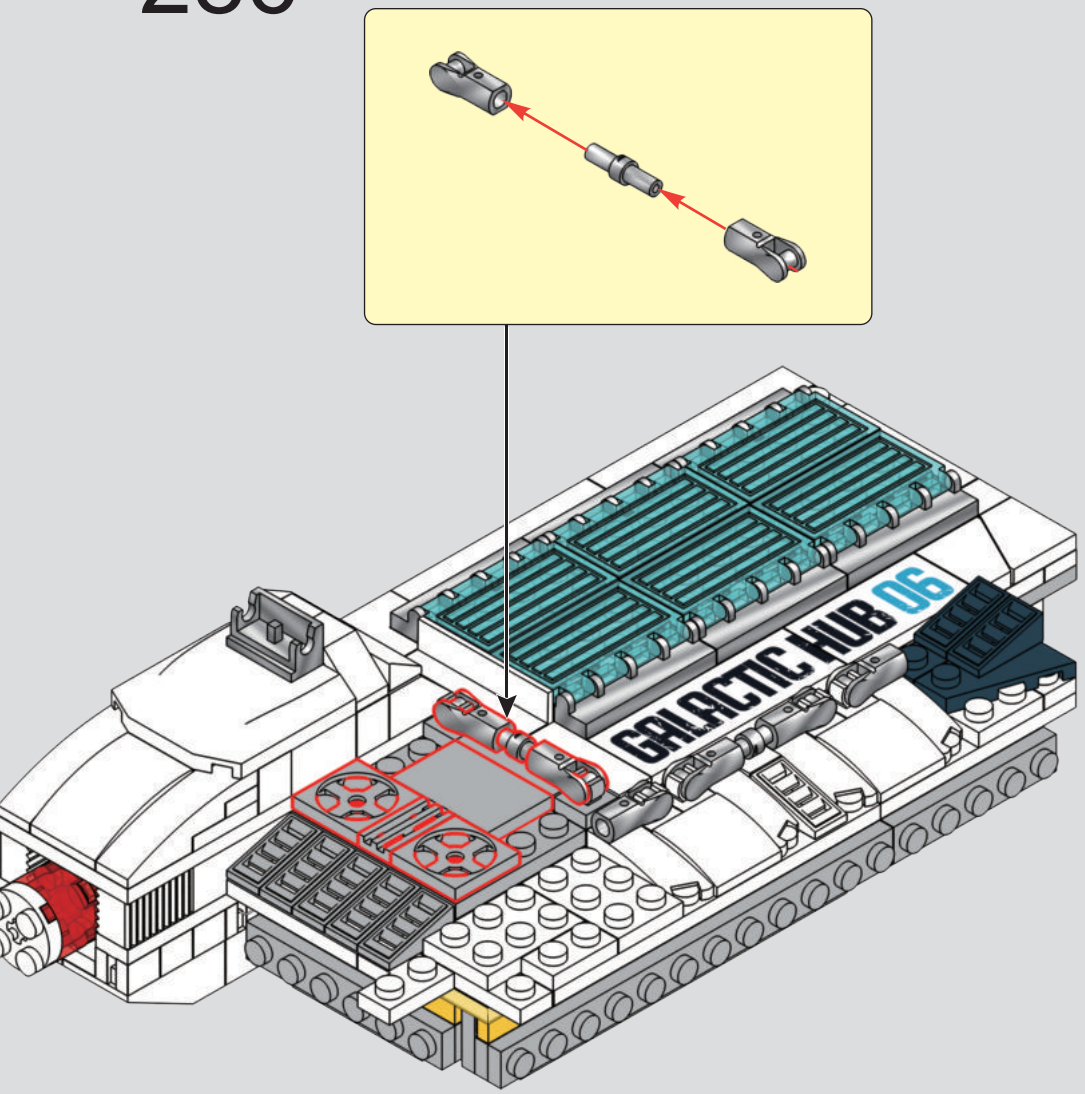

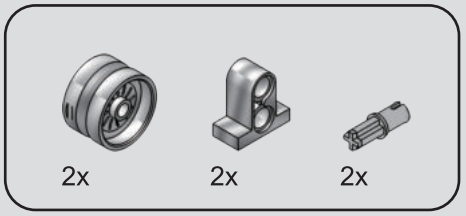

287

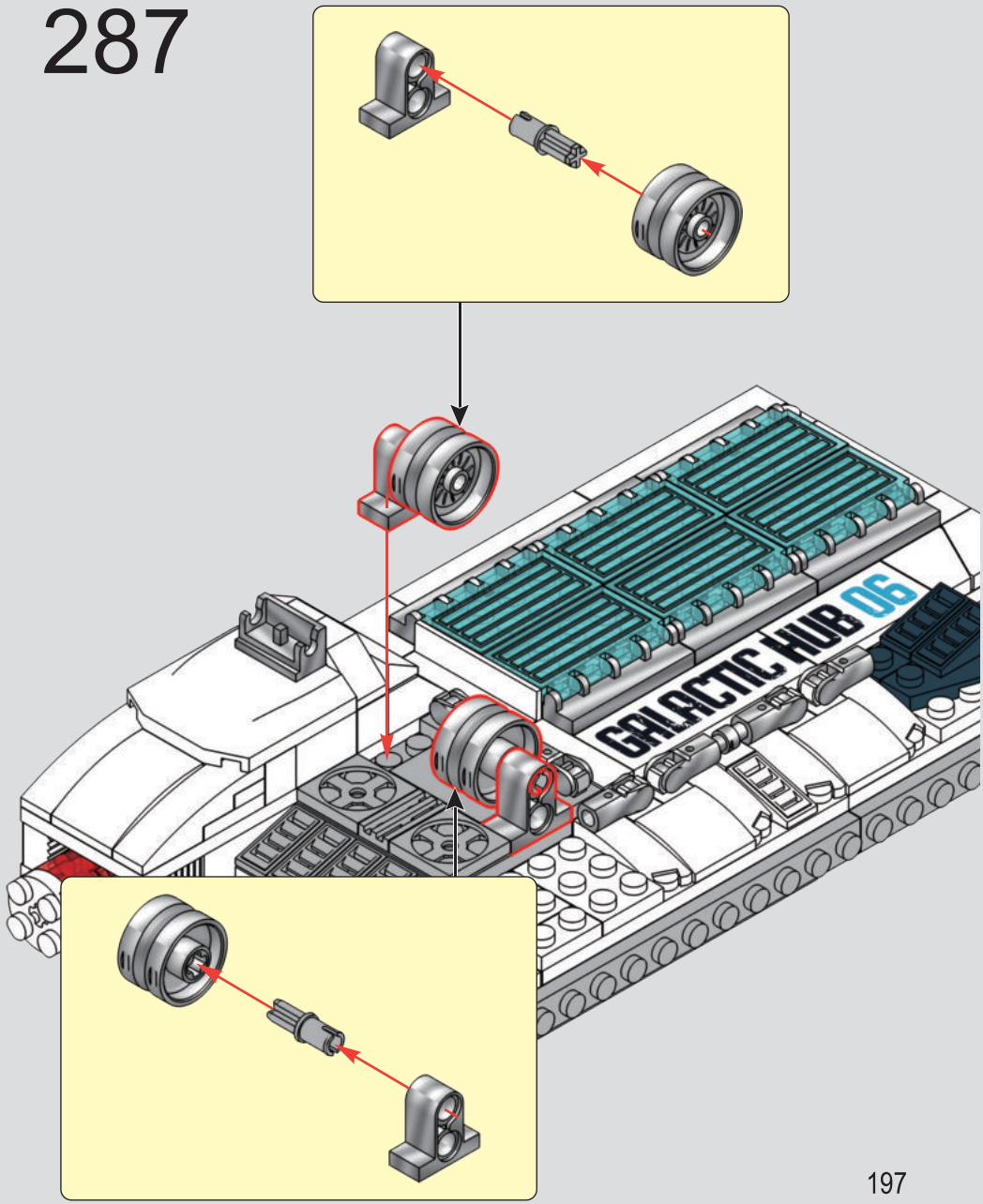

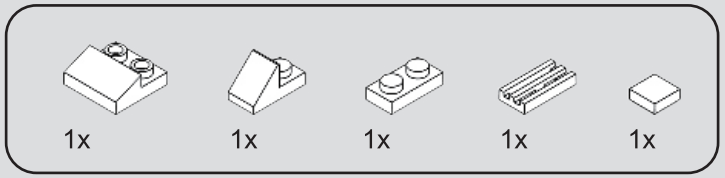

288

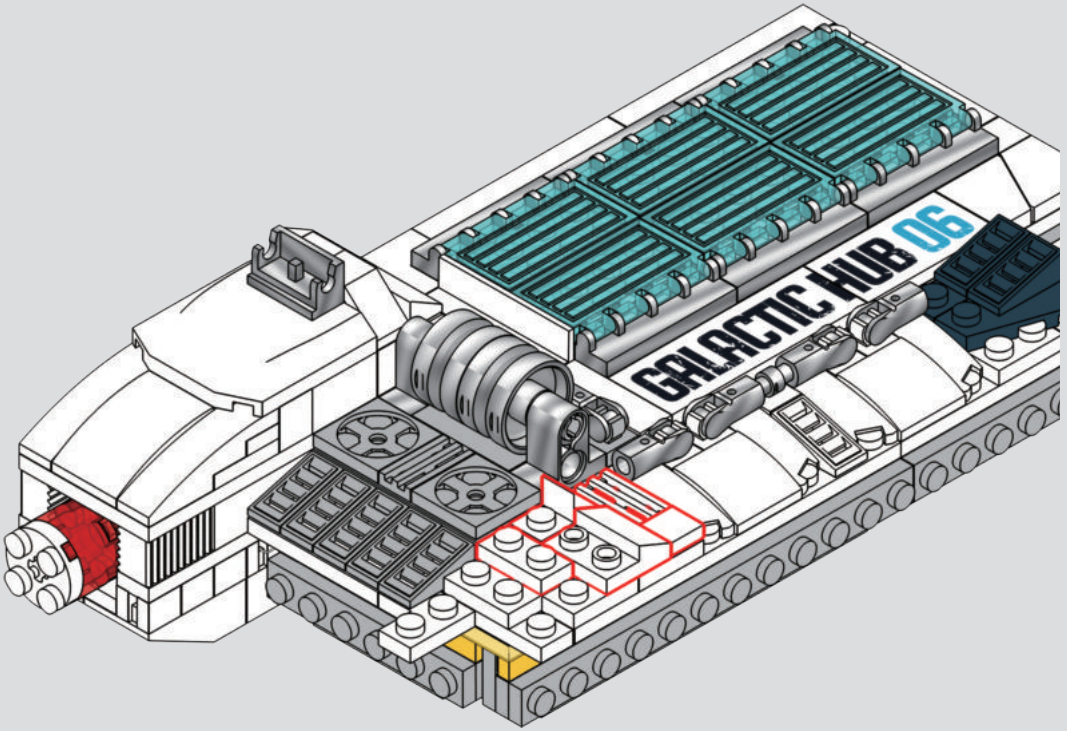

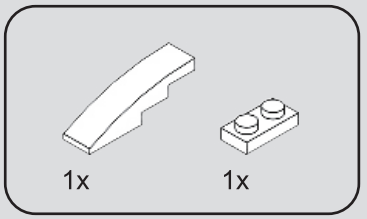

289

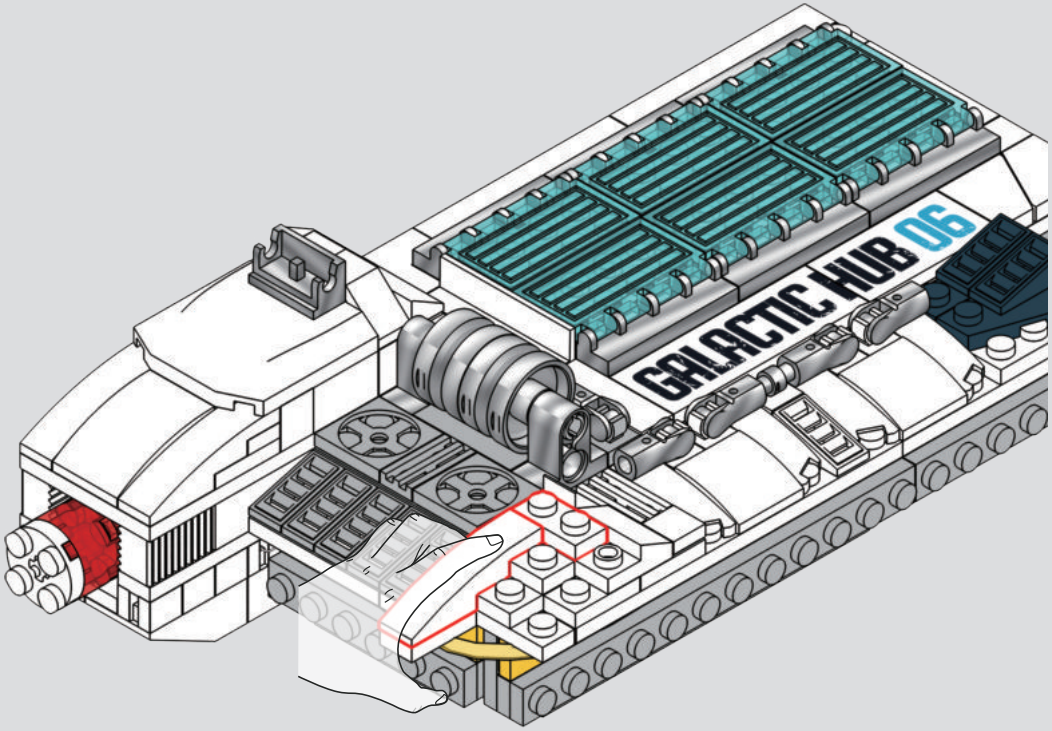

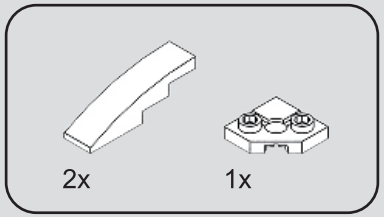

290

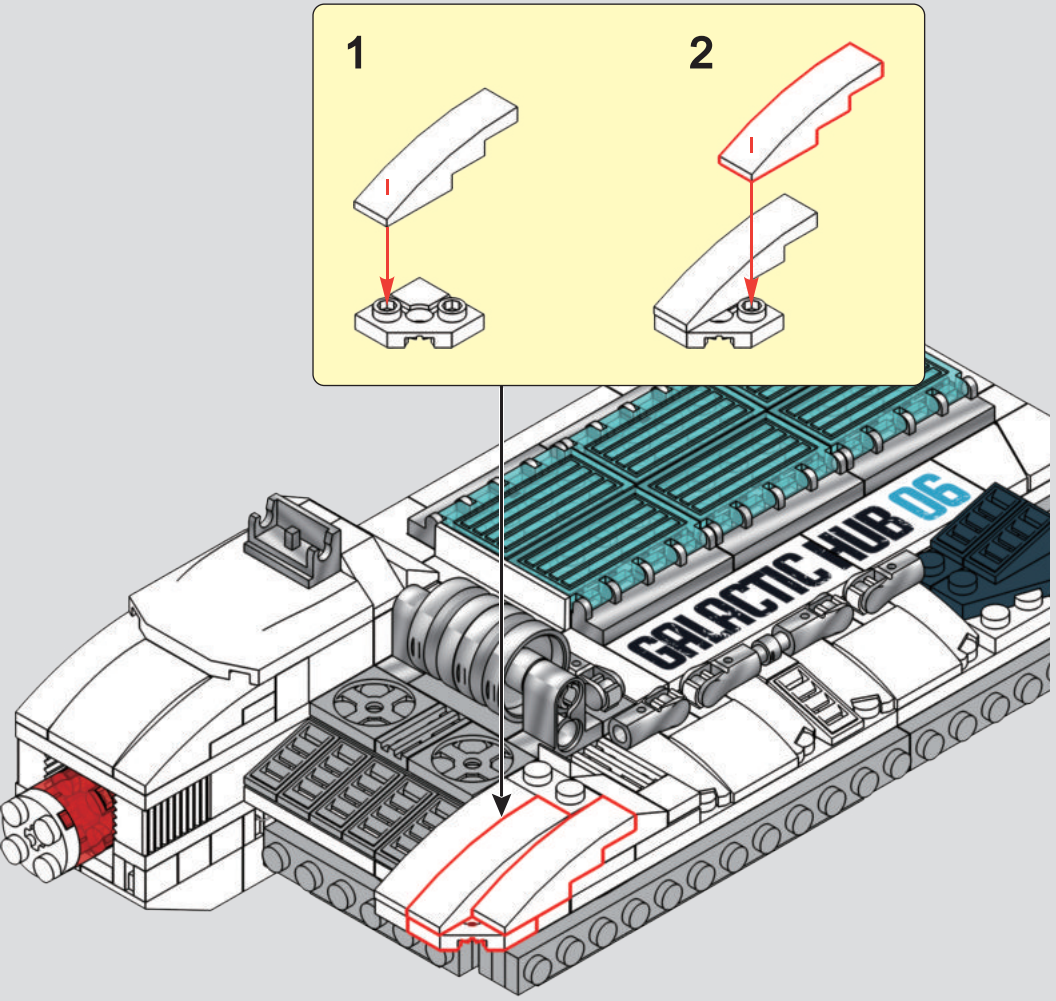

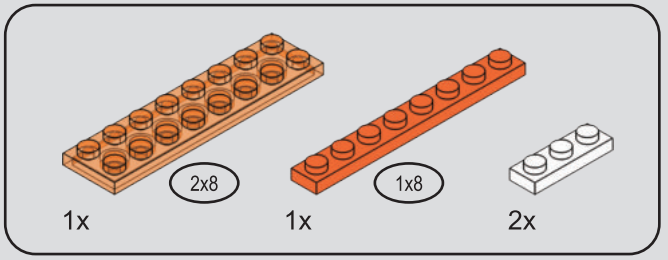

291

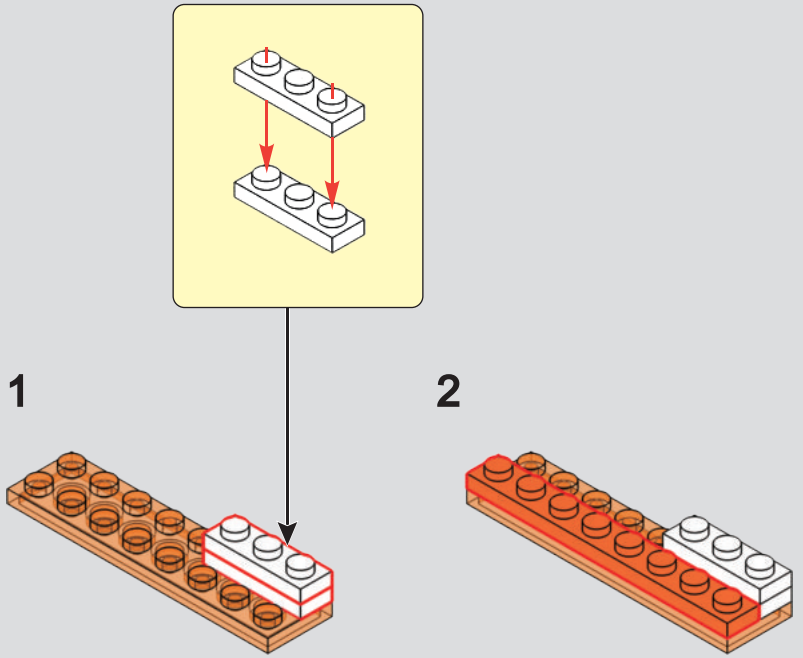

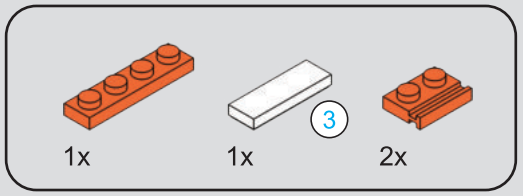

292

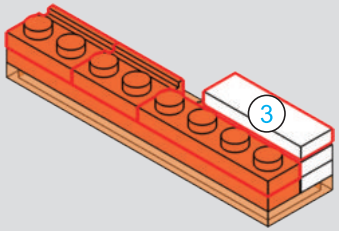

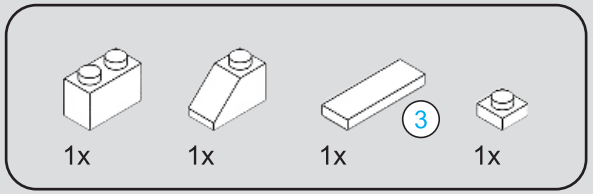

293

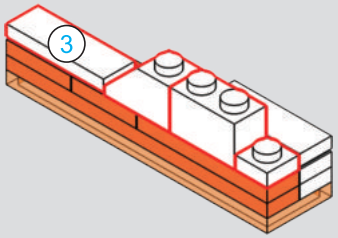

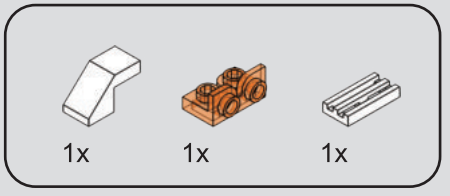

294

1

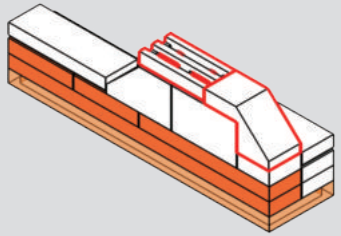

2

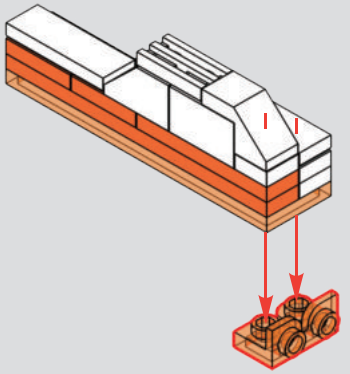

295

1

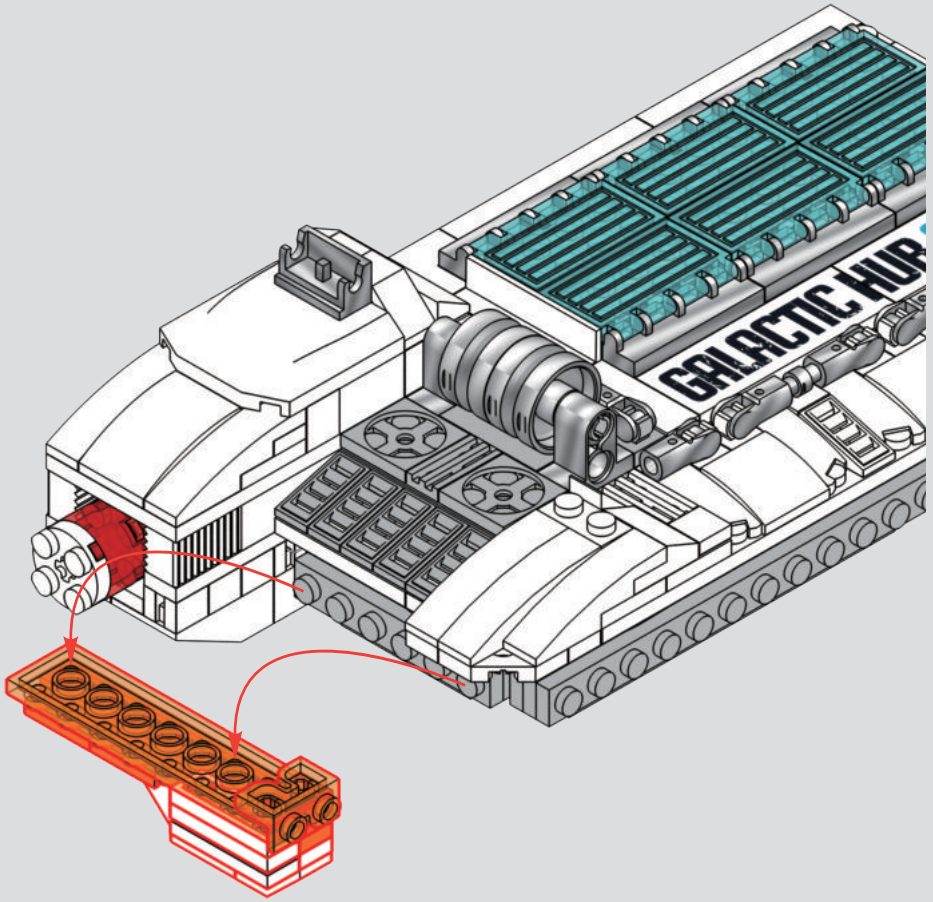

2

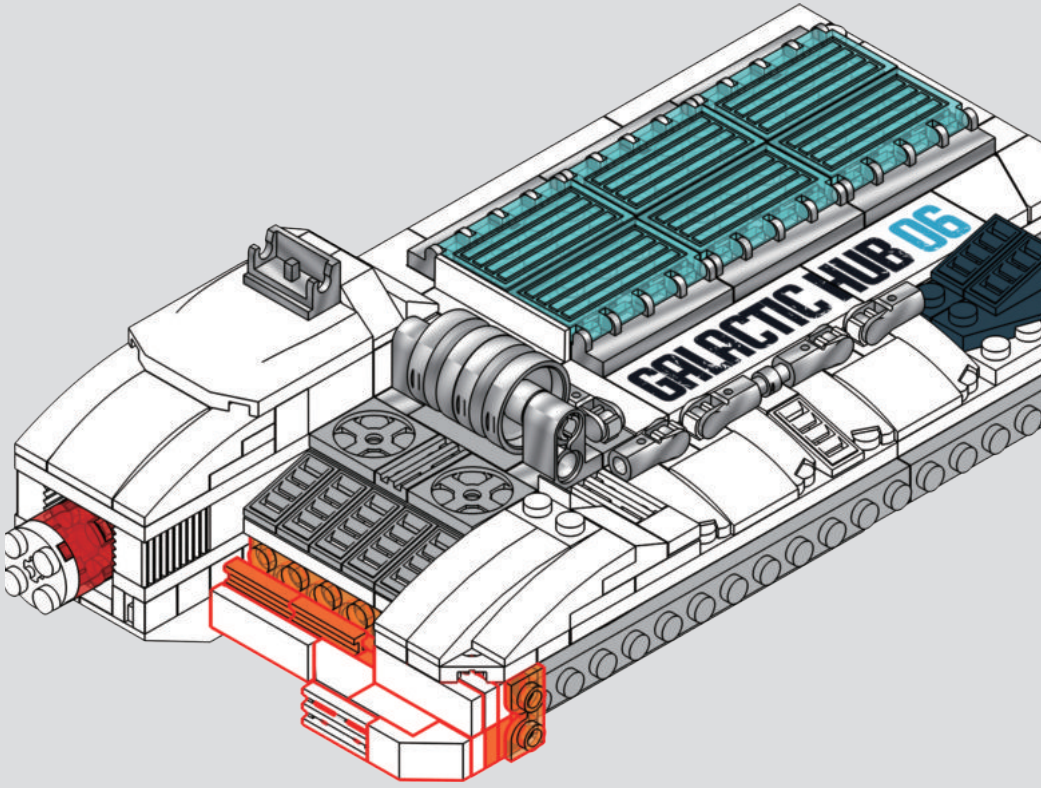

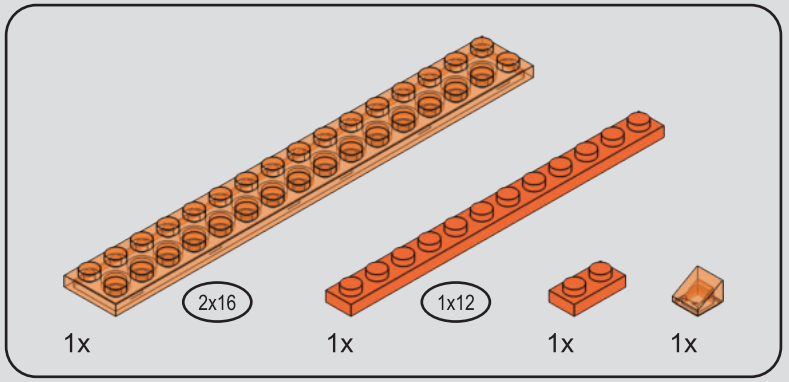

296

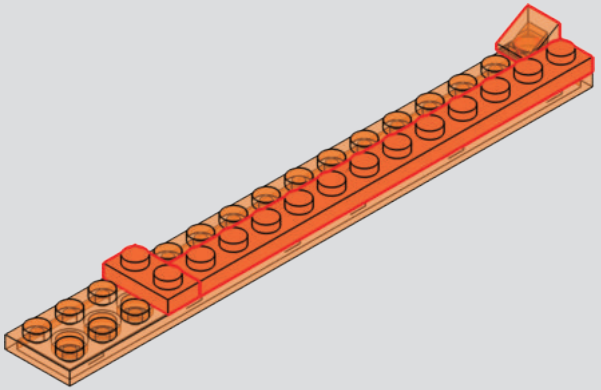

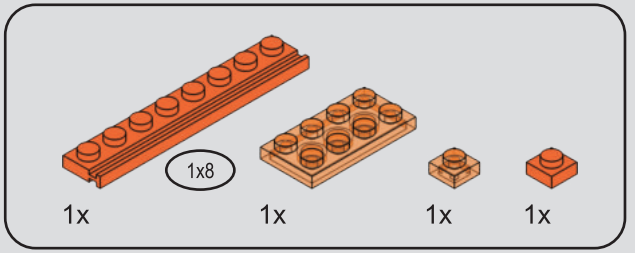

297

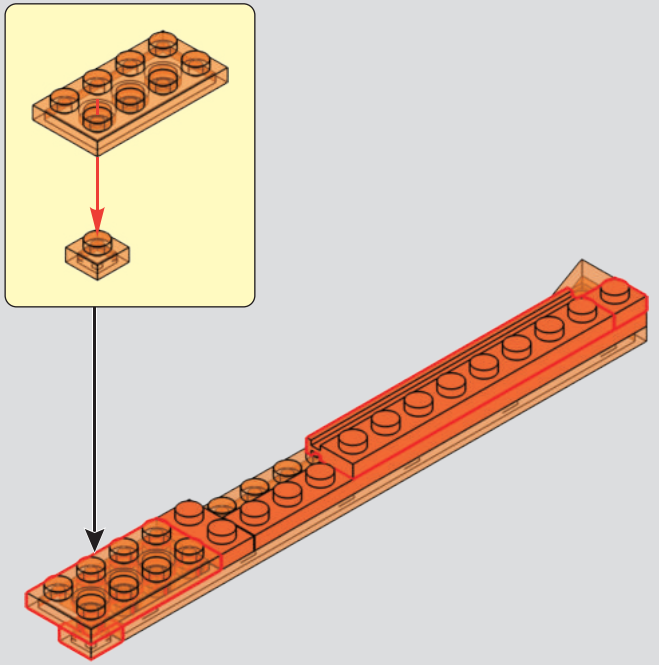

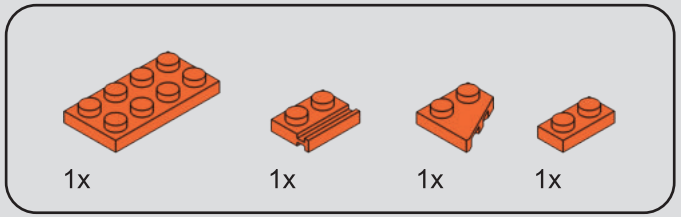

298

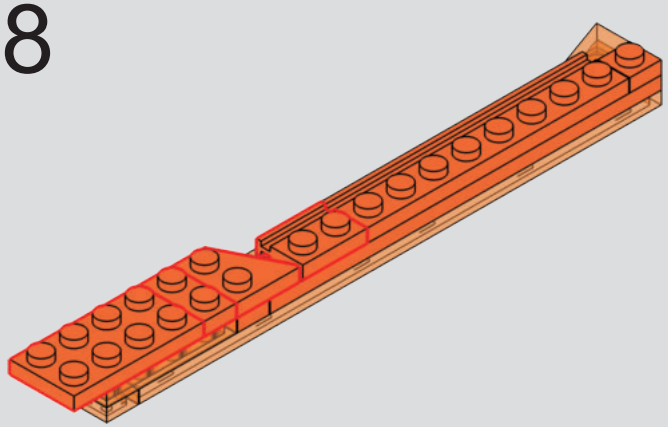

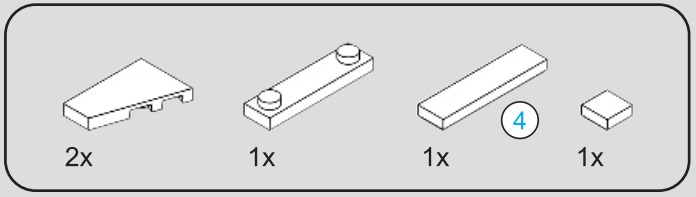

299

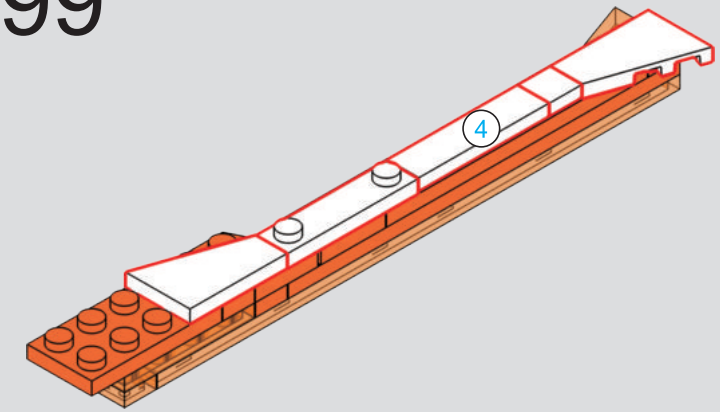

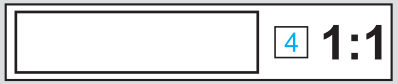

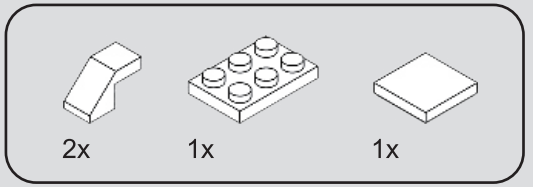

300

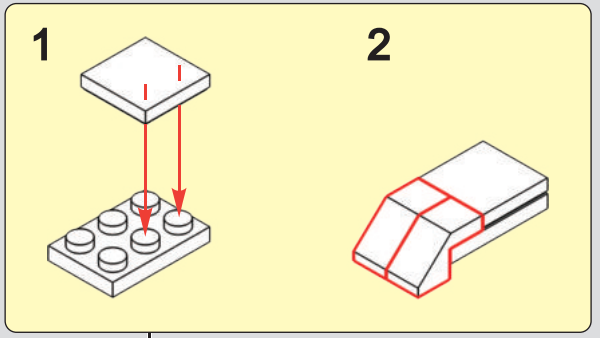



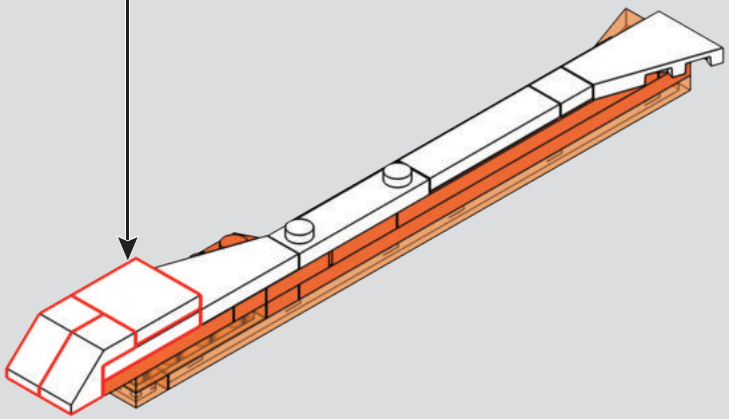

301

1

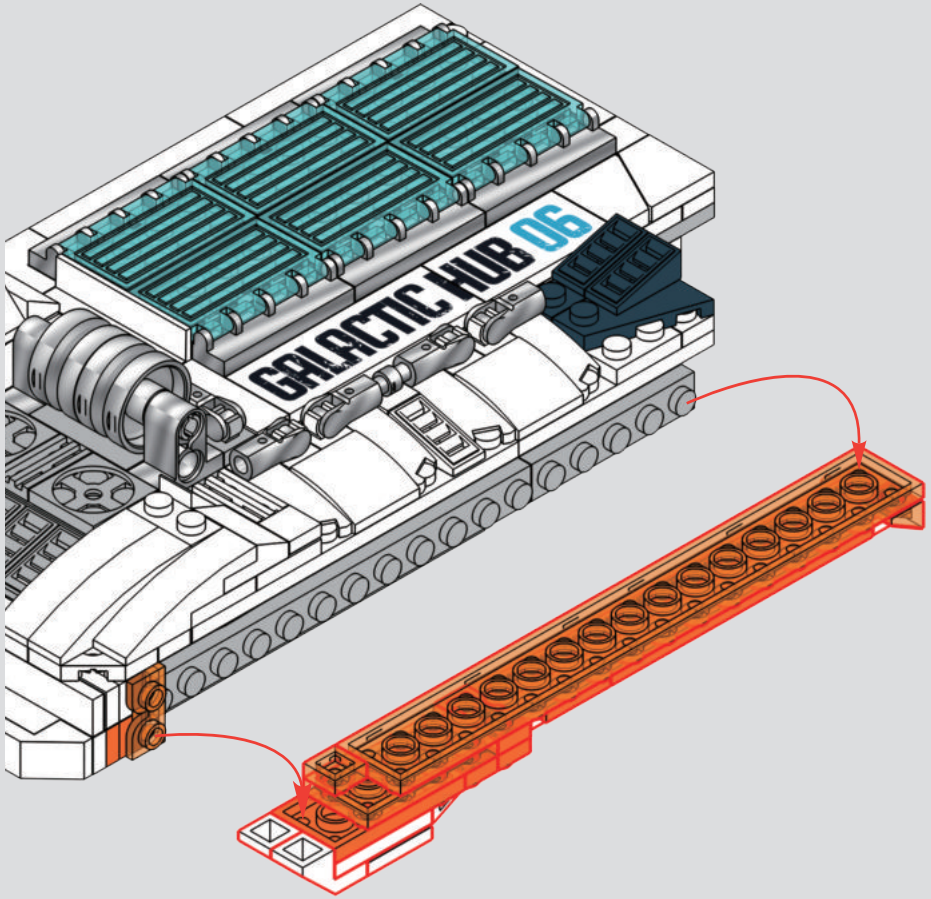

2

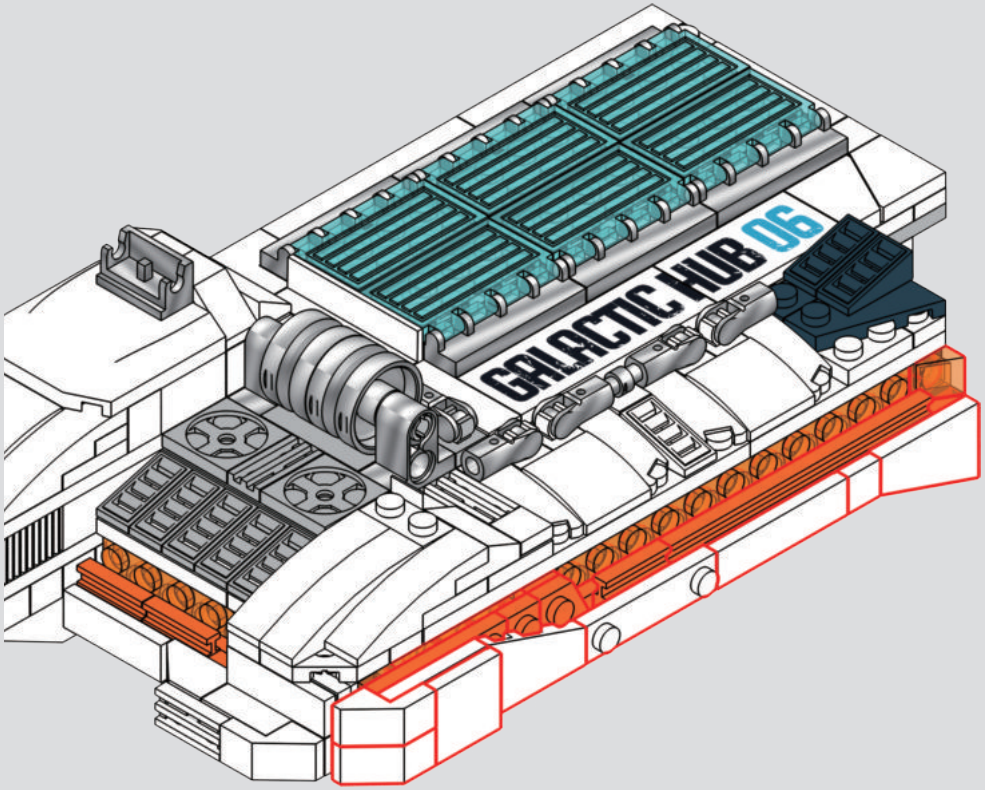

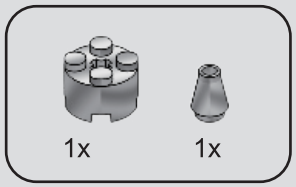

302

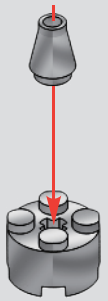

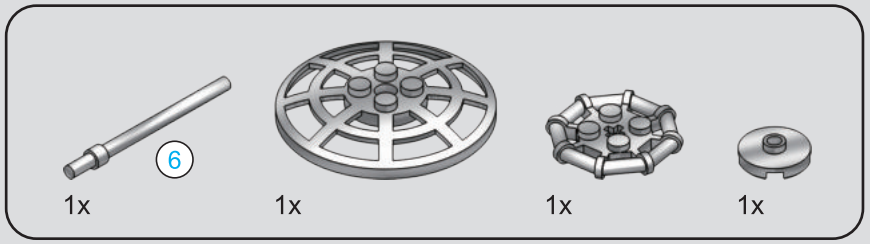

303

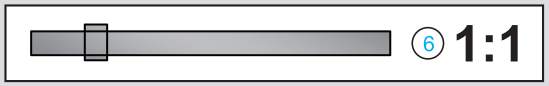

1

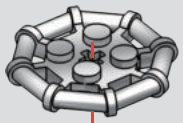



2

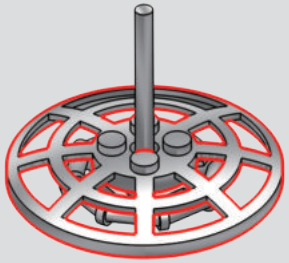

3

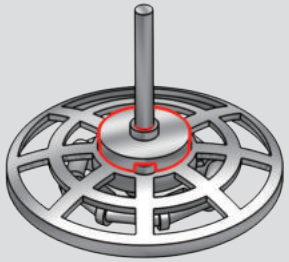

304

1

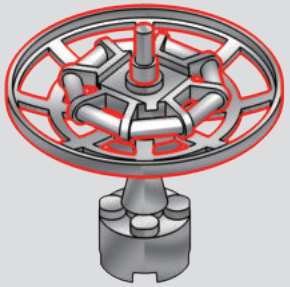

2

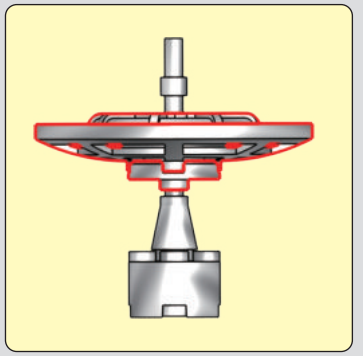

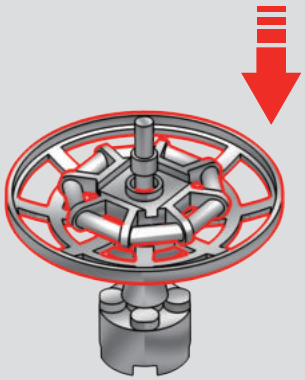

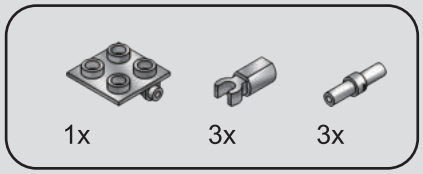

305

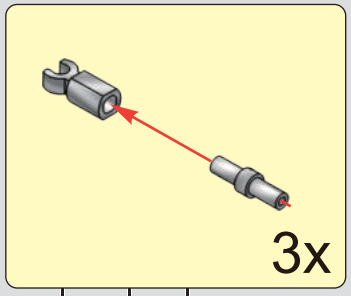

1

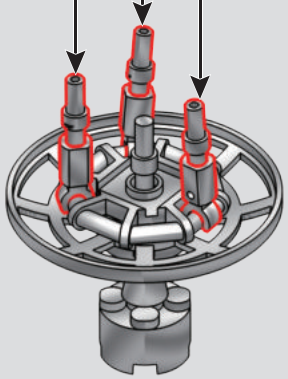

2

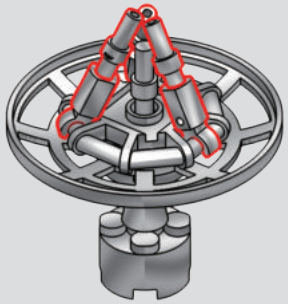

3

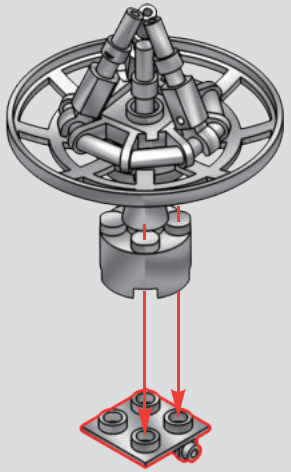

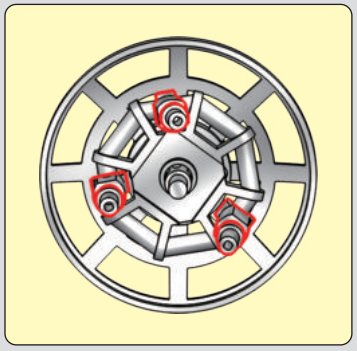

306

1

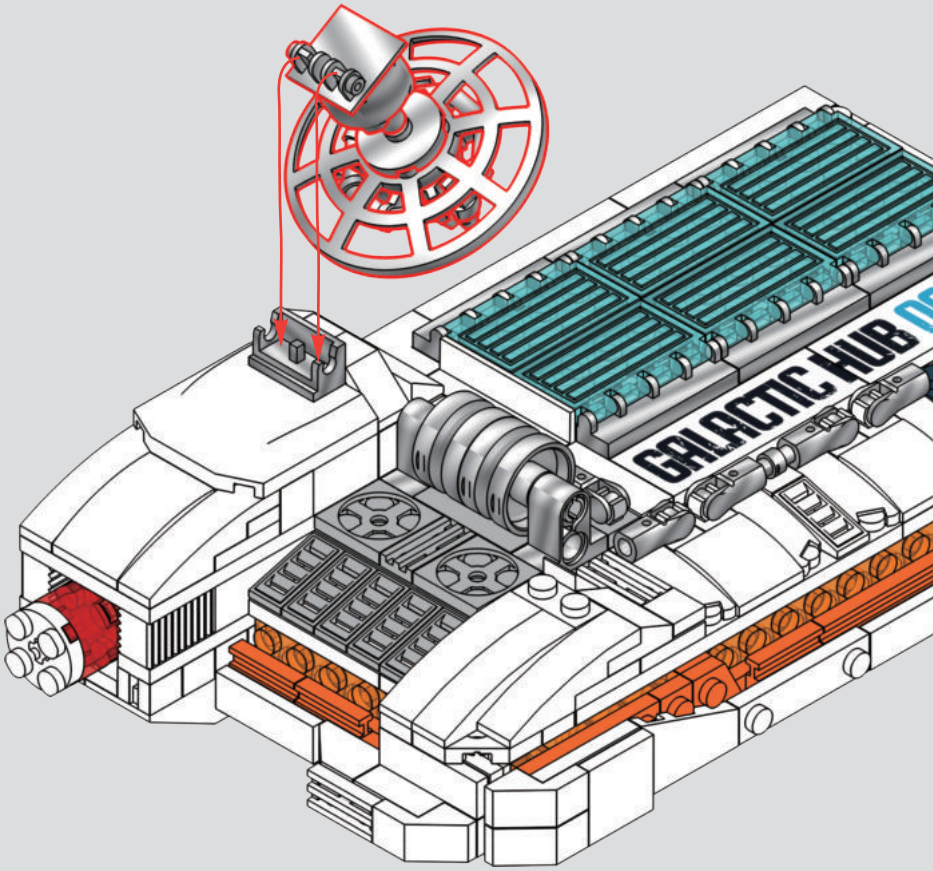

2

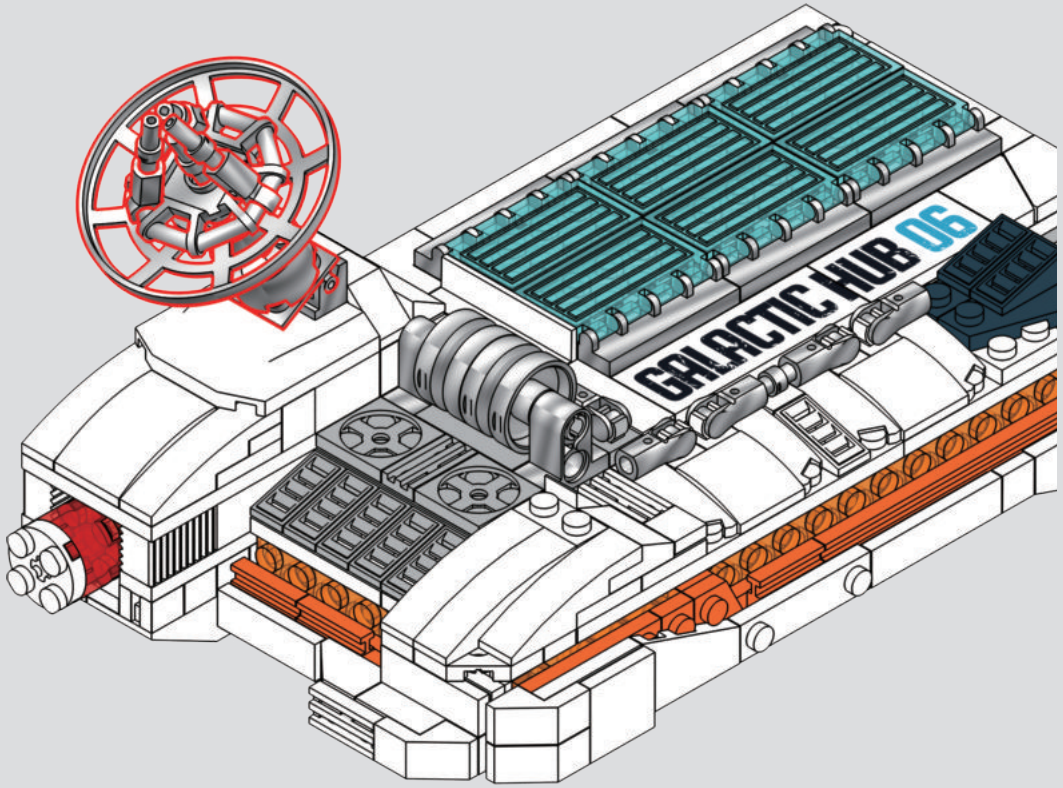

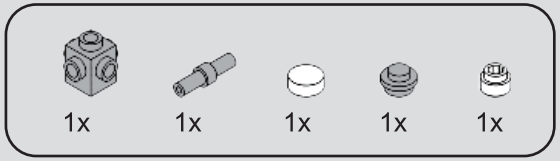

307

1



2

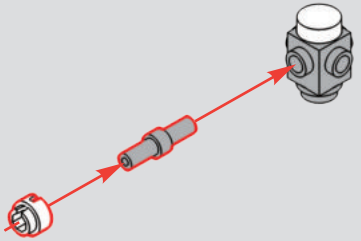

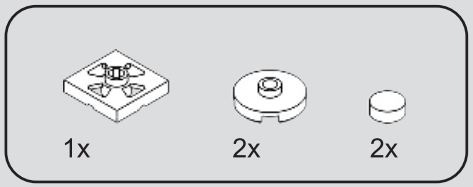

308

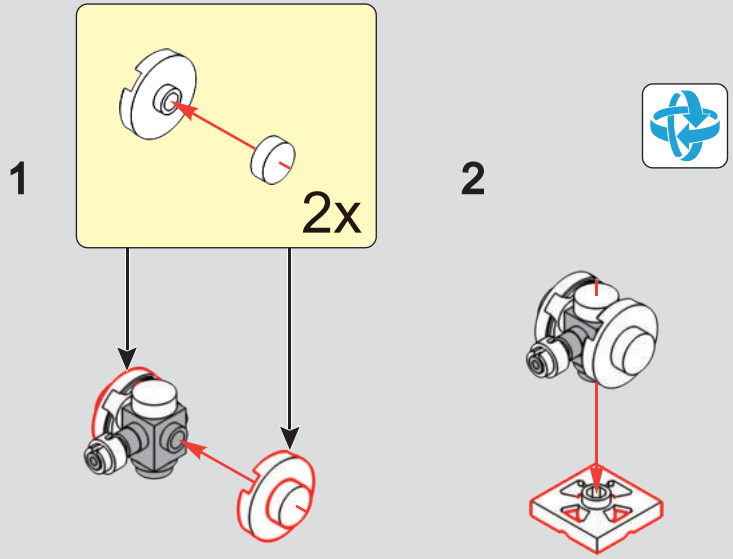

309

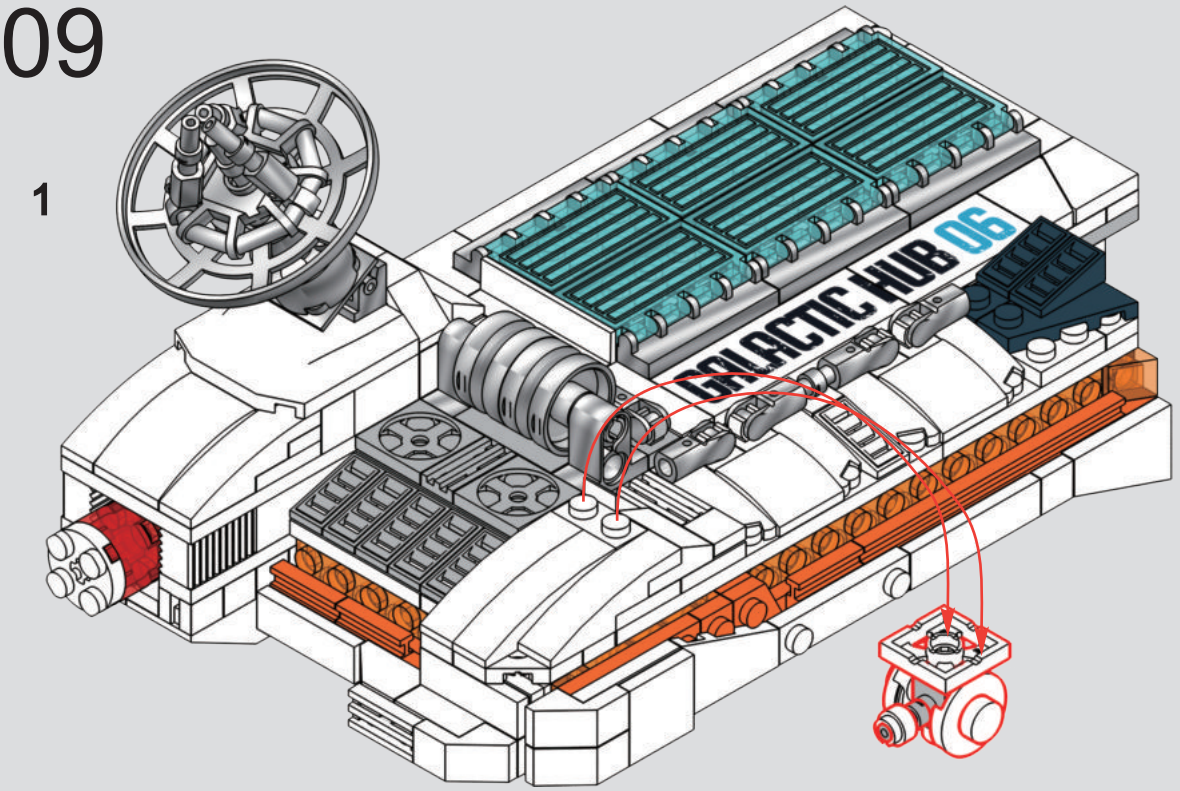

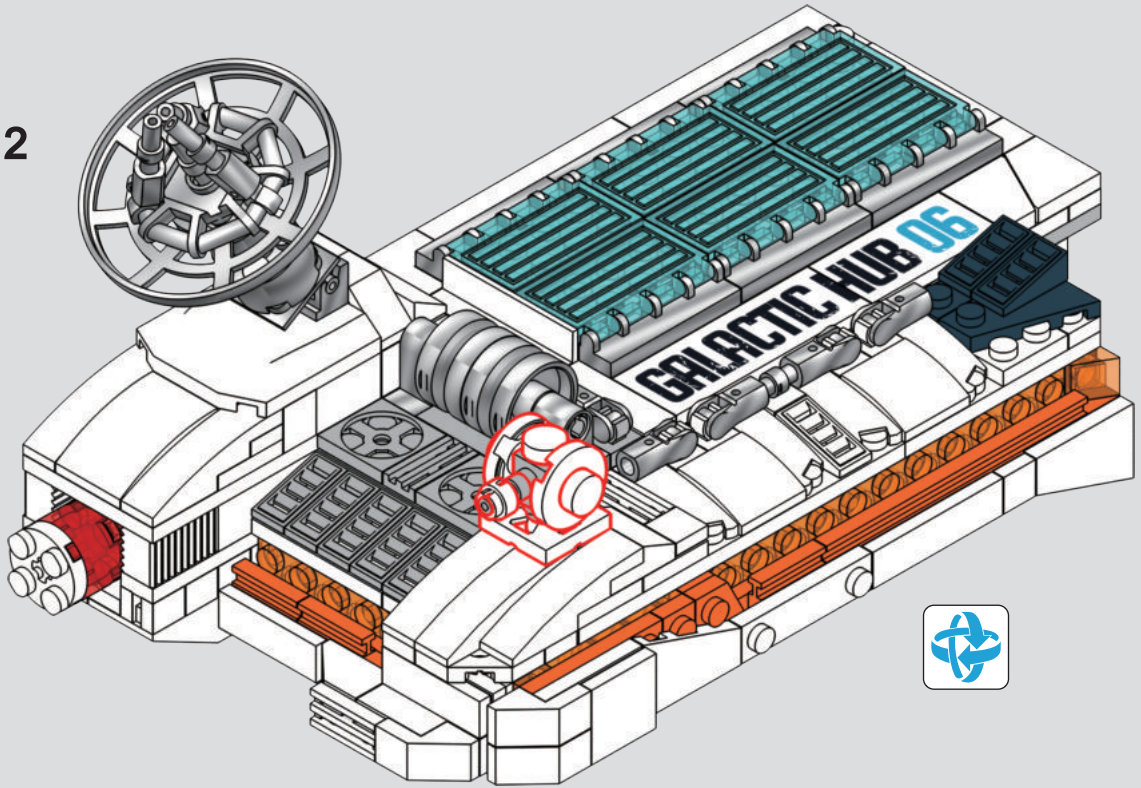

310

1

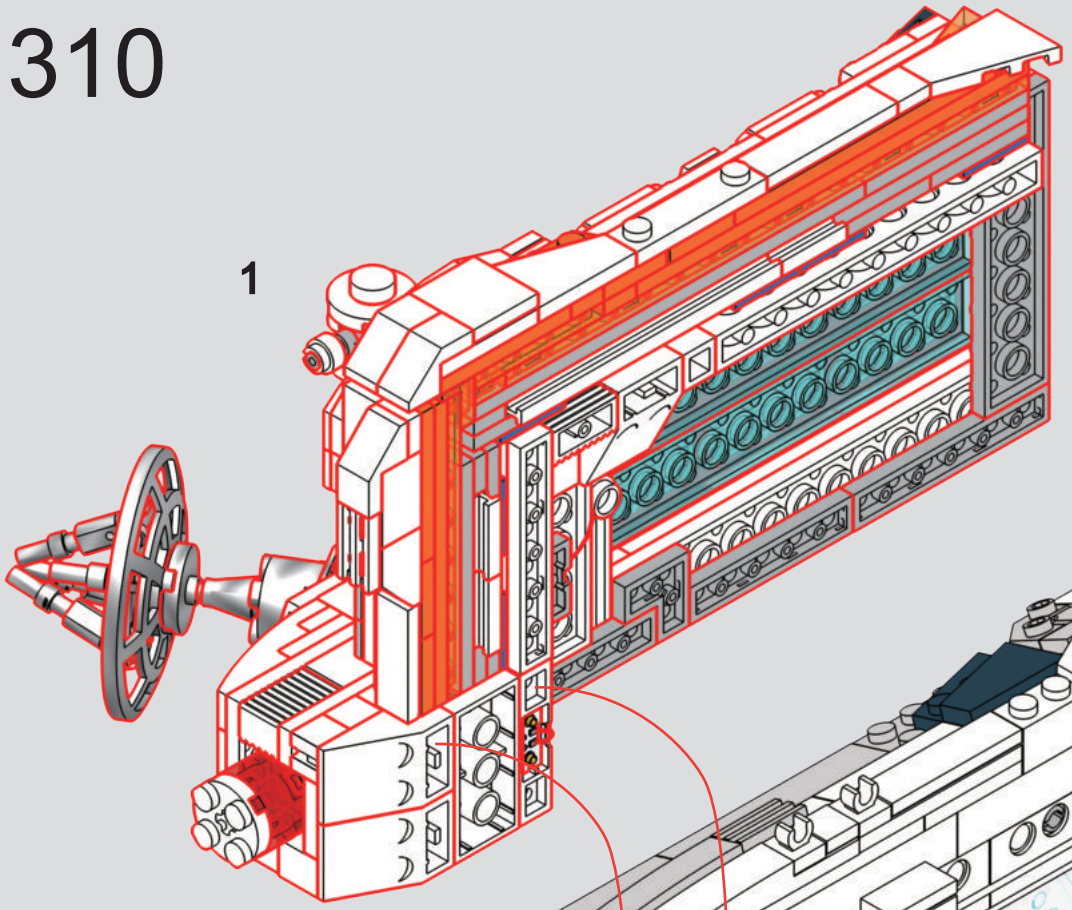

2

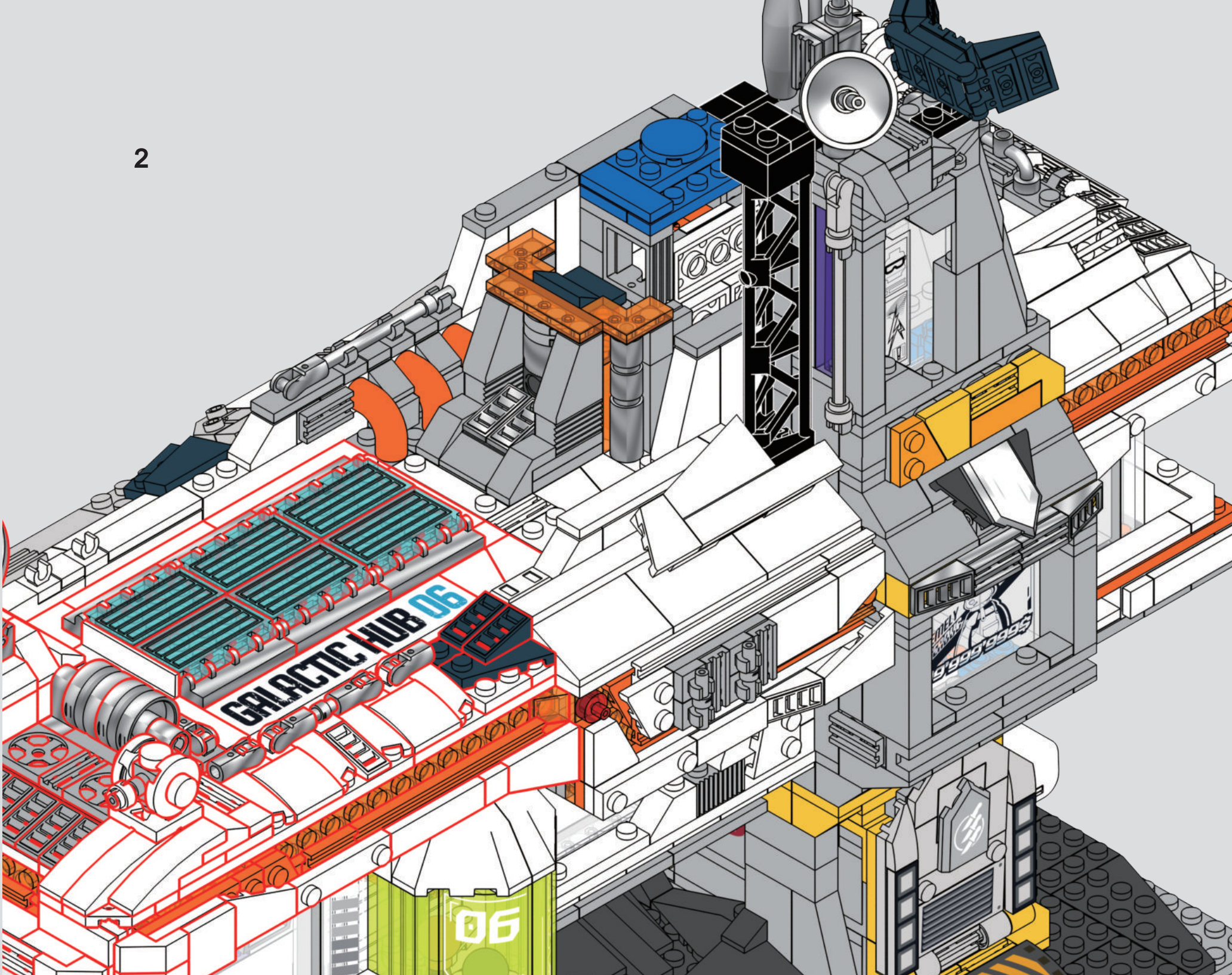


13

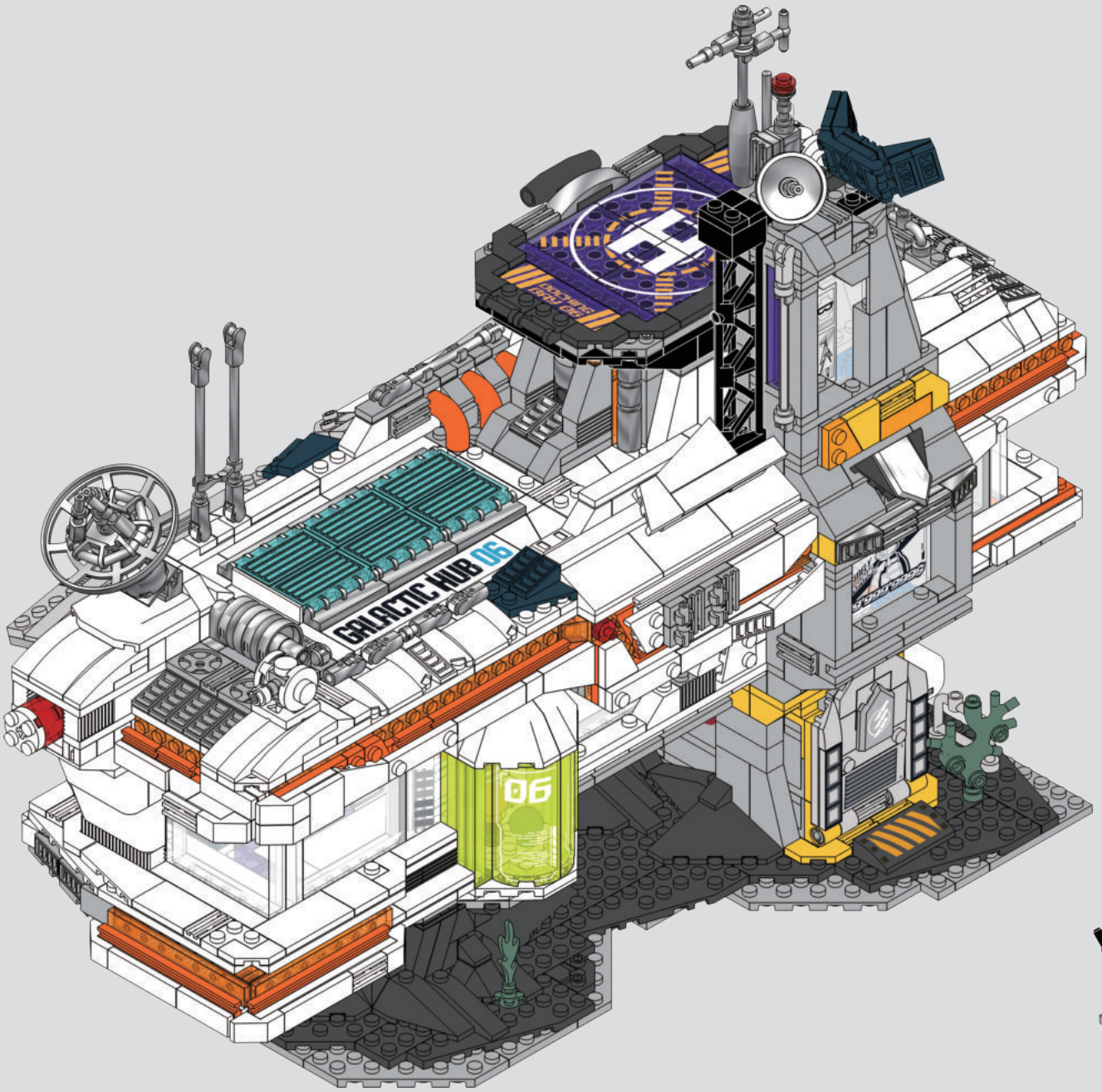
GALACTIC HUB 06
06

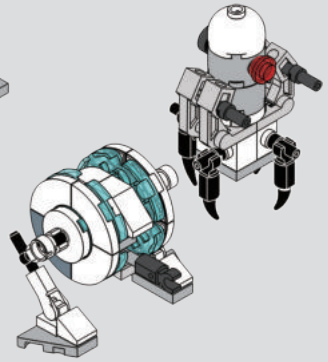

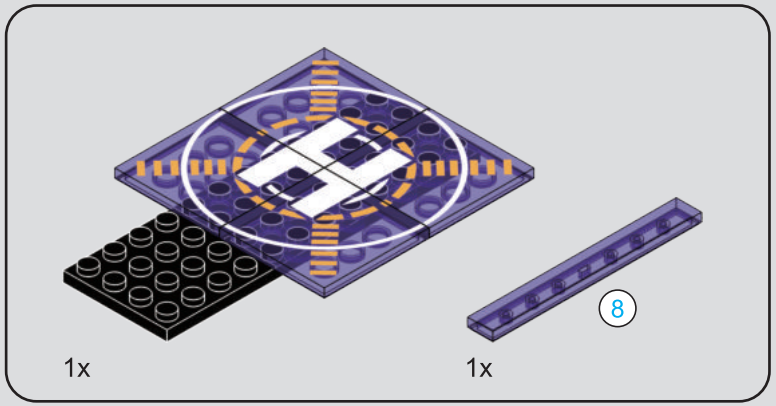

311

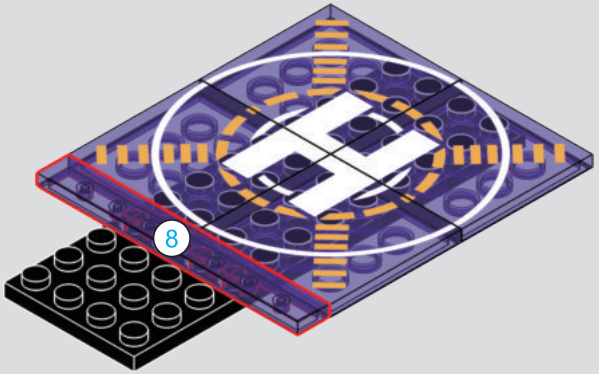

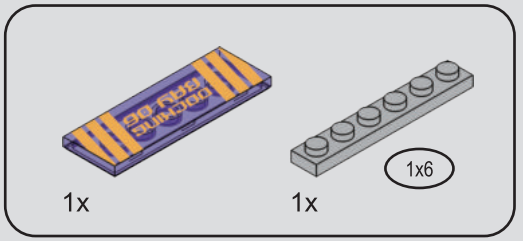

312

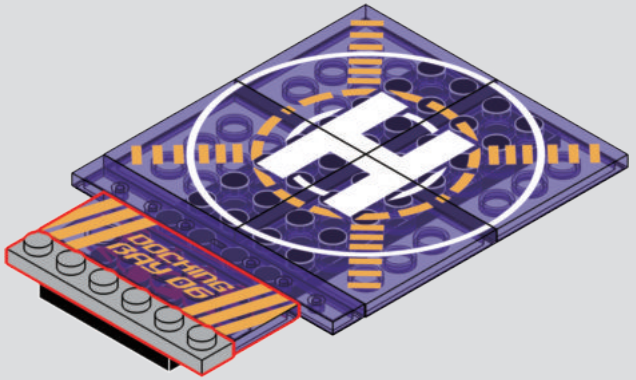



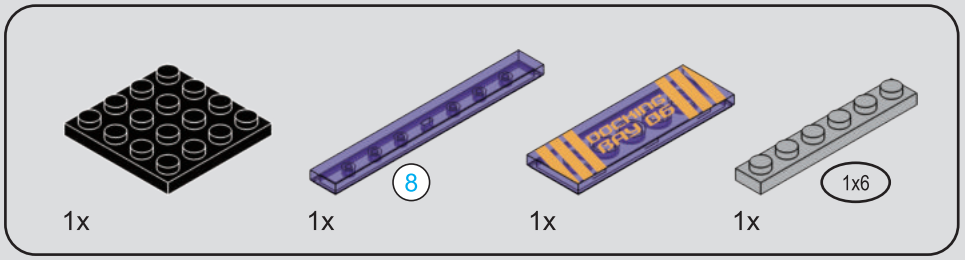

313

1

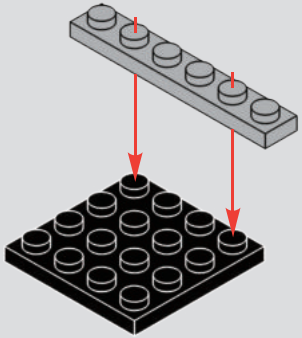

2

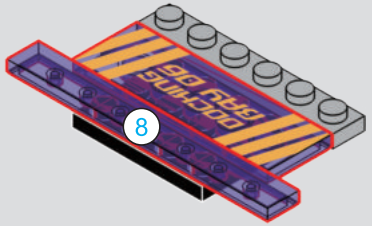



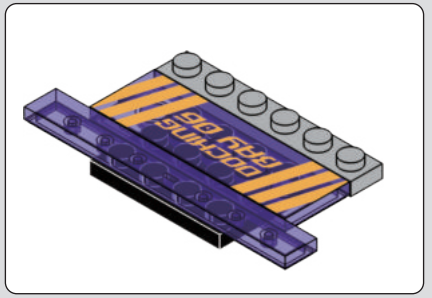

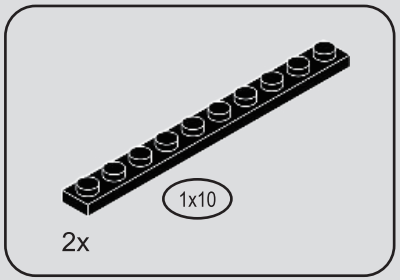

314

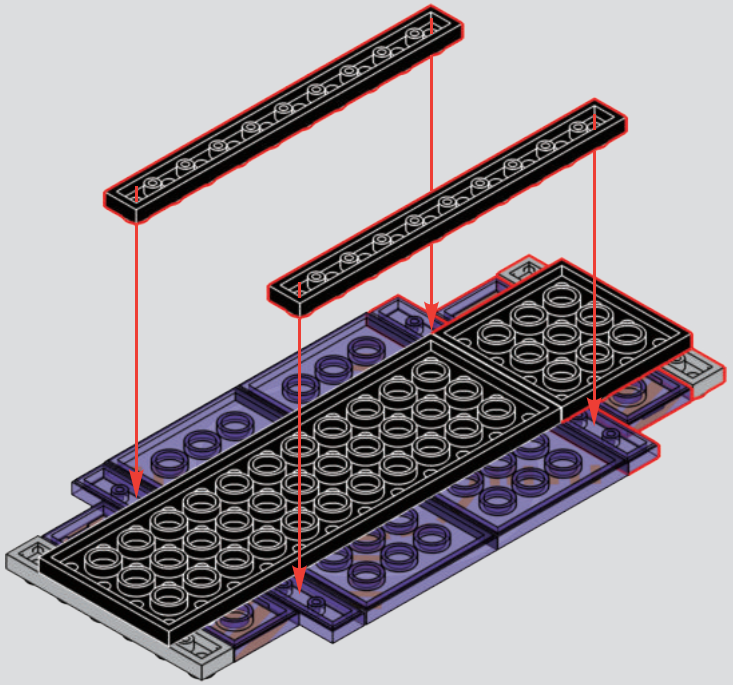

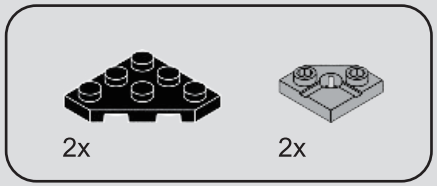

315

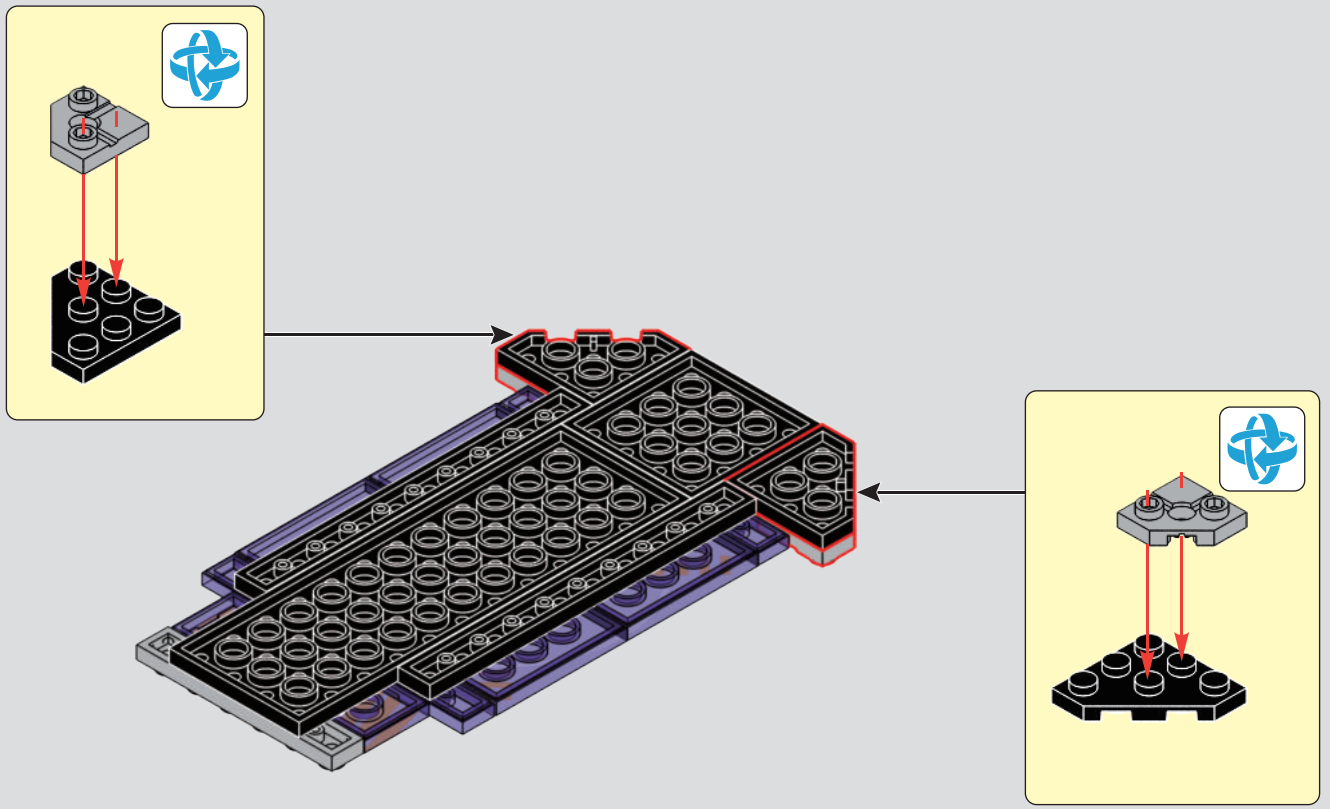

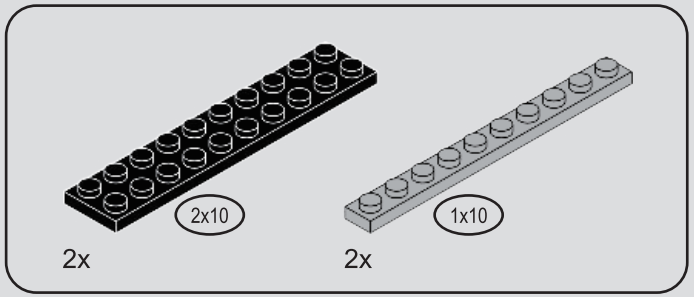

316

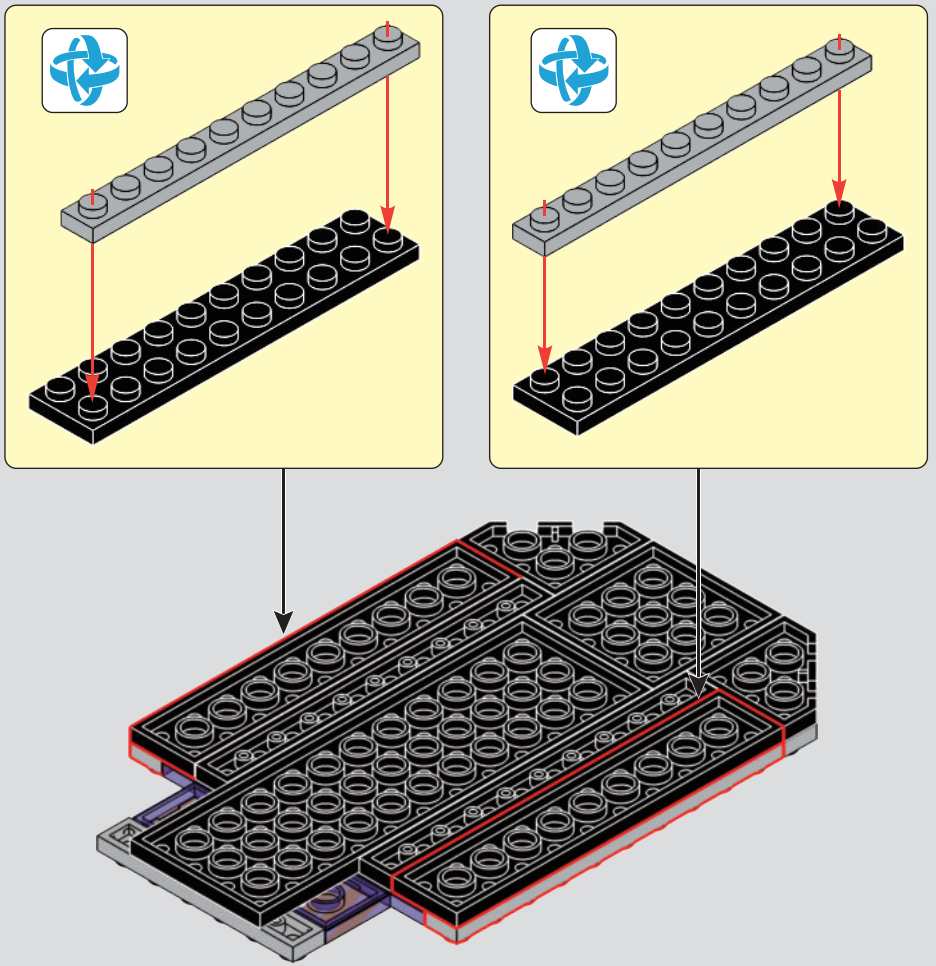

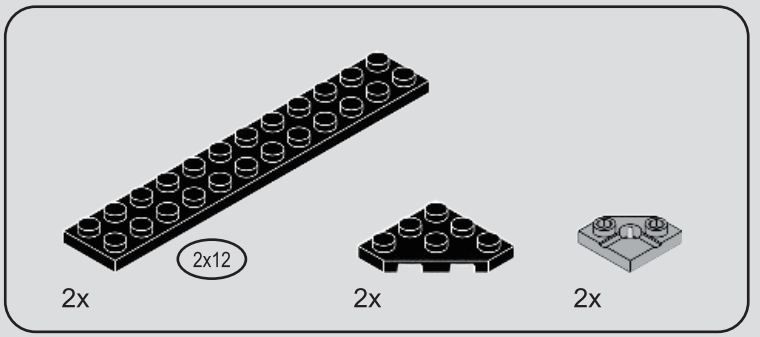

317

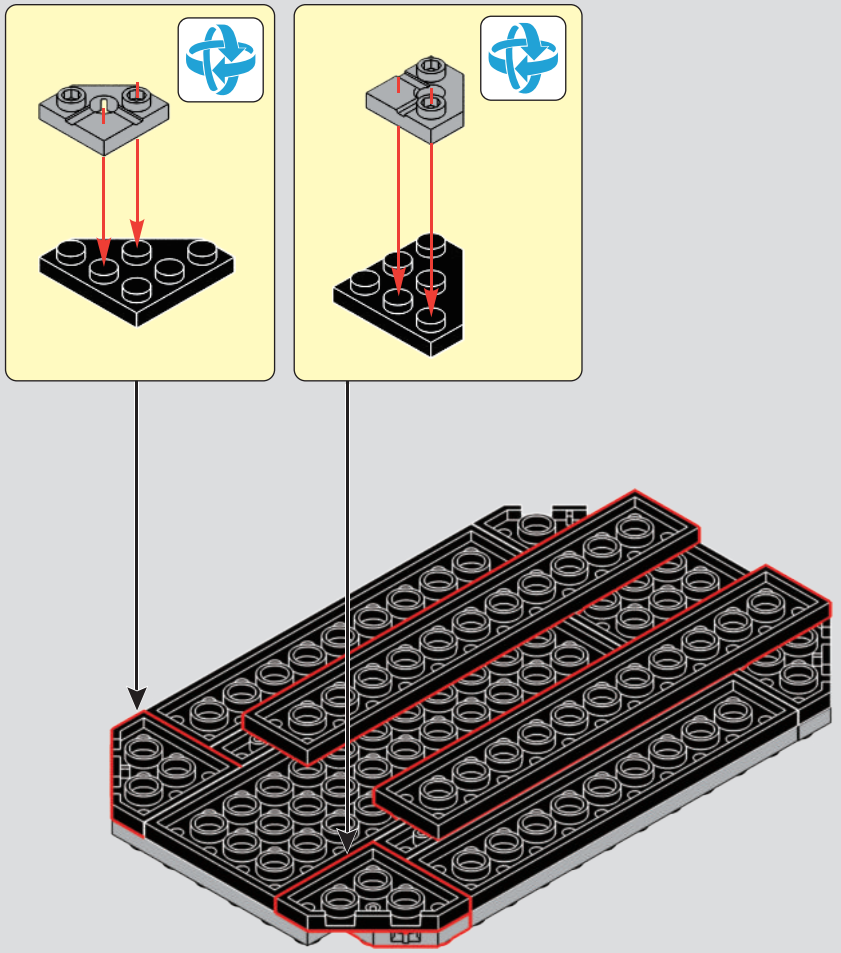

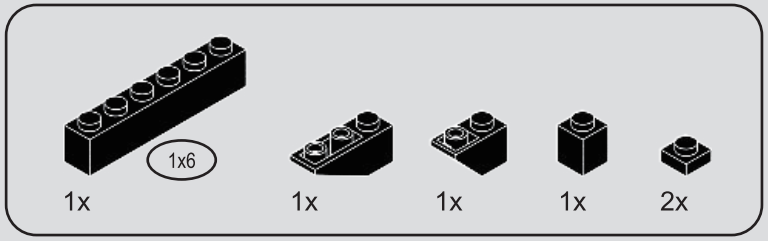

318

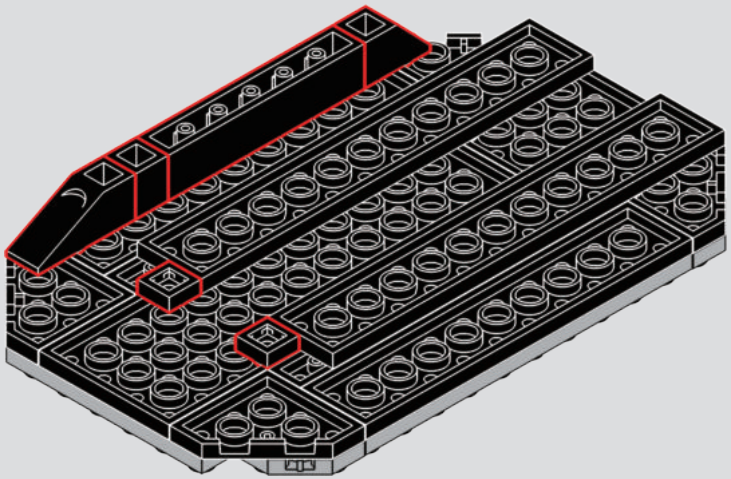

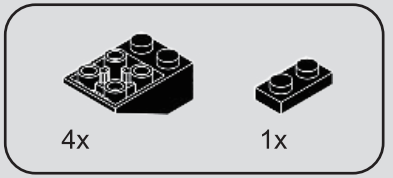

319

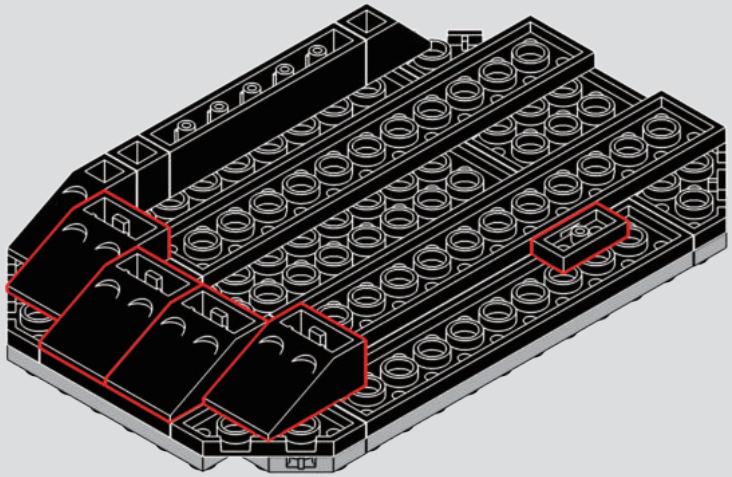

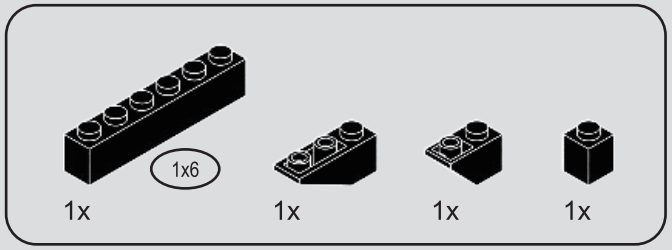

320

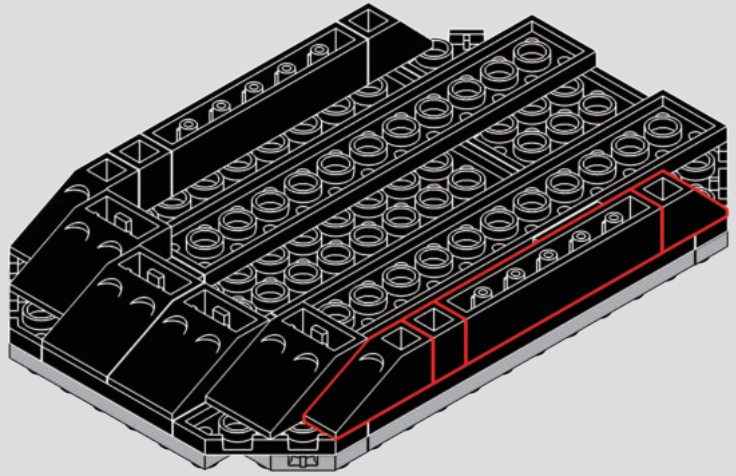

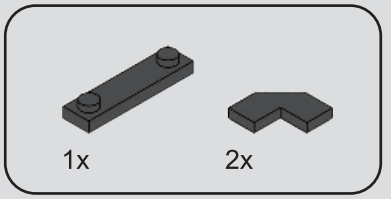

321

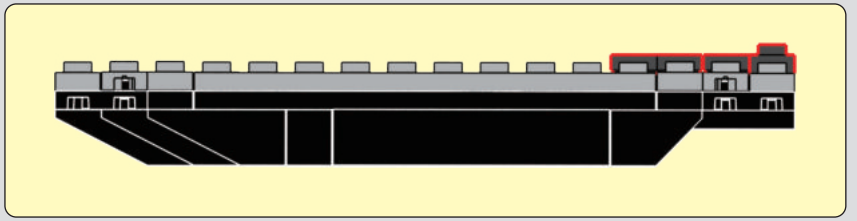

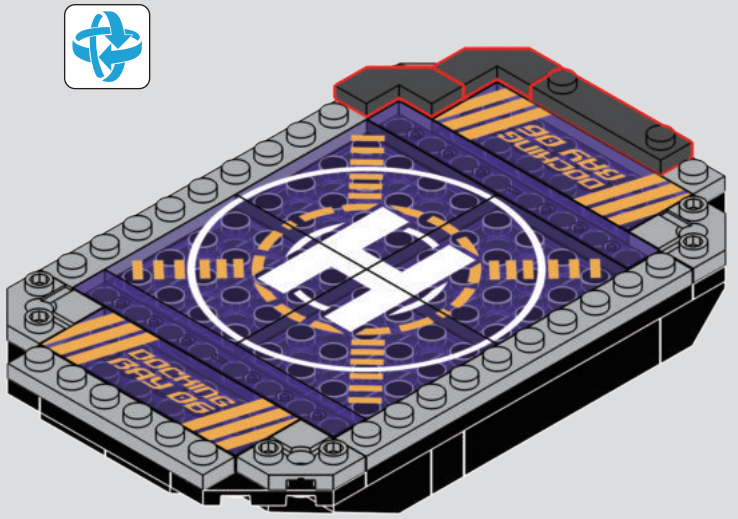

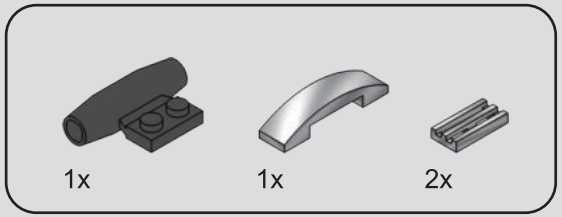

322

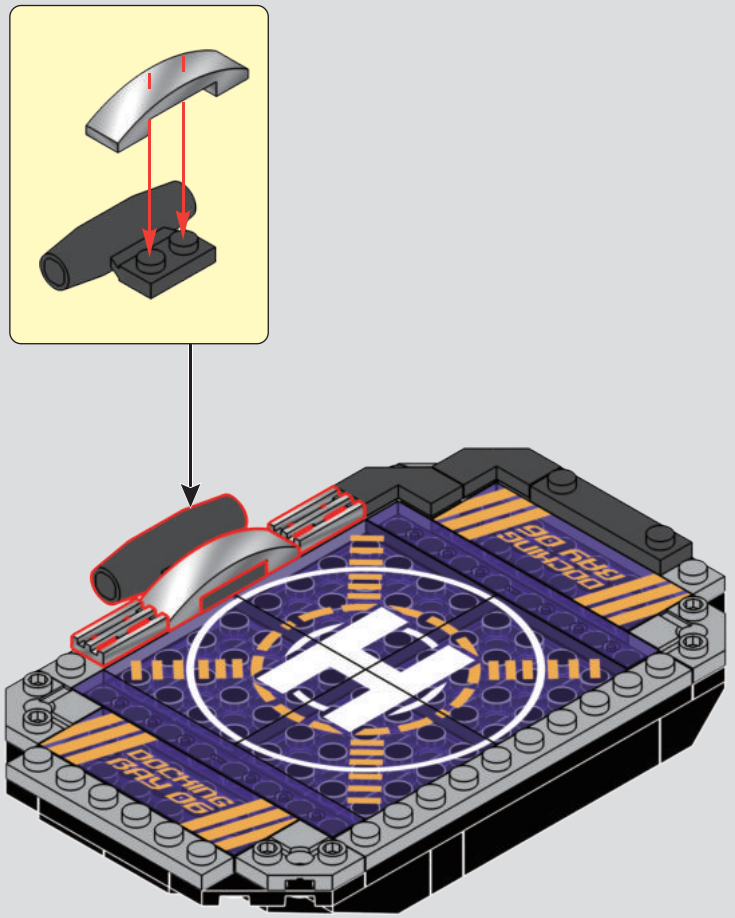

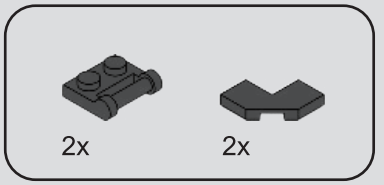

323

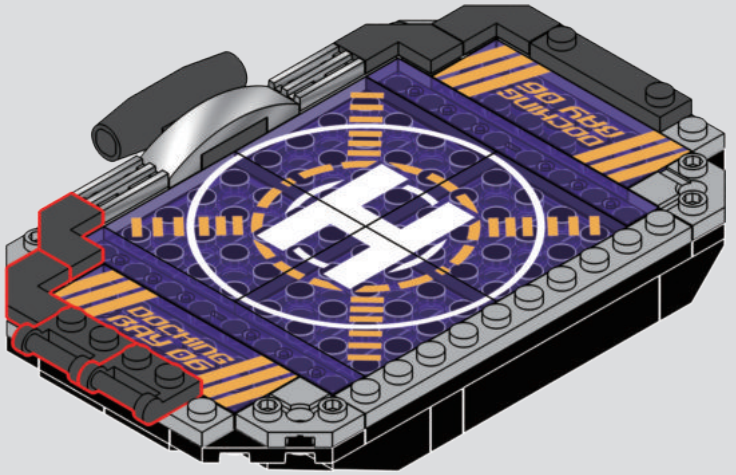

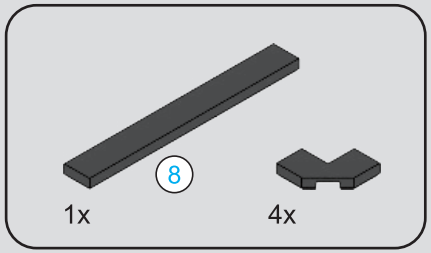



324

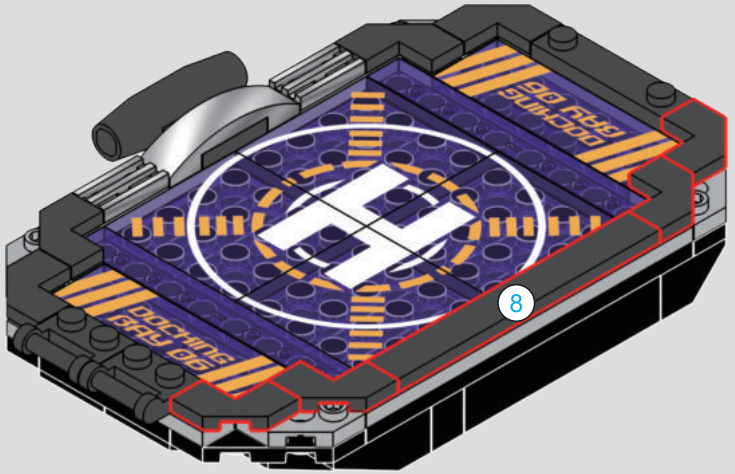

325

1

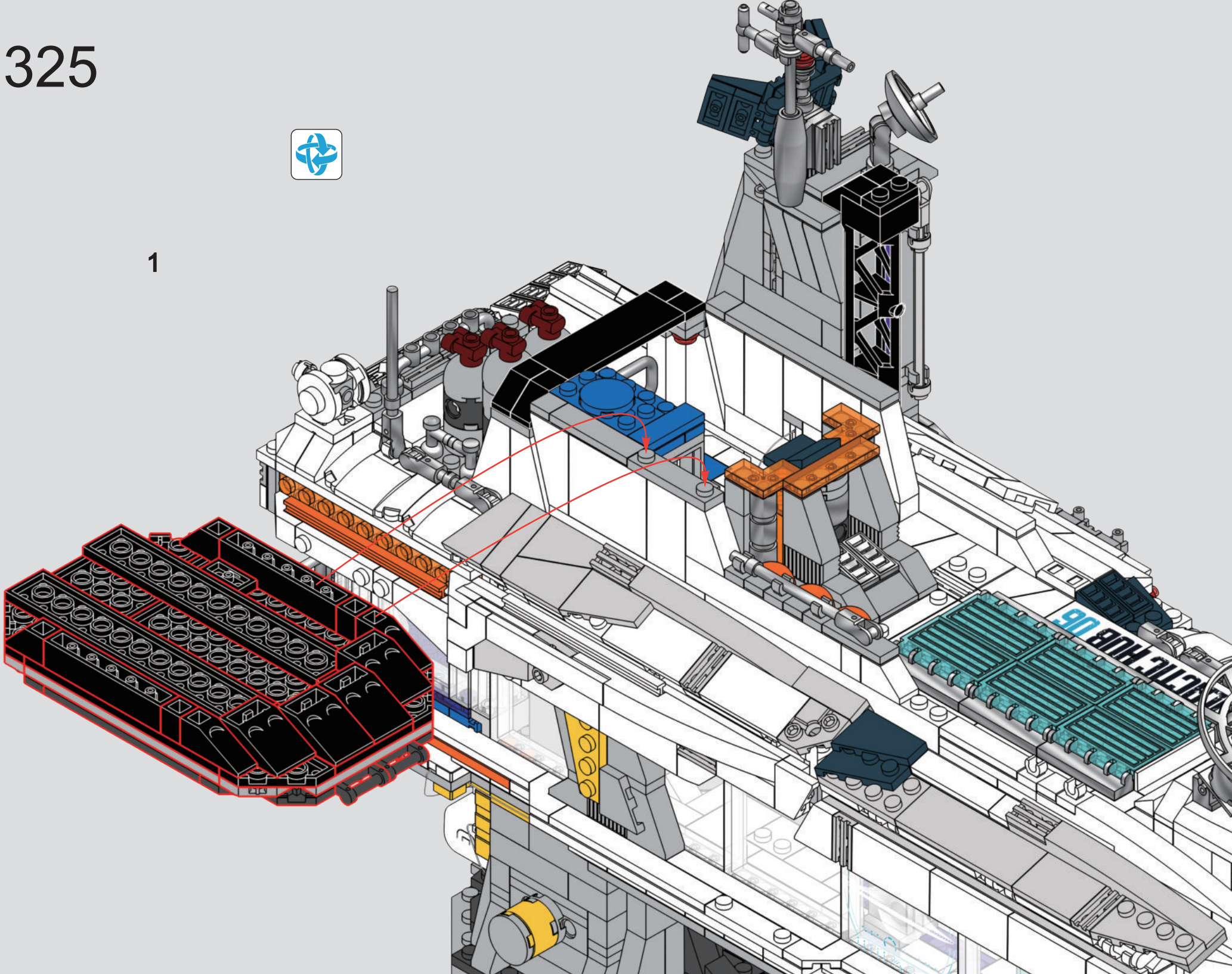

2

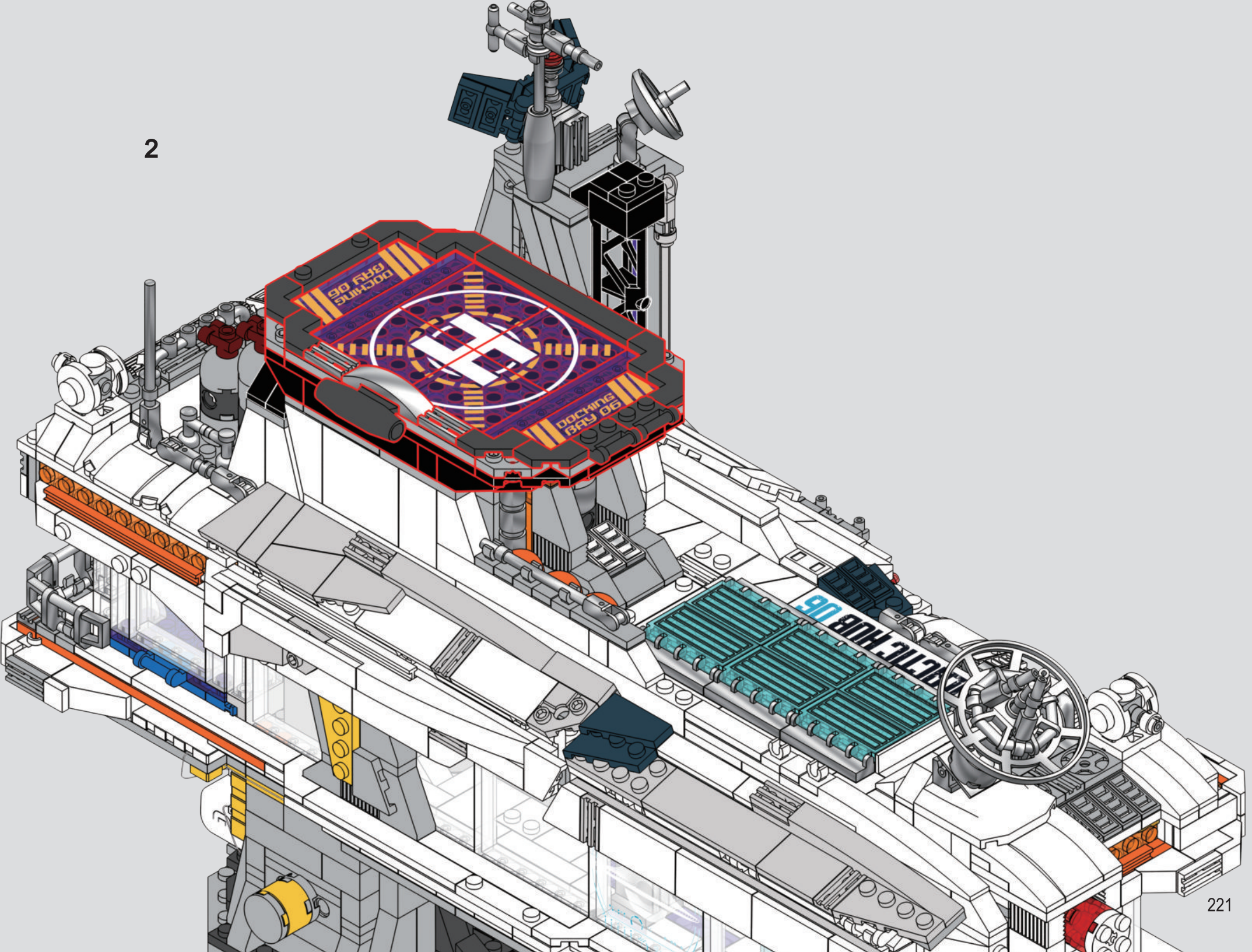

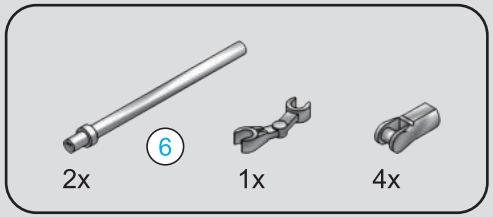

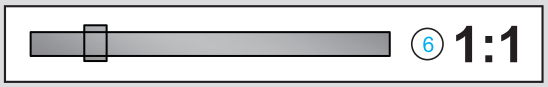

326

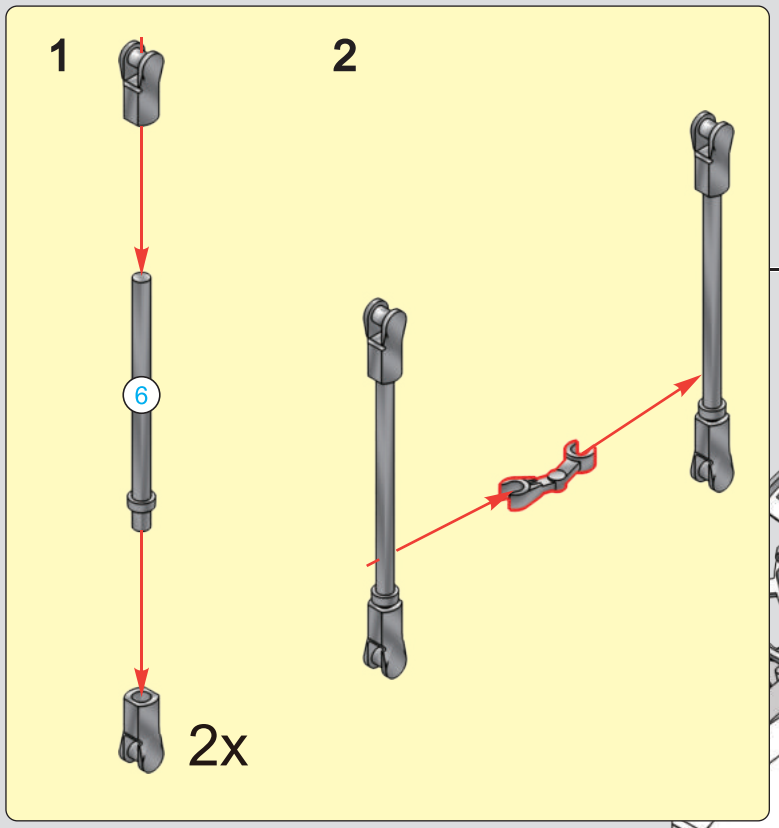

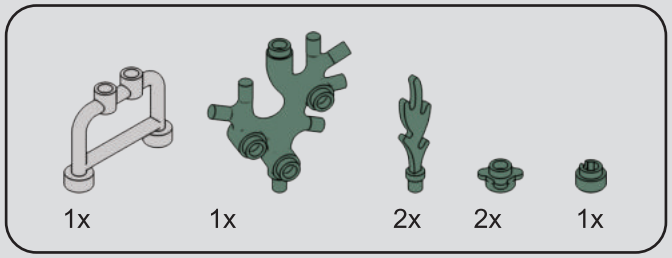

1

327

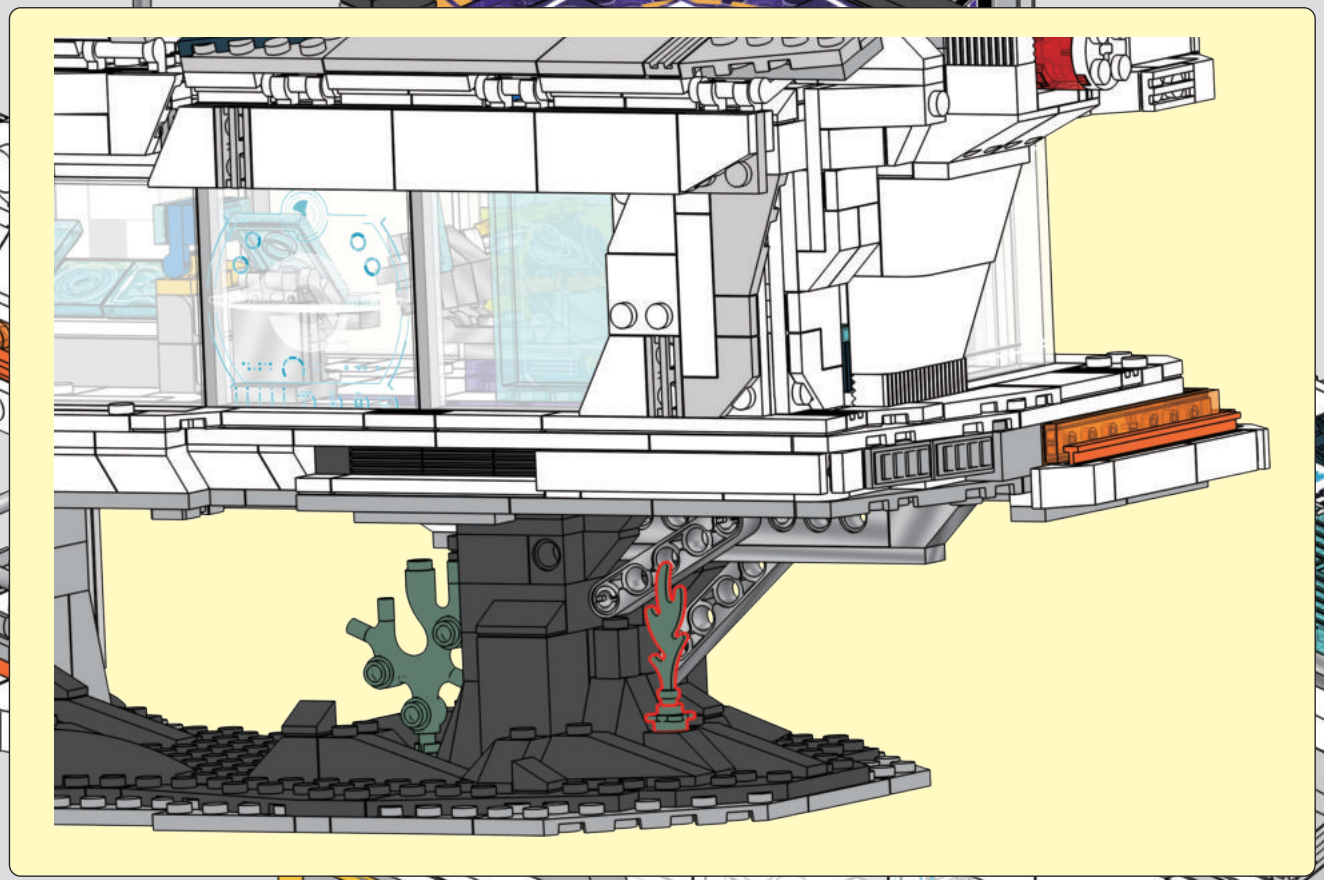

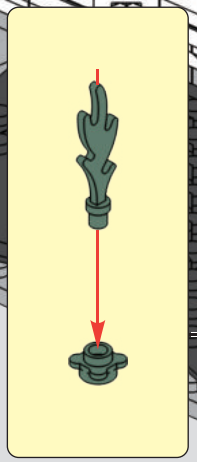

2

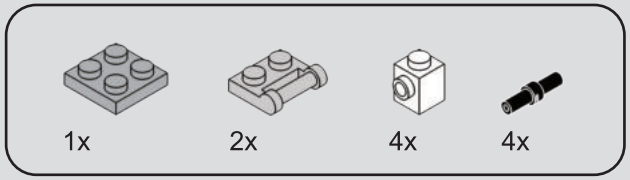

328

1

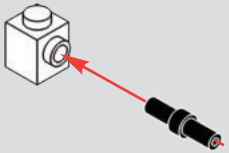

4x

2

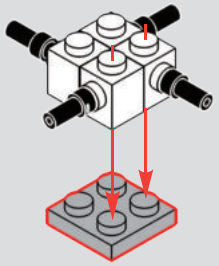

3

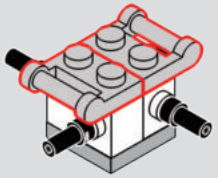

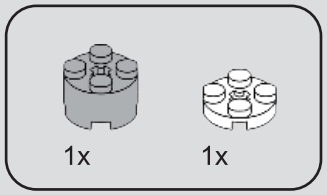

329

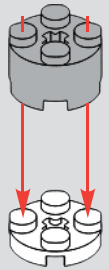

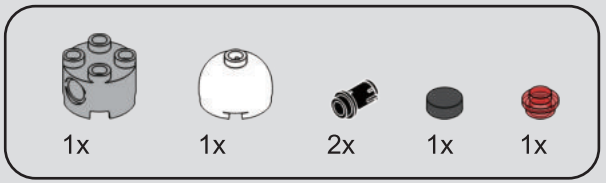

330

1

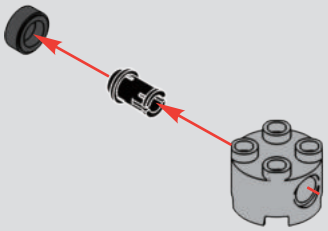

2

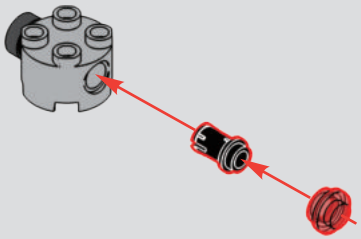

3



331

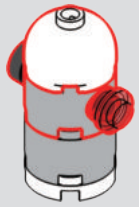

332

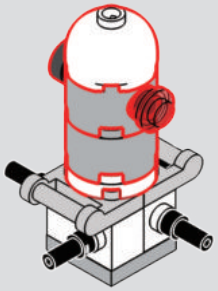

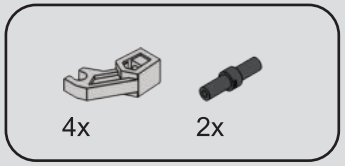

333

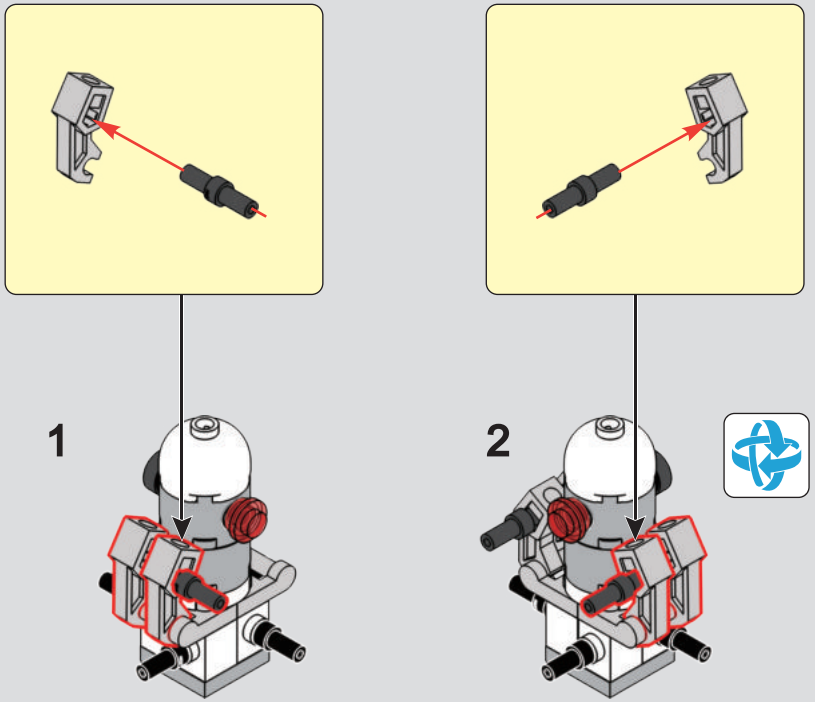

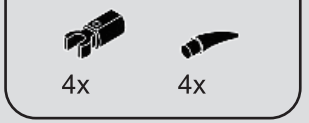

334

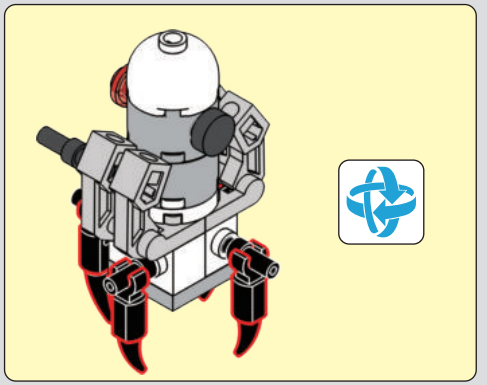

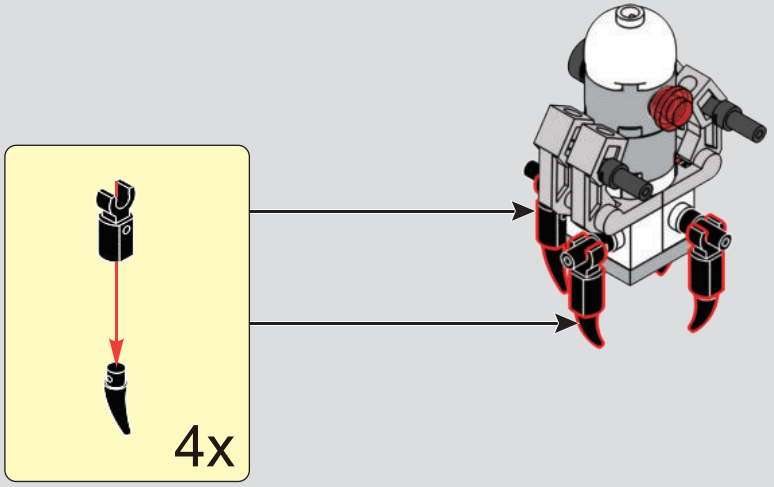

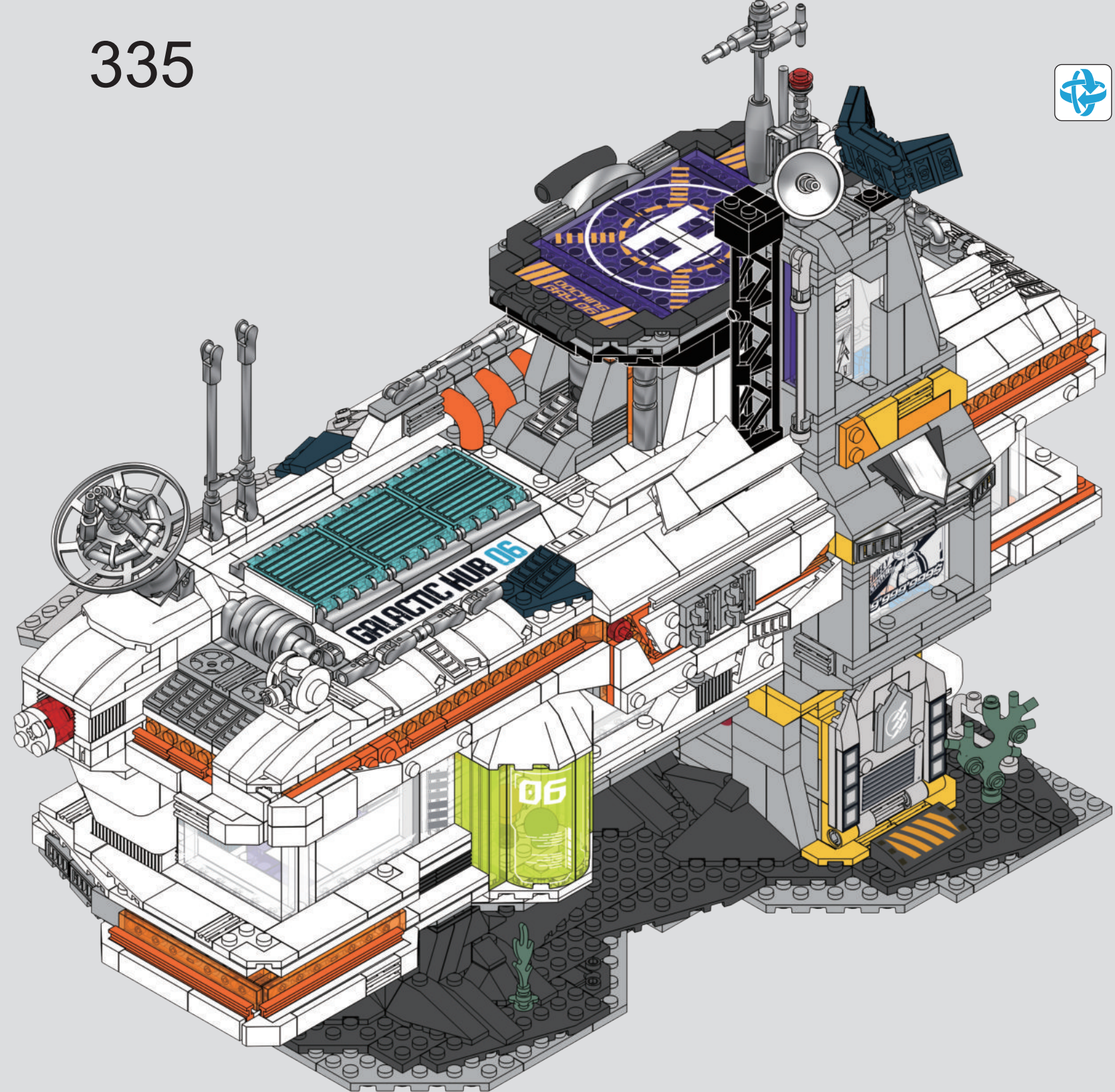
GALACTIC HUB 06
06

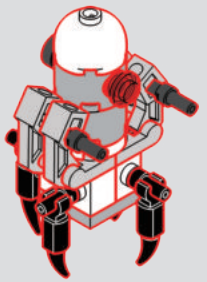

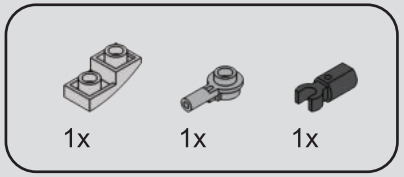

336

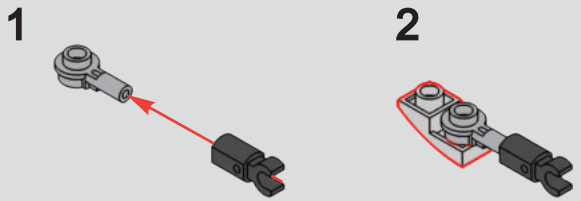

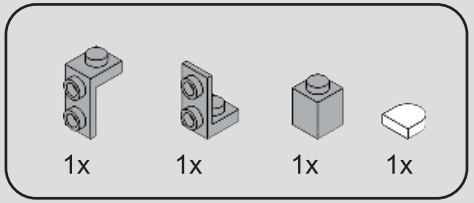

337

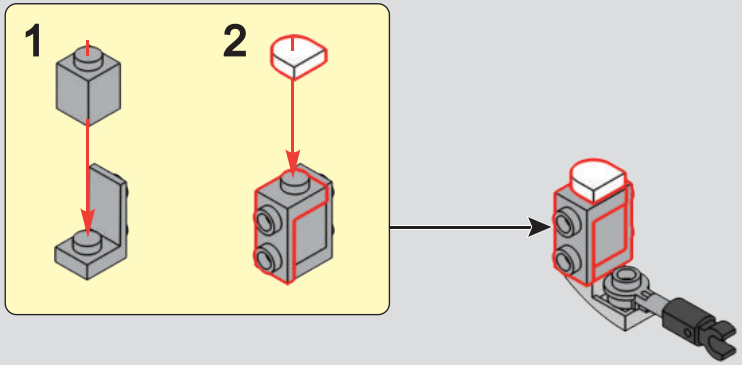

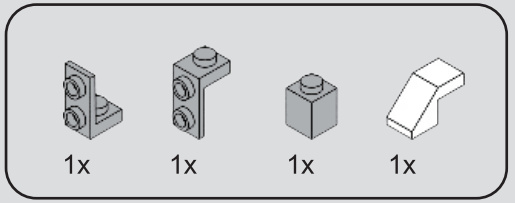

338

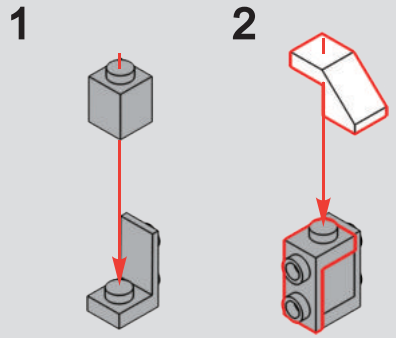

339

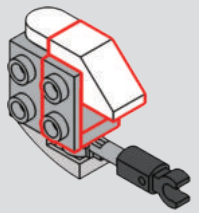

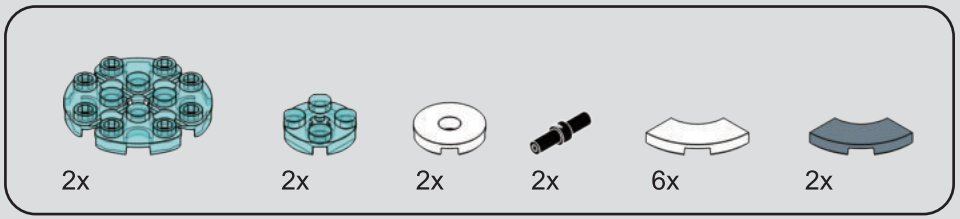

340

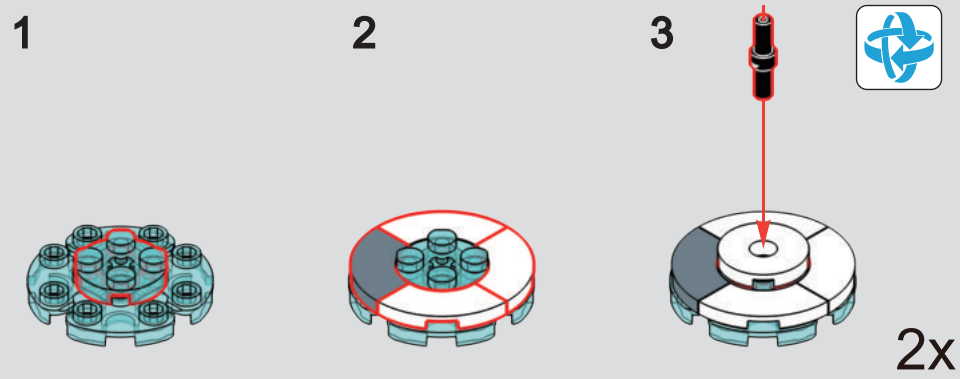

341

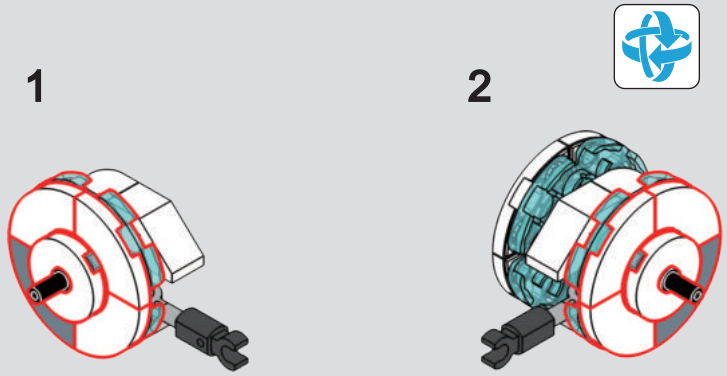

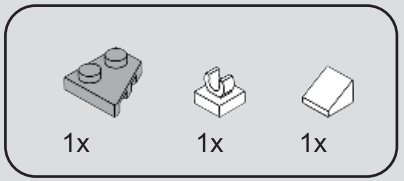

342

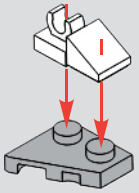

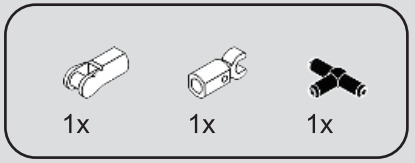

343

1



2

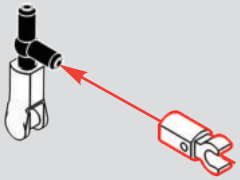

344

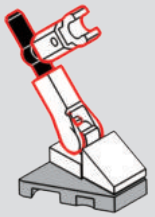

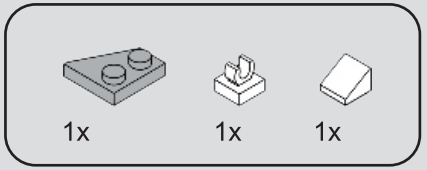

345

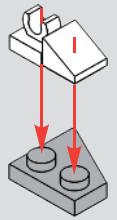

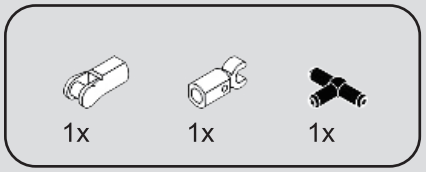

346

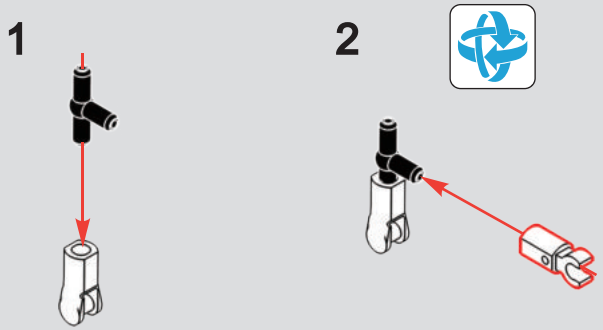

347

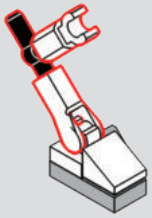



348

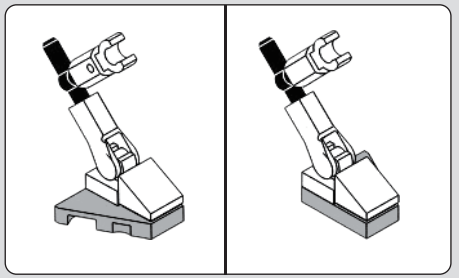

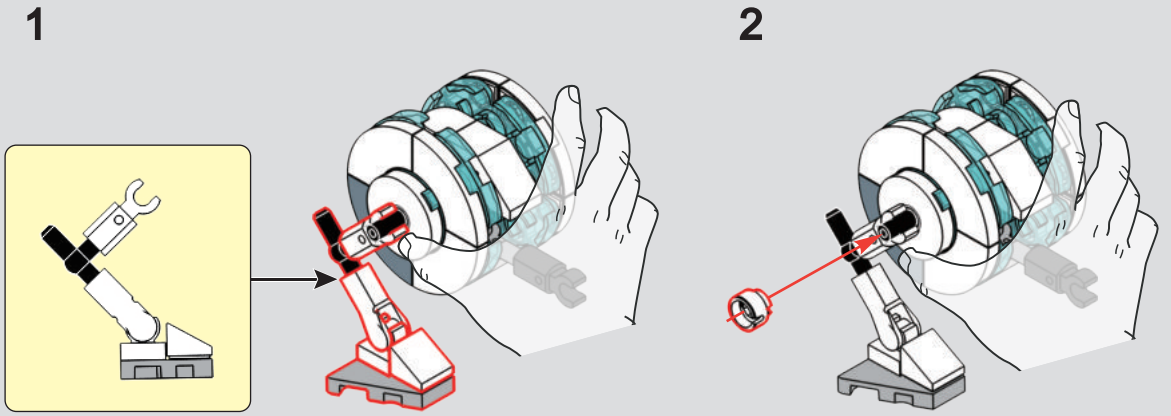

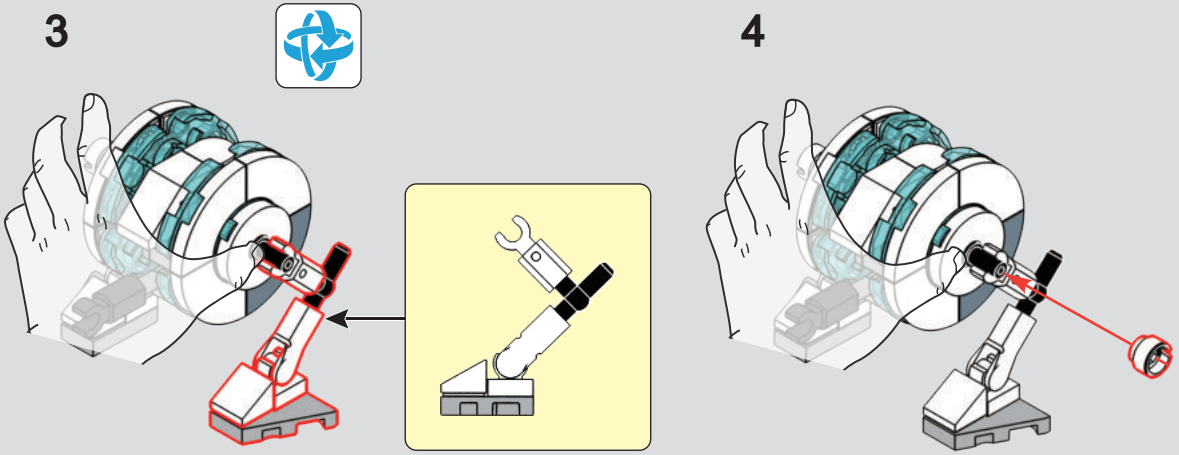

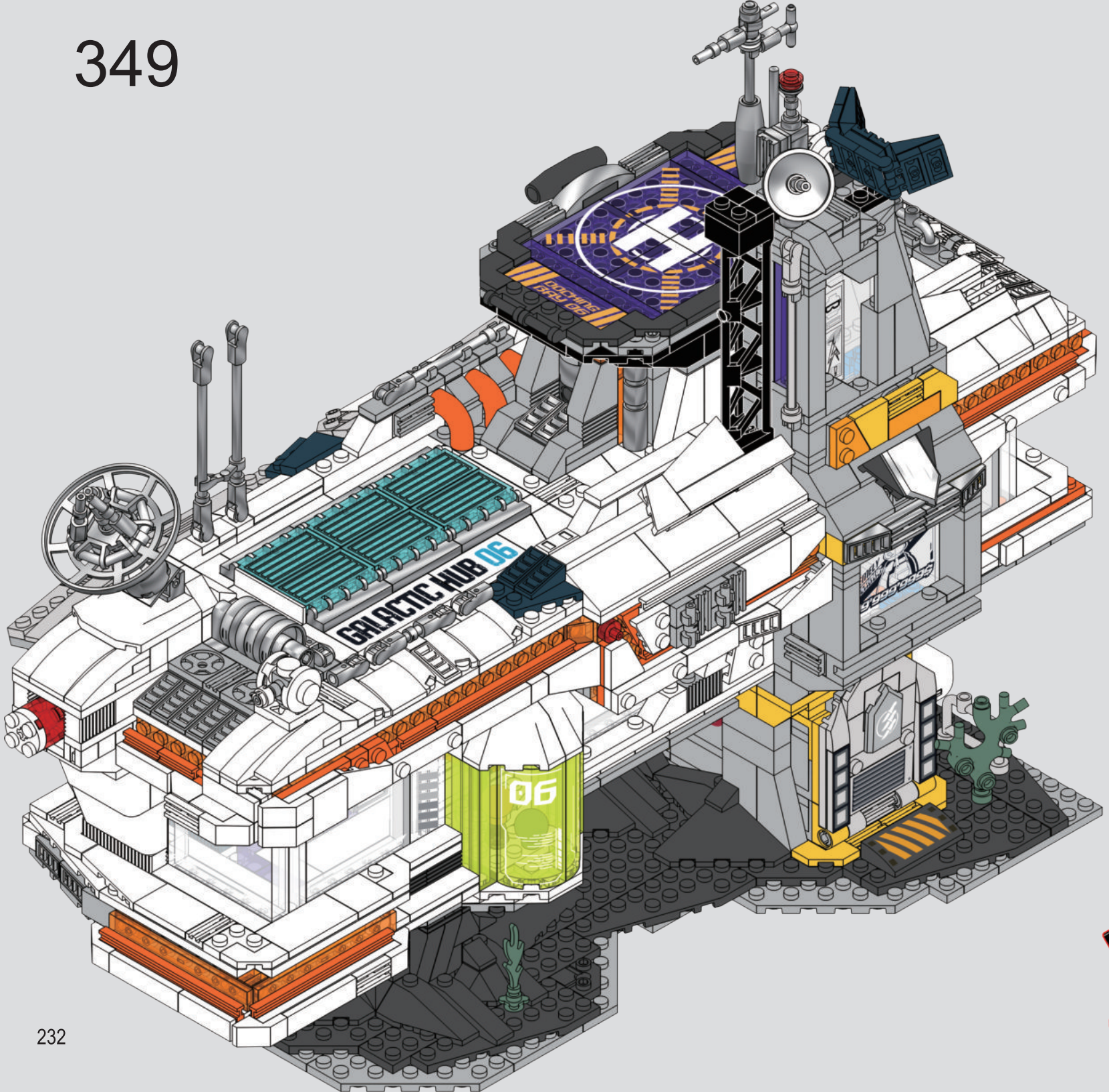
GALACTIC HUB 06
06

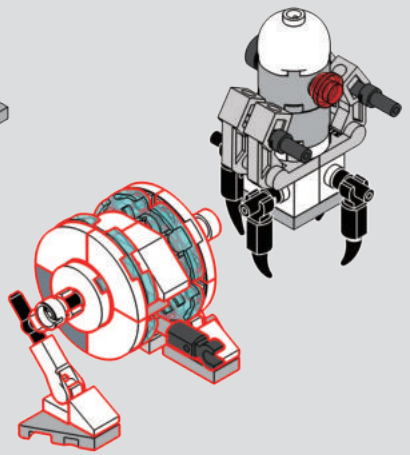

ALIEN FRONTIER

We would like your opinion on the new product you have just purchased. Your feedback will help shape the future development of this product series.
Please visit: https://www.lumibricks.com/pages/feedback
We sincerely hope you enjoy the product and we can't wait to see you again soon.Please let us know if we can do anything else to help!

太空系列

感谢您对本系列产品的喜爱与支持，如您在拼搭过程中遇到任何问题，均可通过微信扫描二维码联系企微客服寻求协助。
如果您还有其他意见或者建议，也请务必通过企微客服告知我们，期待与您的再次相遇！

企微客服



• CYBERPUNK NEONCITY/赛博朋克系列

F9043
Police Patrol Car
巡逻警车



F9042
Apartment
公寓楼



F9060
Future Bus
未来巴士车



F9073
Izakaya
后巷居酒屋



• RETRO HOUSE/复古房屋系列



L9083
Waterfall Cabin
瀑布小屋



L9075
Bamboo House
竹林小屋



F9035
Moutain Cabin
山地小屋



F9018
Hunting Cabin
狩猎小屋

• STEAMPUNK WORLD/蒸汽朋克系列



F9067
Steampunk
Motorcycle Pursuit
蒸汽朋克摩托追捕



F9070
Steampunk Watch Tower
观测塔



F9050
Steampunk Flying Club
蒸汽朋克飞行俱乐部



F9007
Steampunk Train Station
蒸汽朋克火车站

• TOWN LIFE/小镇生活系列



F9033
Antique Store
收藏品商店



F9031
Book Cafe
咖啡书屋



F9056
Balcony Theatre
流光剧院



F9078
Artisan Gelato Studio
冰淇淋商店

Lumibricks and Lumibricks logo are trademarks of the Lumibricks group.

WWW.LUMIBRICKS.COM

如果您遇到任何问题，请通过以下方式与我们联系：

天猫 小红书

lumibricks灯搭官方旗舰店

会员中心