F.O
DELIGHT
DAY AND NIGHT
F9042
APARTMENT
2507PCS
16+
NEON EATS
CYBERPUNK
NEONCITY
Scan the QR code
for a PDF instruction

ABOUT FUNWHOLE

'FUNWHOLE' is a combination of the words "fun" and "whole", meaning "the whole fun of both day and night".

Founded in 2014, based on the desire to fully express the whole beauty of bricks (in day and night), FUNWHOLE is the world's first lighting bricks manufacturer.

FUNWHOLE is dedicated to the lighting bricks product, with a combination of bricks and lights. FUNWHOLE was birthed out of lights and bricks, allowing lights shine through your bricks and bring your night bricks to life.

As the pioneer to bring the first lighting bricks, FUNWHOLE was created to bring back brightness to the night world, making day and night whole with the lighting fun.

Engaged in building a creative brand, brick by brick, light by light, FUNWHOLE strives to bring fun and joy to millions of people.

FUNWHOLE creates more than bricks but also makes the lights shine through bricks, hoping every building brick lover can enjoy the beauty of lighting!

OASIS
APARTMENT
DELICIOUS
FOOD

POLICE
POLICE

INSPIRATION

The product draws inspiration from American-style apartment buildings, integrating advanced near-future technology. Its exterior presents a retro aesthetic while its details and components exhibit a modern high-tech feel, embodying the clash between nostalgia and future in a street-level civilian structure—apartment. The product centers around the apartment building, depicting the stories of the surrounding environment and the building itself. Stories include backgrounds such as the plaza in front of the building, a secretive fried chicken joint, a hacker's haven, and a mechanical arm engineer, revealing intricate connections between them.

In this cyberpunk setting characterized by the collision of technology and backwardness, order and chaos, the cyber apartments feature:
Designs like trim and light strips symbolizing technology and order, including a bio-research tank on the third floor, a cybernetic doctor's lab, and negative-pressure doors in hacker rooms.
Elements representing backwardness and chaos such as underground surgical tables, littered garbage bags on street corners, damaged roads, and chaotic pipelines.

This product, through its unique design and narrative backdrop, offers a new interpretation of cyberpunk themes, showcasing imaginative future technology and engaging with the complexity of its environment.

Rex:
Rex is a mysterious figure who doubles as both the owner of a fried chicken shop and an underground doctor. By day, he runs a small eatery known as "Oil & Chicken Skin," while at night, he operates a clandestine medical clinic in his residence, performing limb replacements and offering anonymous treatments. Additionally, he excels as a motorcycle repair expert, making him indispensable and enigmatic within the city.

Keira:
There's a mechanic named Keira in this world. No one knows where she learned her exceptional crafting skills from, nor does anyone know who buys all the prosthetics she makes. Of course, Keira doesn't care. She's solely focused on her work, blending technology and artistry to create new mechanical limbs for those in need.

Max:
In this cyber world, there's a cyber lunatic named Max. His chip account seems to have been hacked, leaving him penniless. In moments of despair, he often kicks the vending machine, though it never dispenses any drinks.

Mark:
There's a male hacker known as Mark. He sits in his studio, fingers flying over the keyboard, eyes fixed on a single monitor. Hacking into others' chips is child's play for him as he efficiently maneuvers computers, mastering various cybersecurity techniques from cracking passwords to breaching firewalls. Mark is revered in the hacker community for his unparalleled skills and technical prowess, making him a shining star in the virtual realm.

Jack:
In this bustling city, there's an ordinary citizen named Jack. He relies on the bus for his daily commute, but its punctuality isn't always reliable. Sometimes, Jack finds himself facing the possibility of being late. Despite this, he remains optimistic and patient, navigating through these small challenges of urban life.

Amy:
There's an ordinary citizen named Amy who frequents the fried chicken shop by the station. Today, with fewer customers around, she has the chance to chat with the owner.

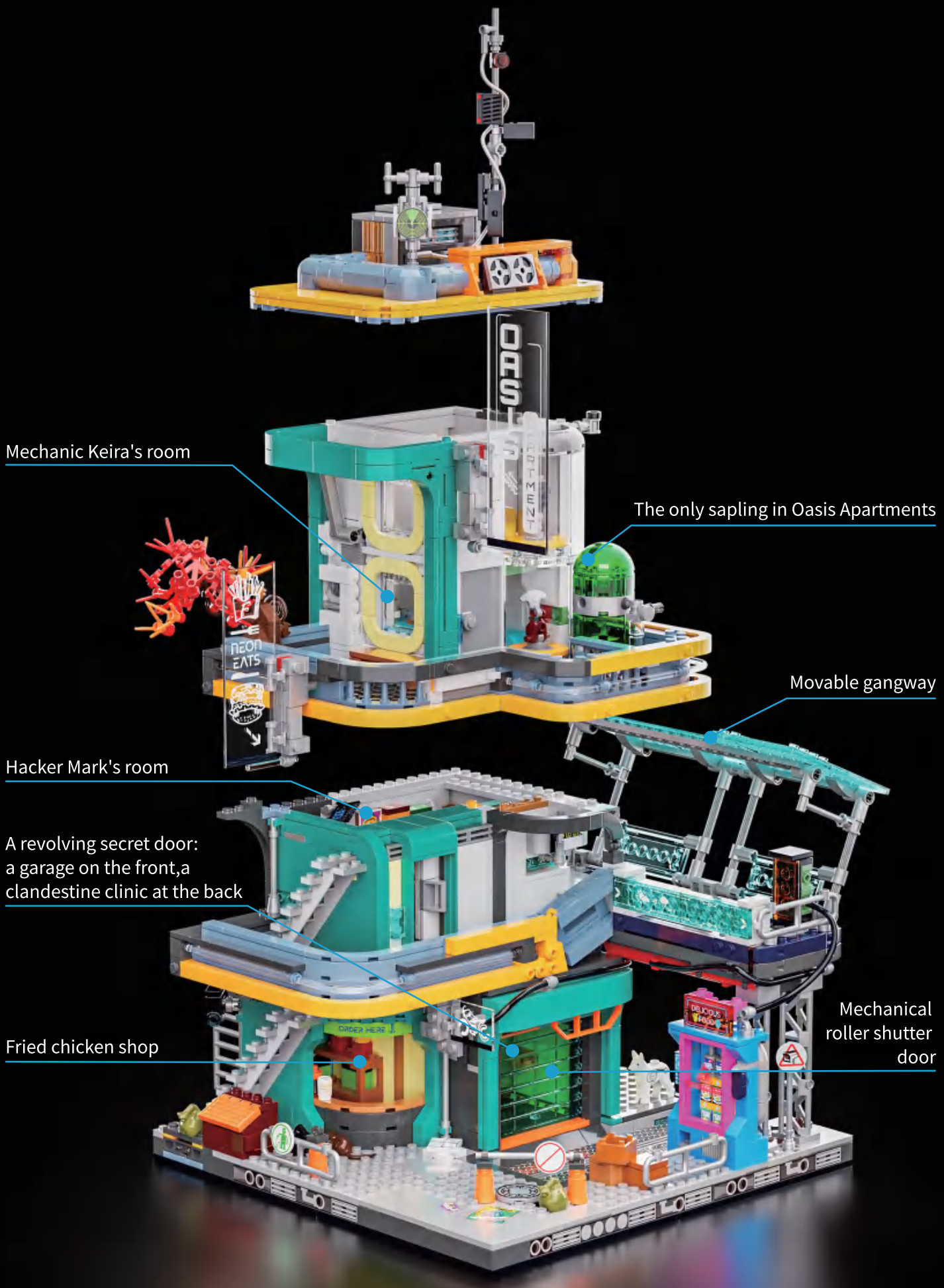
Mechanic Keira's room
The only sapling in Oasis Apartments
Movable gangway
Hacker Mark's room
A revolving secret door:
a garage on the front,a
clandestine clinic at the back
Mechanical
roller shutter
door
Fried chicken shop

6
9:35

WHAT'S INCLUDED

Please check and make sure you get all the items listed below.

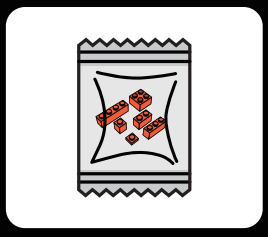

Building Bricks

LED Light Kit

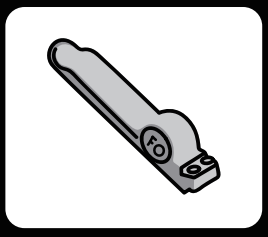

Brick Separator

User Manual

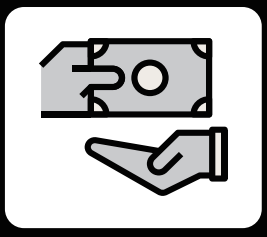

Service Card

TROUBLESHOOTING

The small size of lighting accessories makes them susceptible to damage during installation, and the following issues are common causes of failure.

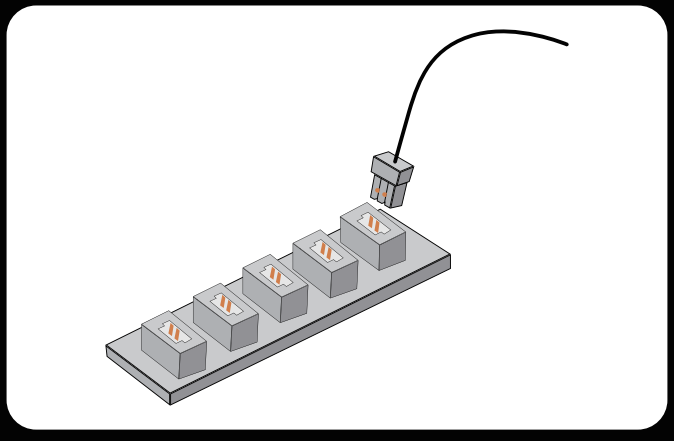

1.Ensure that the connectors are correctly installed as shown in the picture.

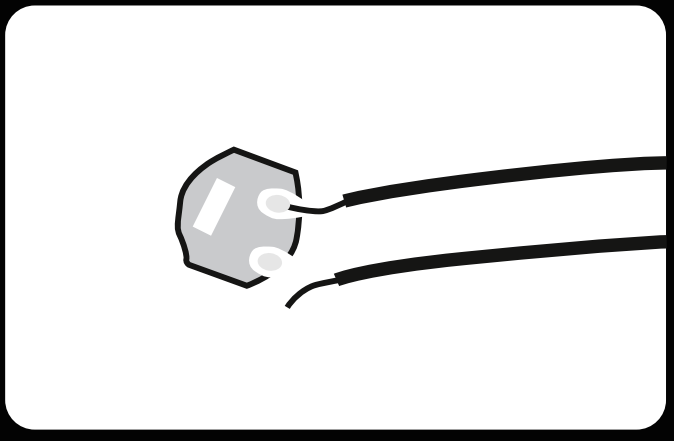

2.Check if the wires are disconnected or broken from the solder joints.

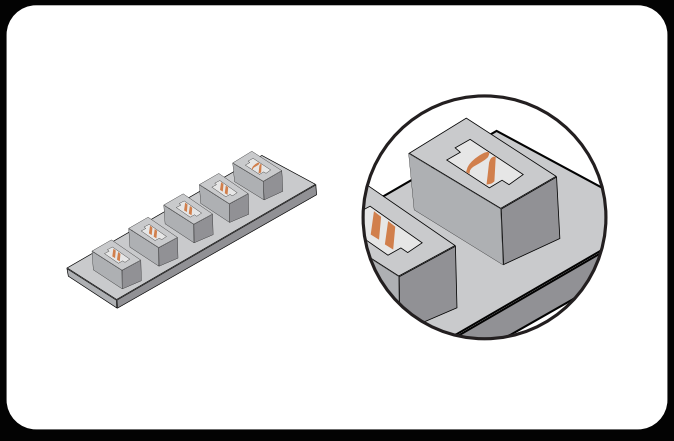

3.Check the internal pins of the connector sockets. The internal pins of a properly working connector port should be straight. If the small pins are bent, they may be considered faulty ports.

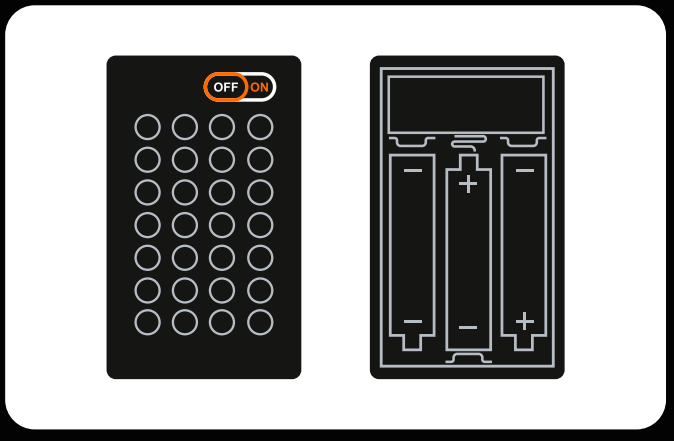

4.Check that the power switch on the battery box is on and that the "+" and "-" poles of the battery are correctly placed (using new batteries)and ensure that the upper and lower connections to the "+" and "-" poles of the power switch are installed correctly.

If you have checked each string of lights according to the guide above and the lights still do not light up, please contact our customer service for assistance.

LED LIGHT KIT PACKAGE LIST

Please check and make sure you get all the lighting accessories. Contact us if there are any missing components.

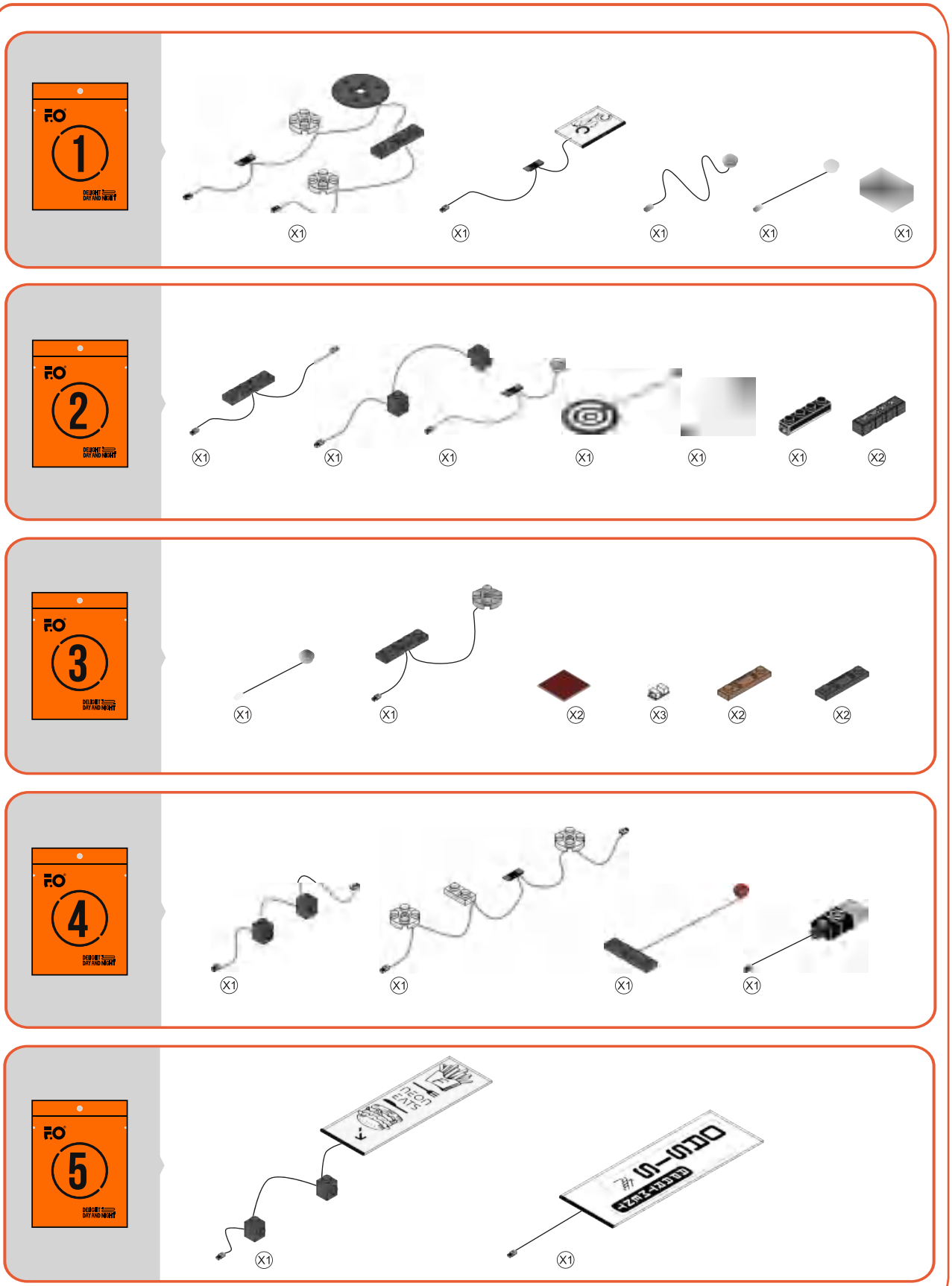

Note: when installing, don't pull it hard, bend it or shake it to avoid damage. The supply voltage should be below 5V, and the button battery holder voltage can be below 6V. Not for children under eight.

SAFETY PRECAUTIONS

1. Before use, please make sure to check the voltage to avoid damage to the product and potential safety hazards.
2. The lights in the product are not replaceable. If they are damaged or not lighting up, please refer to the troubleshooting section or contact our customer service for assistance.
3. Avoid pulling on the light connection wires as this may cause damage.
4. Do not expose the product to water as it may damage the product.
5. Please read and follow the instructions carefully during building to ensure a good building experience.
6. This product doesn't include batteries or power banks. Please prepare your own batteries or power banks to power the LED light kits.
7. While there are several models available, the operating procedures and mechanism for FO expansion boards and battery boxes remain consistent. For inquiries, we encourage you to reach out to our customer service team for assistance.
8. Certain products are accompanied by a Type-C cable designed exclusively for use with the respective product. The USB end of the cable connects to a 5V DC power source, while the Type-C end connects to the Type-C expansion board.Please disconnect the input power when not in use for an extended period.
9. Do not simultaneously use multiple power sources to supply power to the LED light kits.

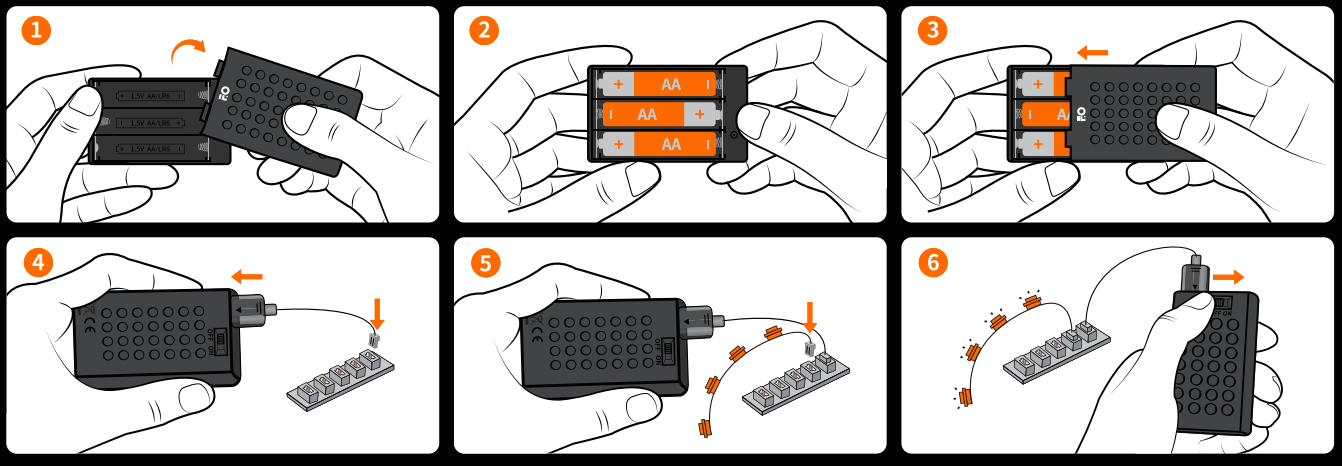

Battery box name: No. 5 building block battery box Battery type: AA*3 (No. 5) Battery rated voltage: 1.5V

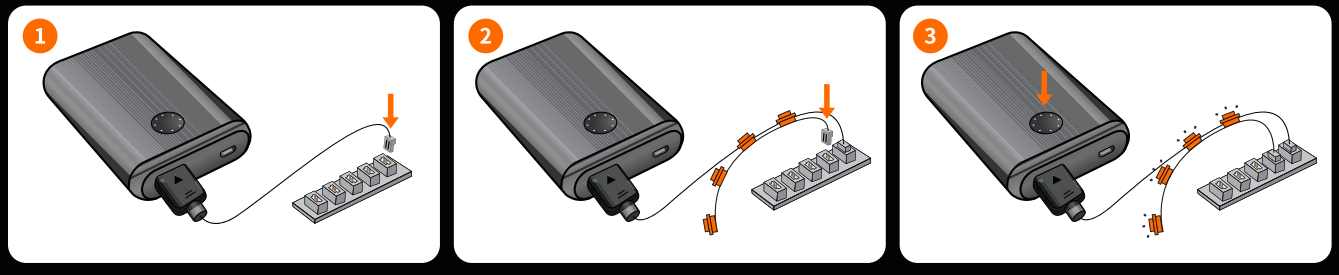

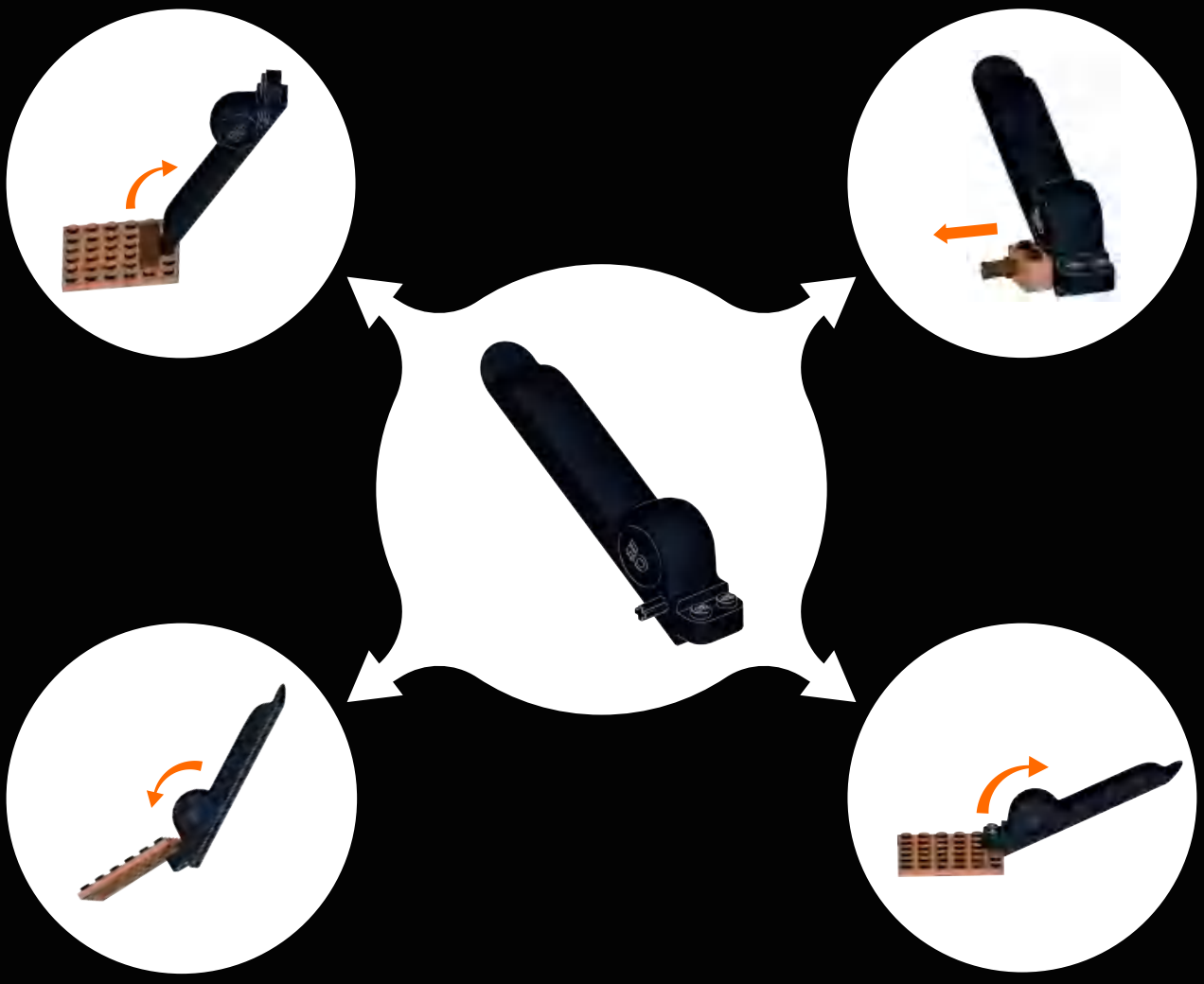

HOW TO UNPLUG THE CONNECTOR

Note that the new connector will be tight. To remove it, gently shake it from side to side until it loosens, then pull it out.

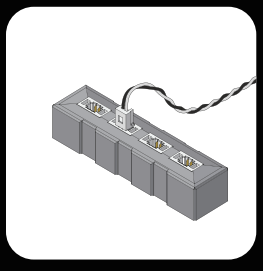

1.The connector is installed, as shown in the picture.

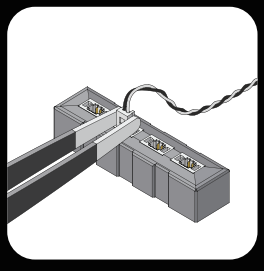

2.Use tweezers to hold the connector on both sides.

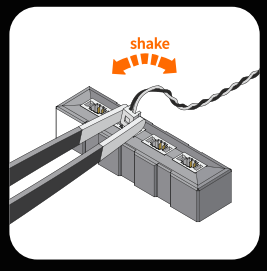

3.Gently shake the connector from side to side.

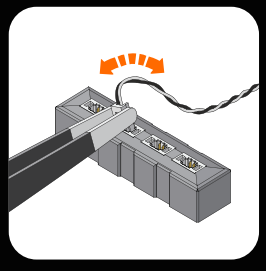

4.When the connector is tight, it will take several shakes to loosen it.

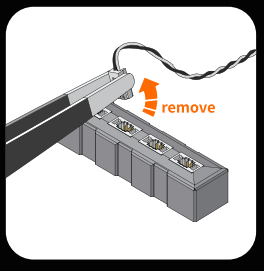

5.Remove the connector.

ANALOGOUS COLORS LIST

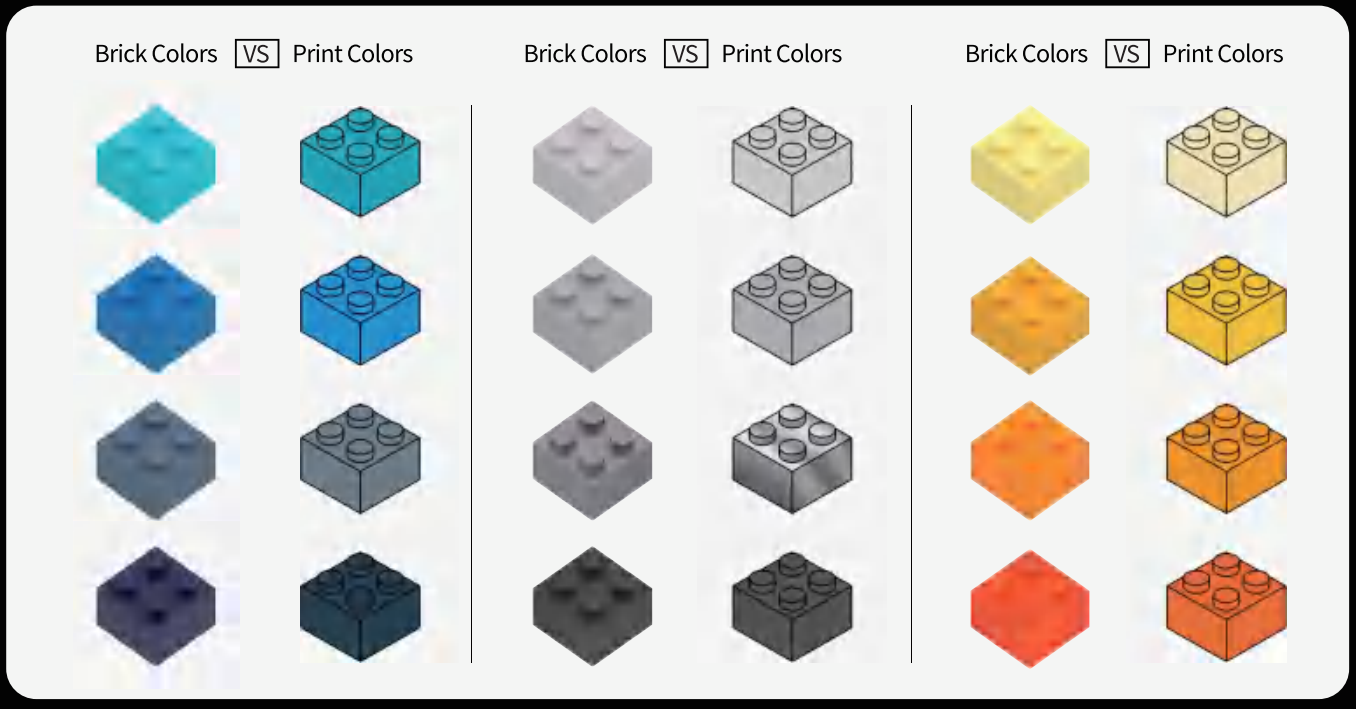

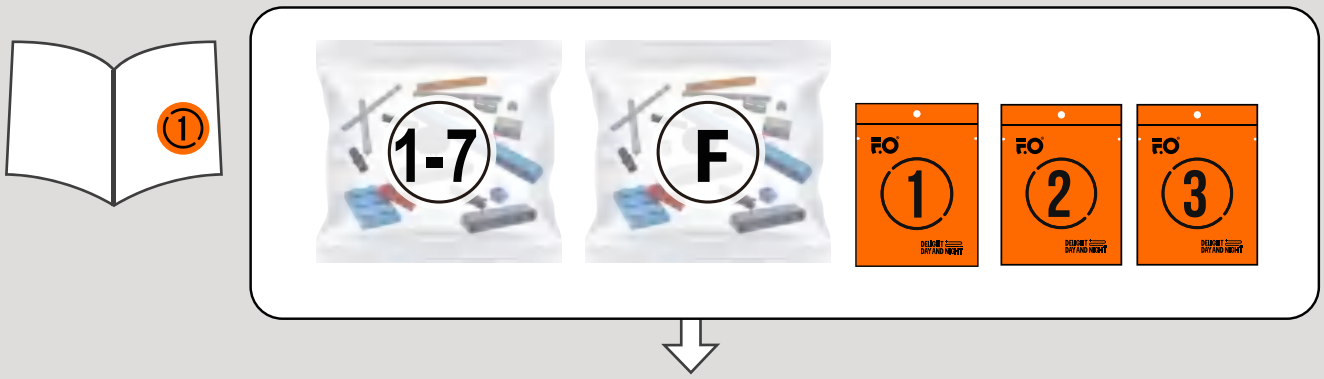
1
1-7
F
F.O
1
F.O
2
F.O
3

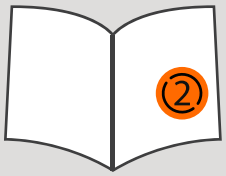
2

8-11
F
2
3
4
5

MULTIPLE SET COMBINATIONS

When you have multiple sets that can be connected via a side power connector, please ensure that a single power source is used when combining them.

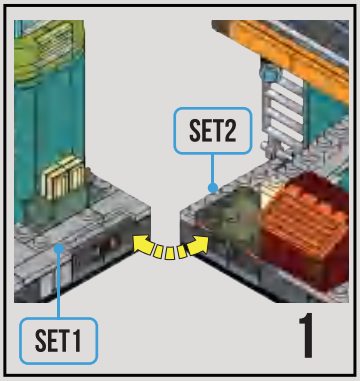

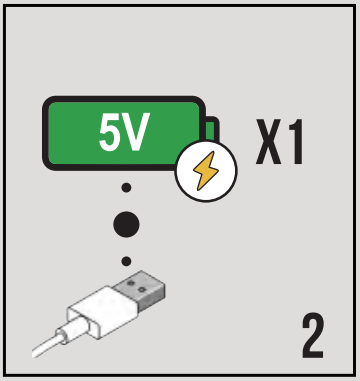

2X3 C-PORT EXPANSION BOARD

We've launched a new lighting accessory called the "2x3 C-Port Expansion Board" .In addition to the standard functions of an expansion board, the added Type-C interface and control switch make power supply more convenient, just like charging a mobile phone.

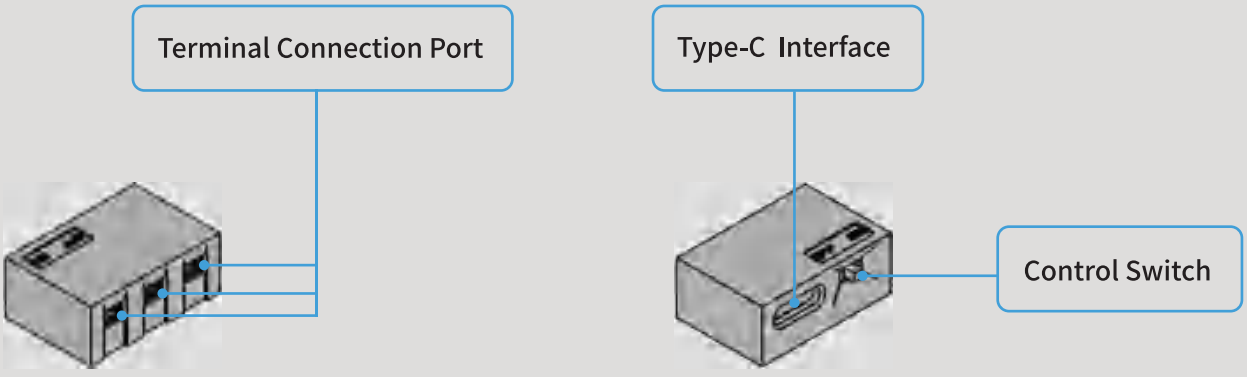

The 2x3 C-Port Expansion Board supports two power supply methods, both capable of illuminating the lights. You can choose one according to your needs.

Method 1

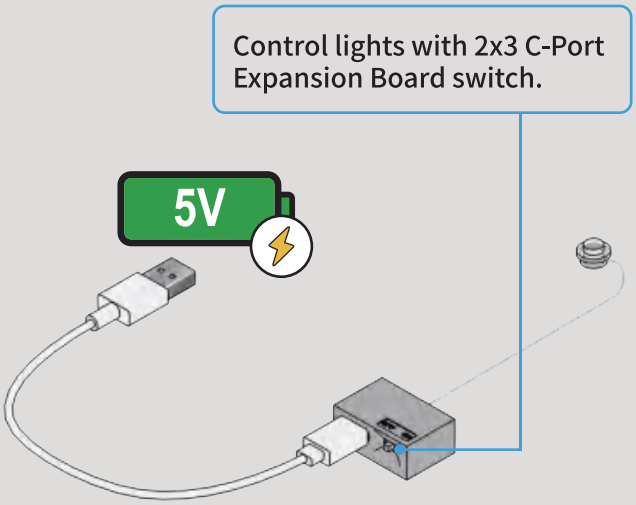

Method 2

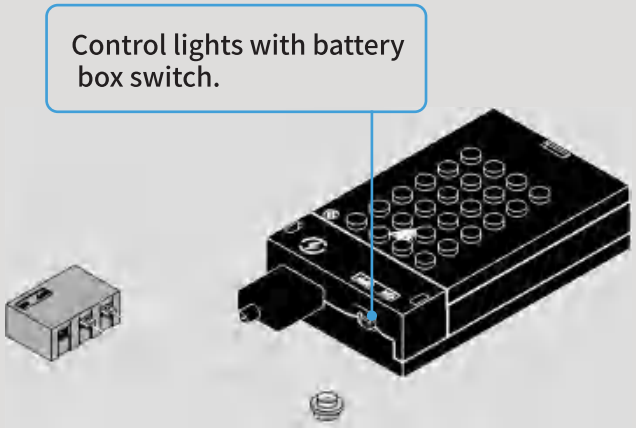

*In the assembly guide, Method 1 will be primarily used. but you can also choose Method 2 without affecting other steps.

LED LIGHT KITS INSPECTION GUIDE

1、To enhance your experience, please check the LED Light Kits according to the guide before starting assembly.
2、After inspection, please return the LED Light Kits to their original bags for future use.
3、If any issues occur, please contact customer service.

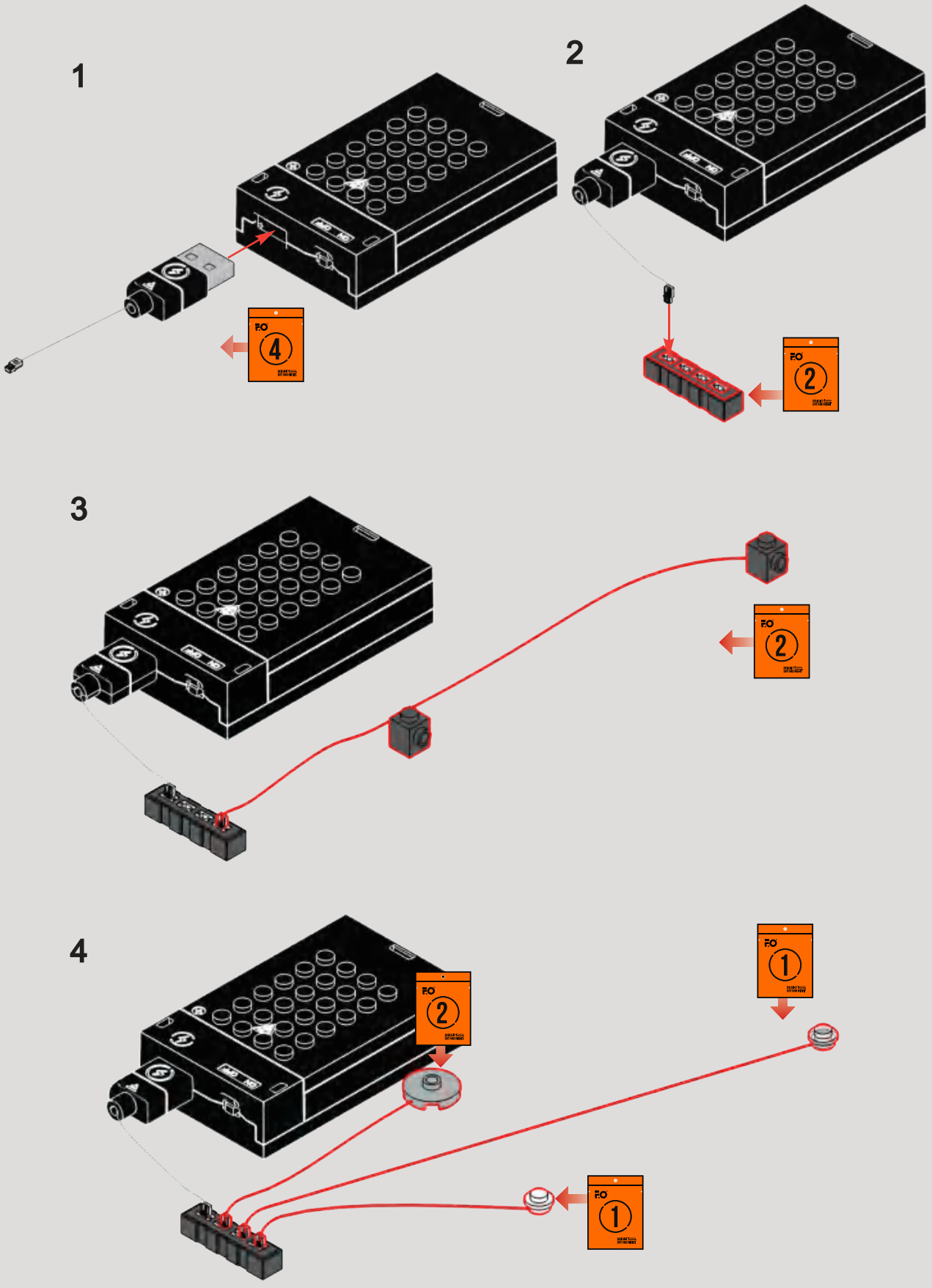

5

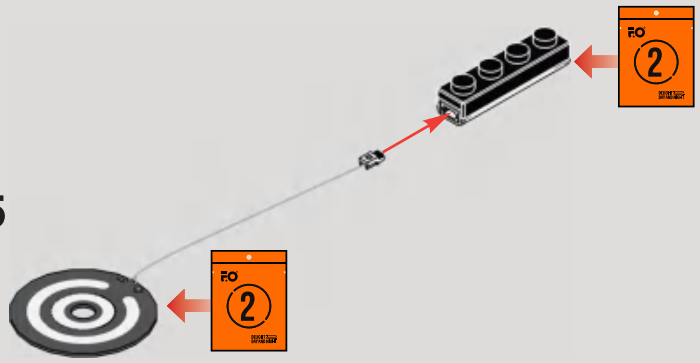

6

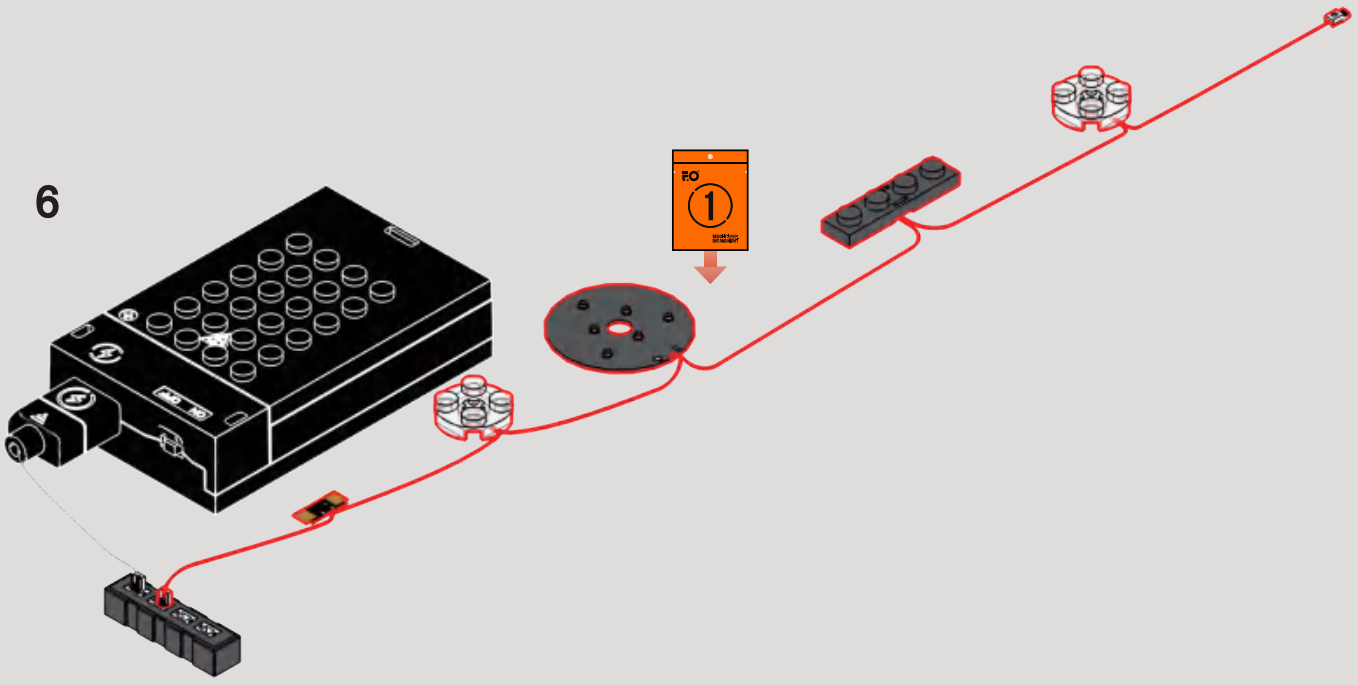

7

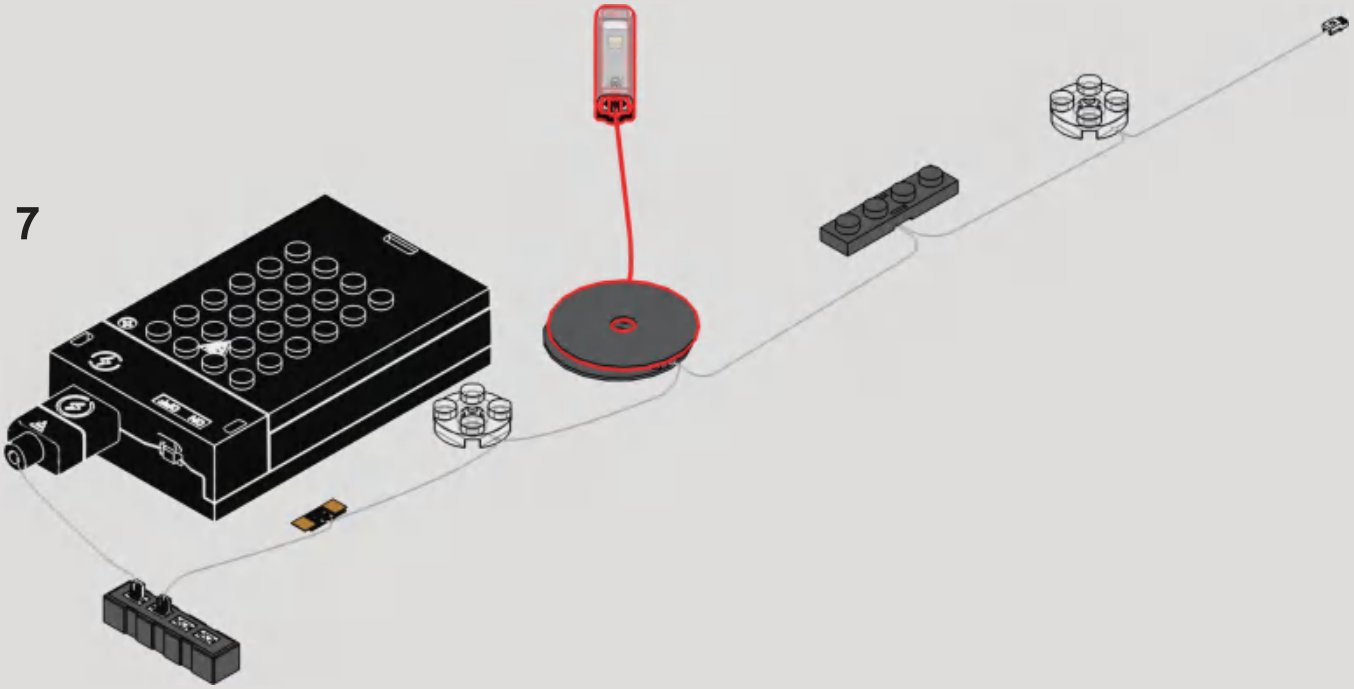

8

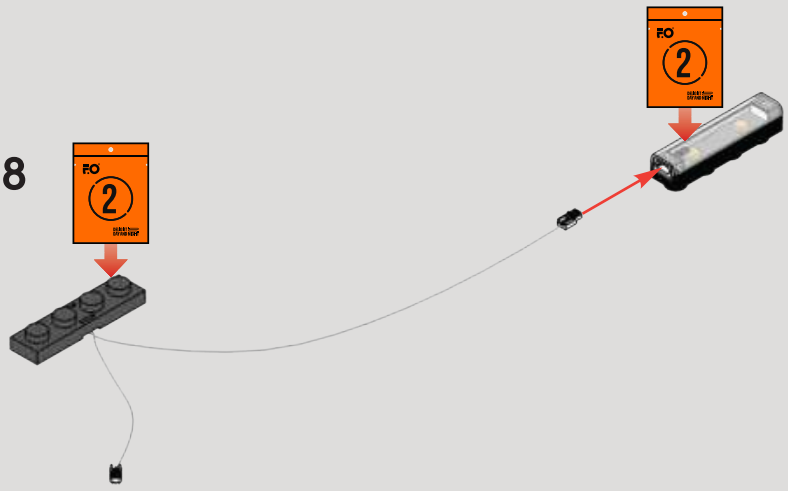

9

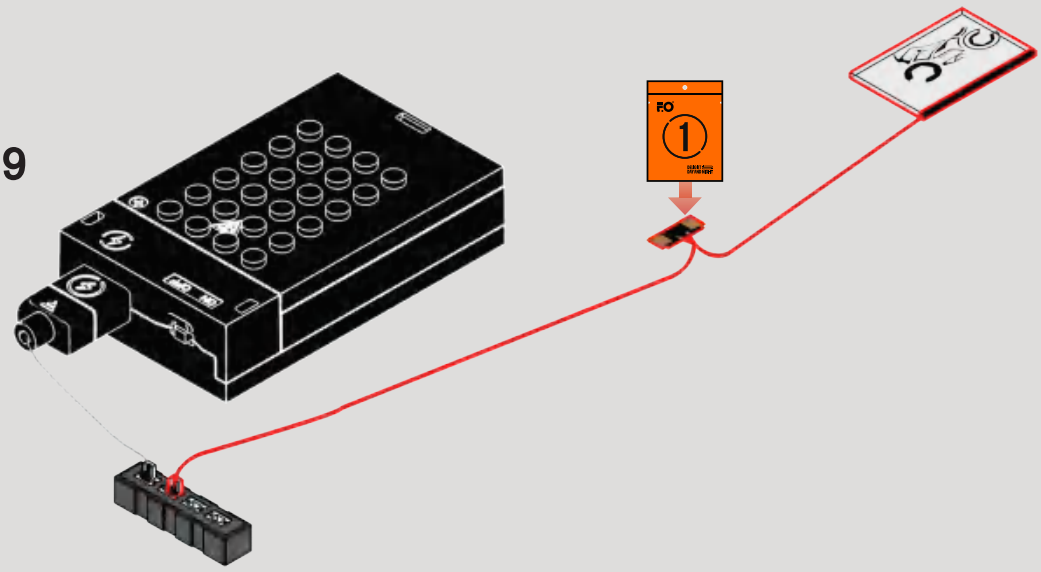

10

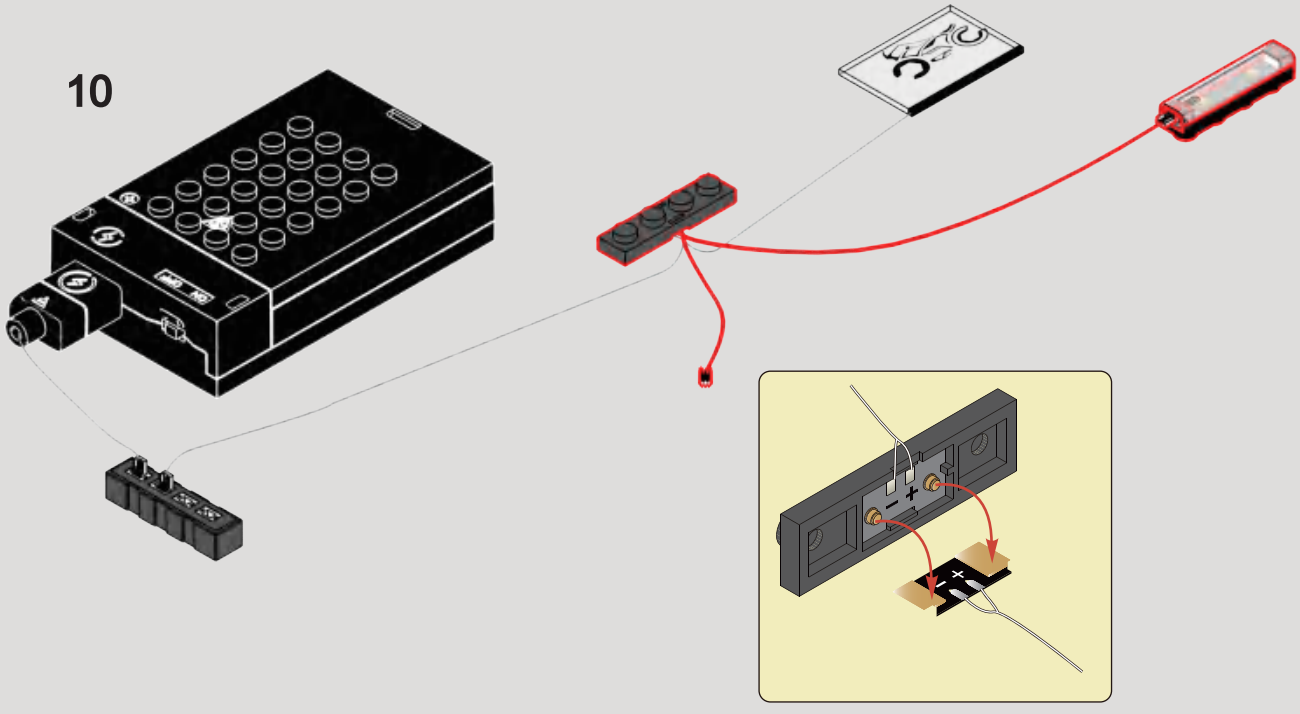

11

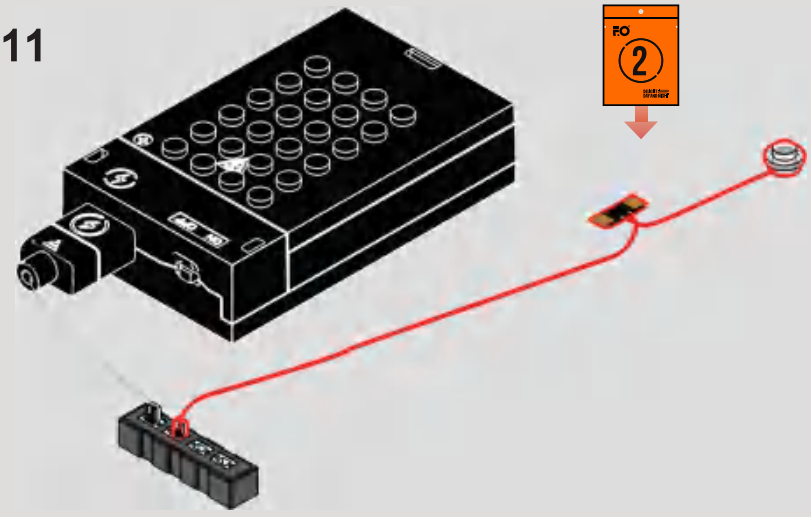

12

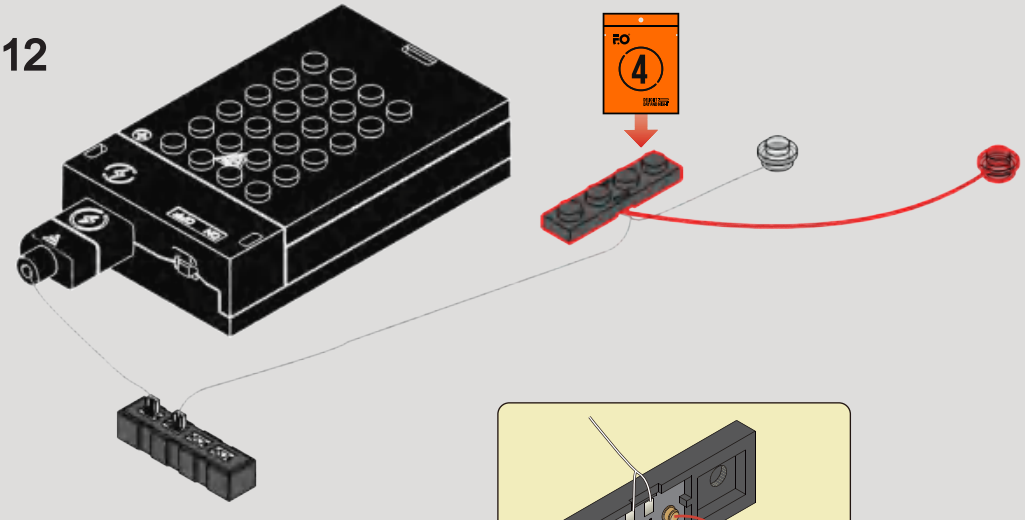

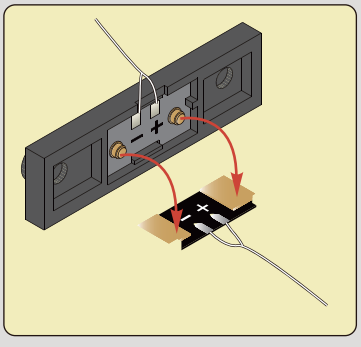

13

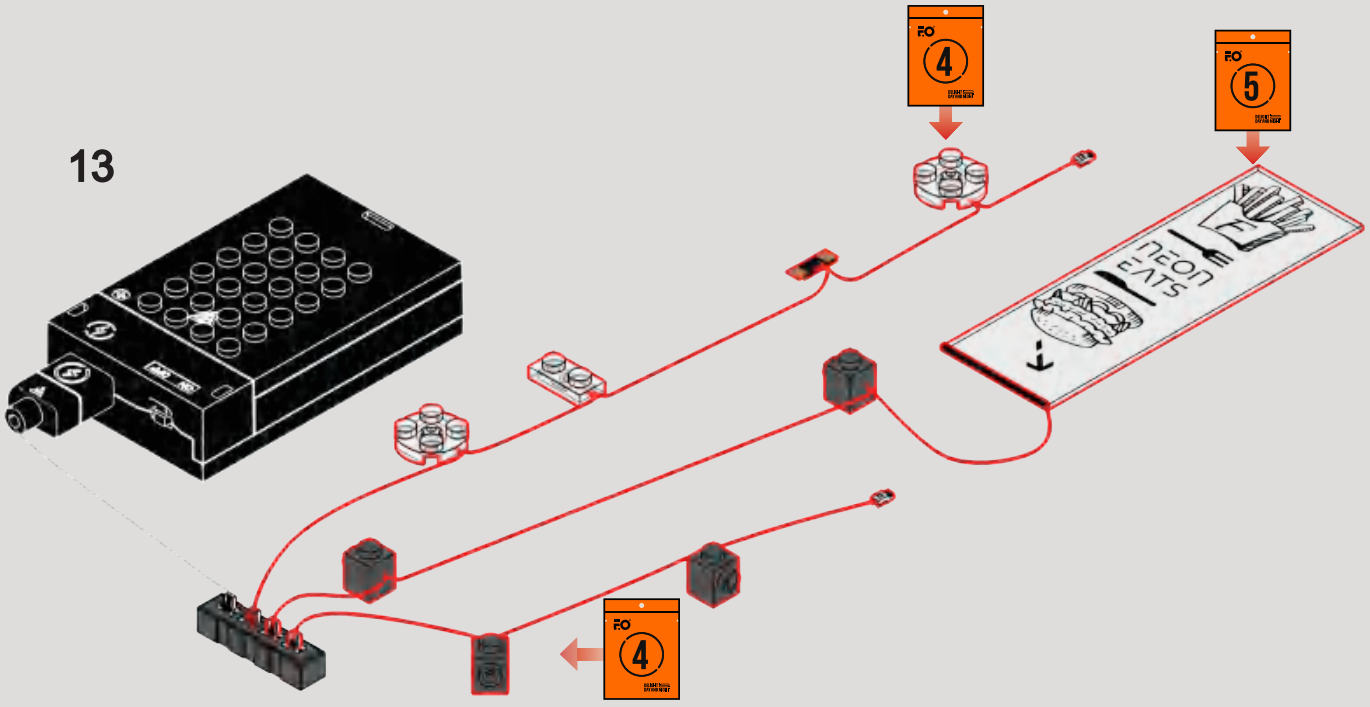

14

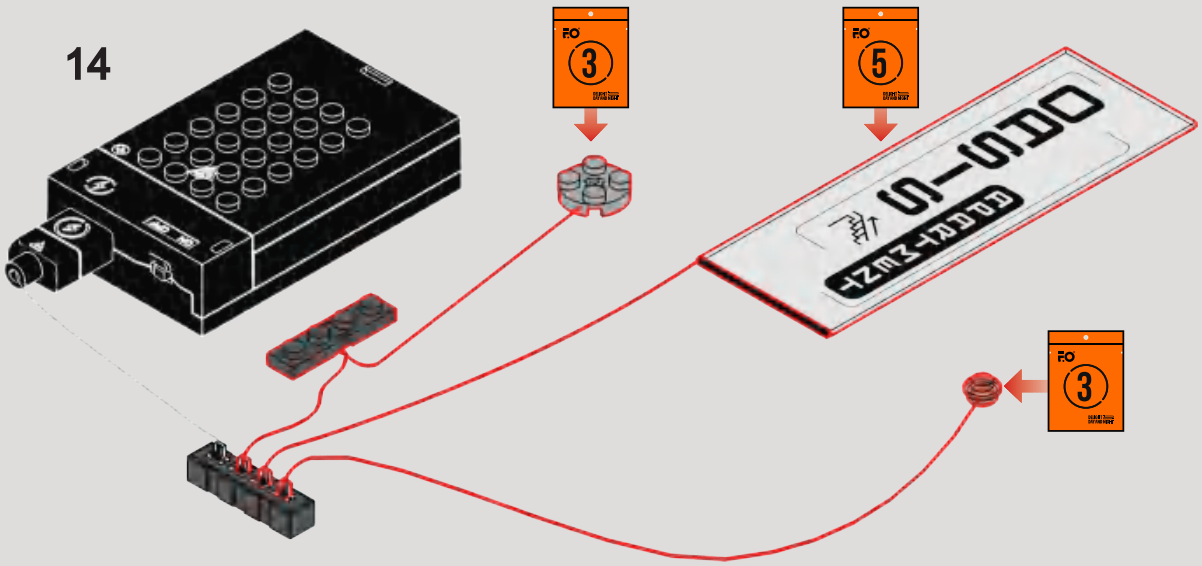

F-pack has two parts: minifigure bricks and special bricks. Assemble minifigure bricks according to instructions on the right. Keep special bricks for later assembly steps.

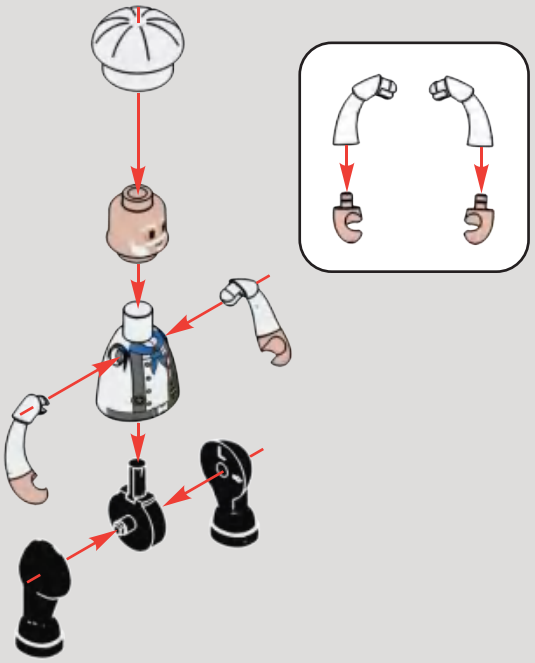

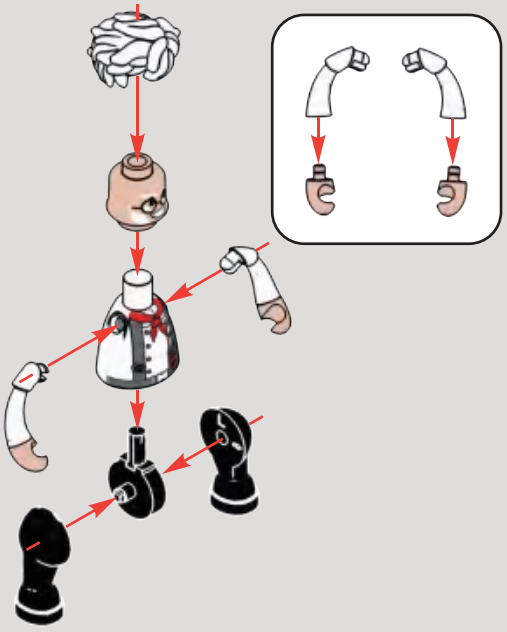

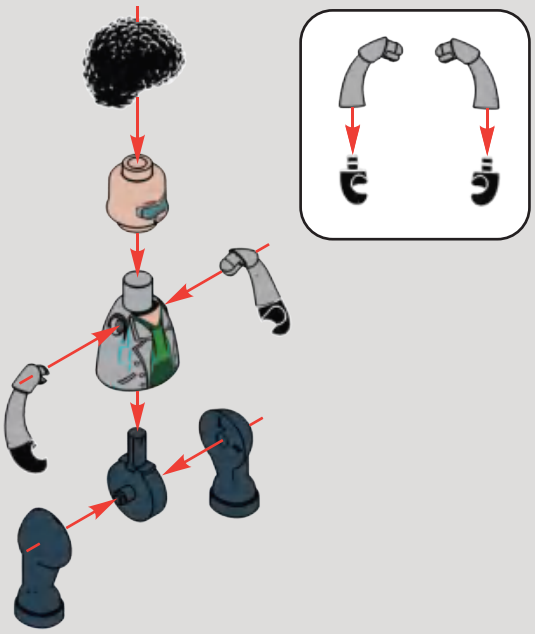

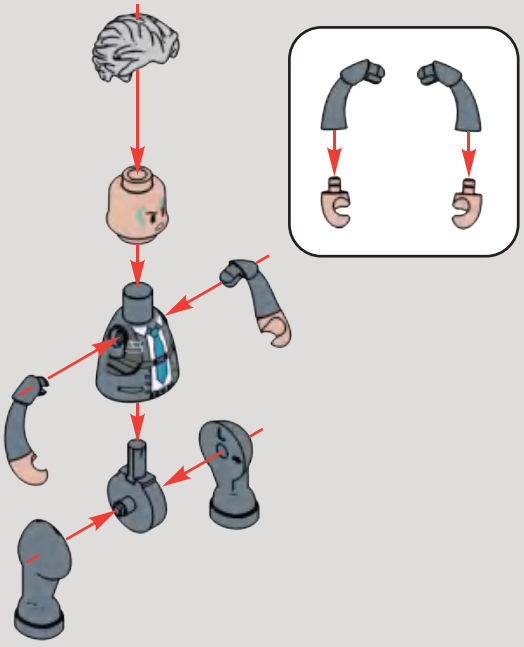

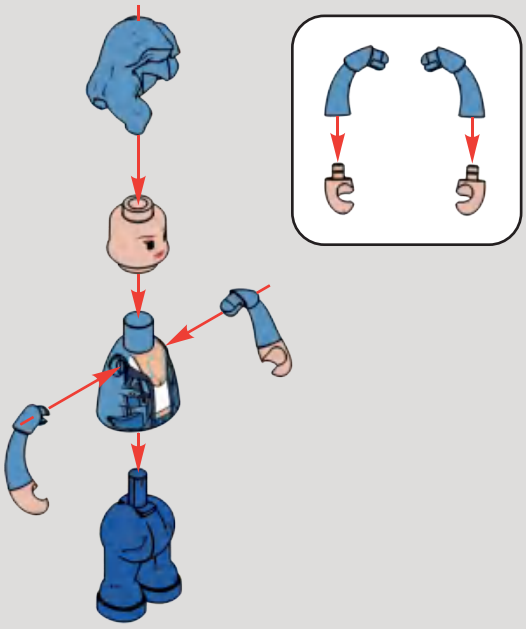

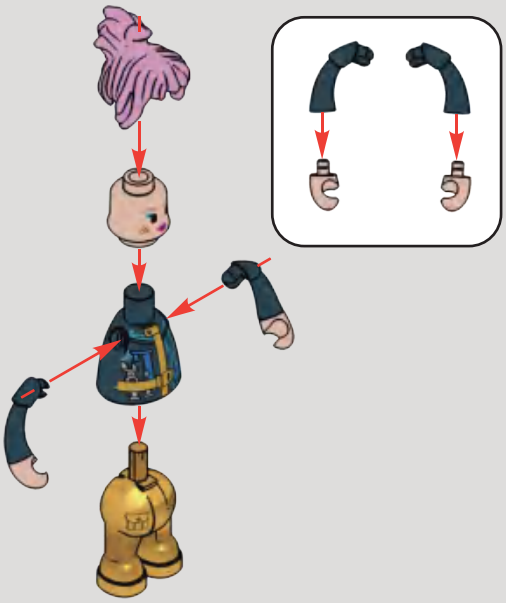

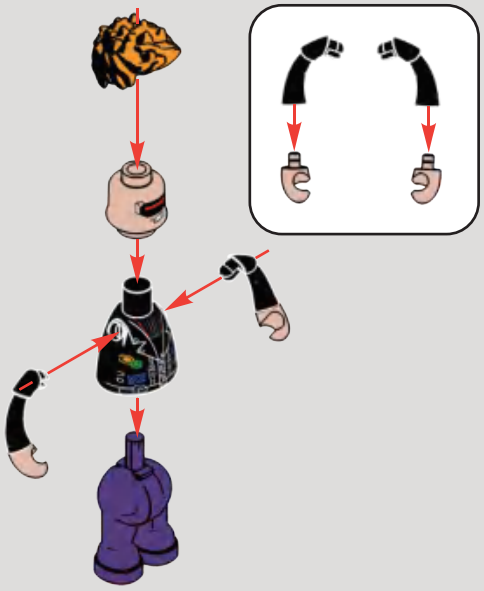

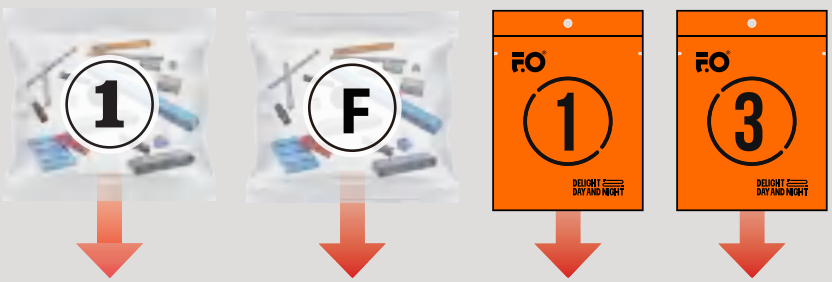
1
F
F.O
1
DELIGHT DAY AND NIGHT
F.O
3
DELIGHT DAY AND NIGHT

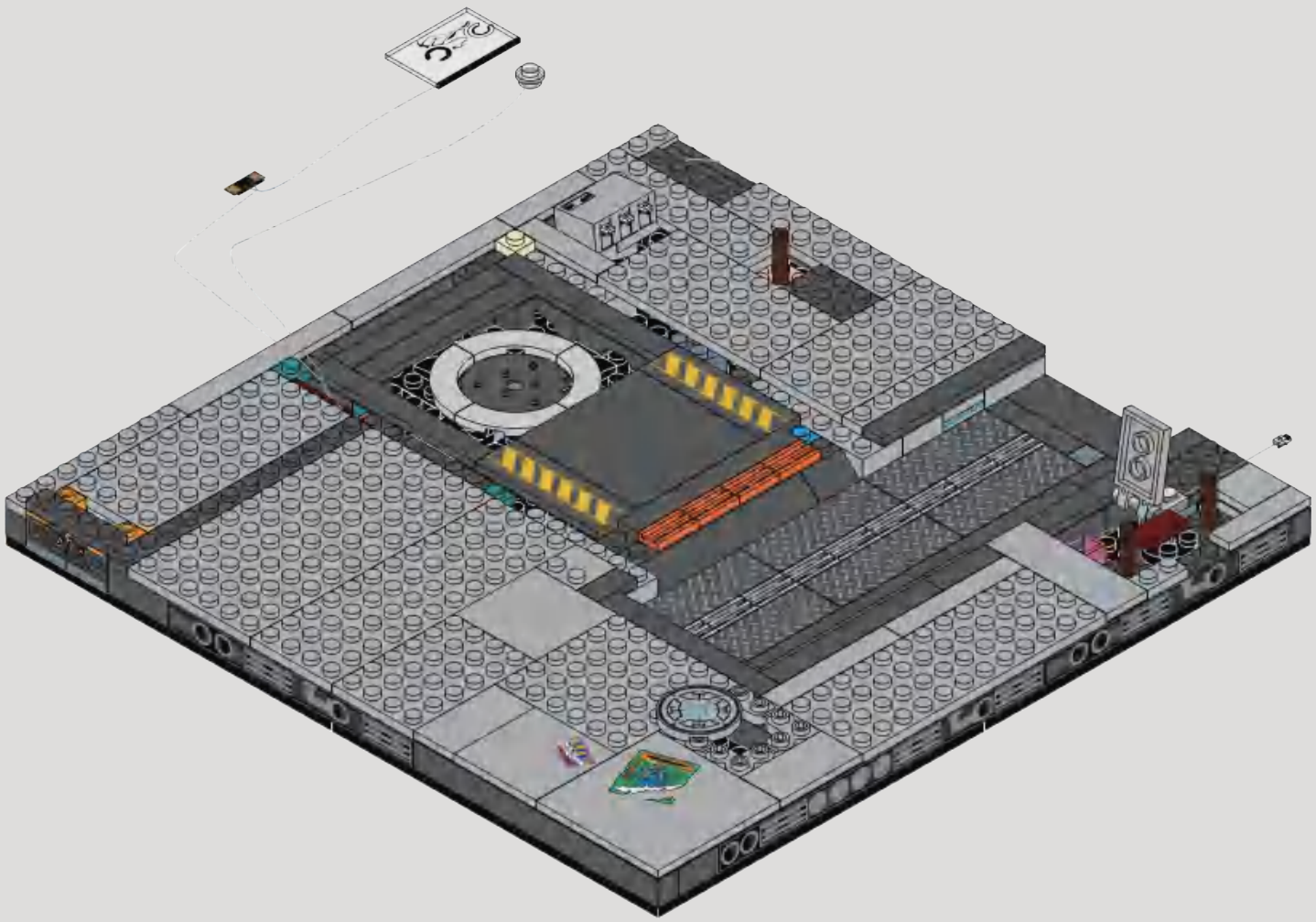

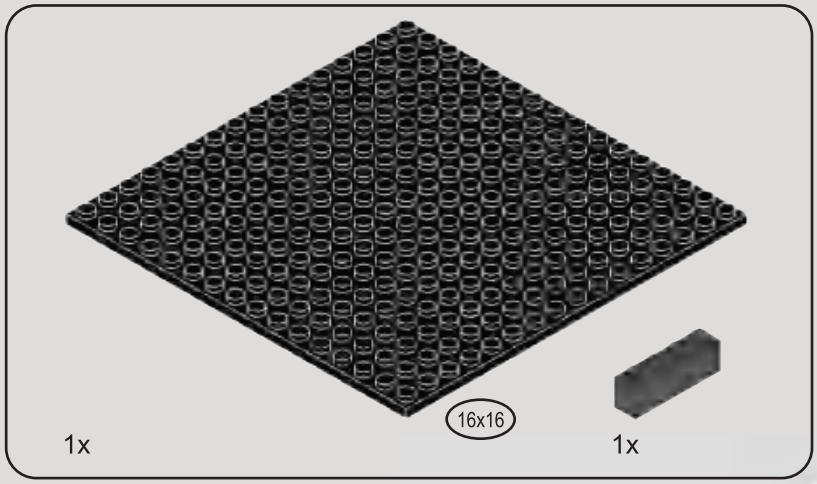

1

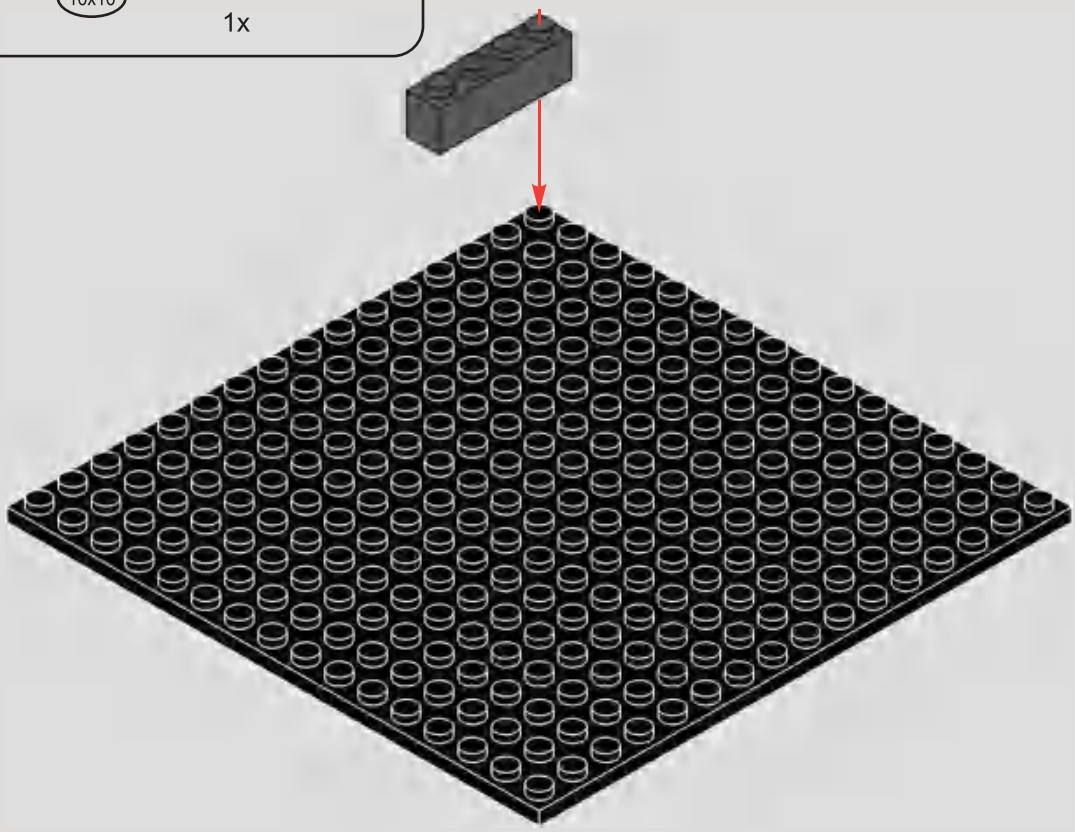

2

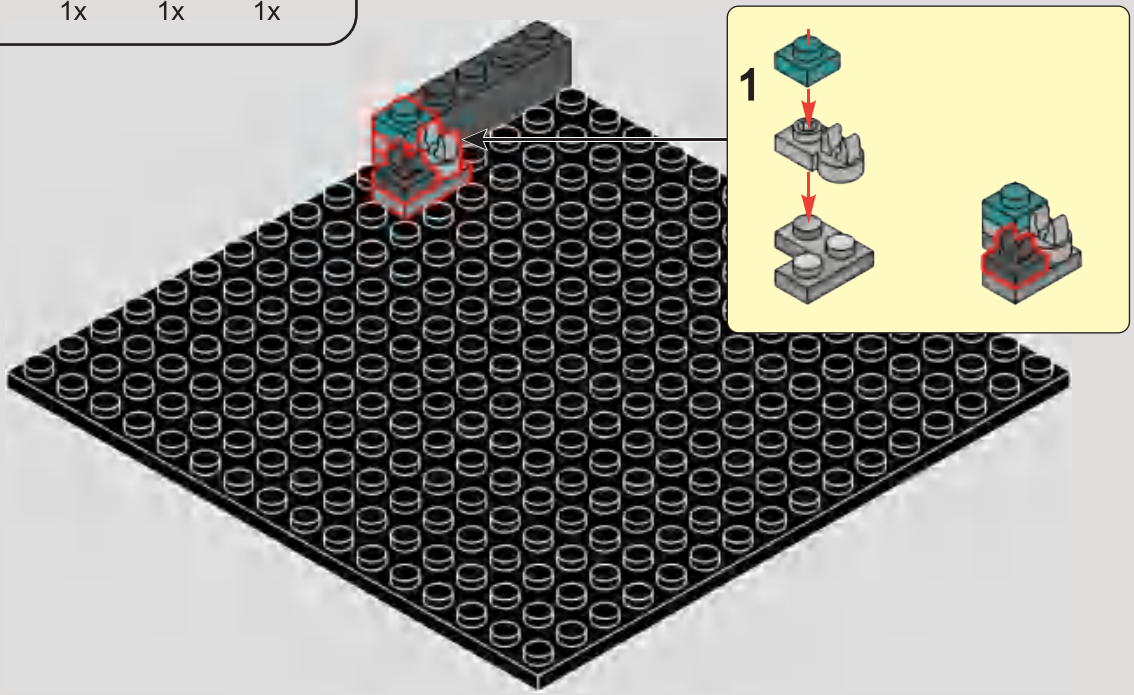

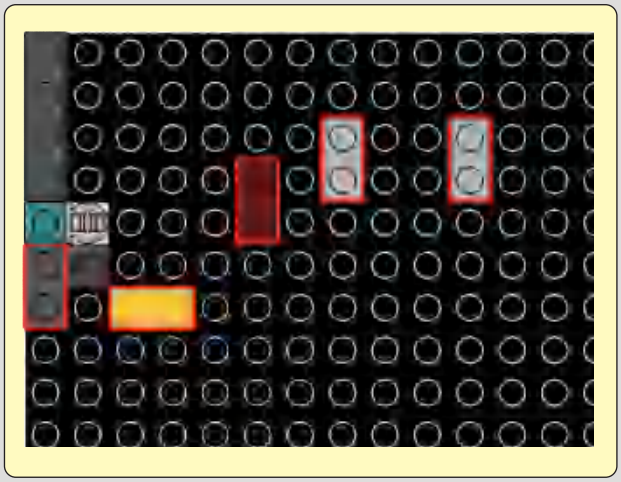

3

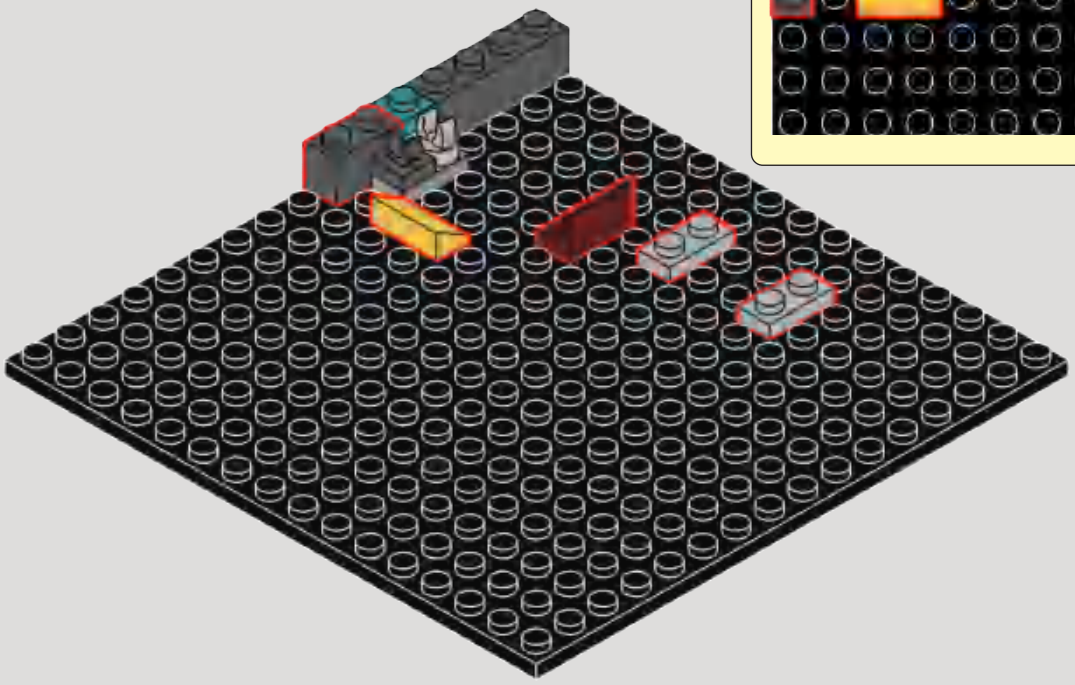

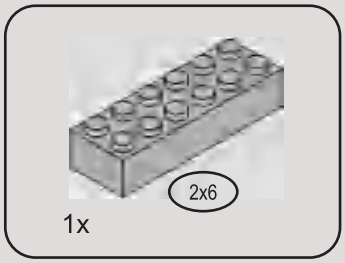

4

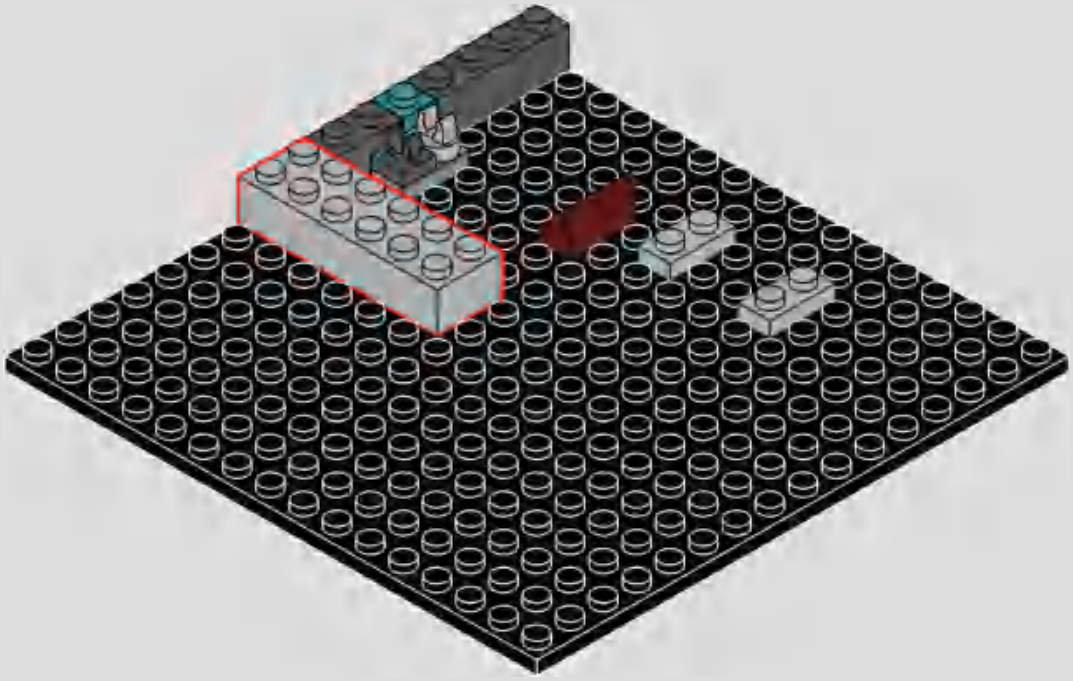

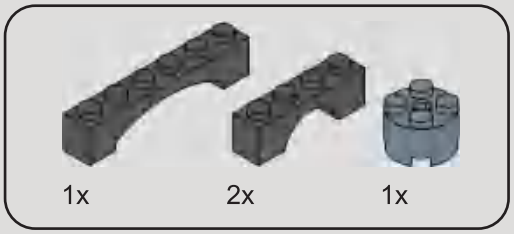

5

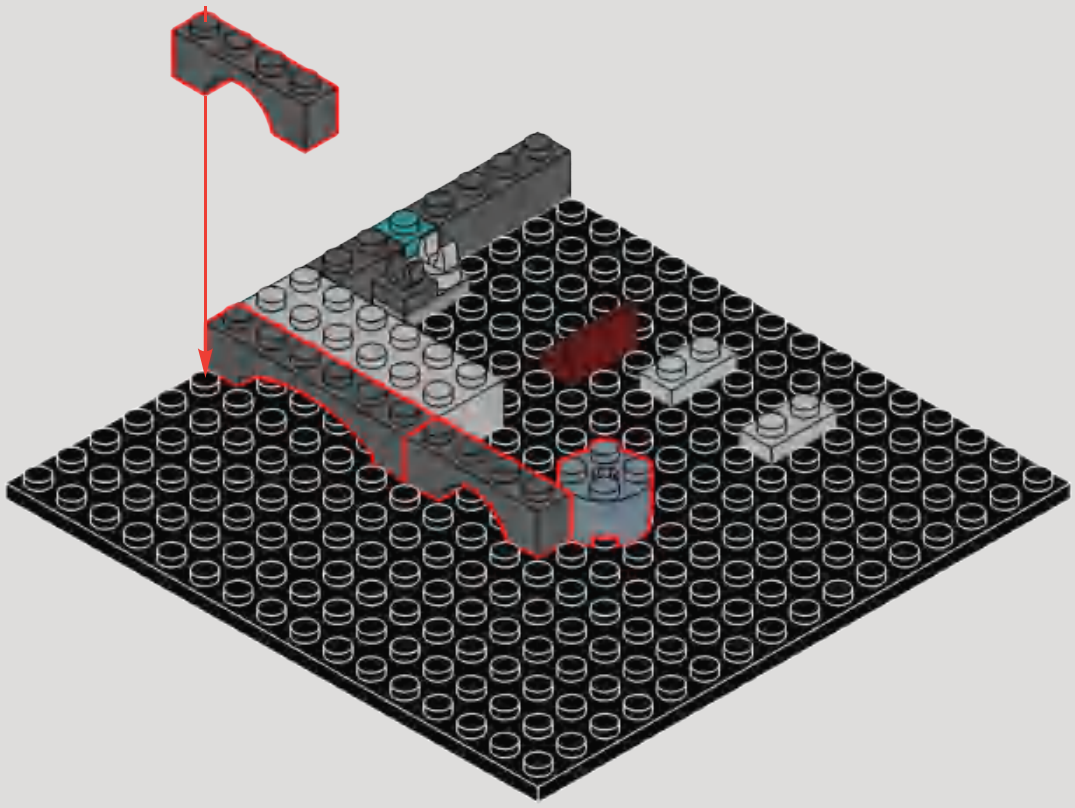

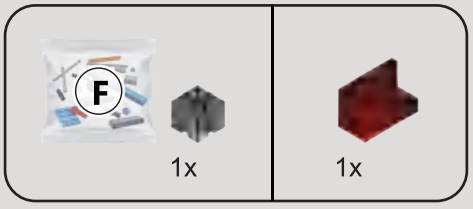

6

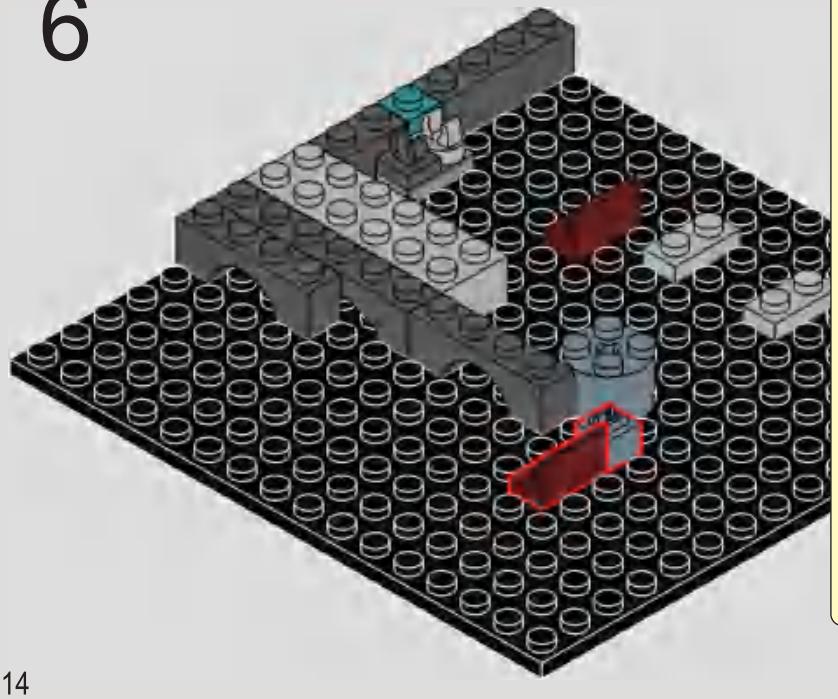

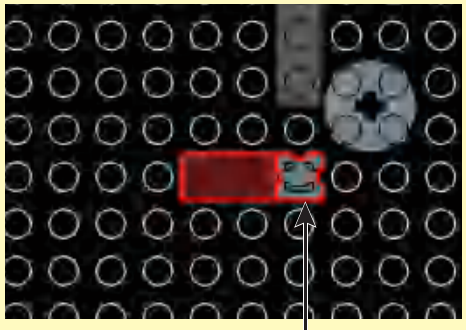

This part is used for organizing light wires and includes three notched sides and one solid side. Please pay attention to the installation direction when assembling.

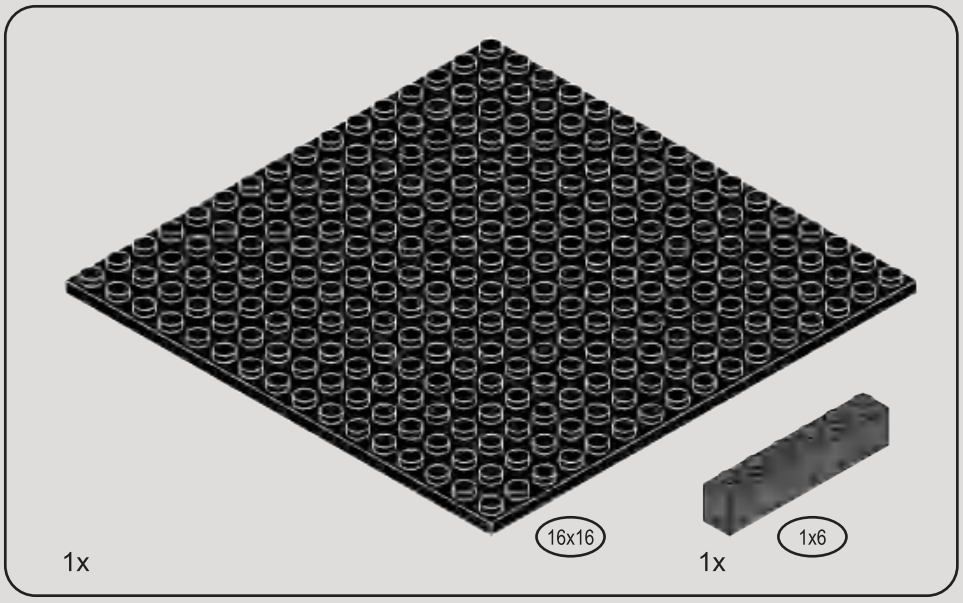

7

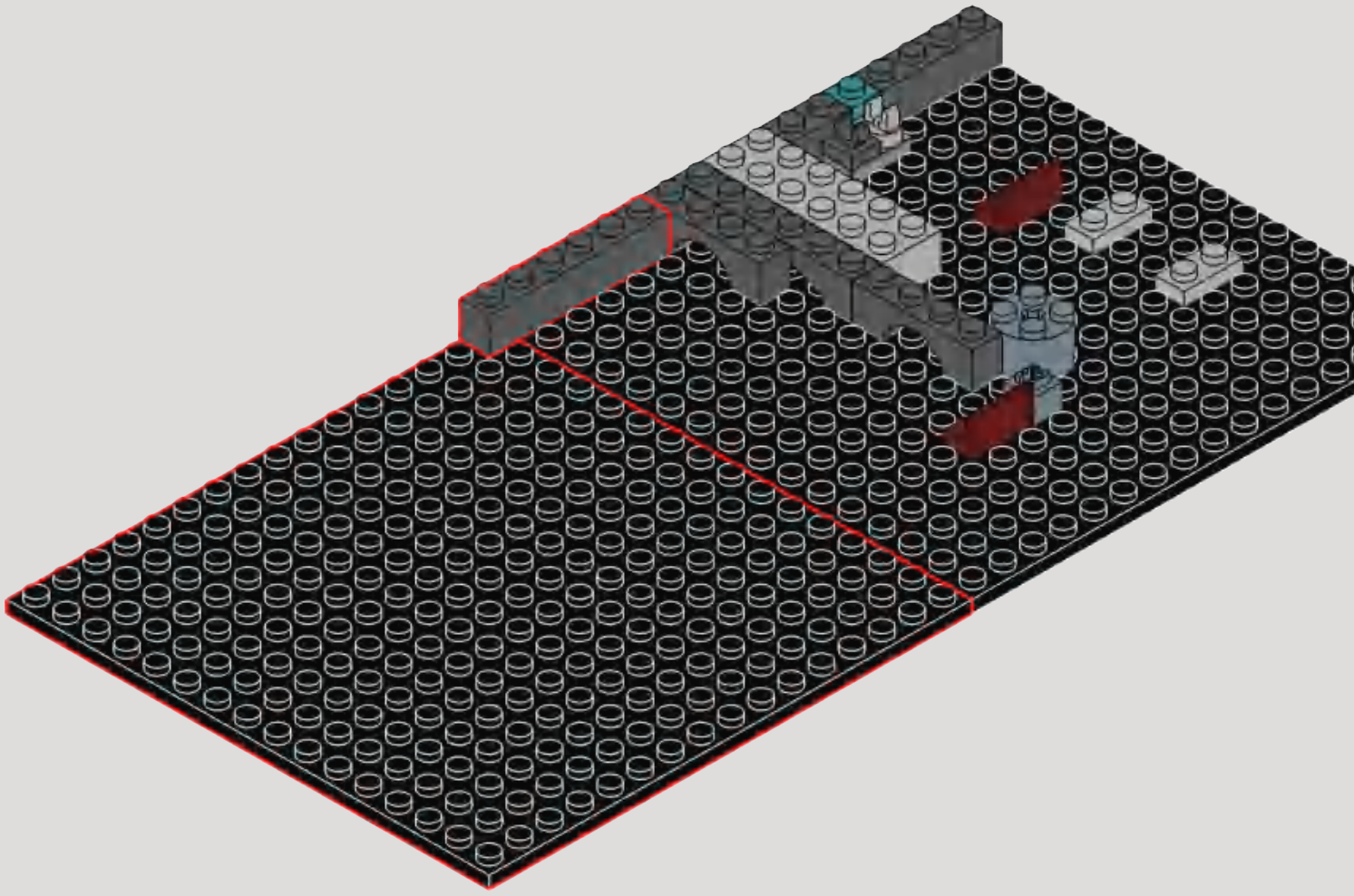

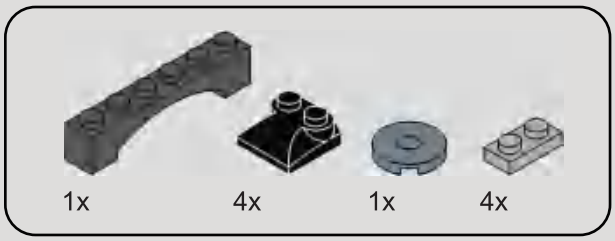

8

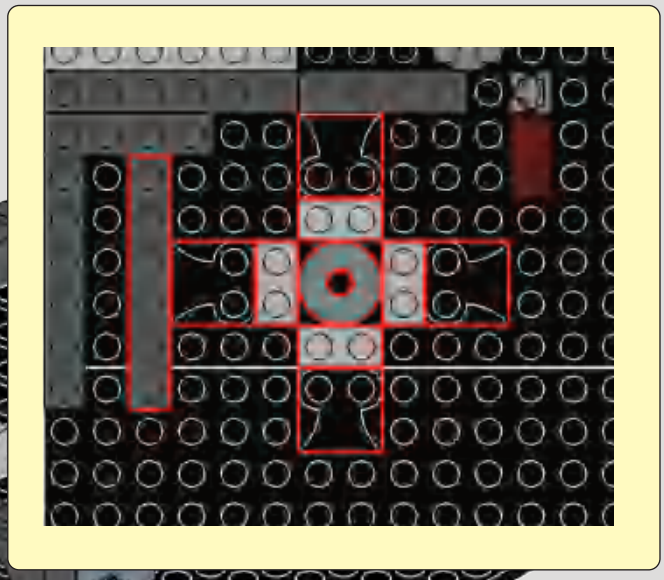

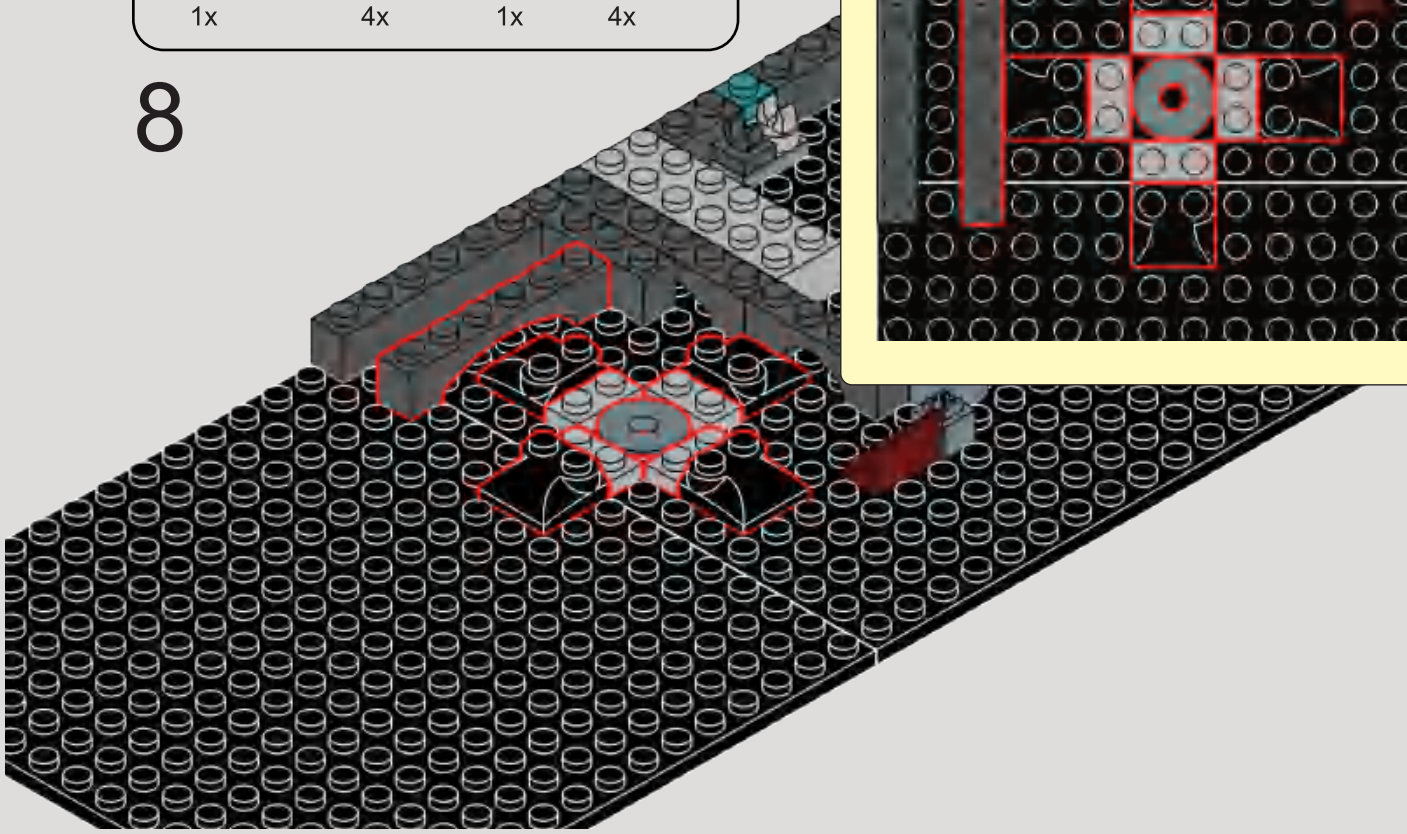

9

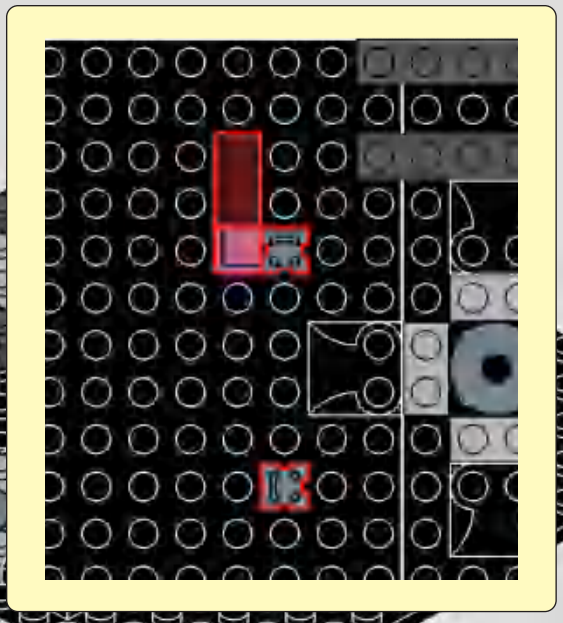

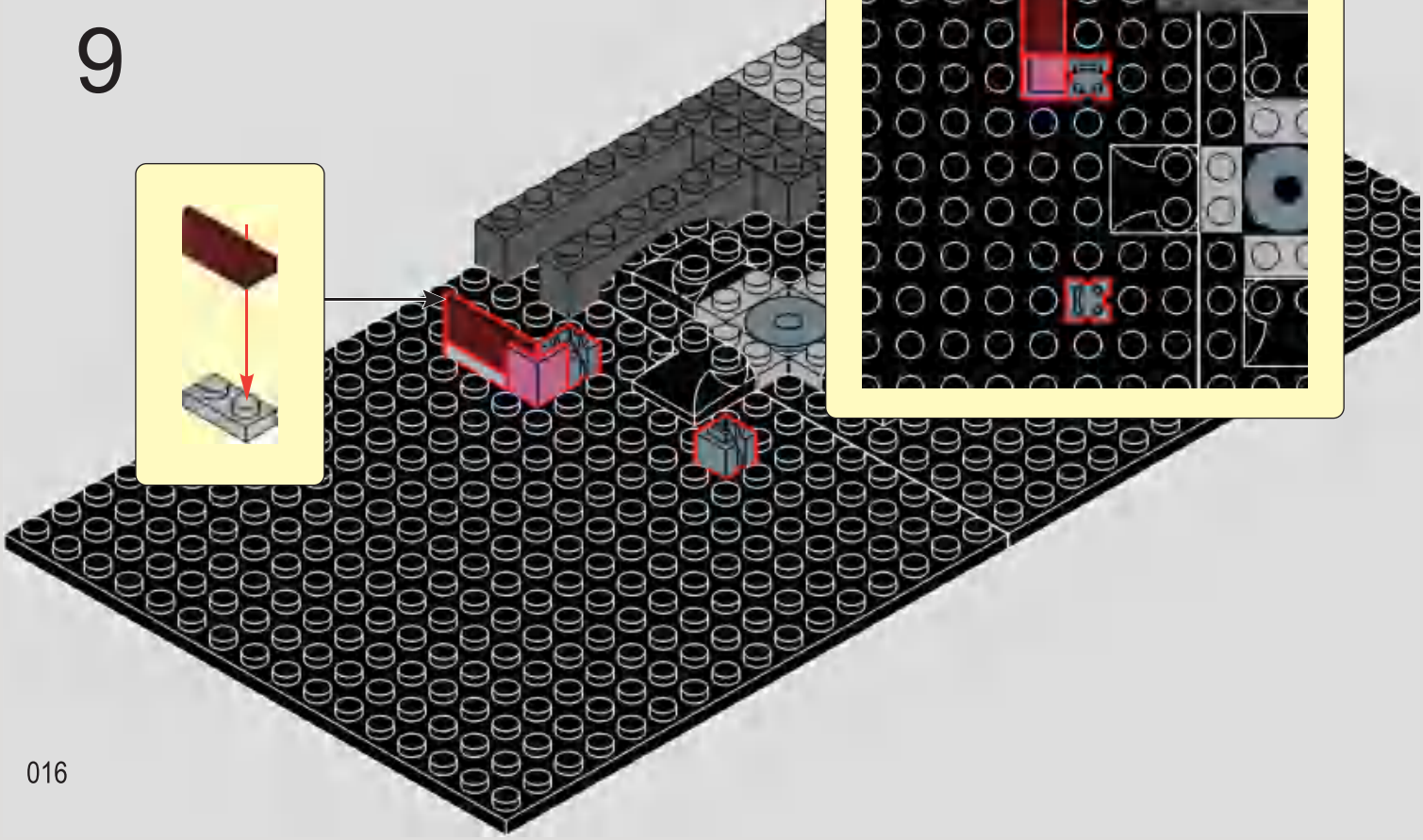

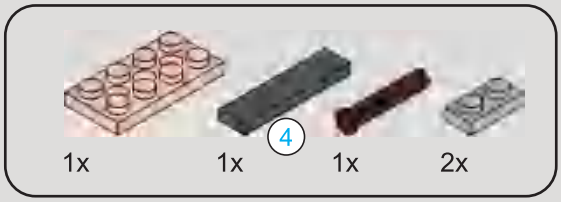

10

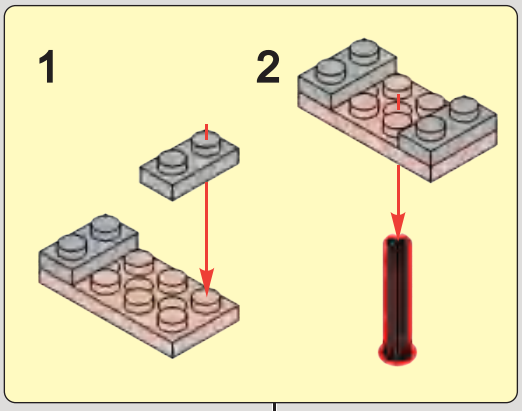

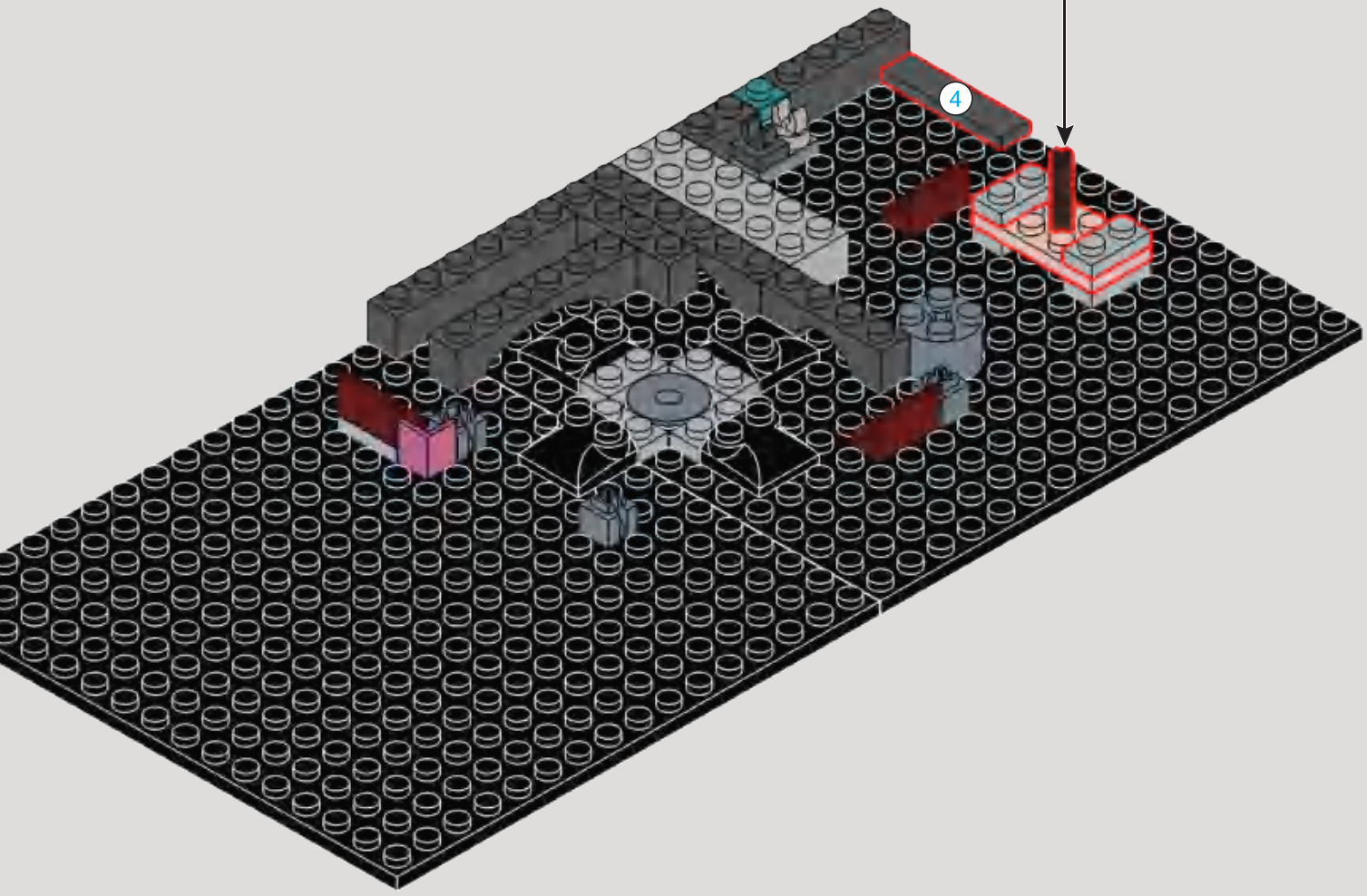

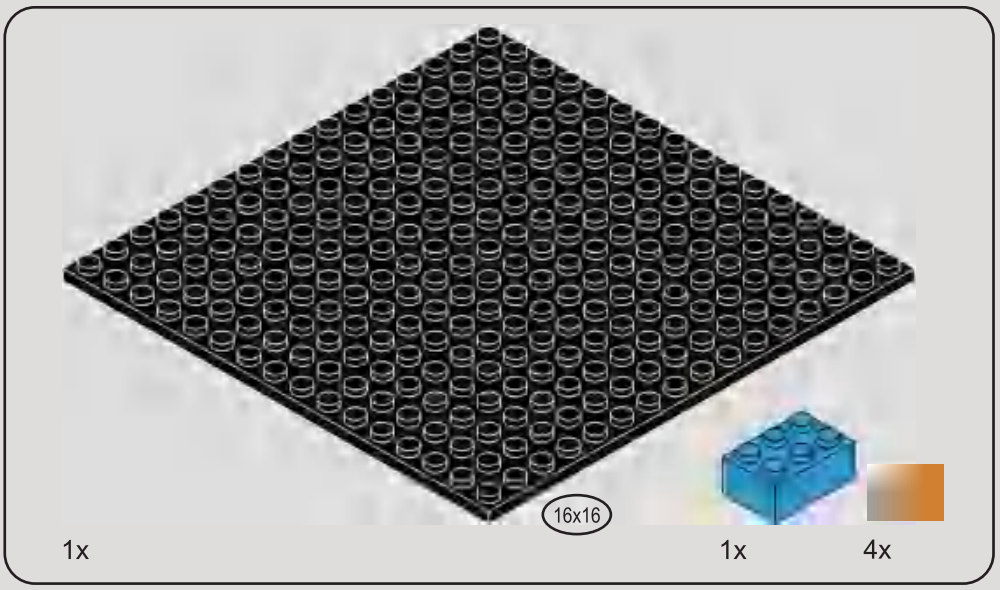

11

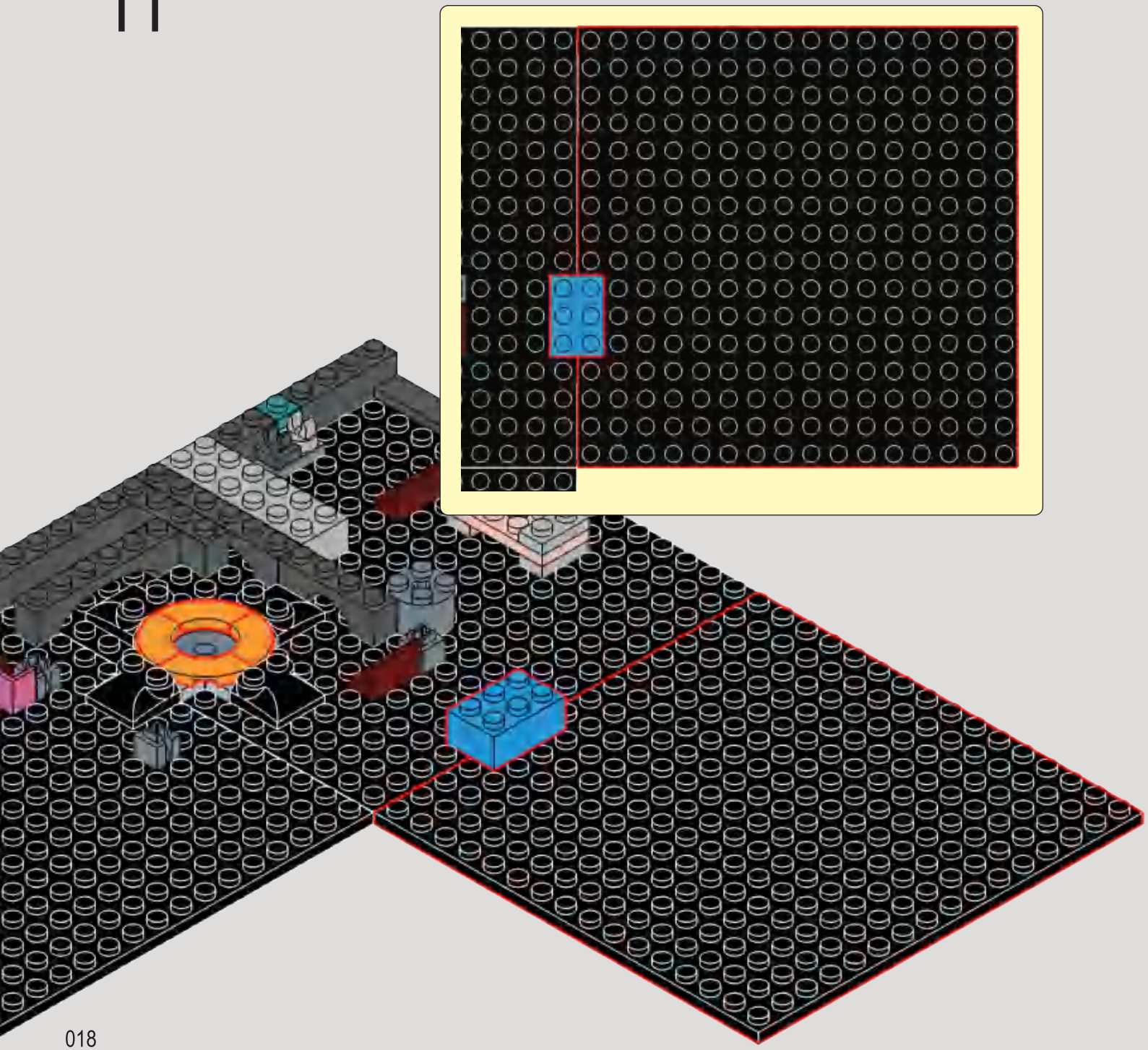

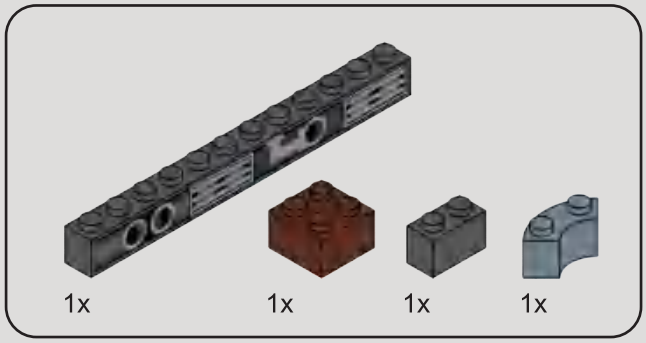

12

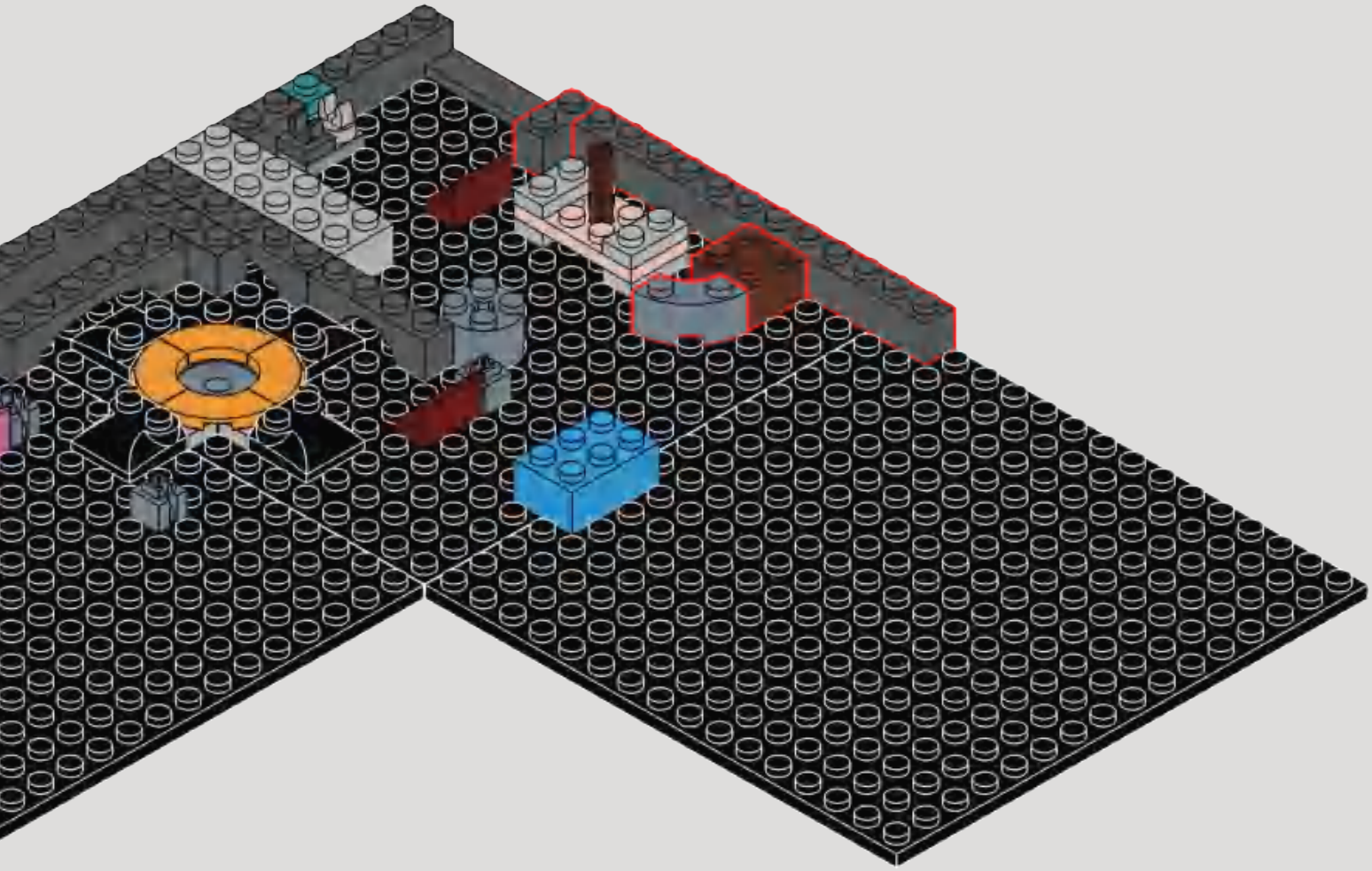

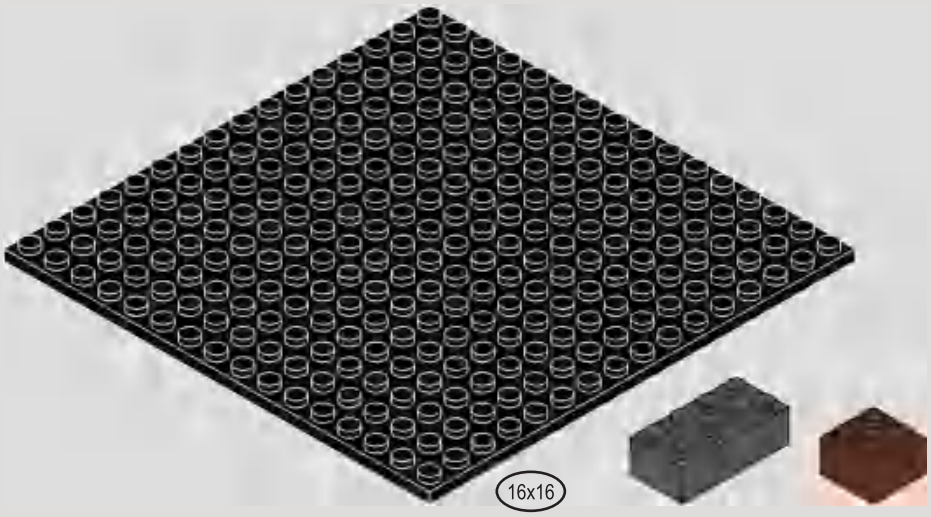

1x 1x 1x

13

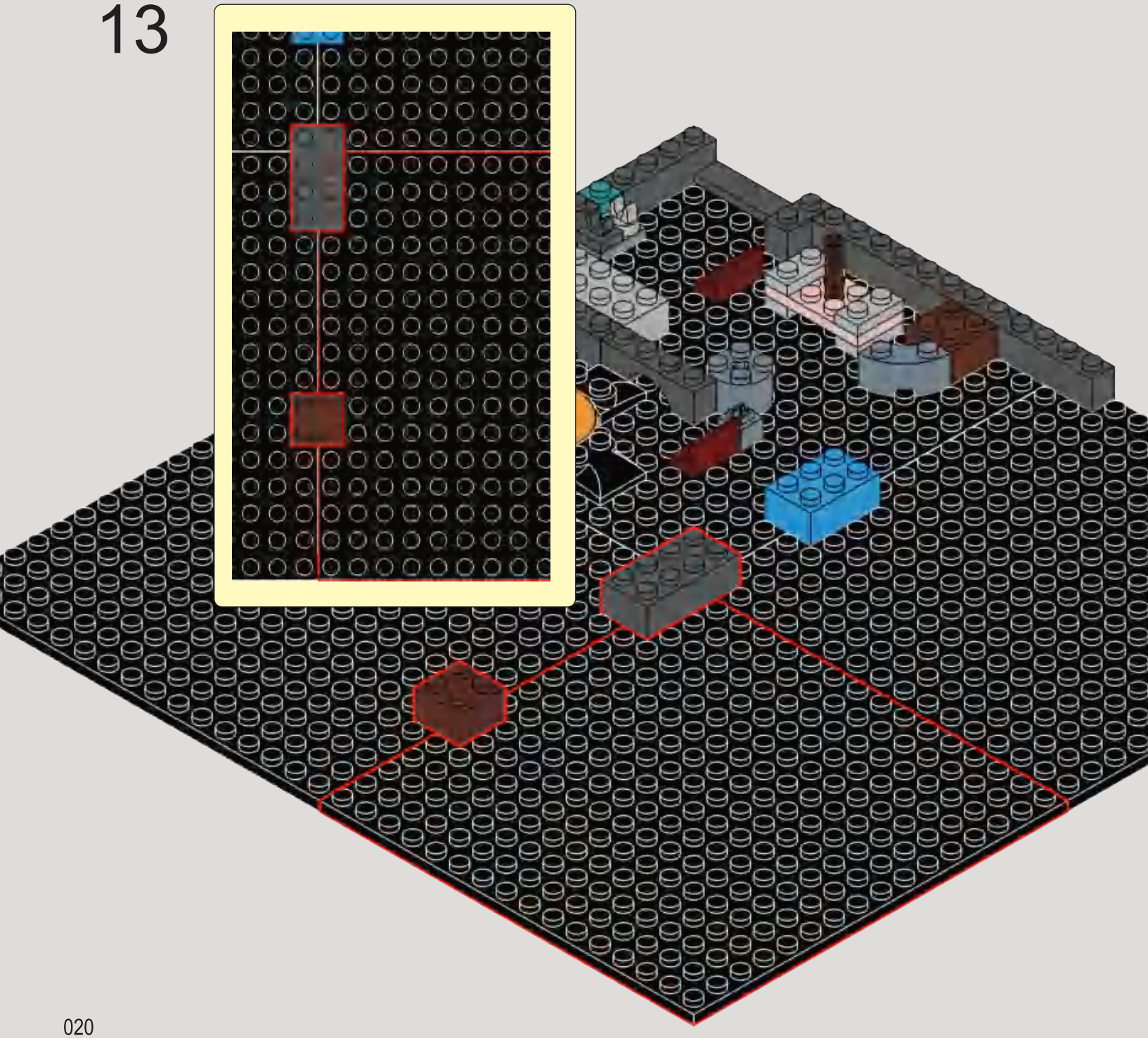

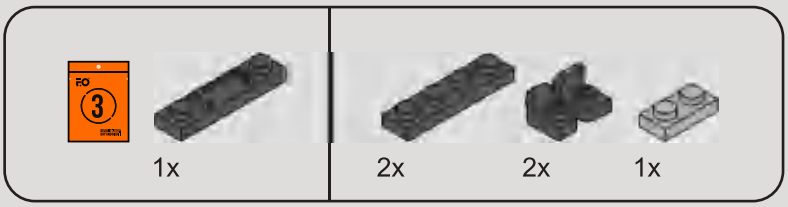

14

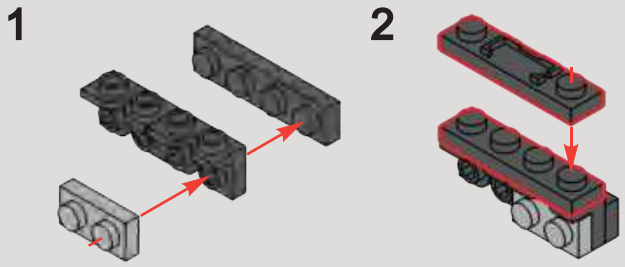

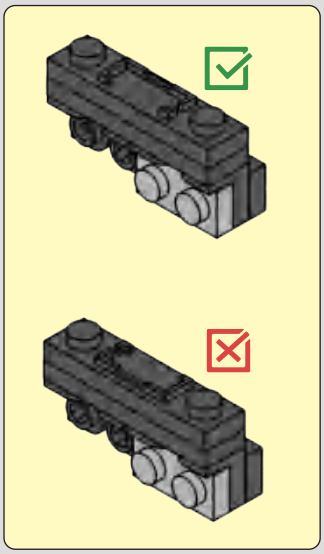

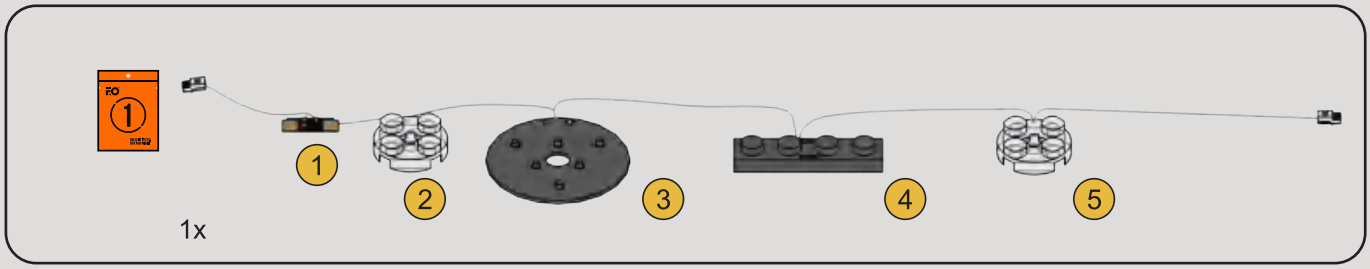

15

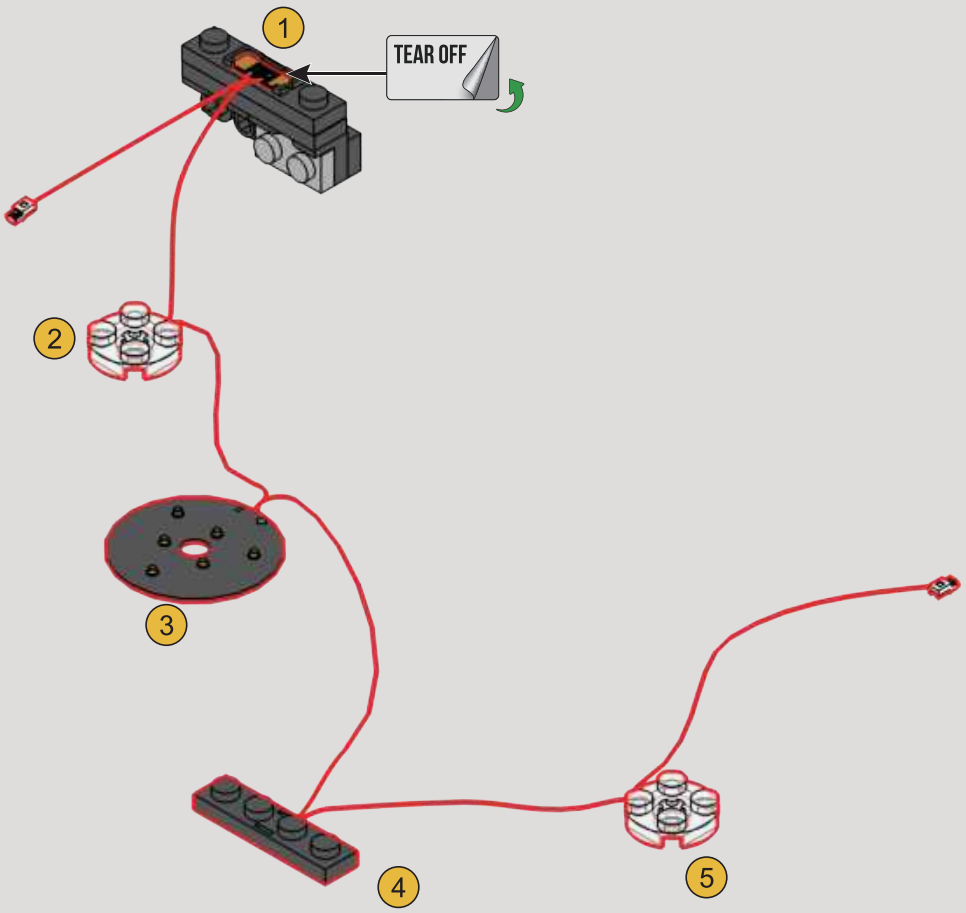

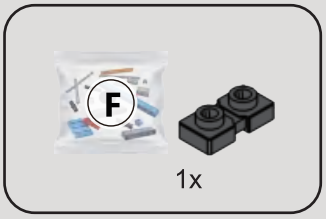

16

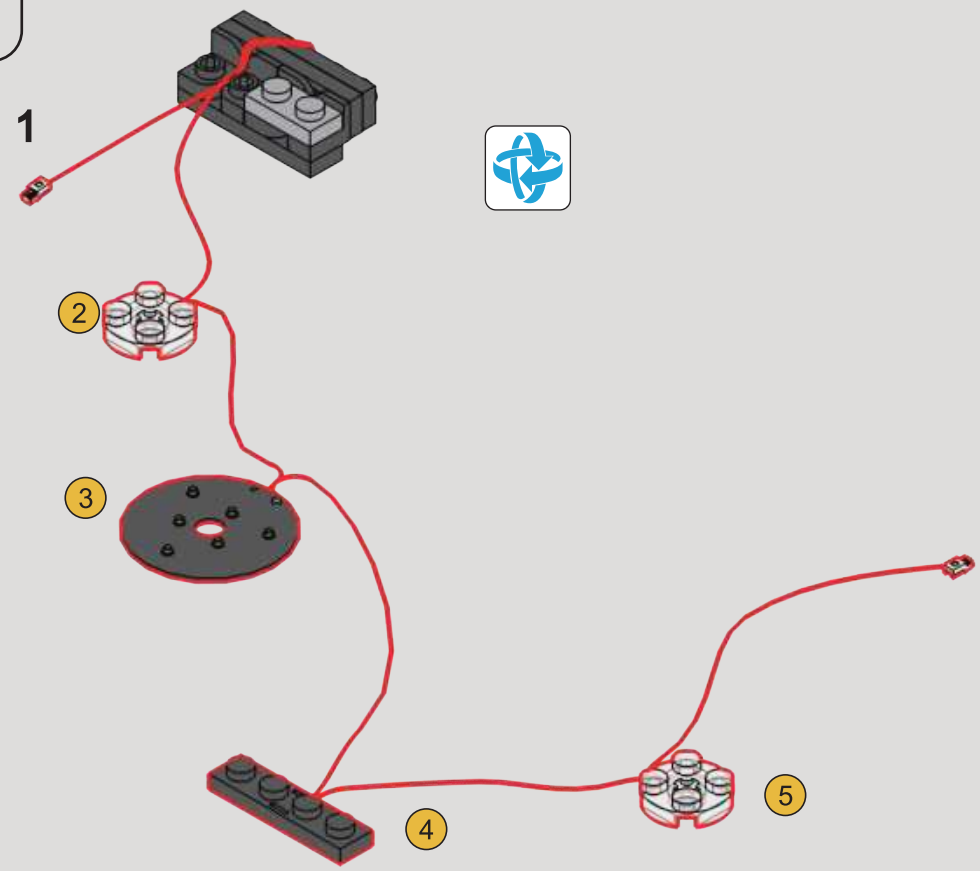

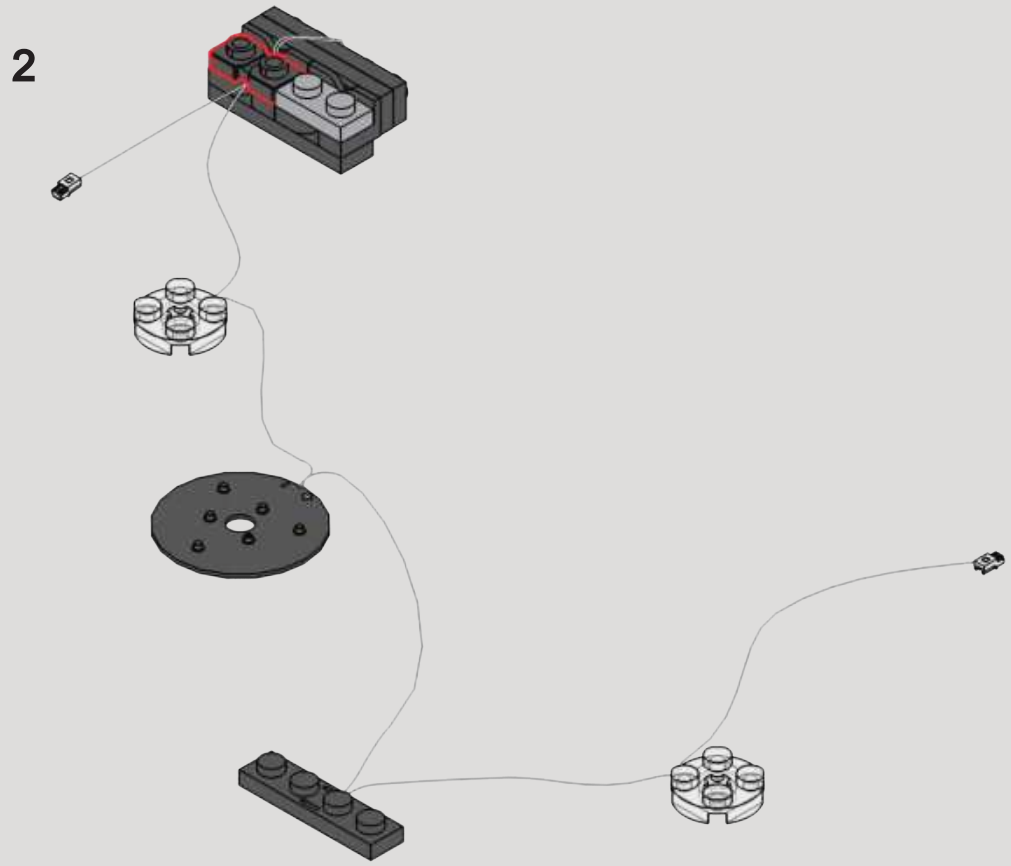

17

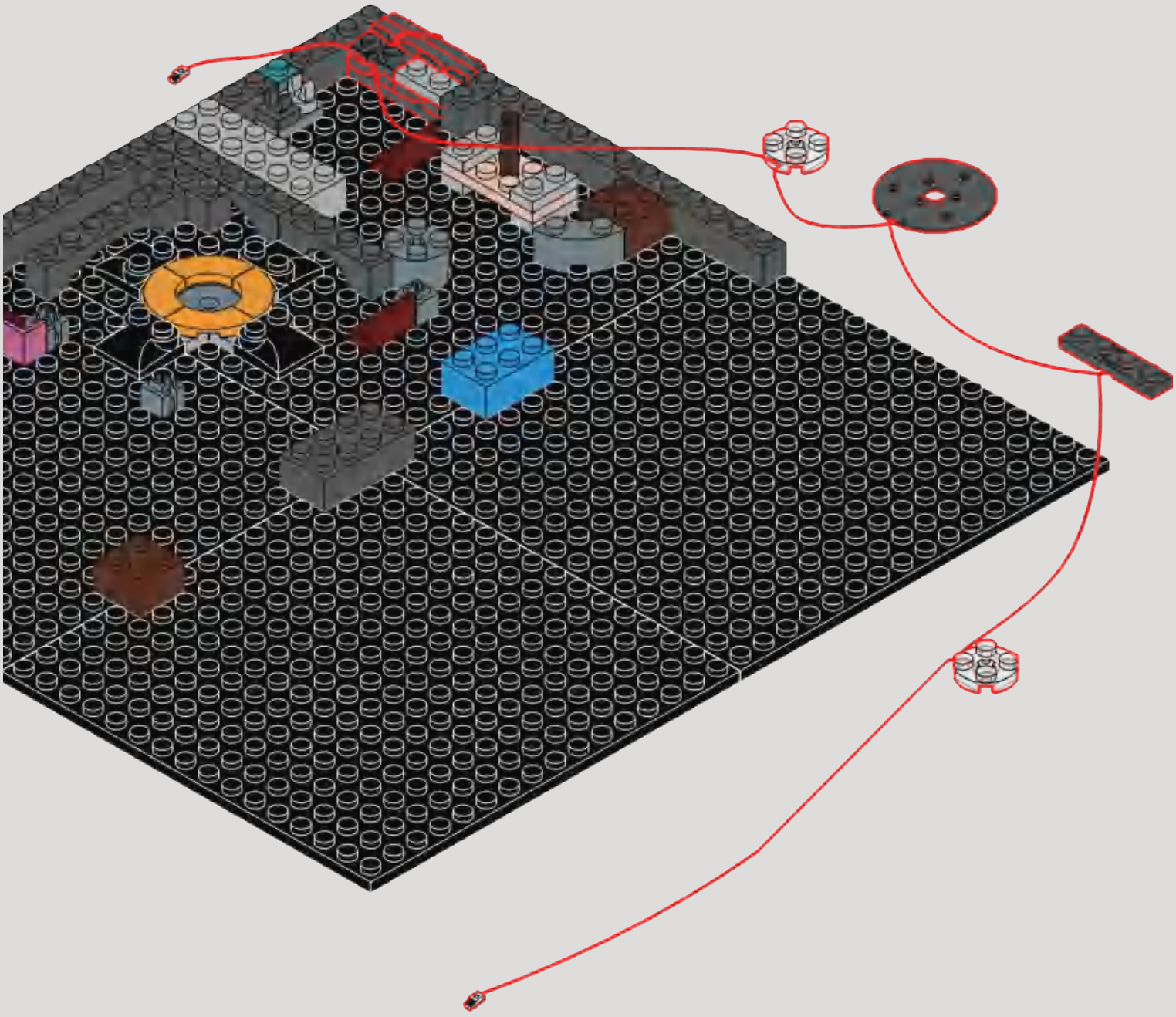

18

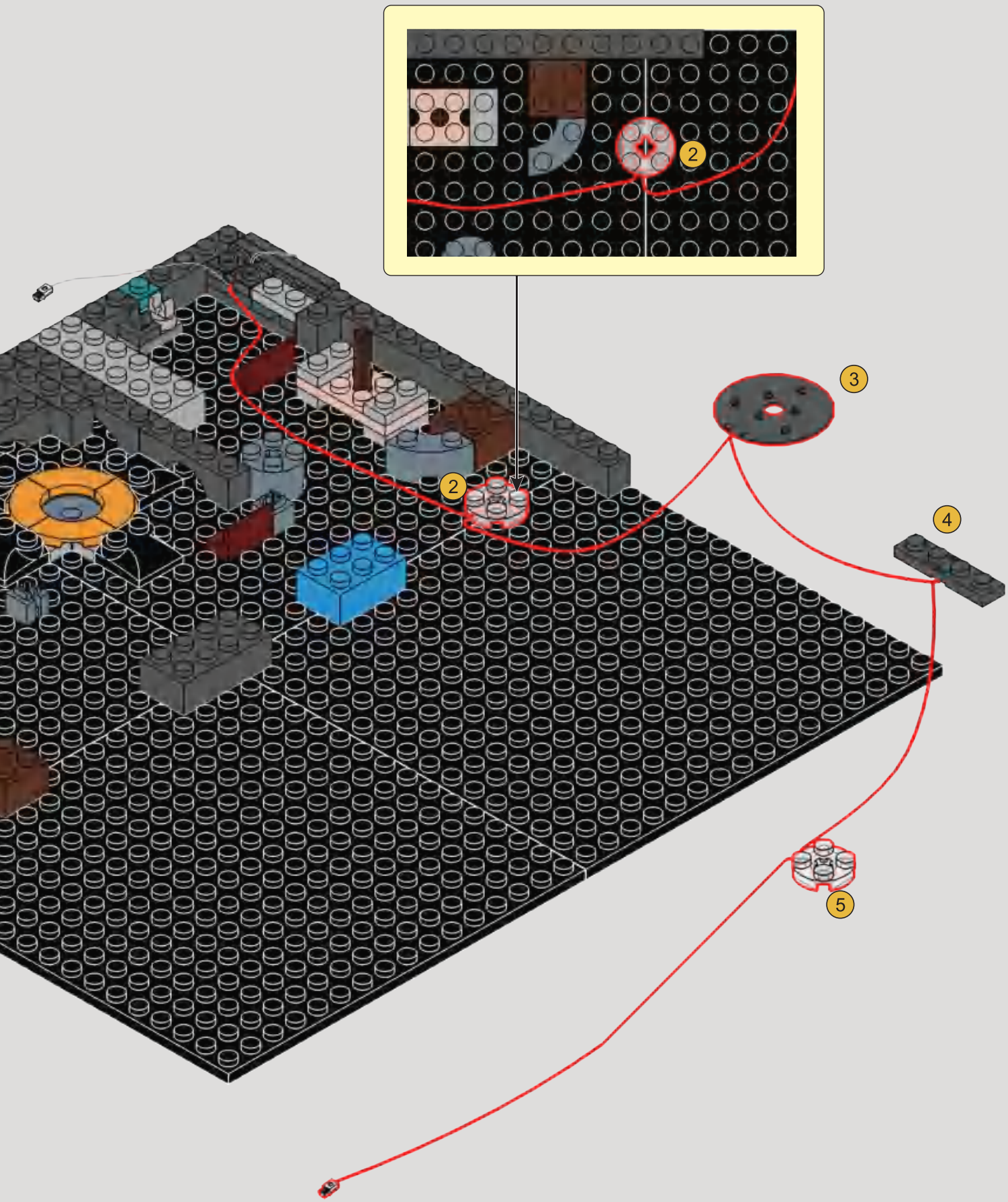

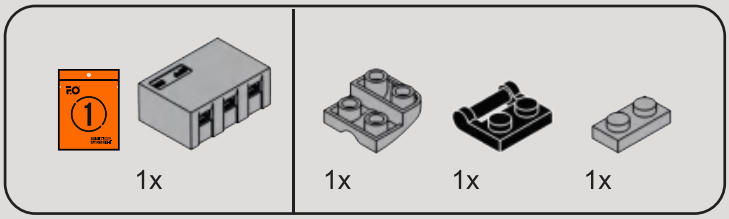

19

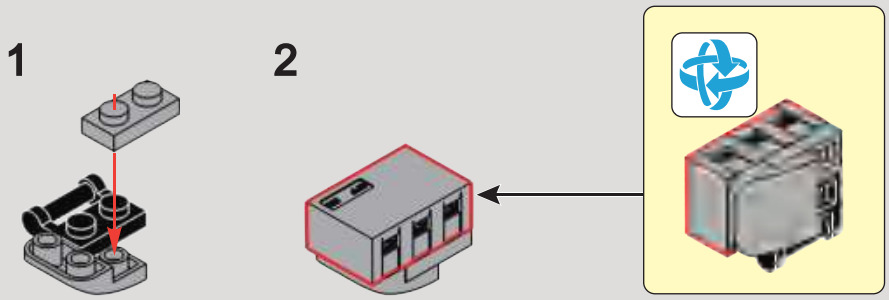

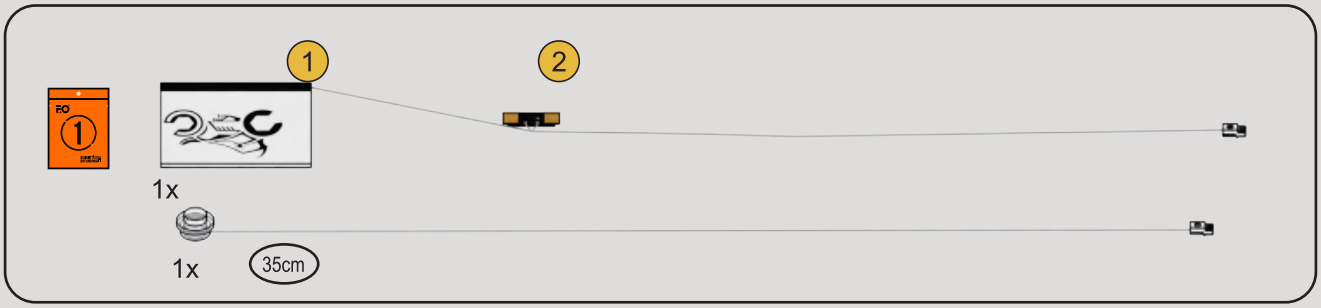

20

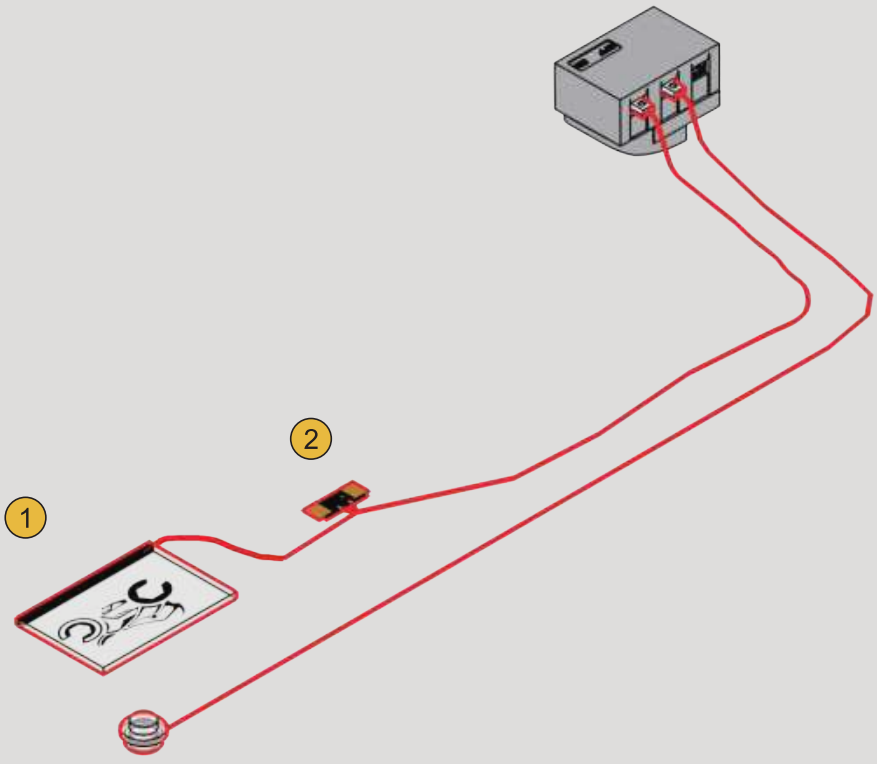

21

1

2

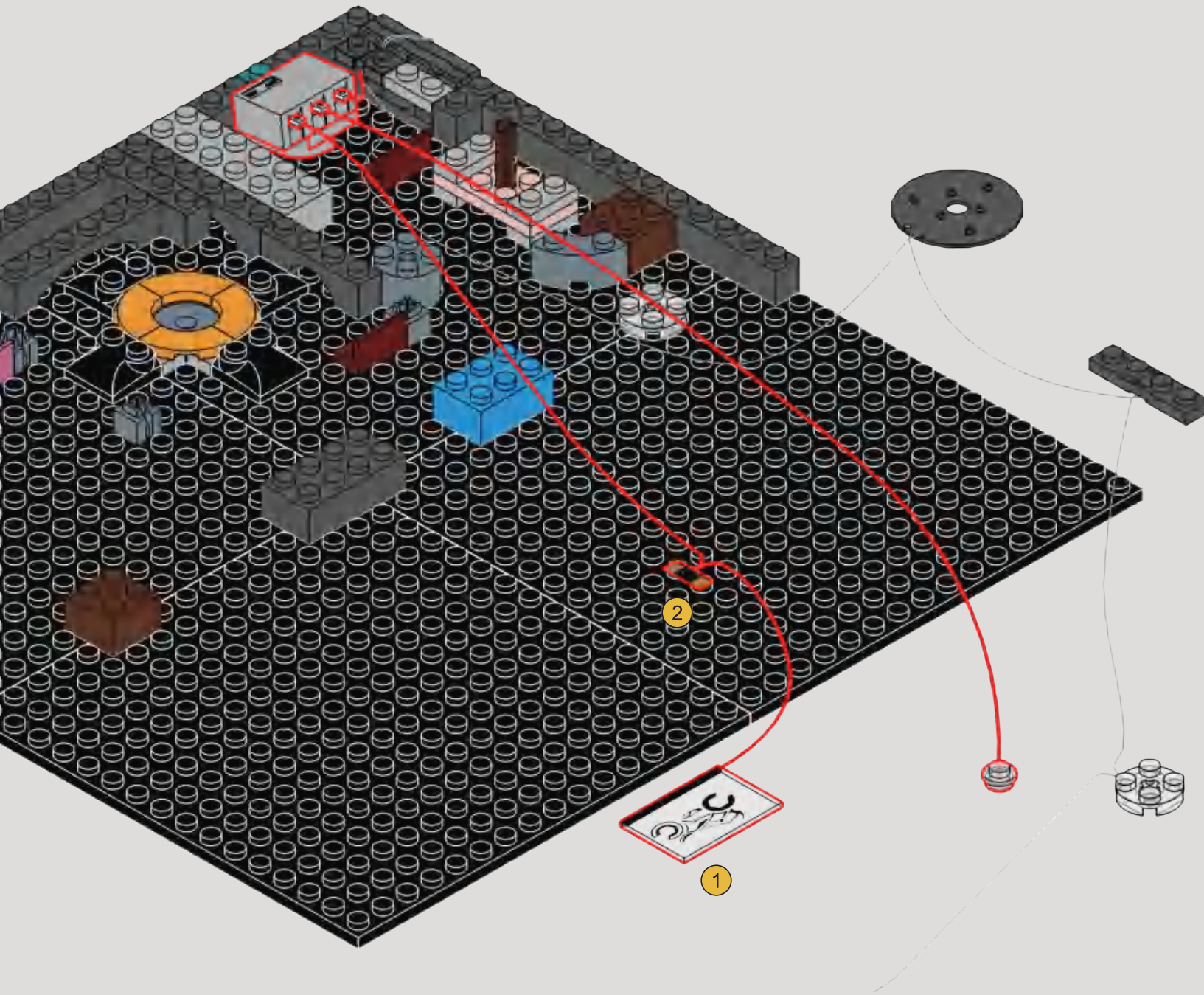

1x

22

1

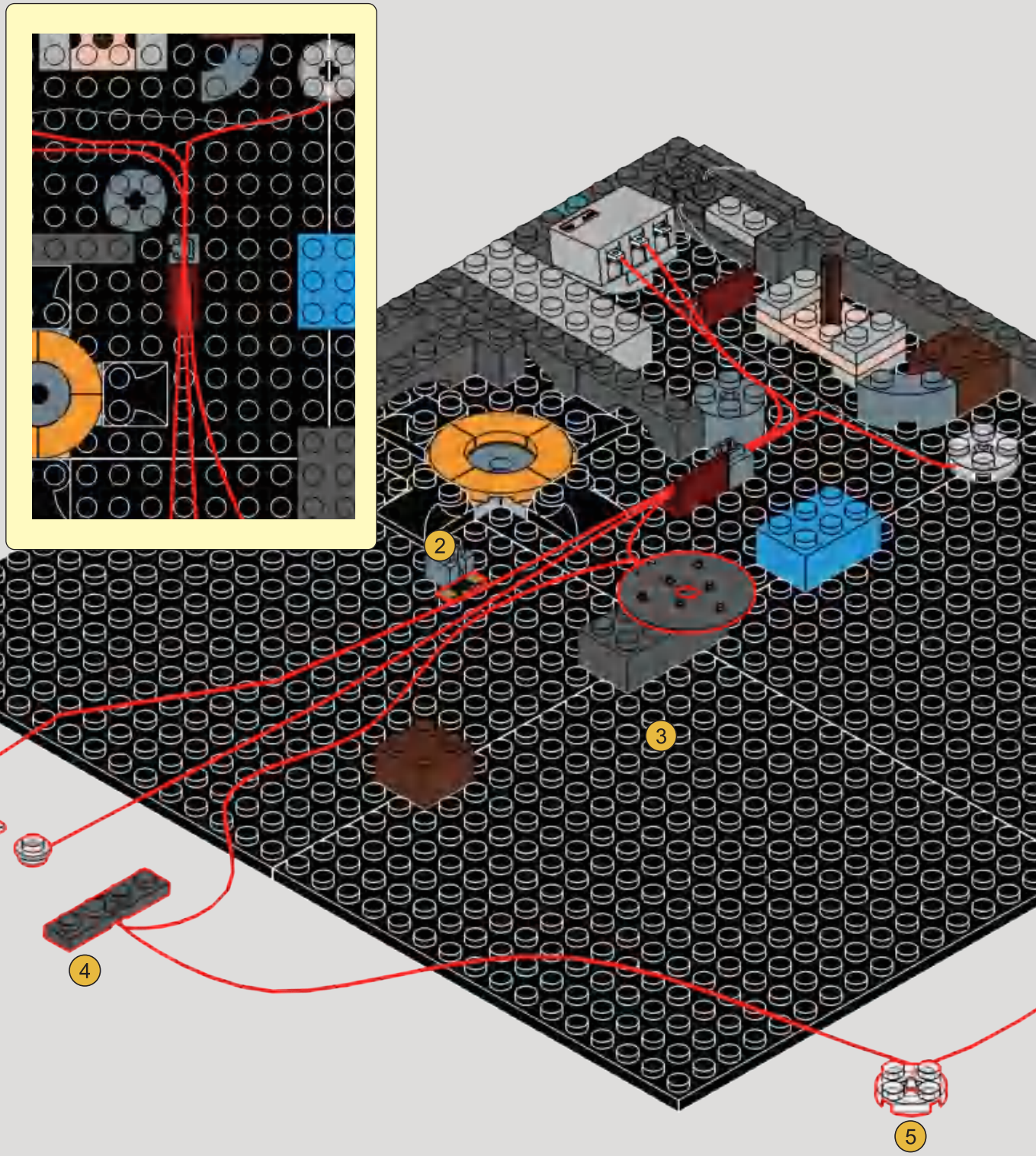

2

1x

23

1

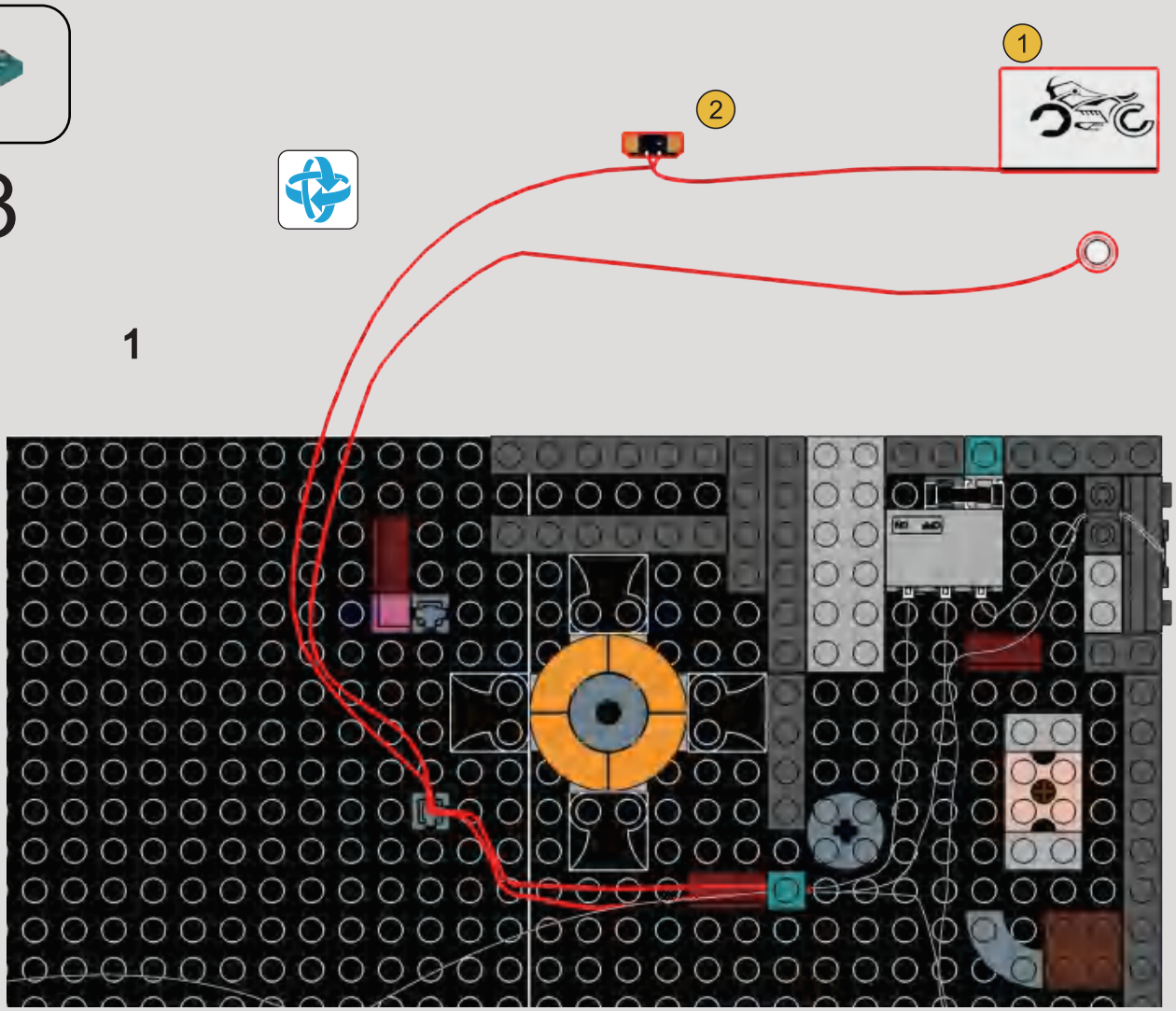

2

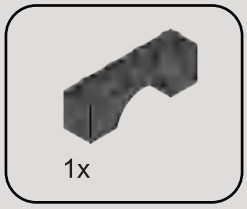

24

1x

25

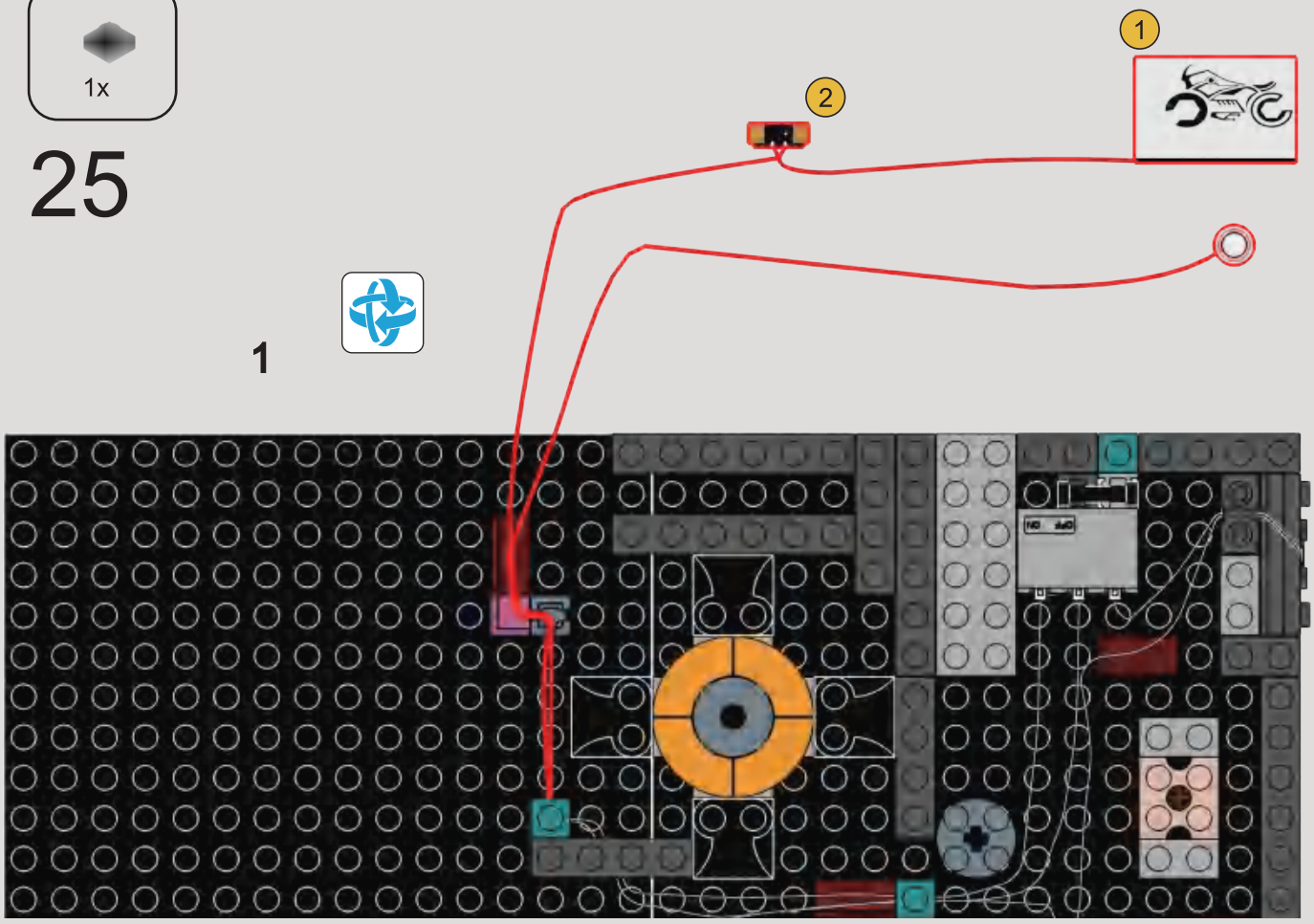

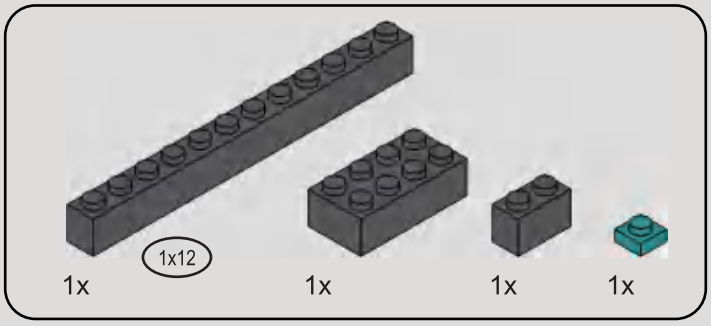

26

27

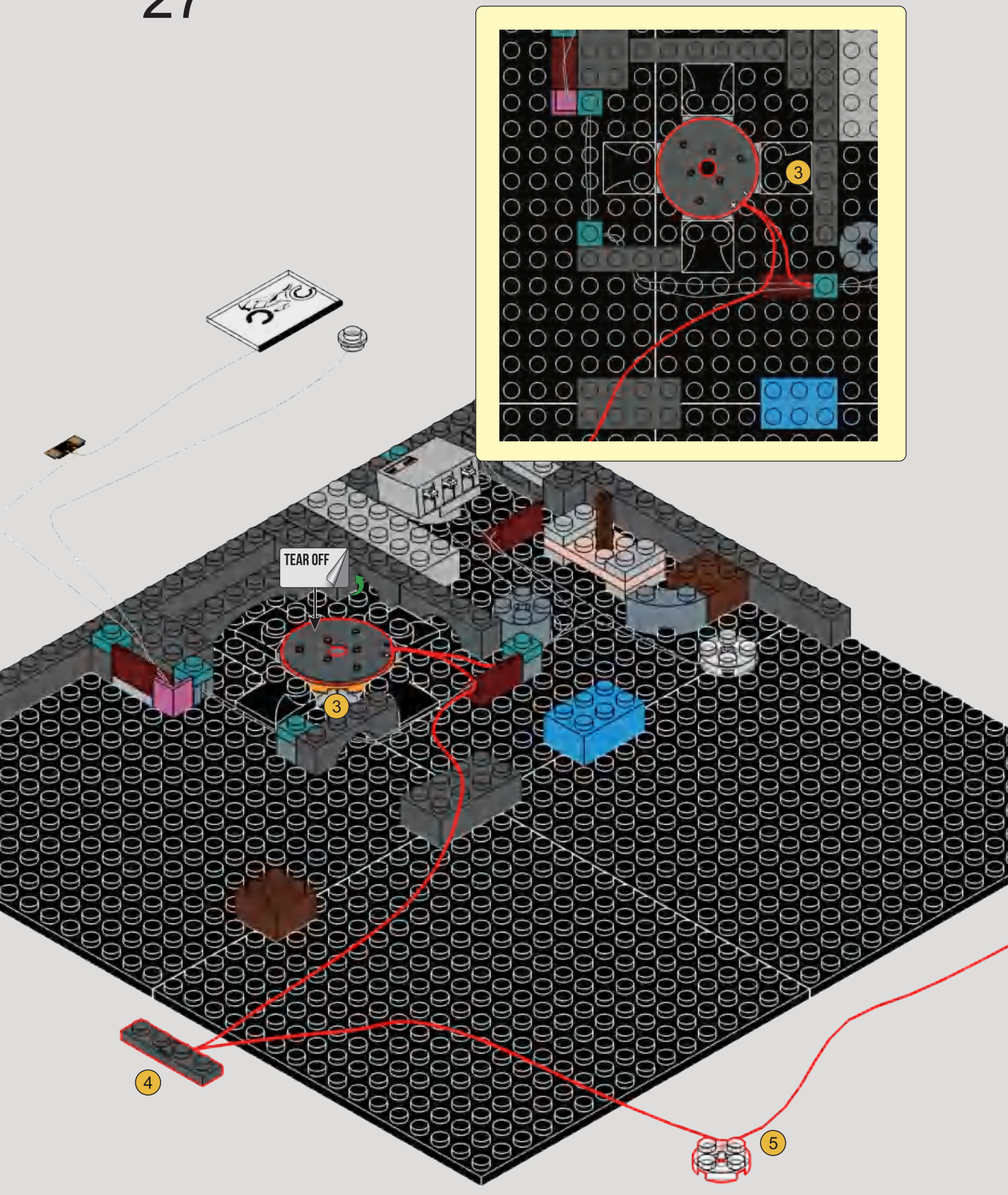

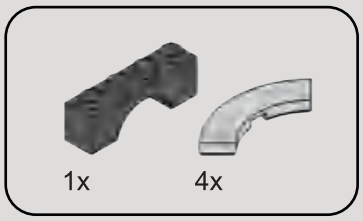

28

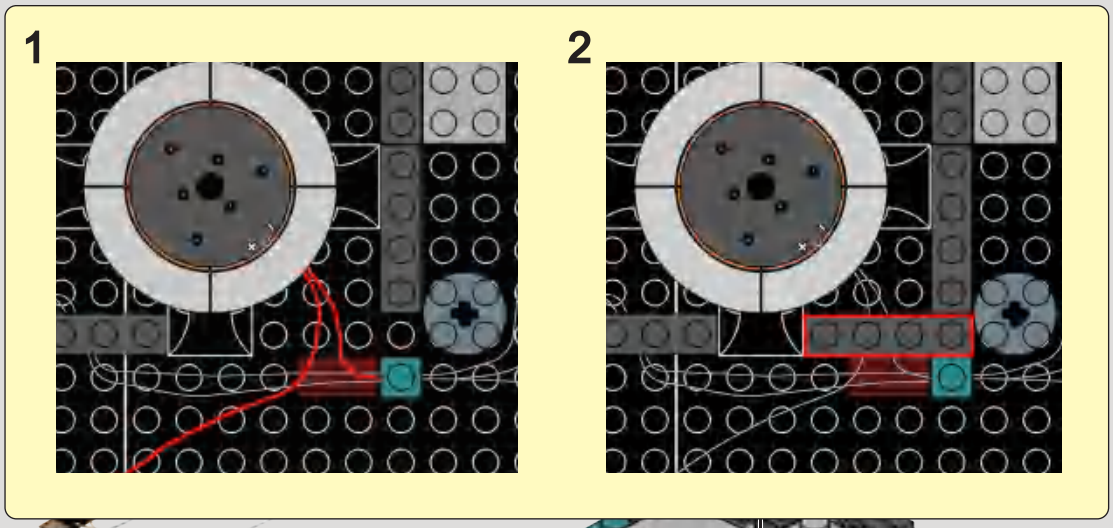

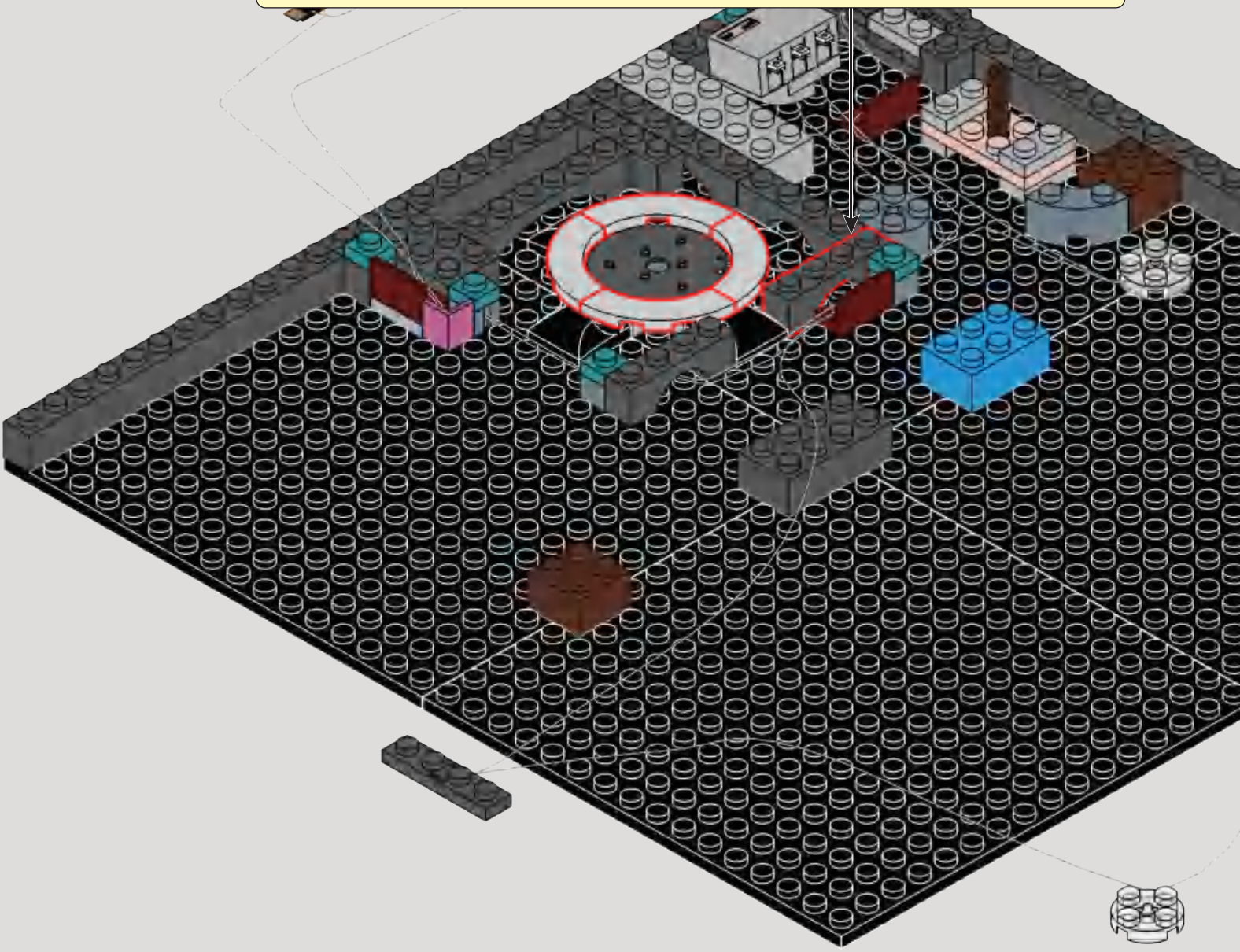

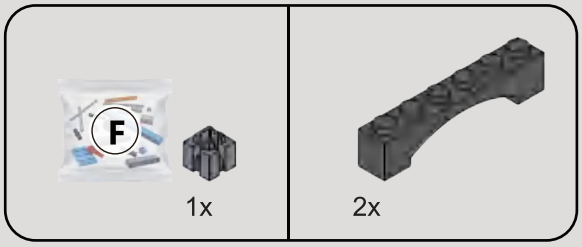

29

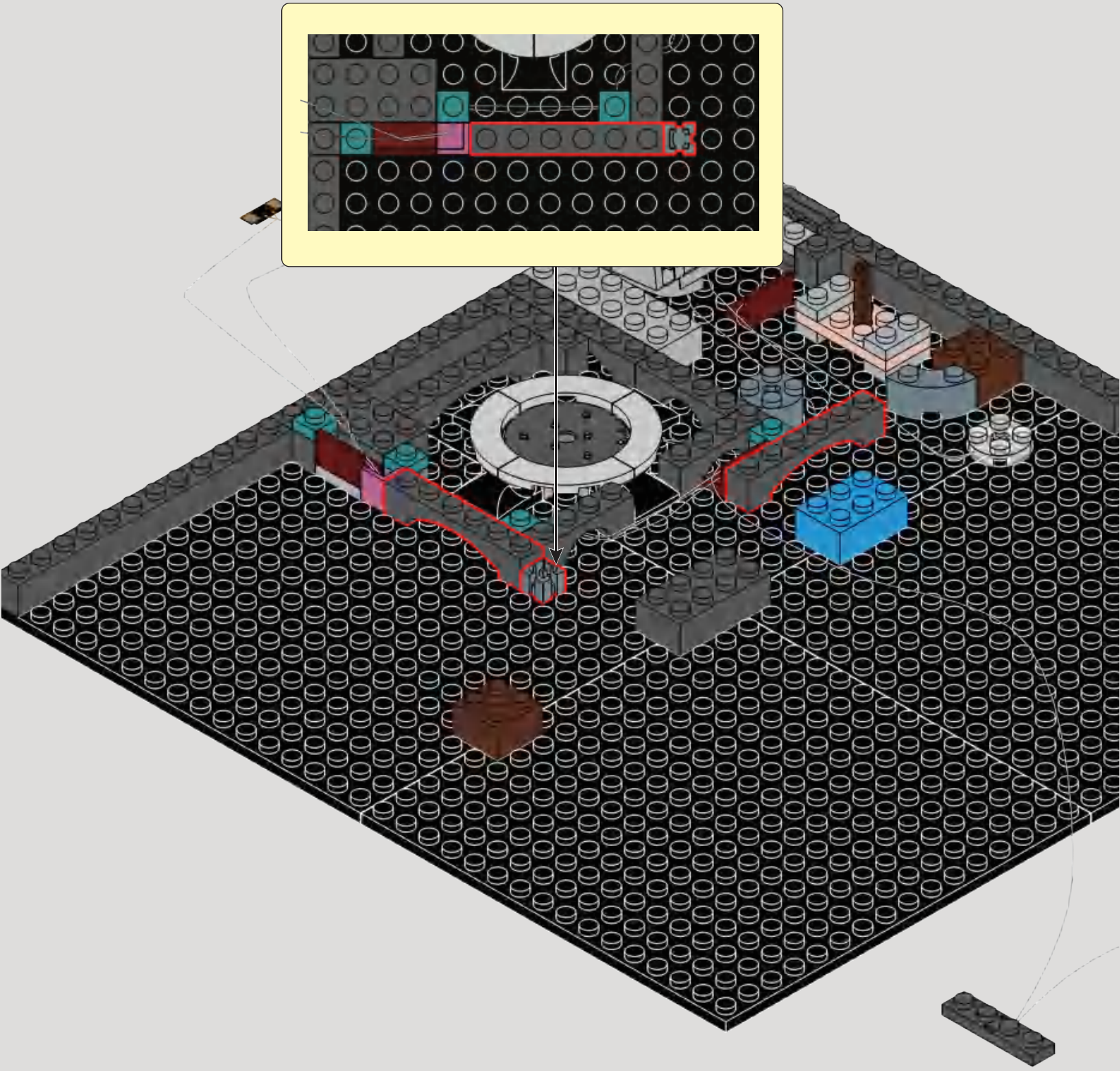

1x

30

1

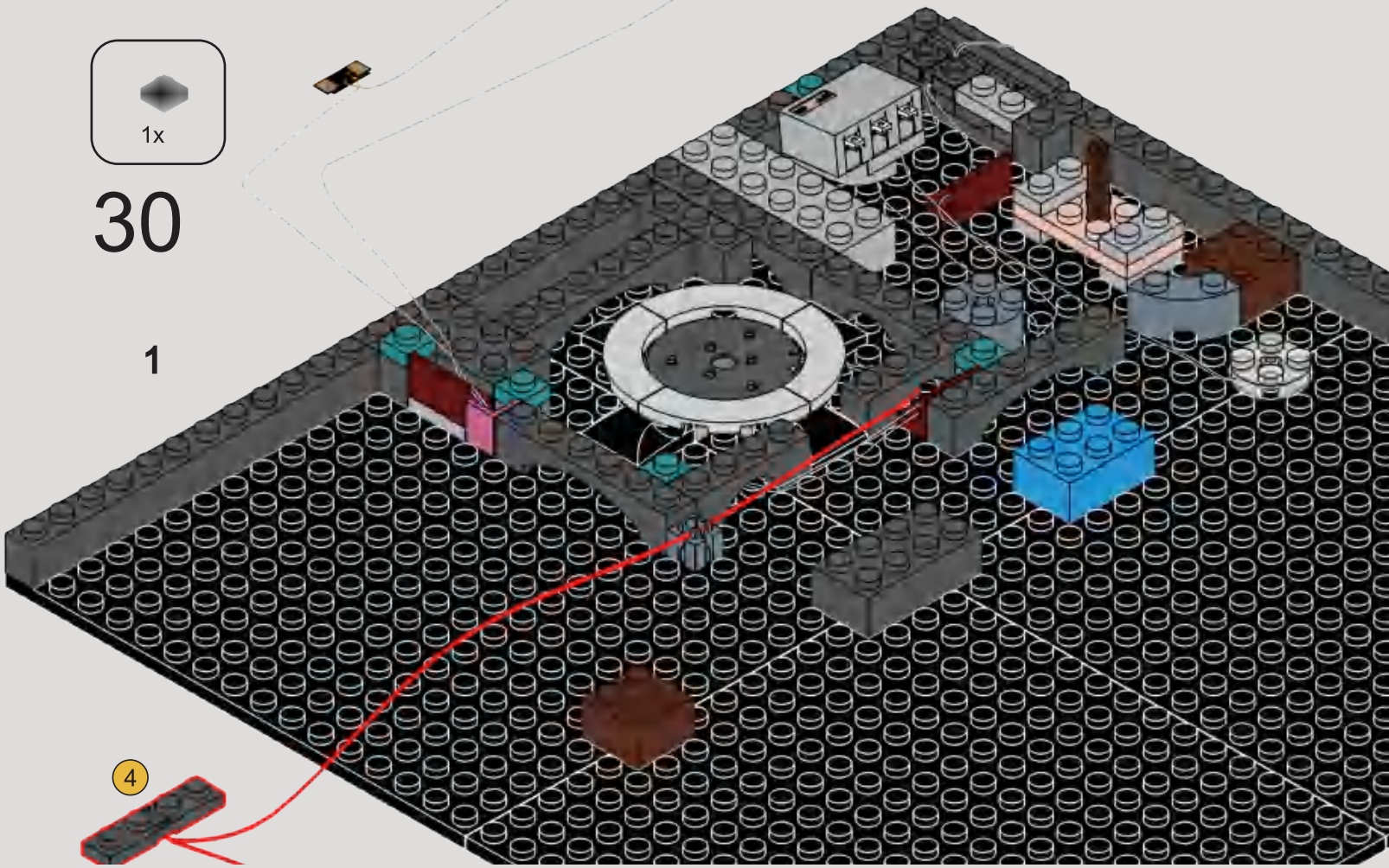

2

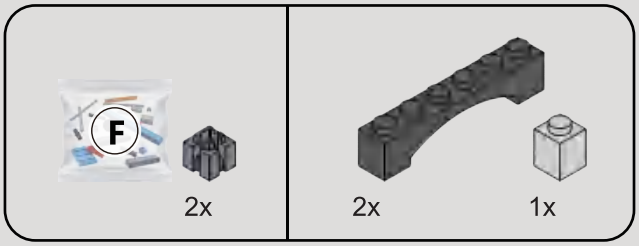

31

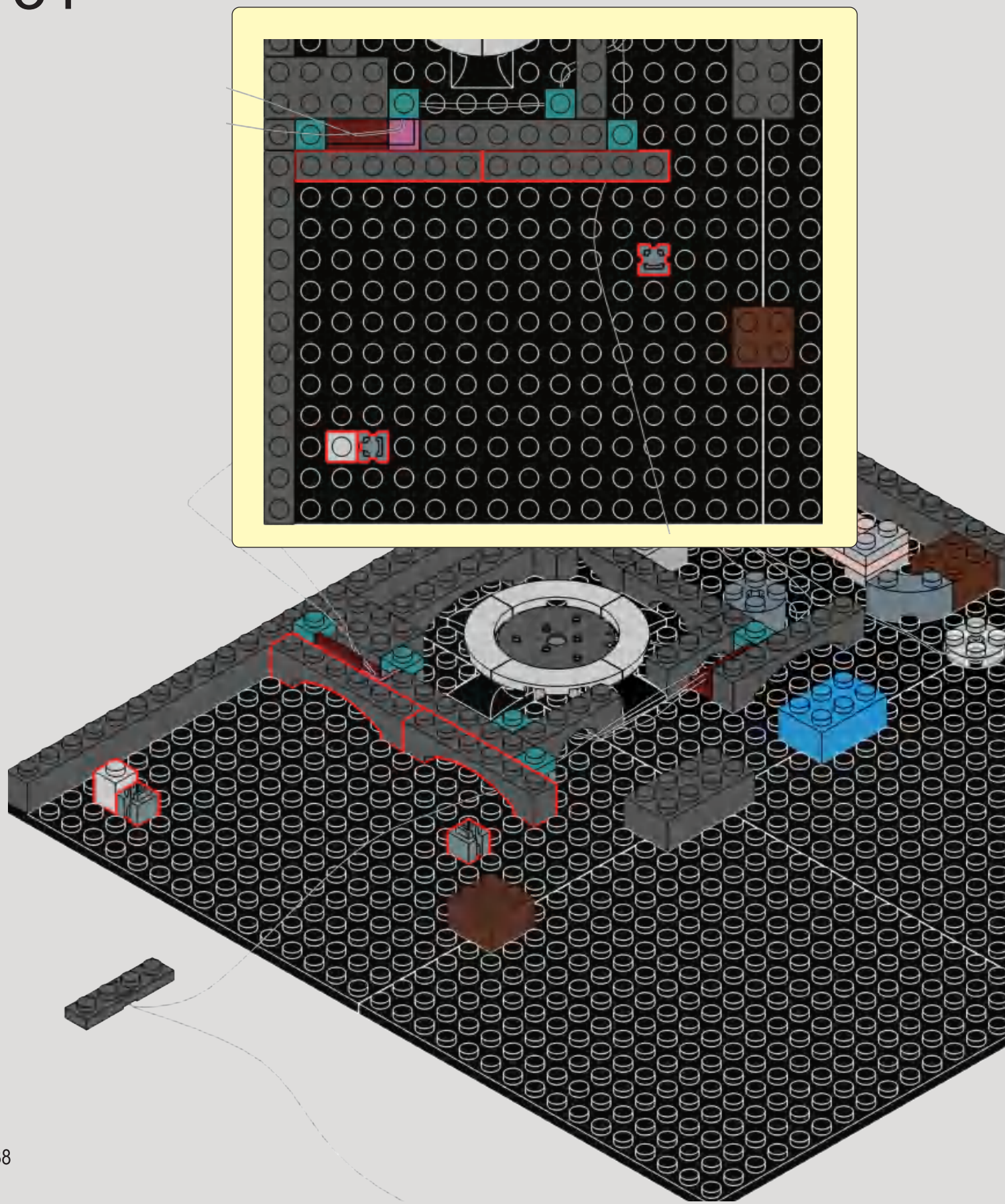

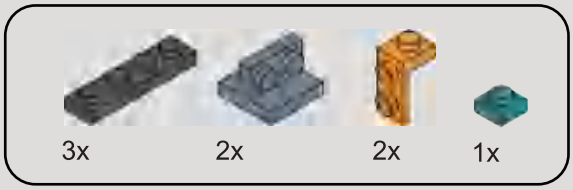

32

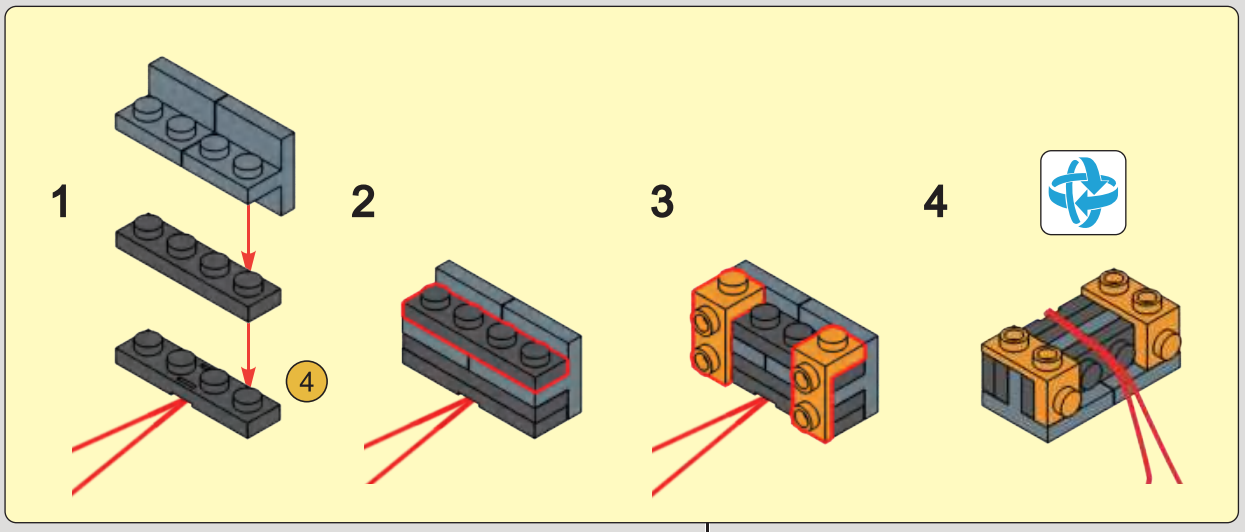

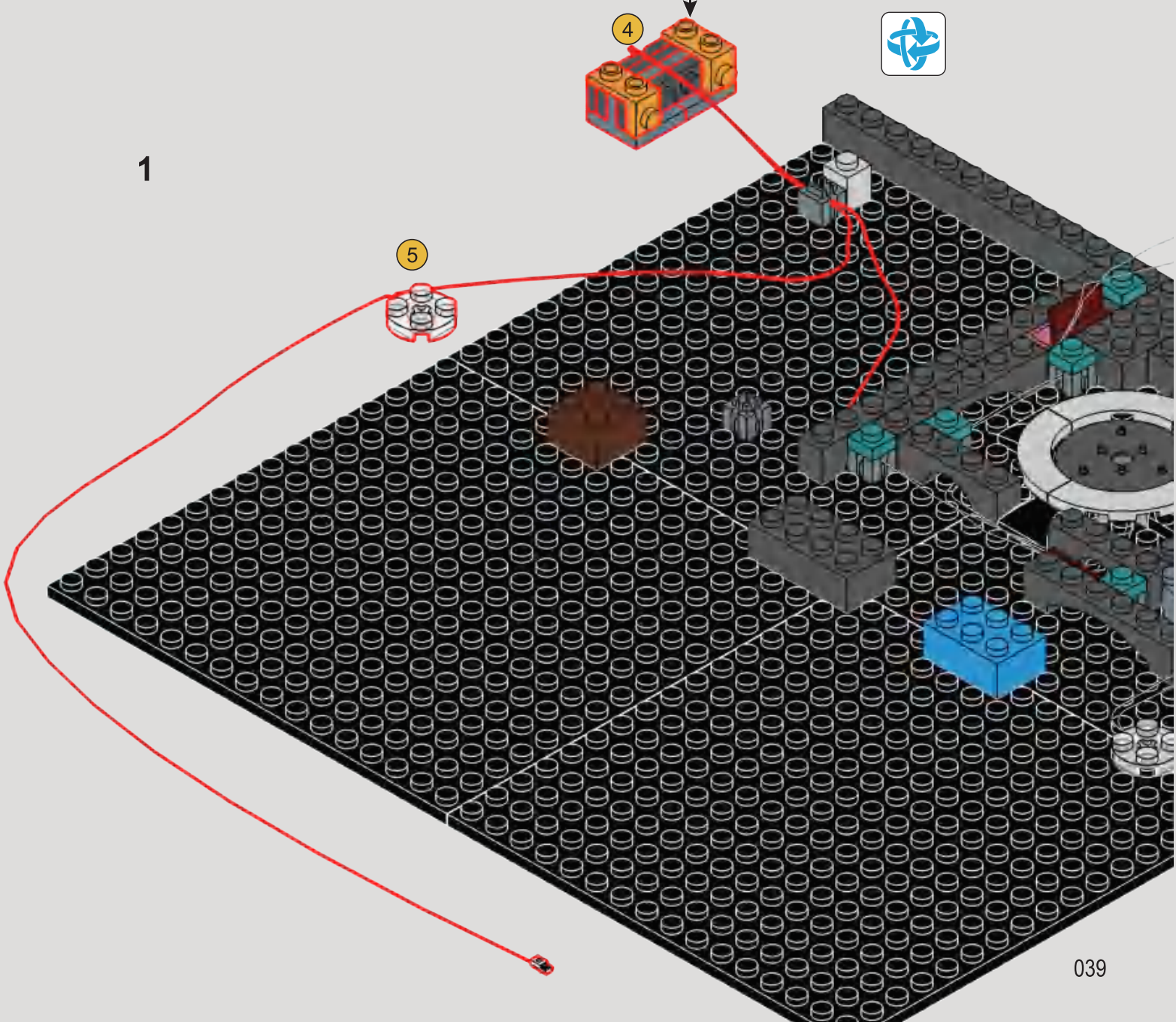

2

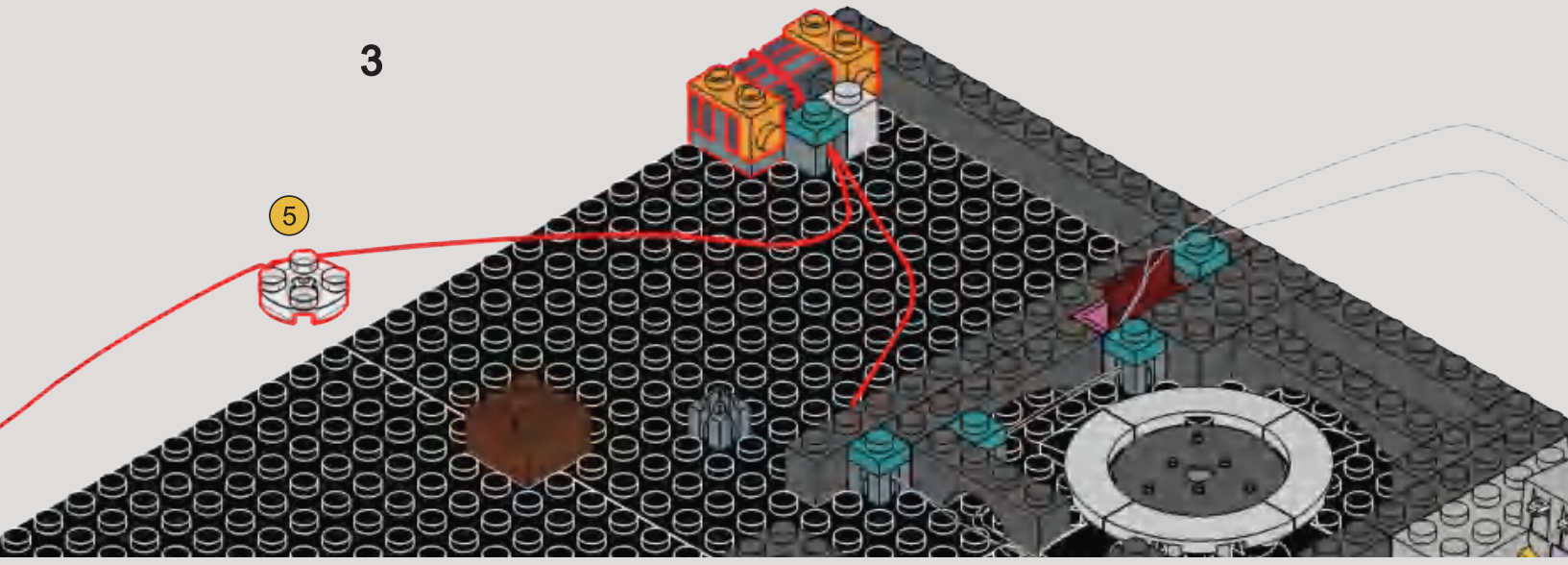

3

4

1x

33

5

1

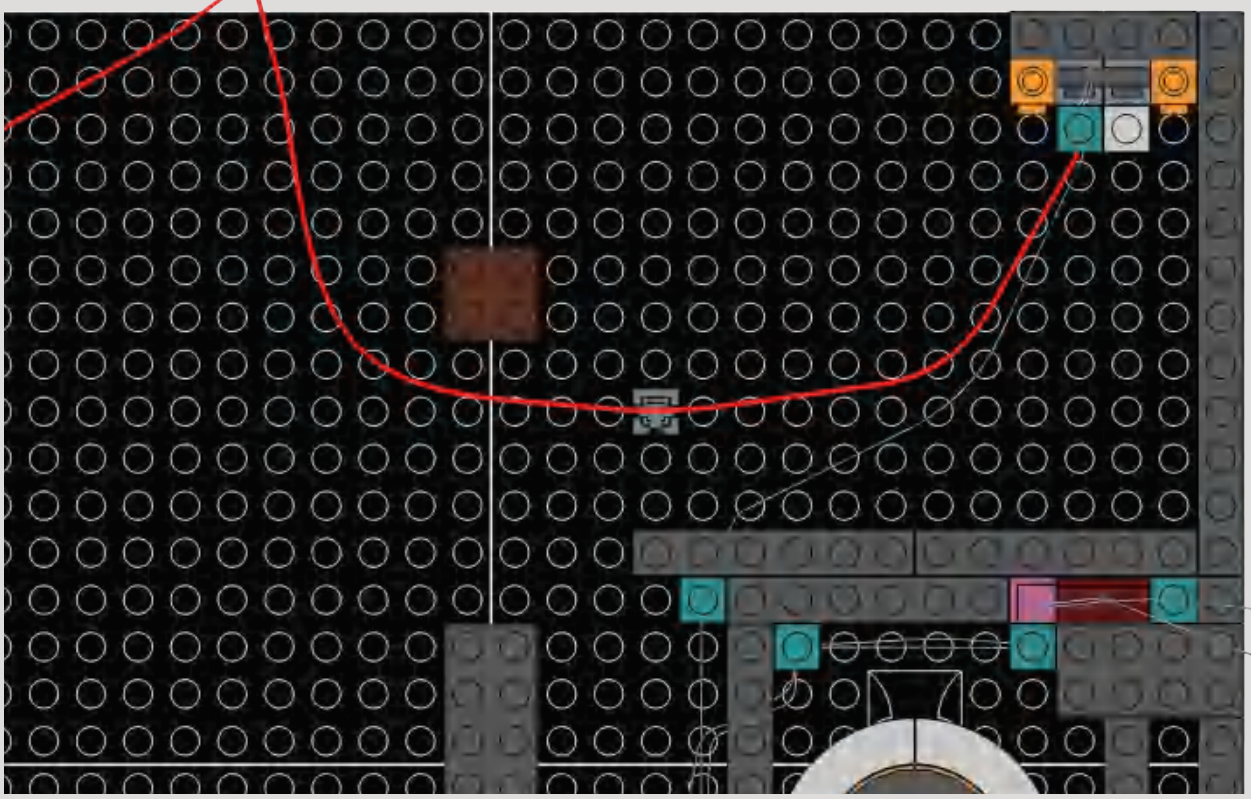

2

3

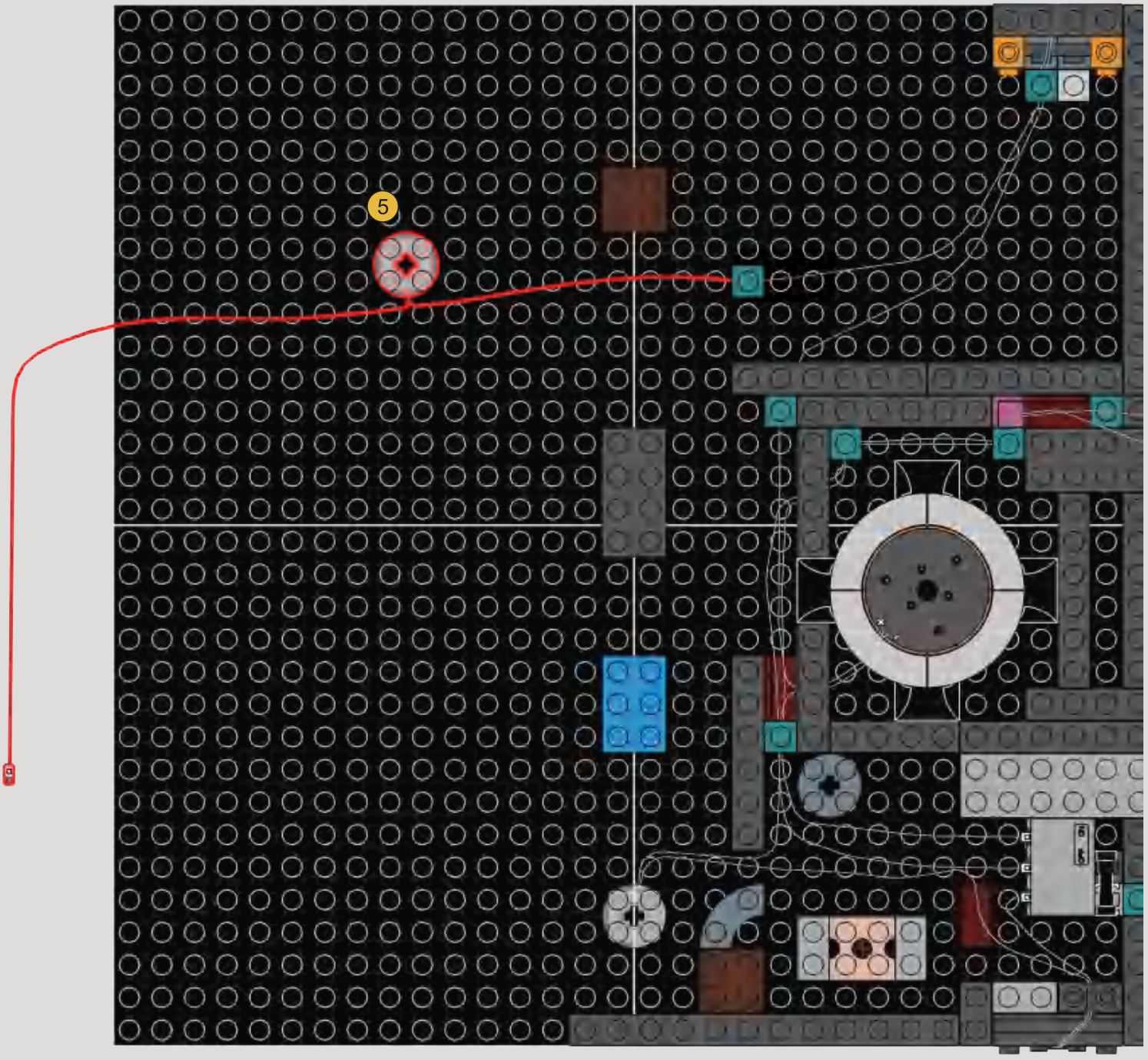

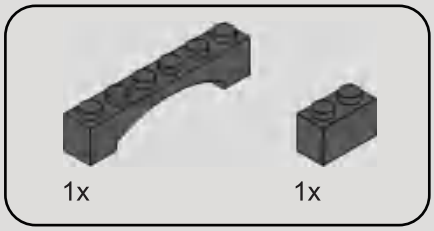

34

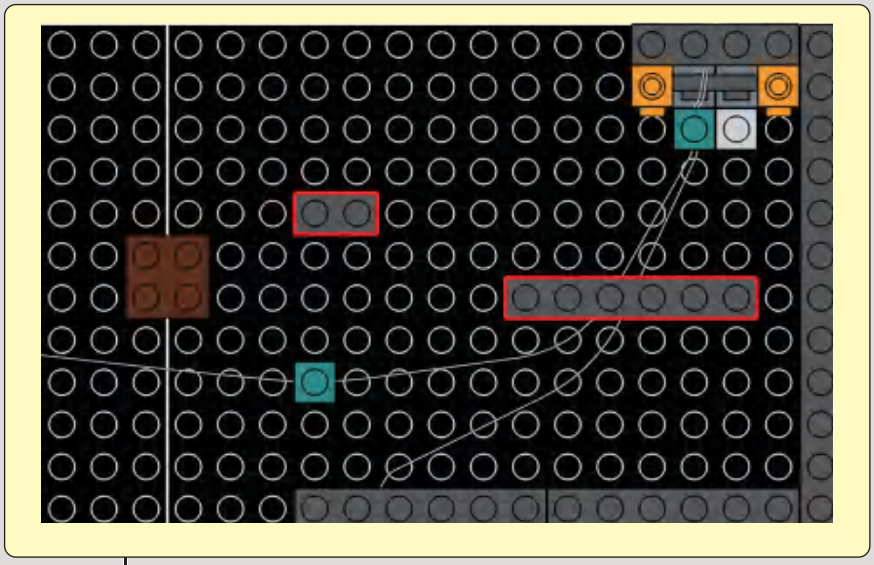

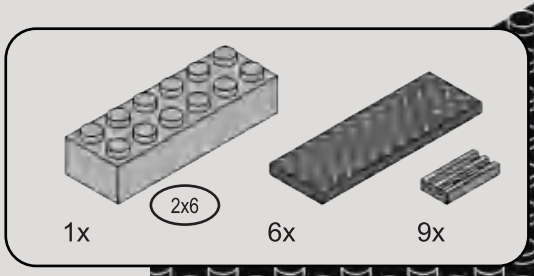

35

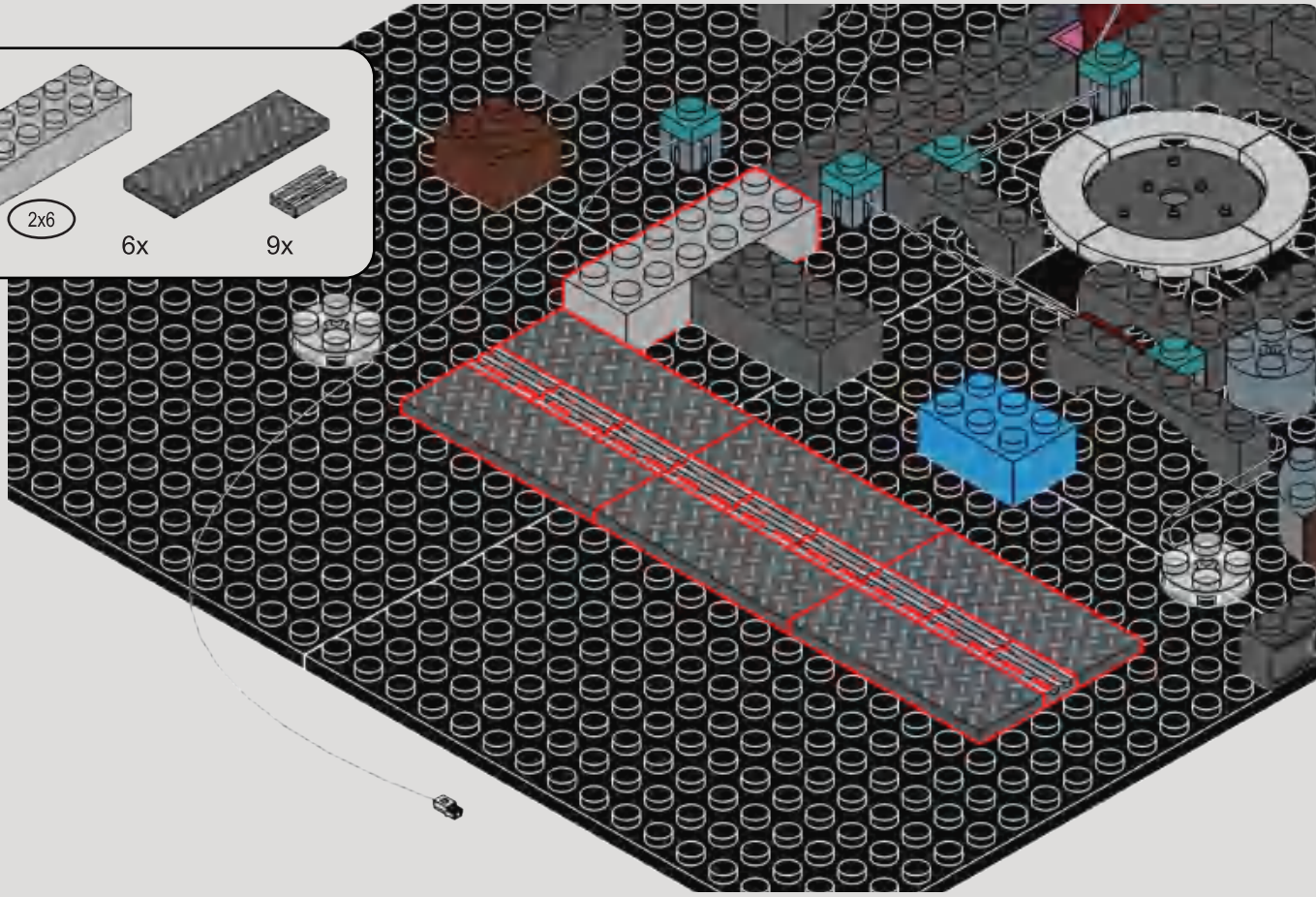

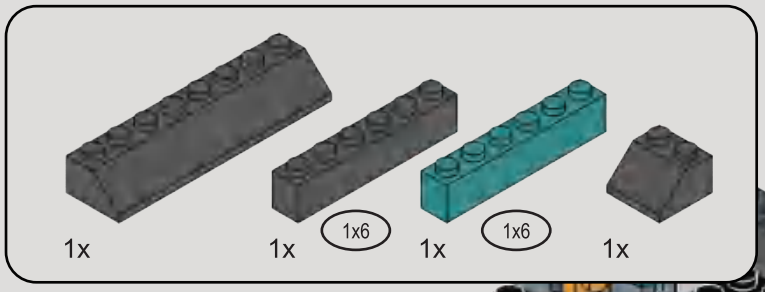

36

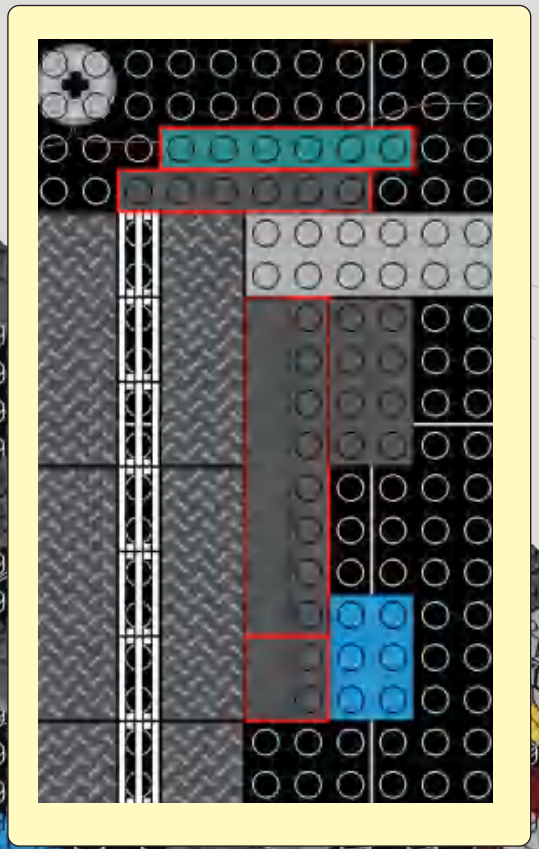

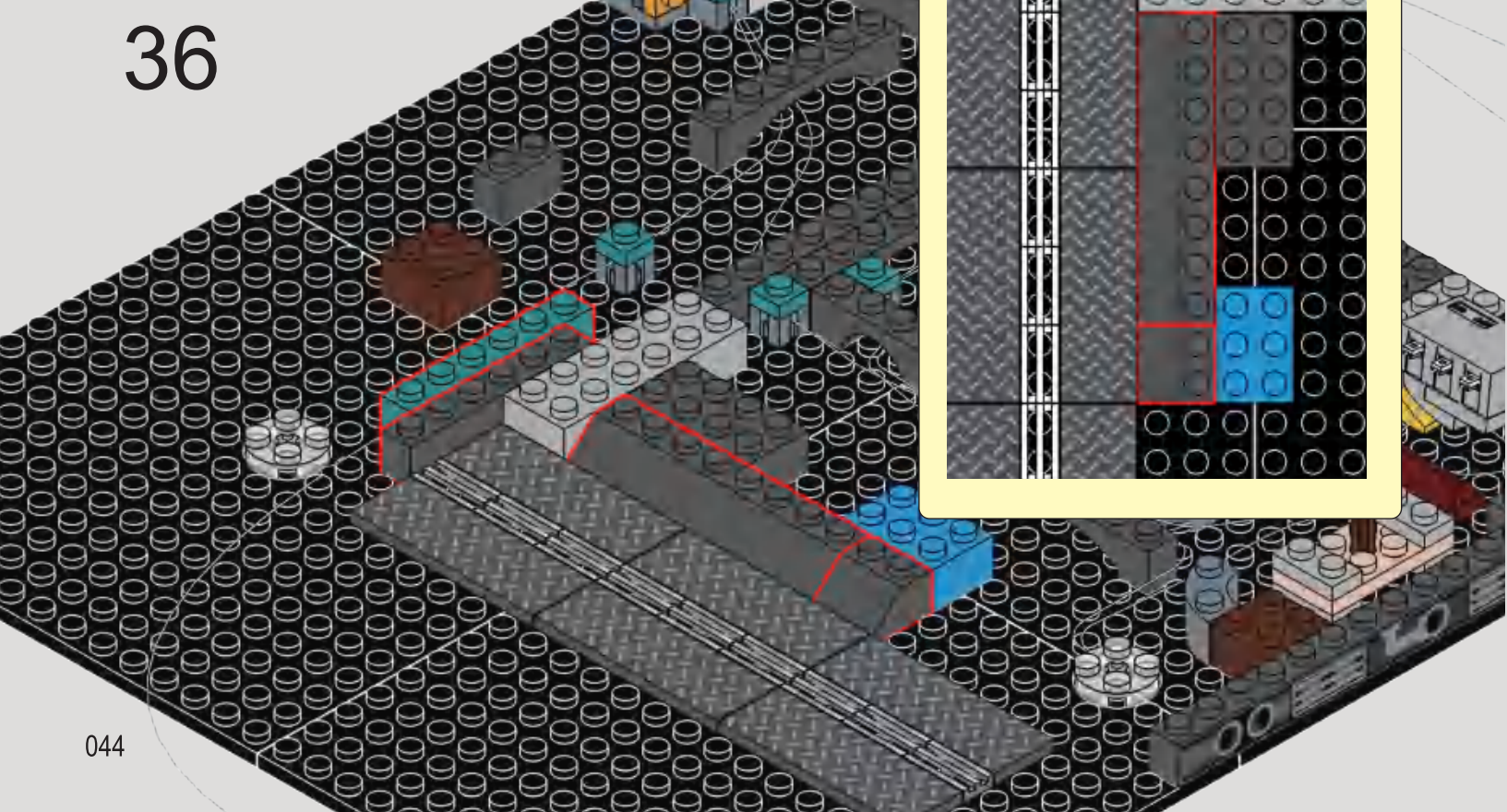

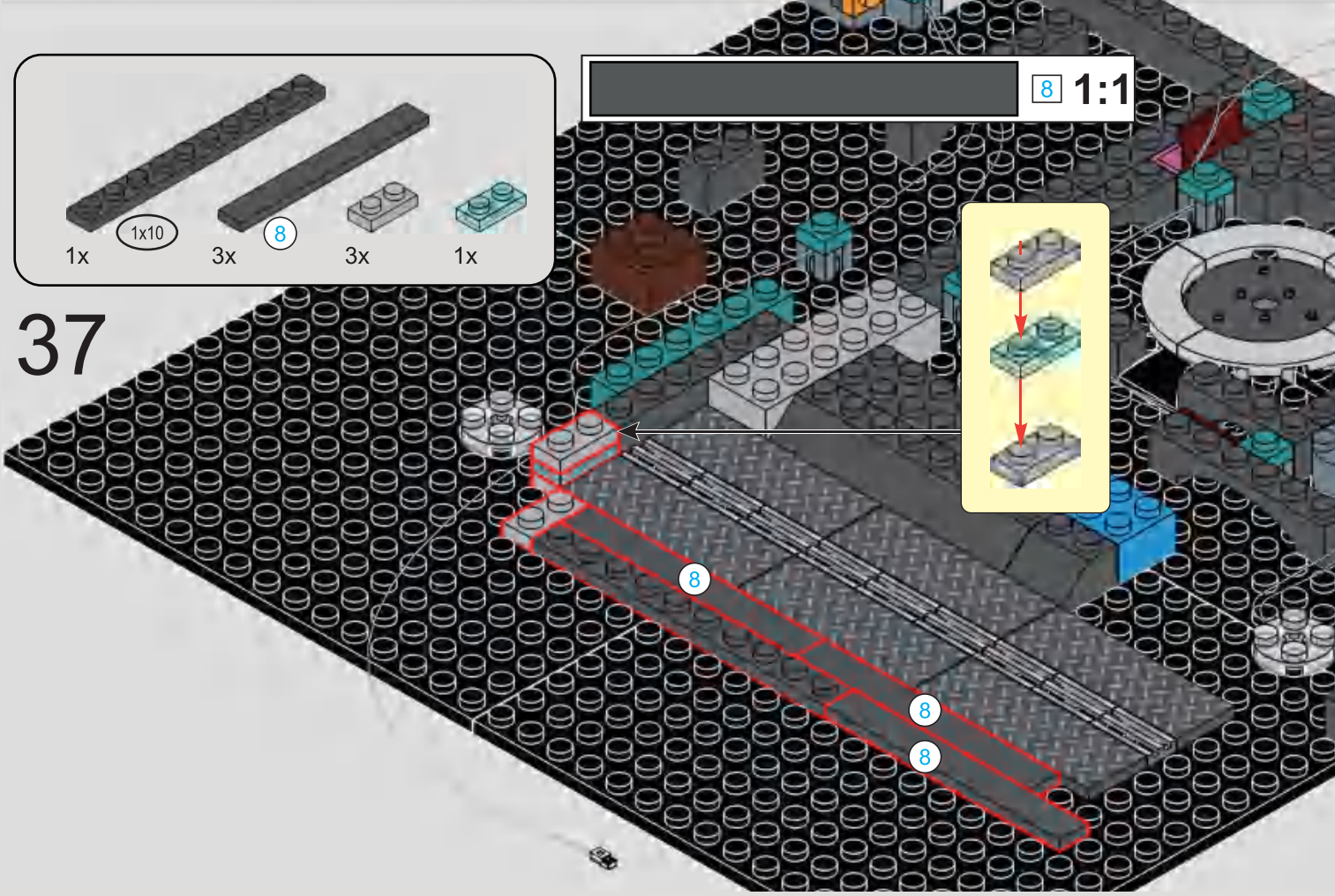

37

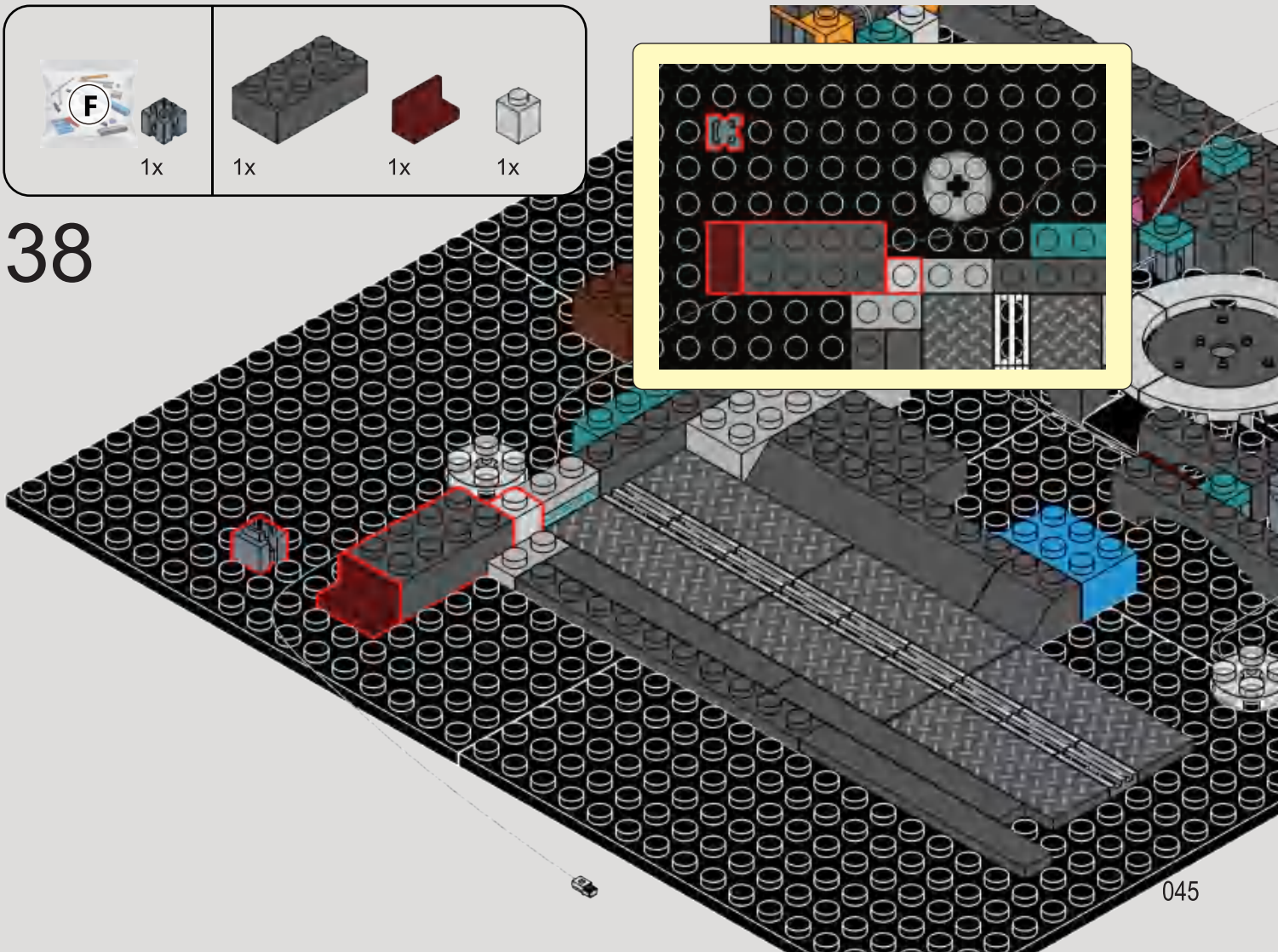

38

39

1

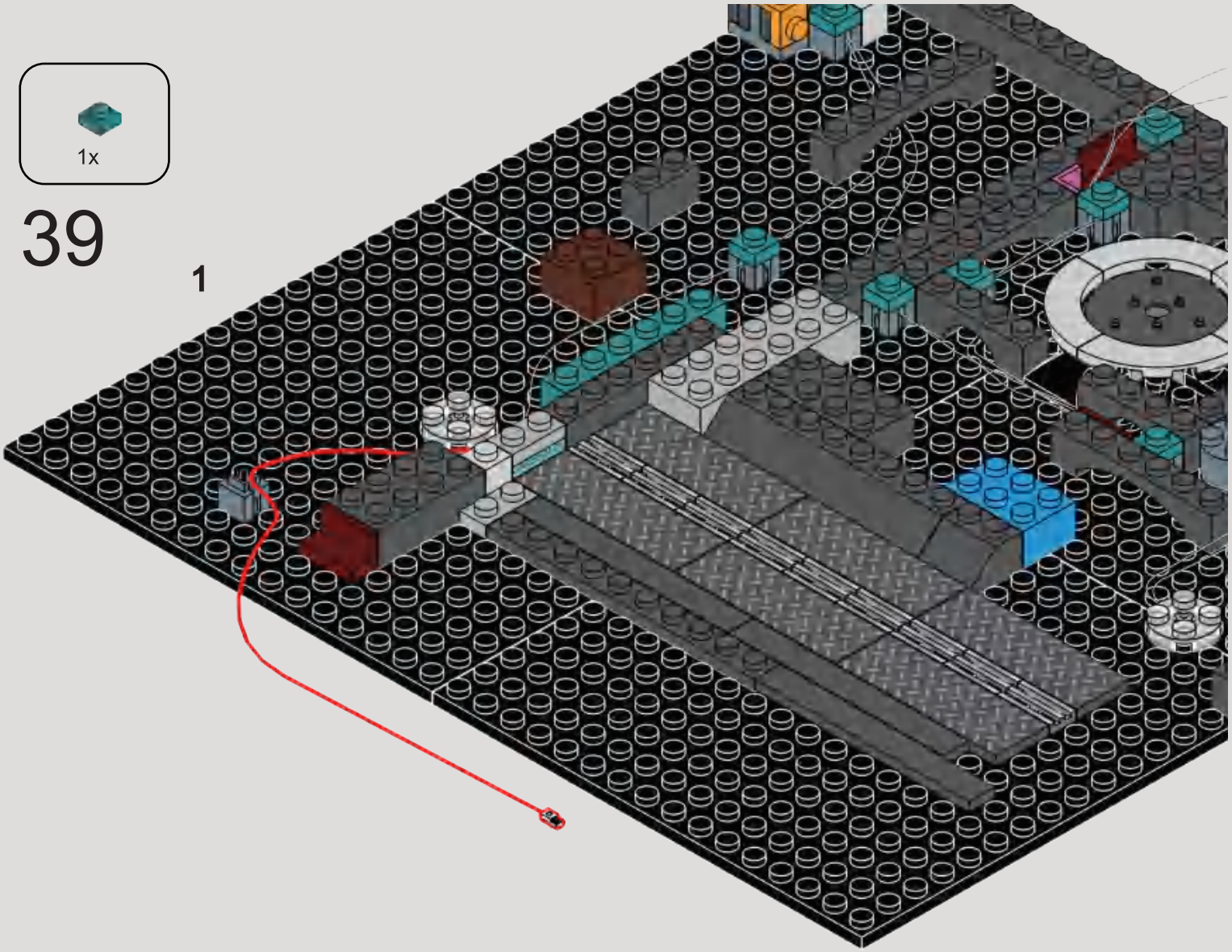

2

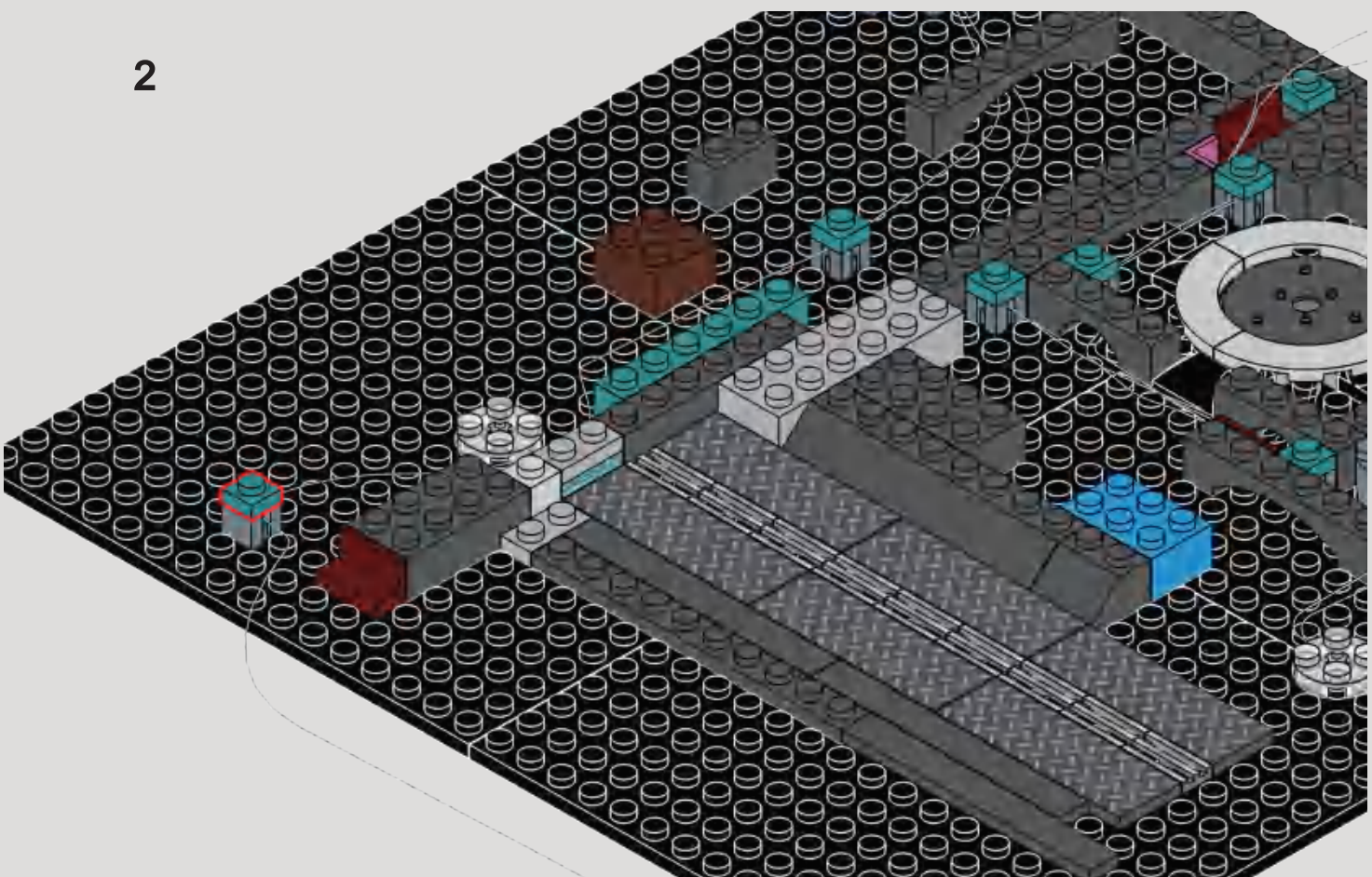

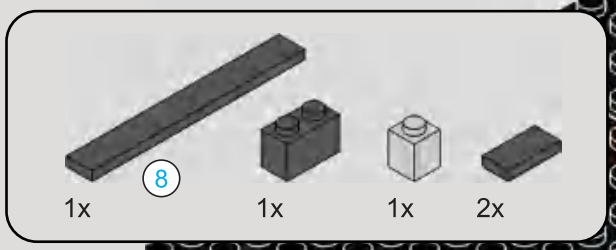

8 1:1

40

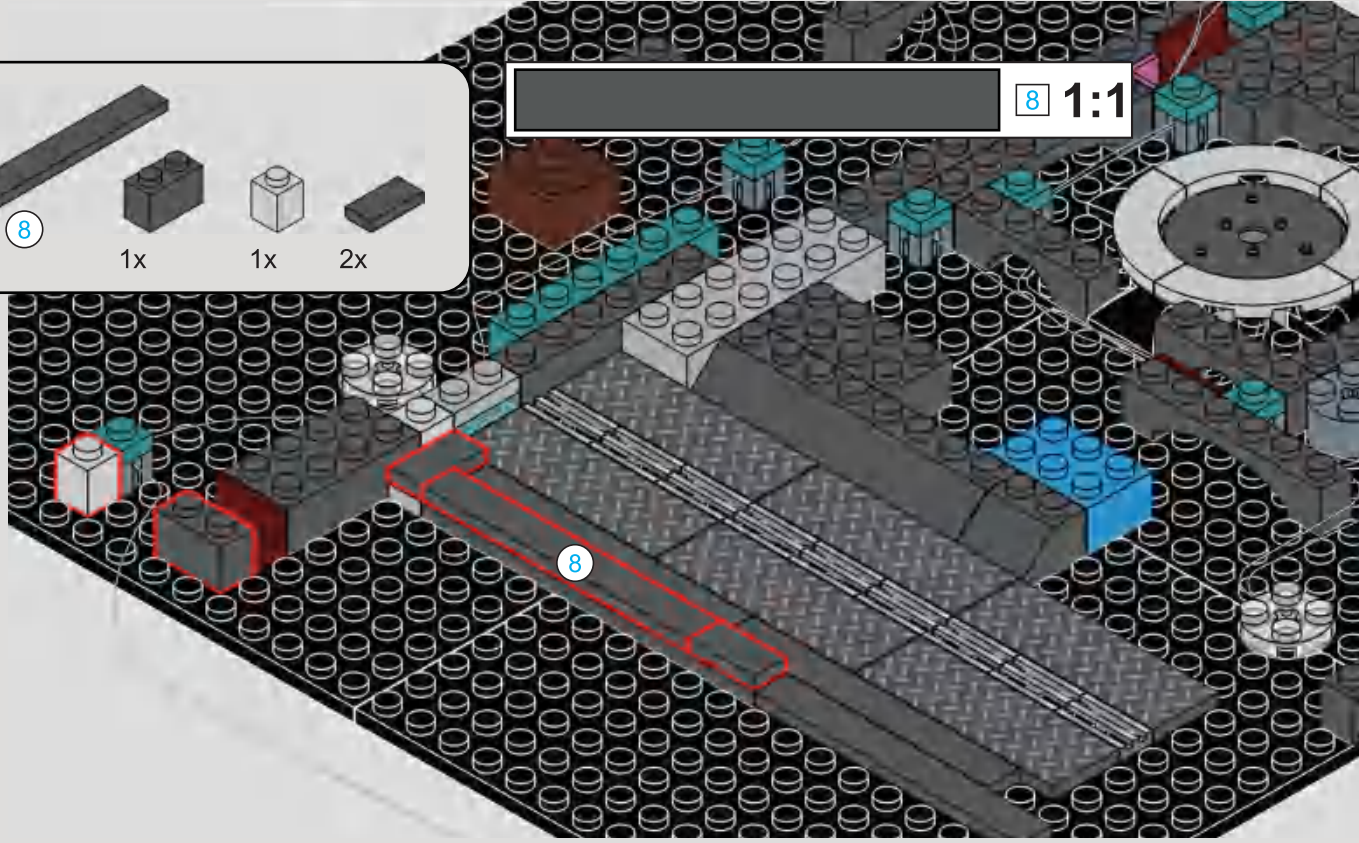

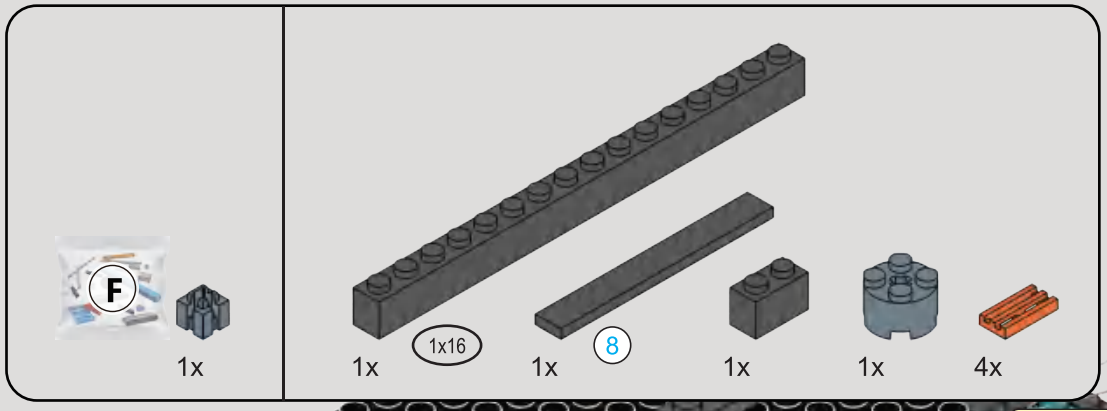

41

8 1:1

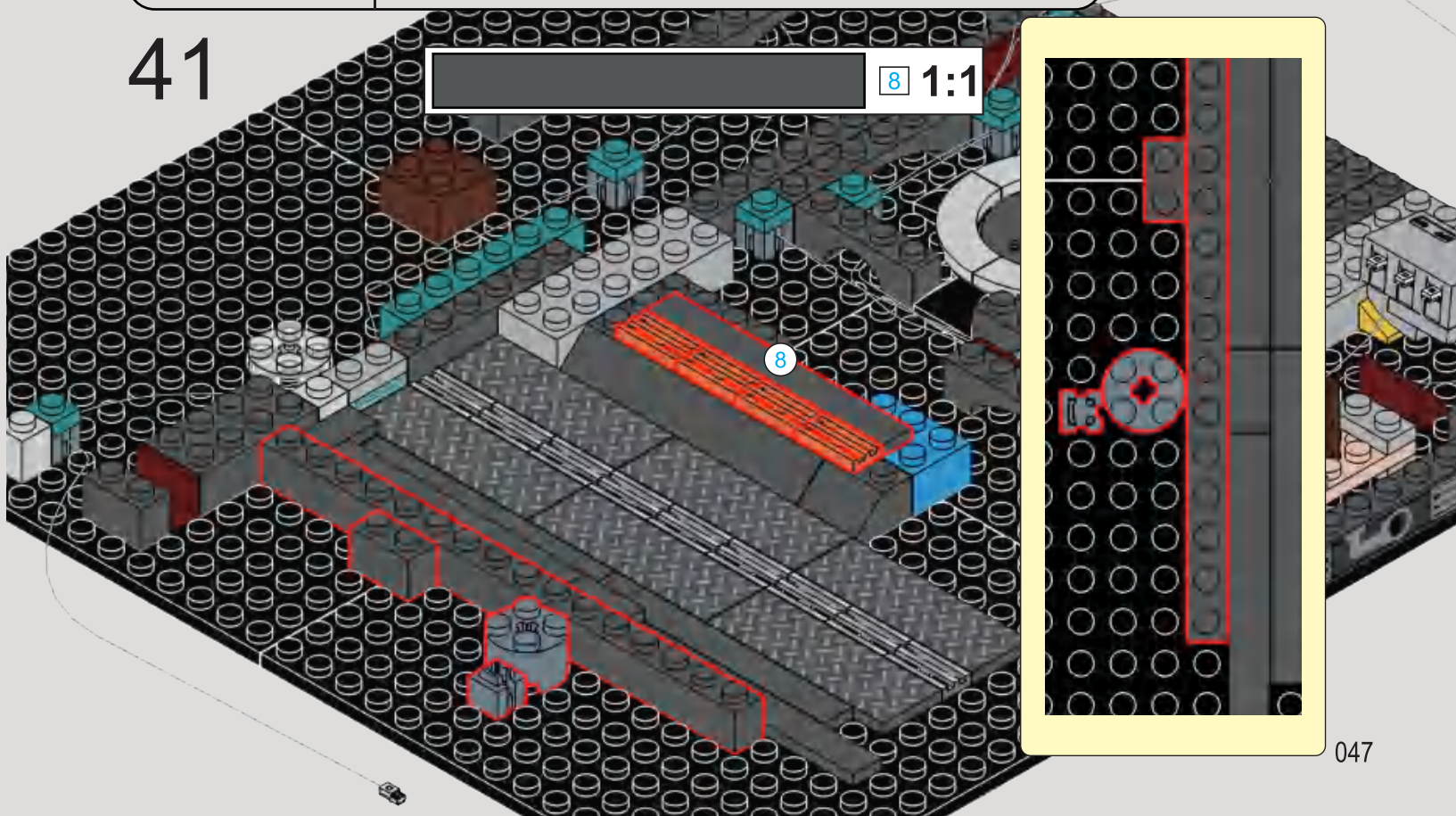

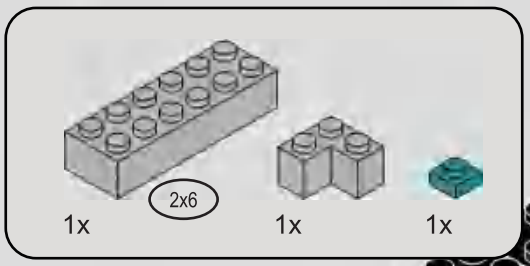

42

1

2

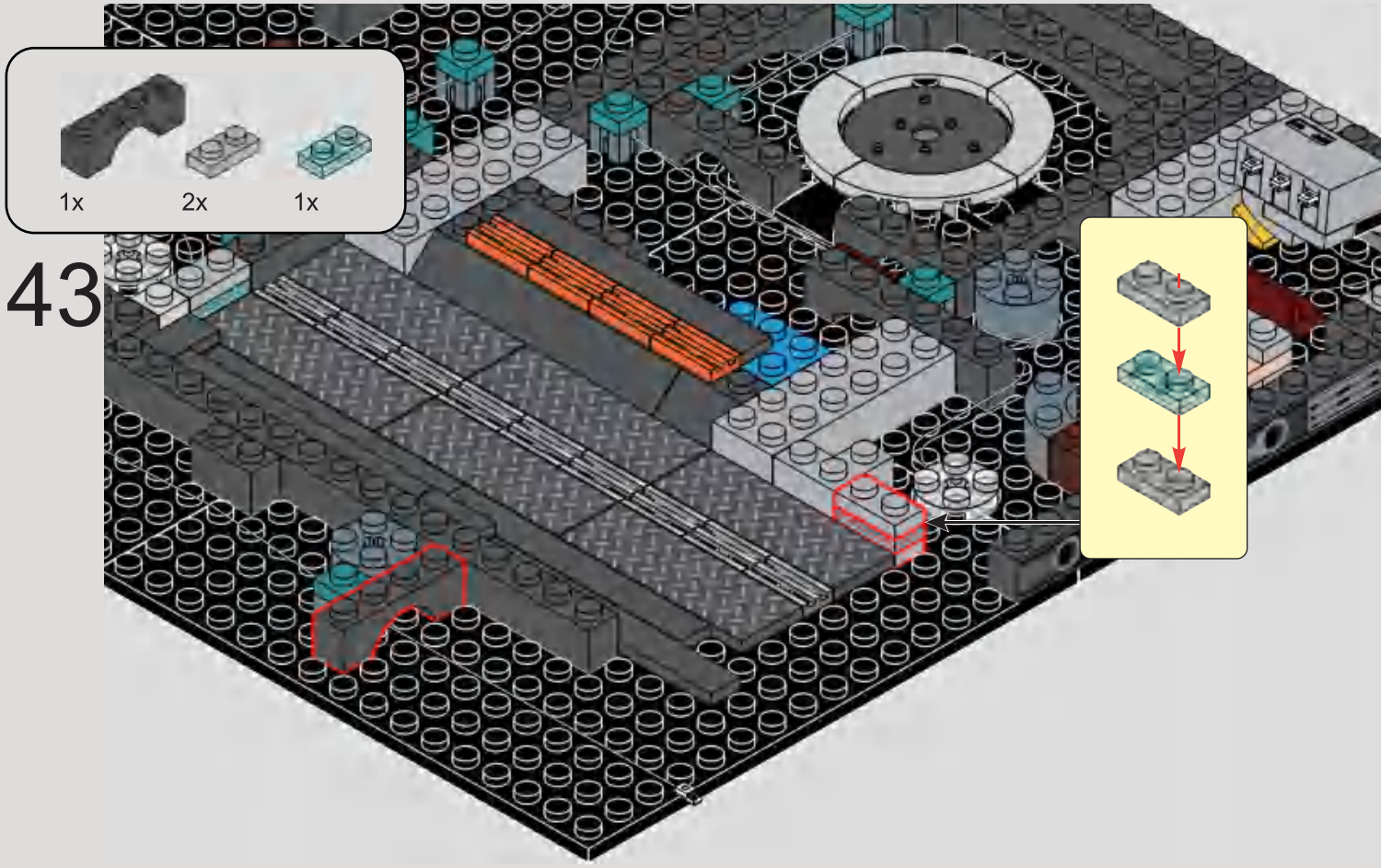

43

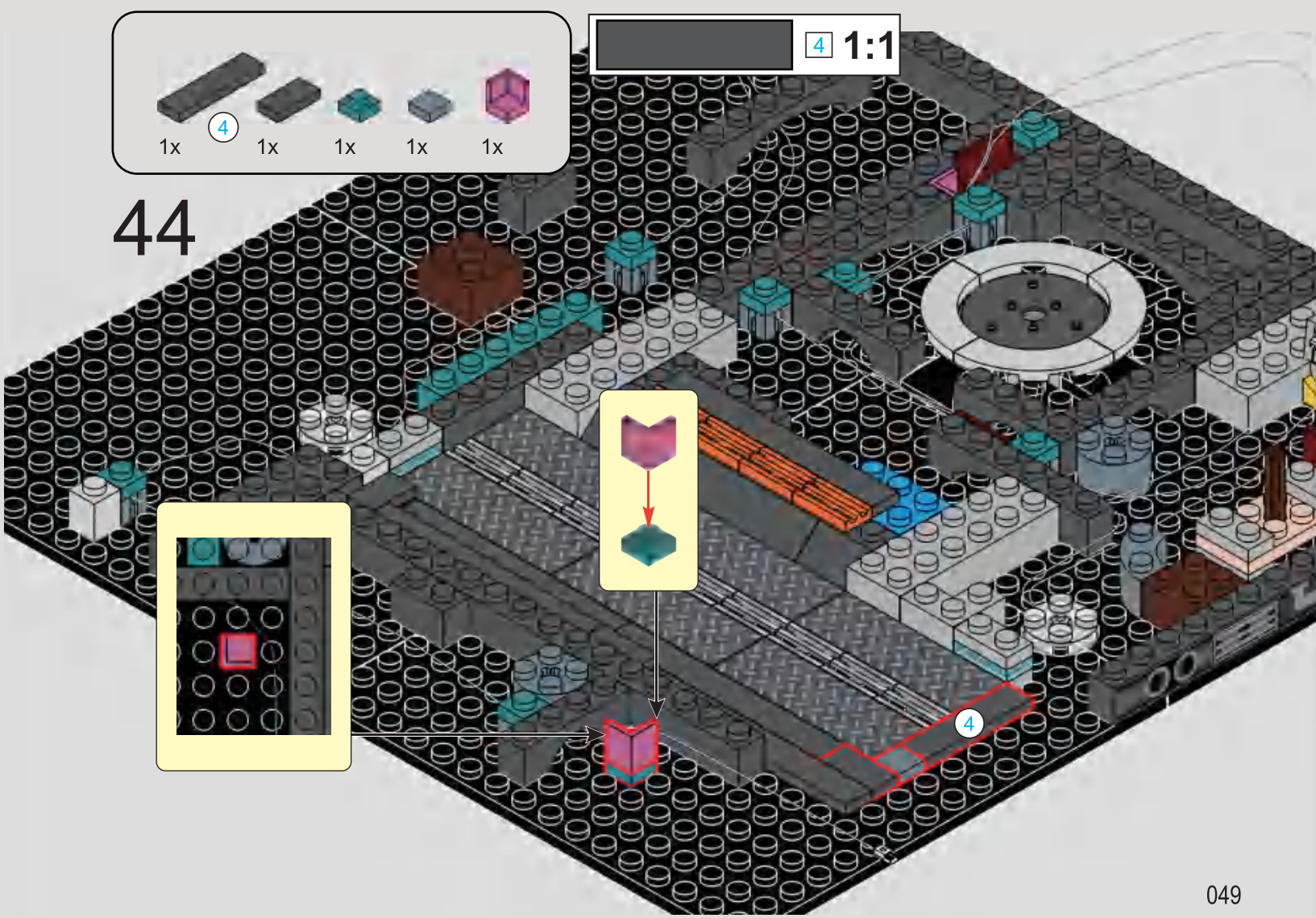

44

45

1

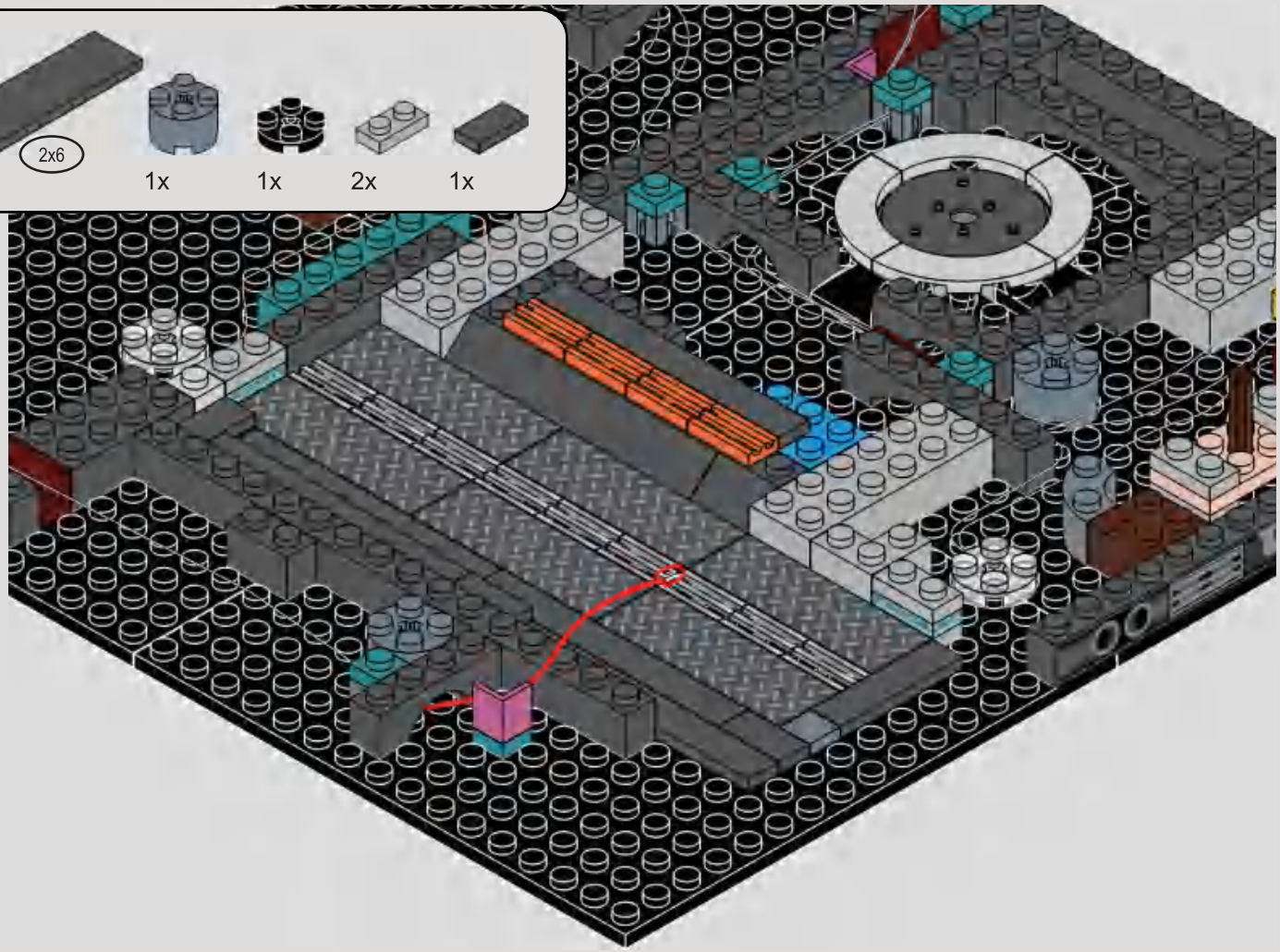

2

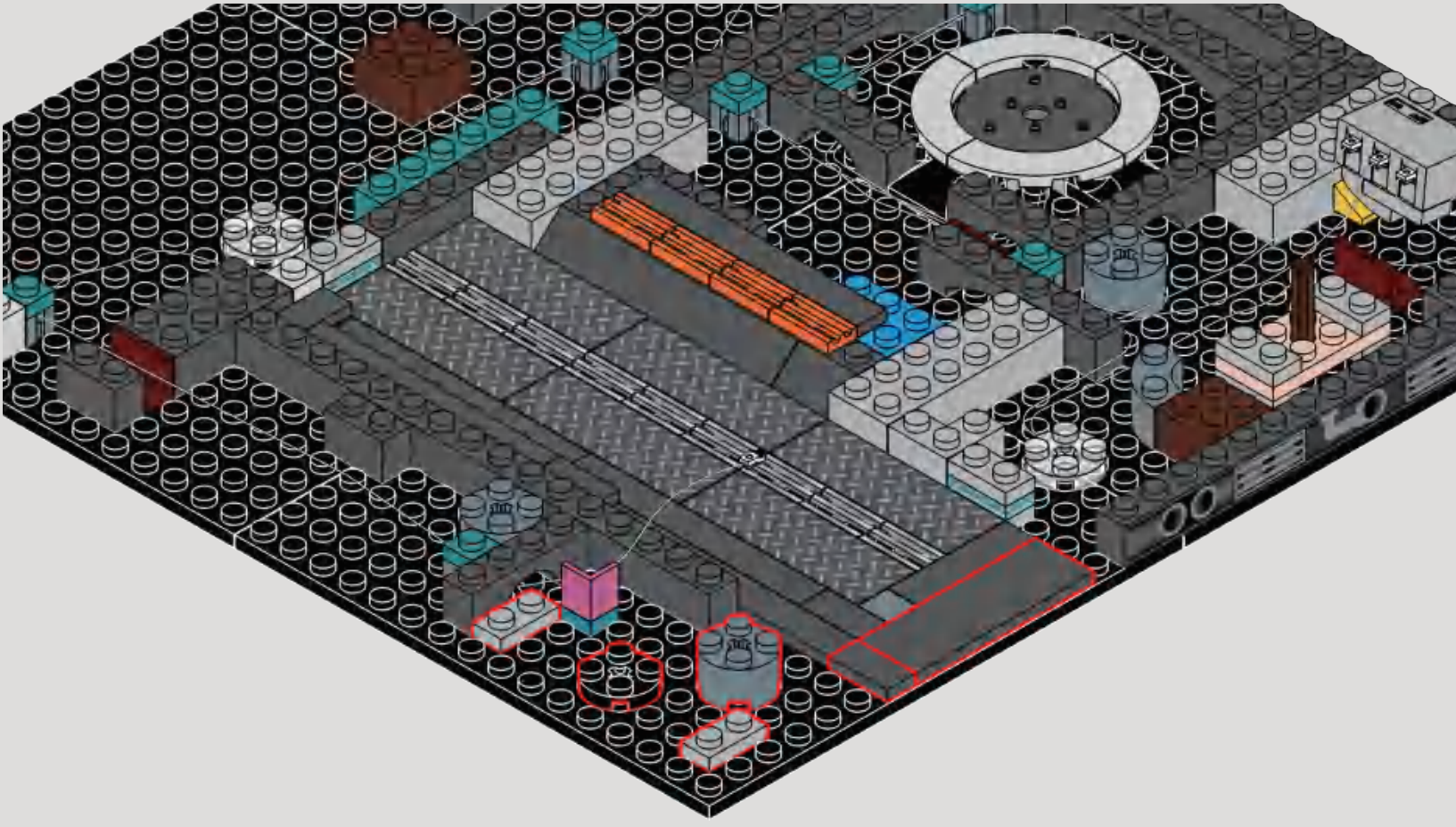

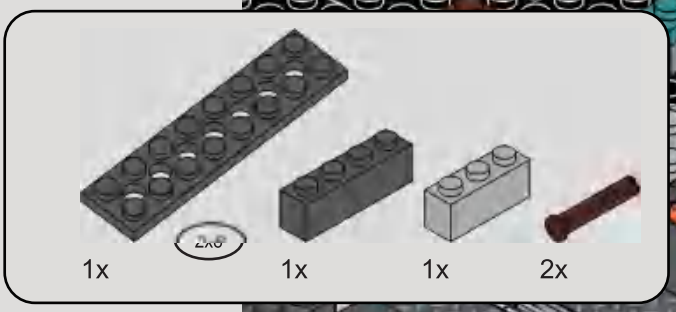

46

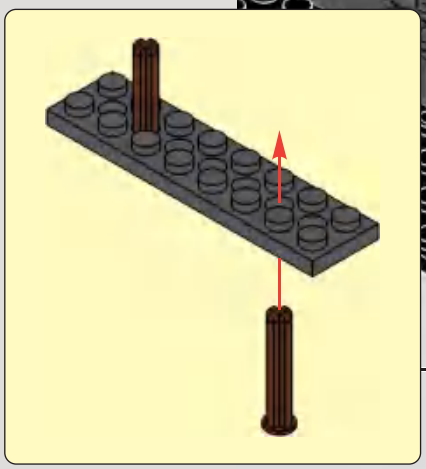

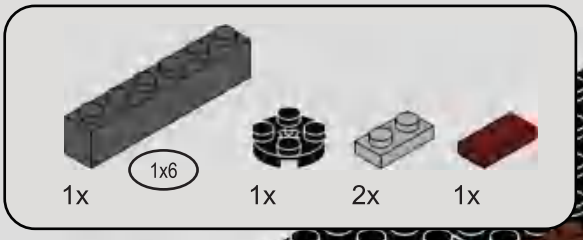

47

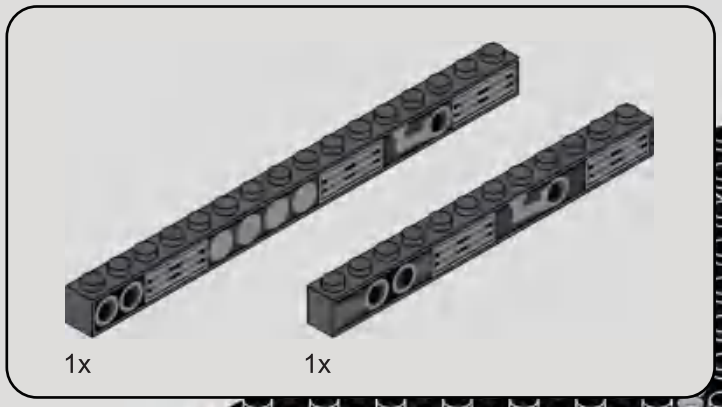

48

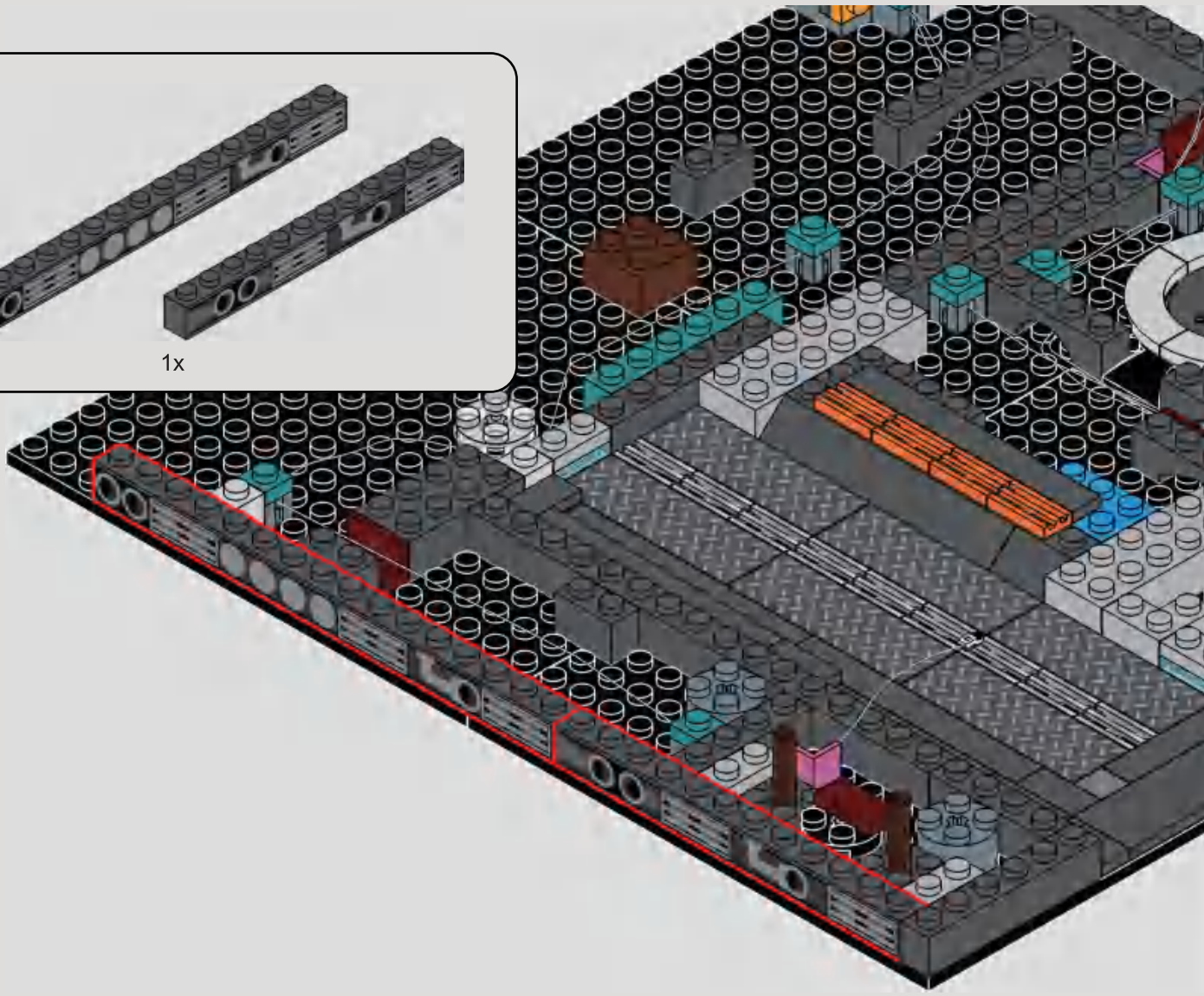

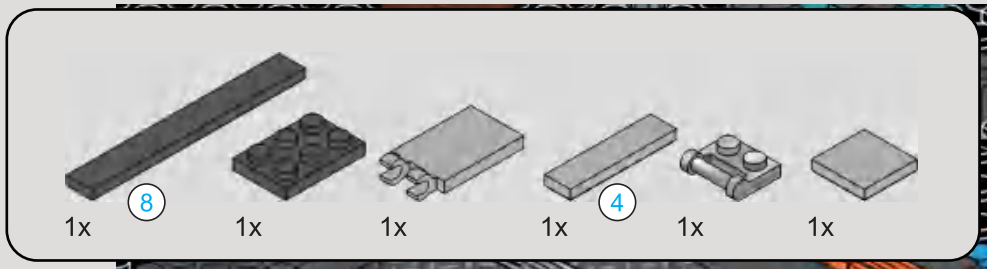

49

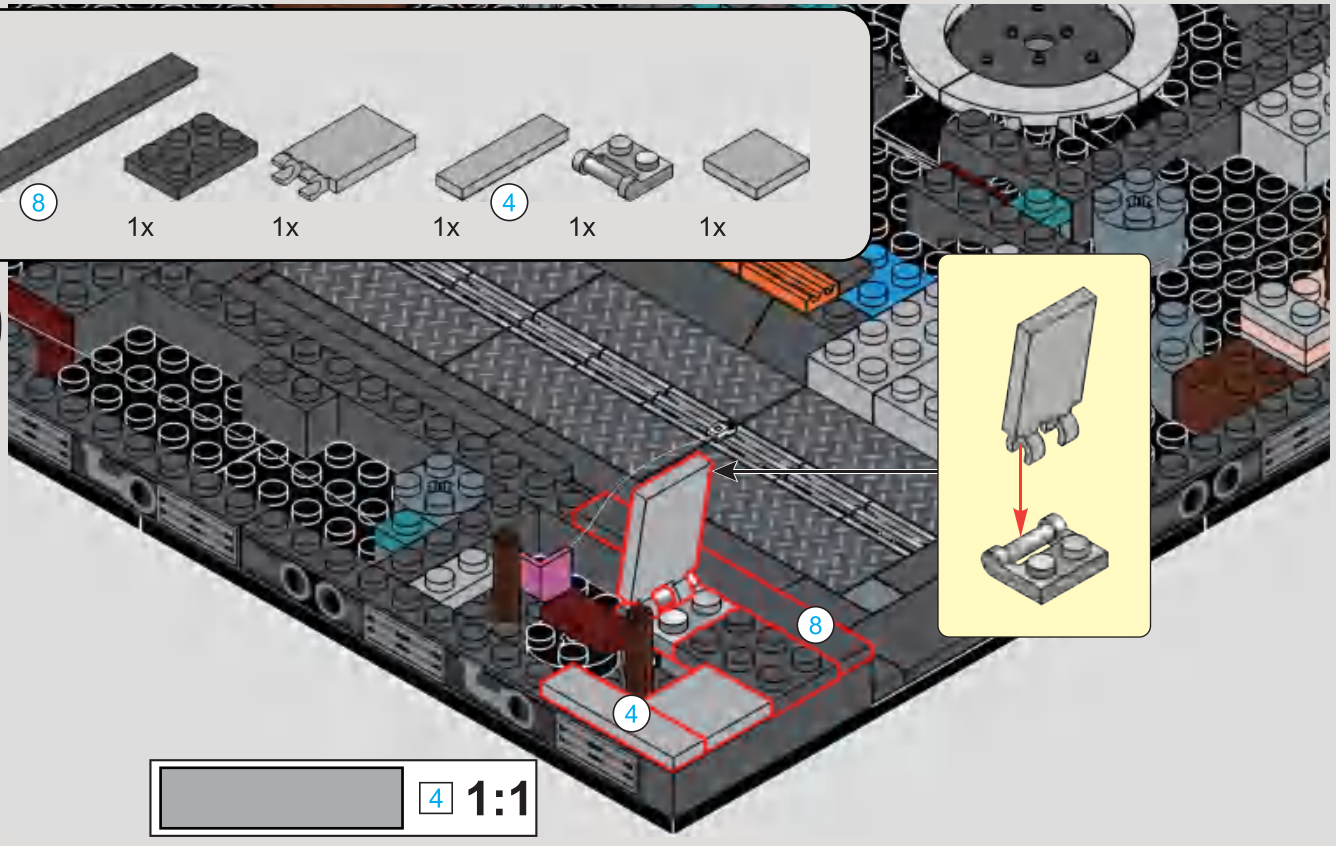

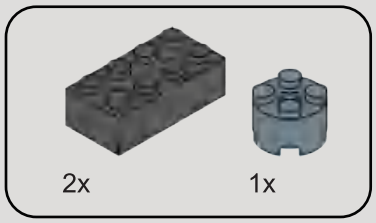

50

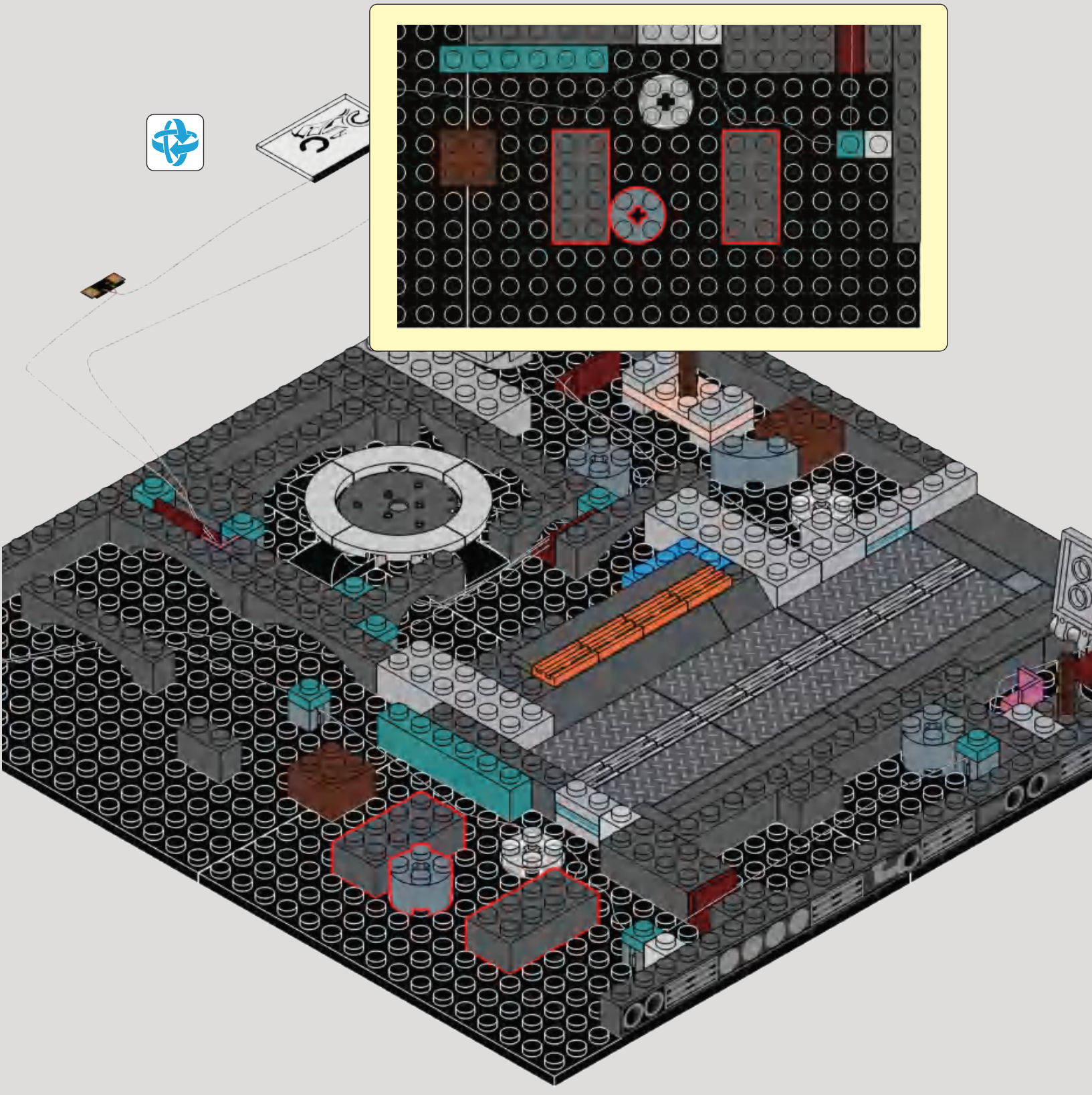

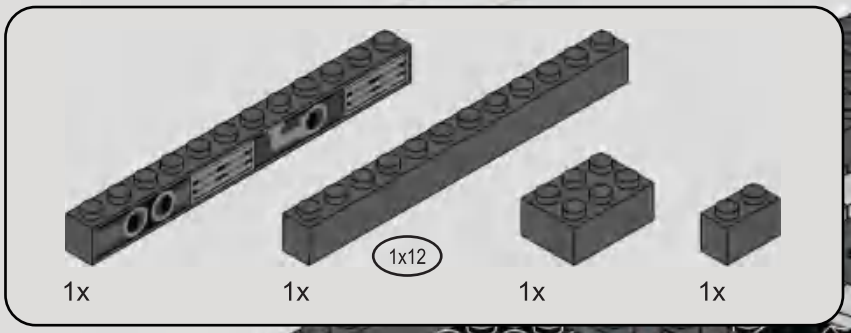

51

1

2

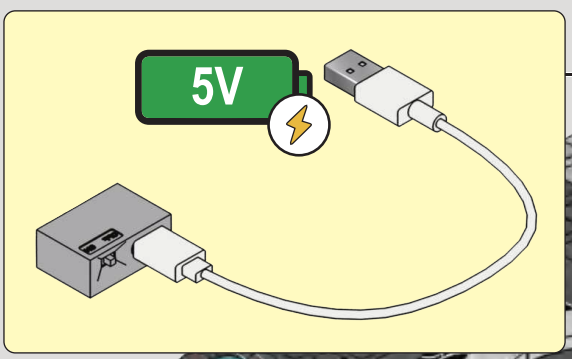

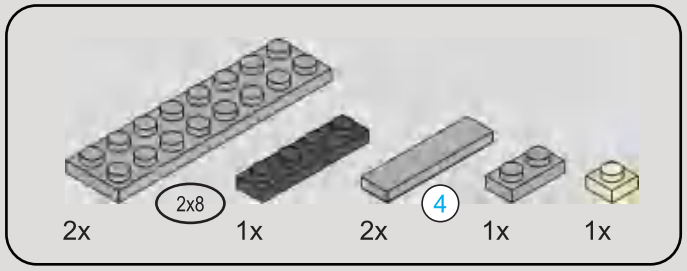

52

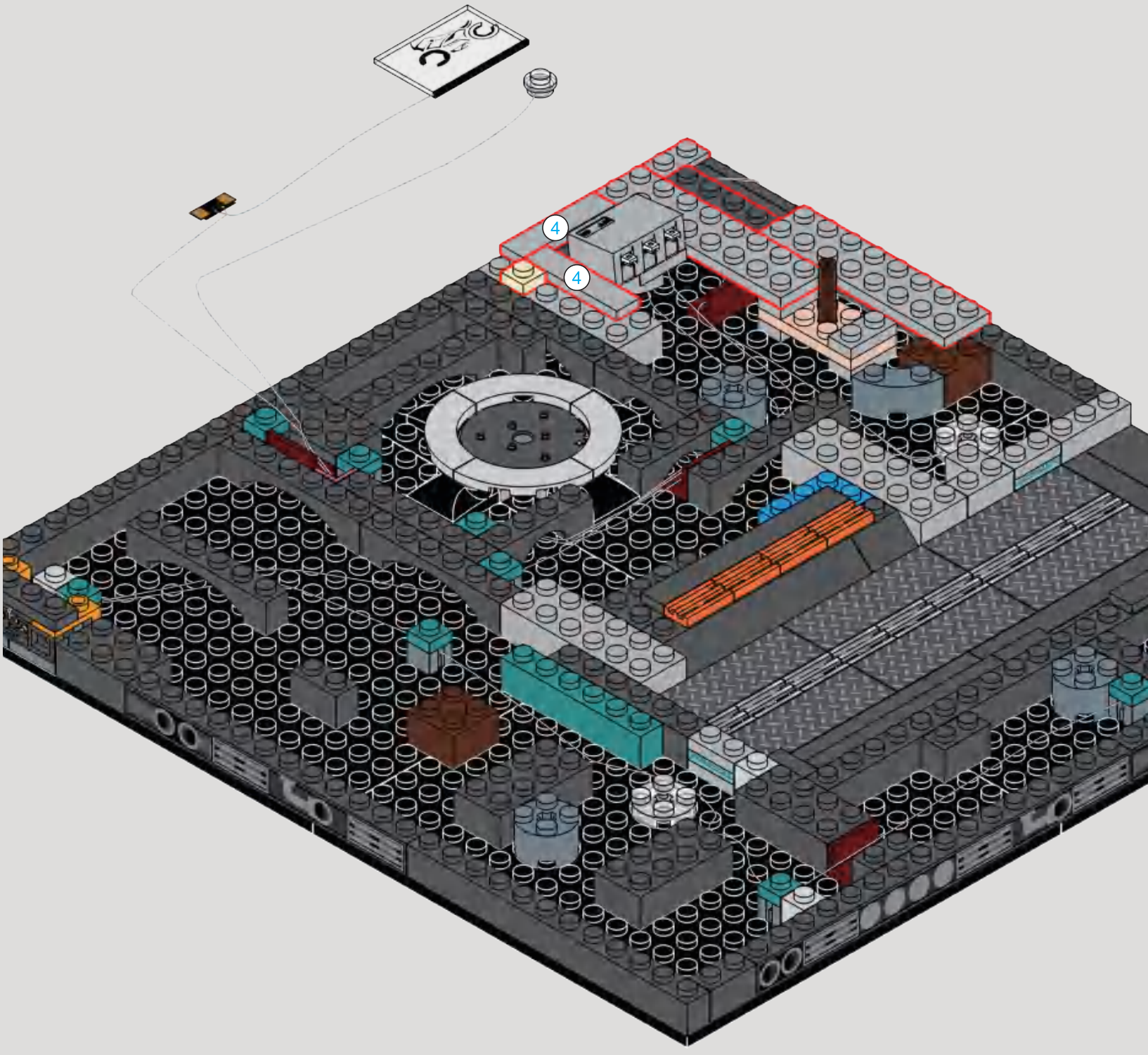

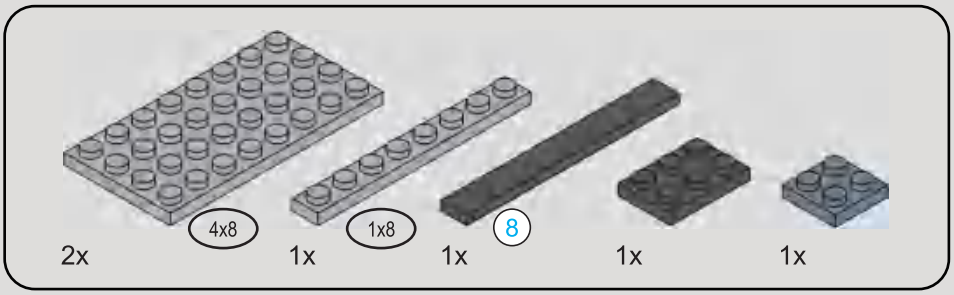

53

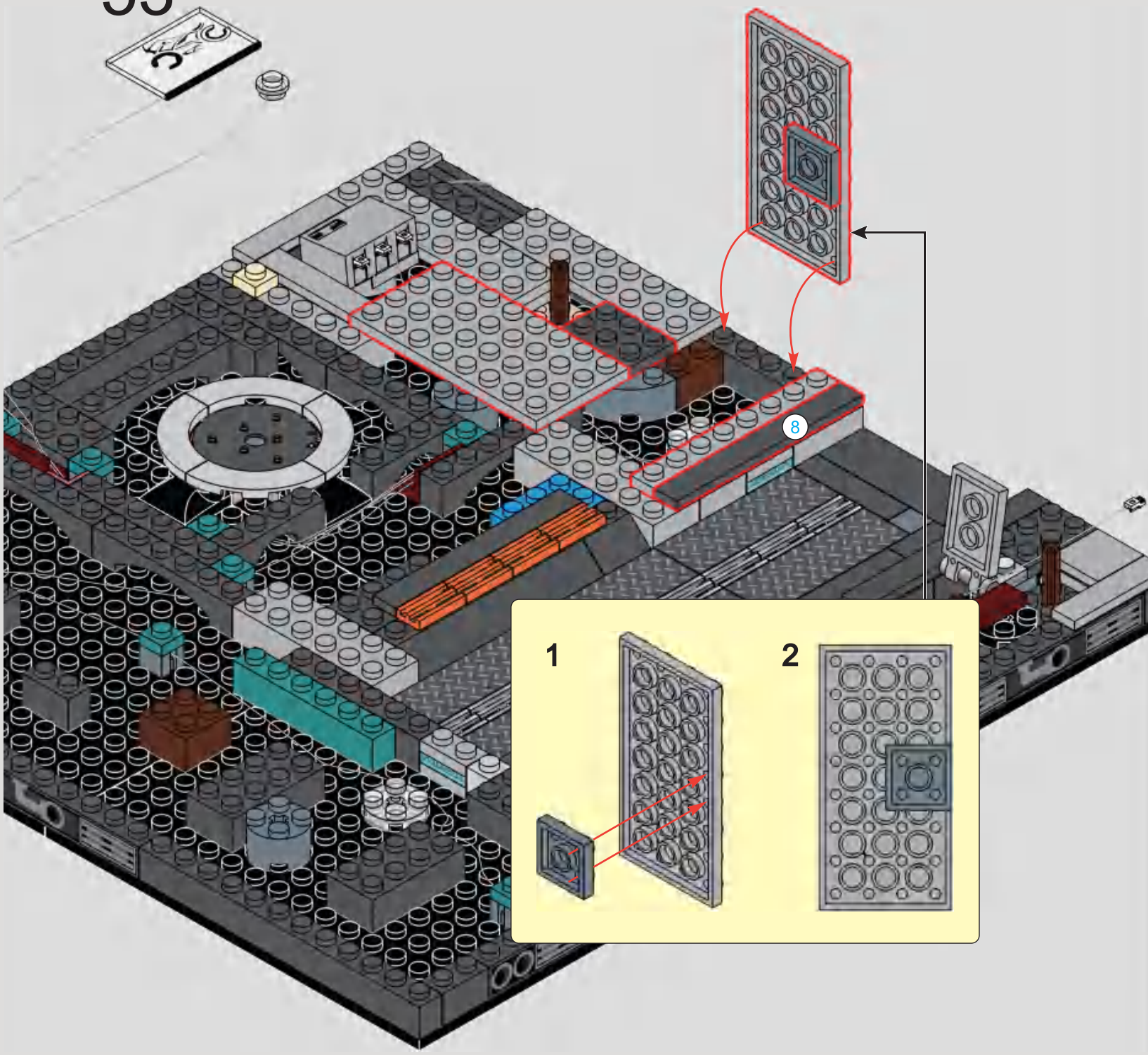

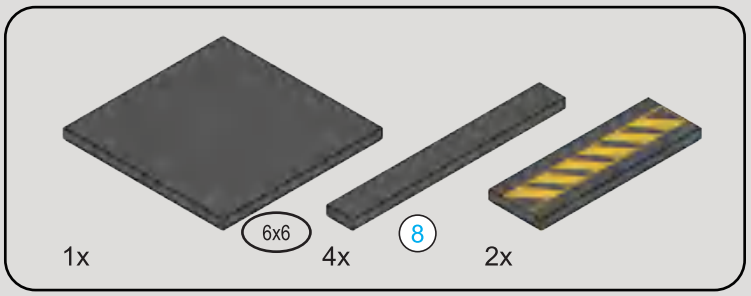

54

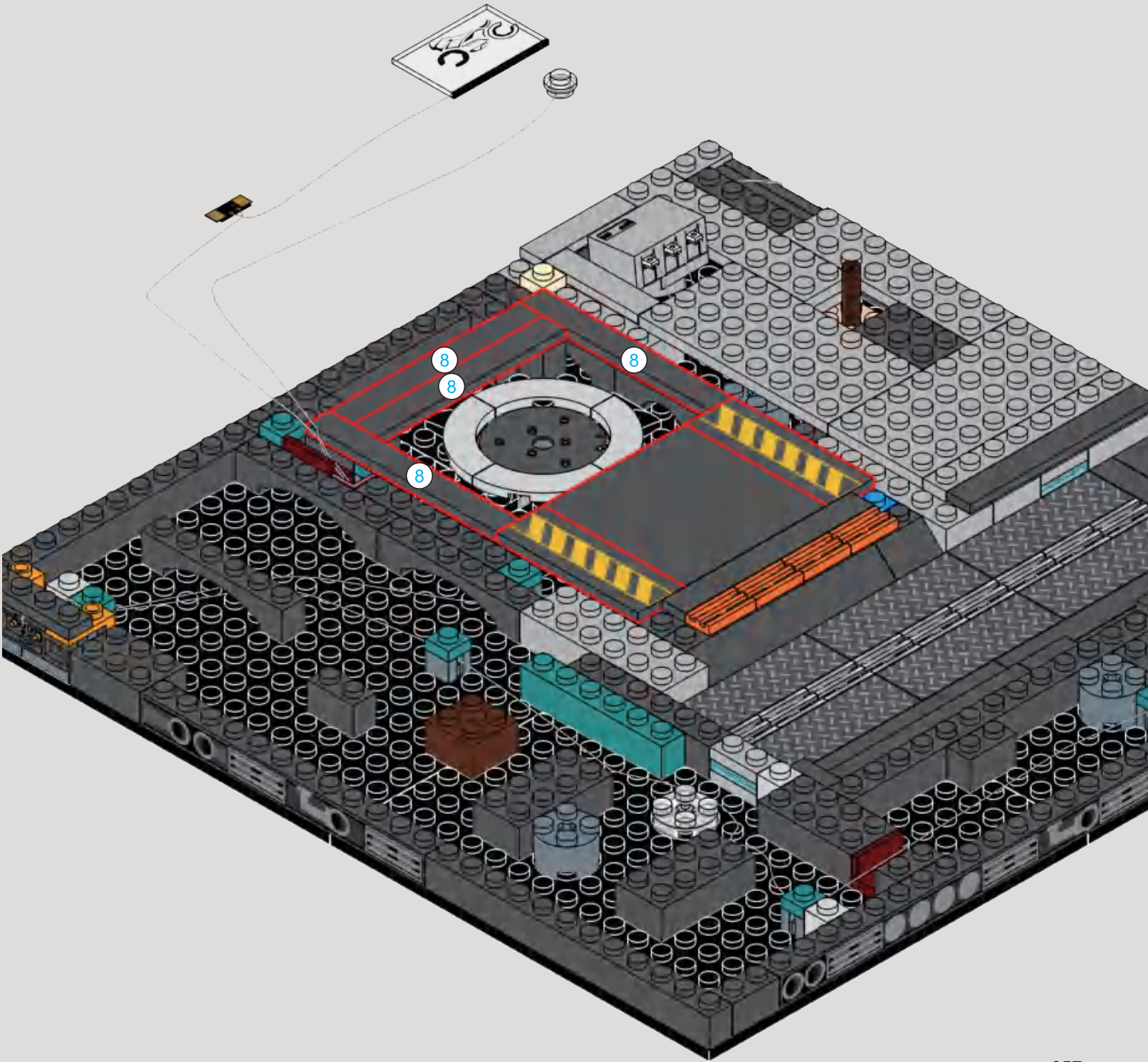

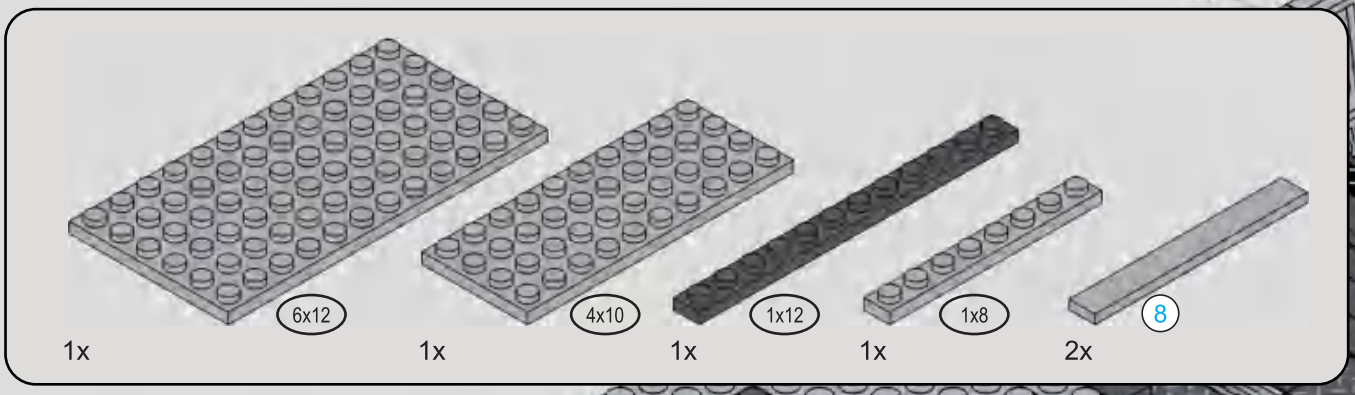

55

1

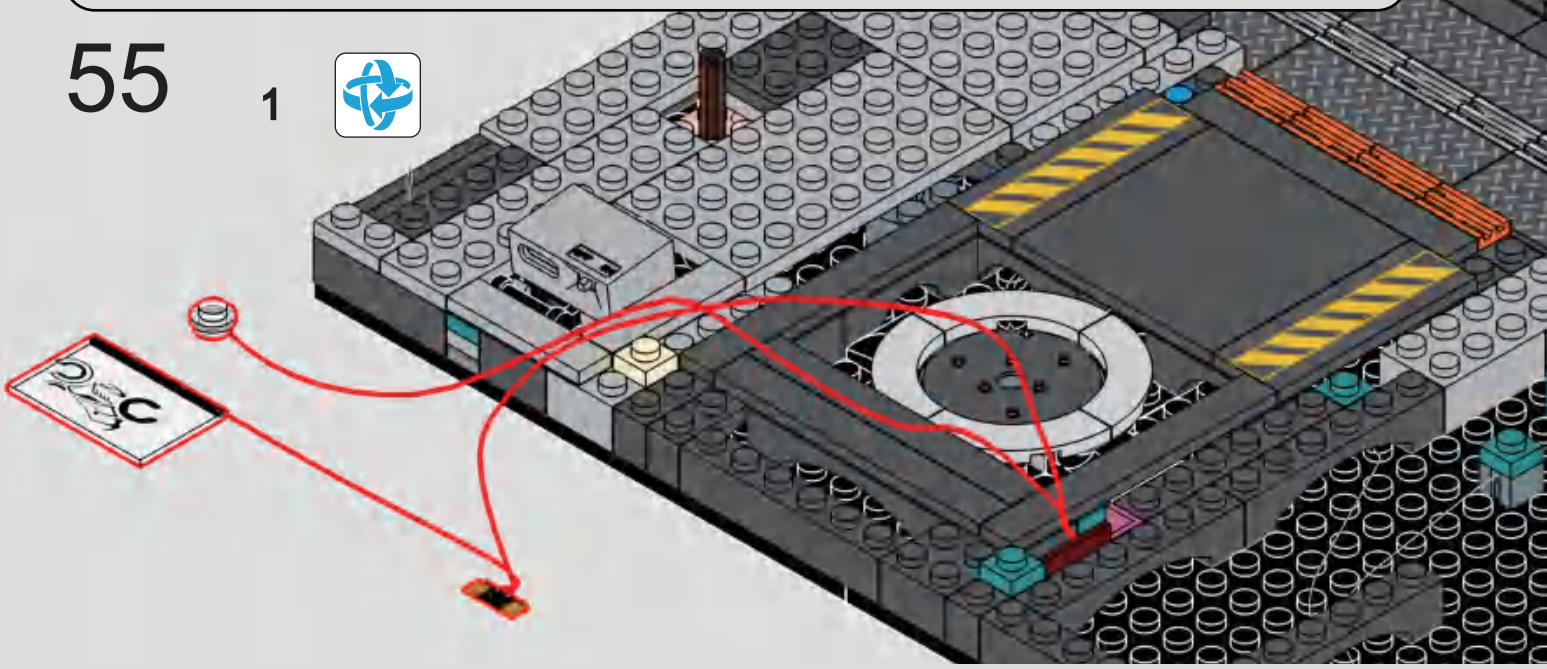

2

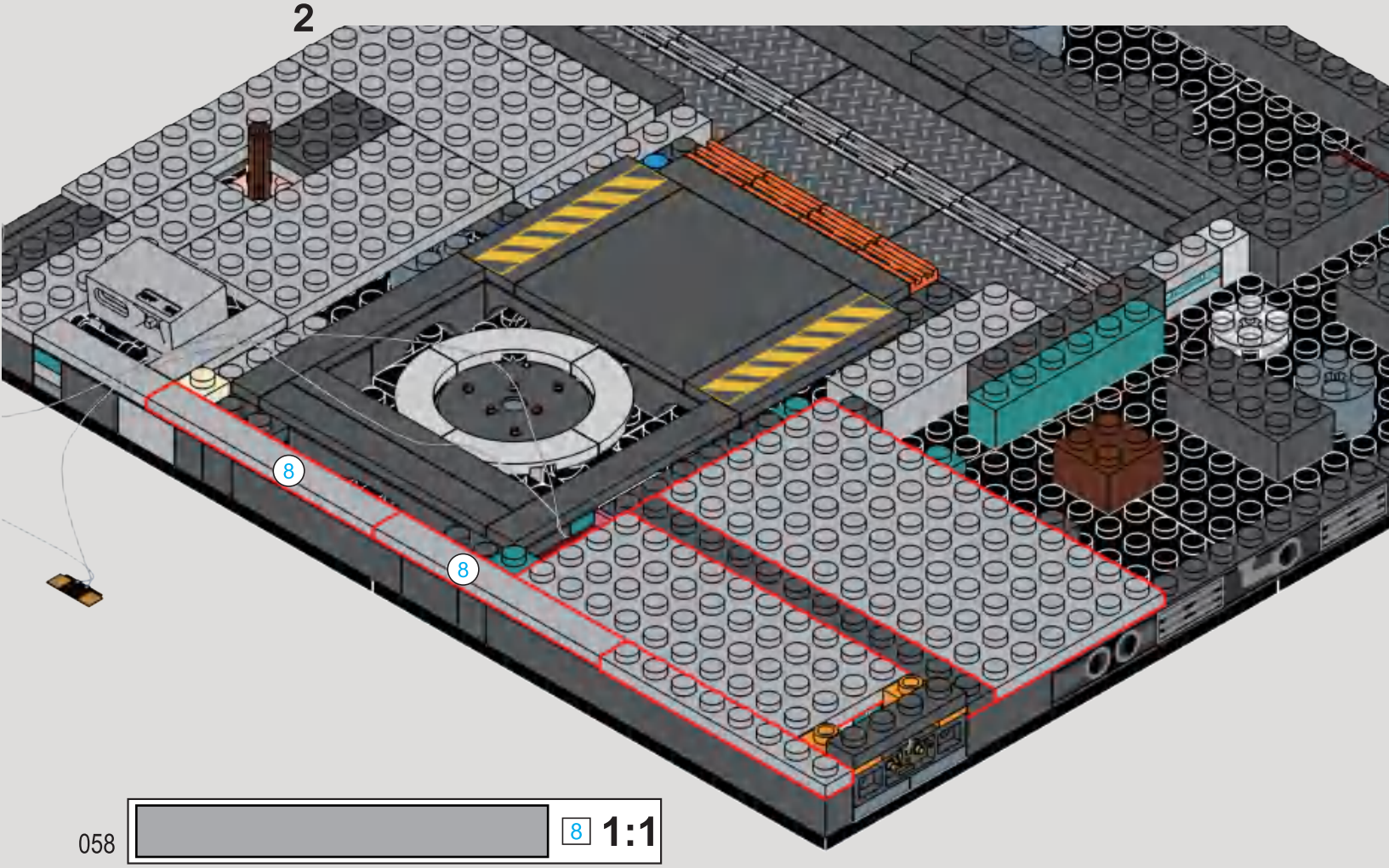

8 1:1

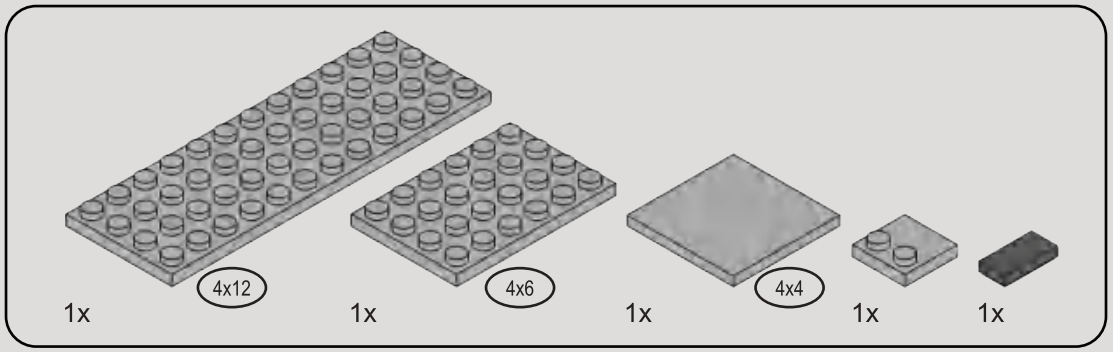

56

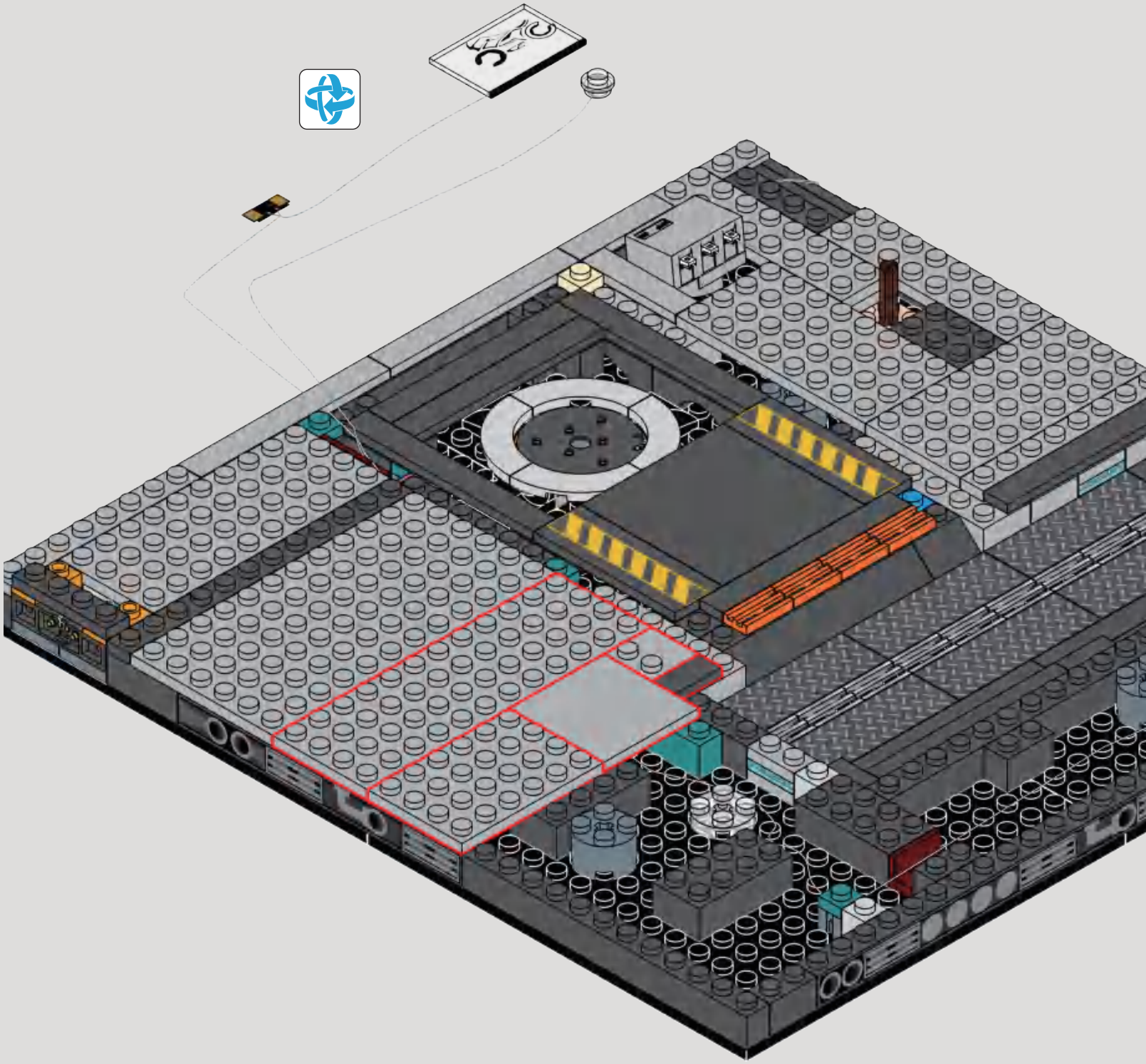

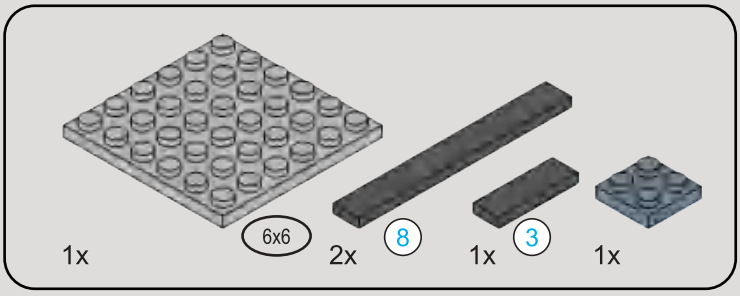

8 1:1

57

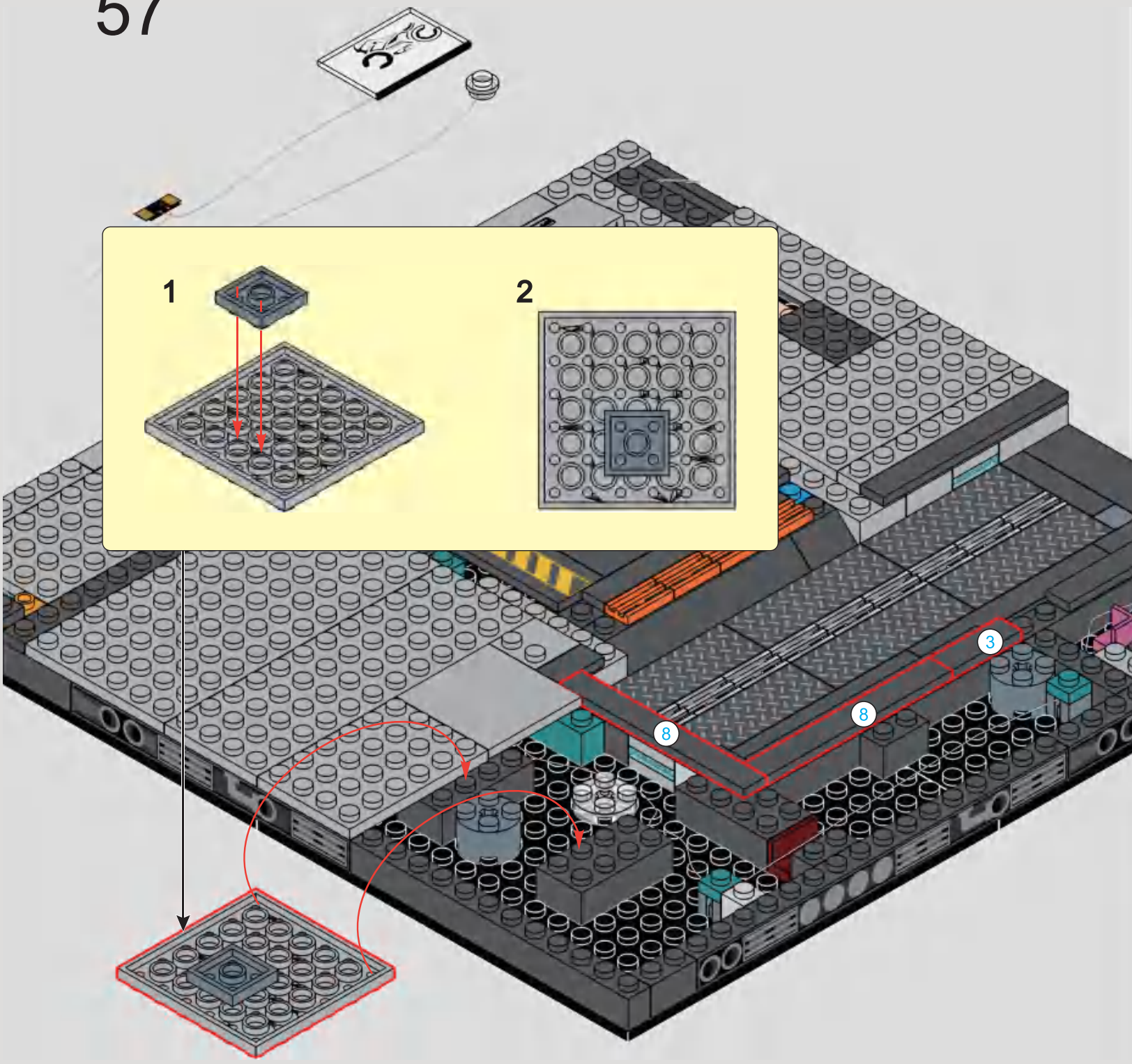

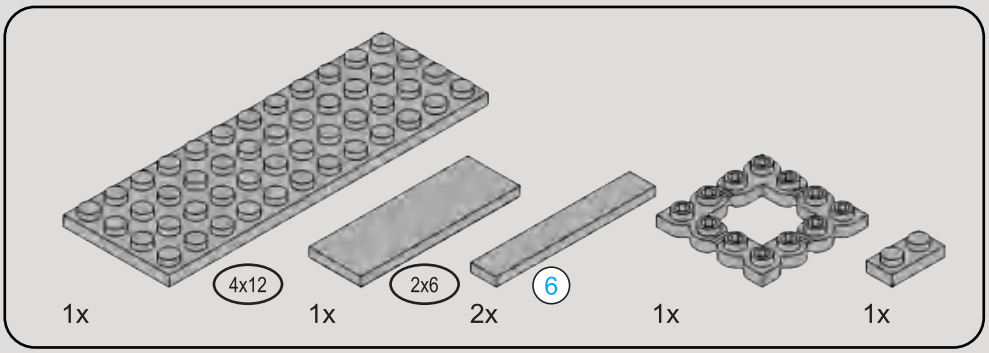

58

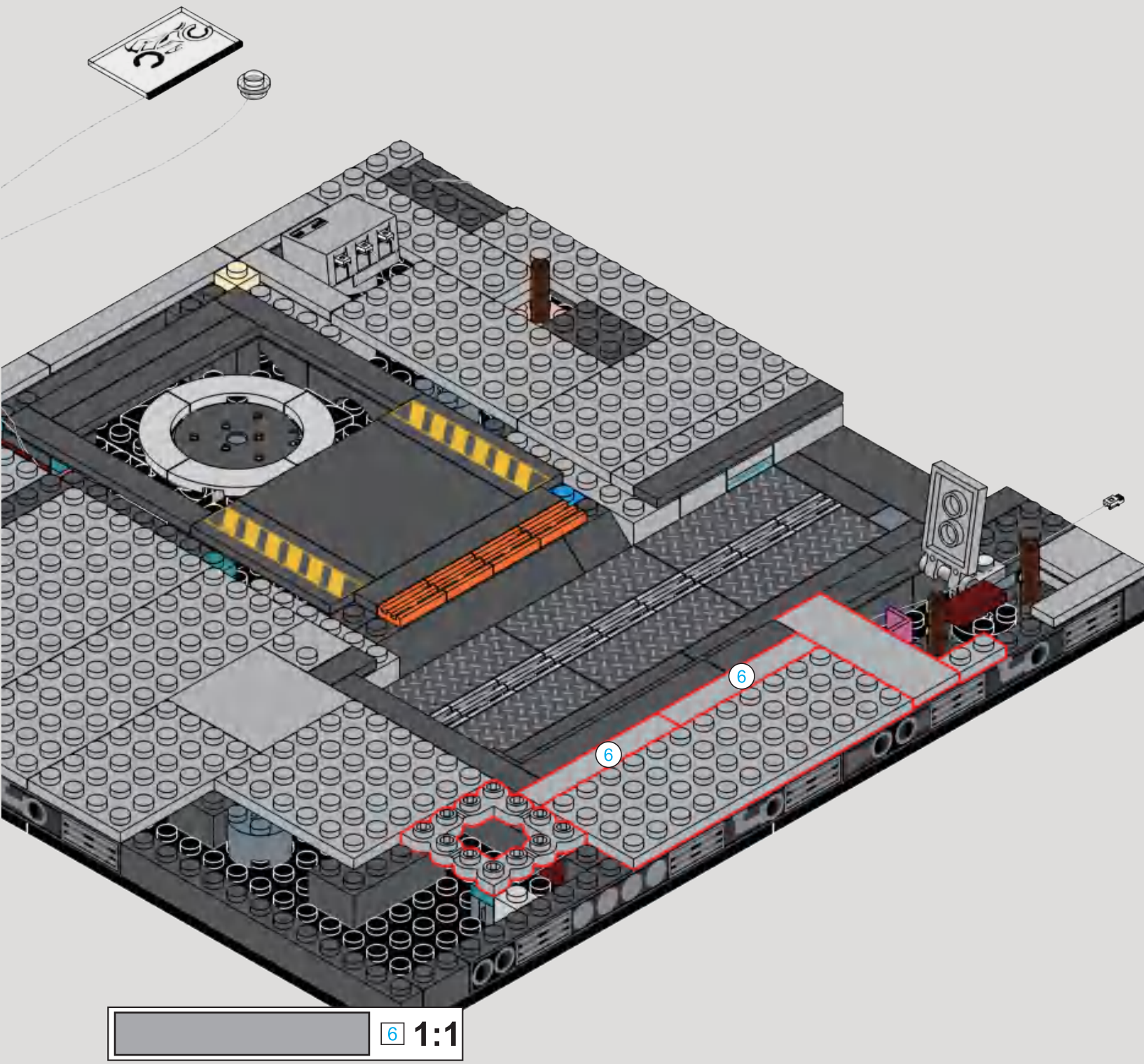

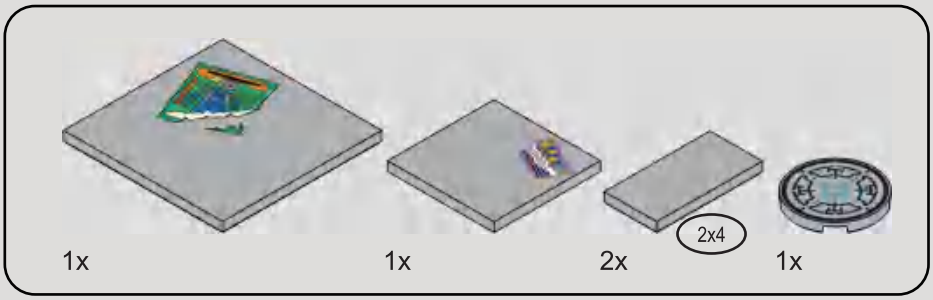

59

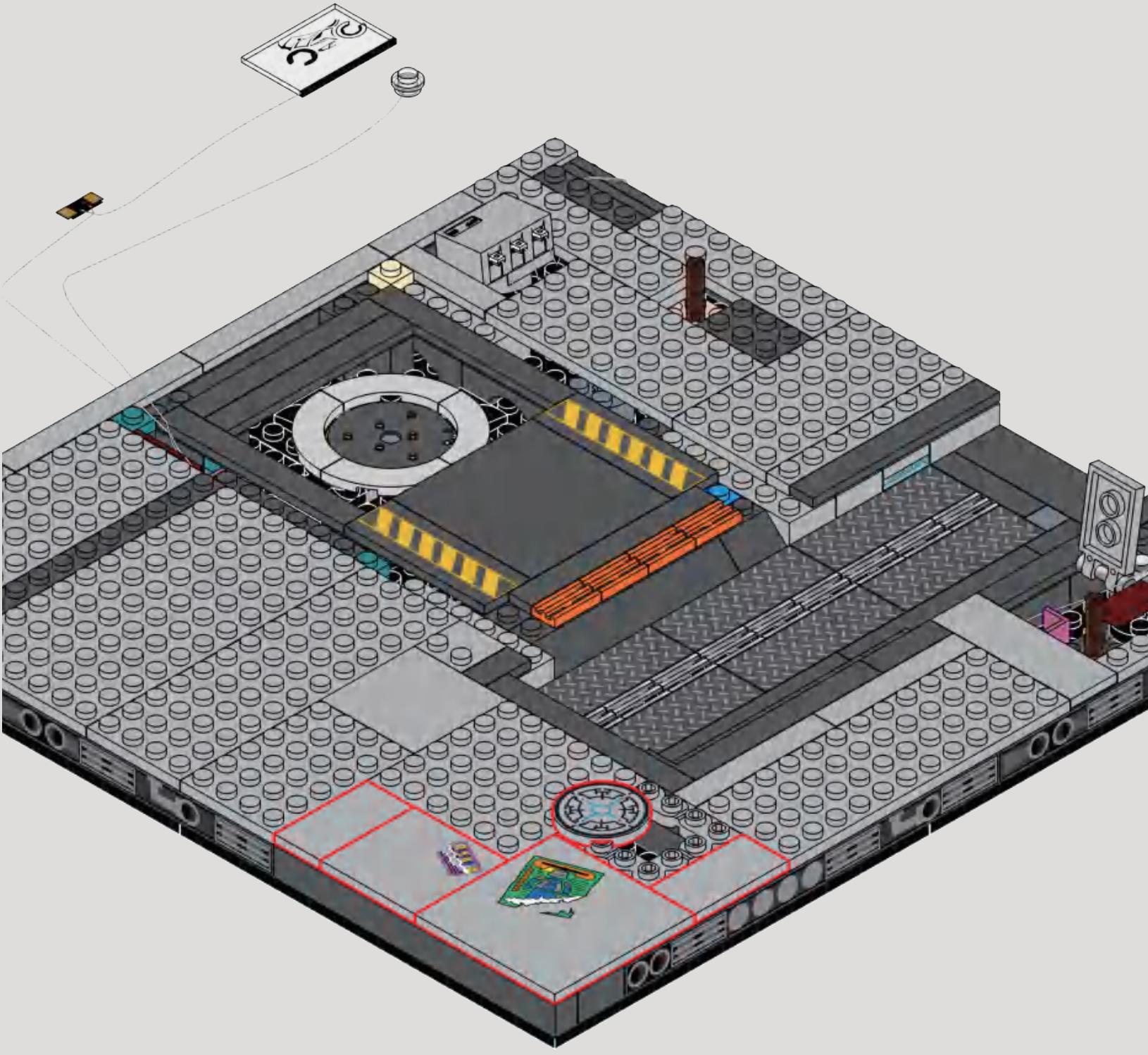

2
F
3

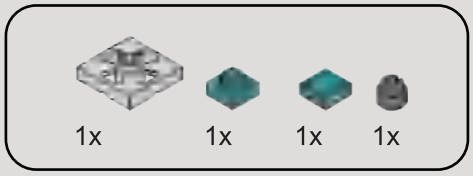

60

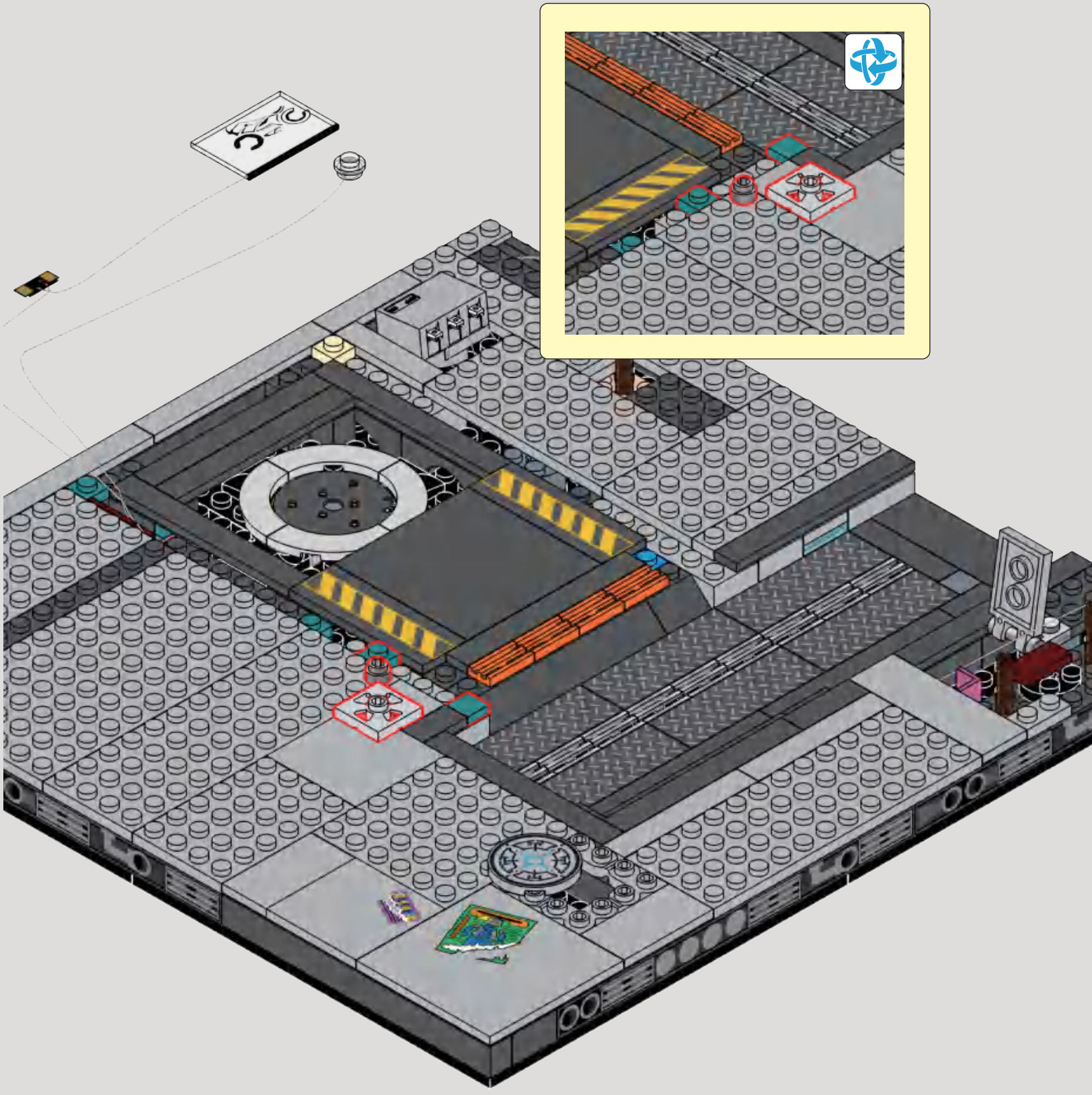

61

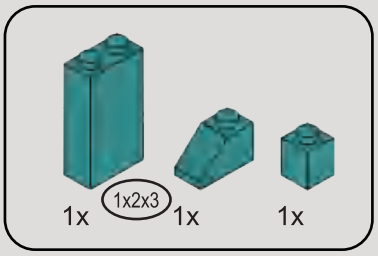

62

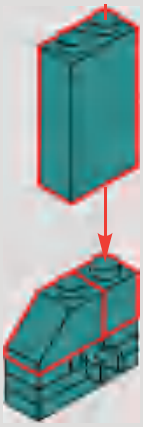

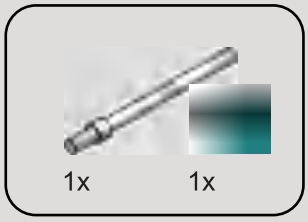

63

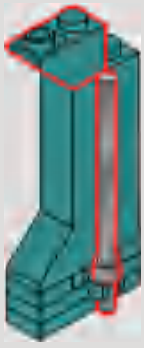

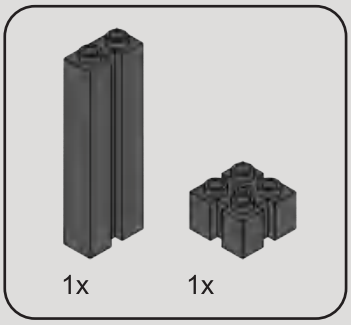

64

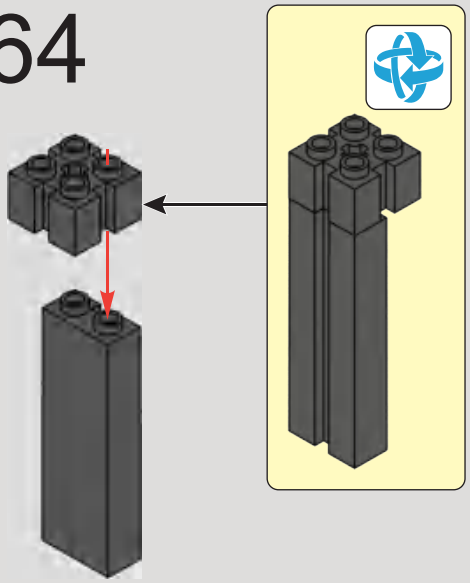

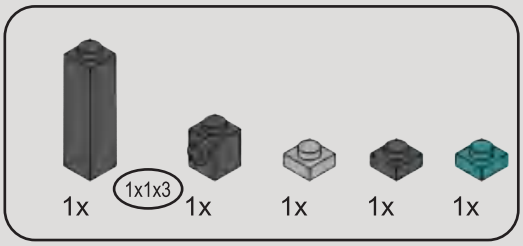

65

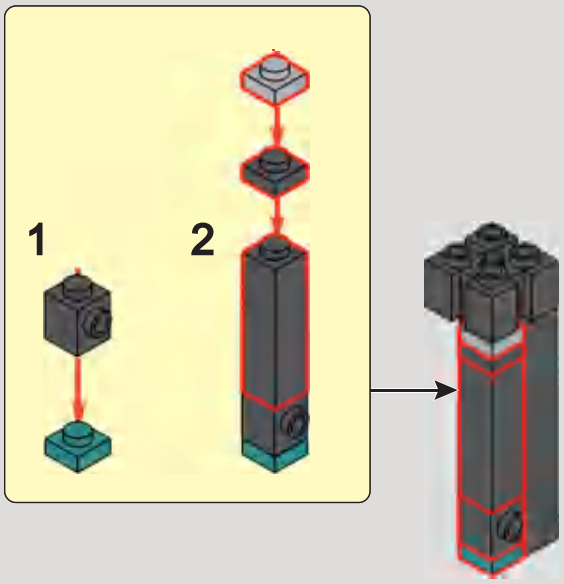

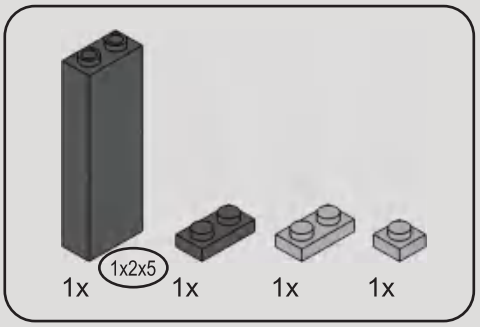

66

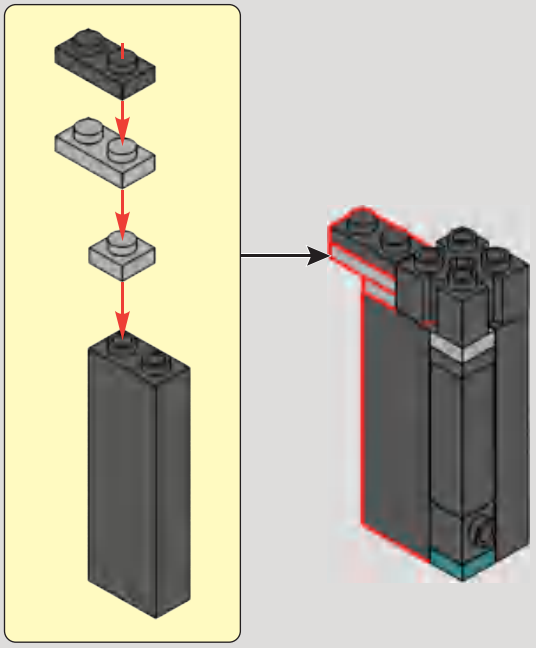

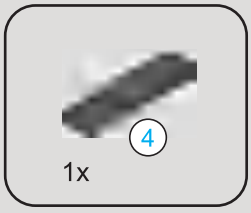

67

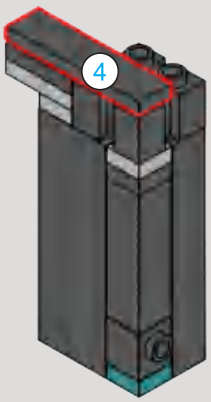

68

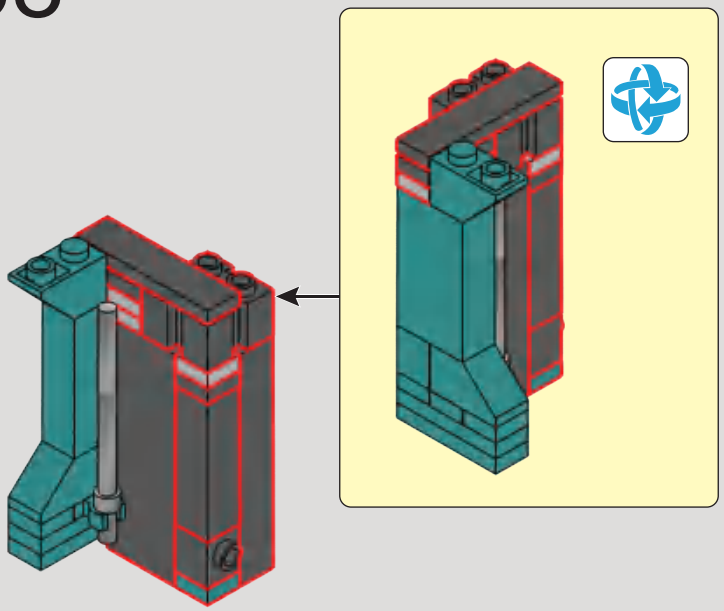

69

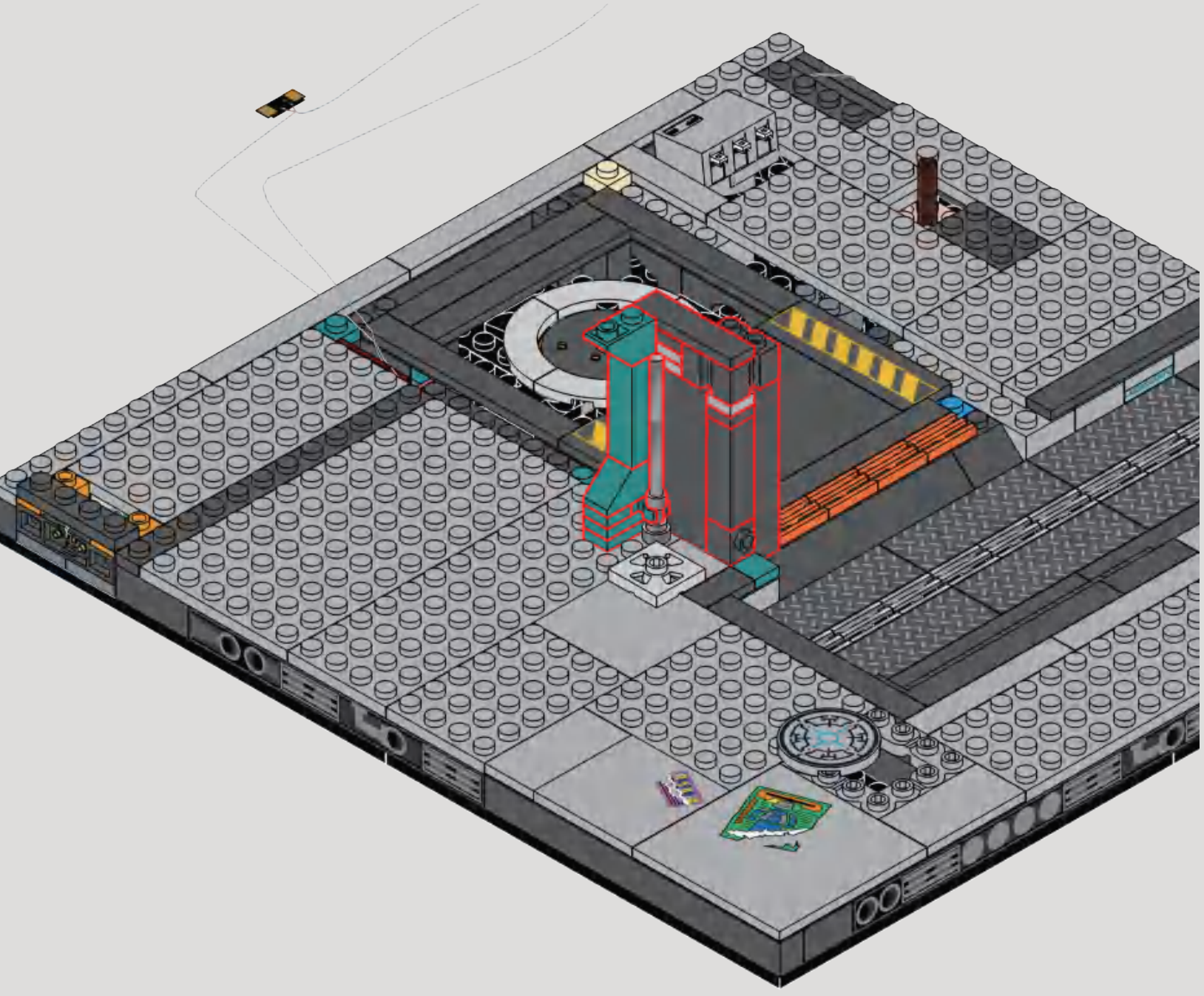

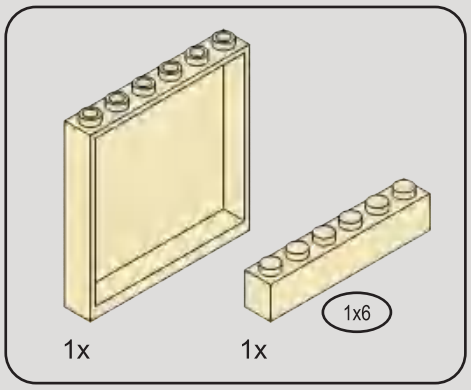

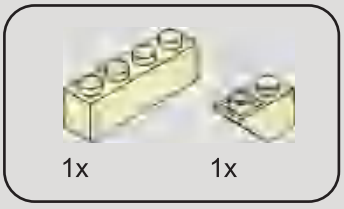

71

70

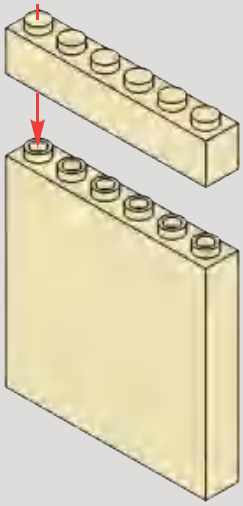

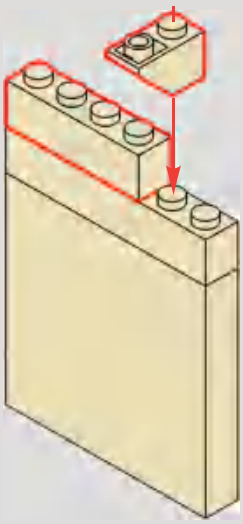

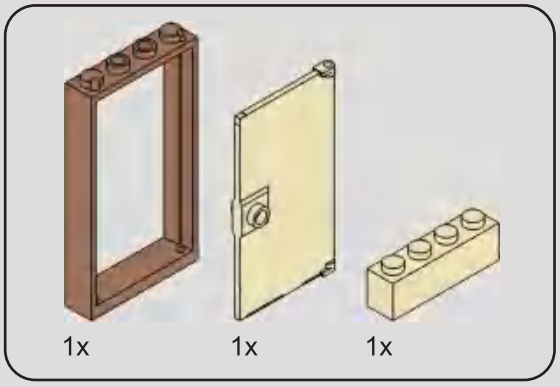

72

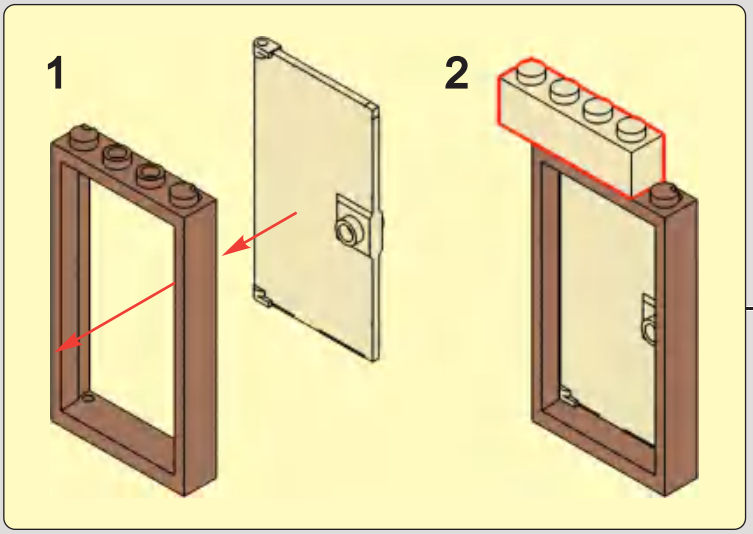

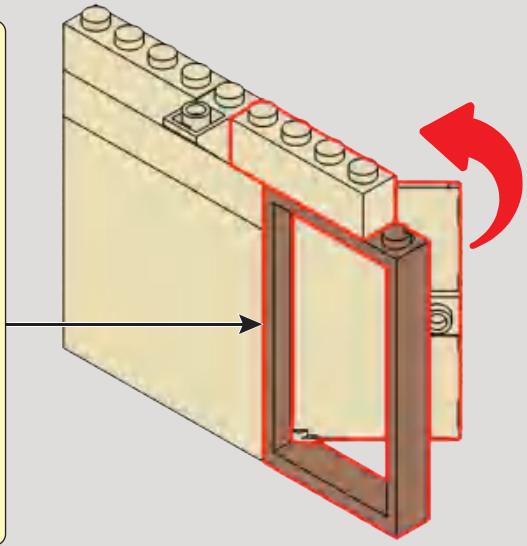

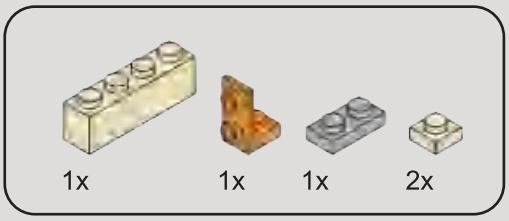

73

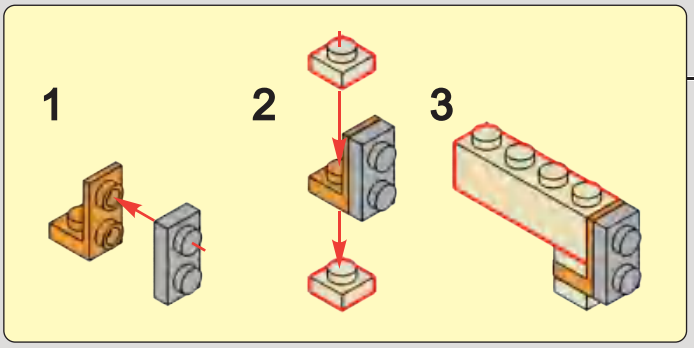

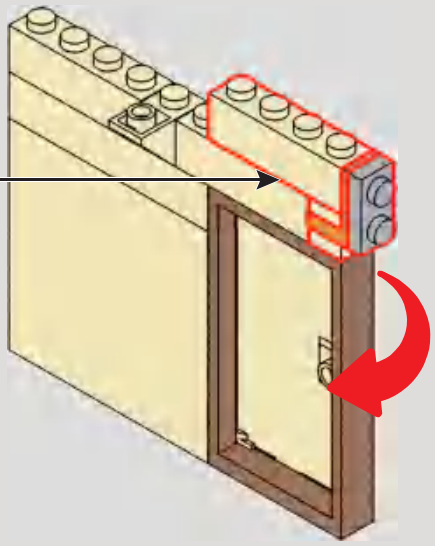

74

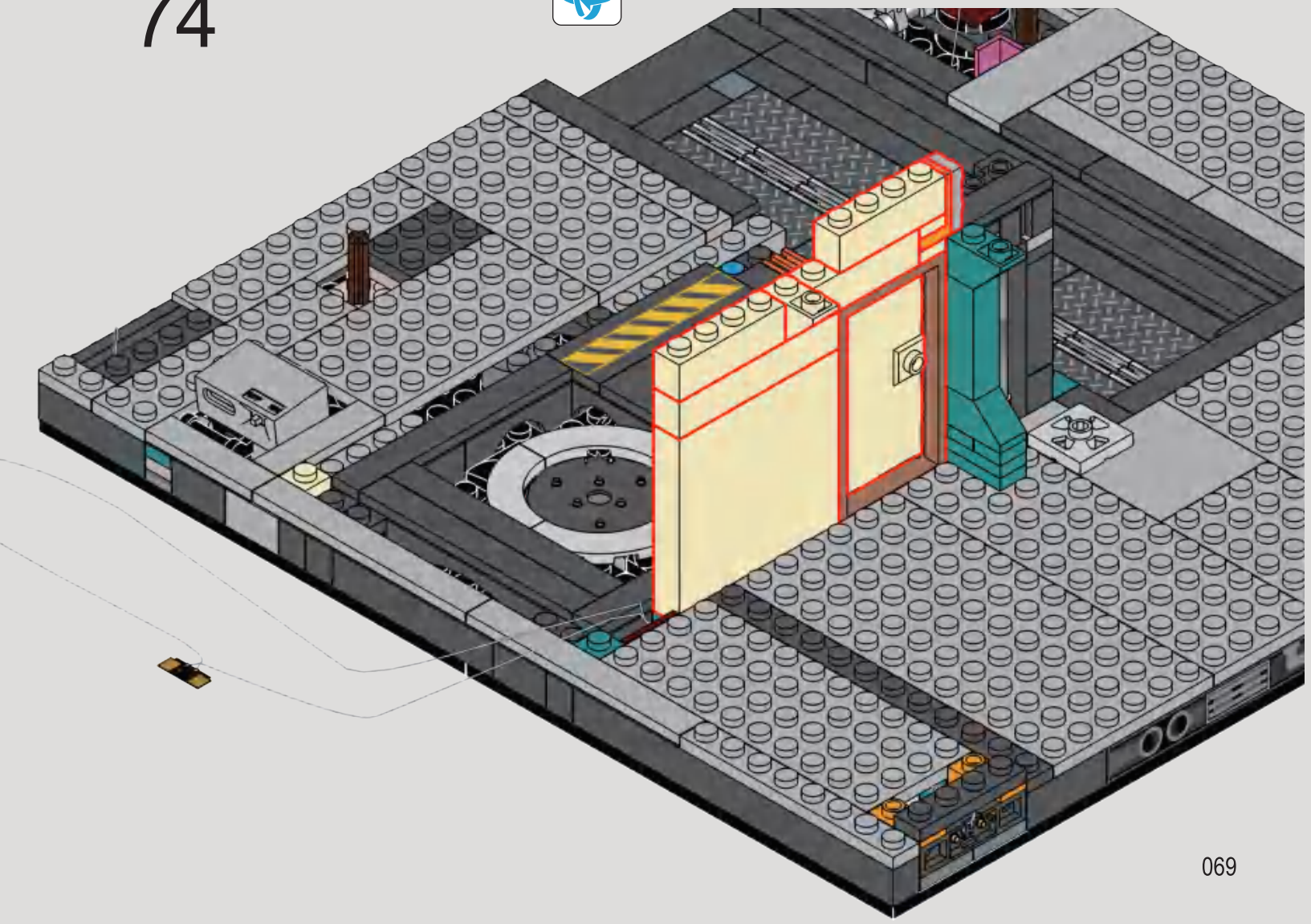

75

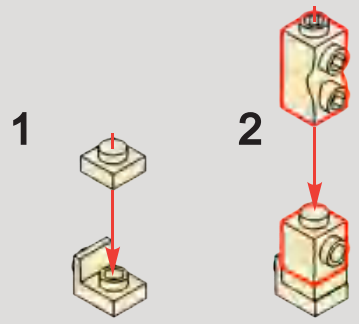

76

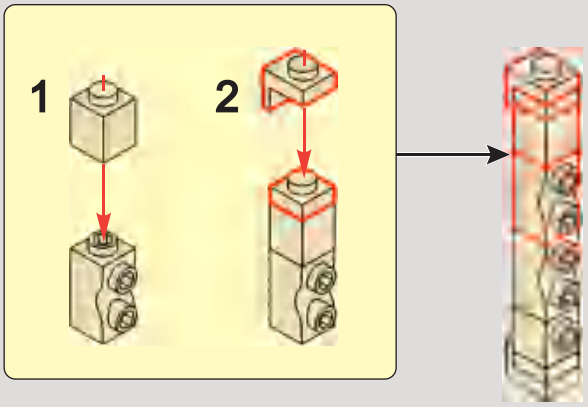

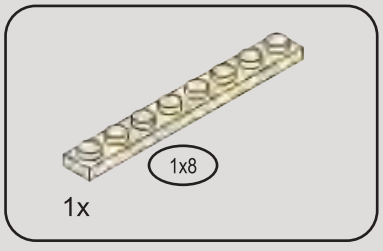

77

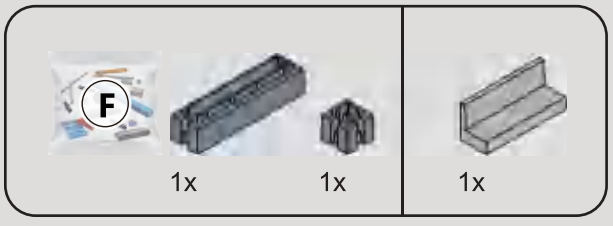

78

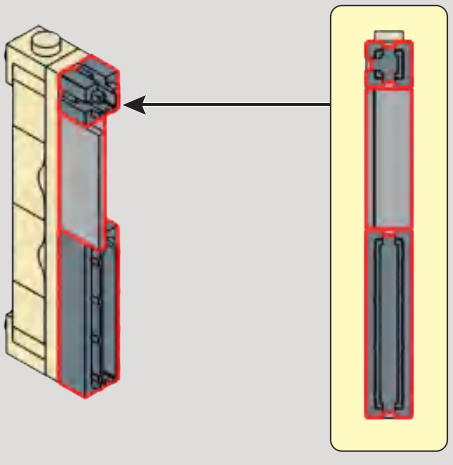

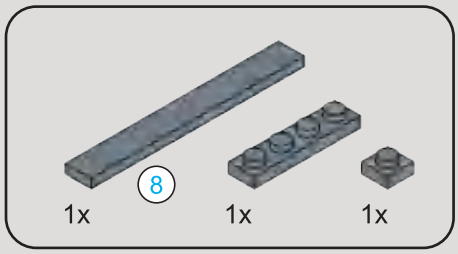

79

1

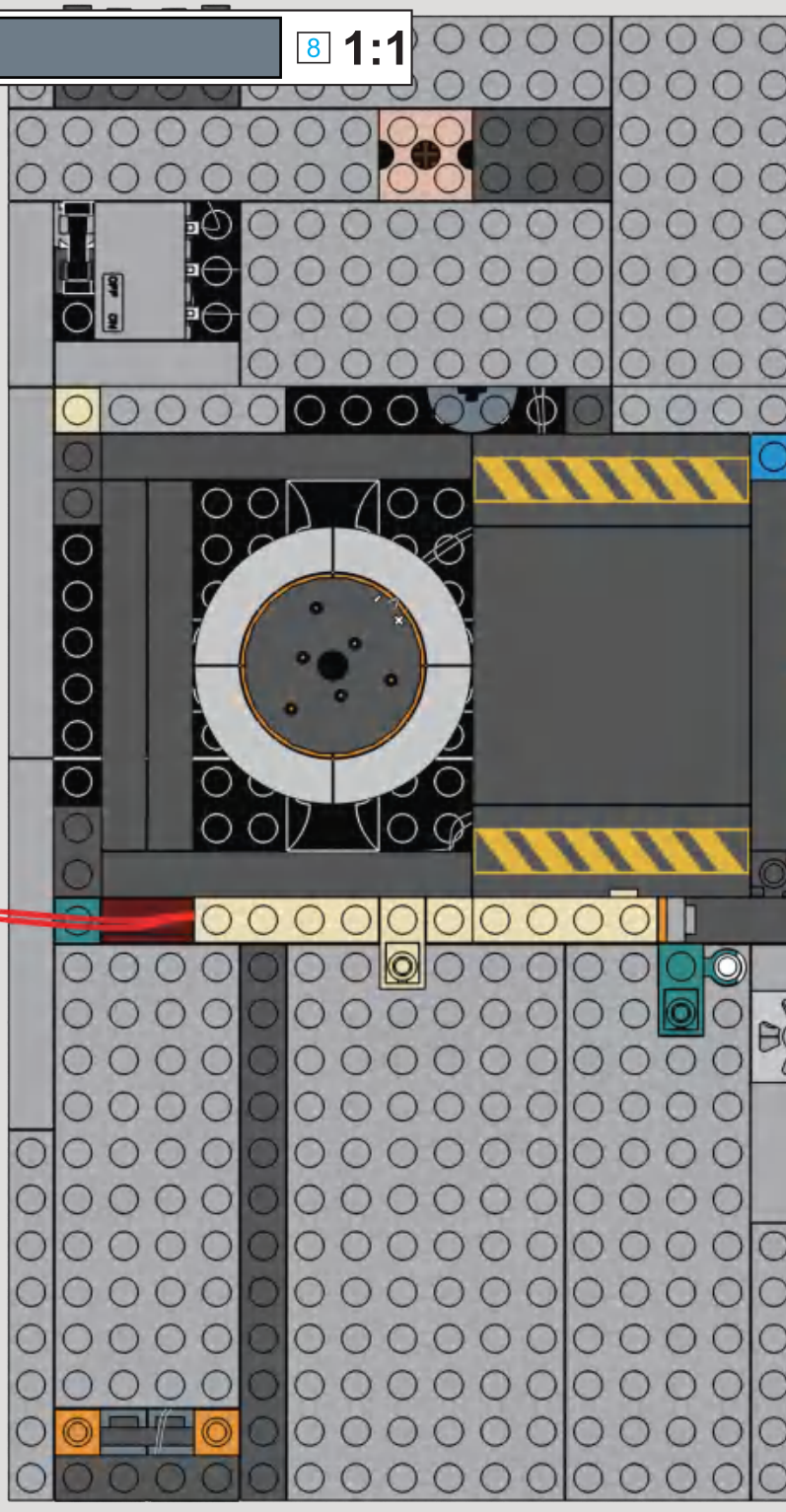

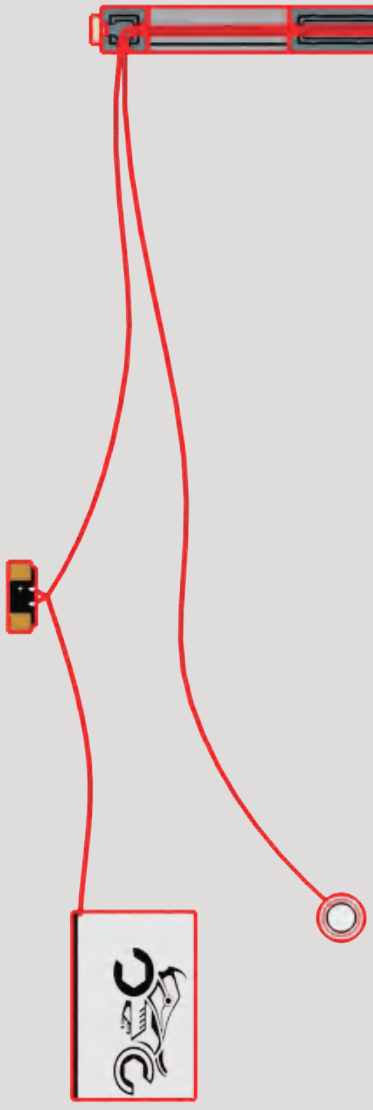

2

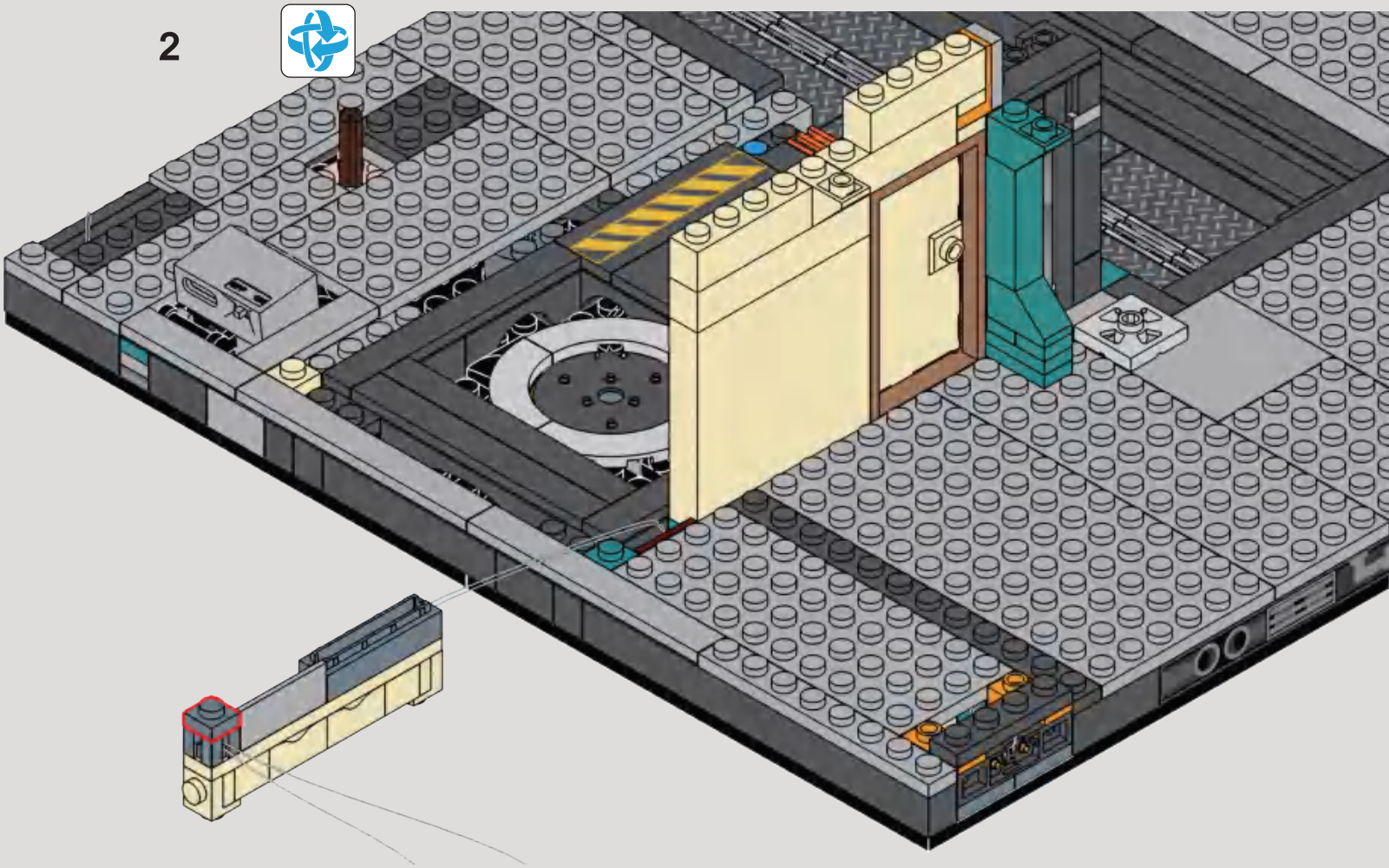

3

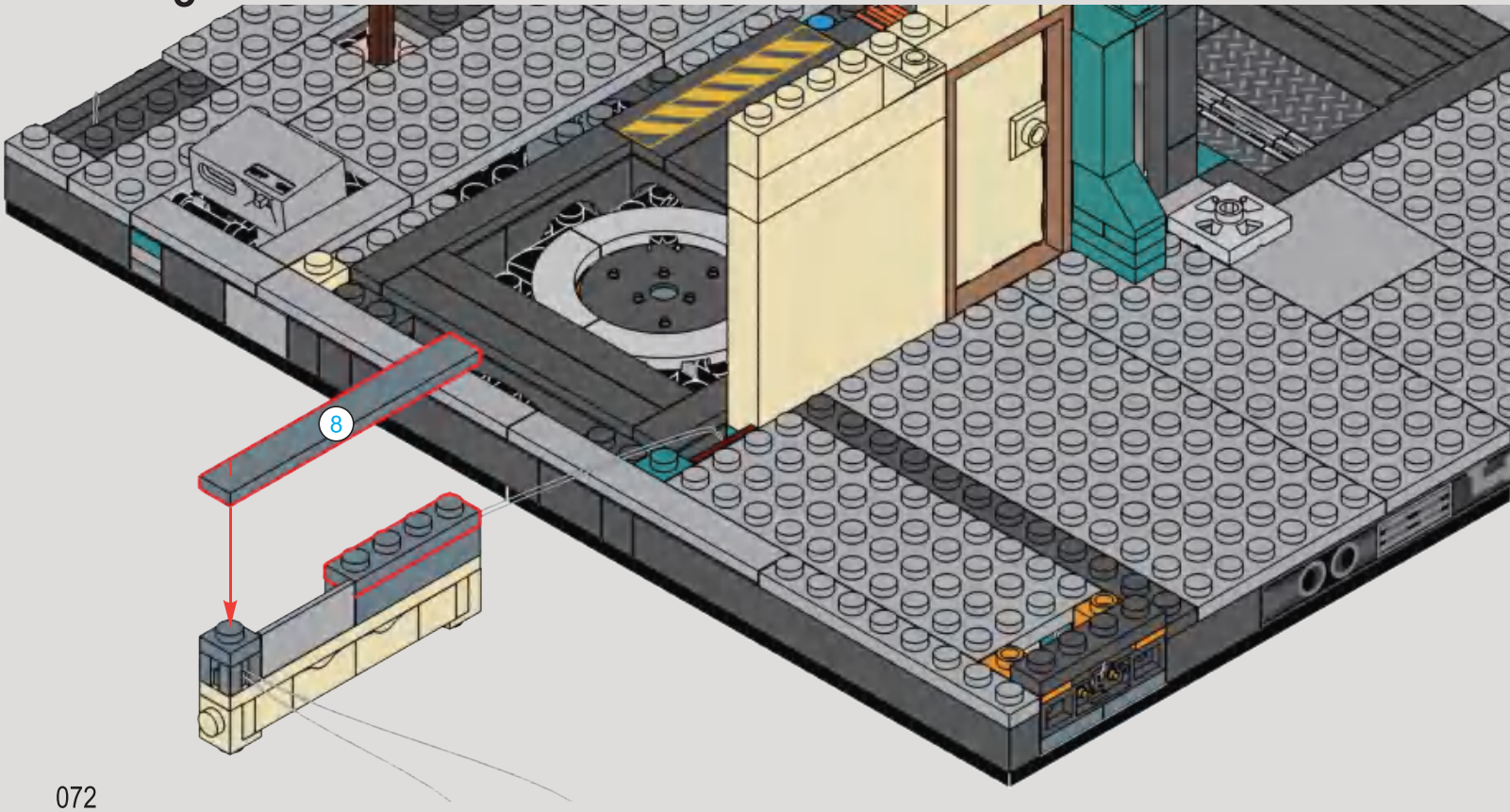

80

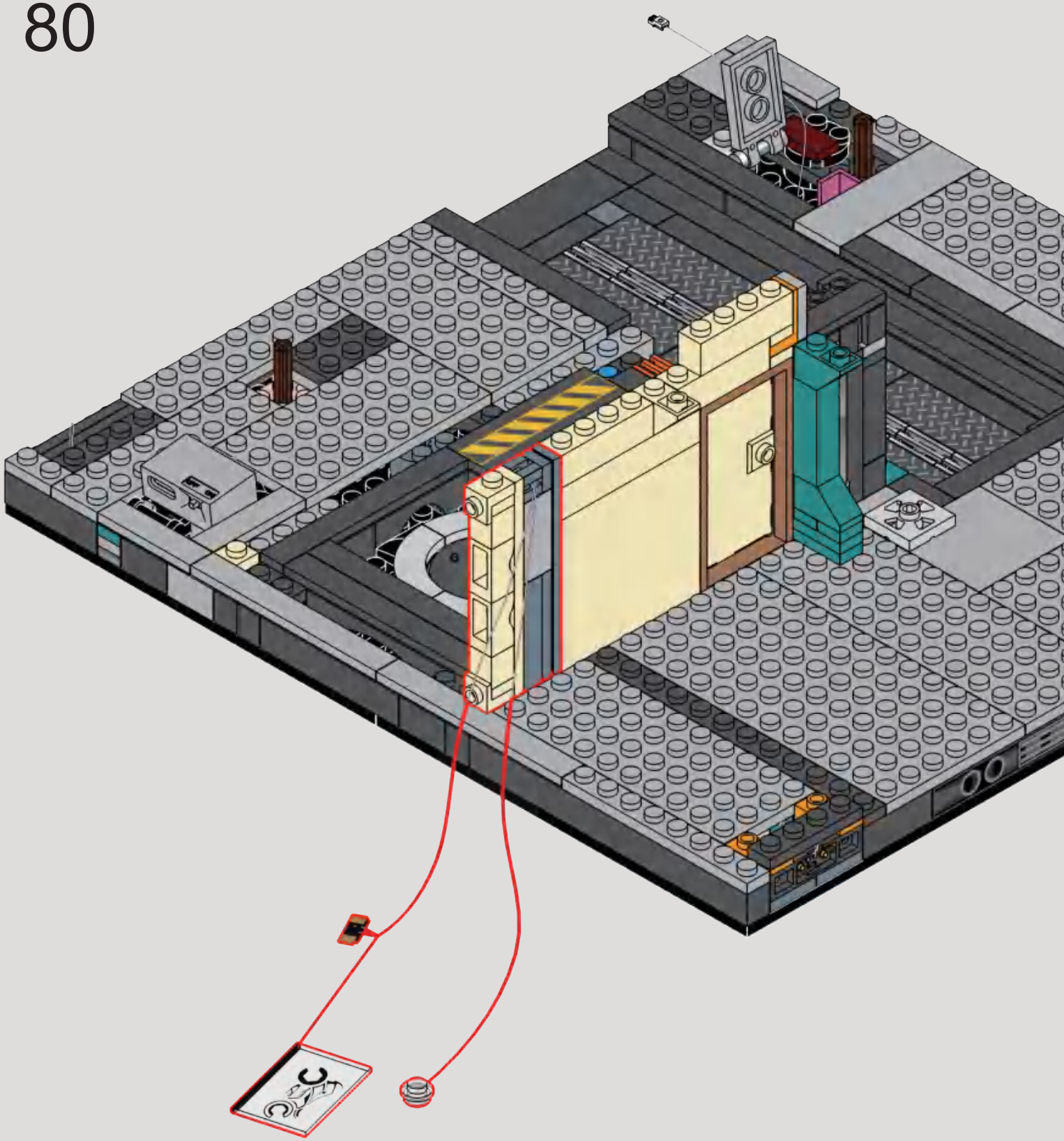

81

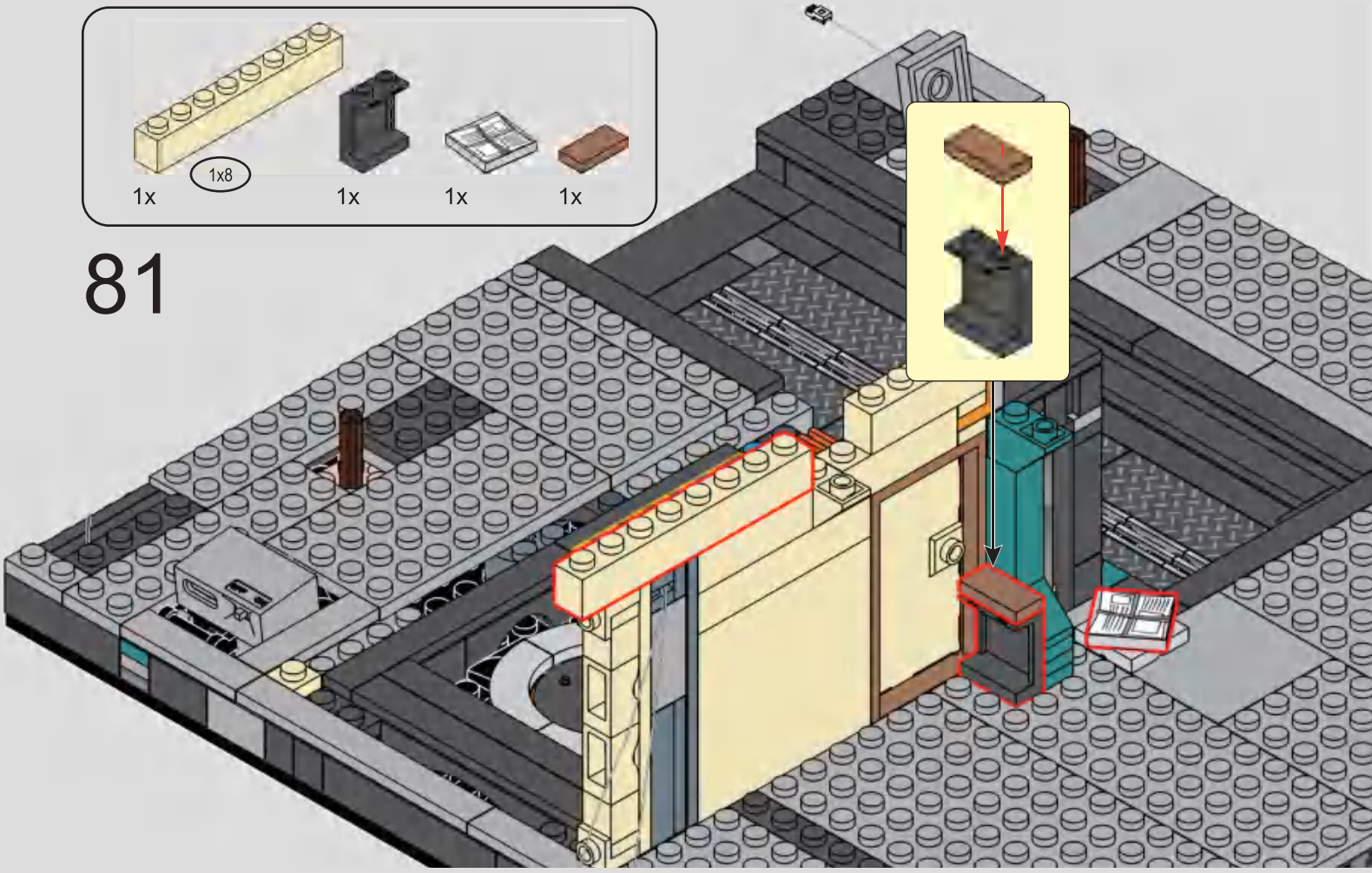

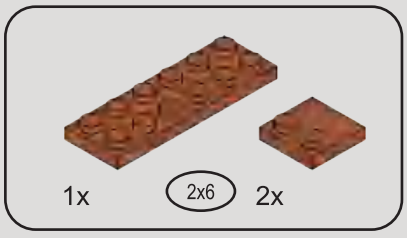

82

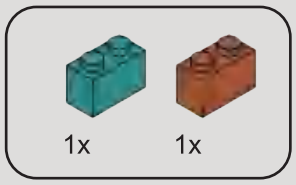

83

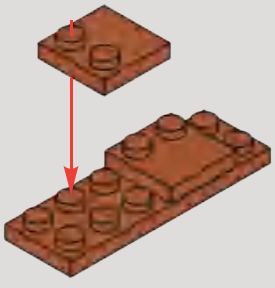

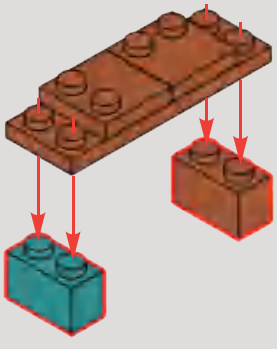

84

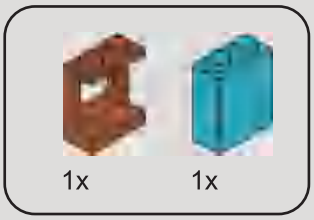

85

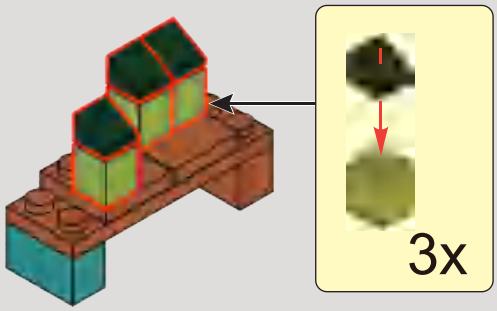

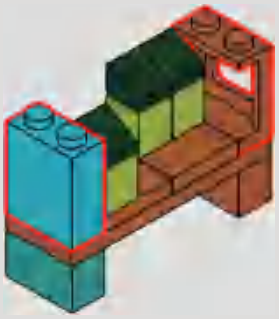

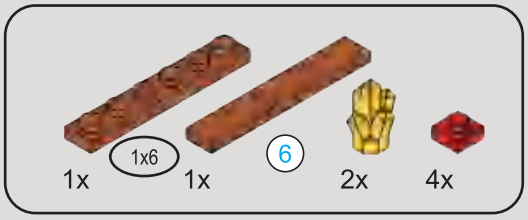

86

87

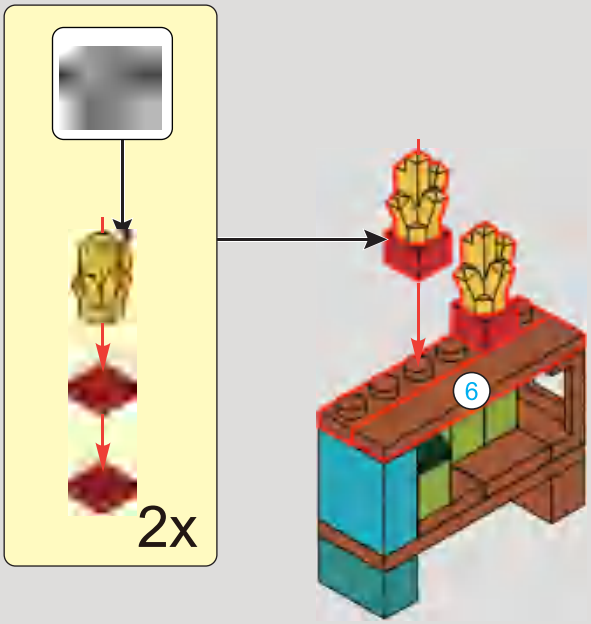

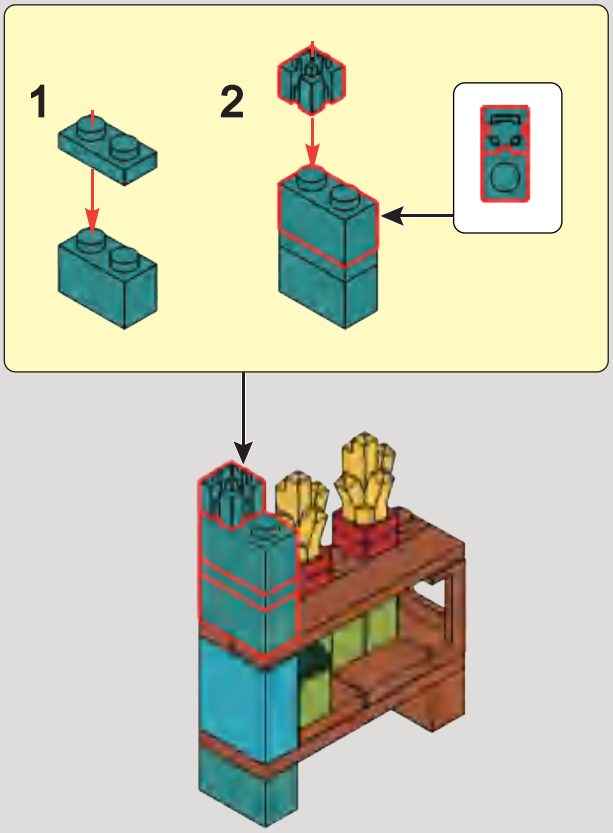

88

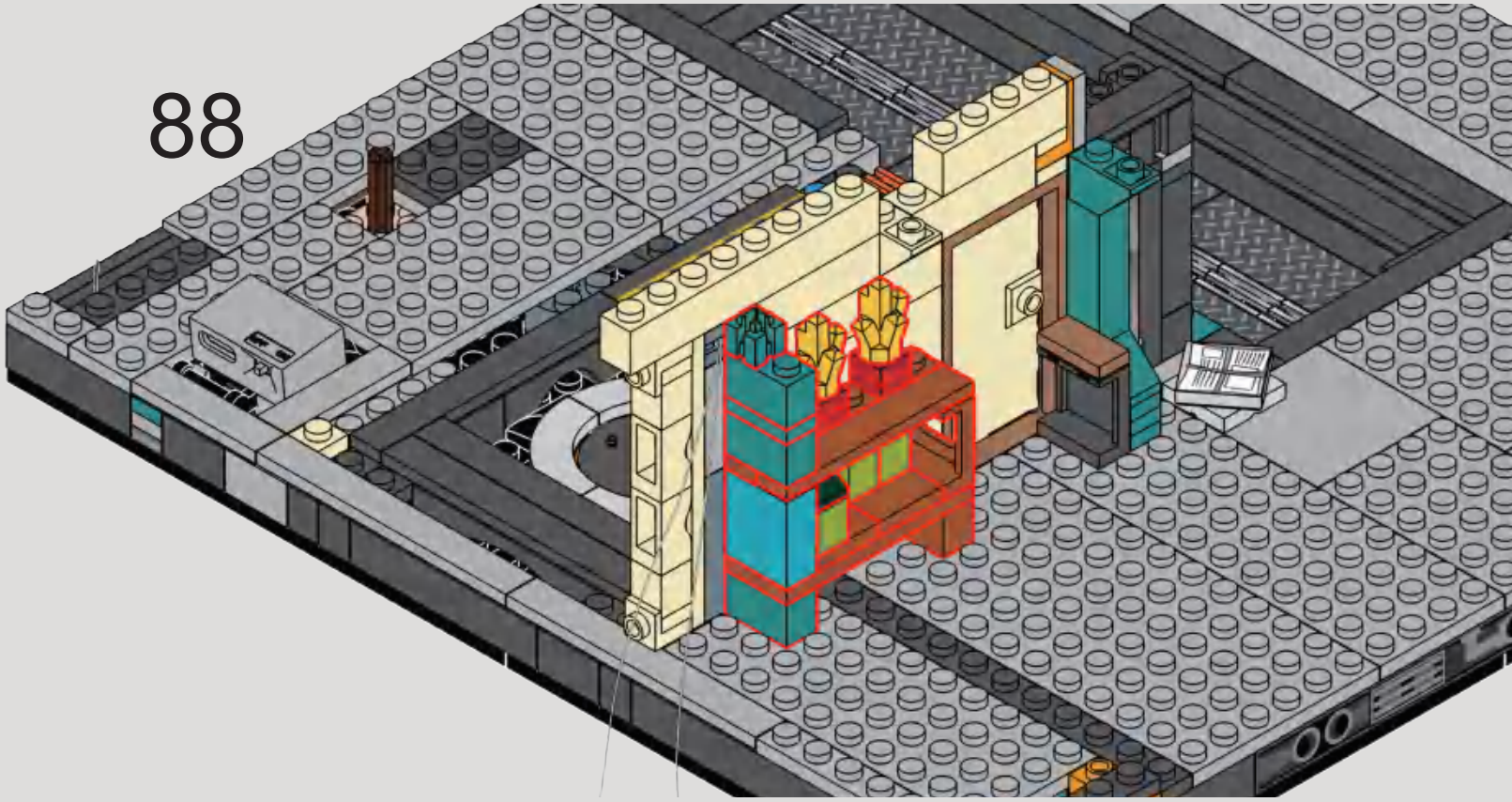

1x 2x

89

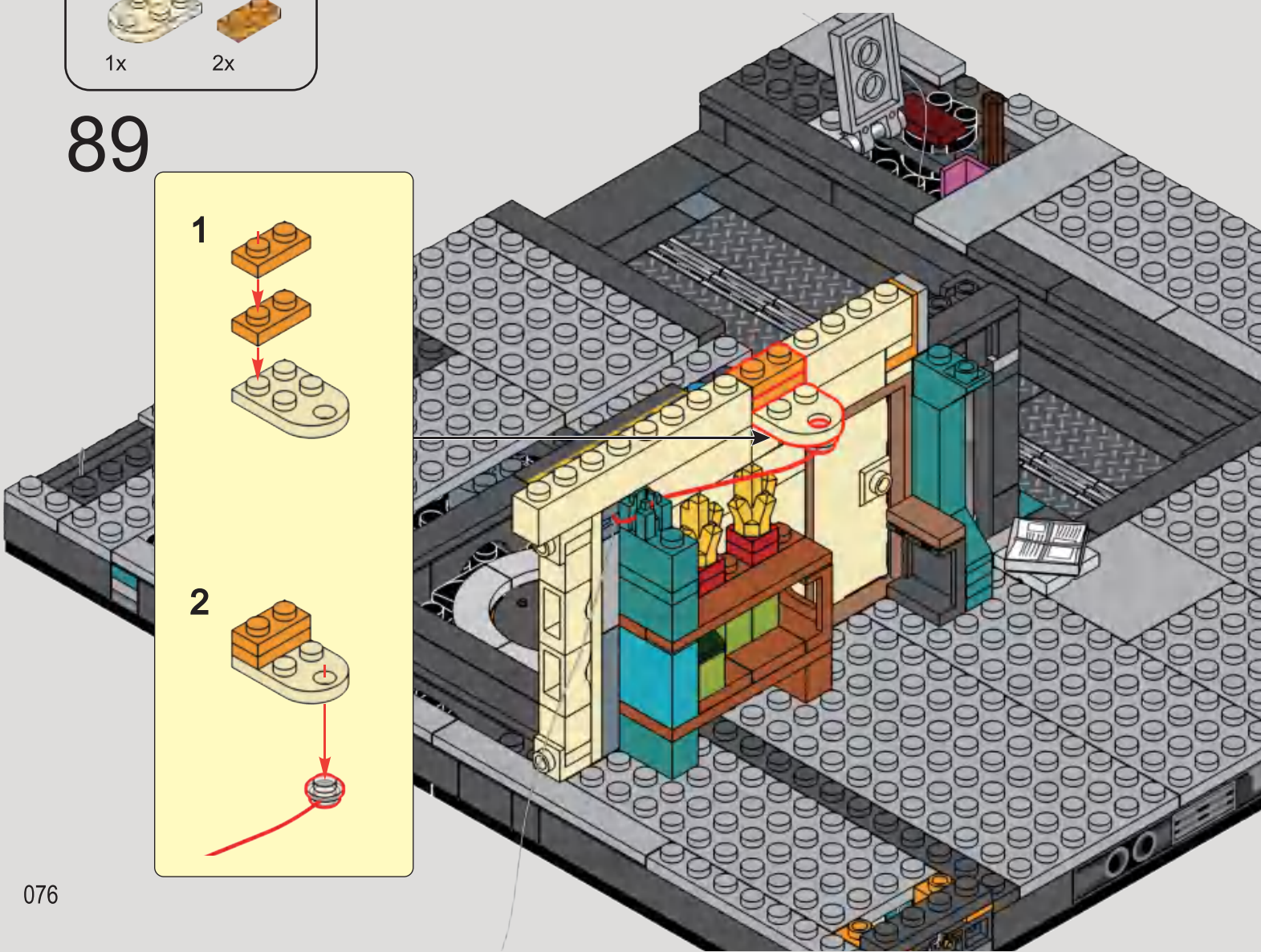

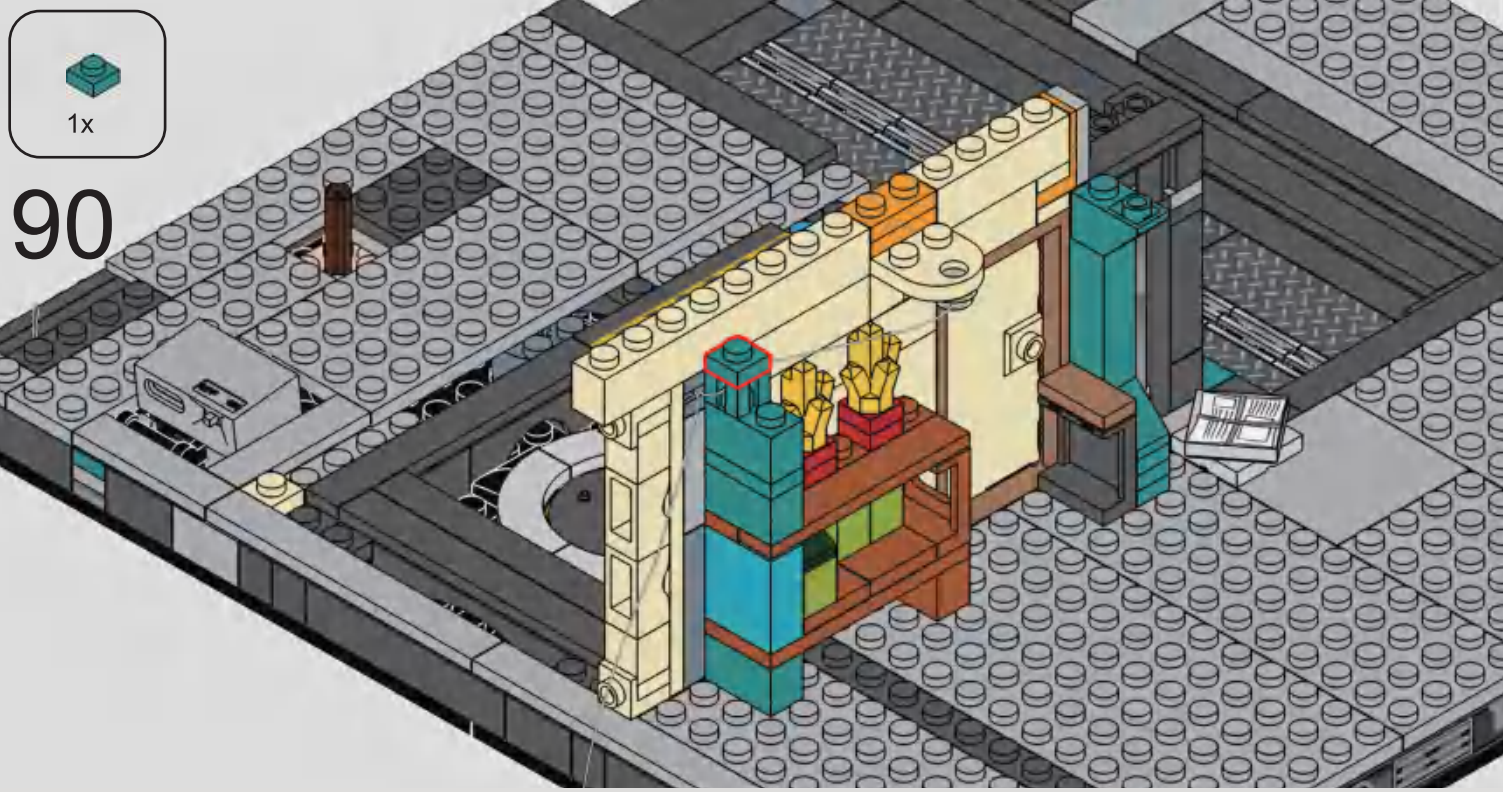

90

91

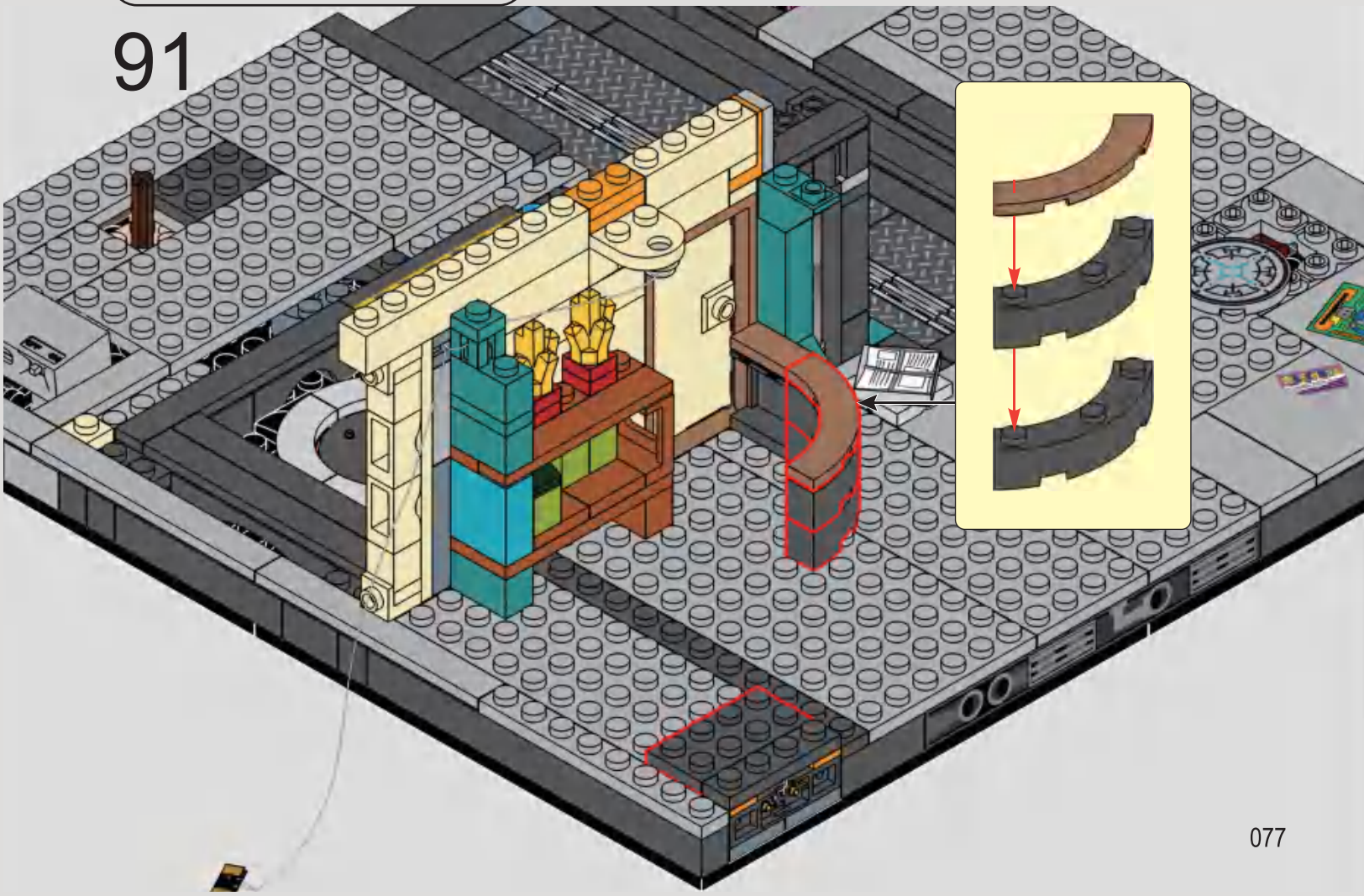

92

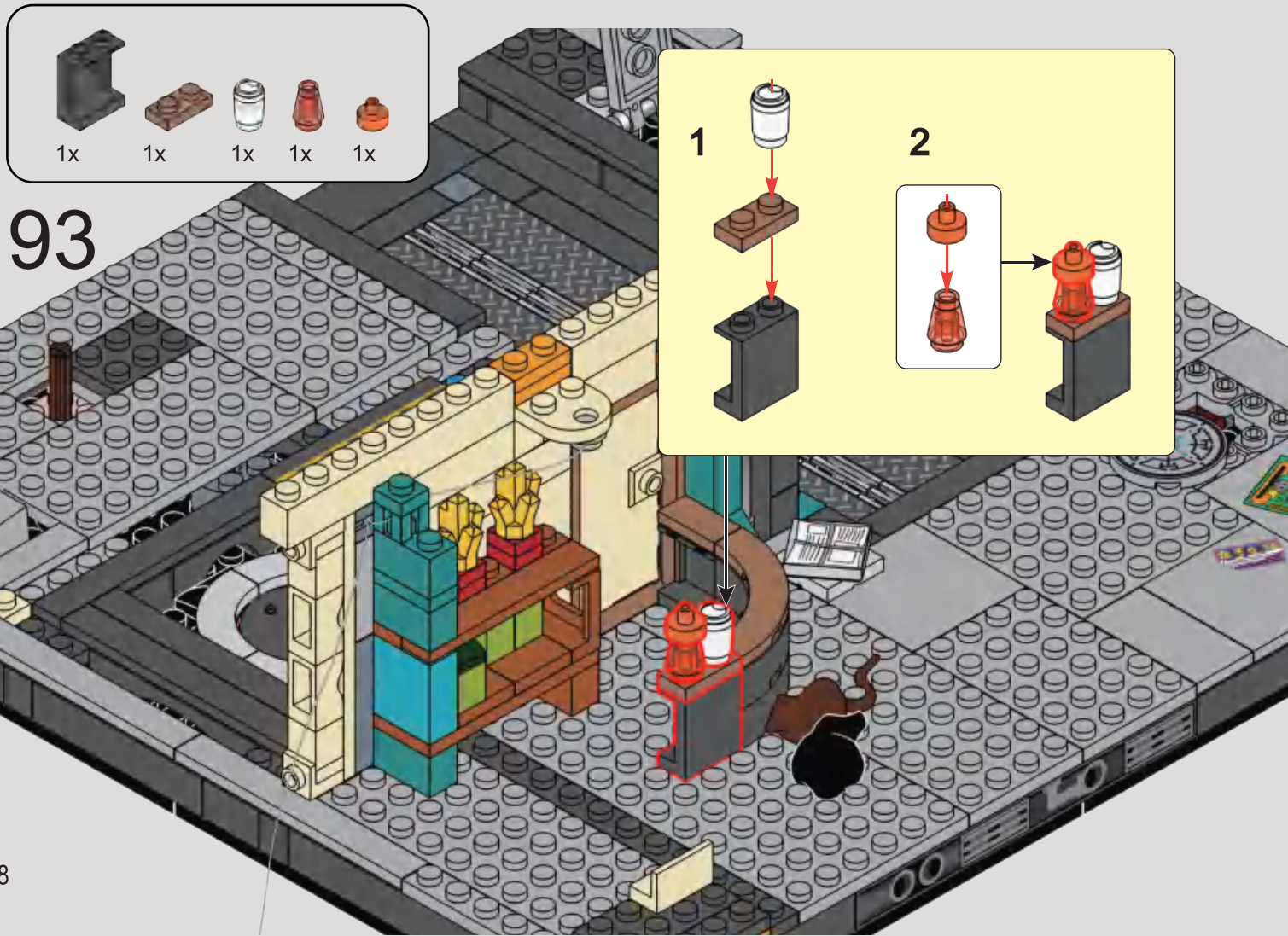

93

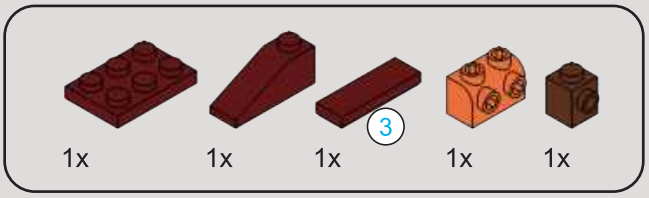

94

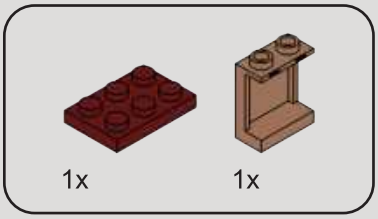

95

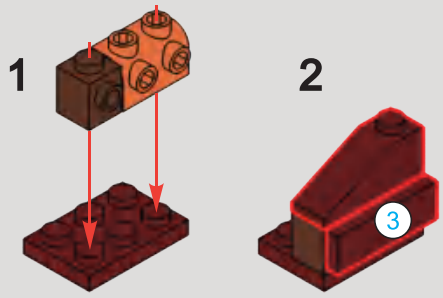

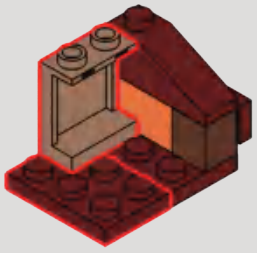

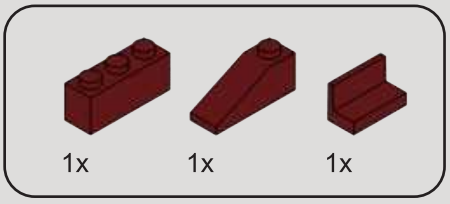

96

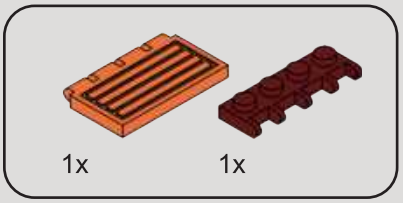

97

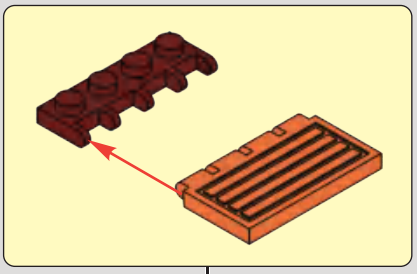

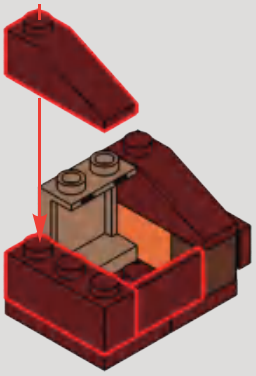

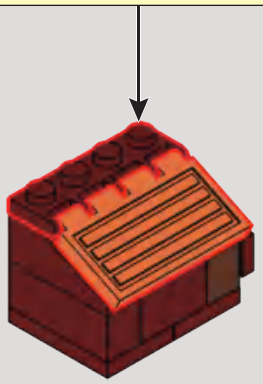

98

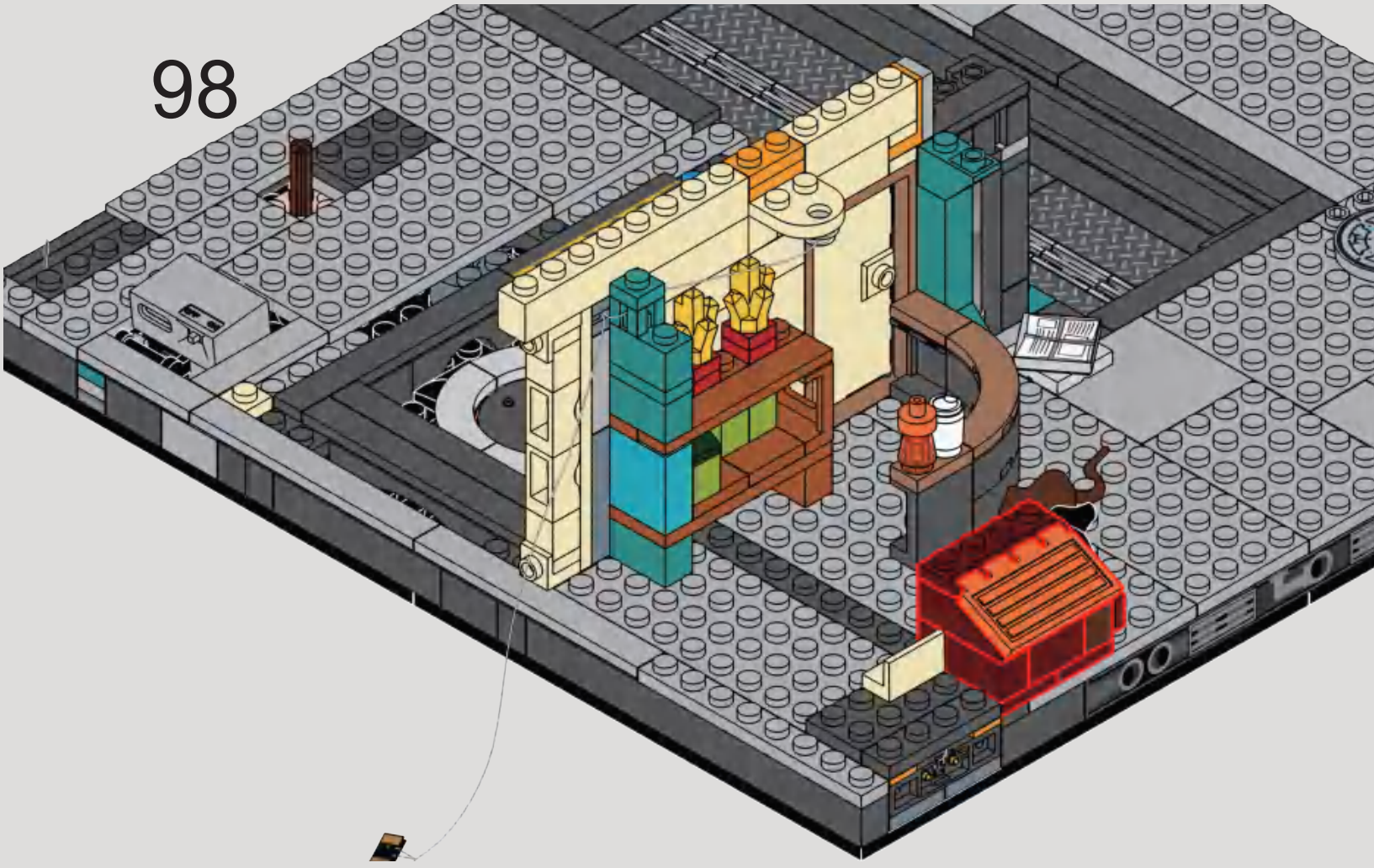

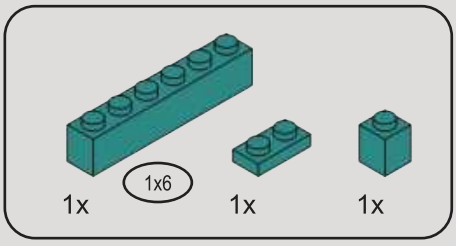

99

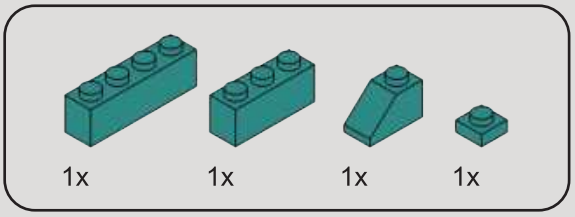

100

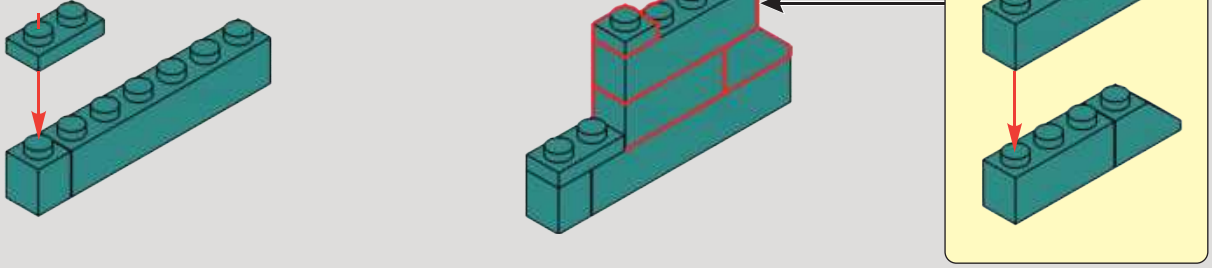

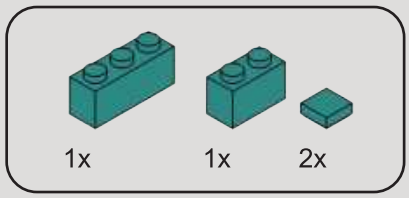

101

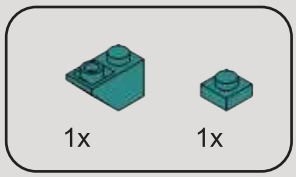

102

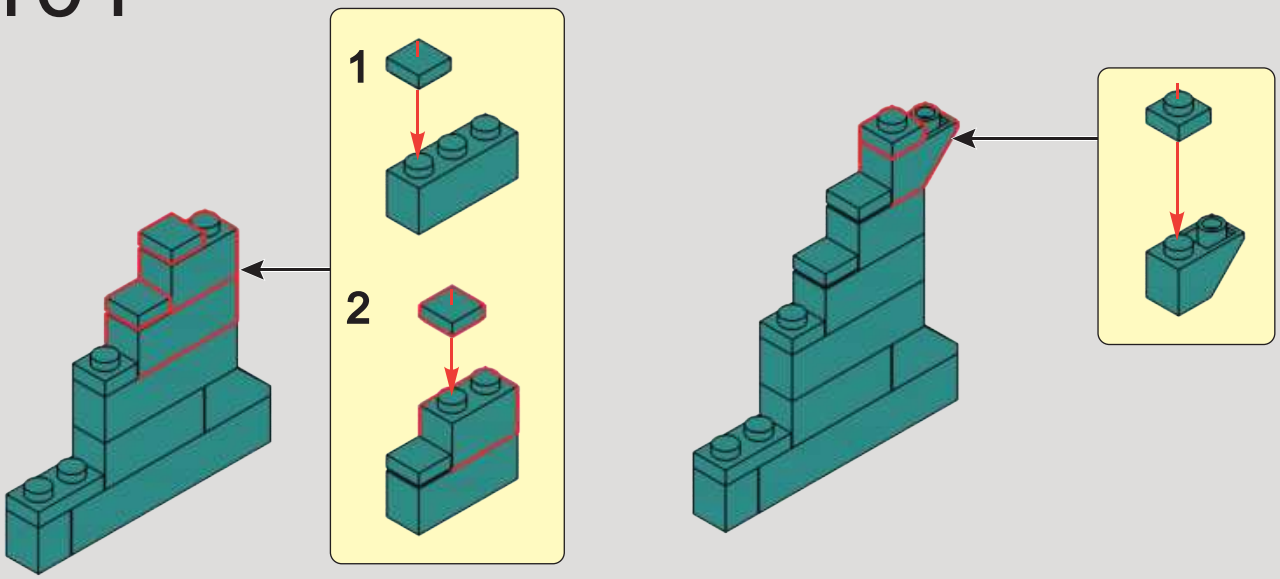

103

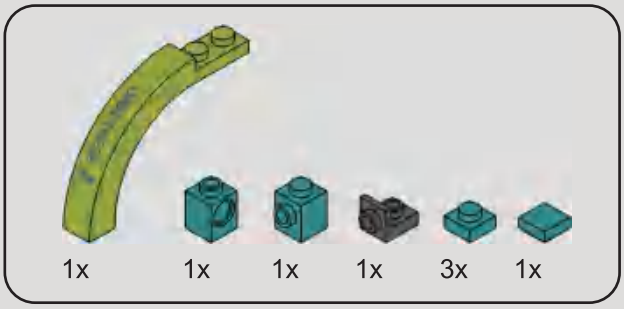

104

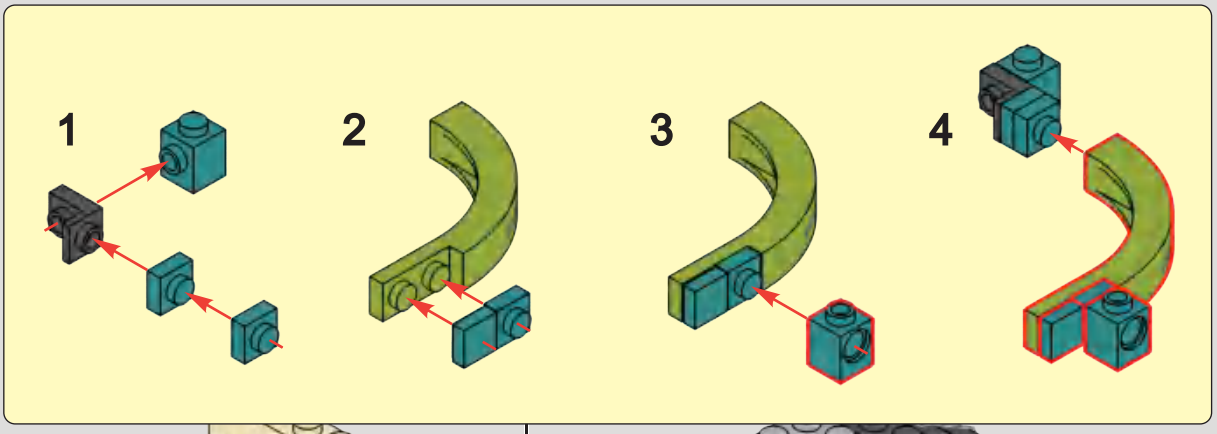

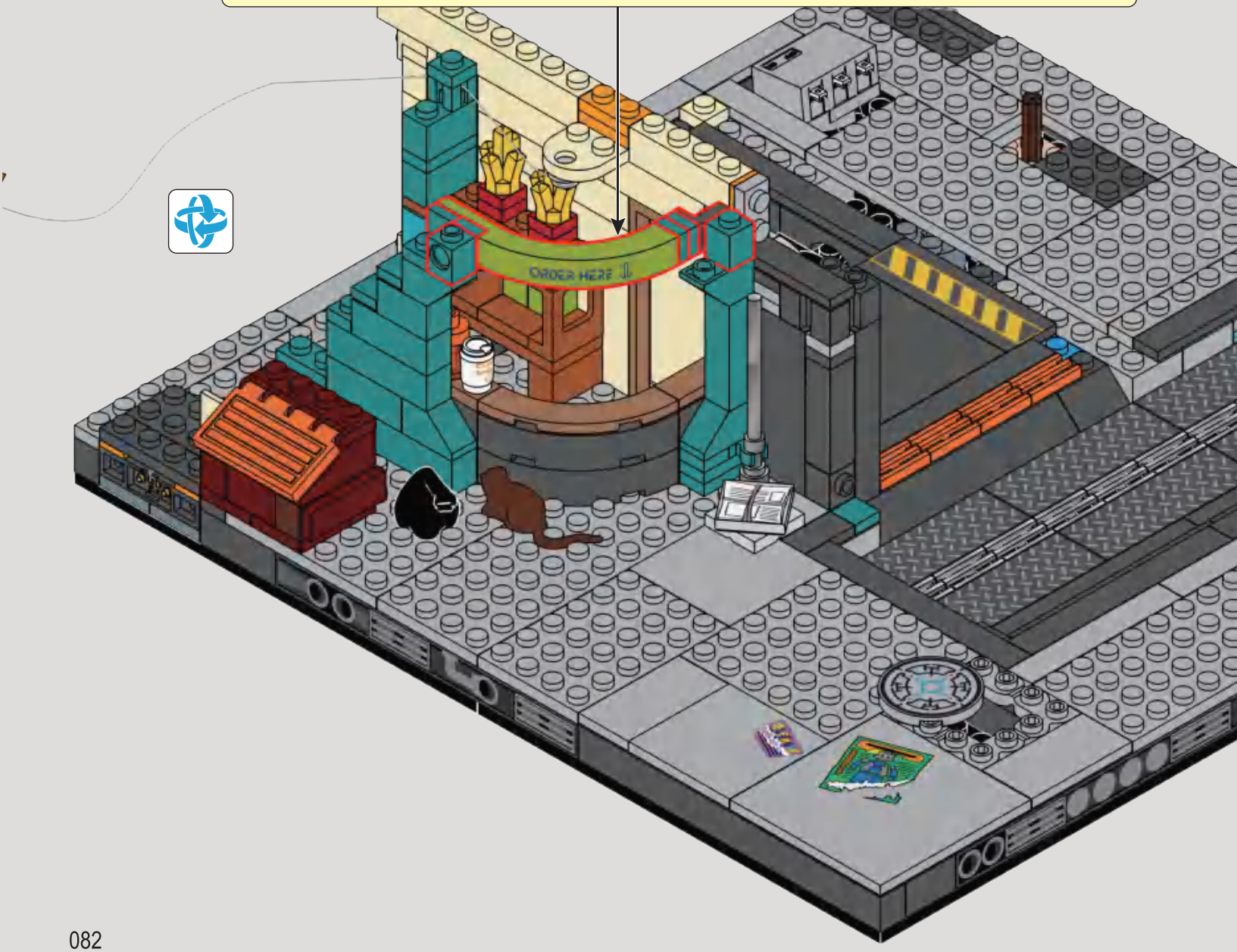

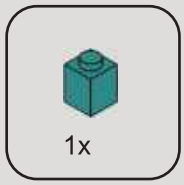

105

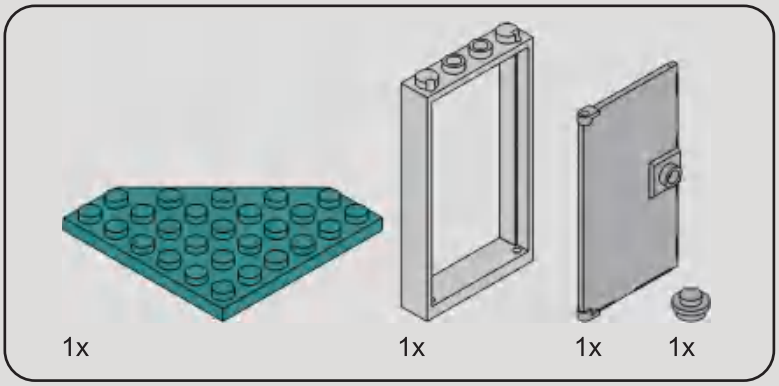

106

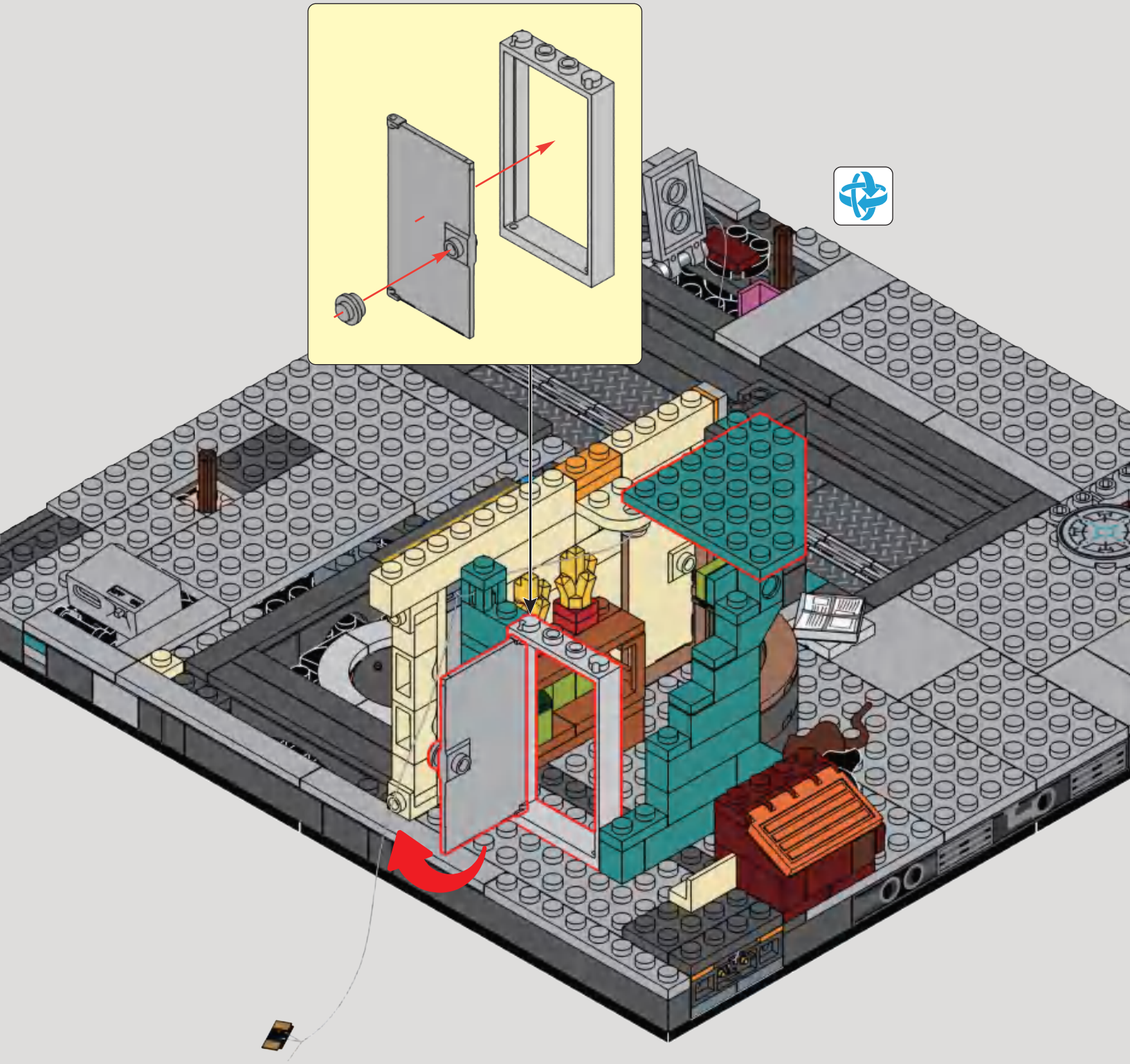

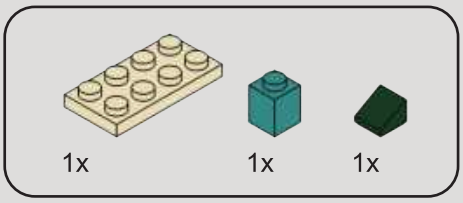

107

1

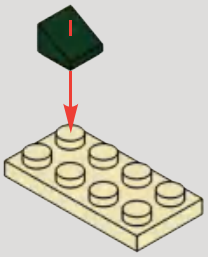

2

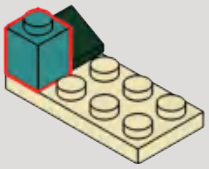

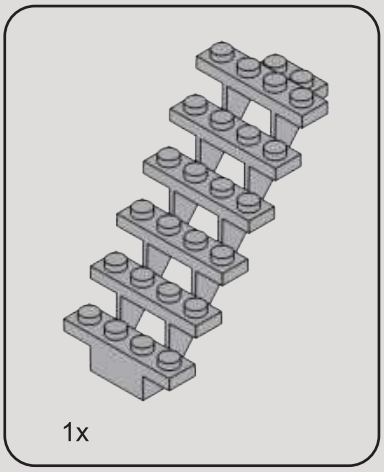

108

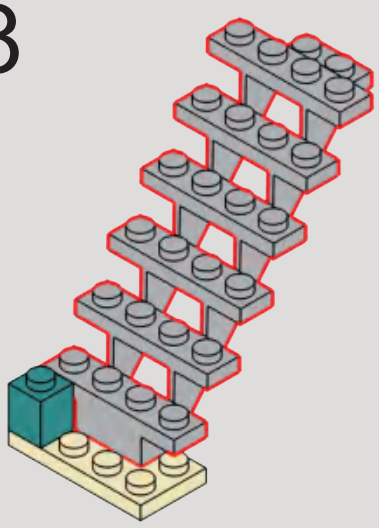

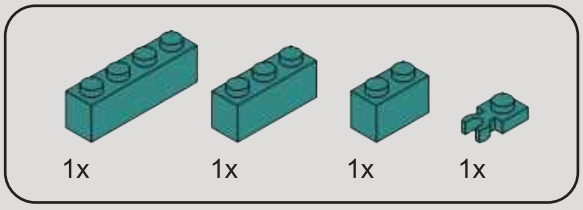

109

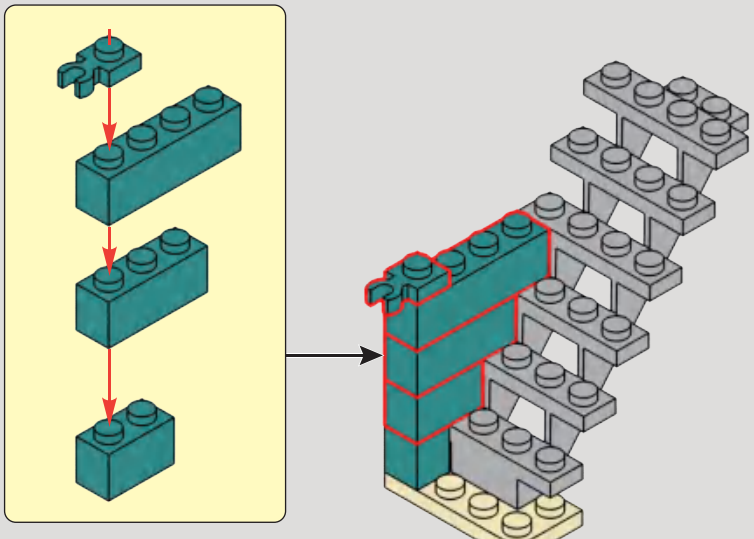

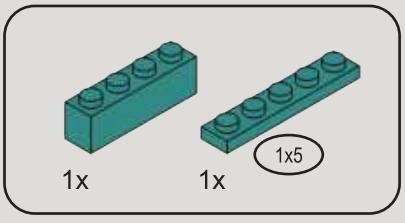

110

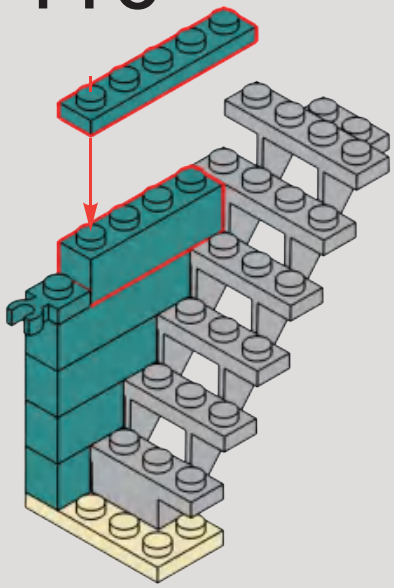

111

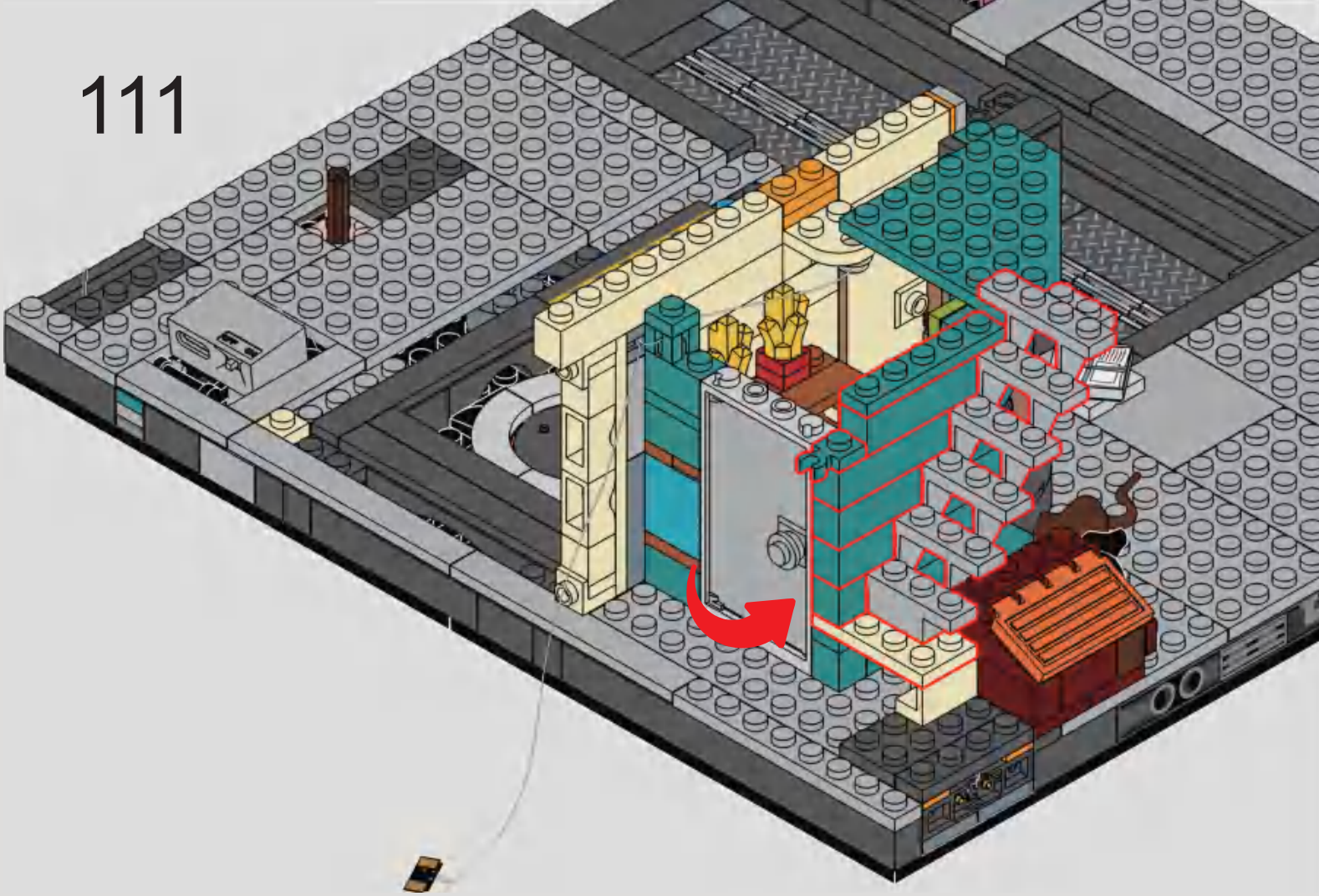

112

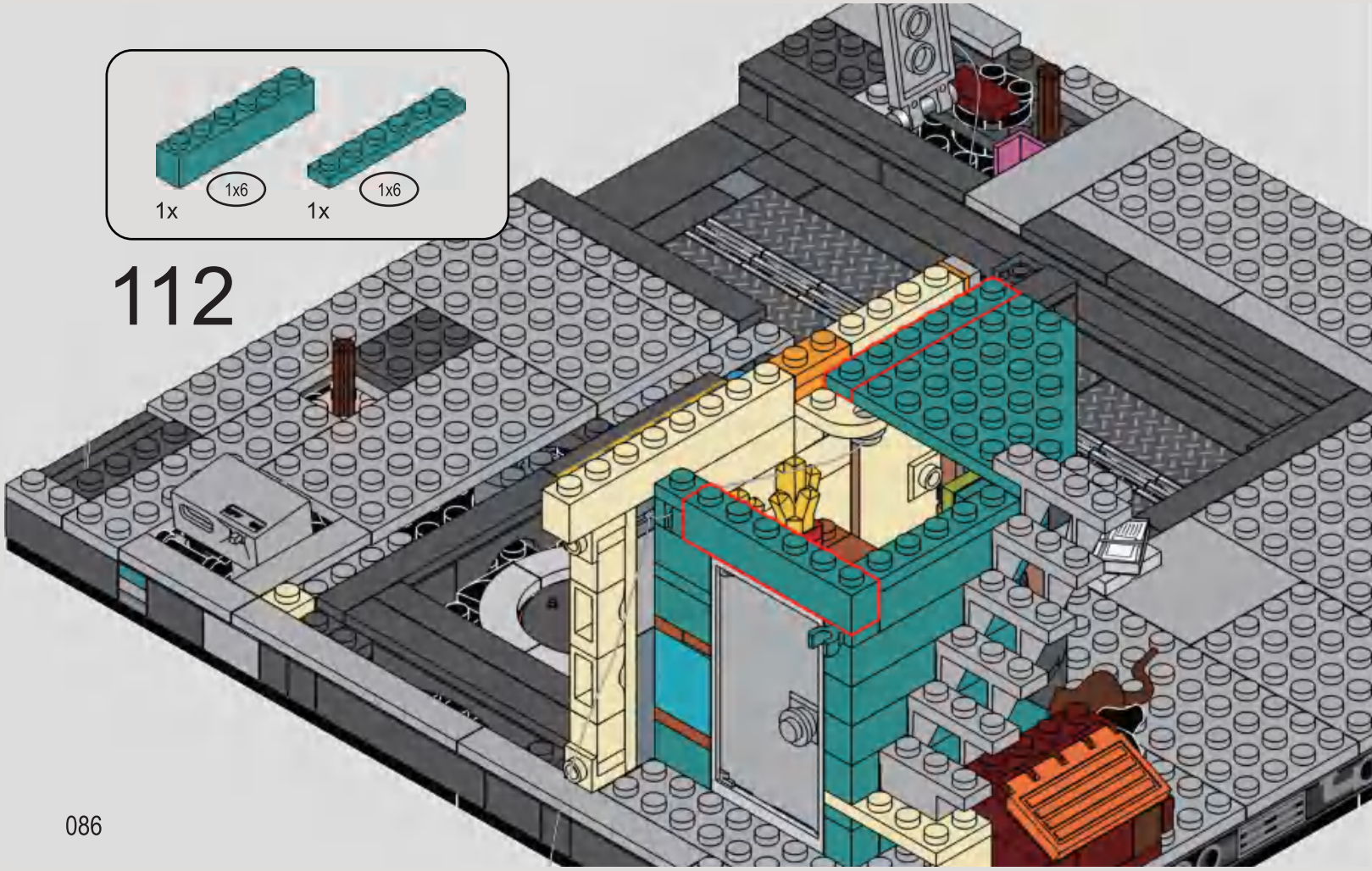

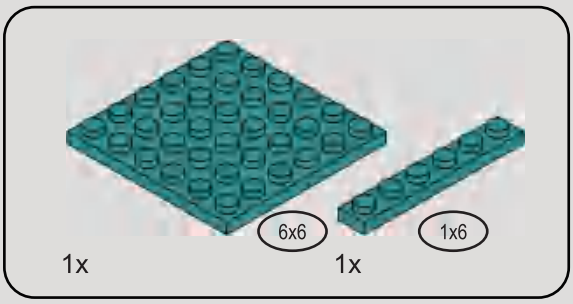

113

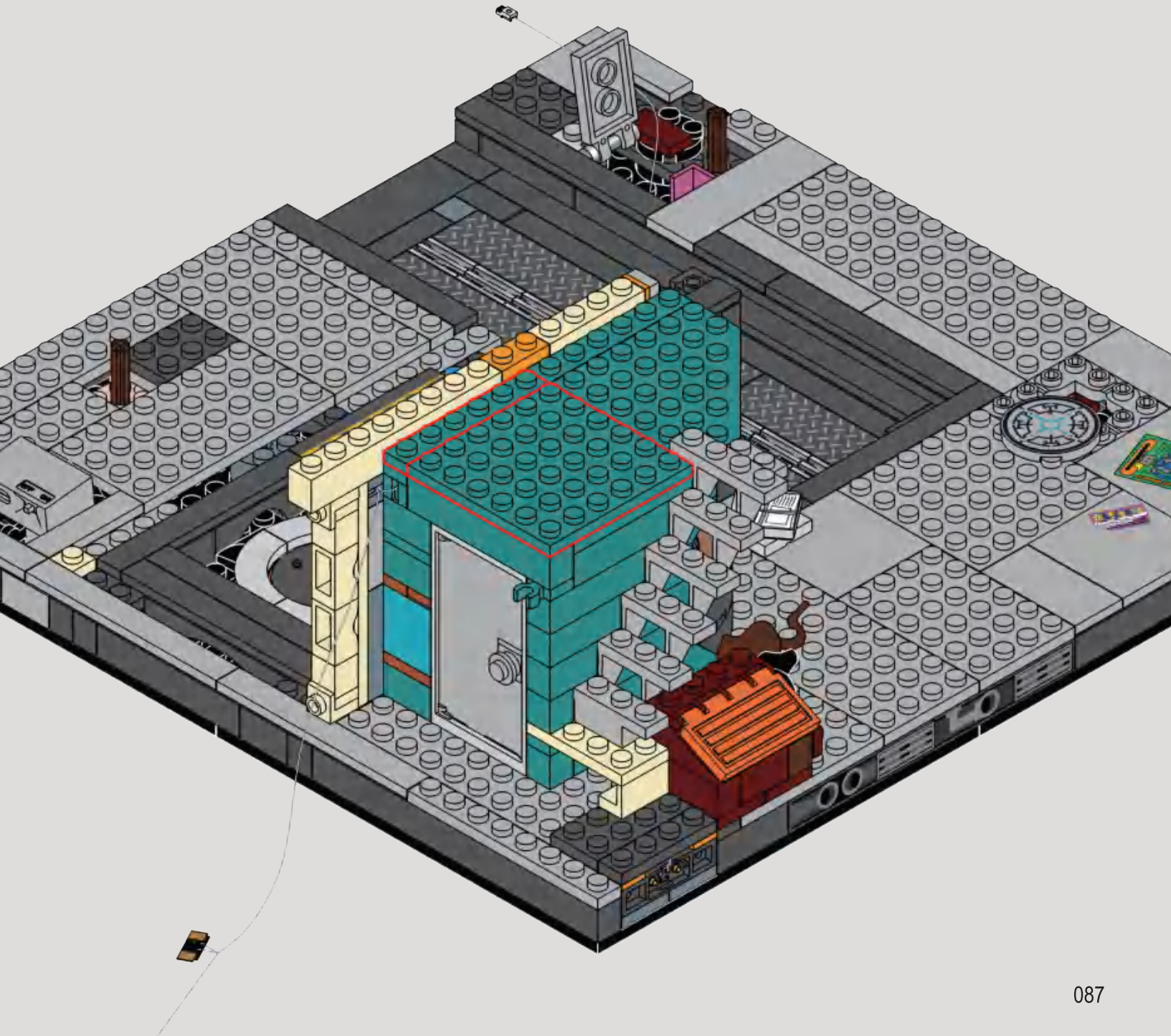

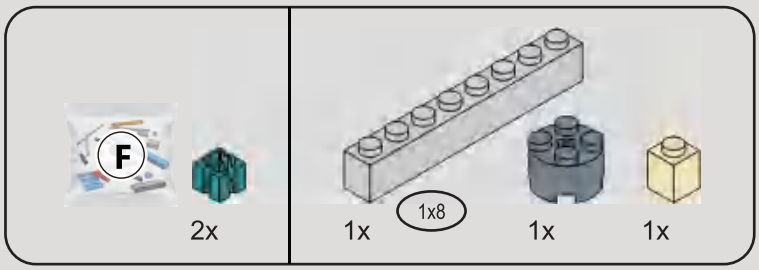

114

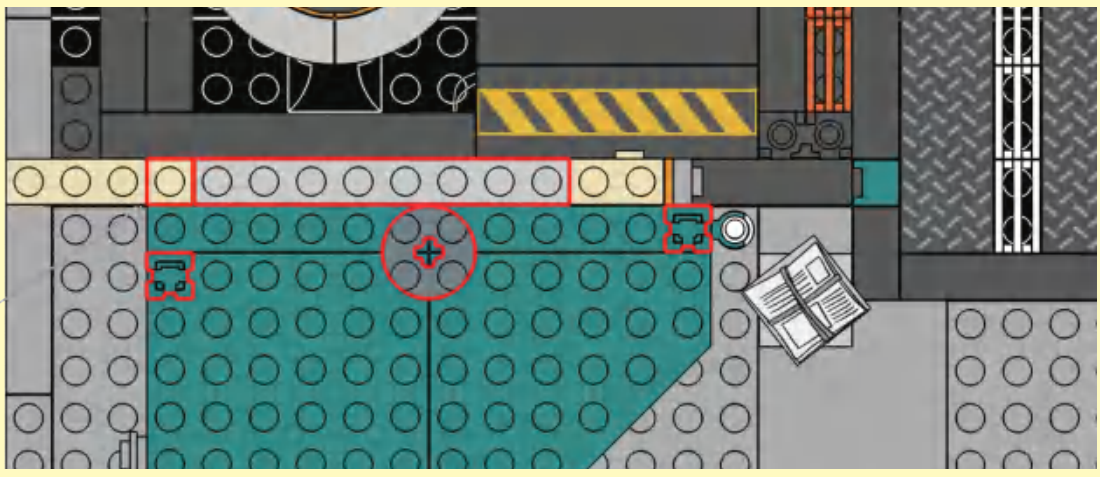

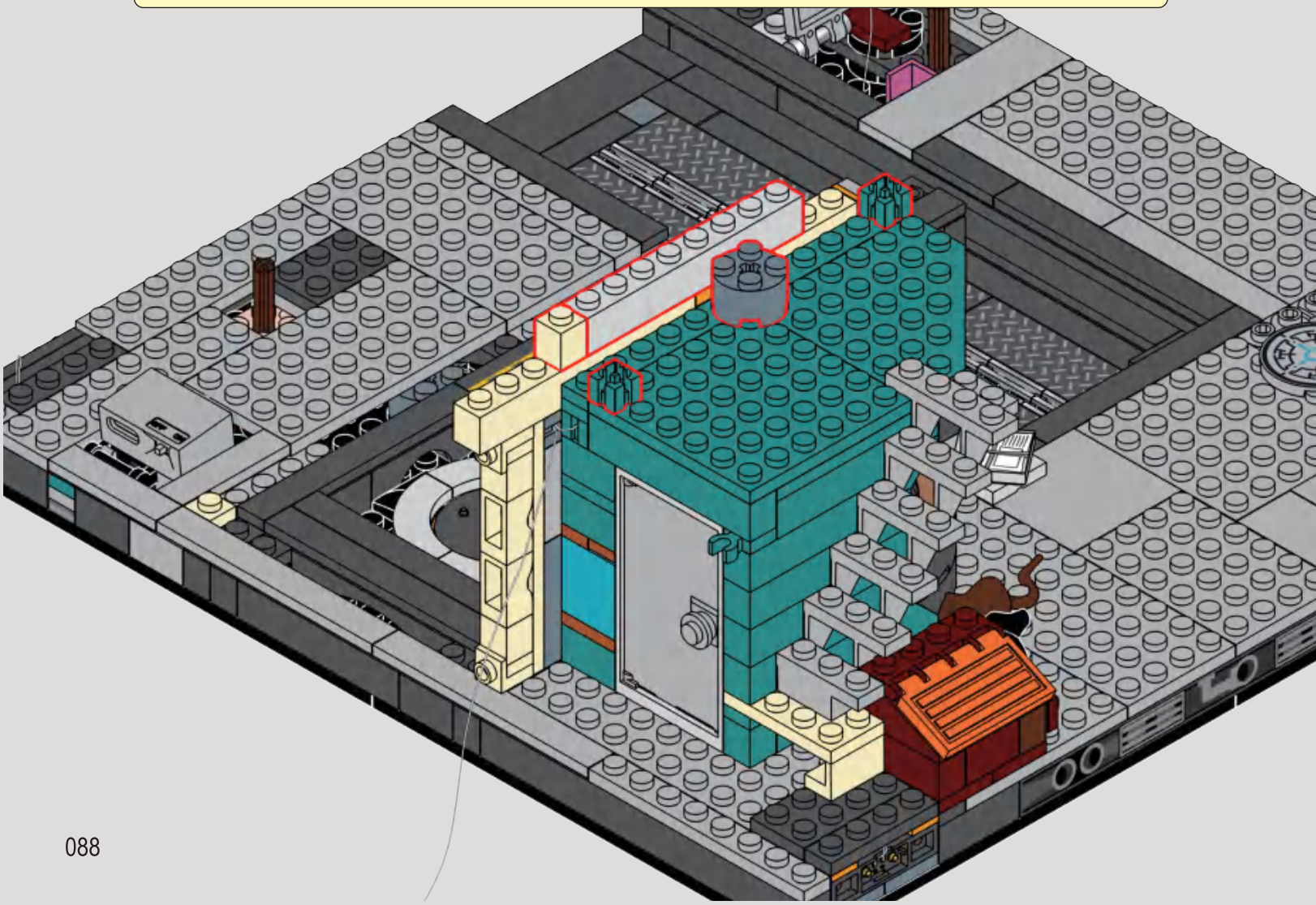

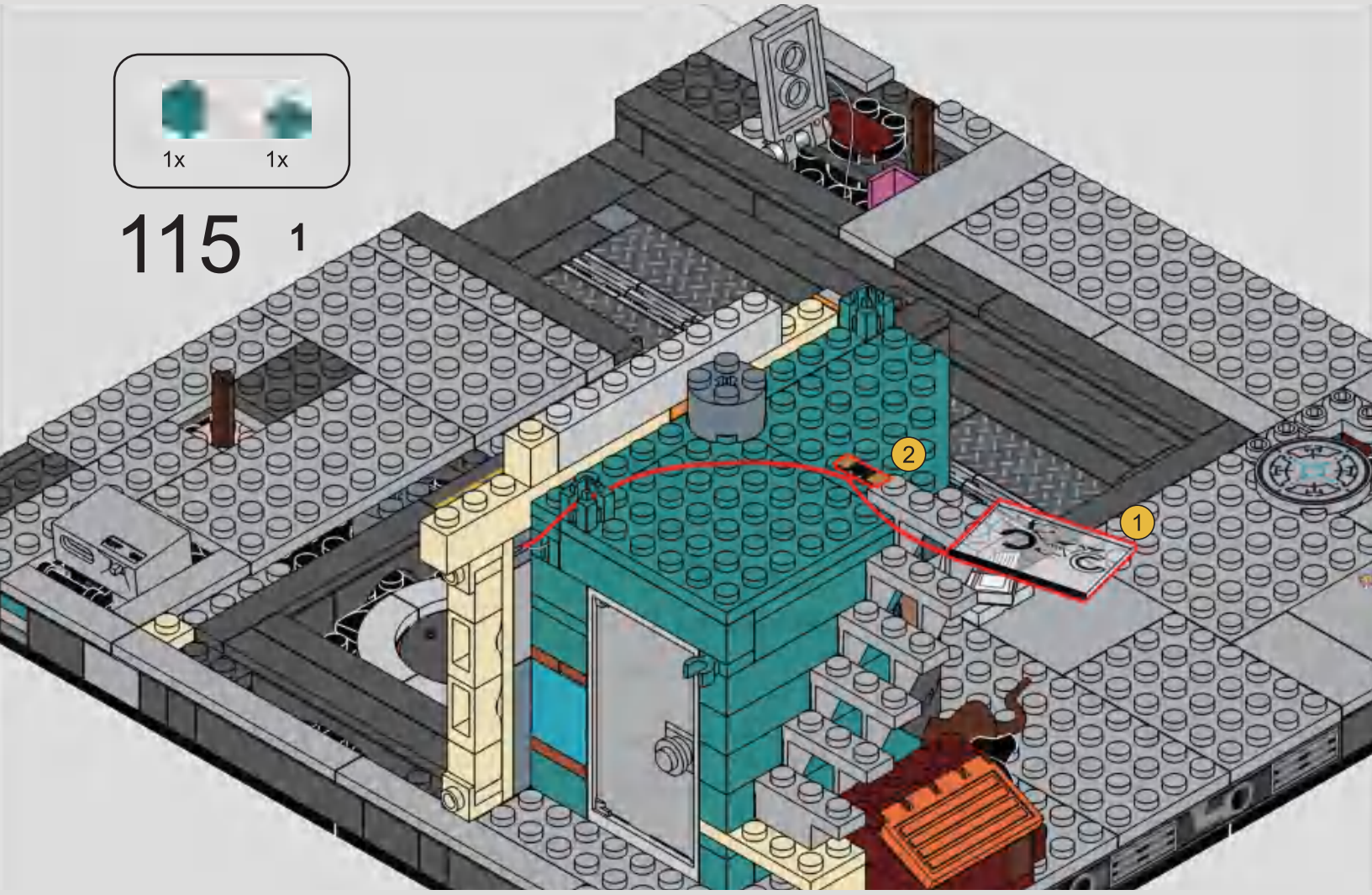
1x
1x
115
1
2
1

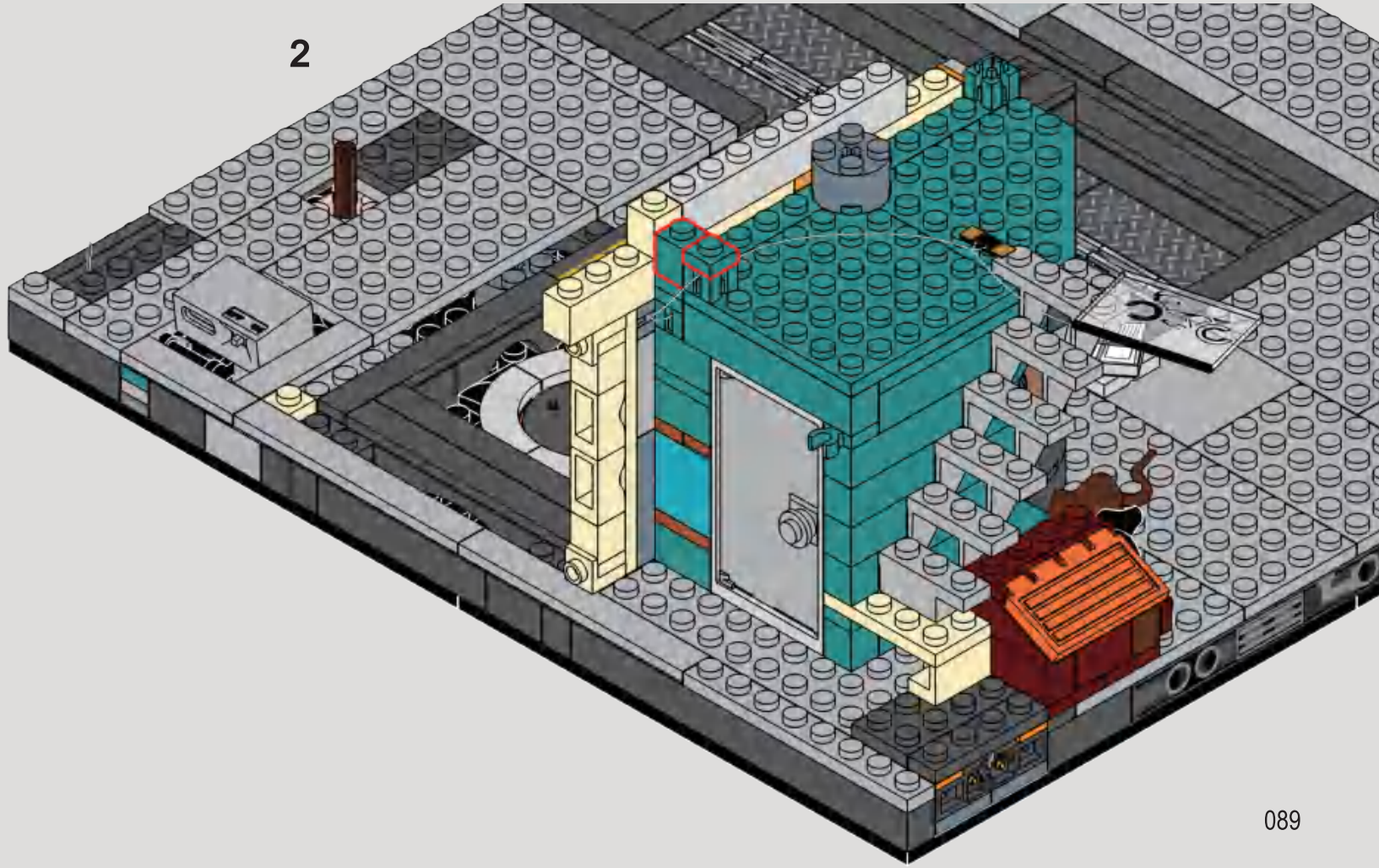
2

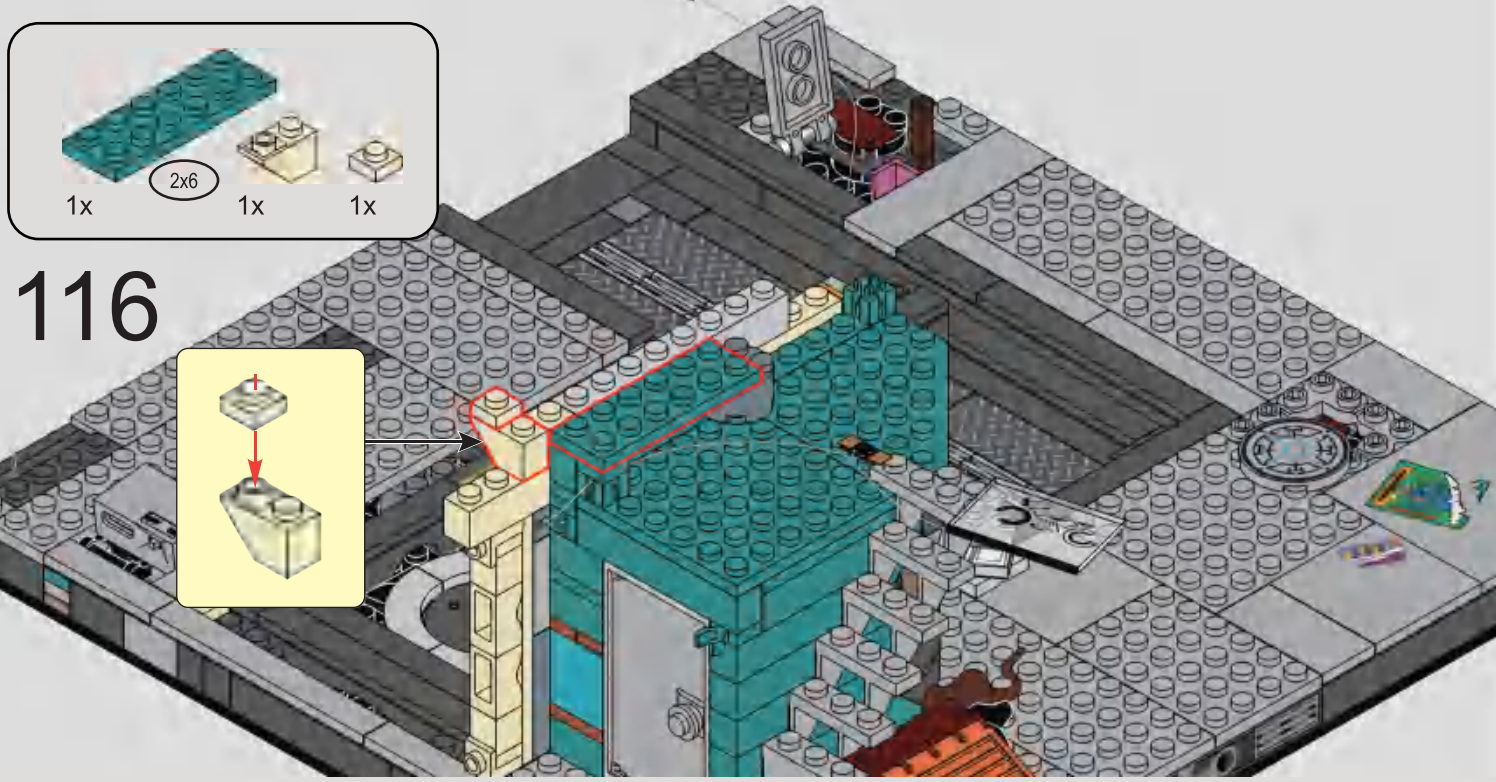

116

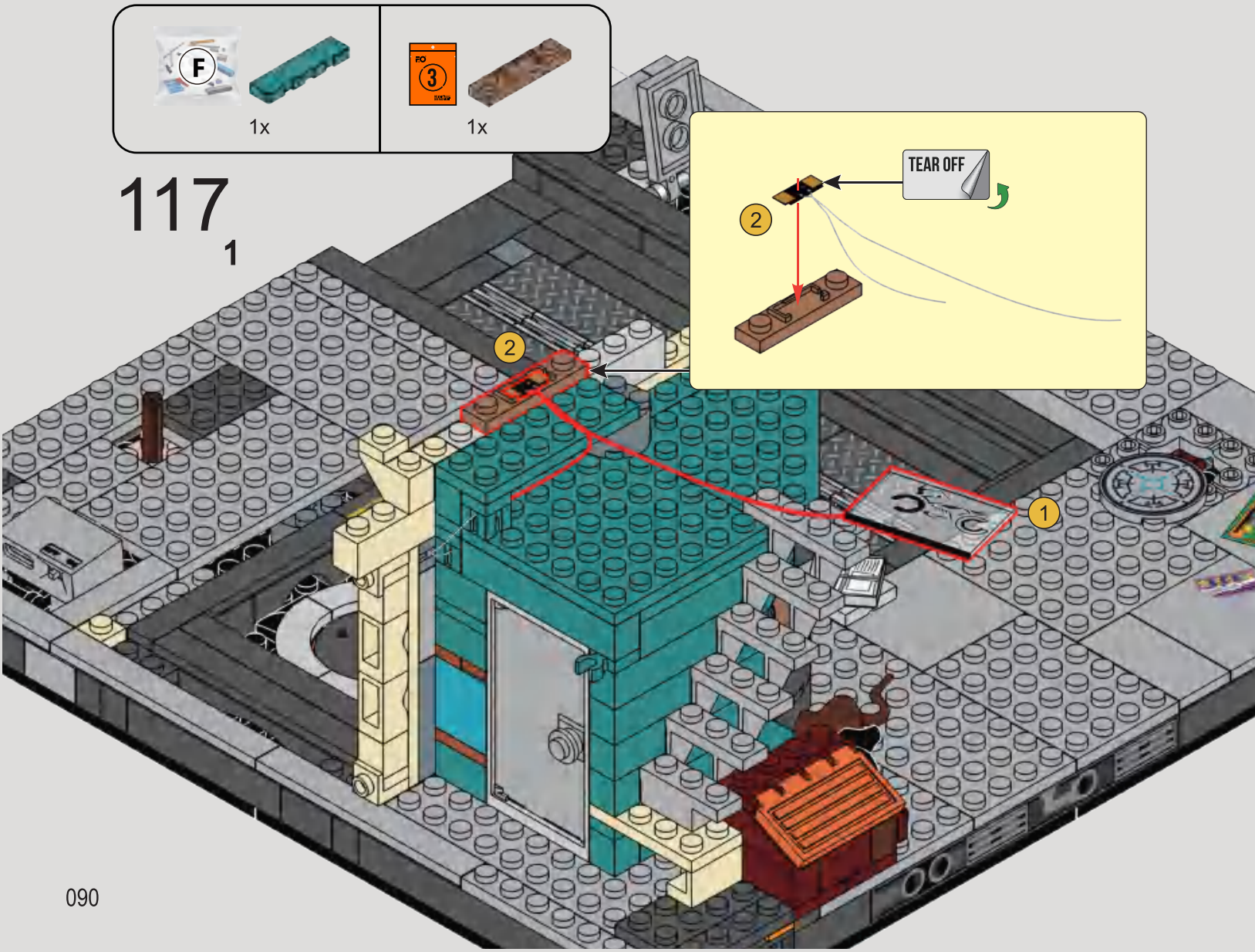

117

1

2

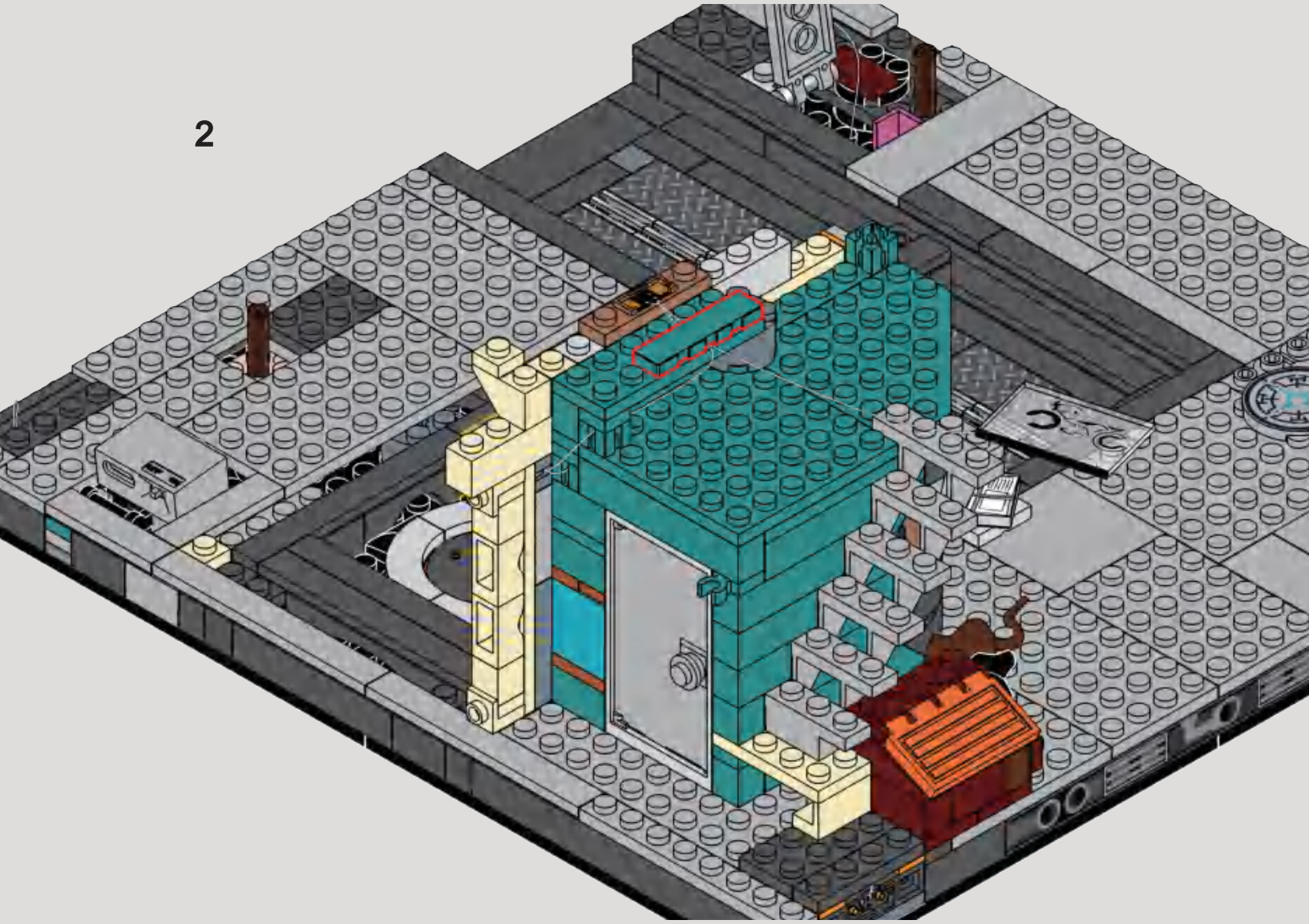

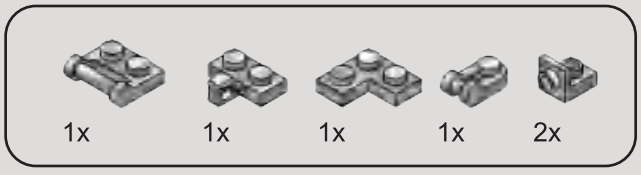

118

1

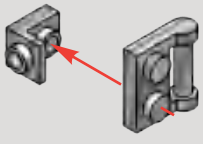

2

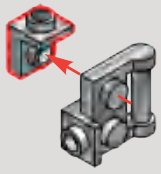

3

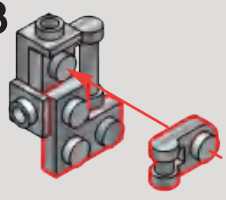

4

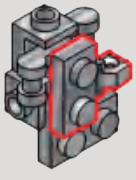

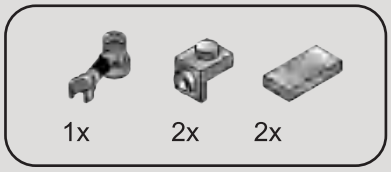

119

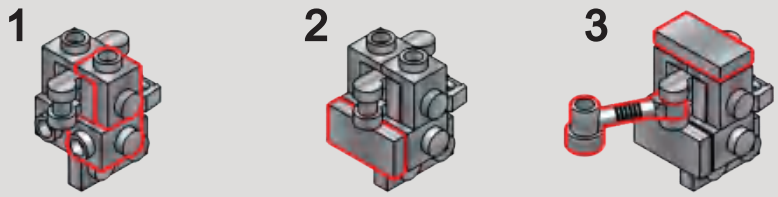

120

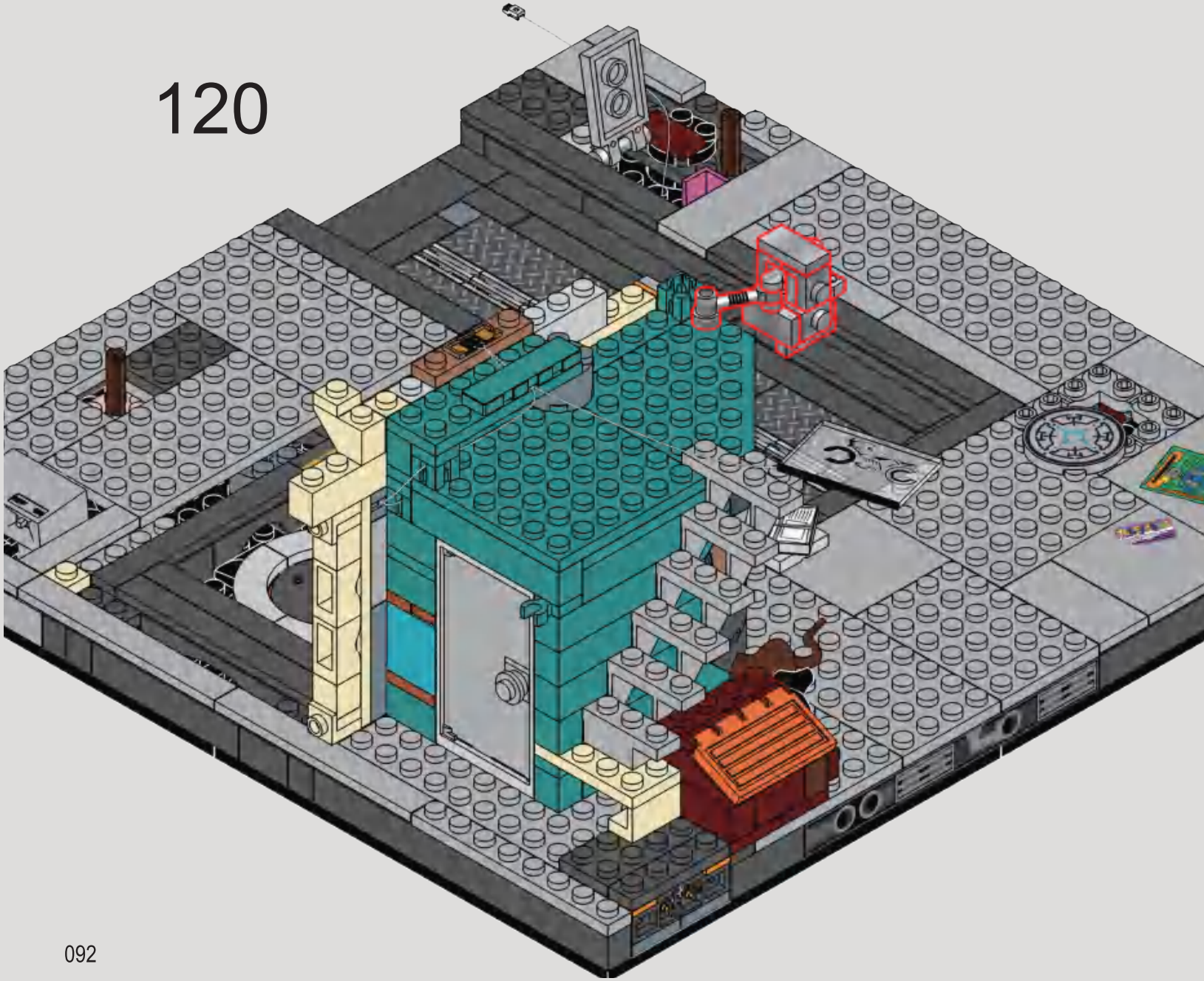

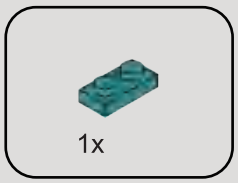

121

1

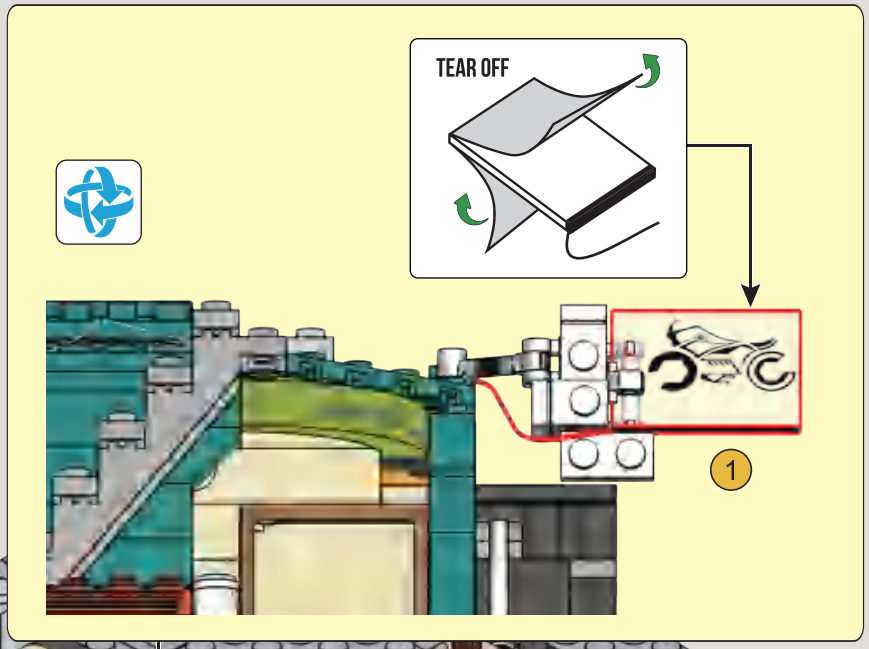

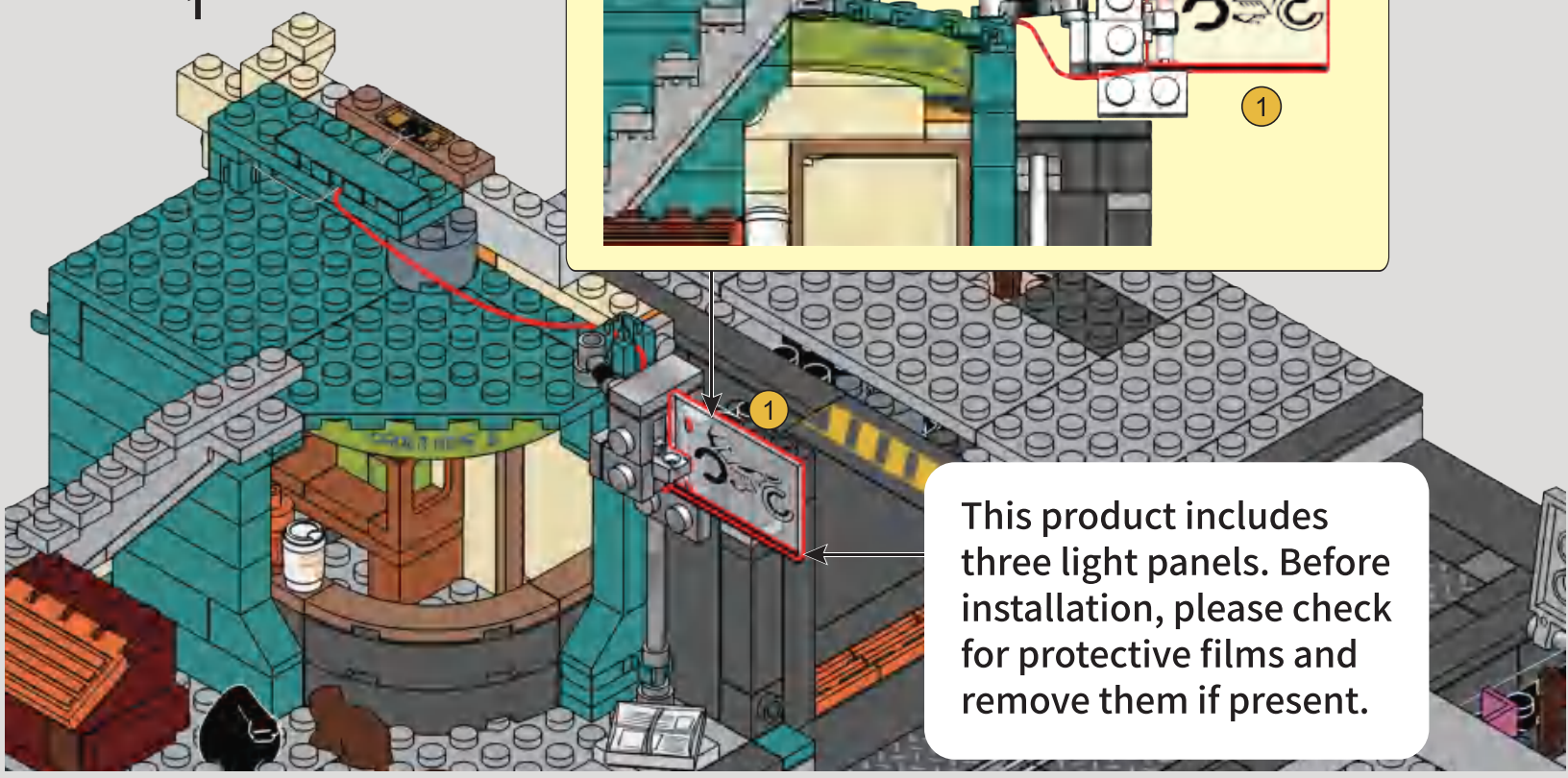

This product includes three light panels. Before installation, please check for protective films and remove them if present.

2

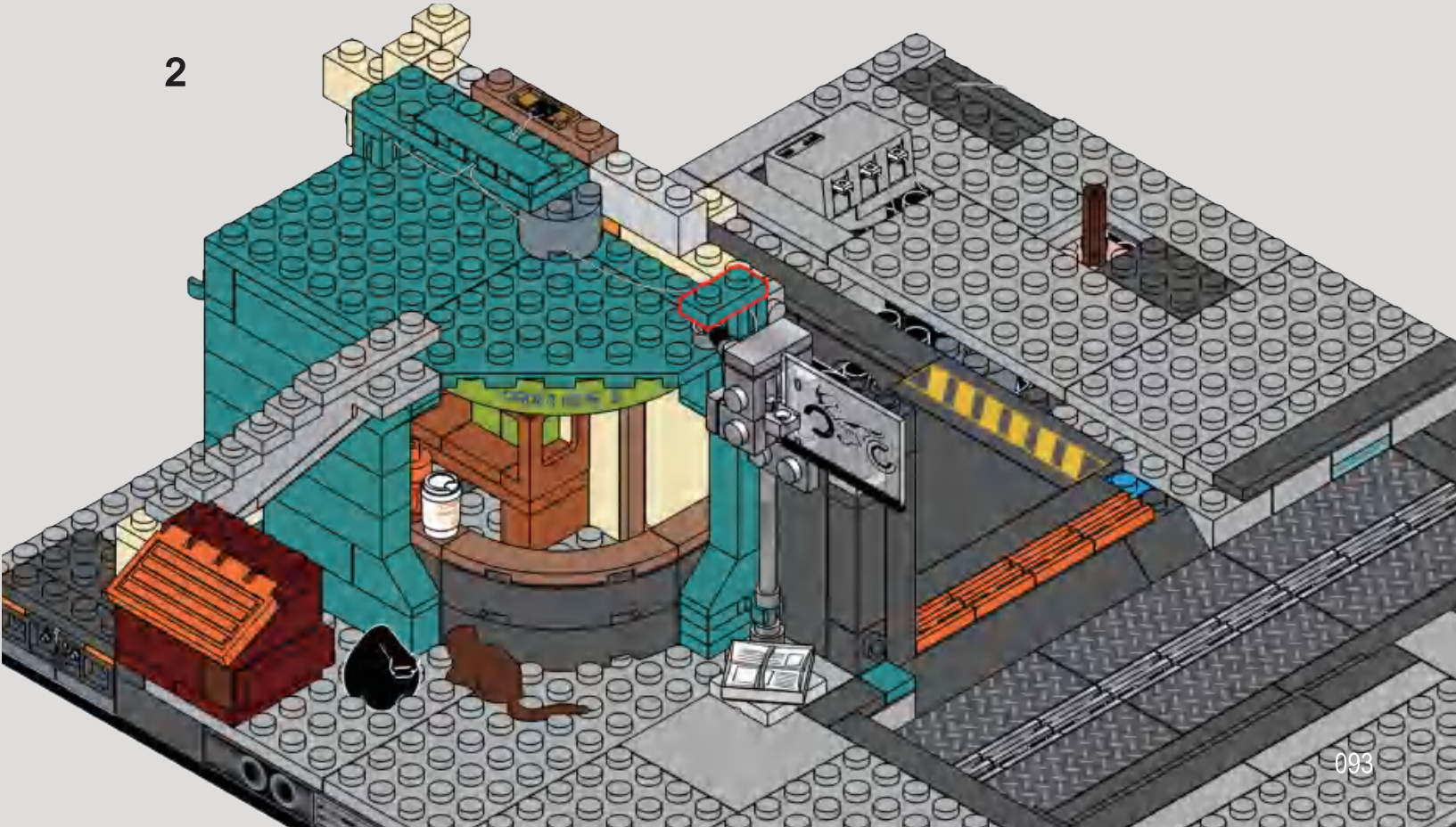

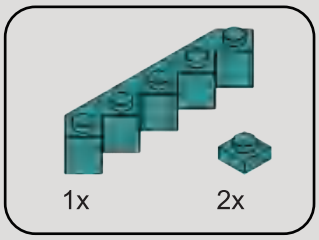

122

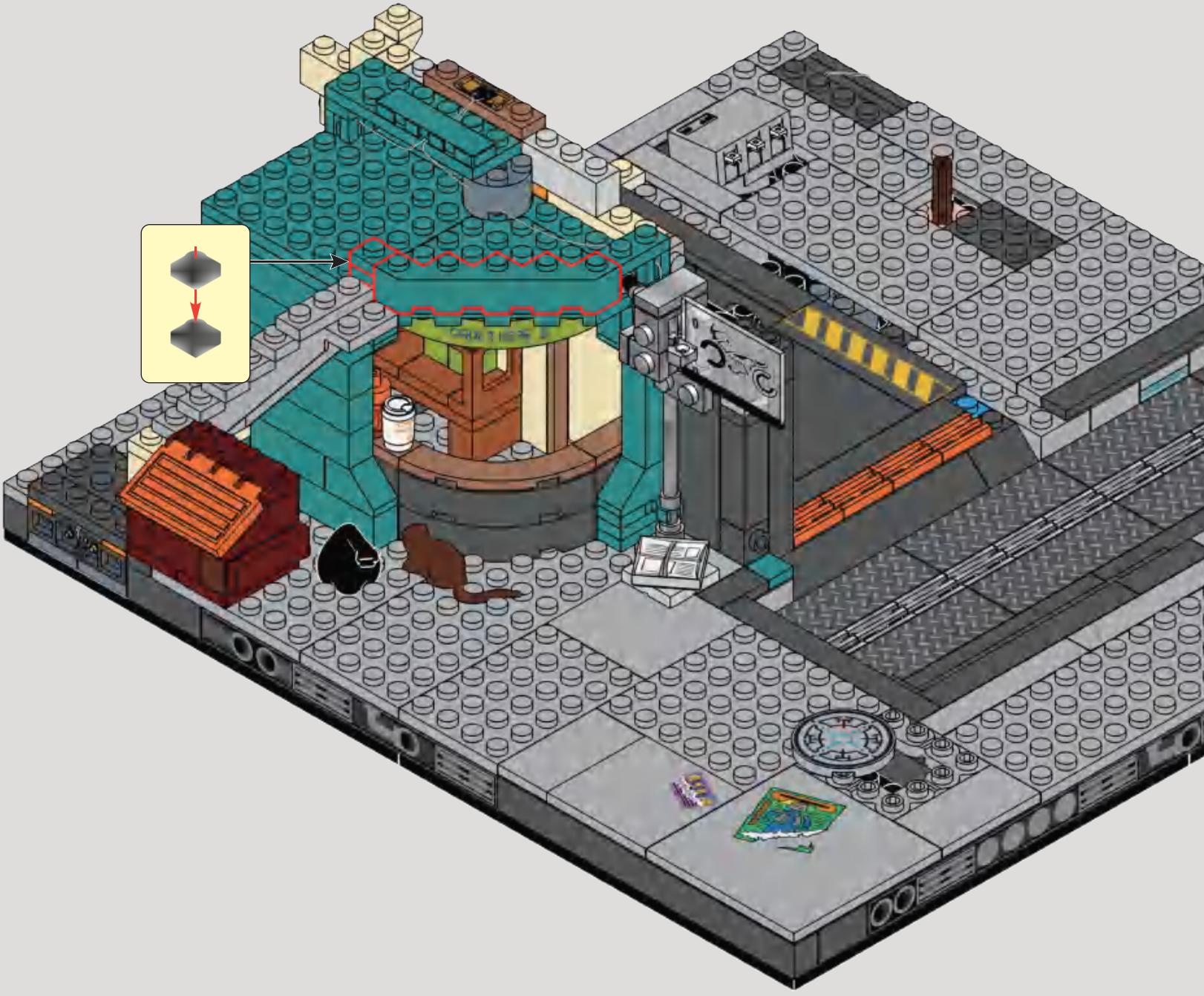

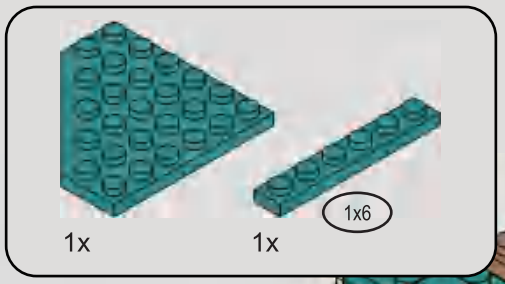

123

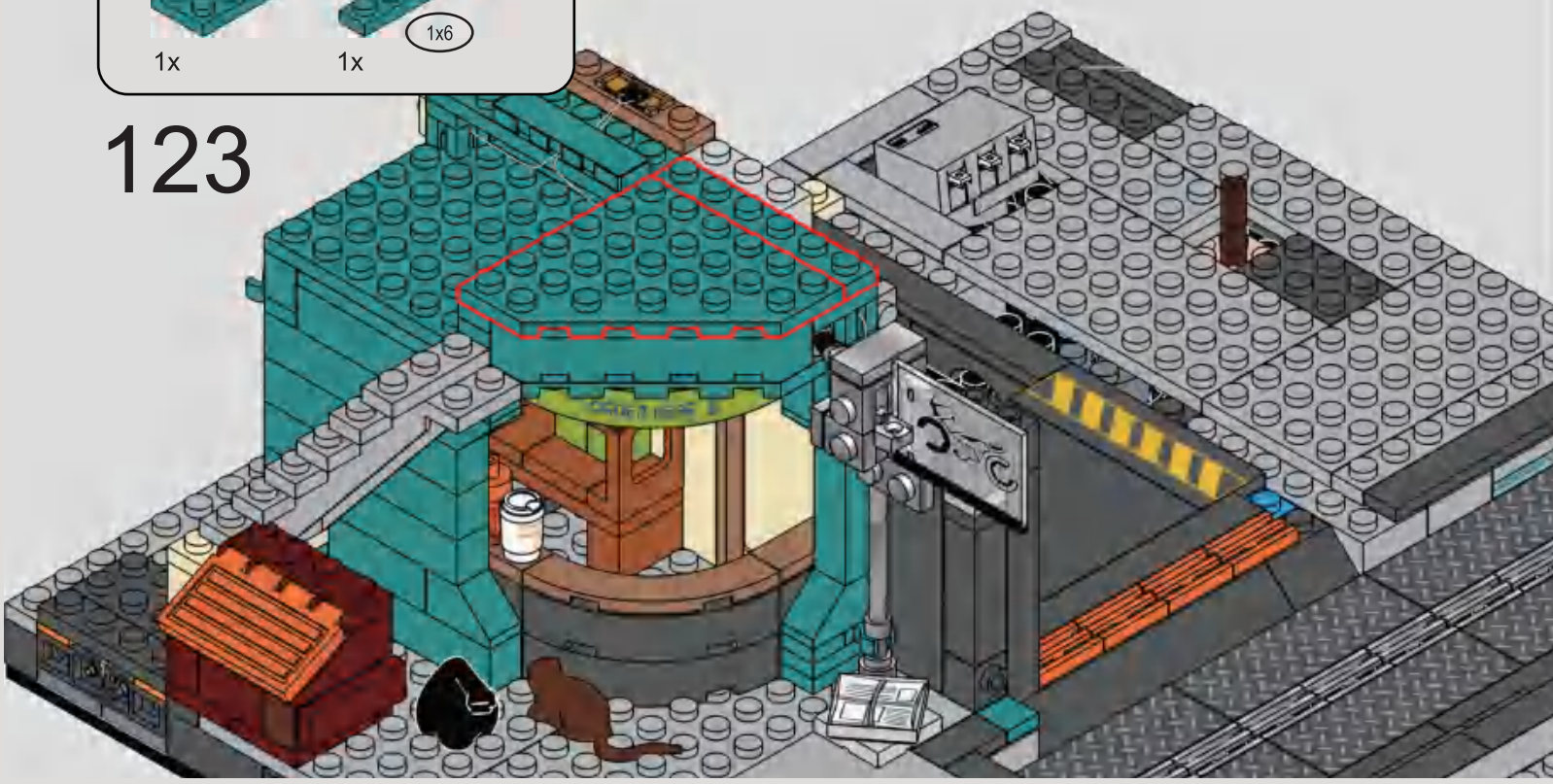

124

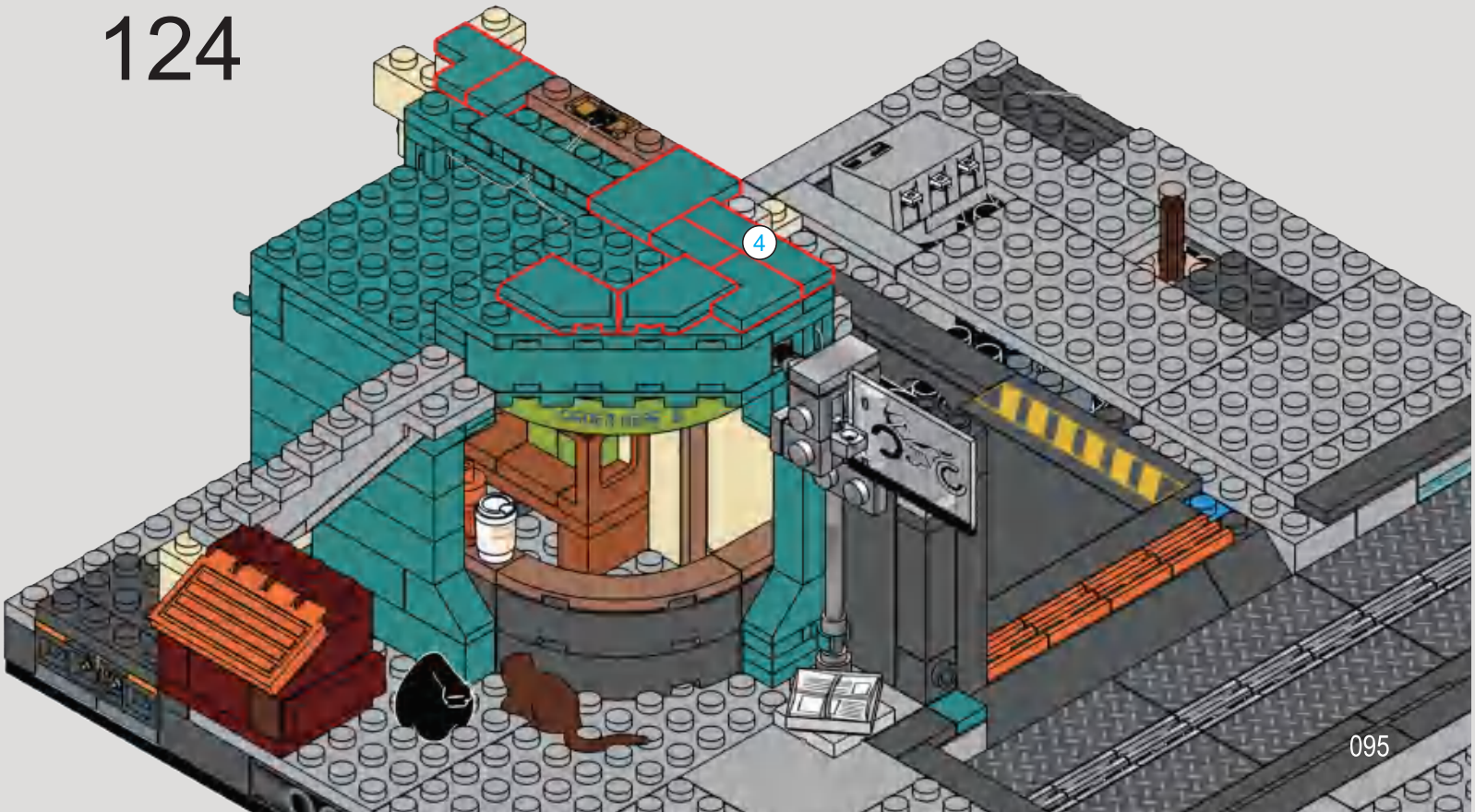

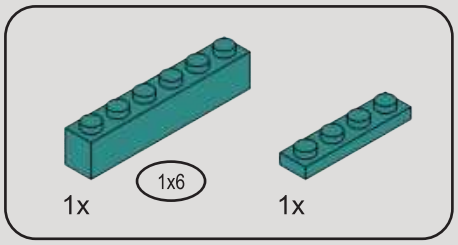

125

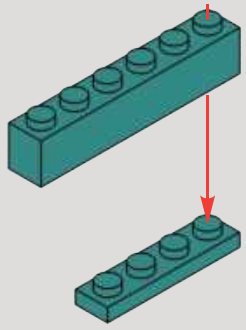

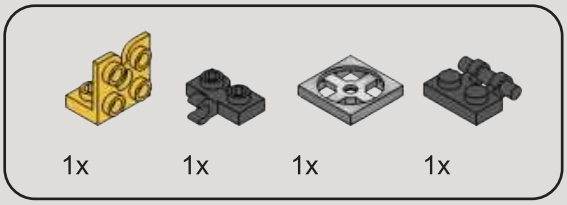

126

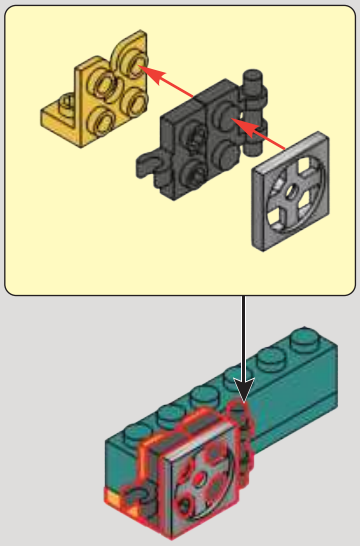

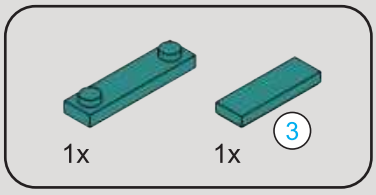

127

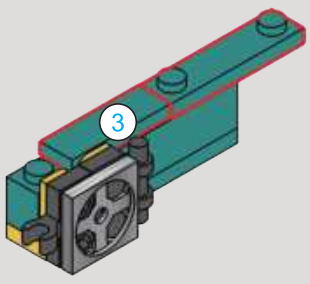

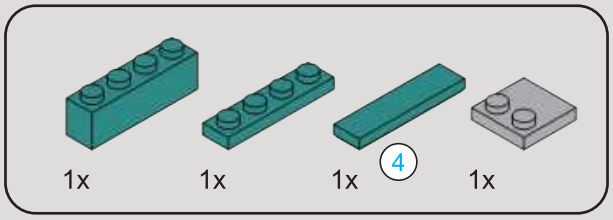

128

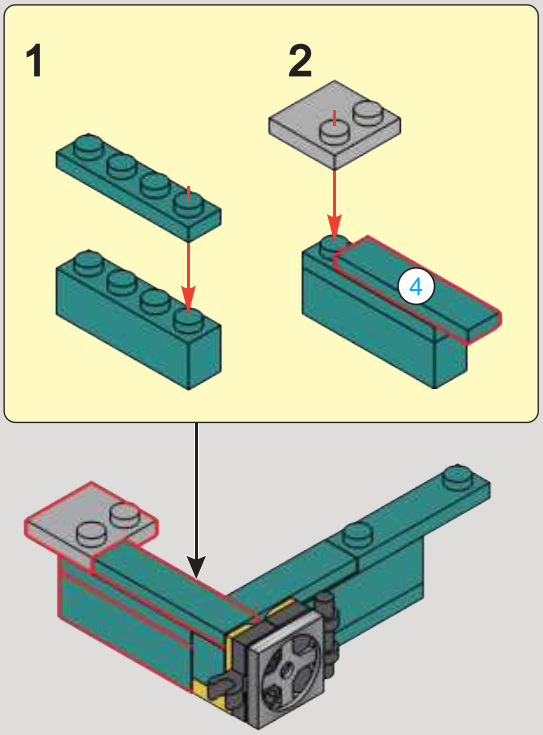

129

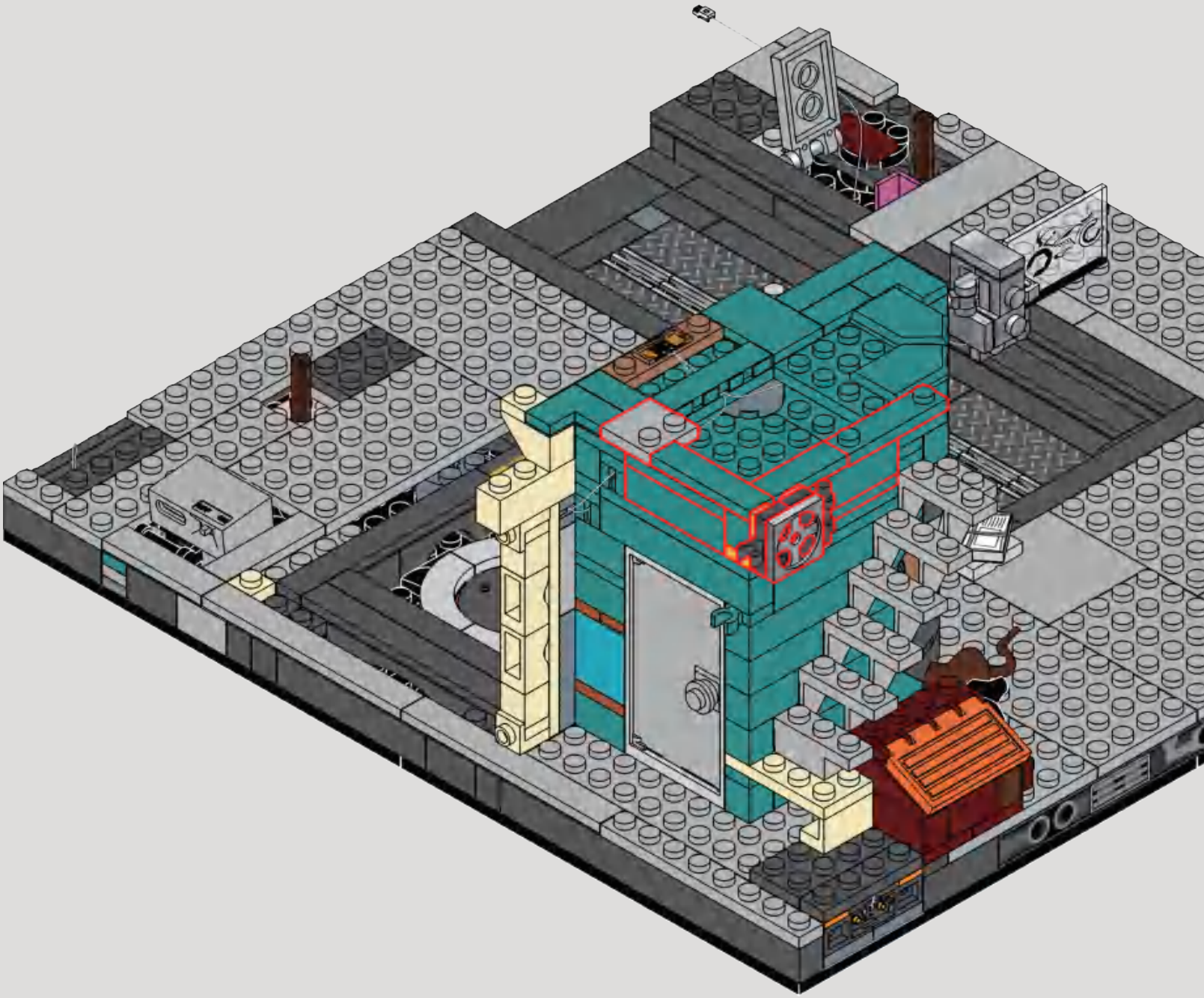

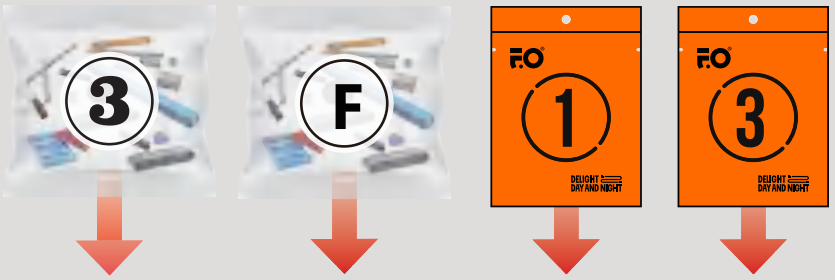
3
F
1
3
DELIGHT DAY AND NIGHT
DELIGHT DAY AND NIGHT

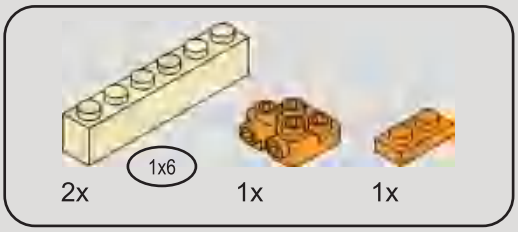

130

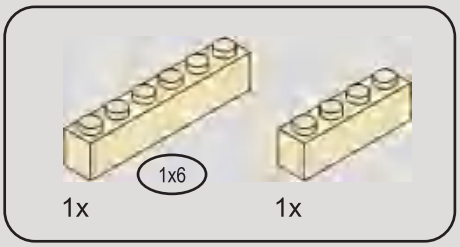

131

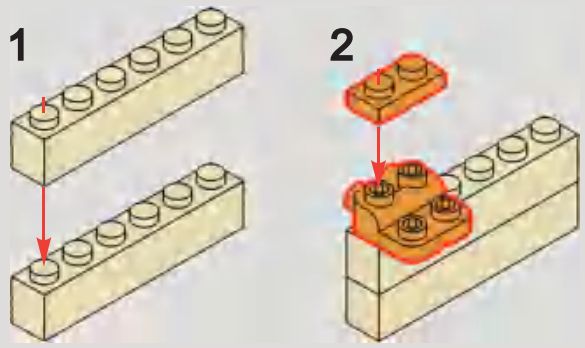

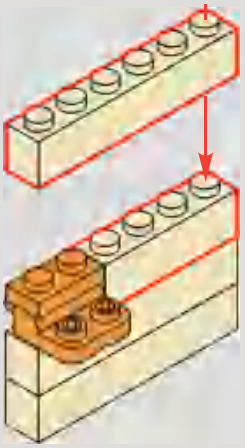

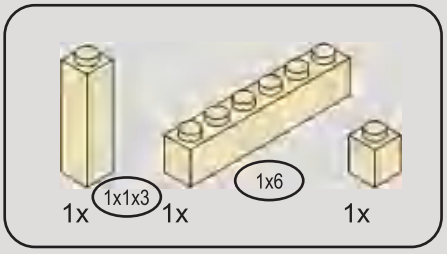

132

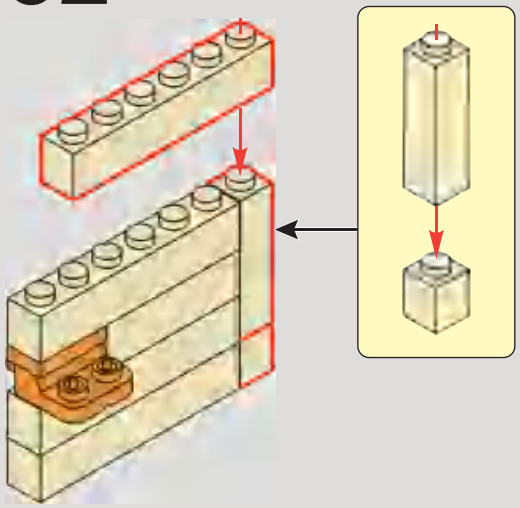

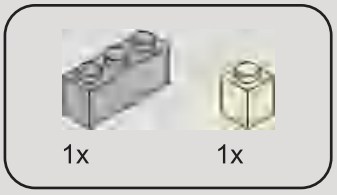

133

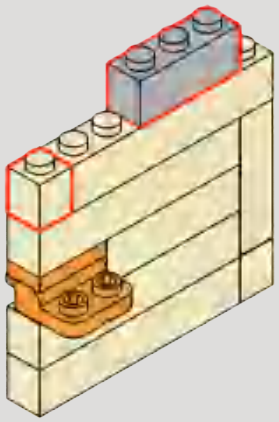

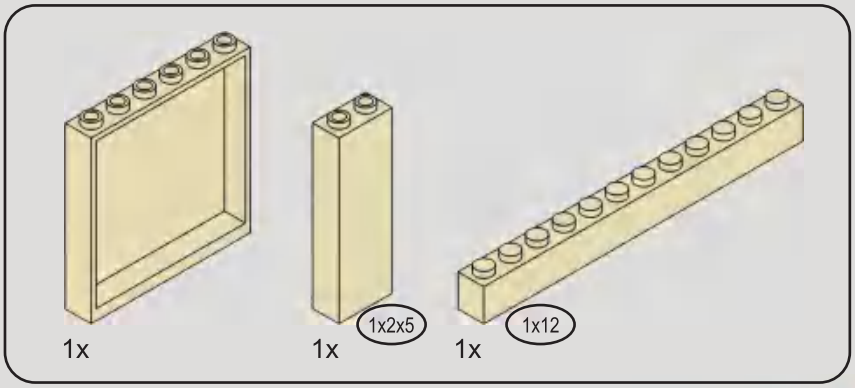

134

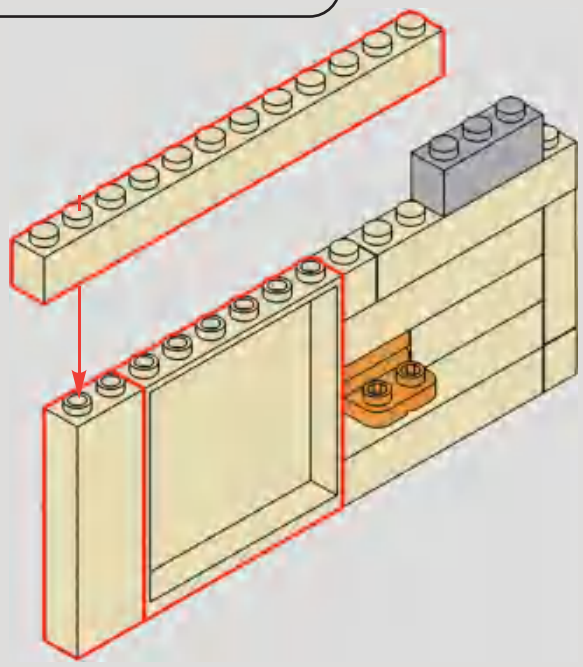

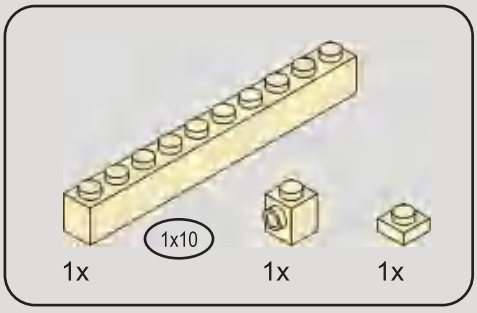

135

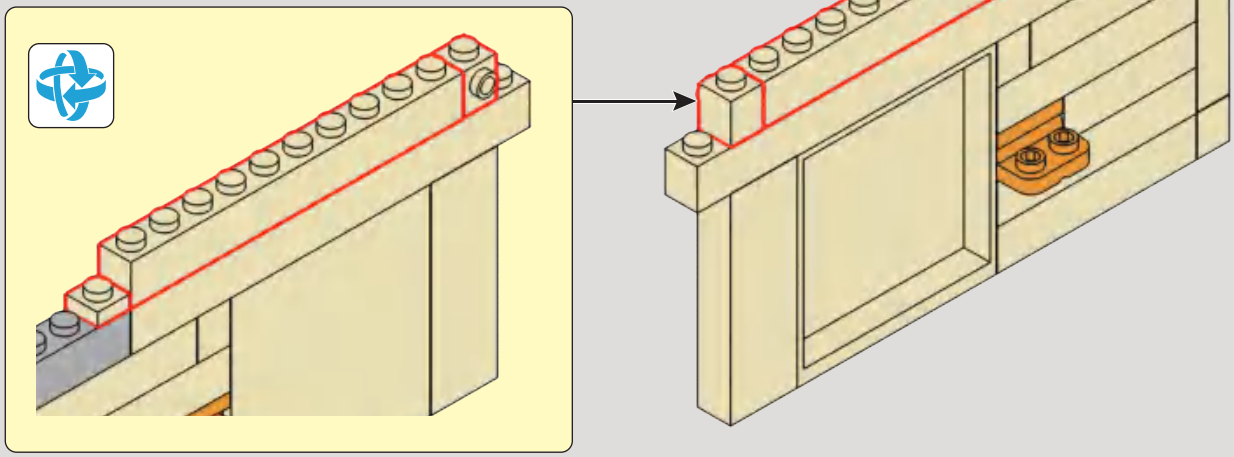

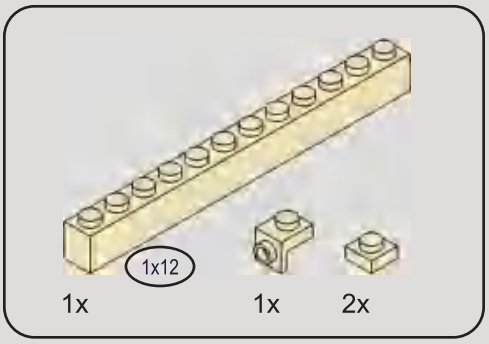

136

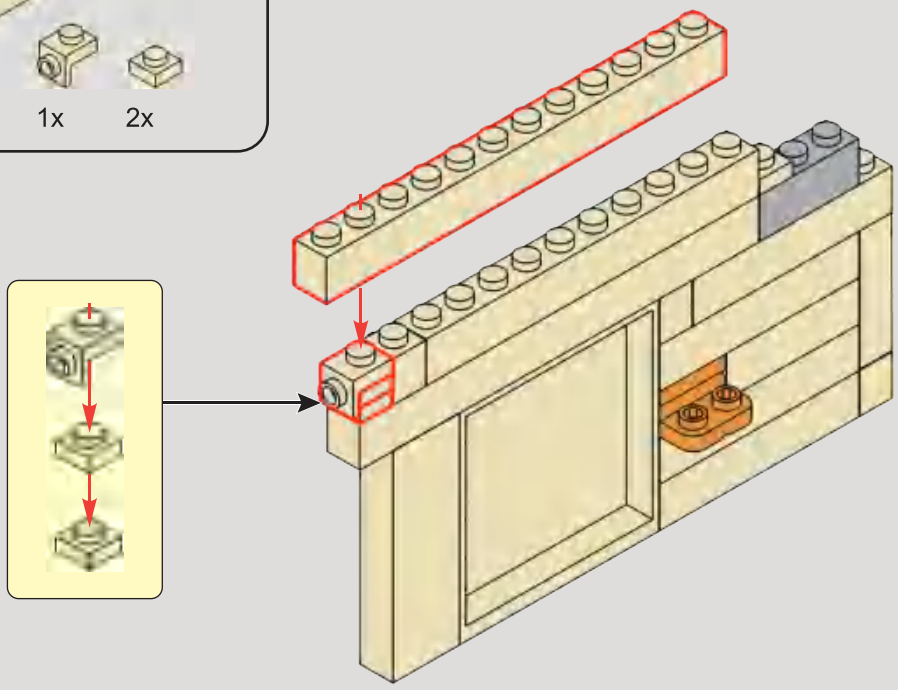

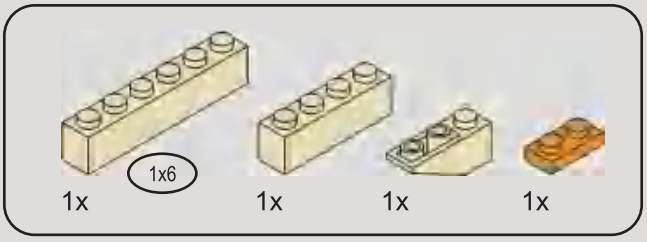

137

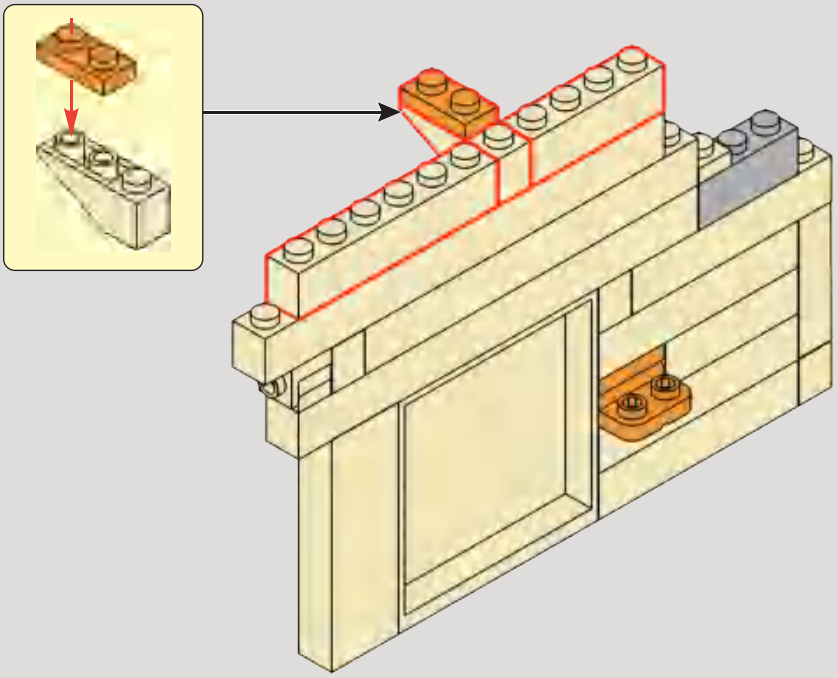

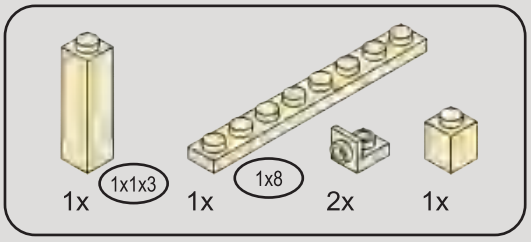

138

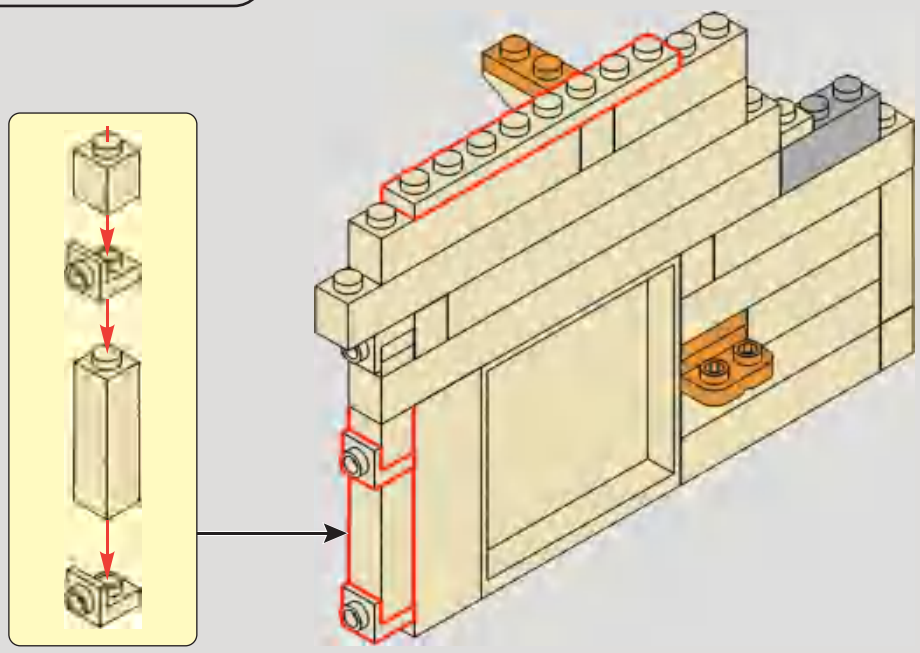

139

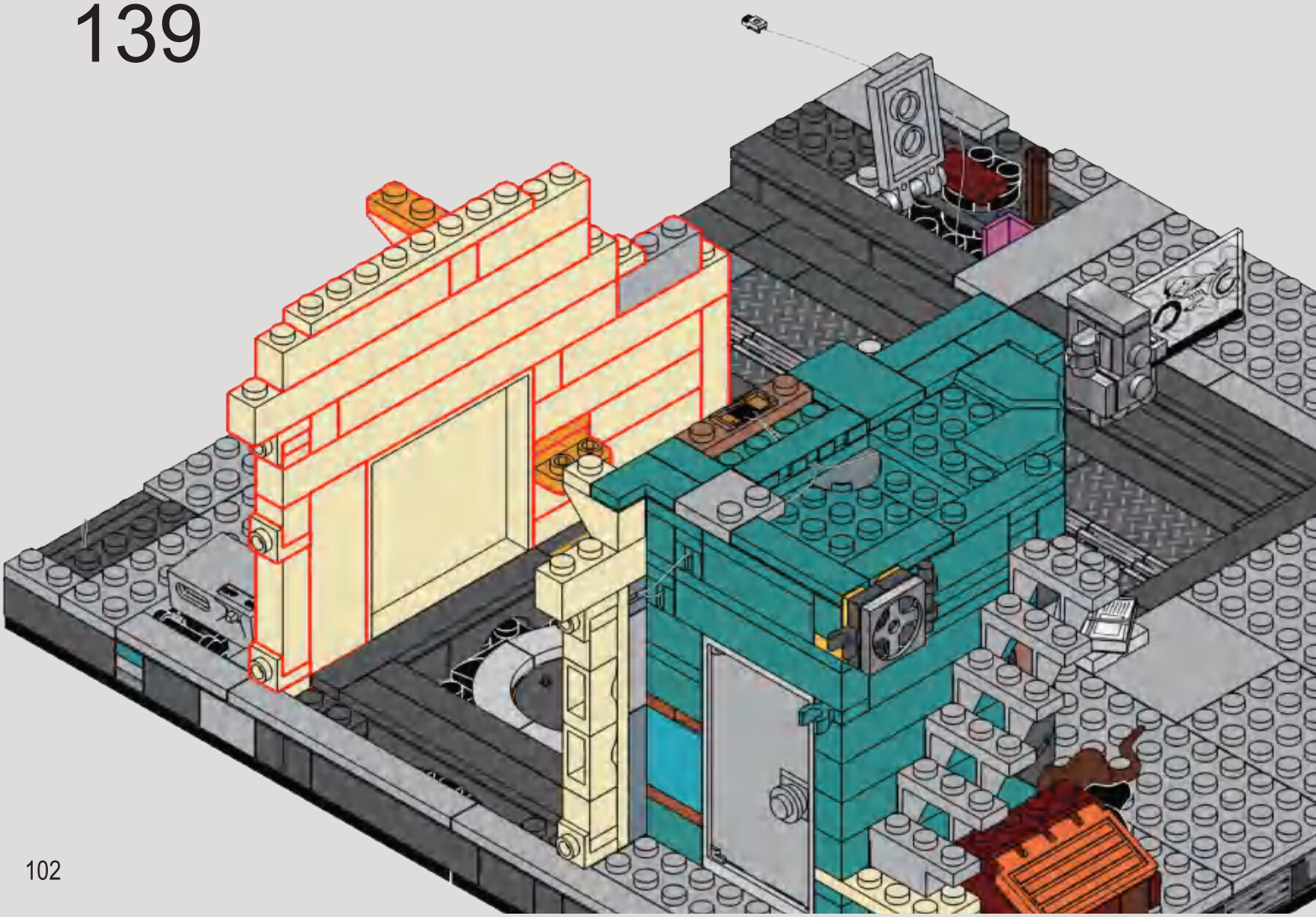

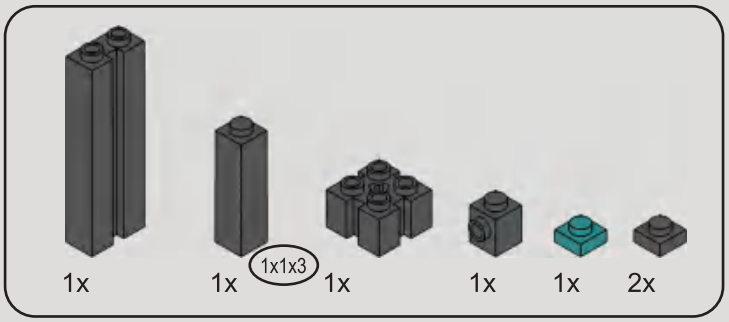

140

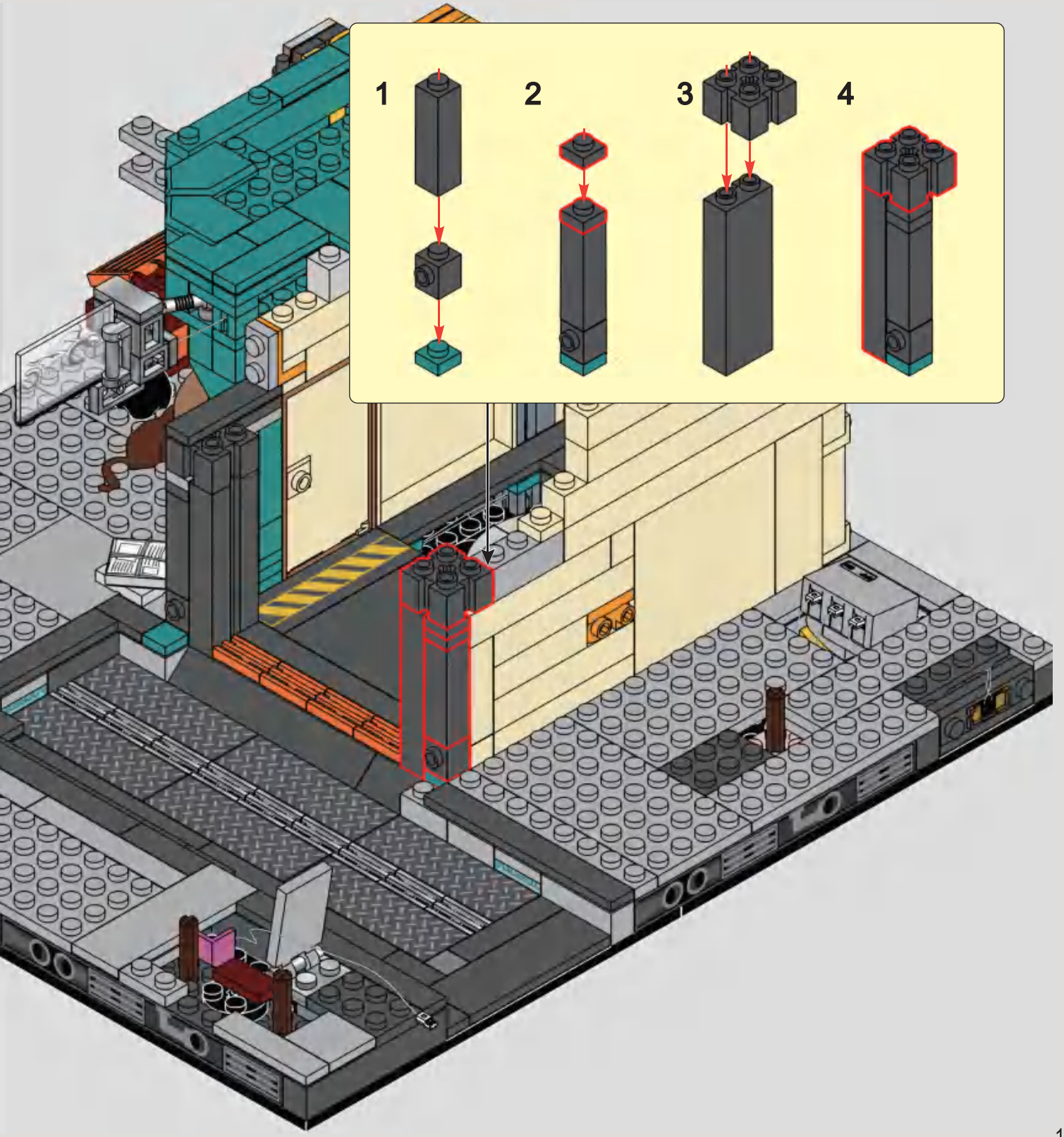

141

142

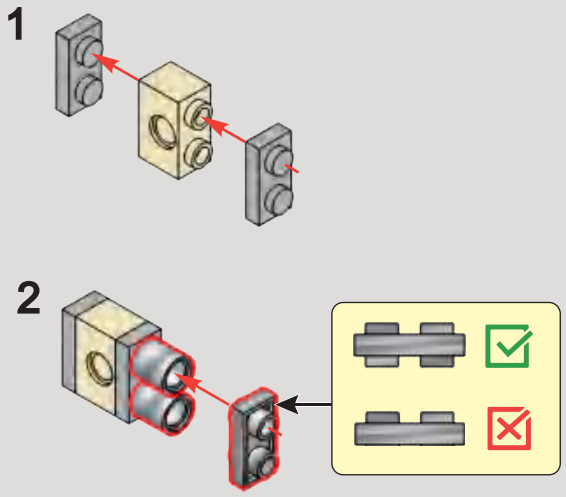

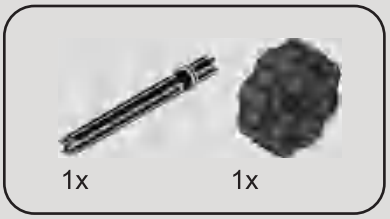

143

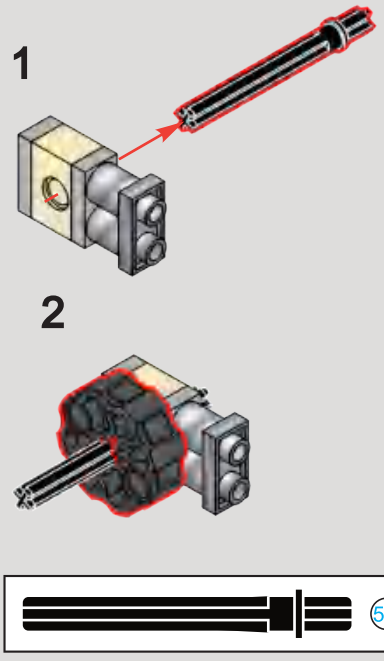

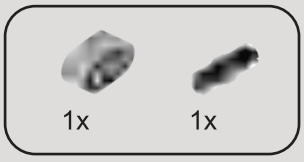

144

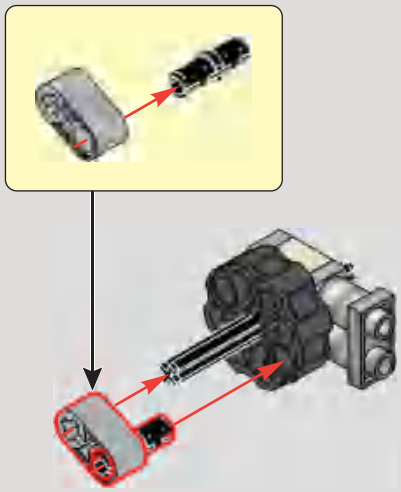

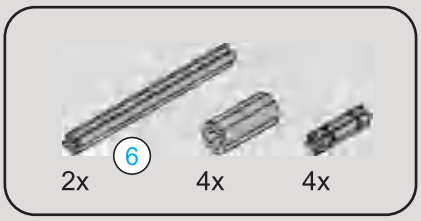

145

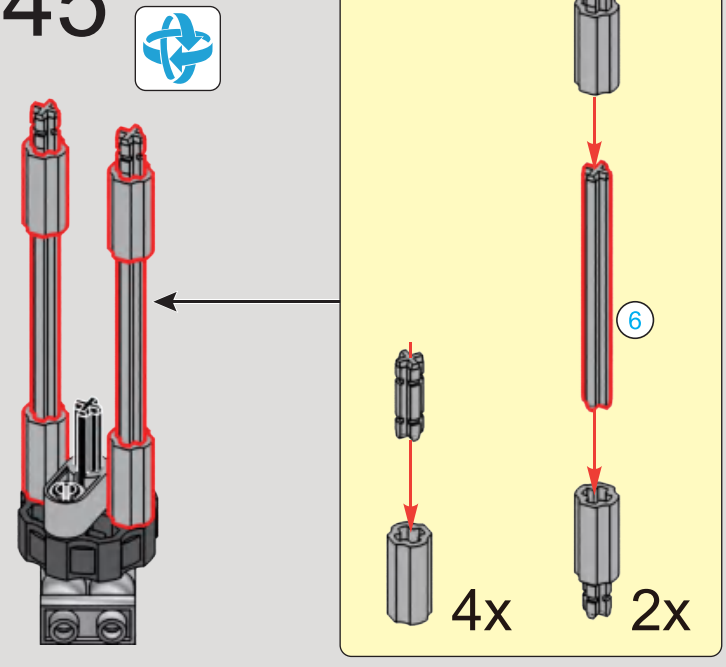

146

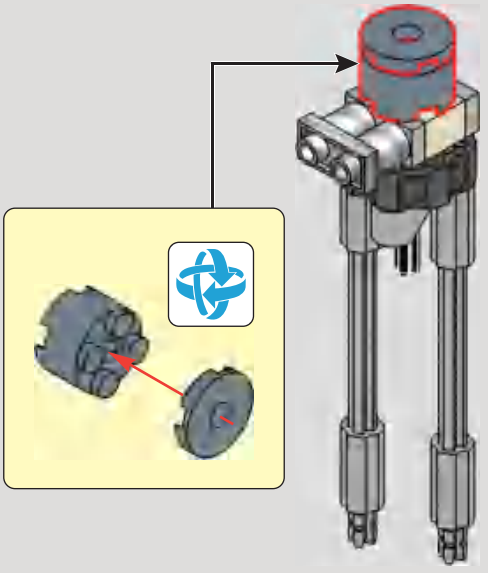

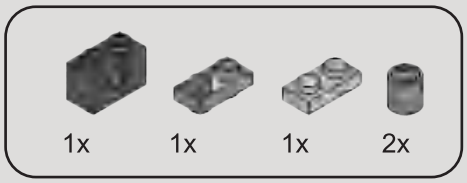

147

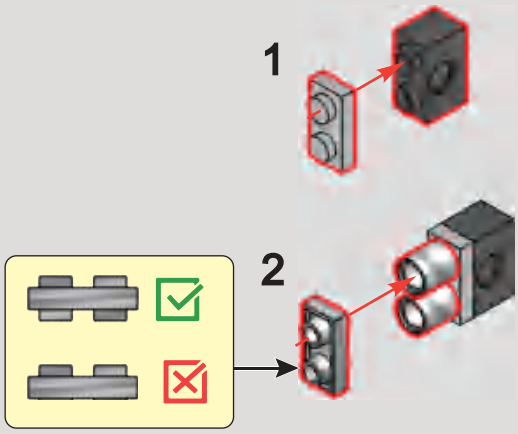

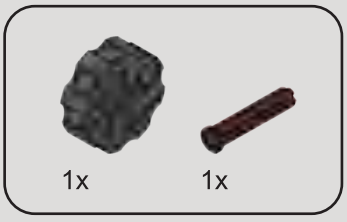

148

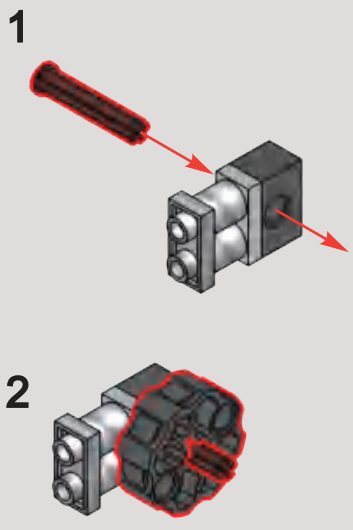

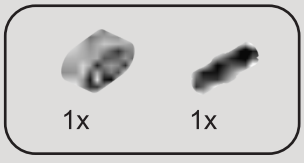

149

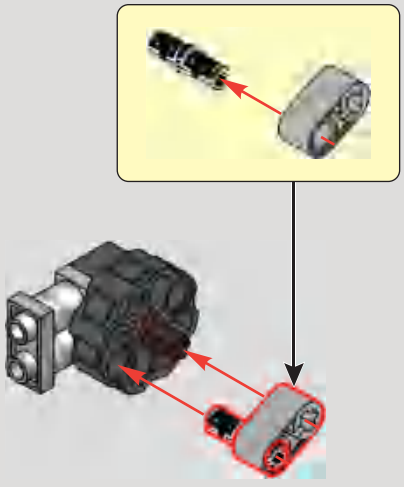

150

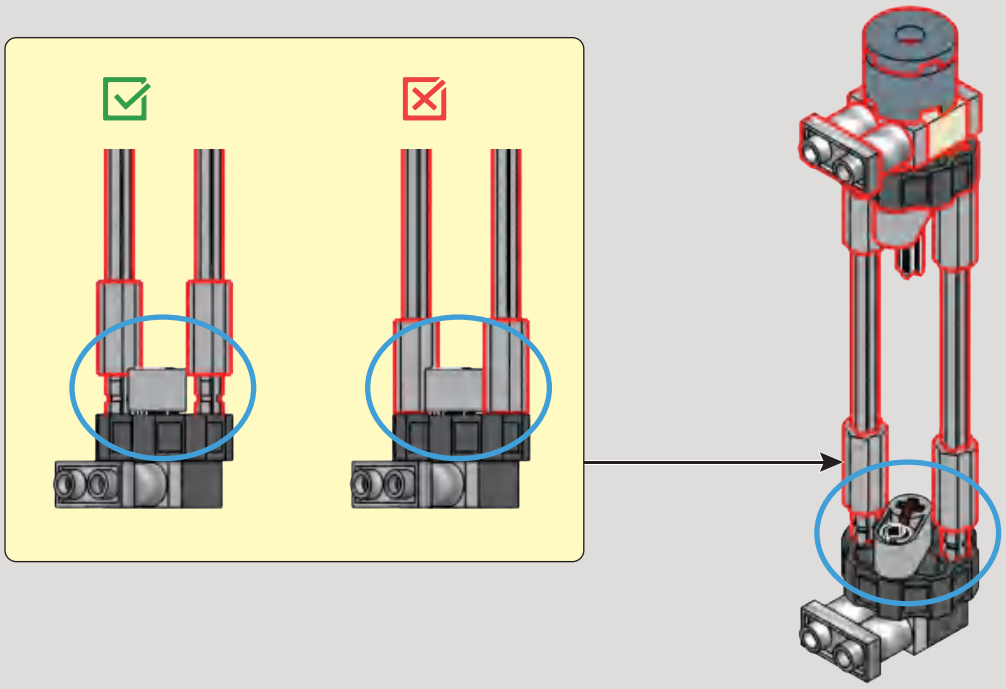

1x

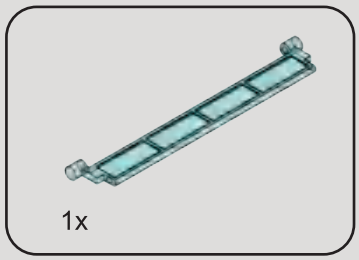

151

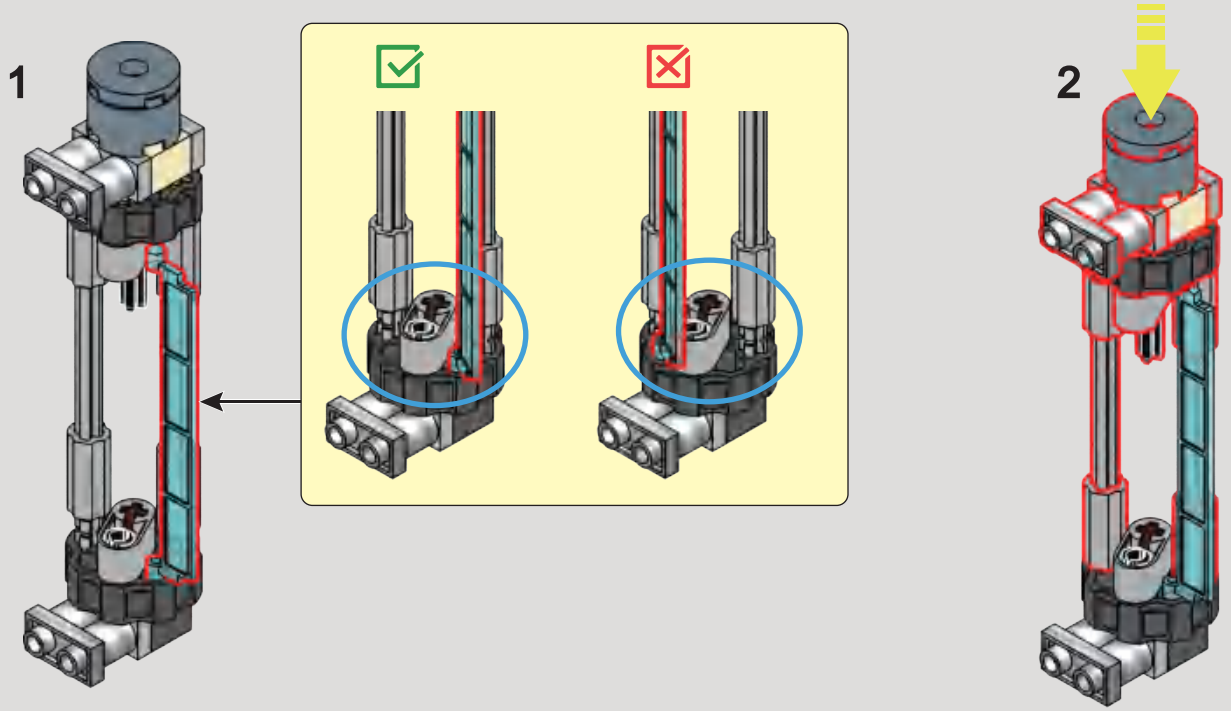

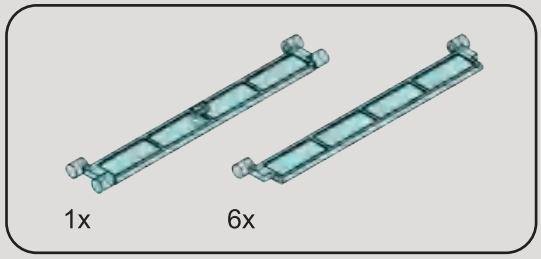

152

1

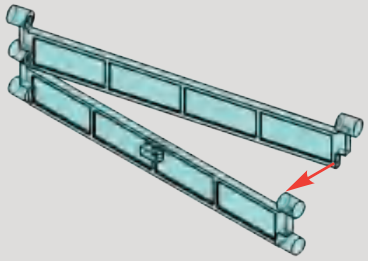

2

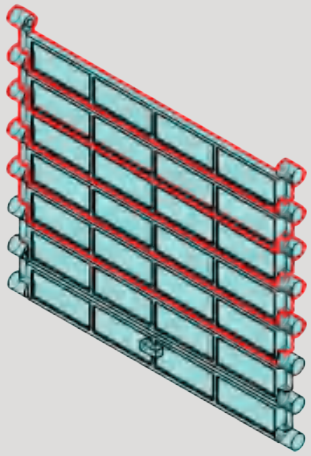

3

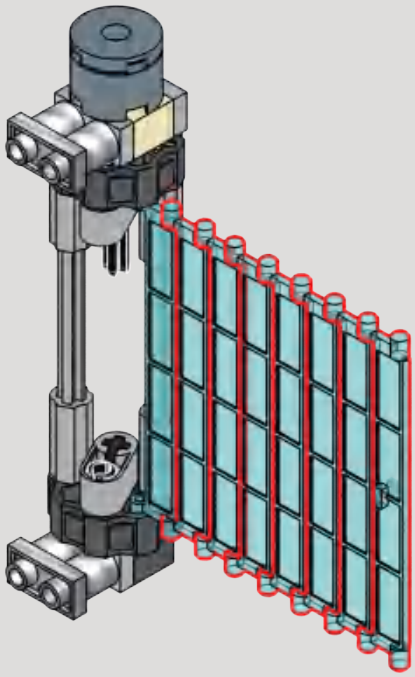

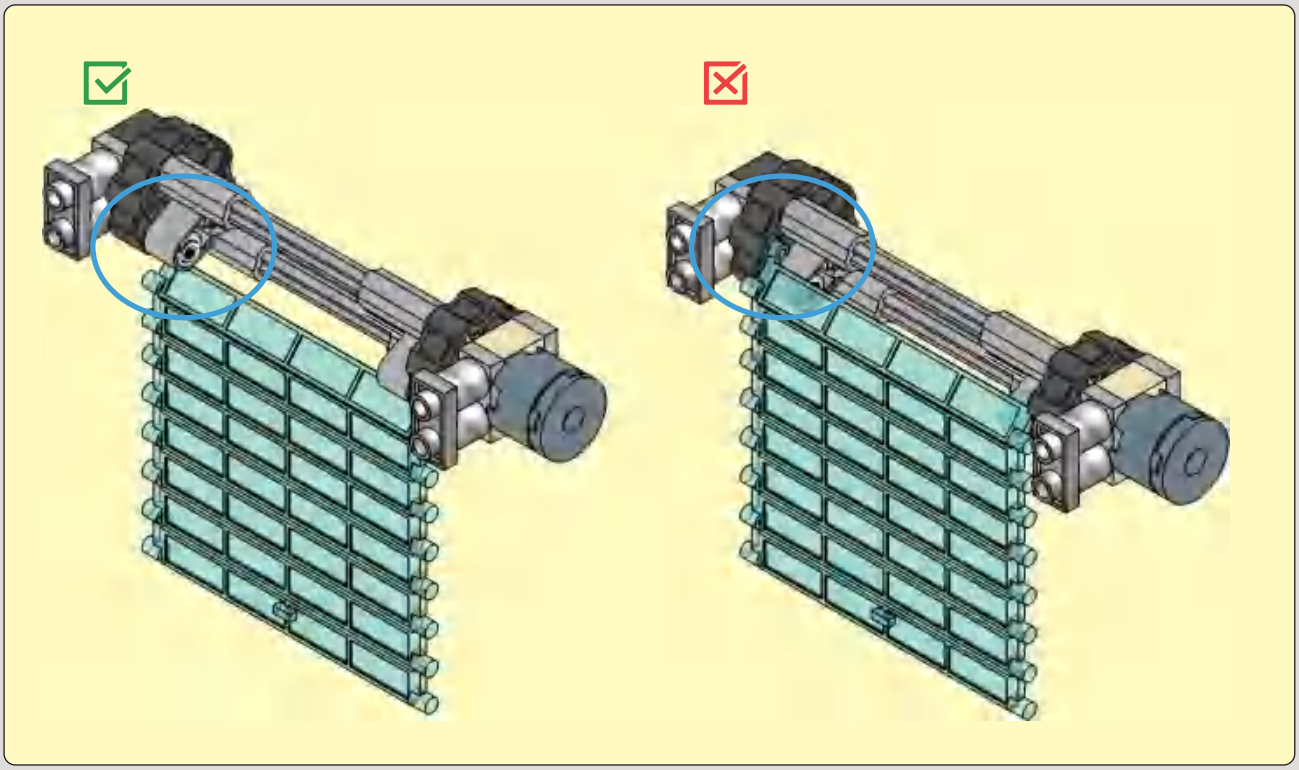

153 1

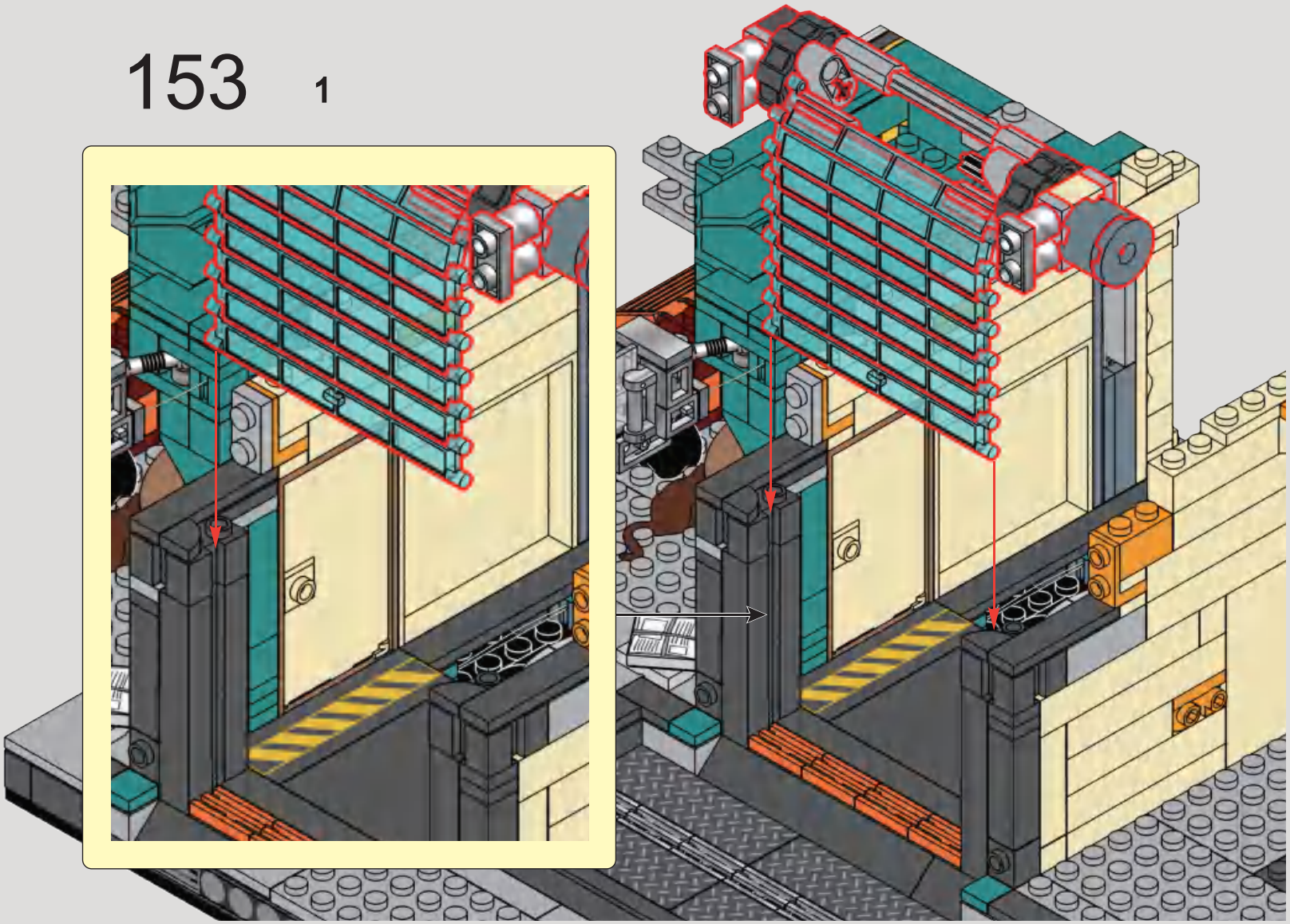

2

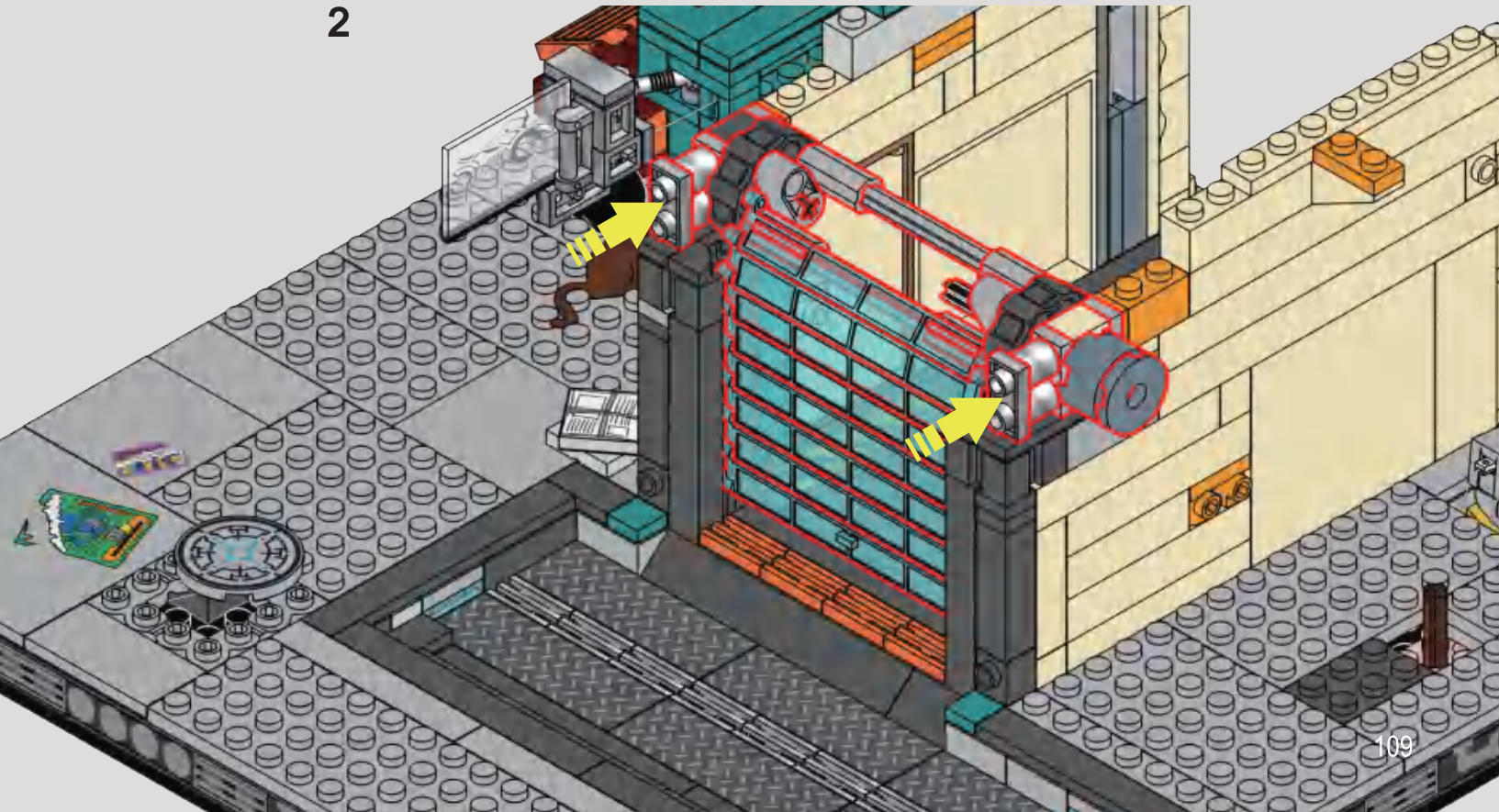

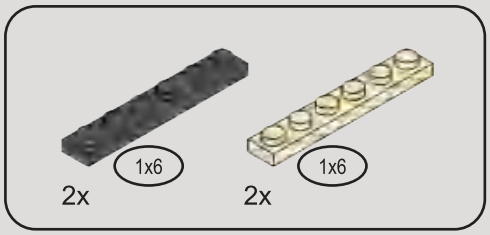

154

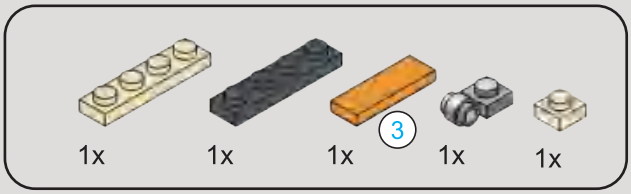

155

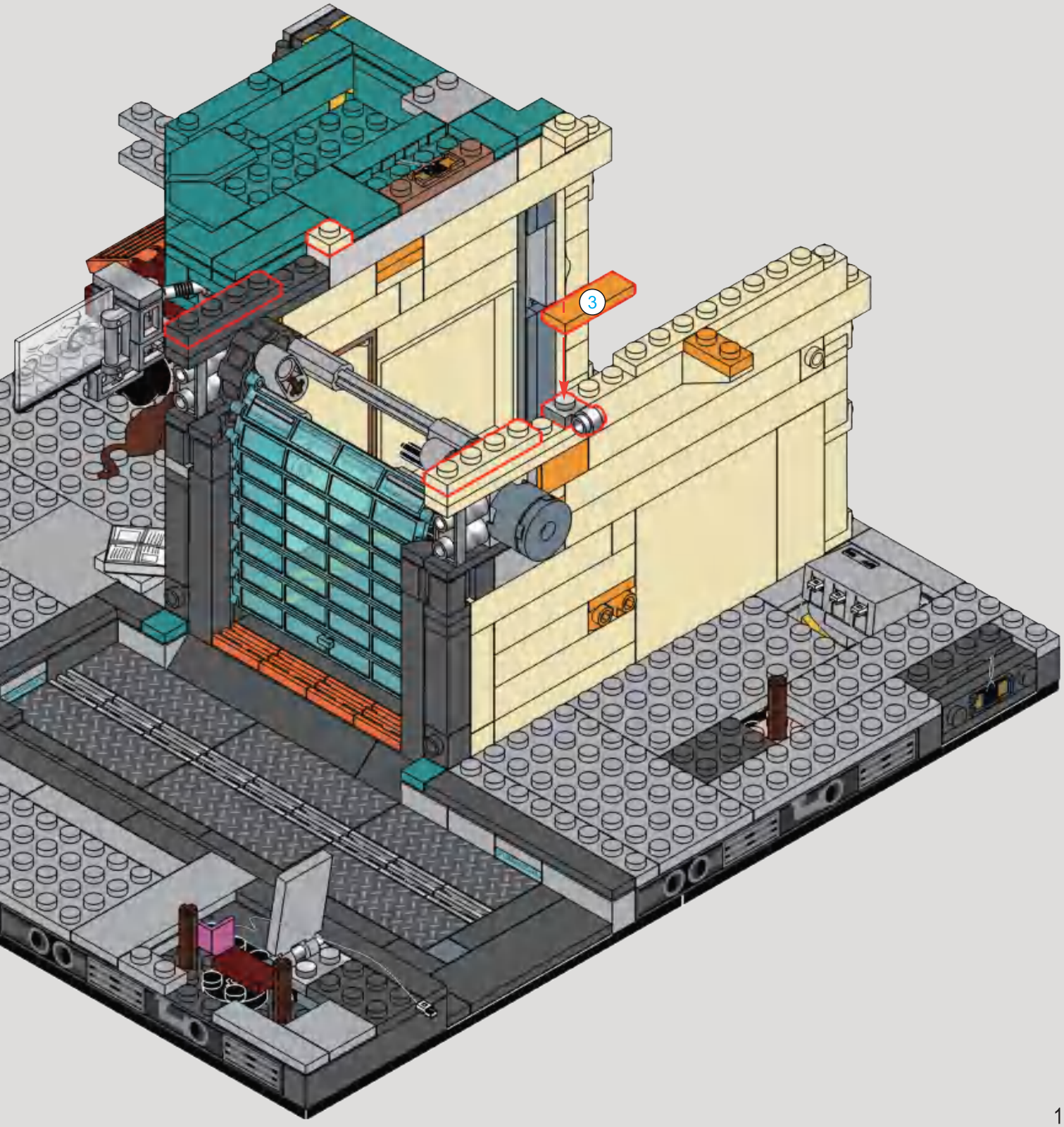

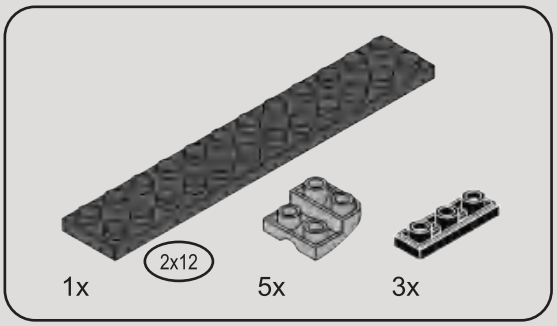

156

157

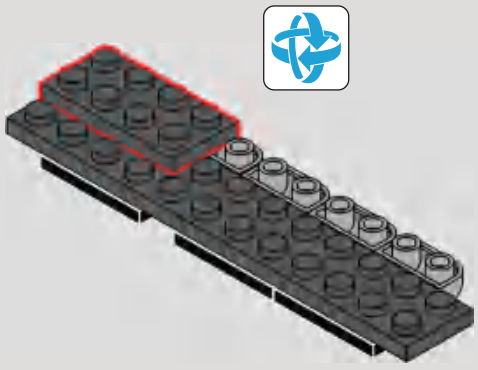

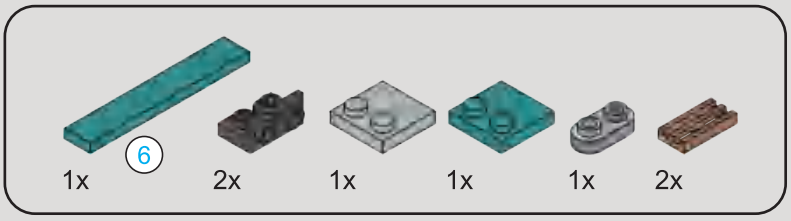

158

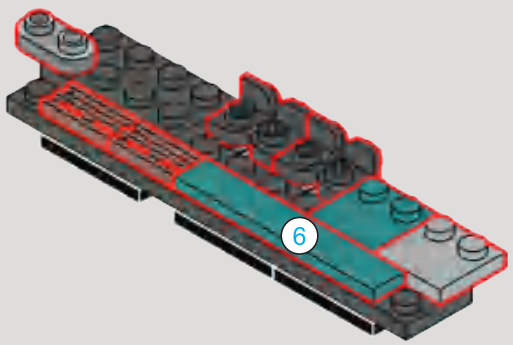

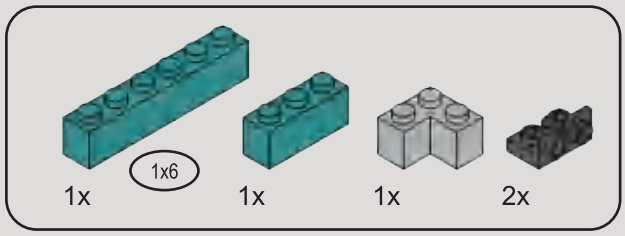

159

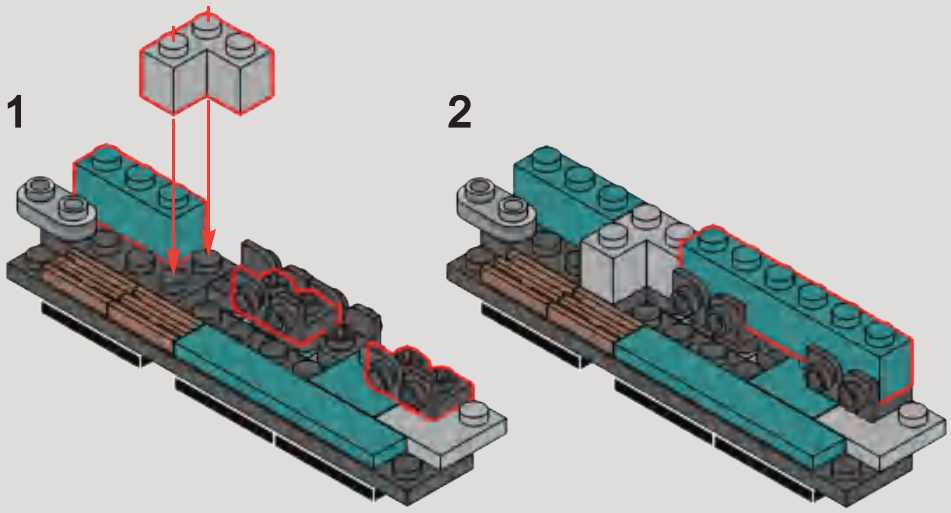

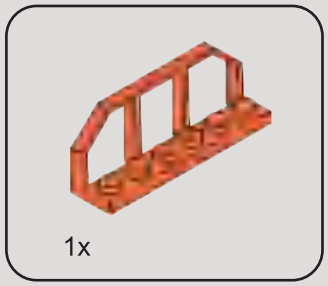

160

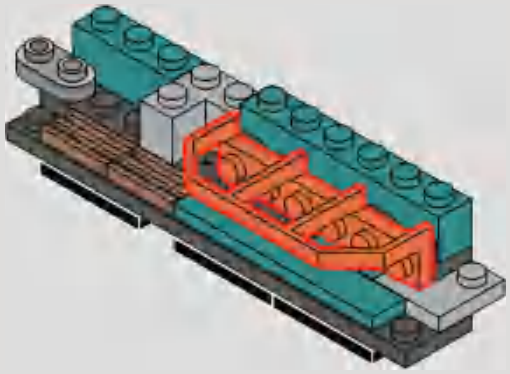

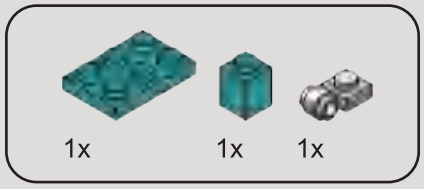

161

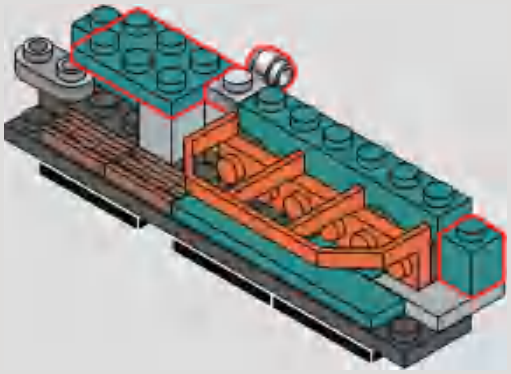

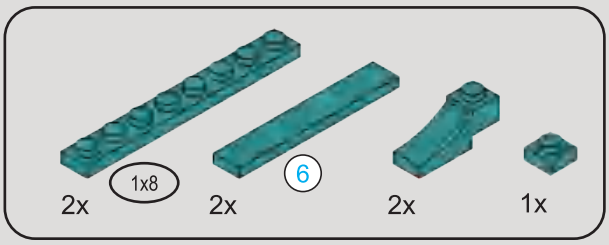

162

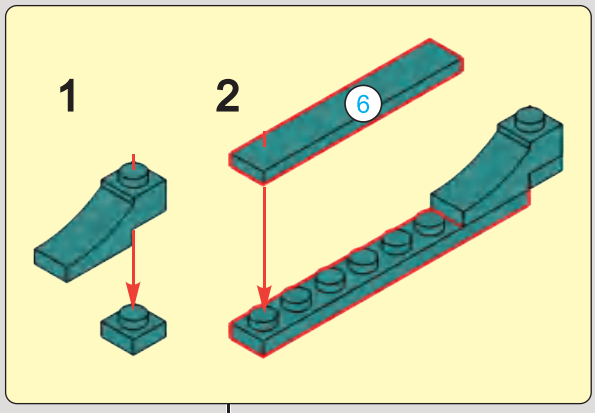

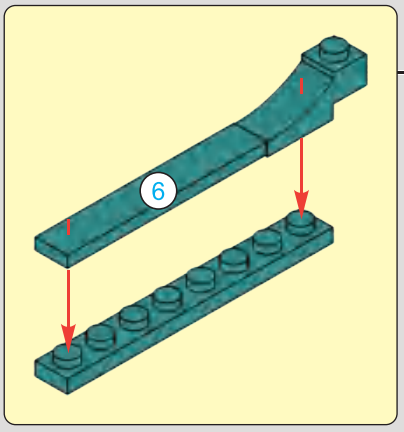

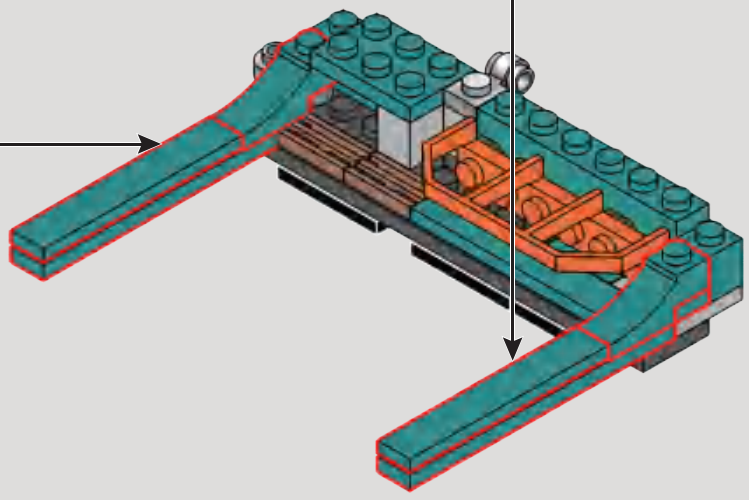

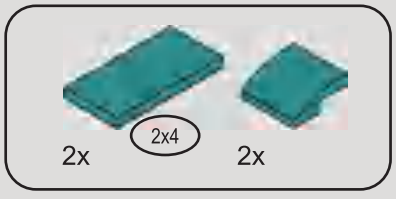

163

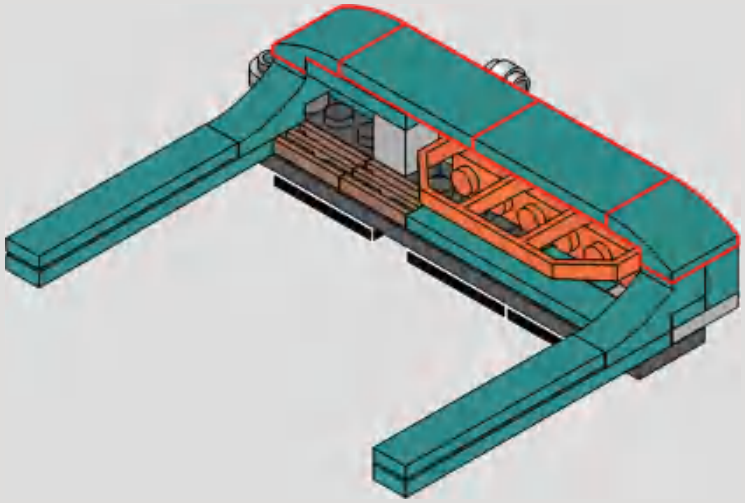

164

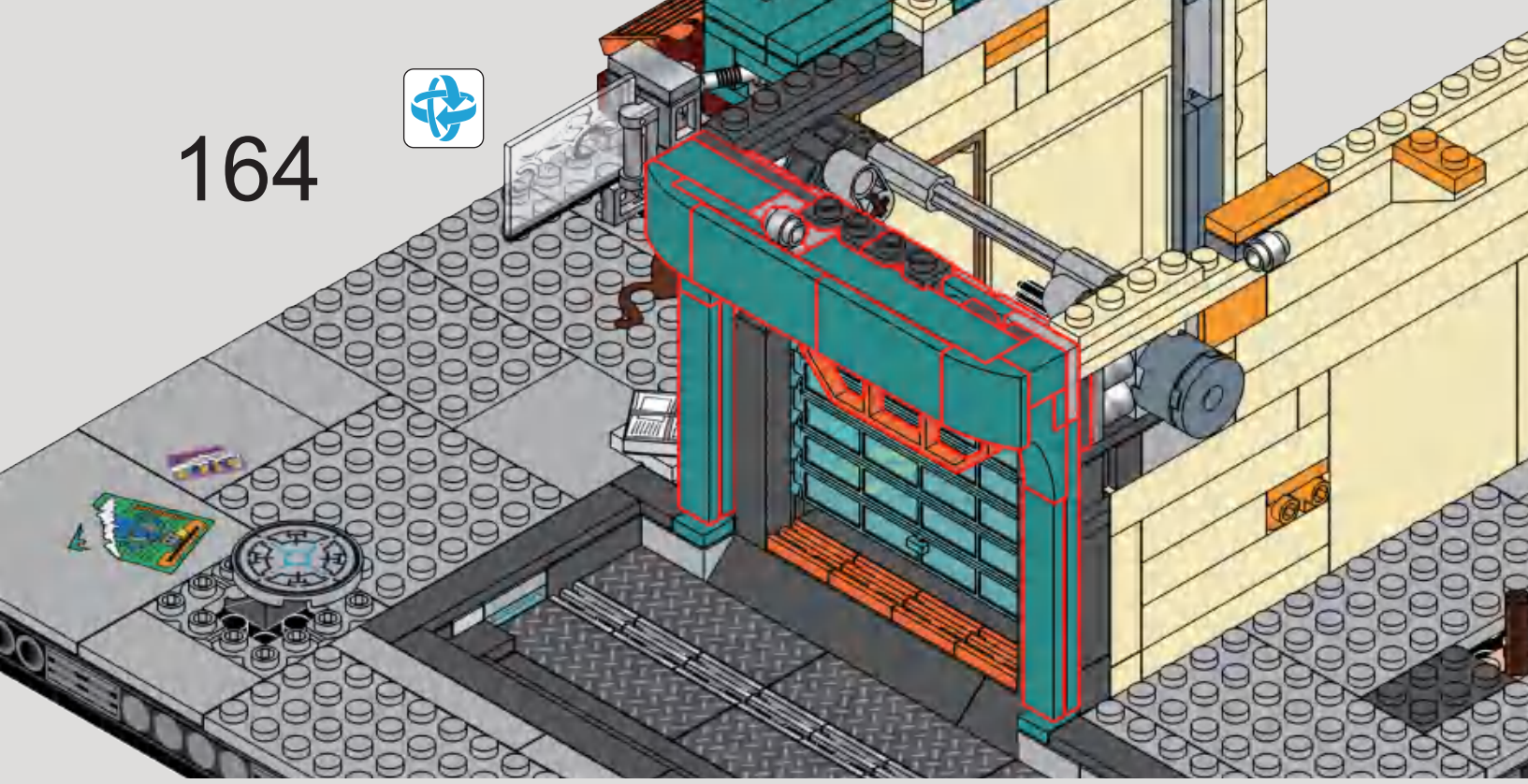

165

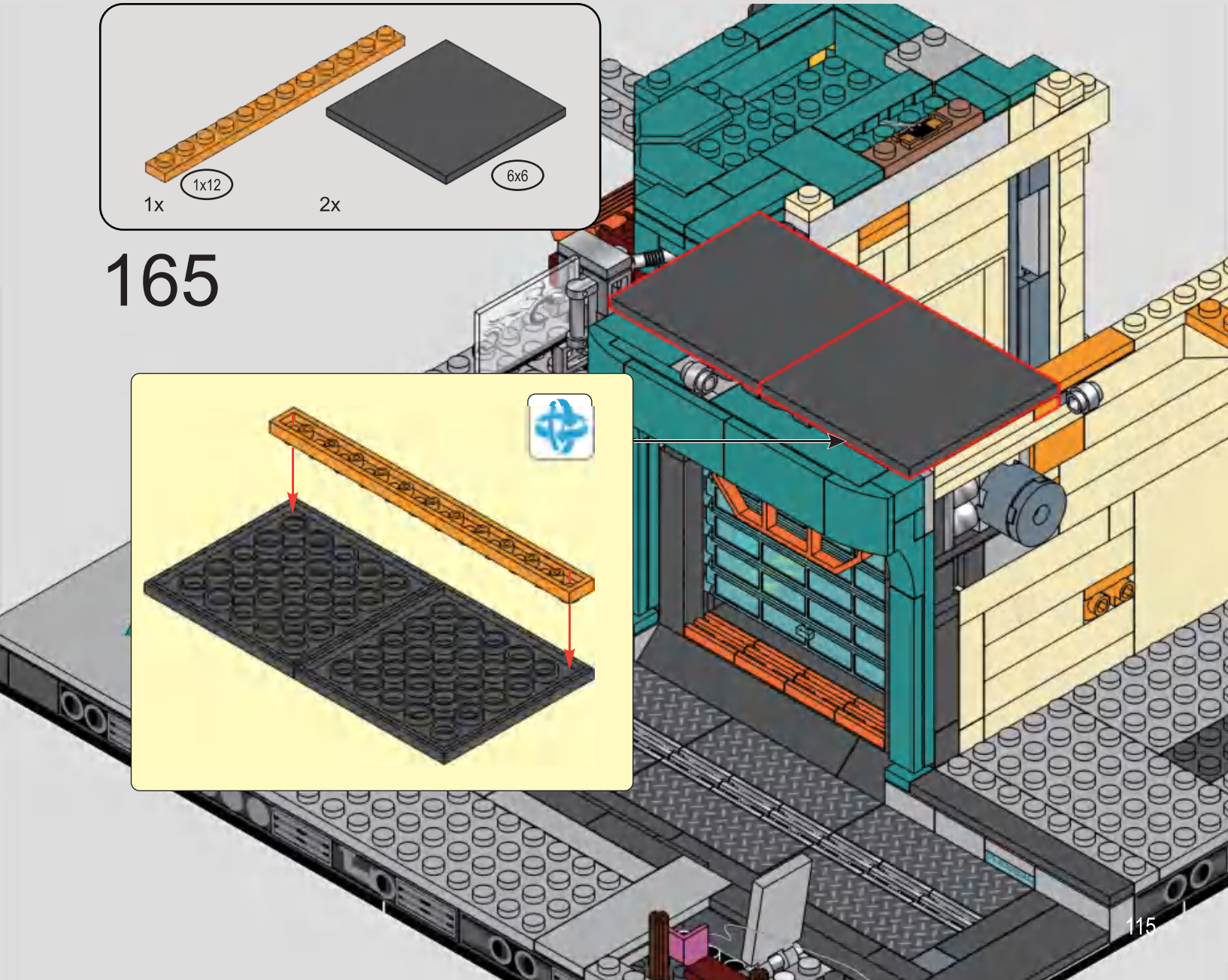

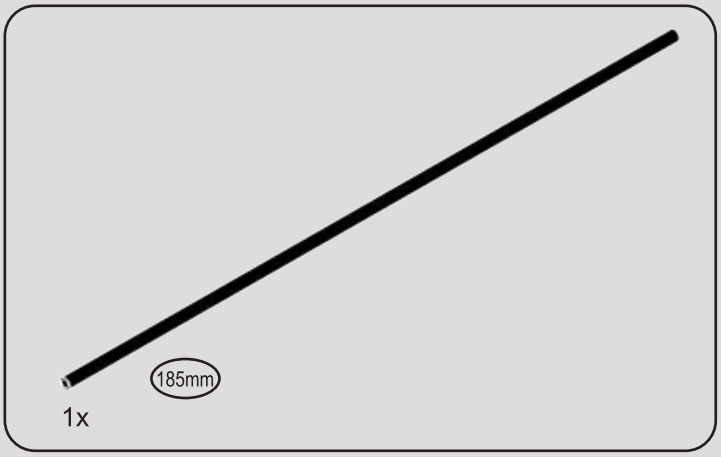

166

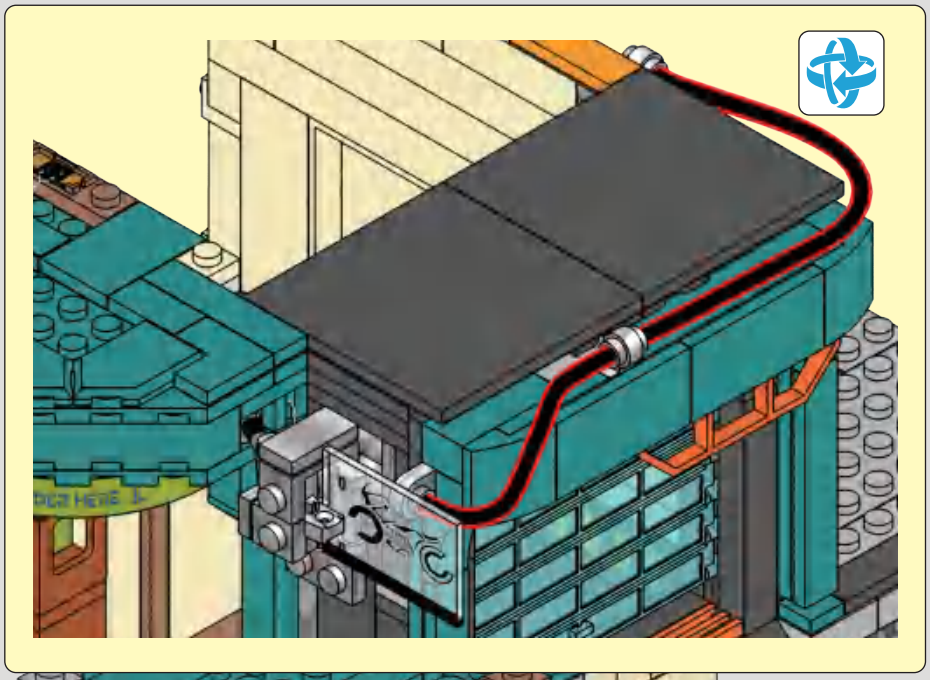

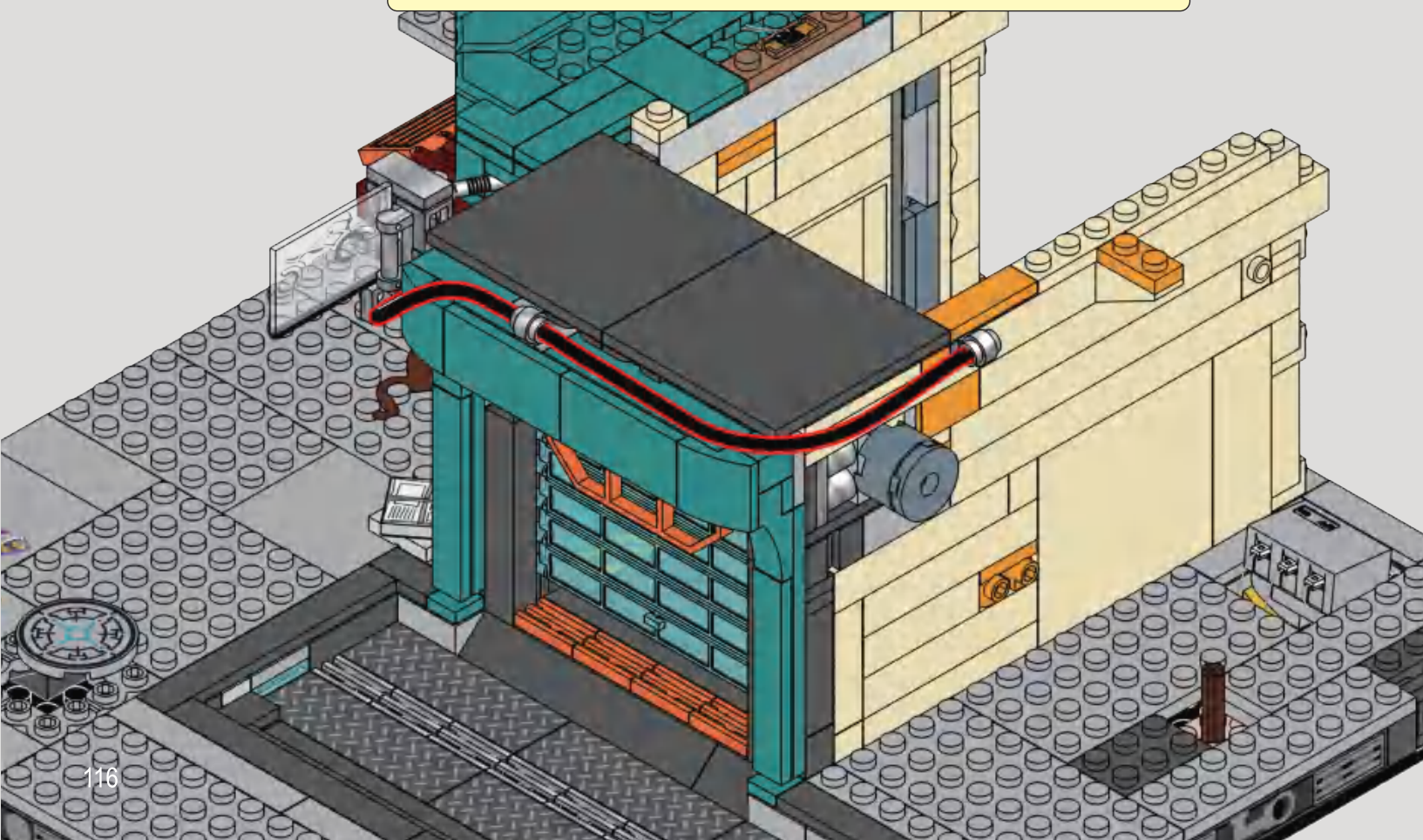

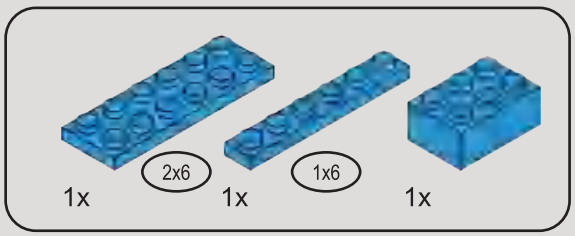

167

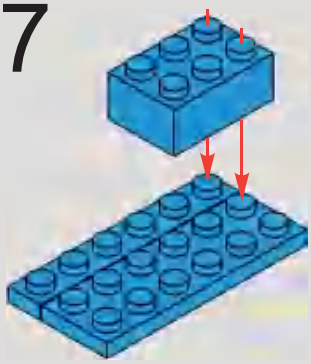

168

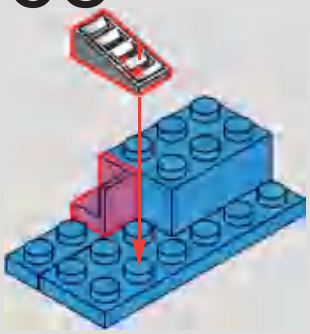

169

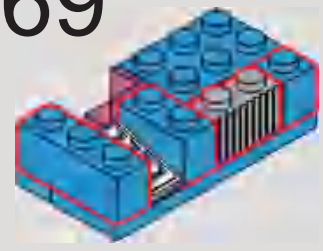

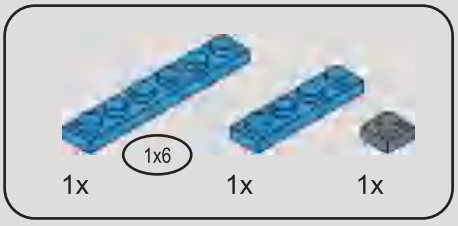

170

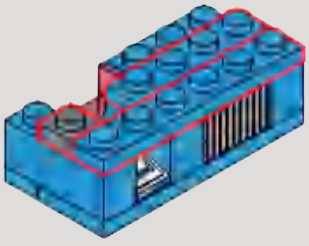

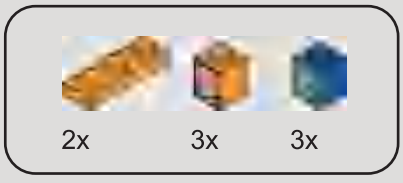

171

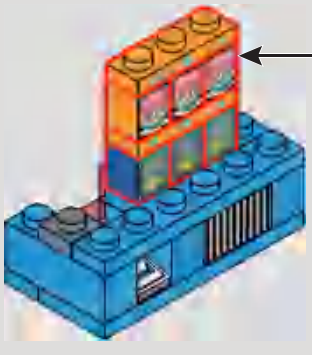

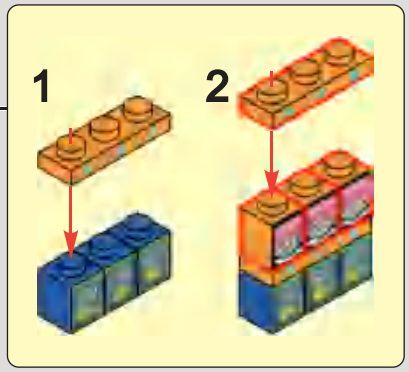

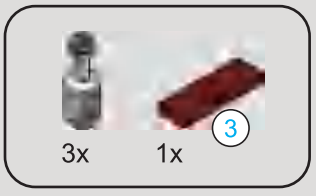

172

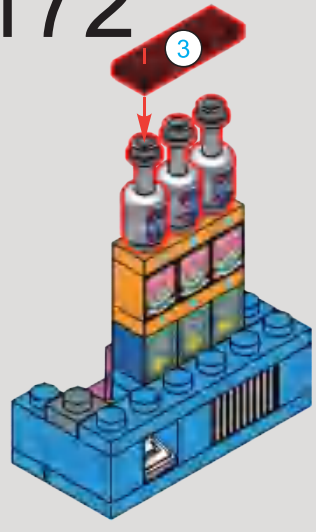

173

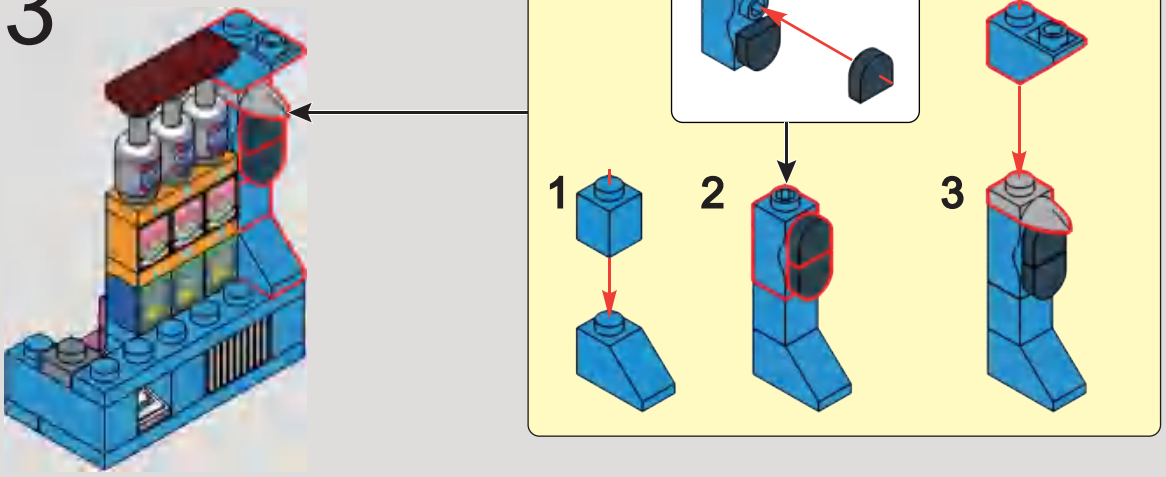

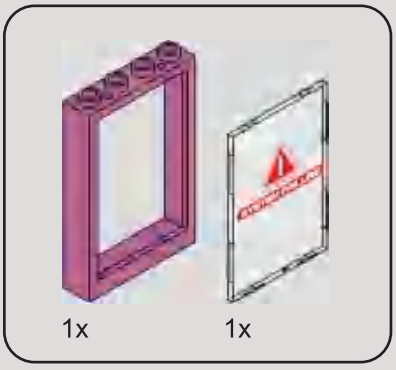

174

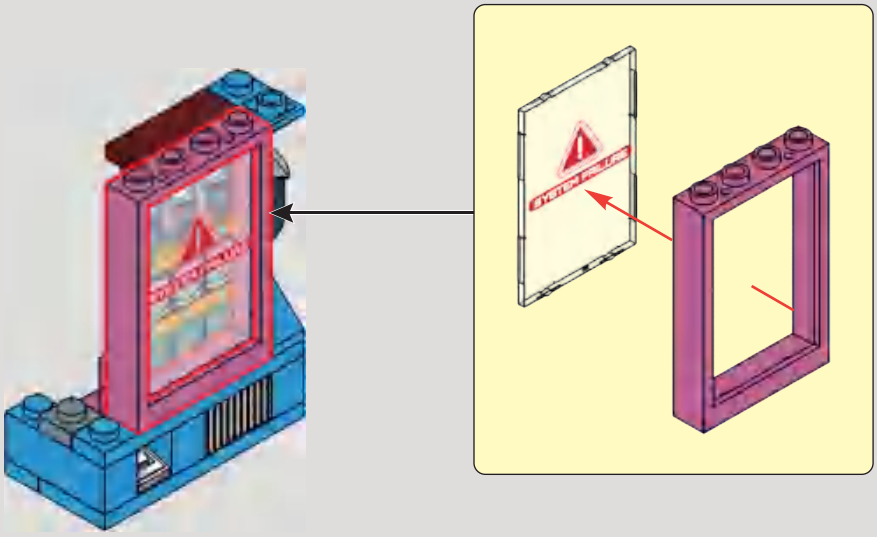

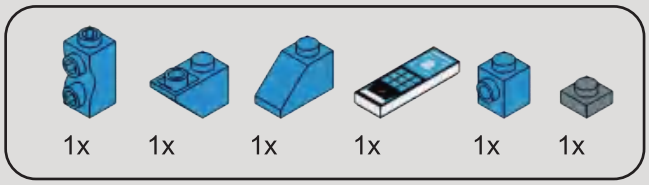

175

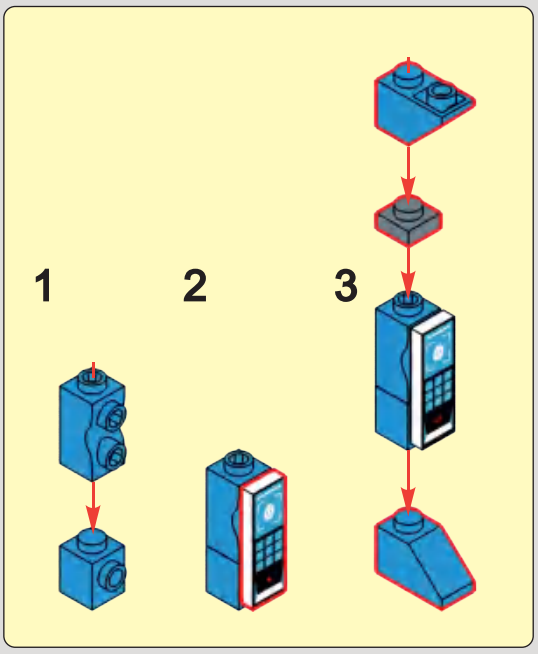

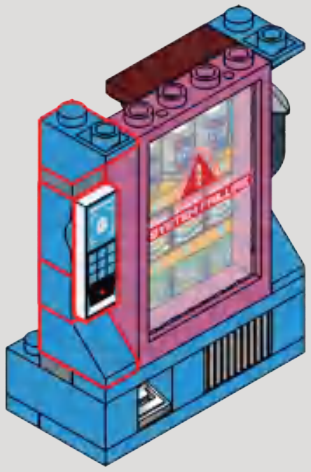

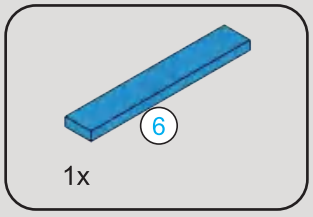

176

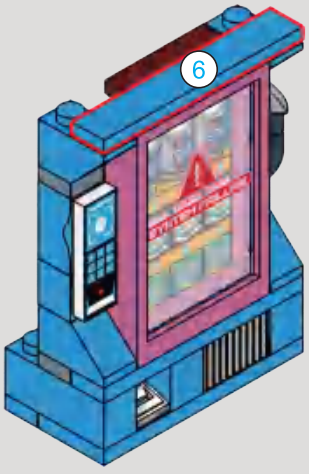

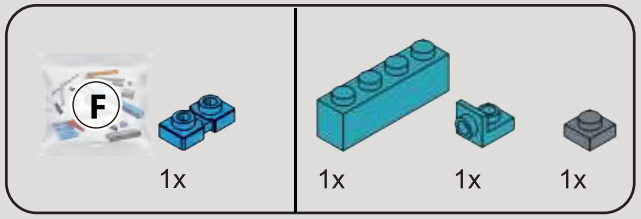

177

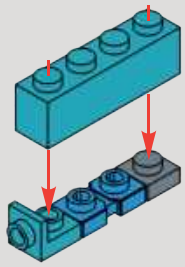

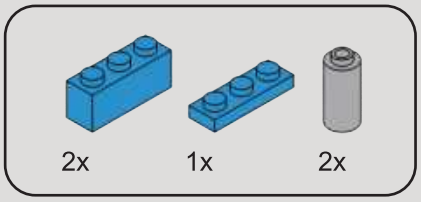

178

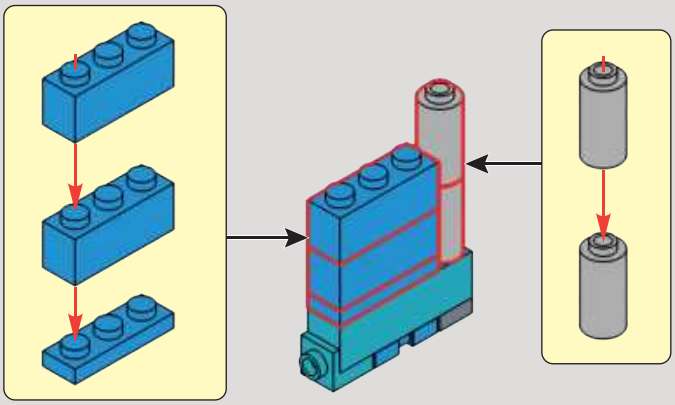

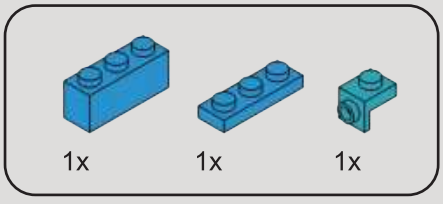

179

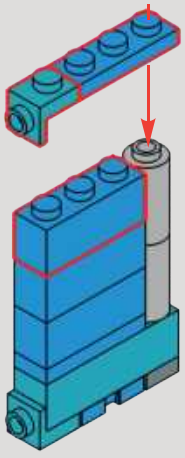

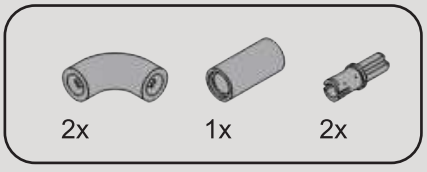

180

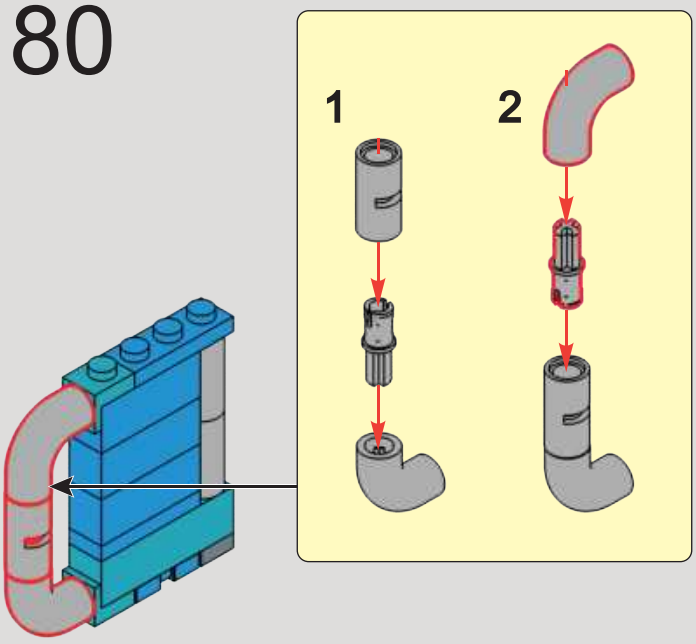

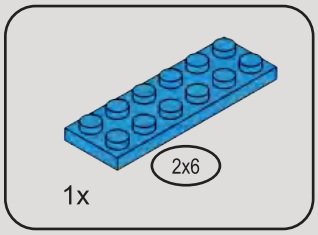

181

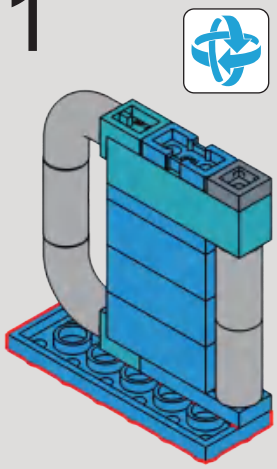

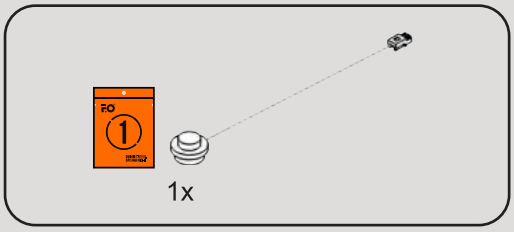

182

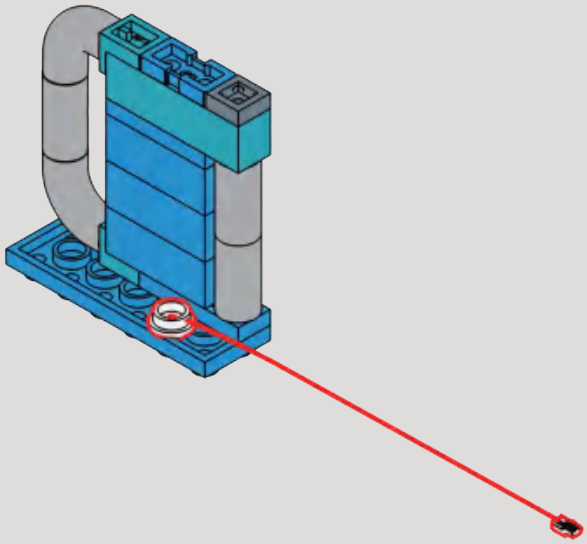

183

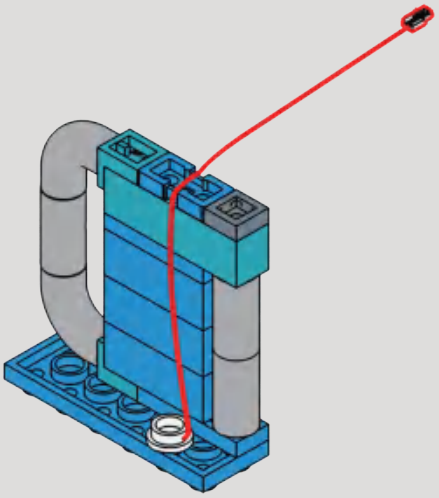

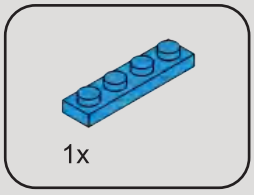

184

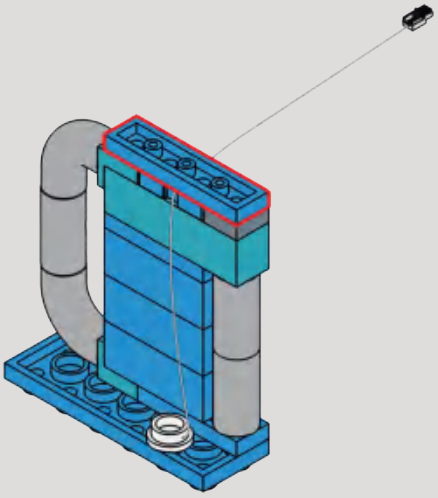

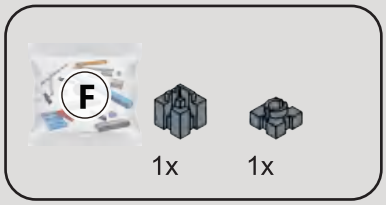

185

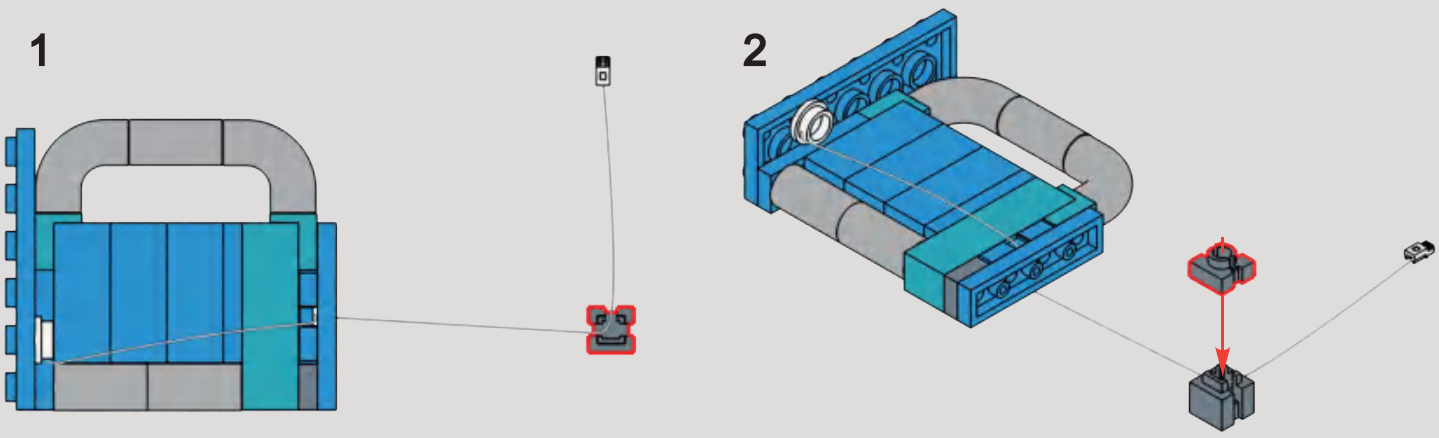

186

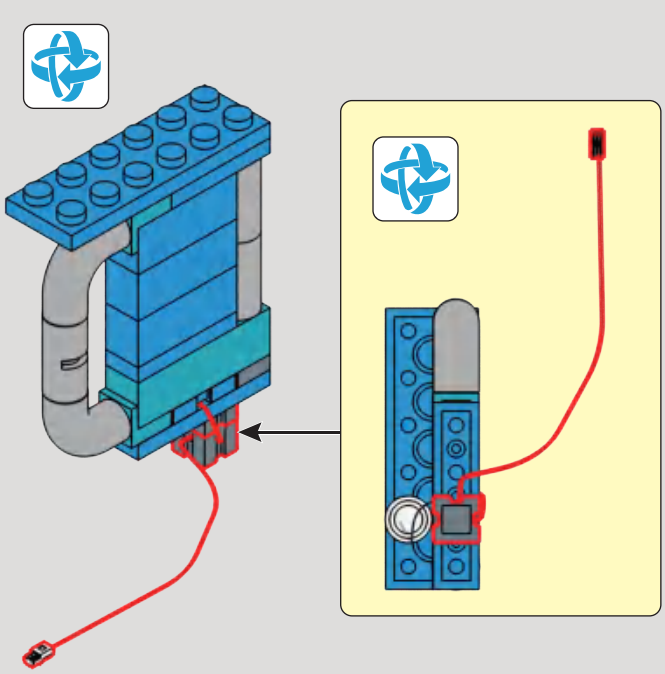

187

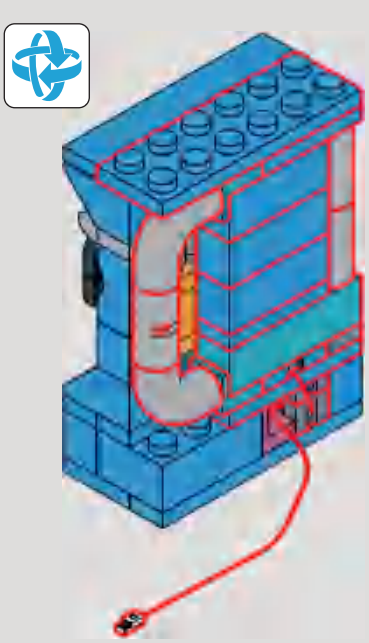

1x 1x 1x 2x 1x

188

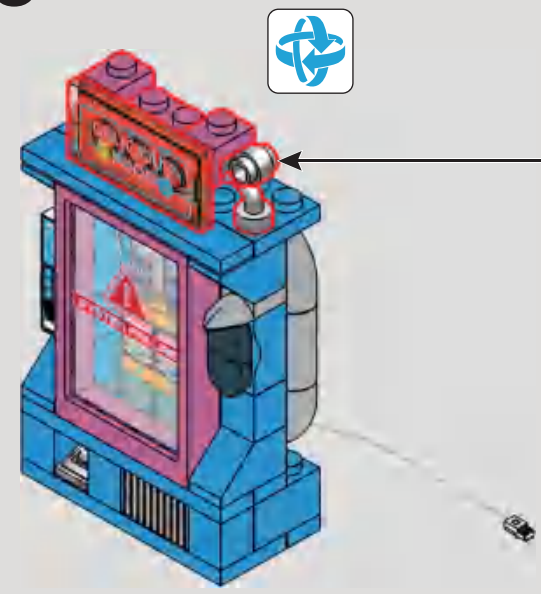

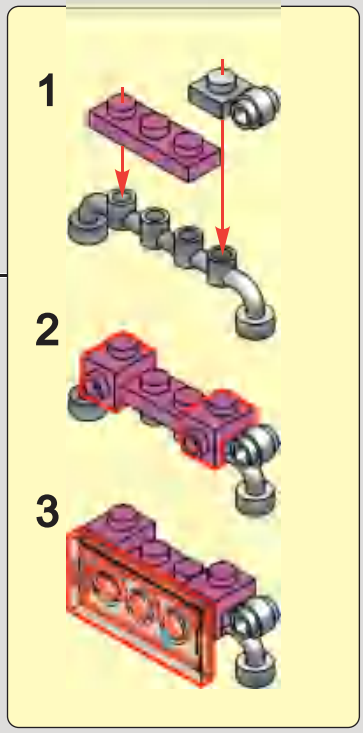

1x

189

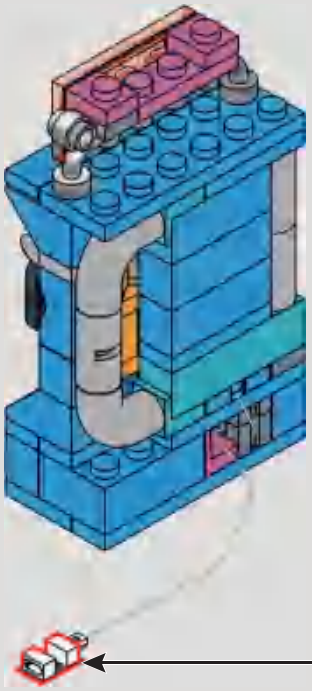

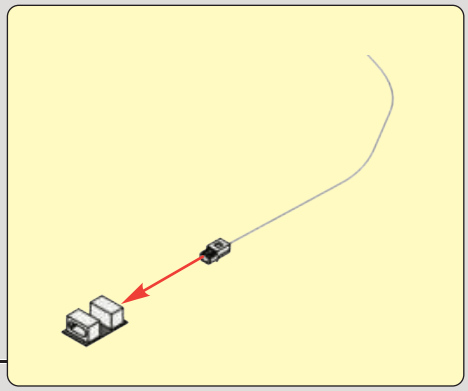

190

1

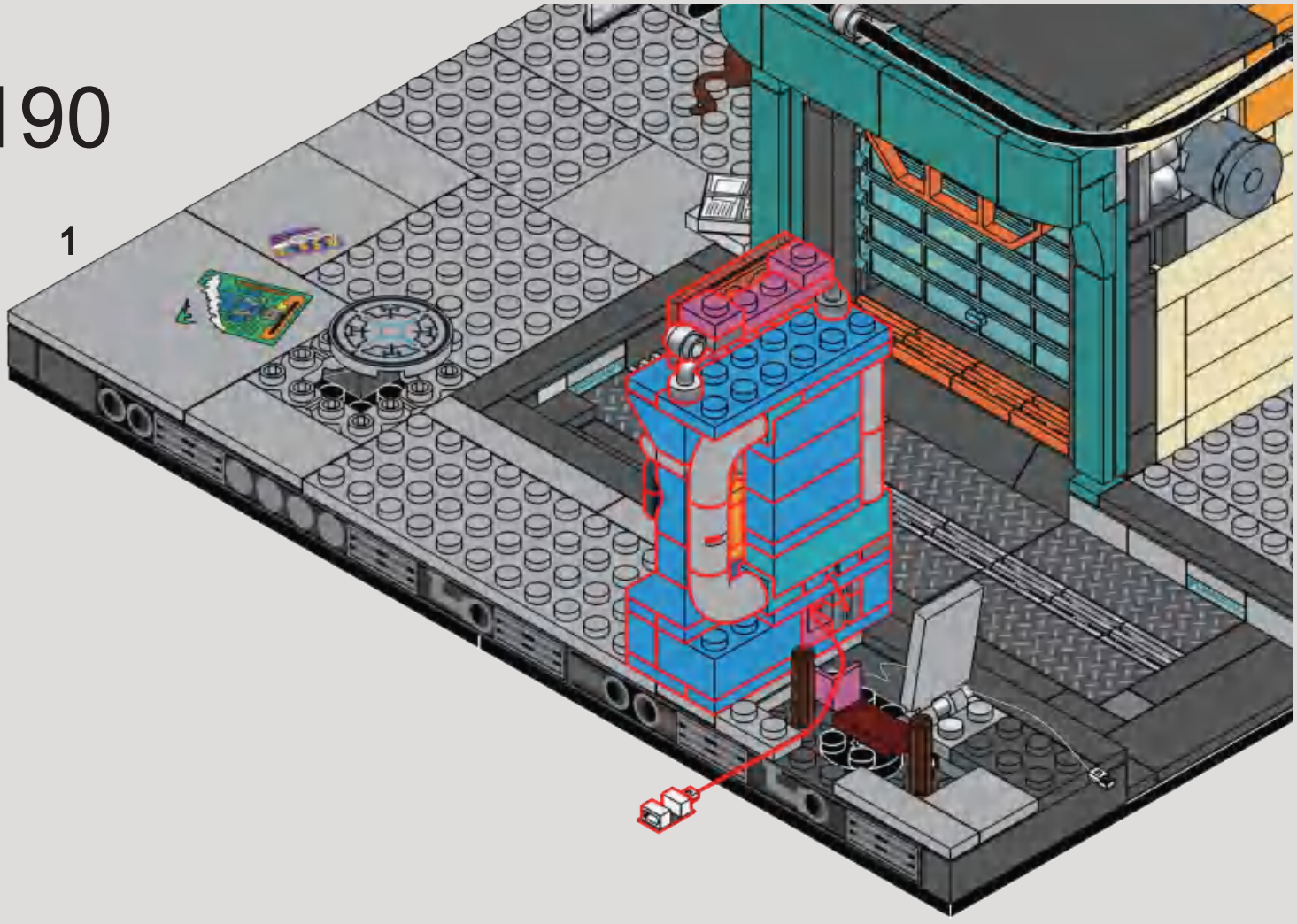

2

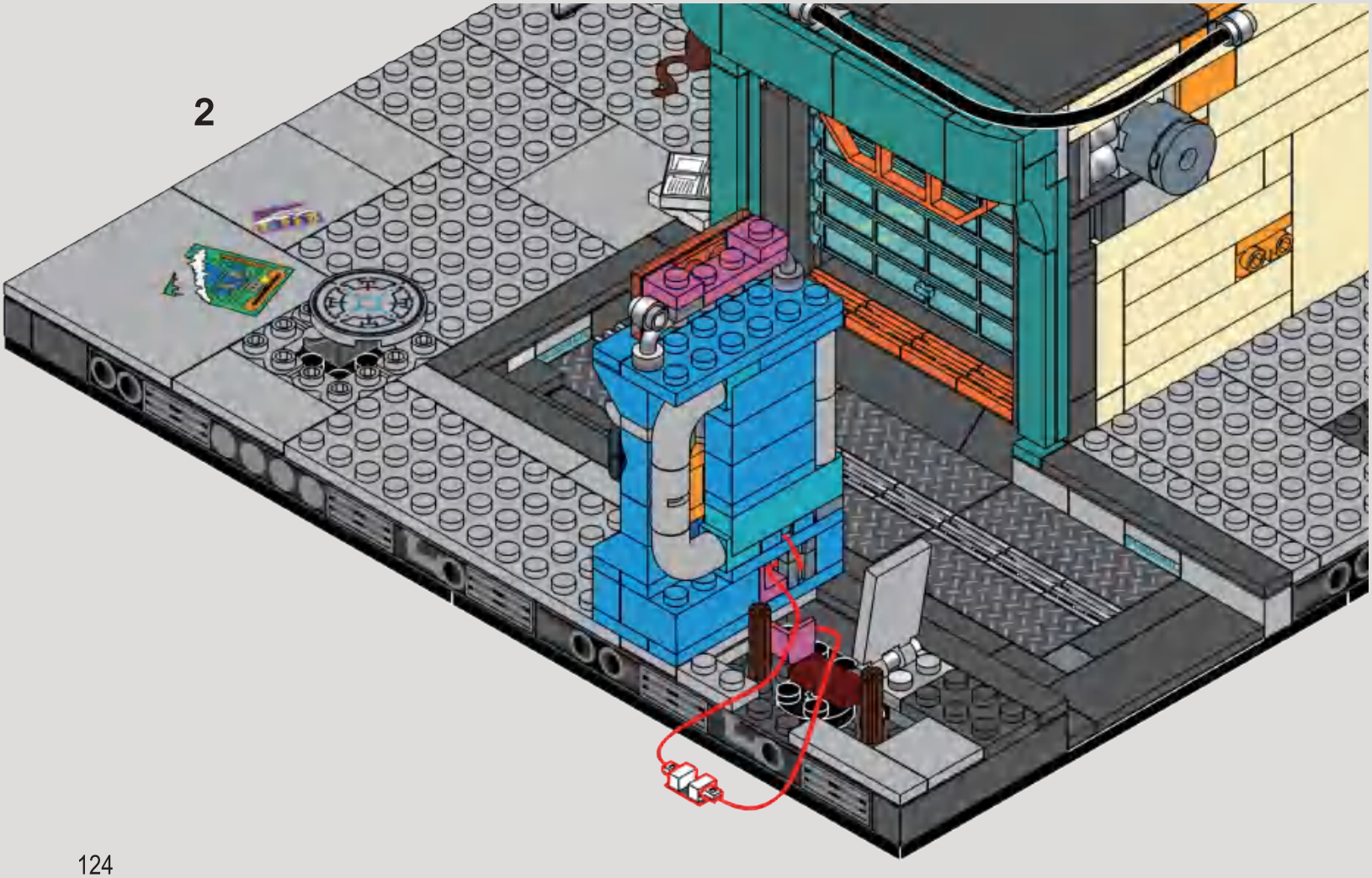

191

1

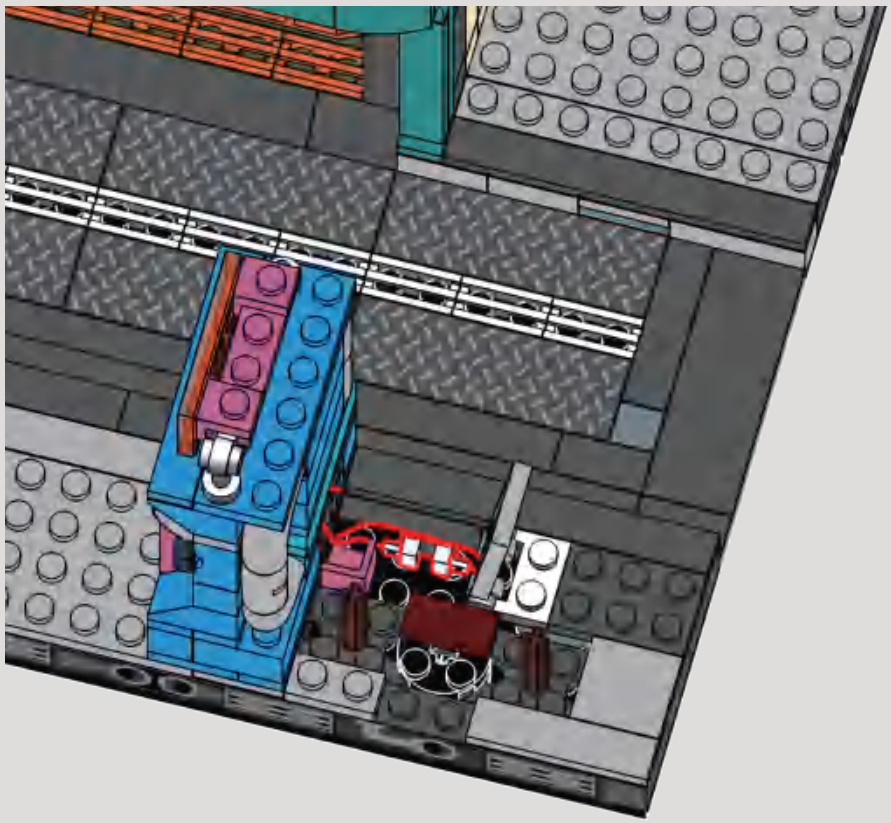

2

3

4
F
F.O
2
DELIGHT
DAY AND NIGHT

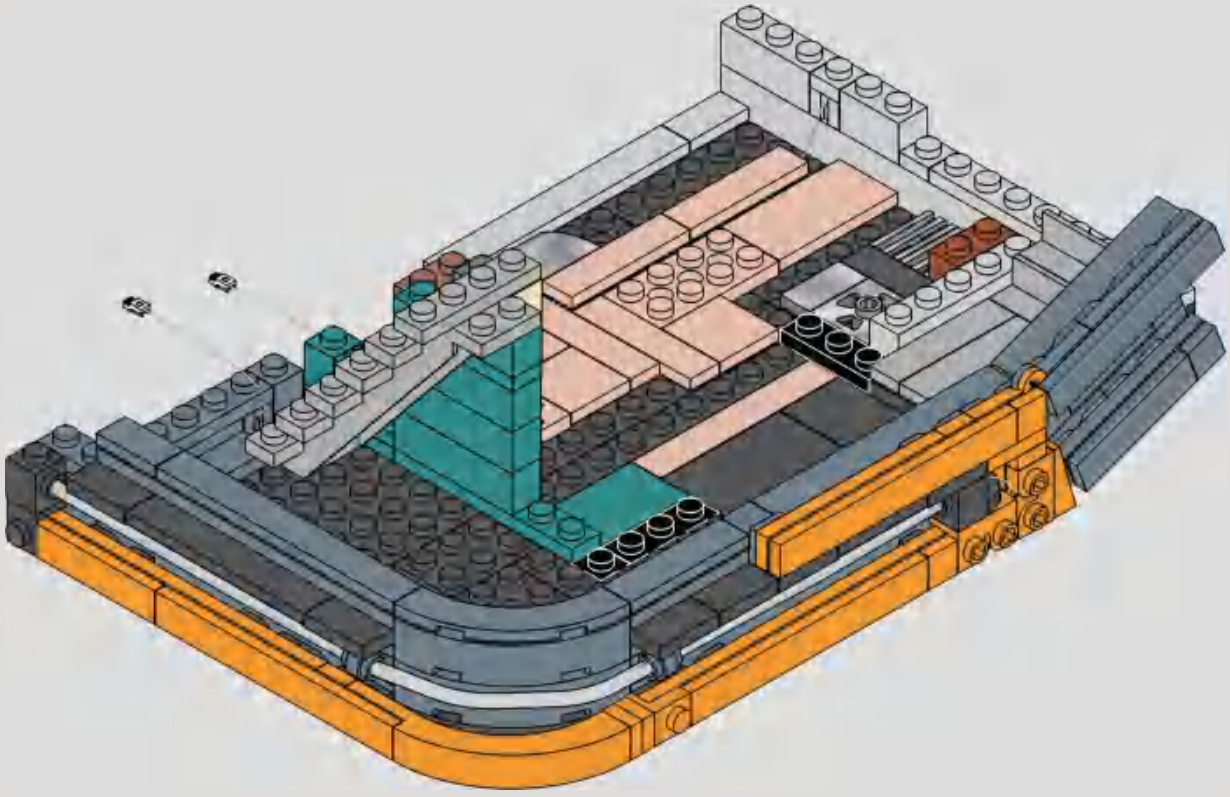

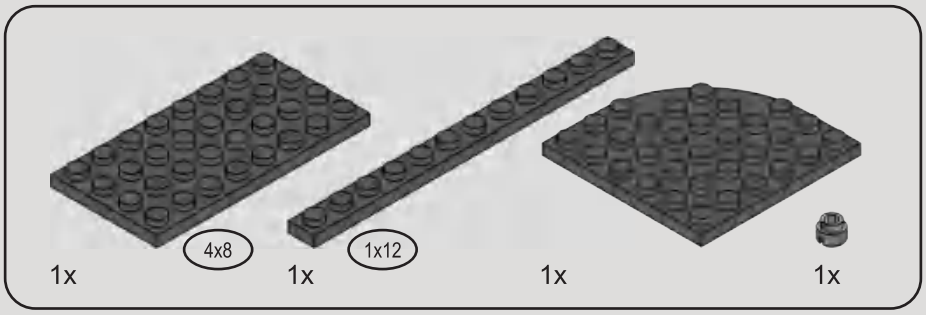

192

1

2

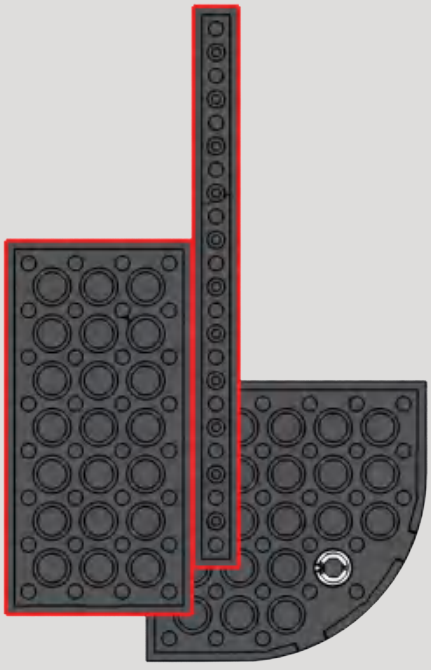

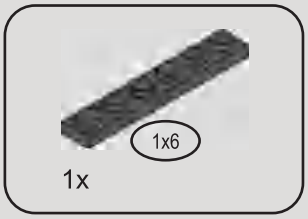

193

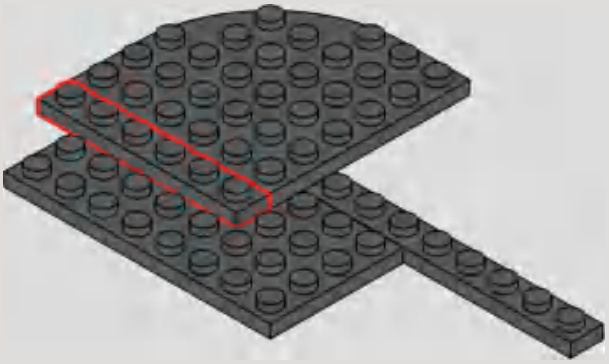

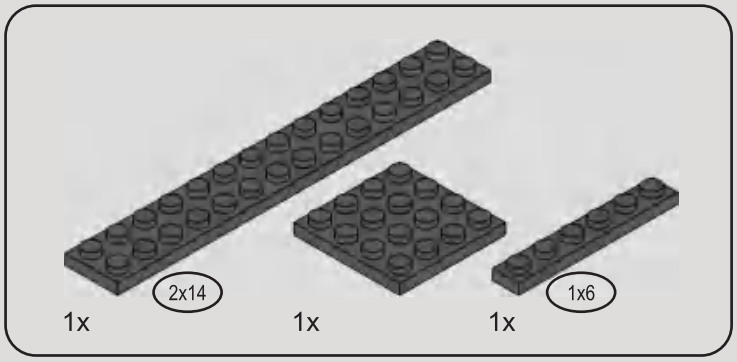

194

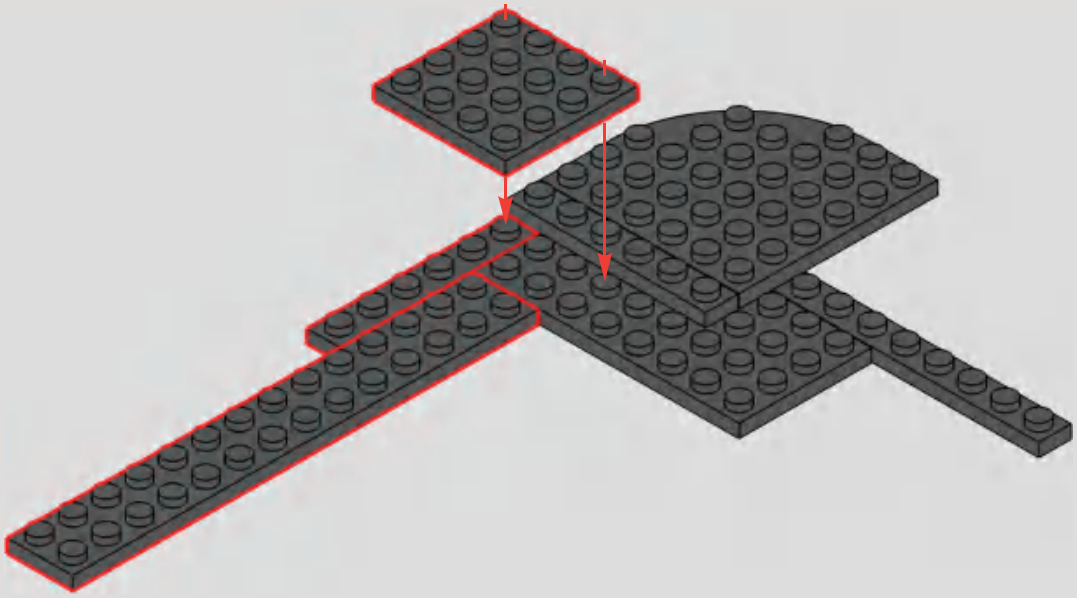

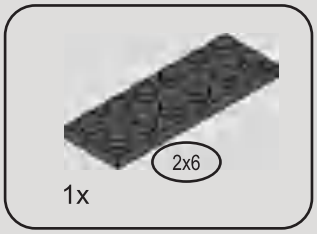

195

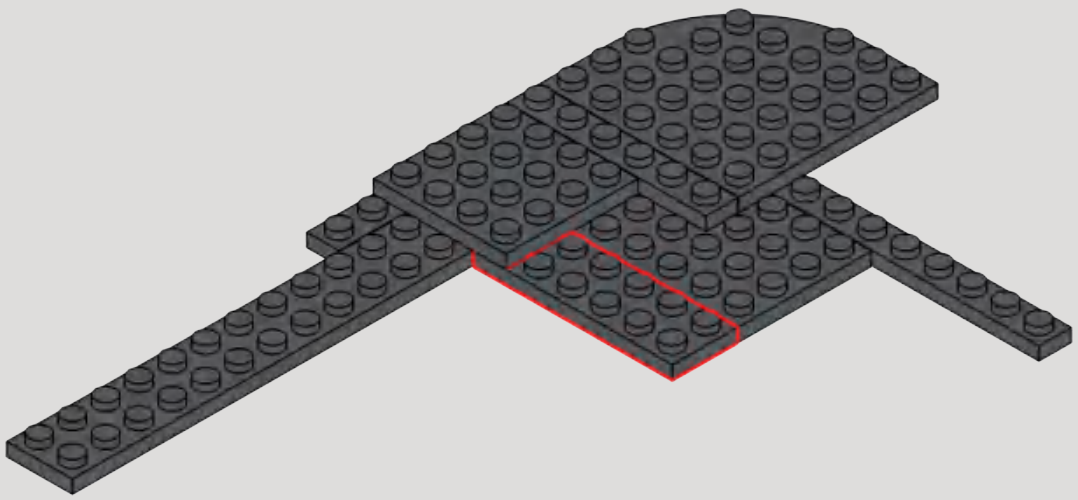

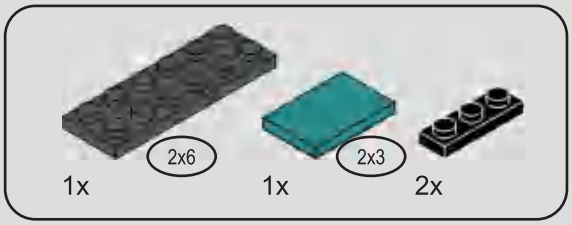

196

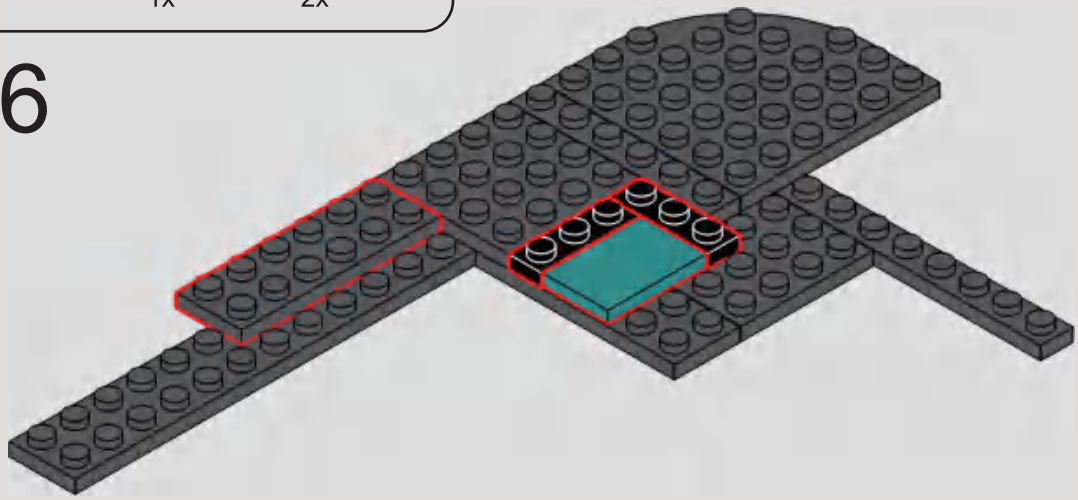

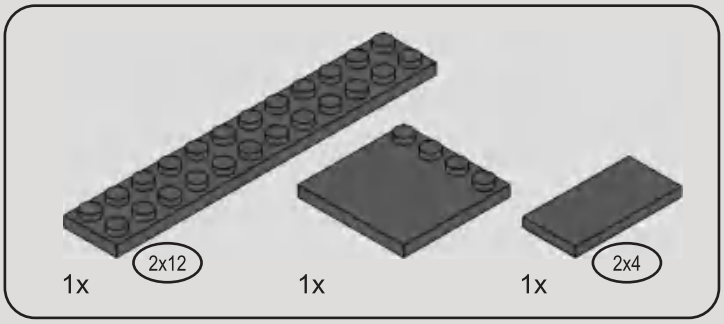

197

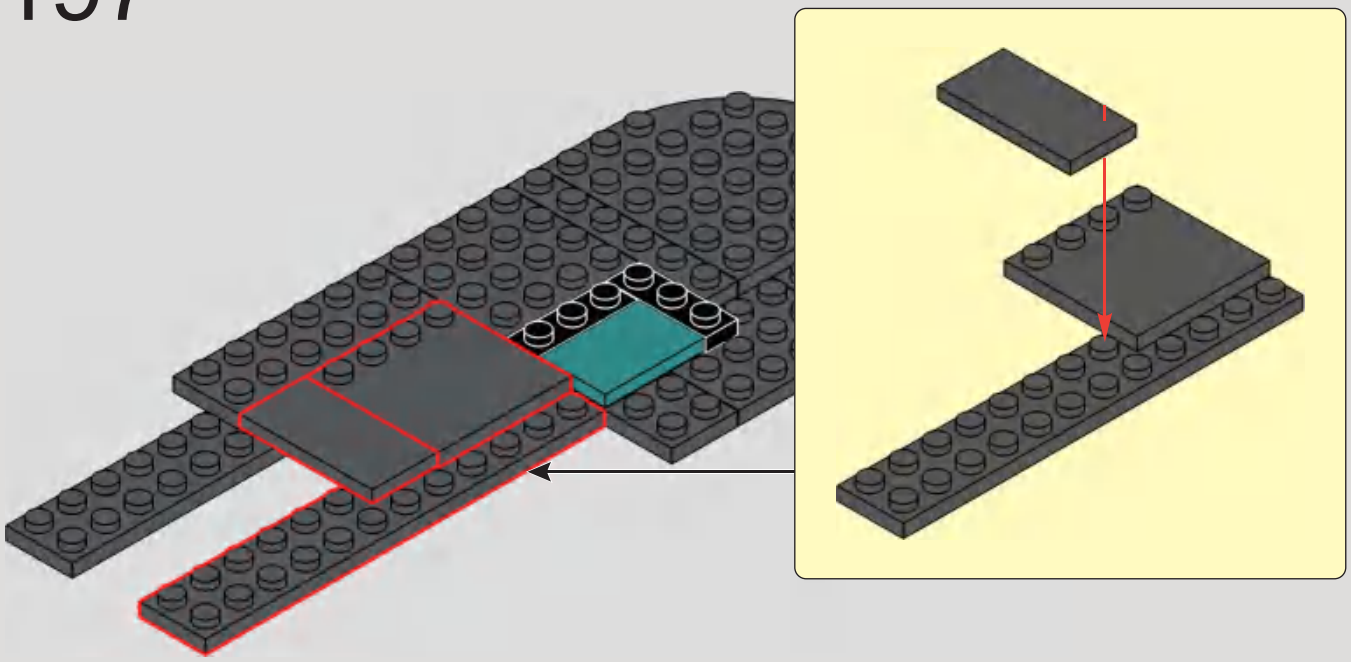

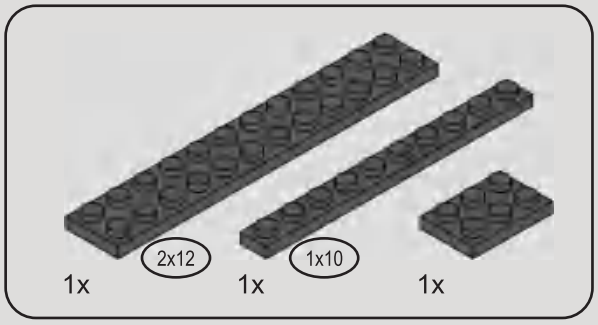

198

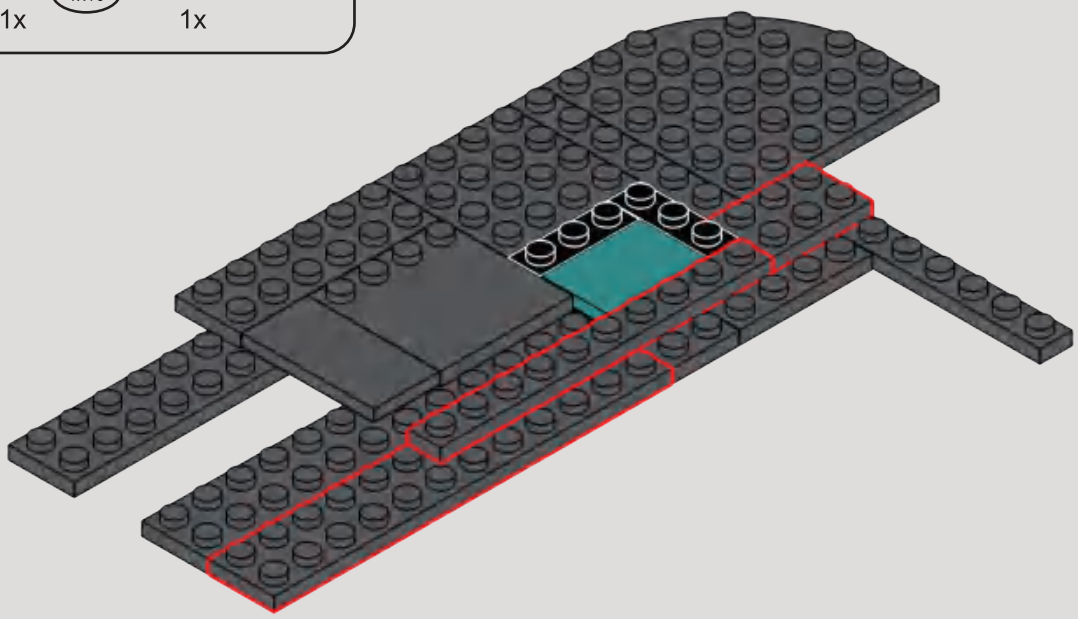

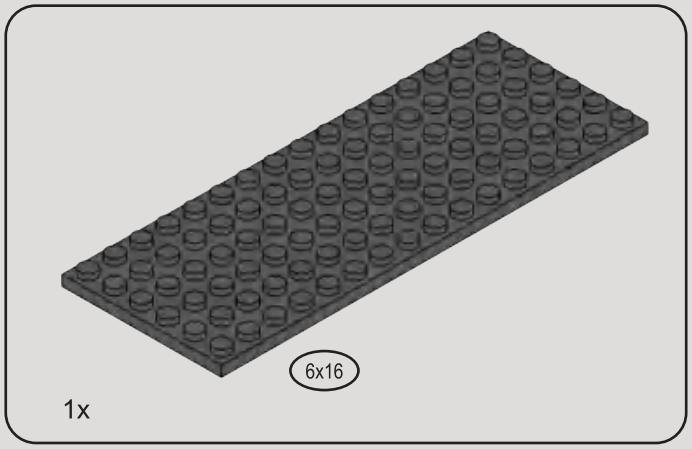

199

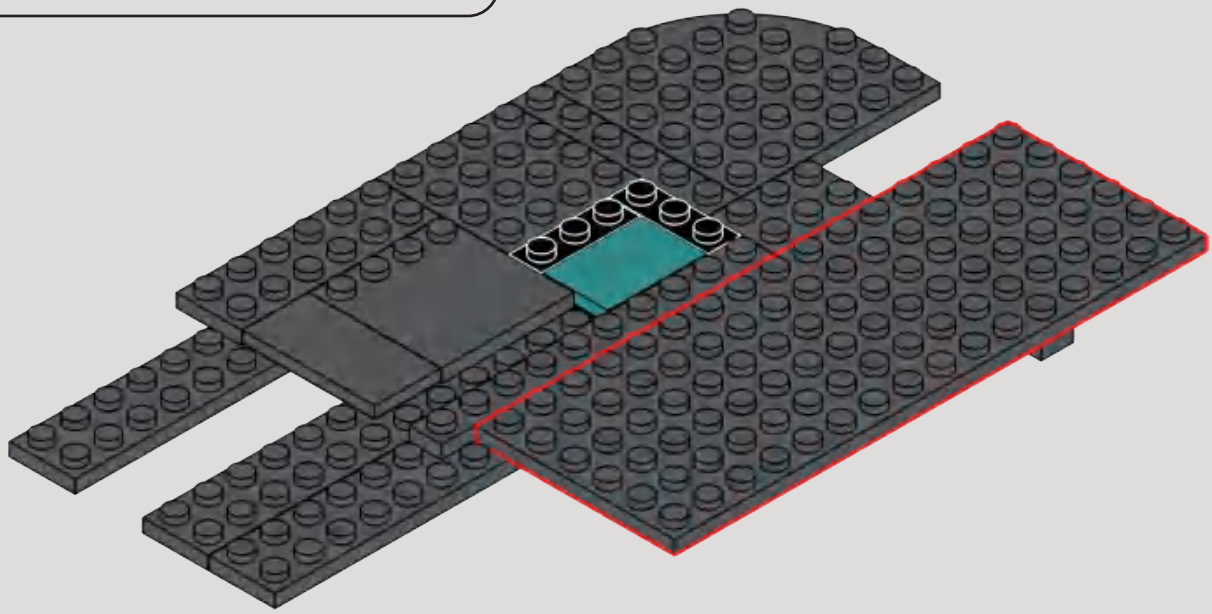

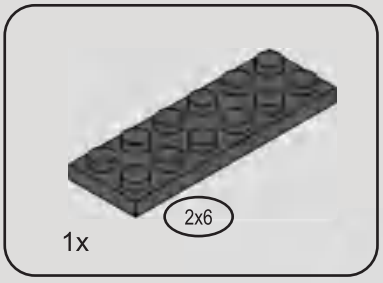

200

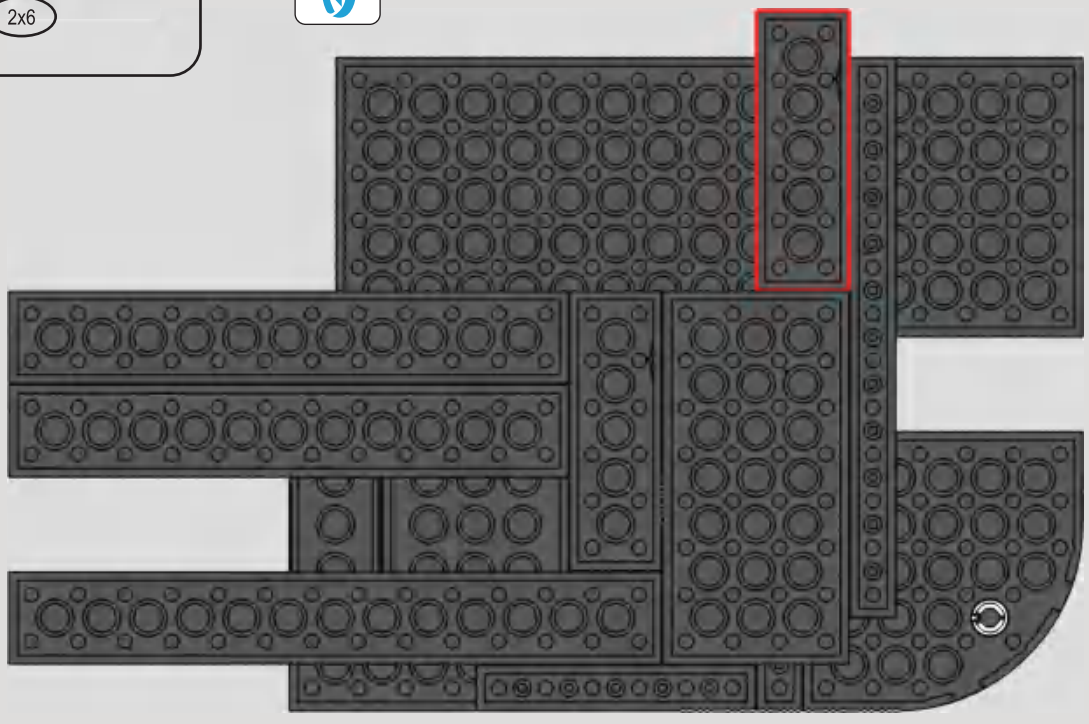

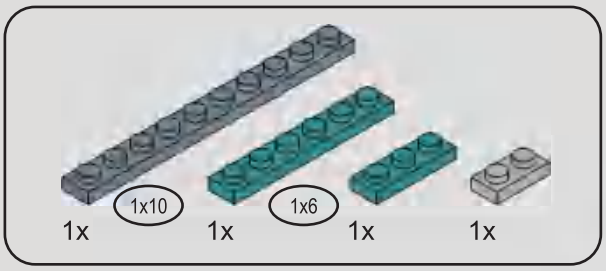

201

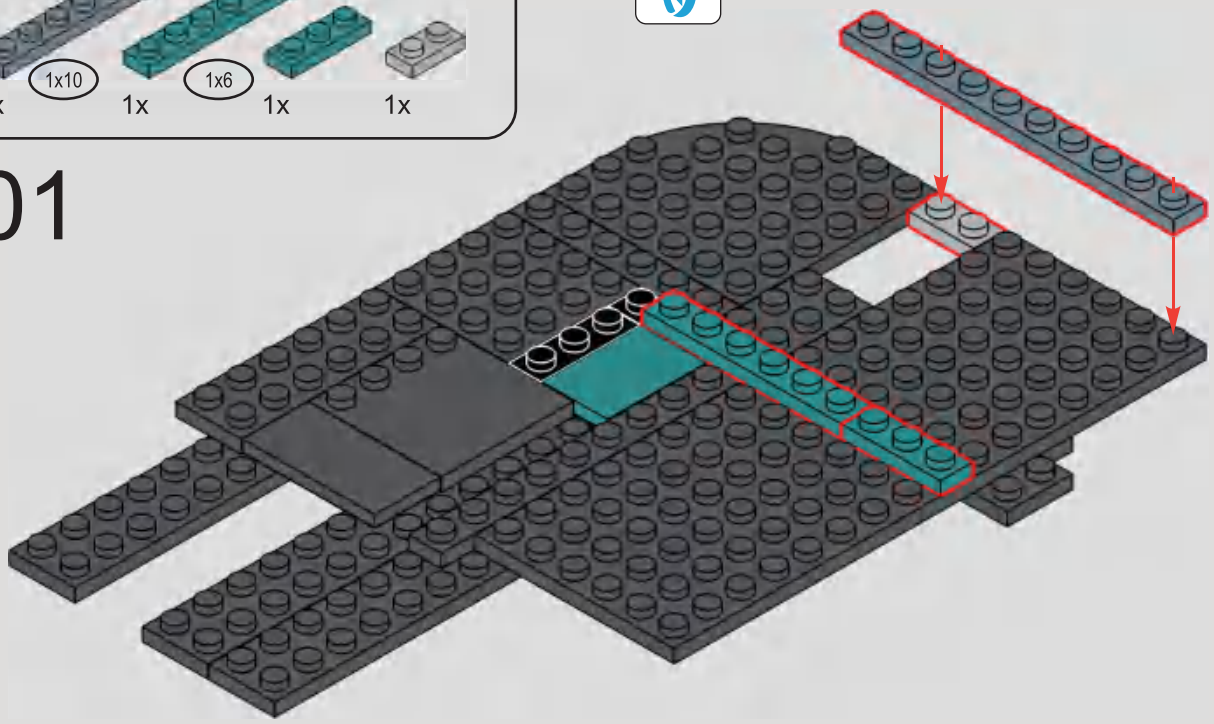

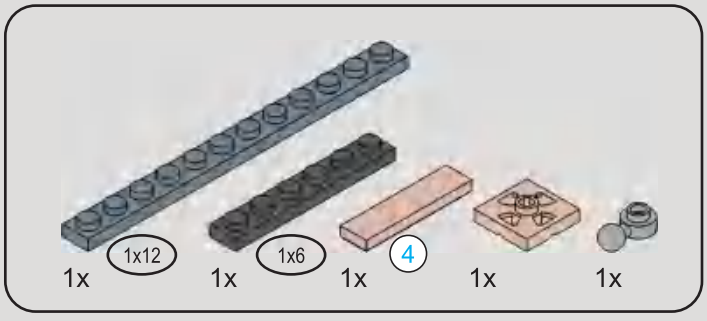

202

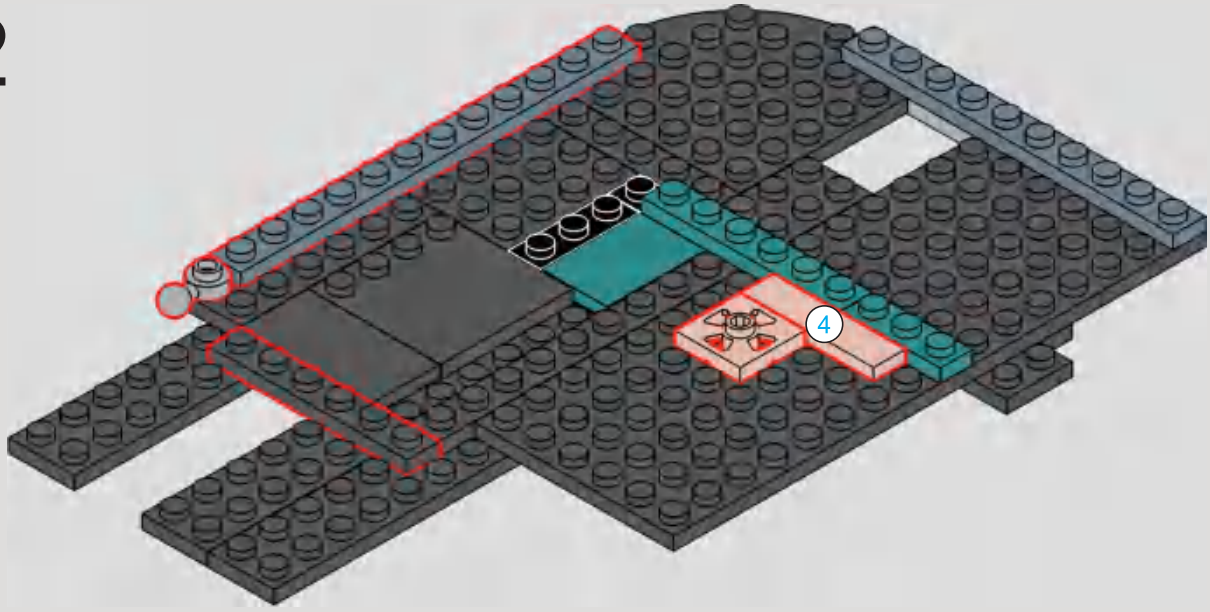

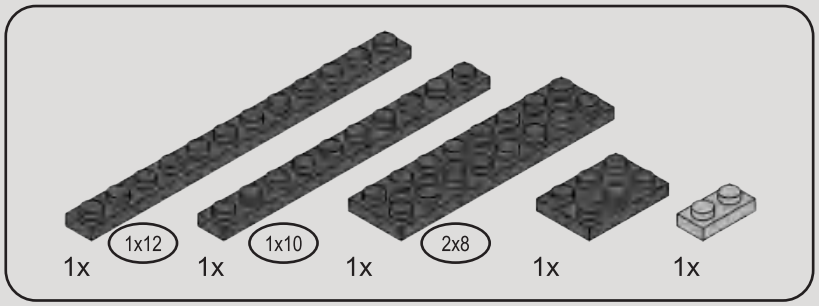

203

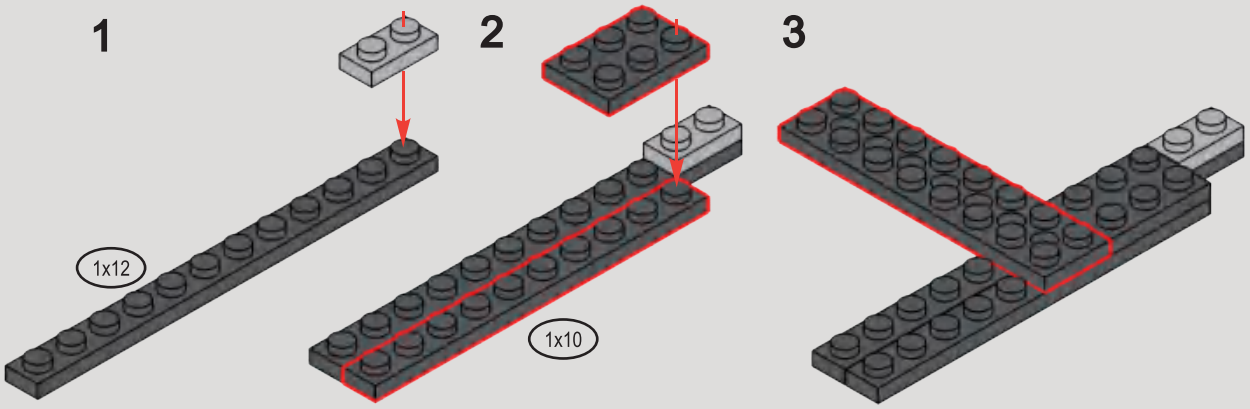

204

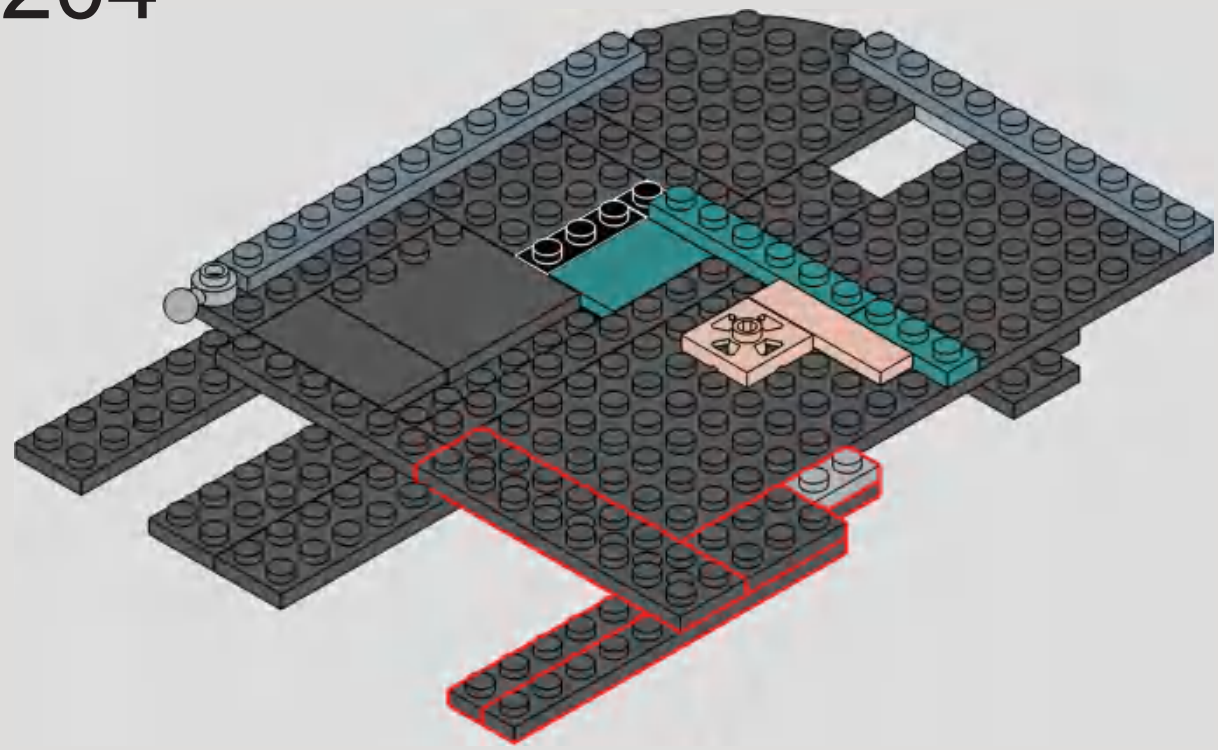

205

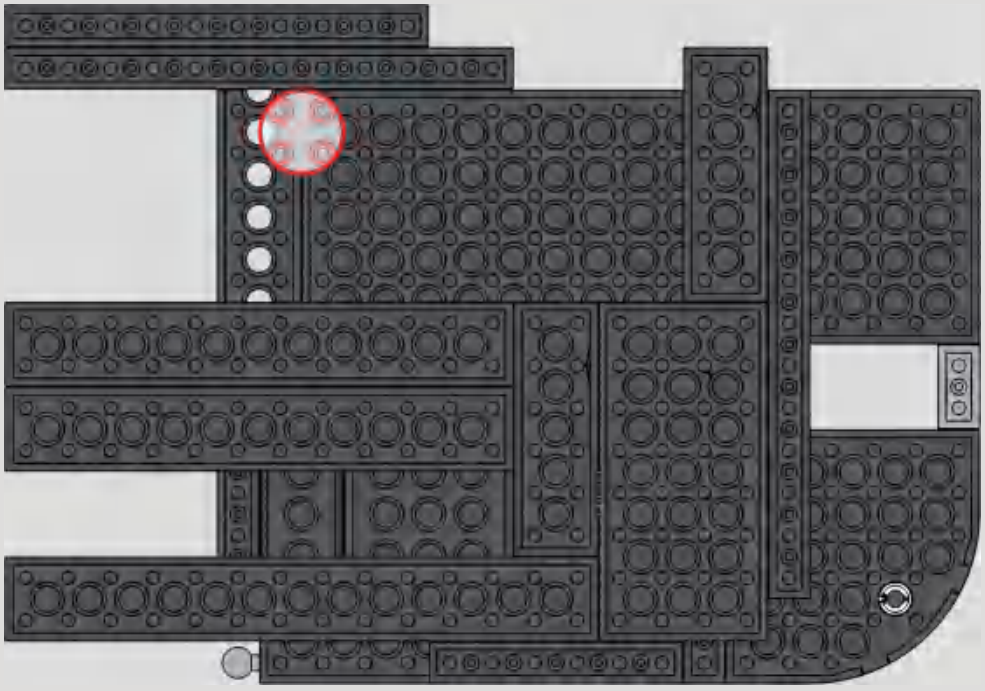

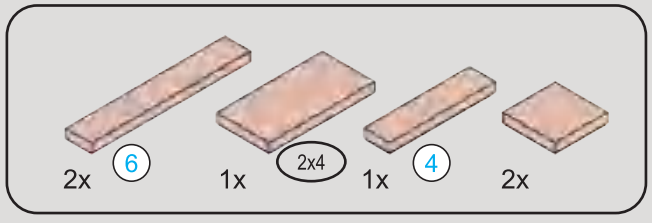

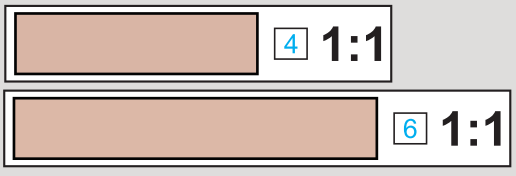

206

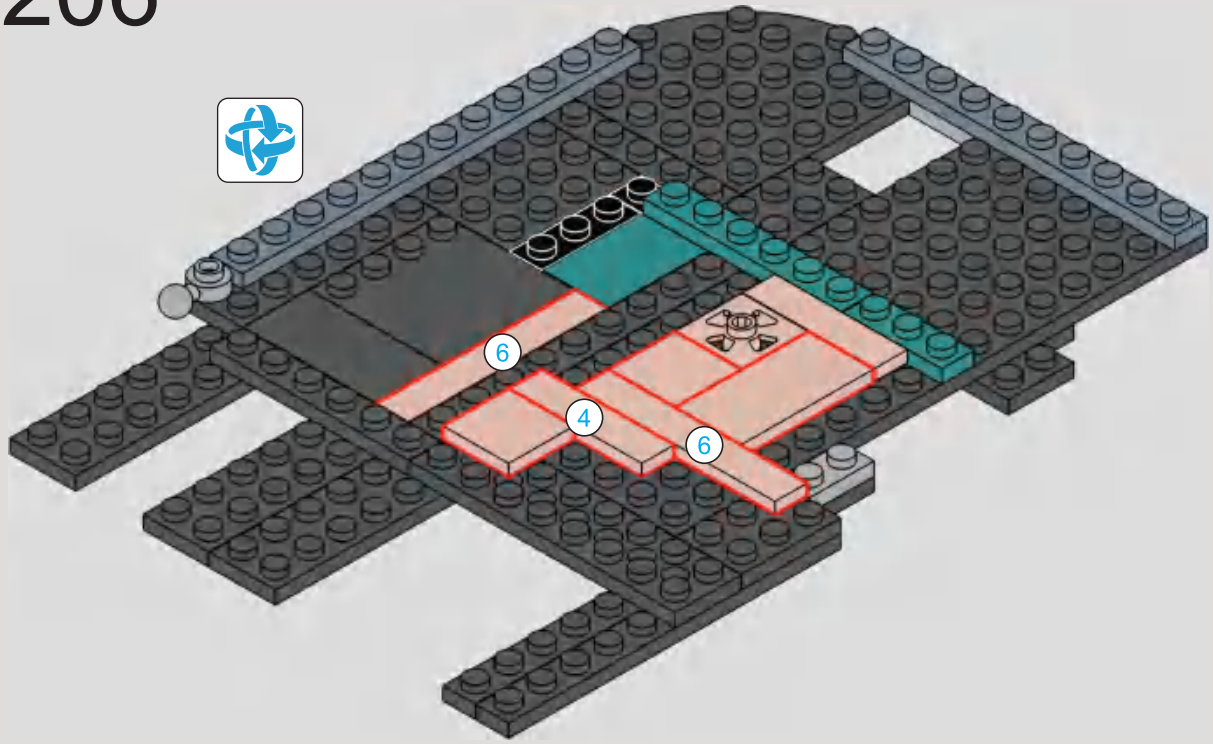

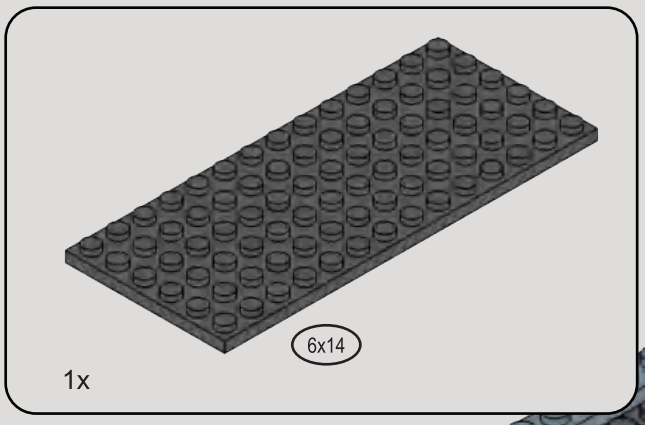

207

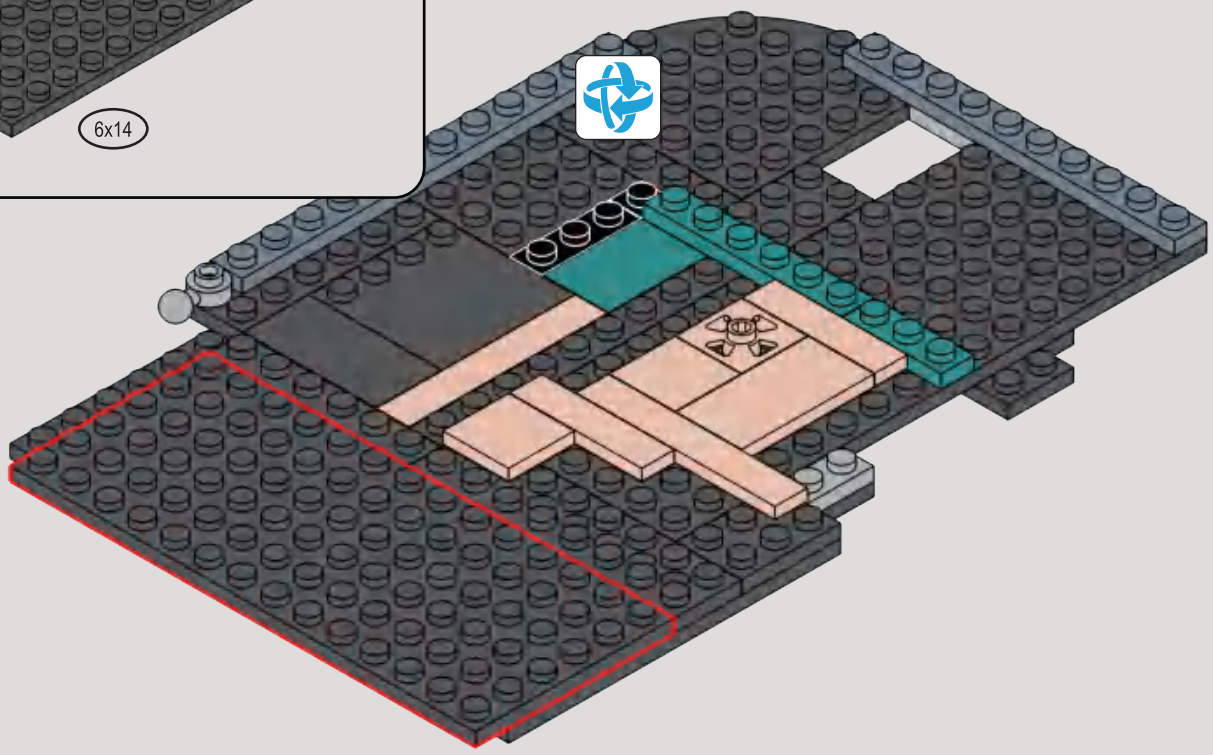

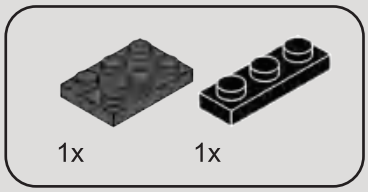

208

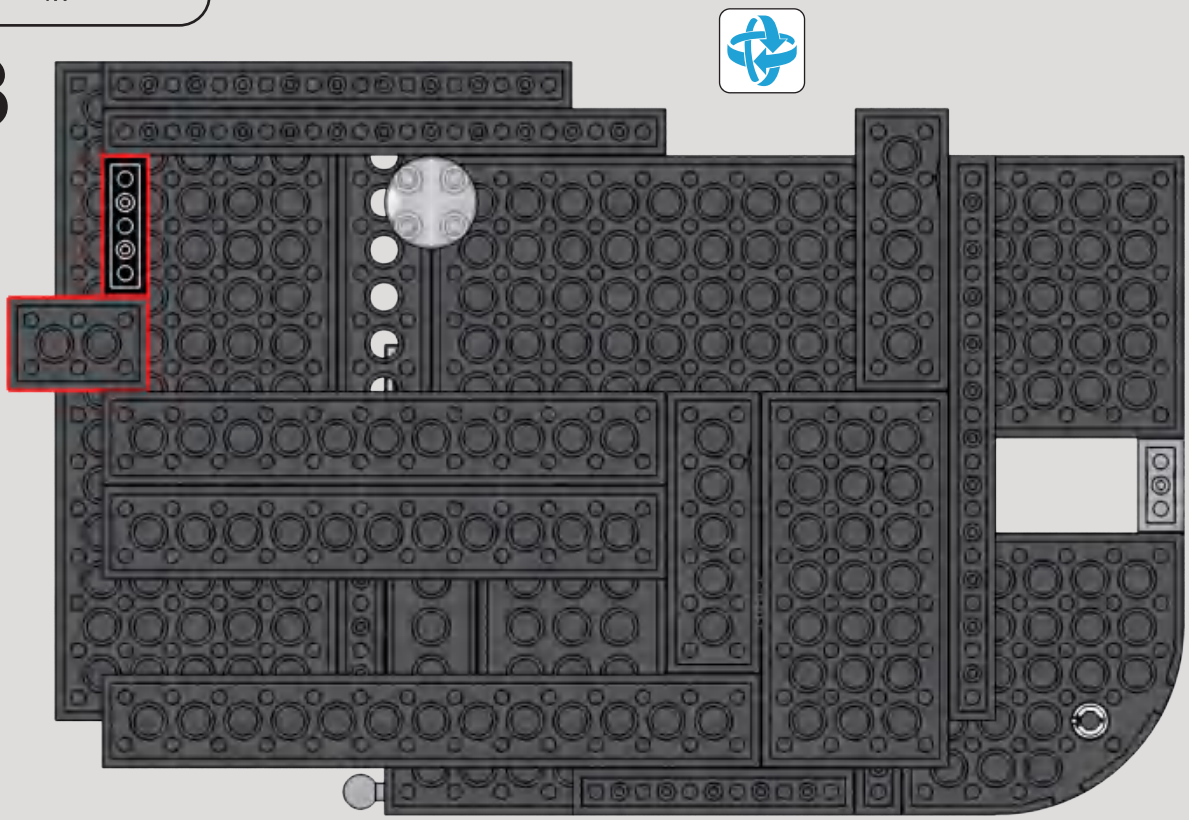

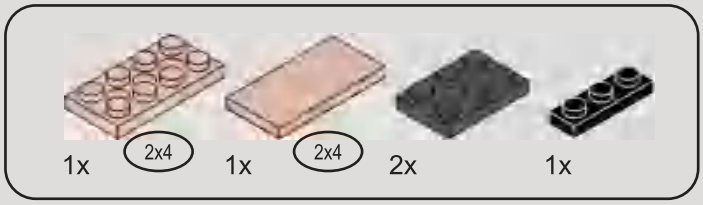

209

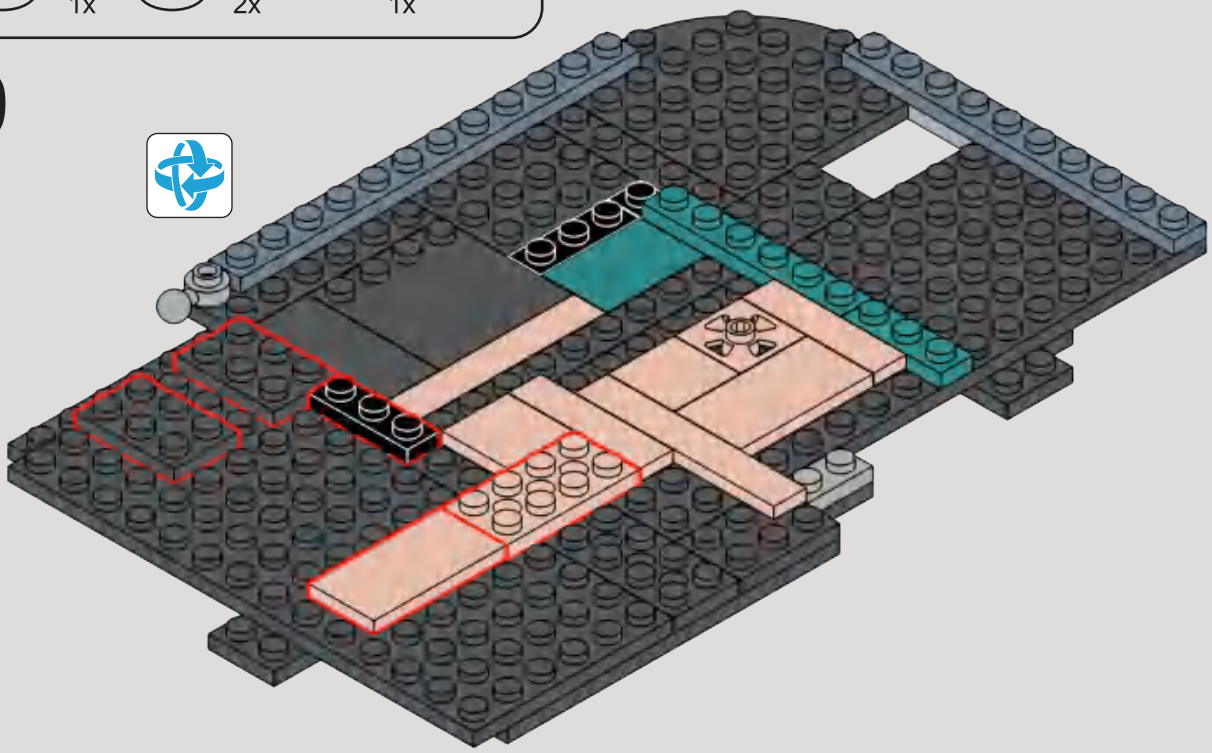

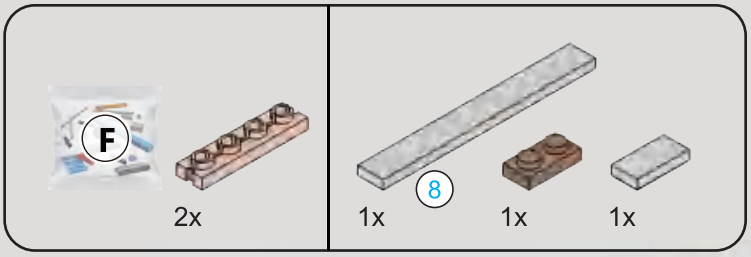

210

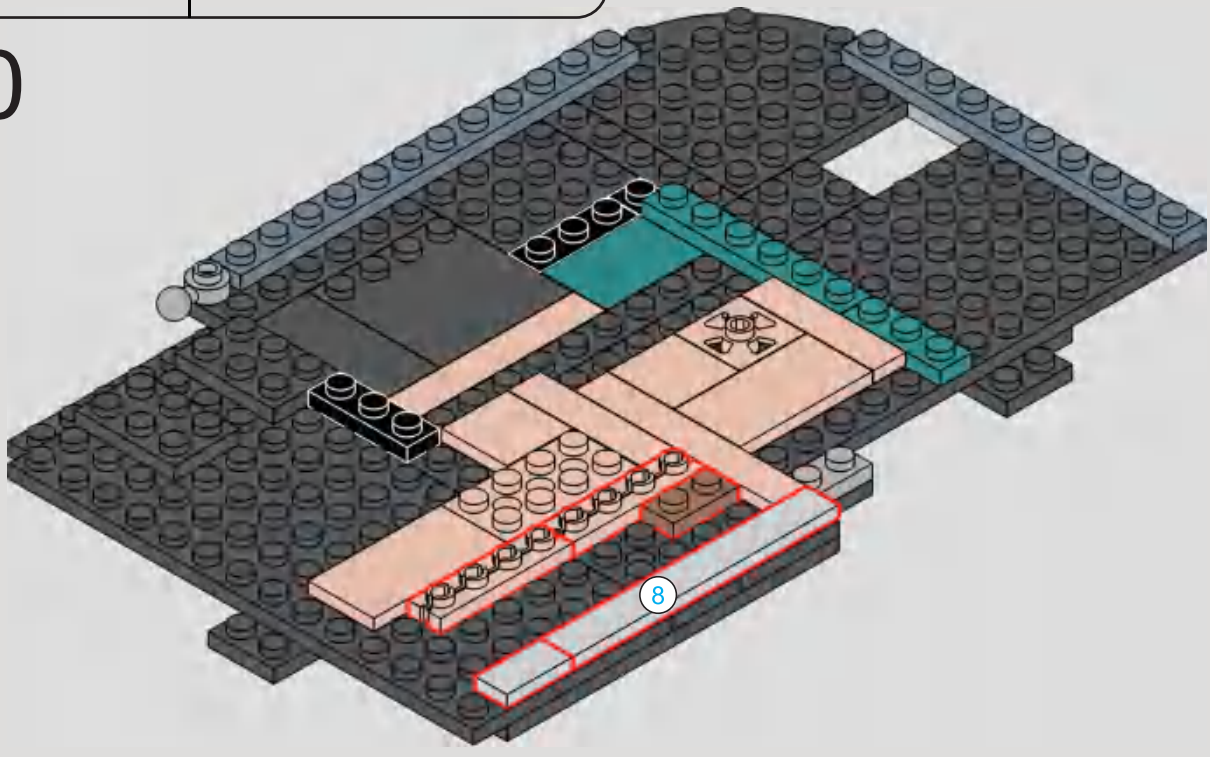

8 1:1

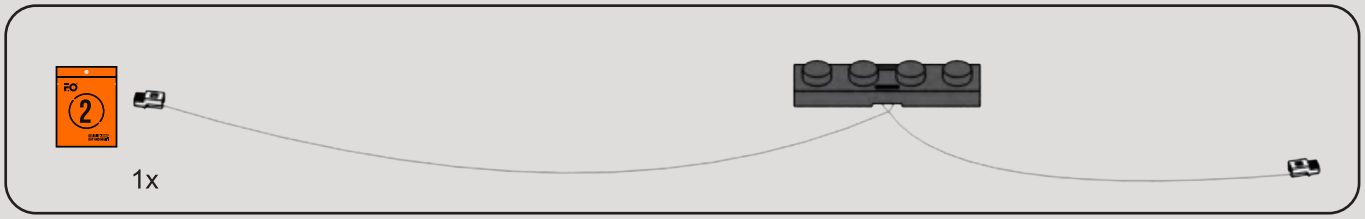

211

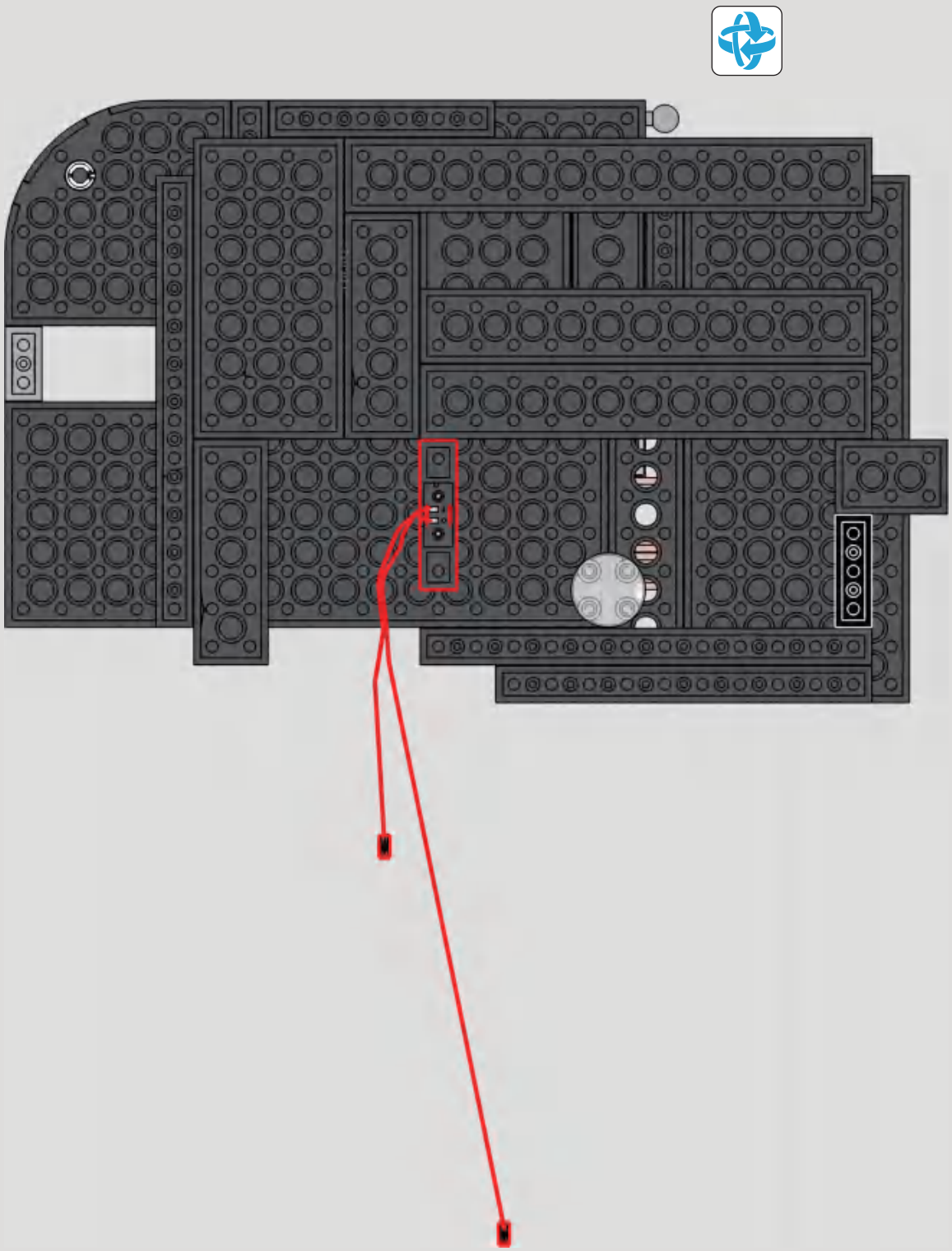

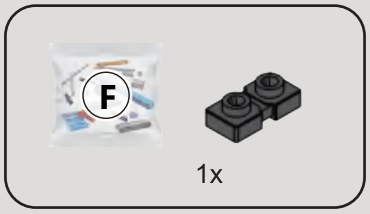

212

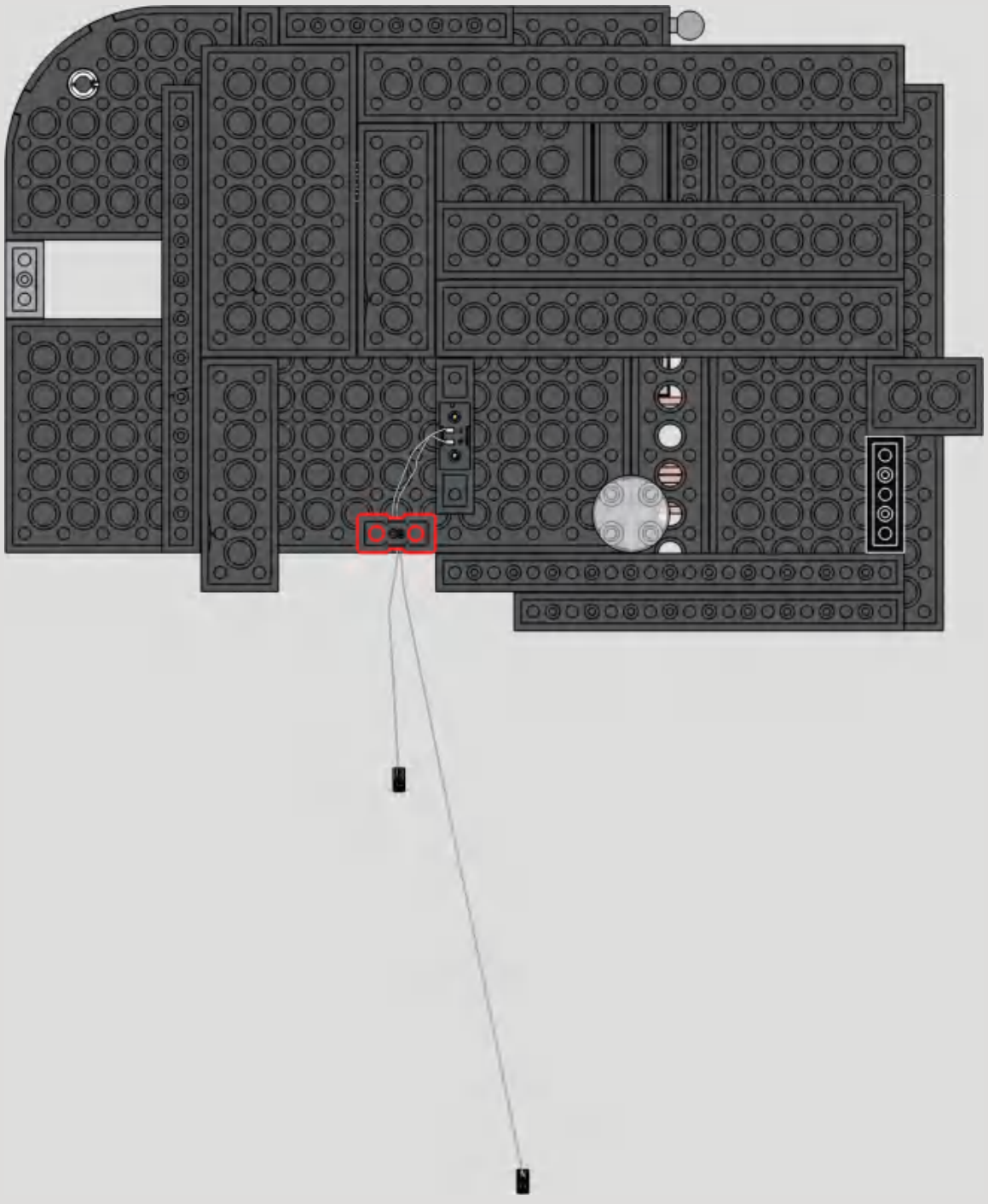

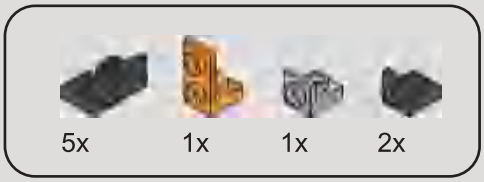

213

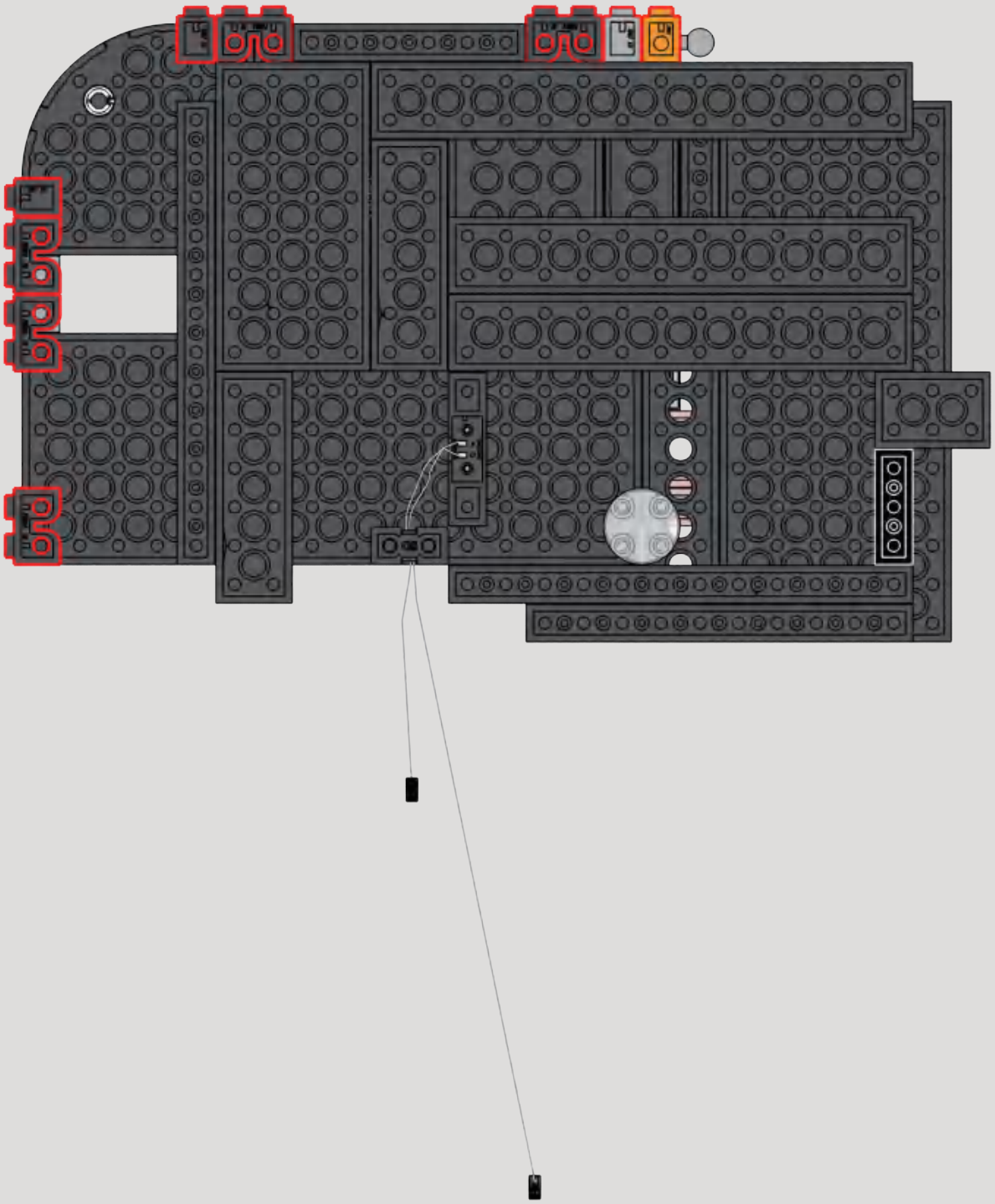

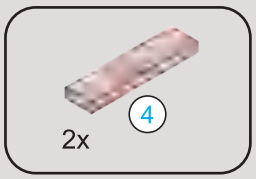

214

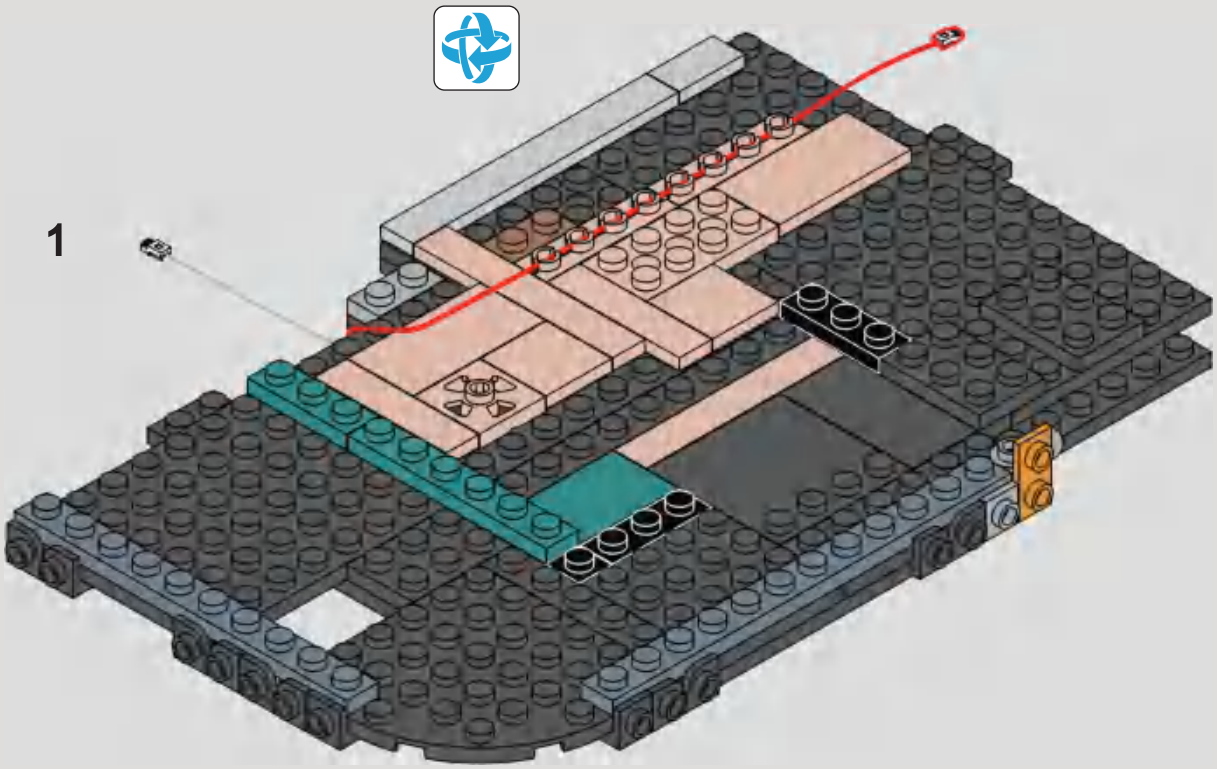

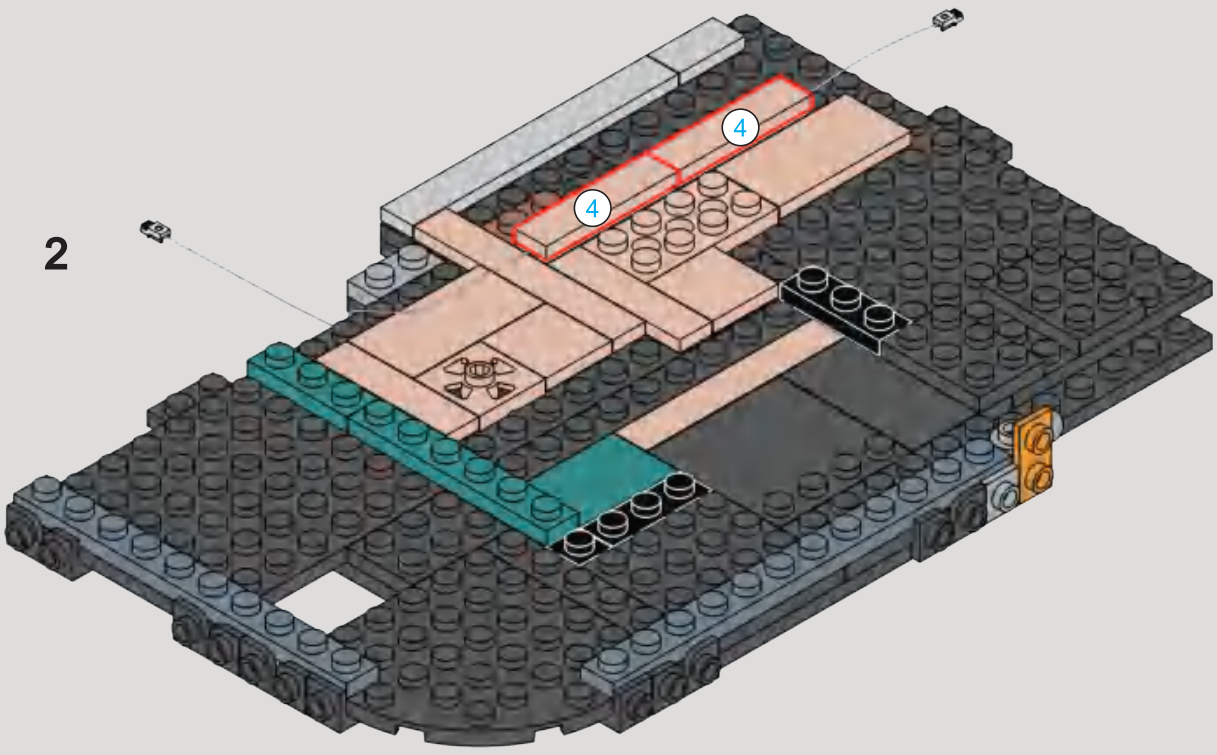

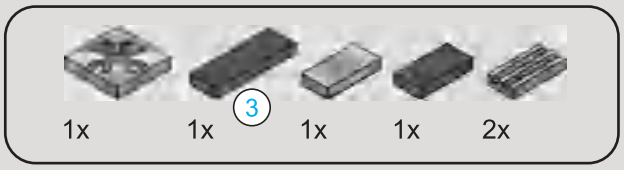

215

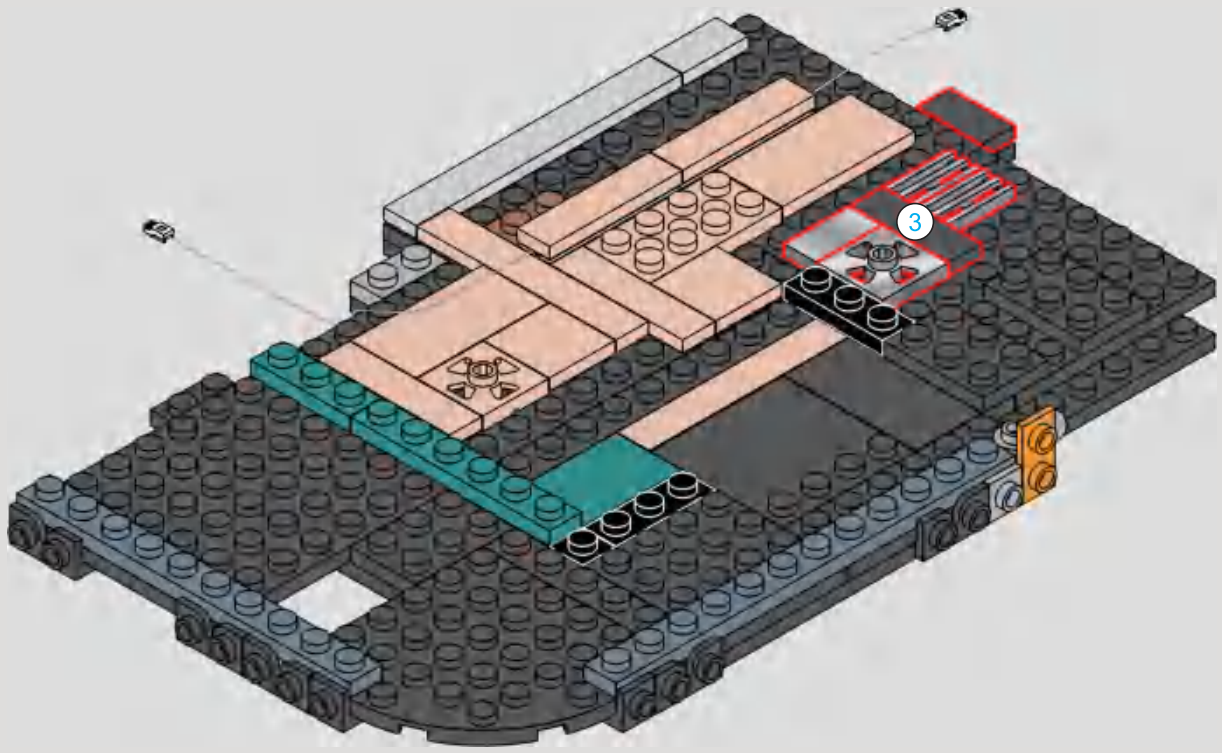

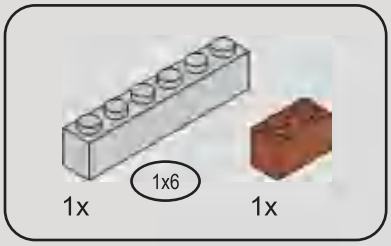

216

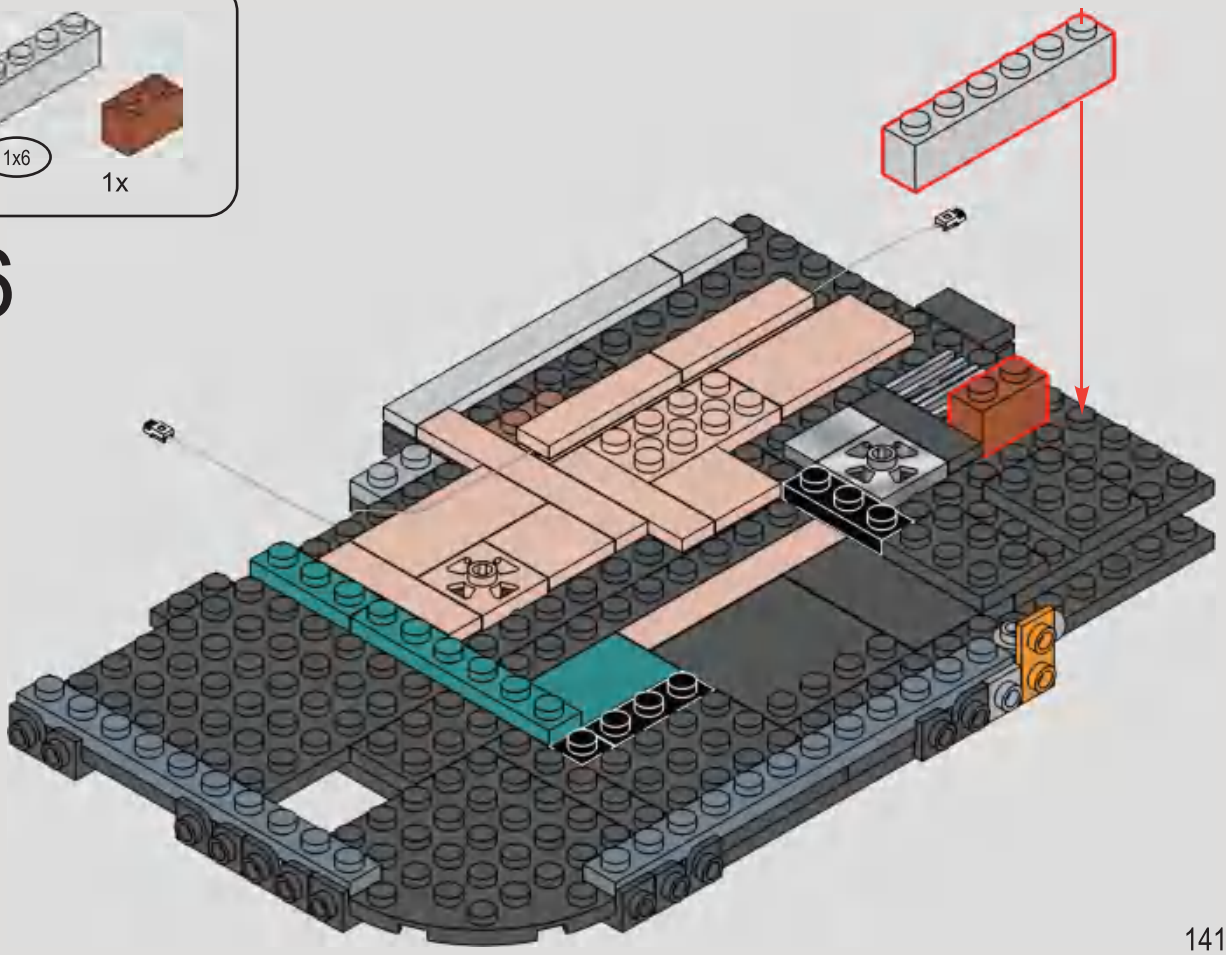

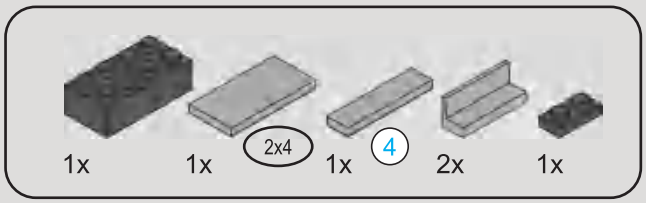

217

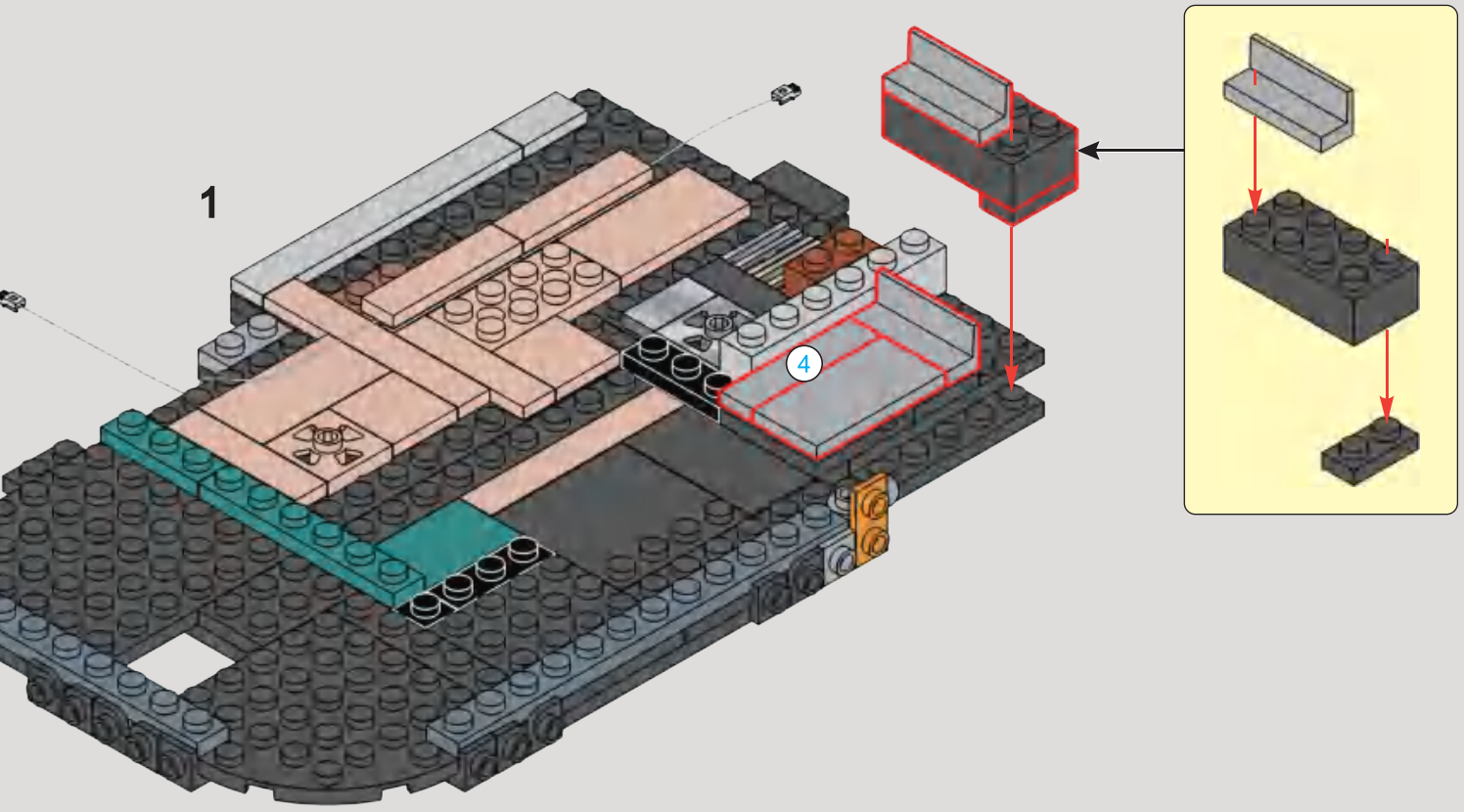

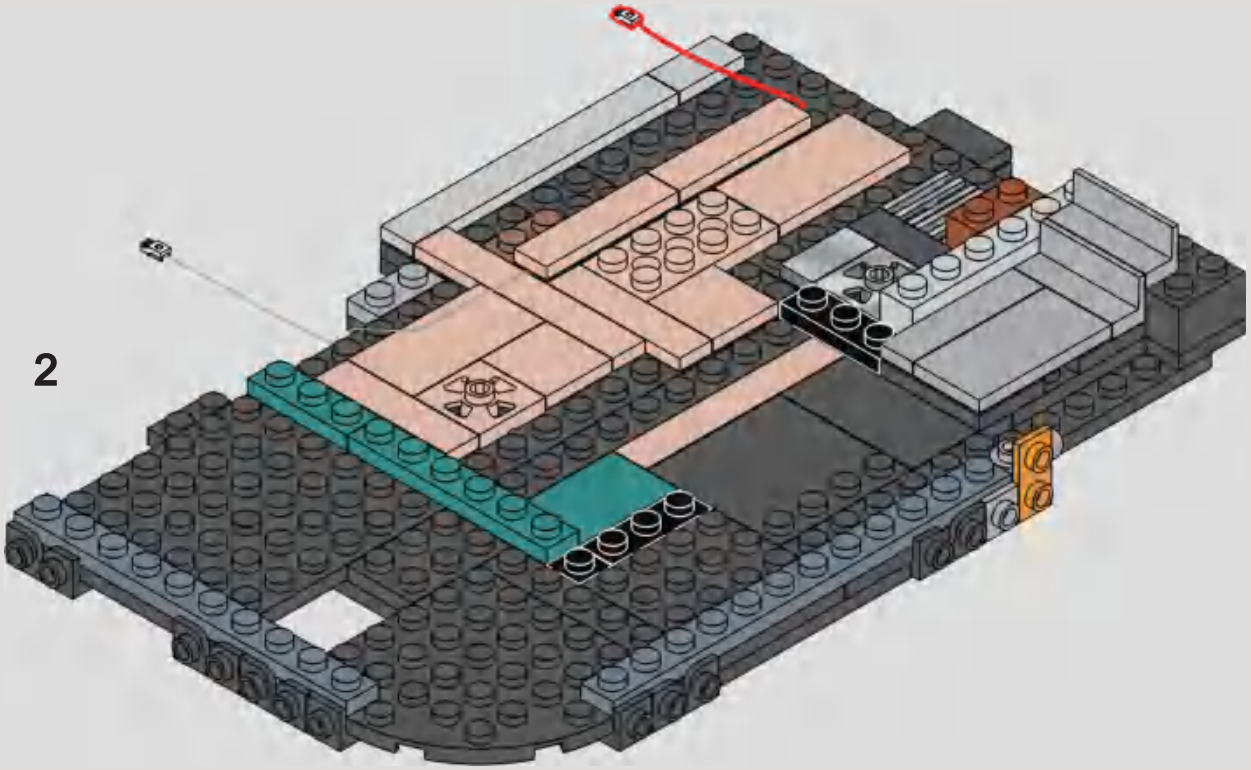

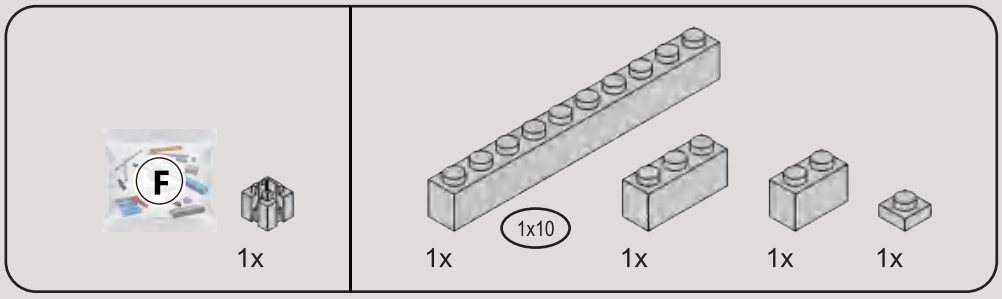

218

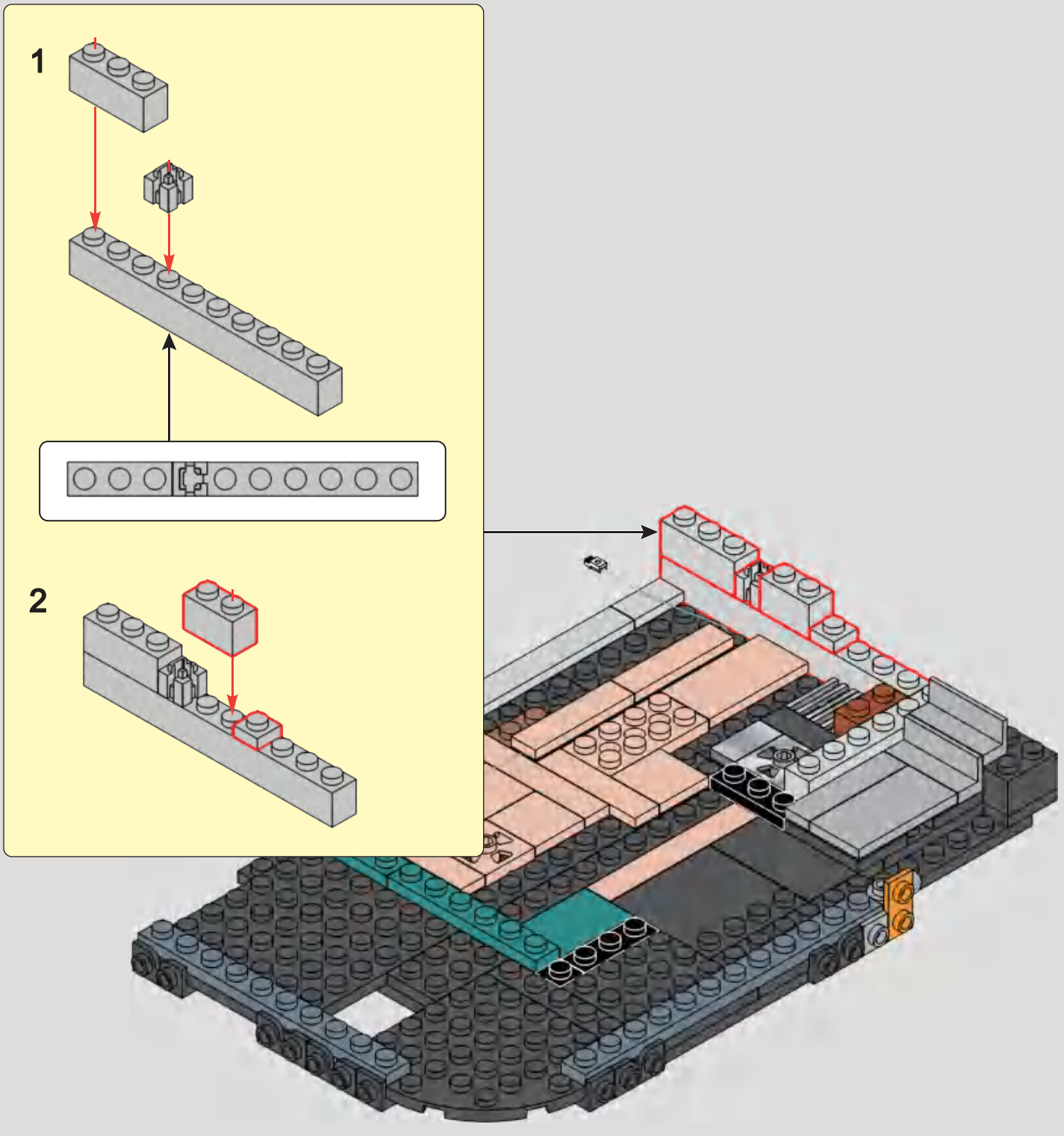

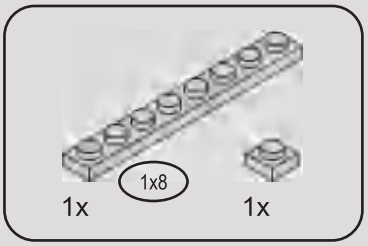

219

1

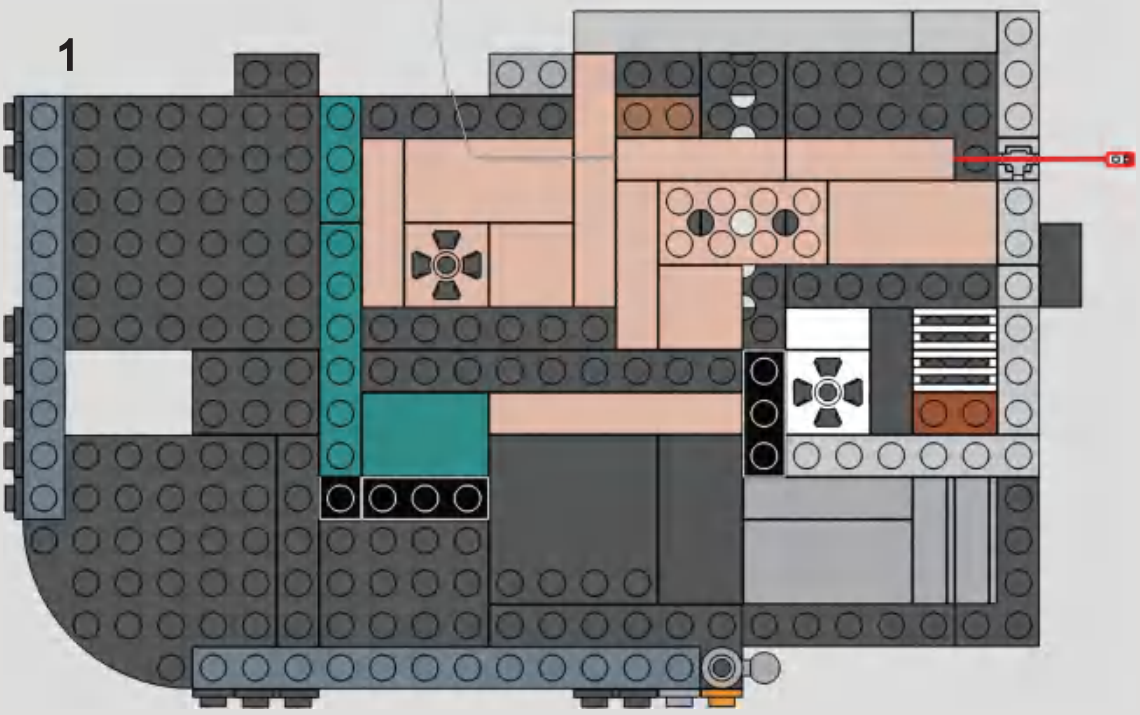

2

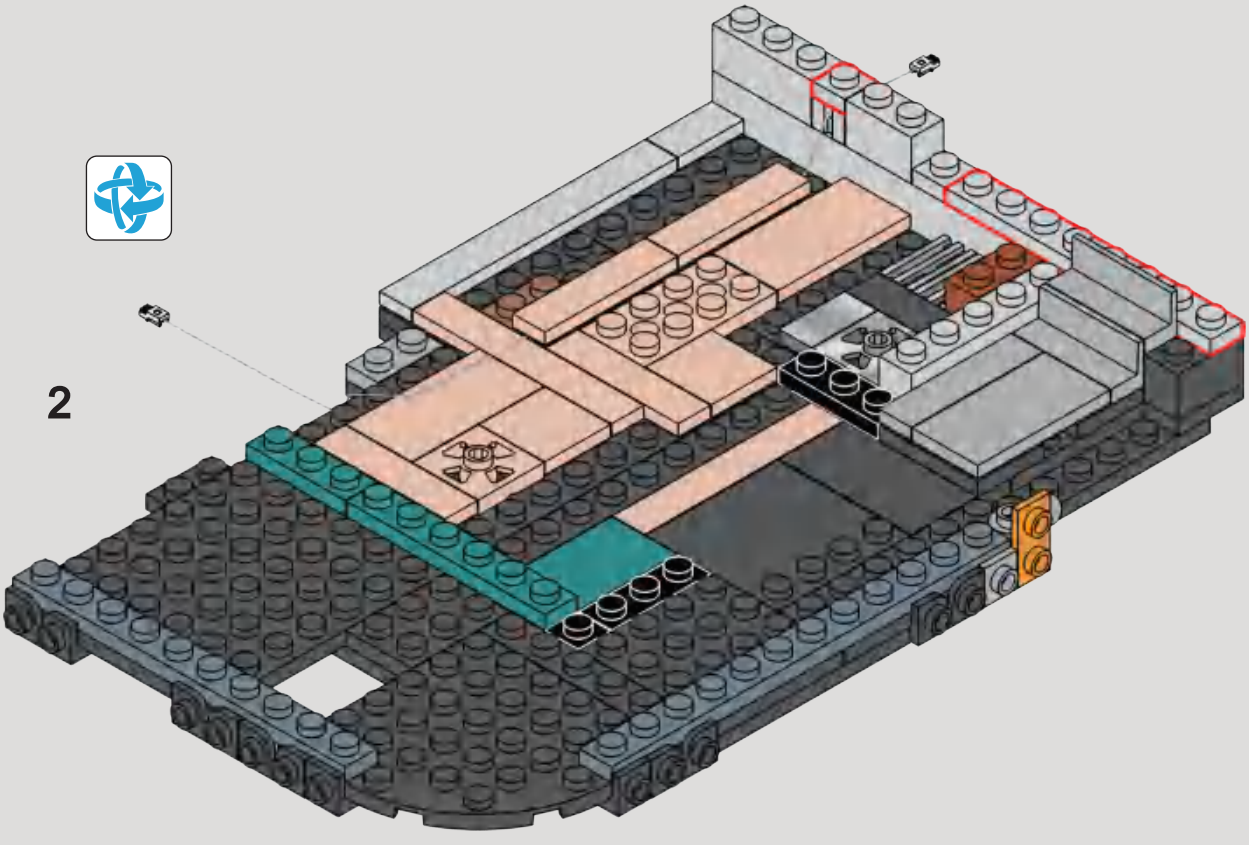

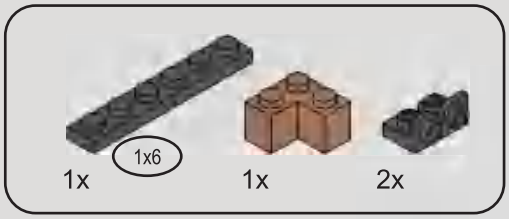

220

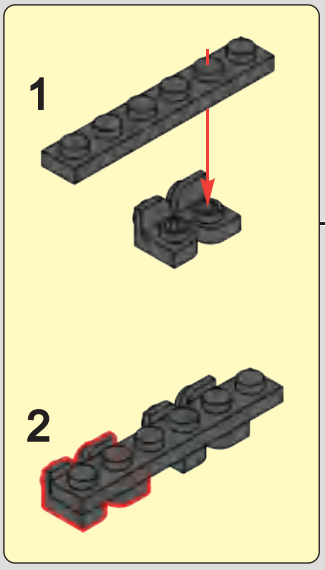

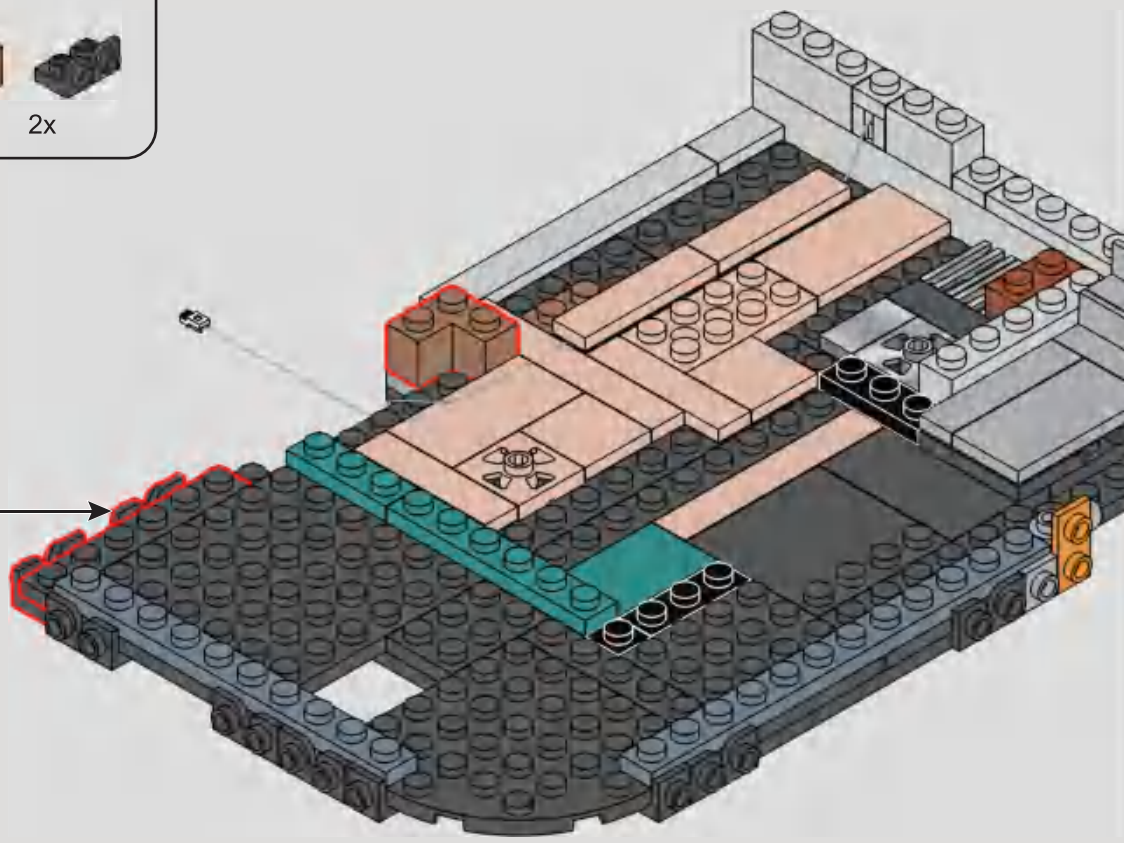

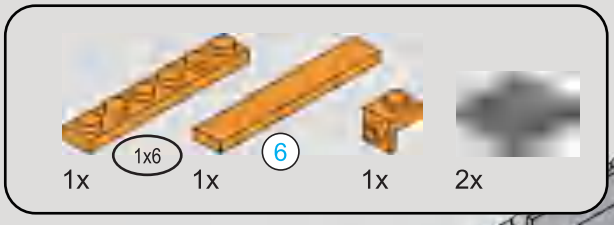

221

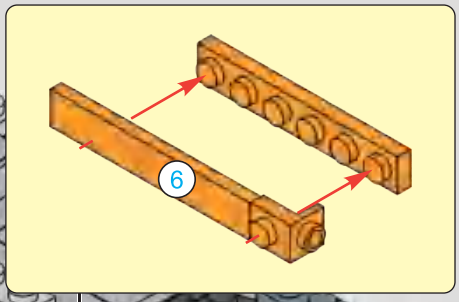

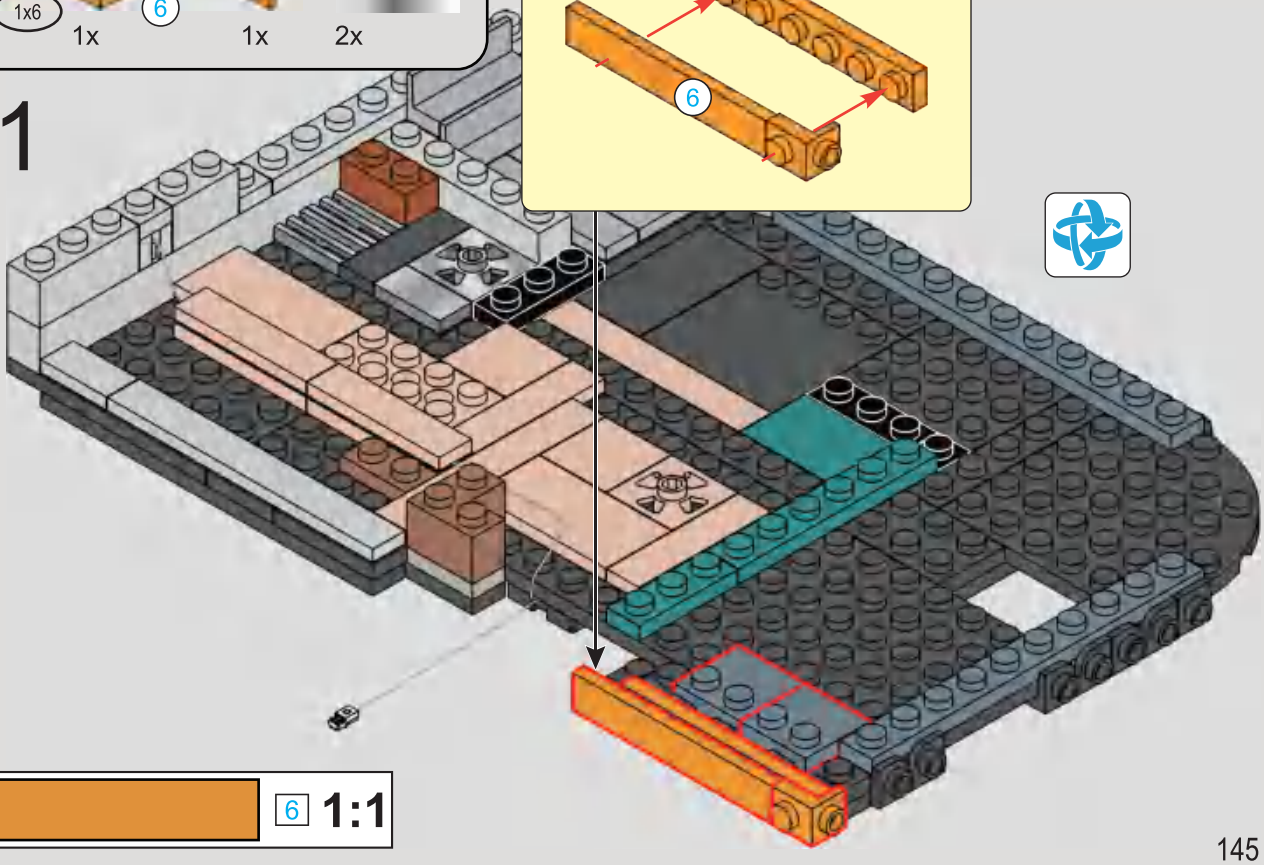

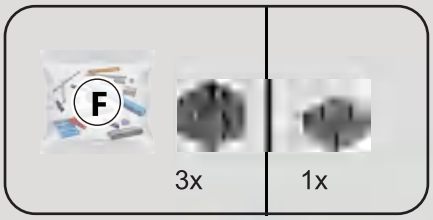

222

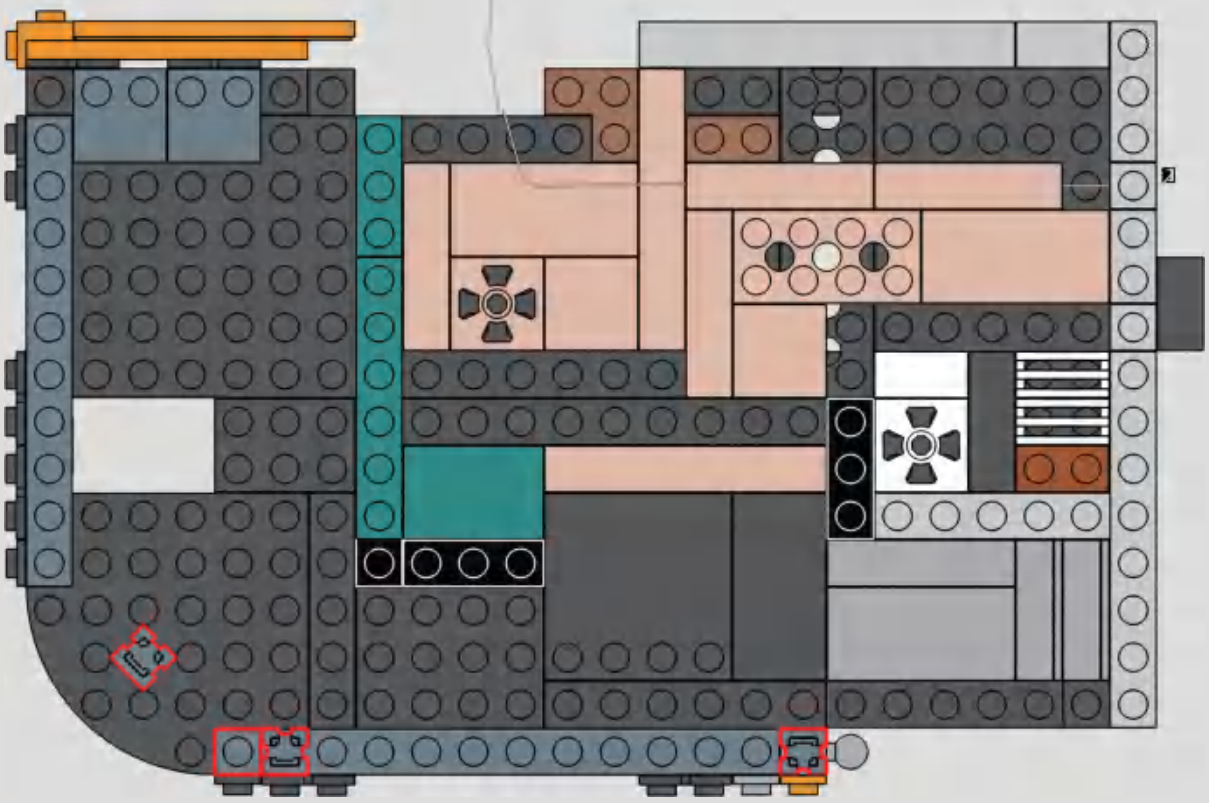

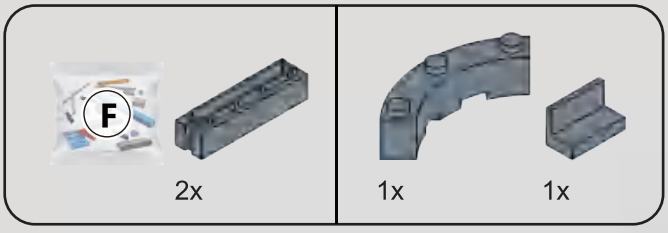

223

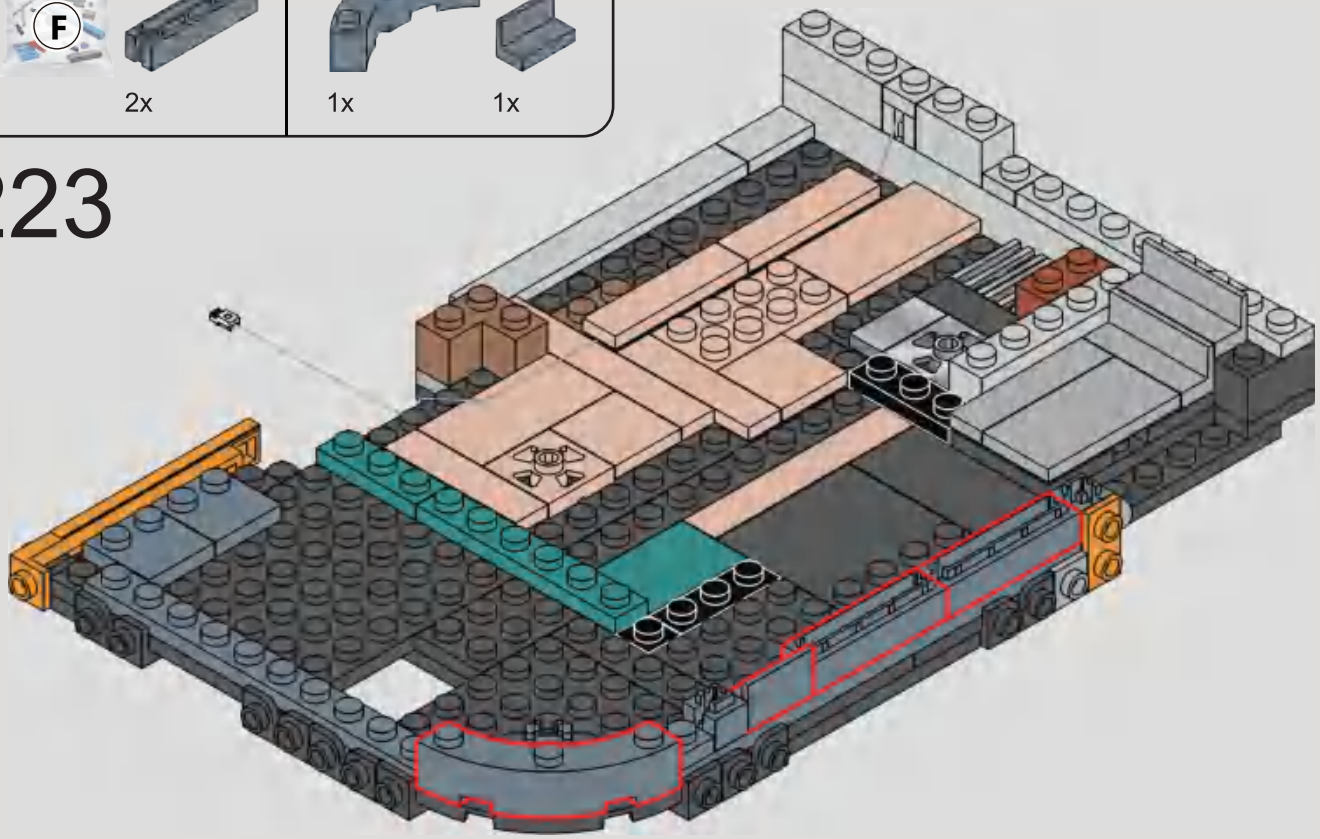

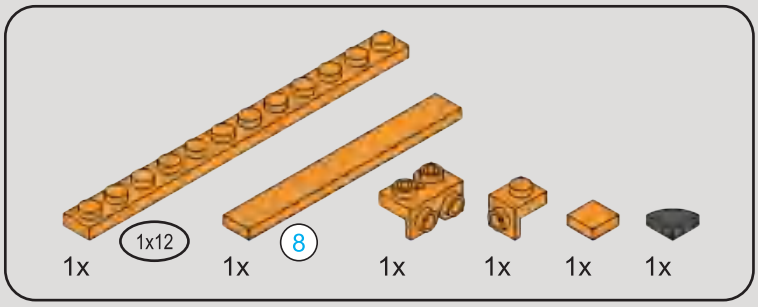

224

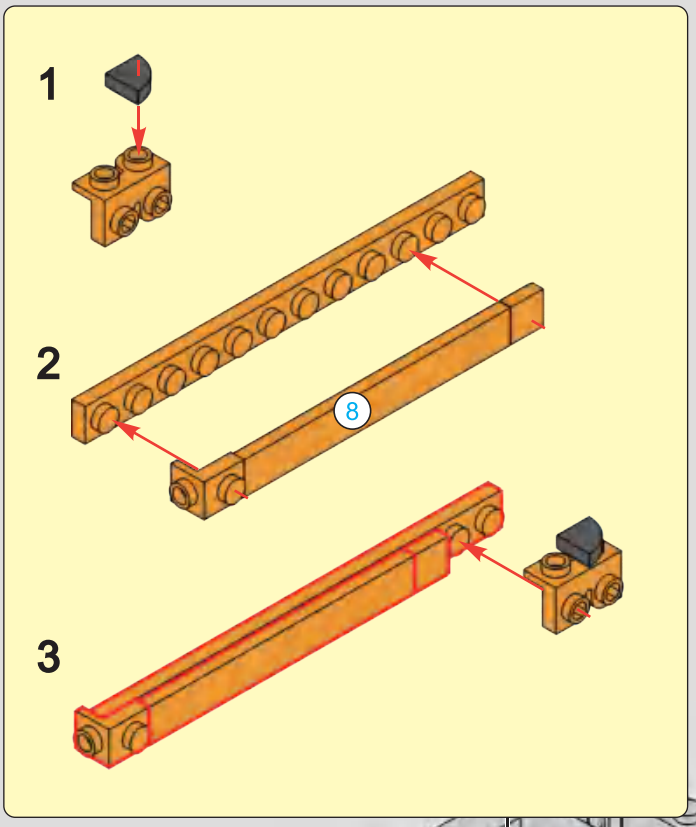

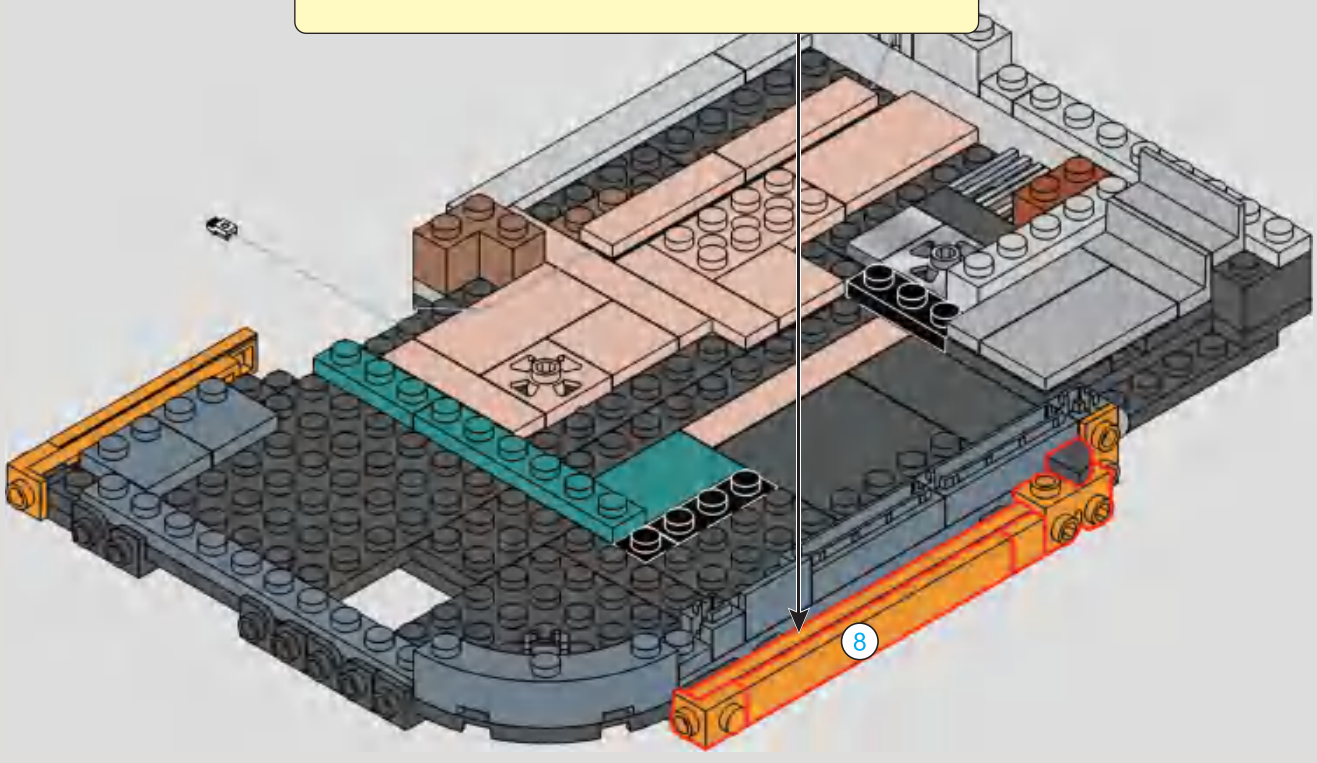

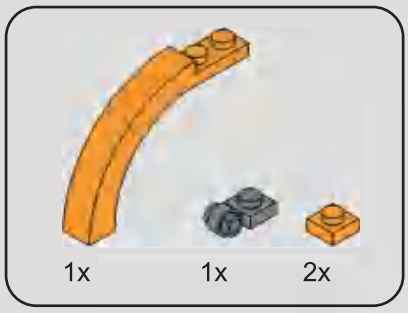

225

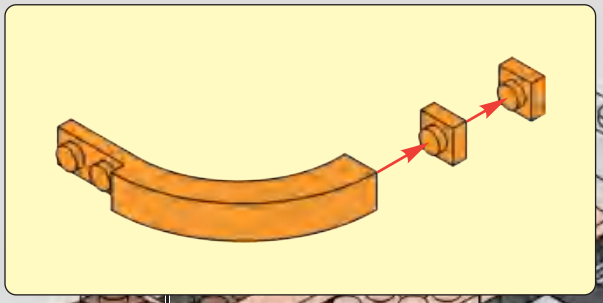

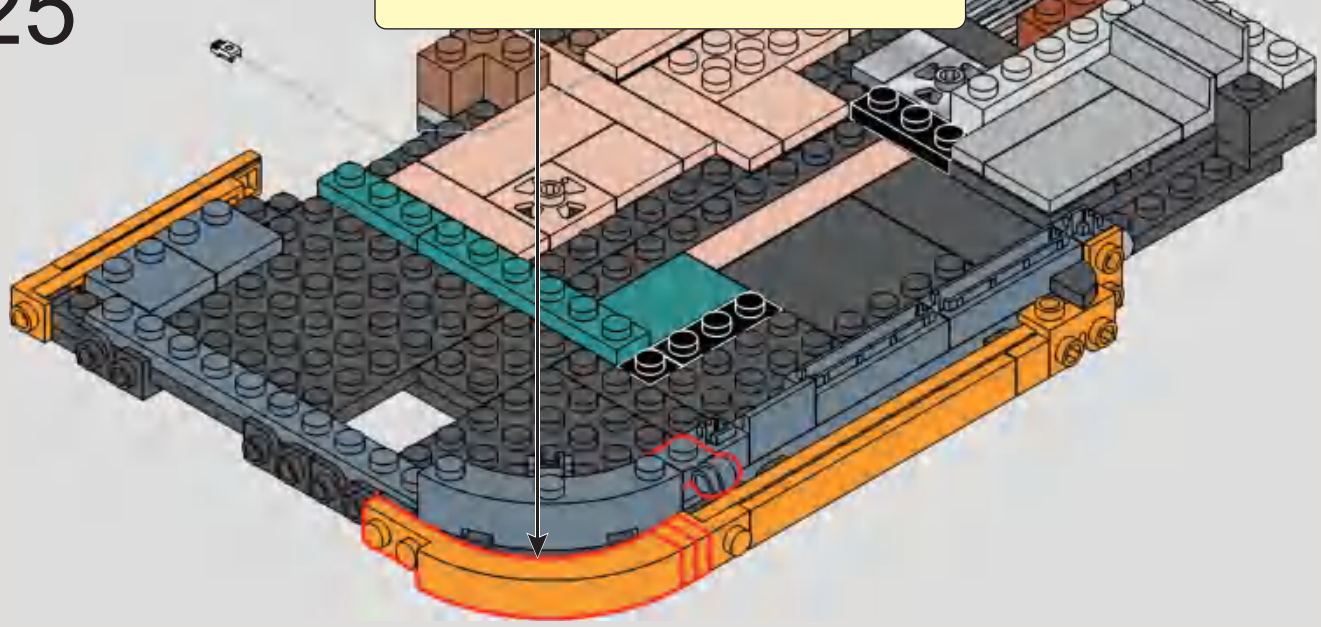

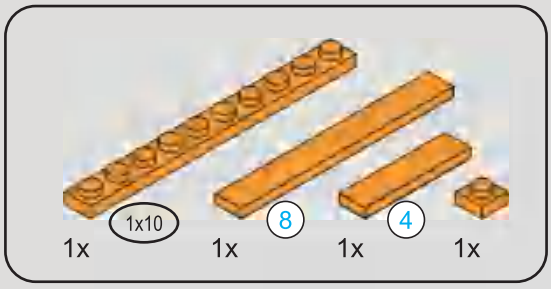

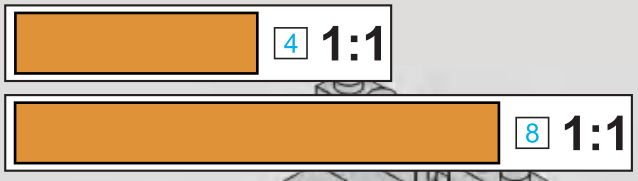

226

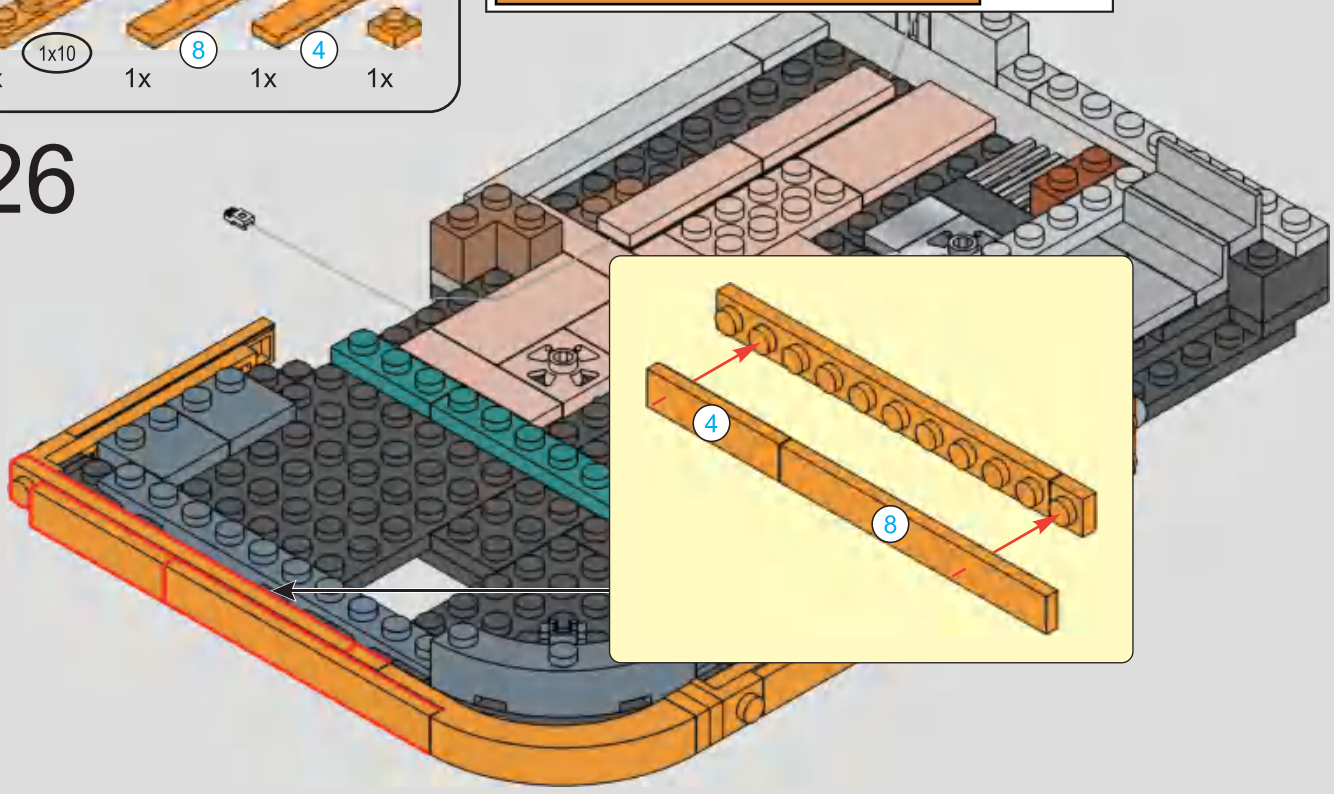

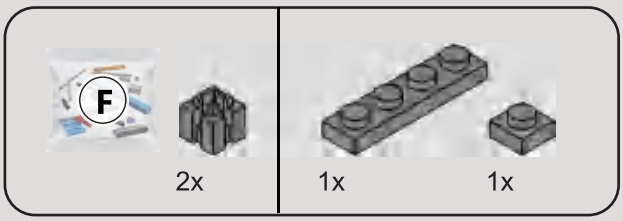

227

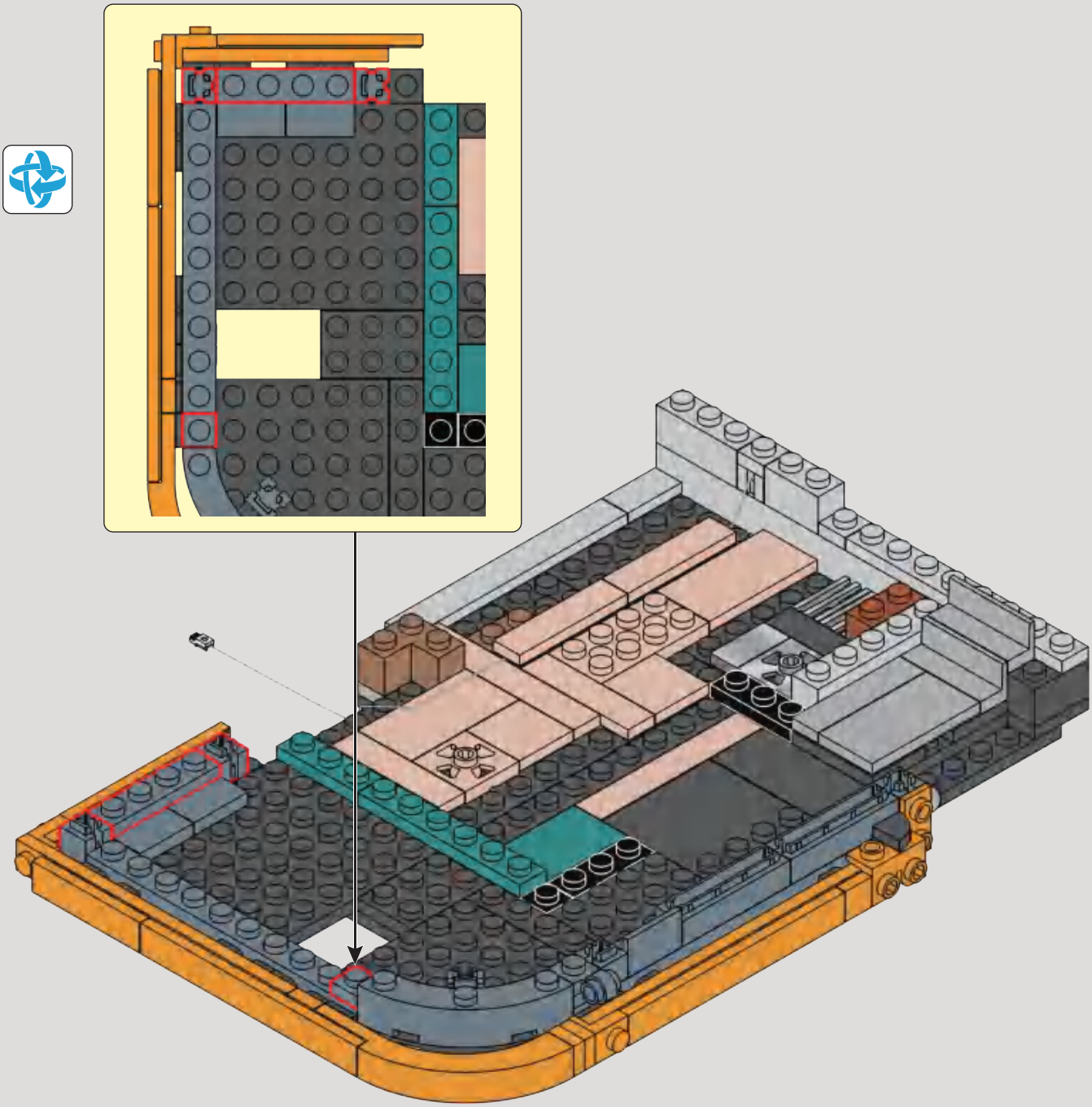

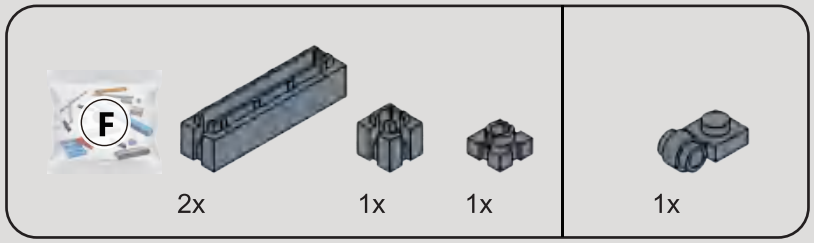

228

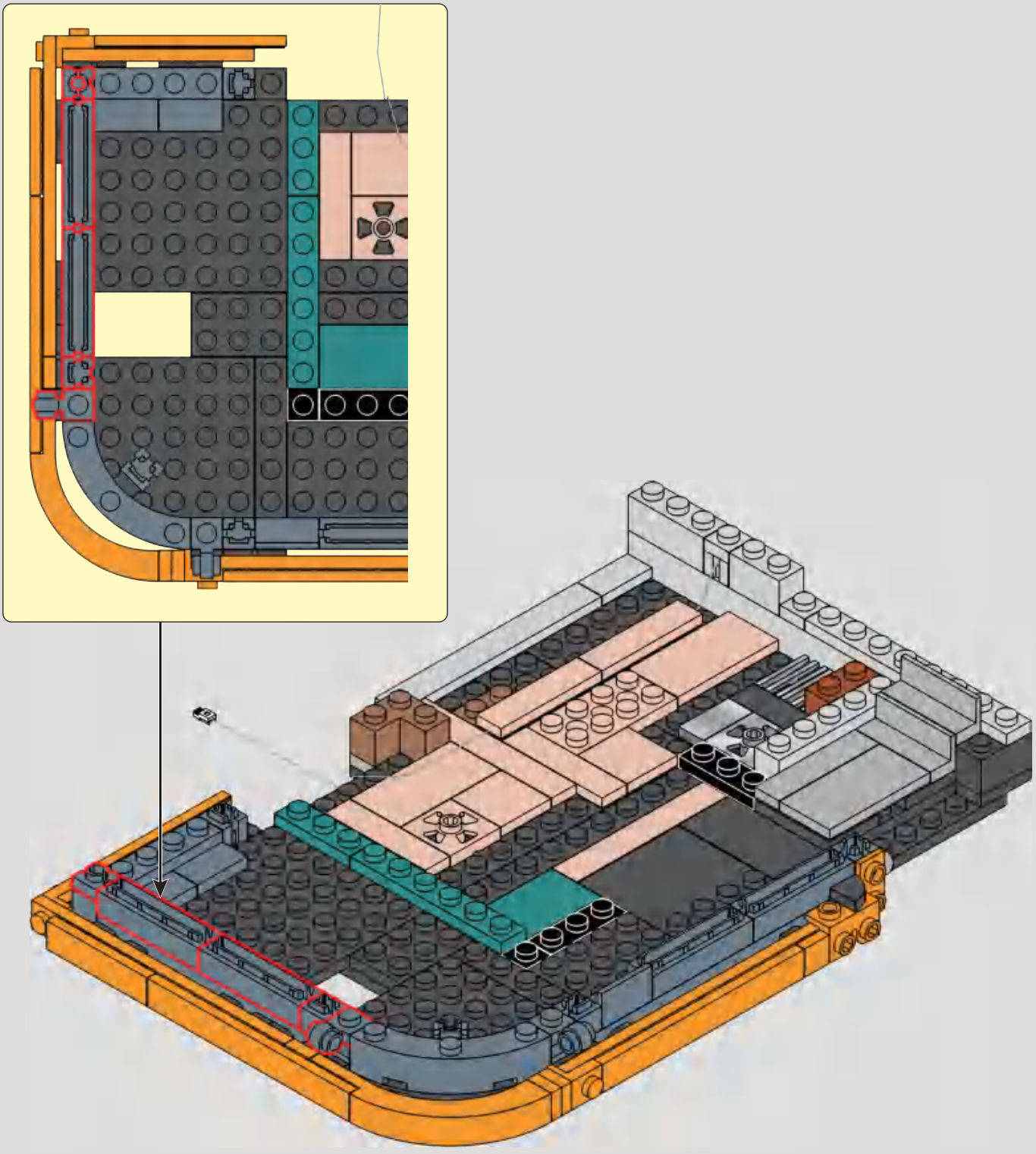

229

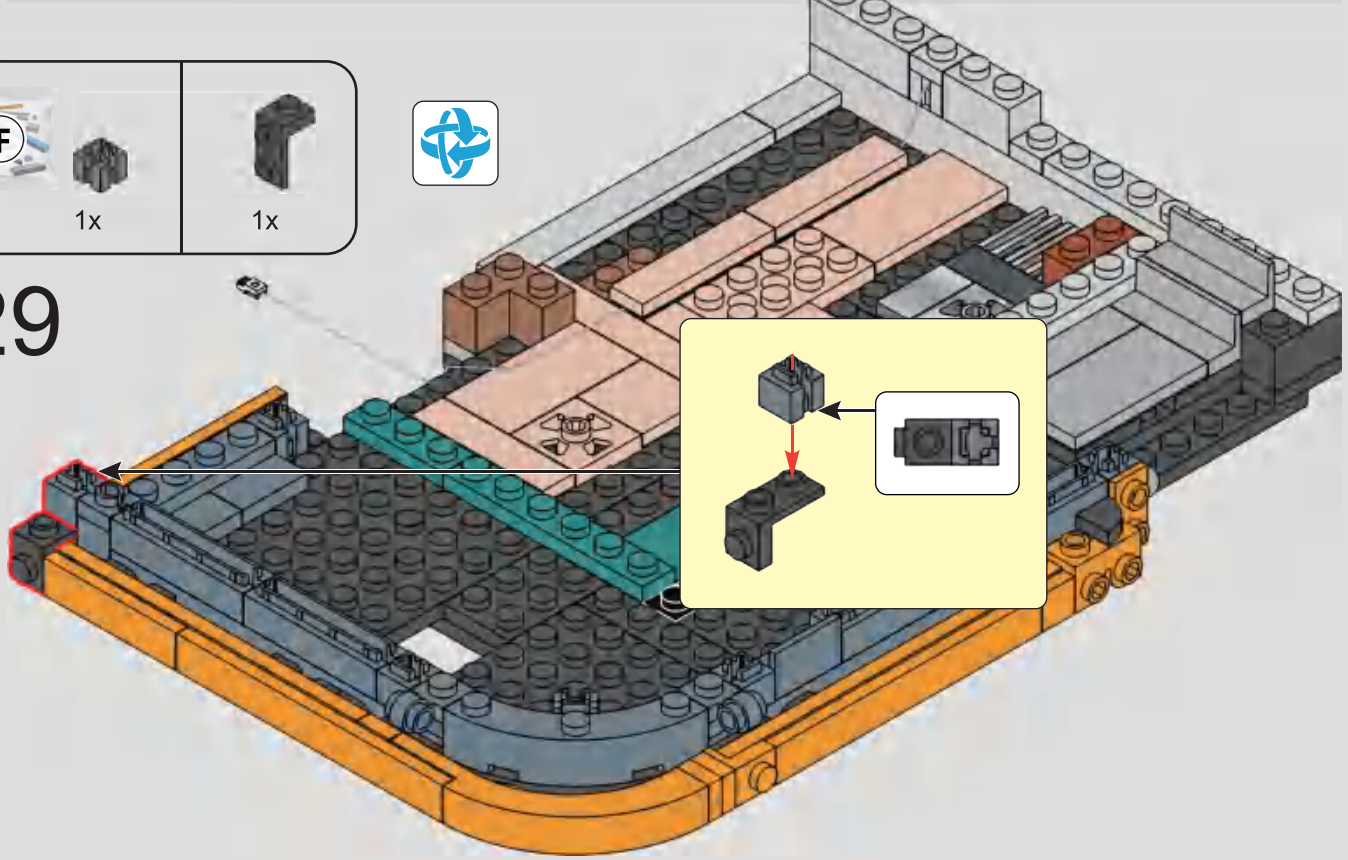

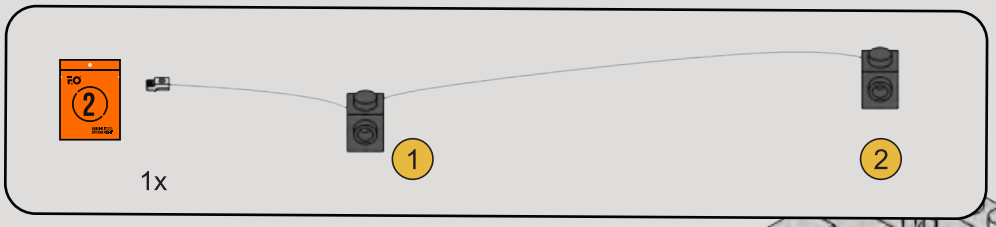

230

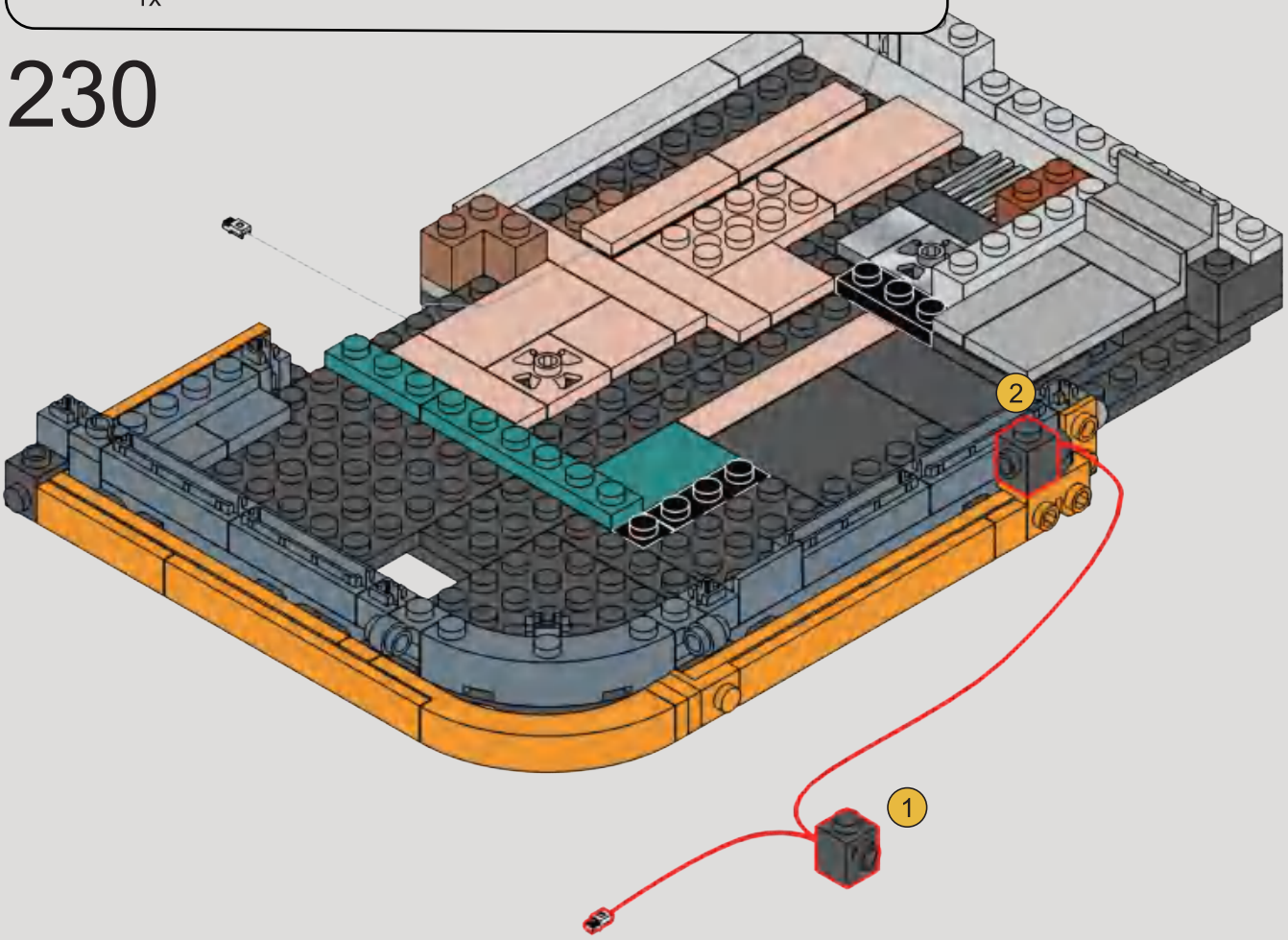

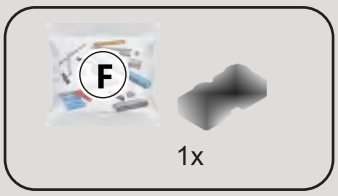

231

1

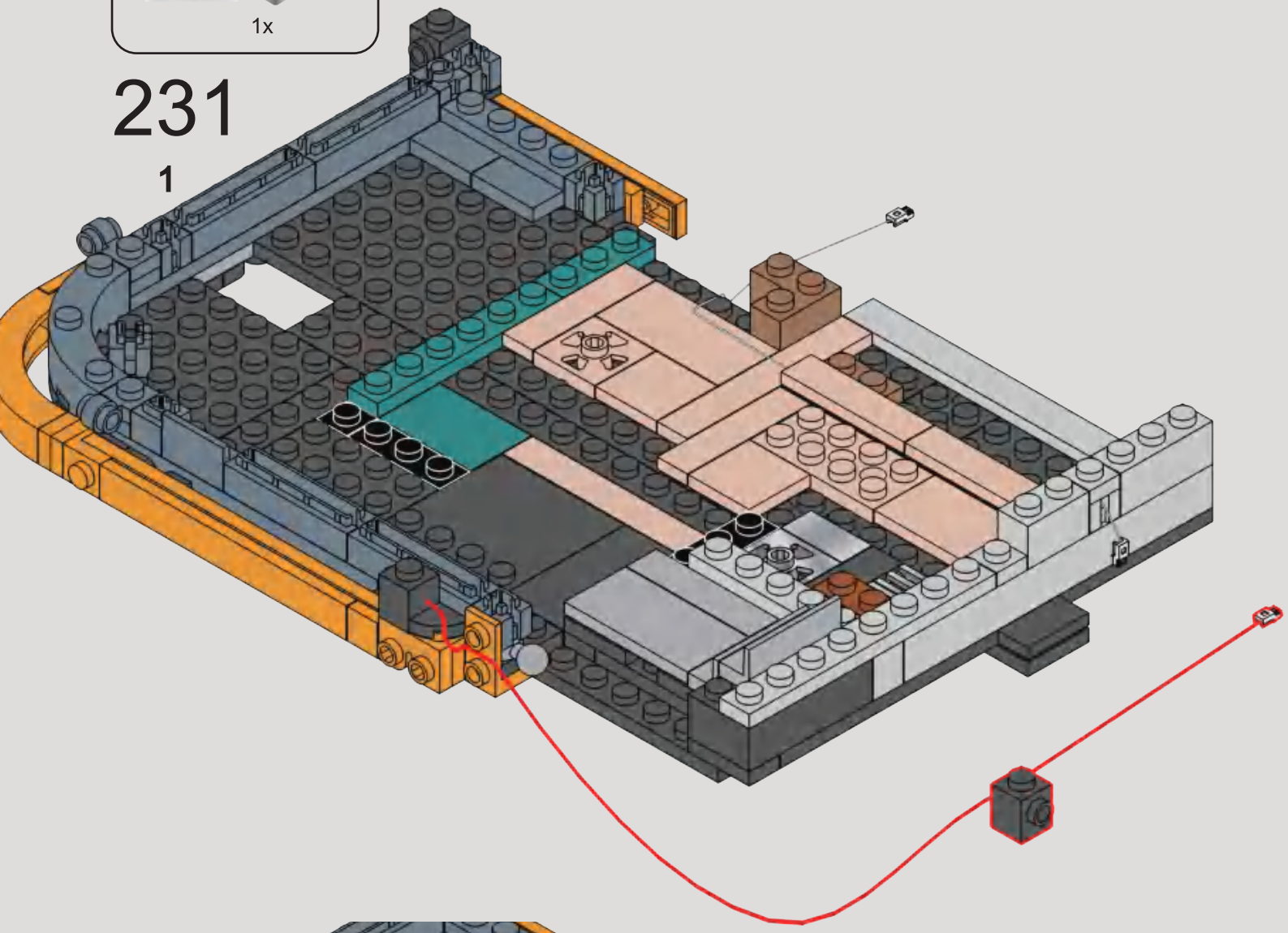

2

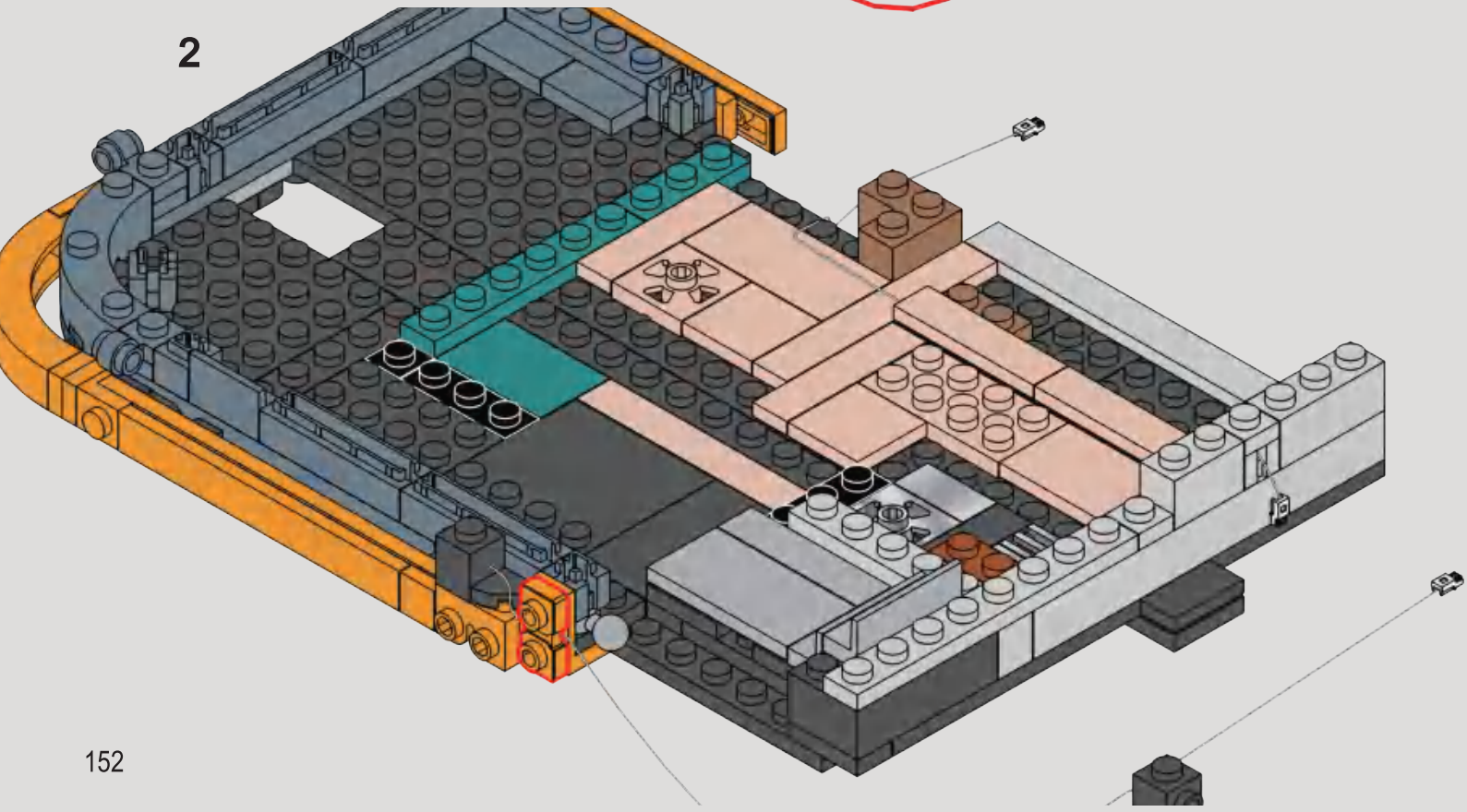

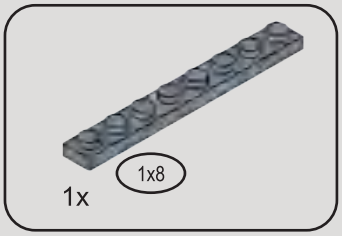

232

1

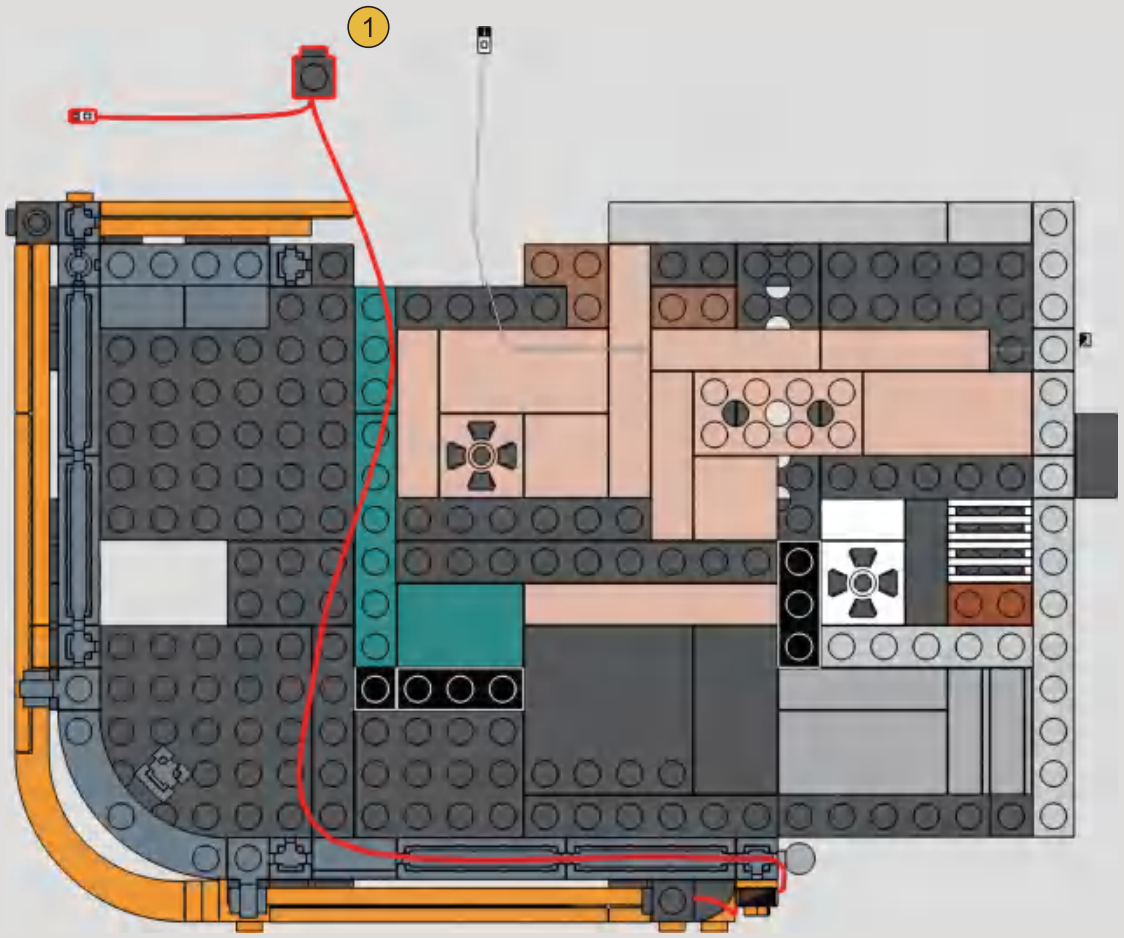

2

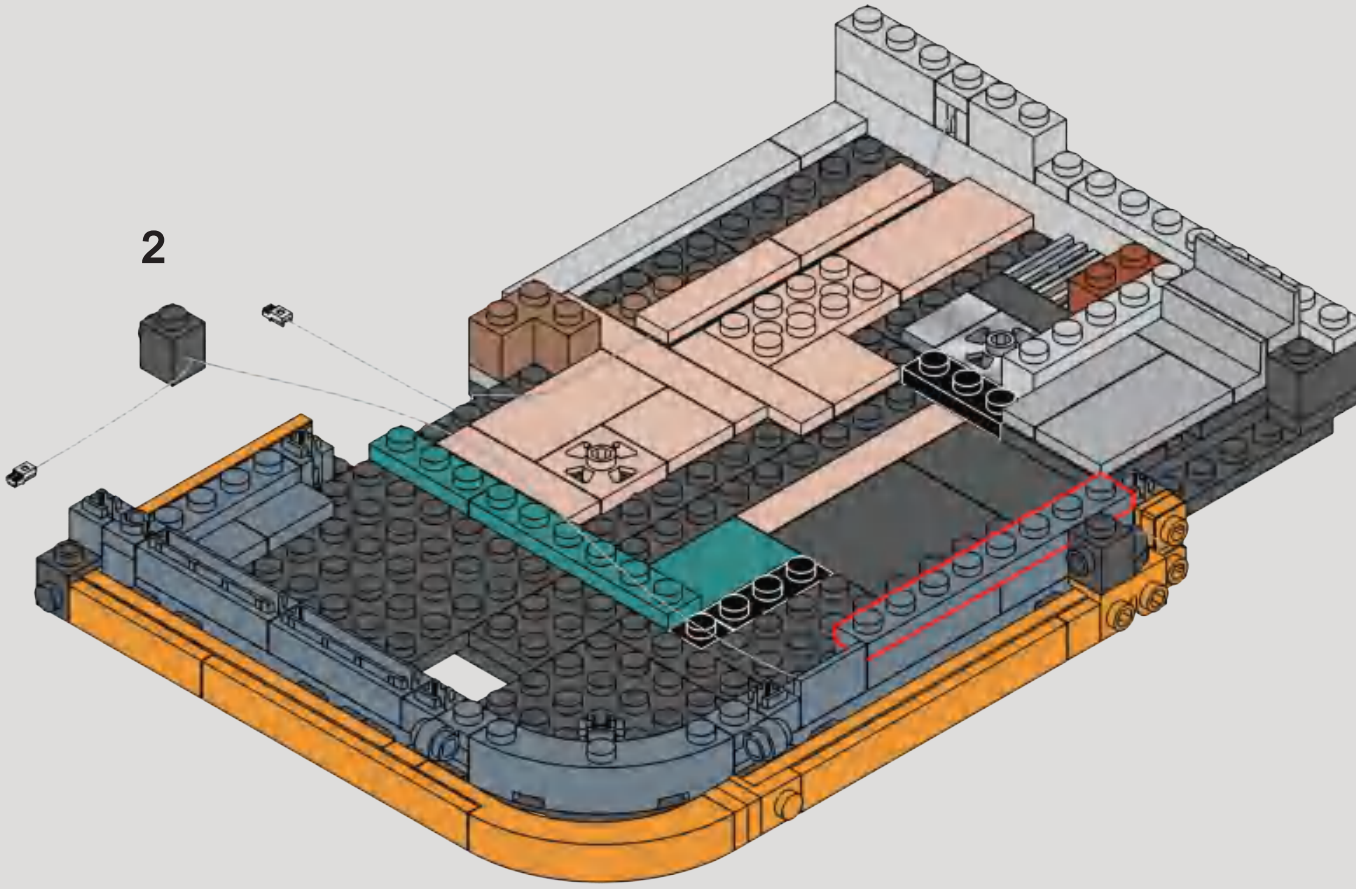

233

1

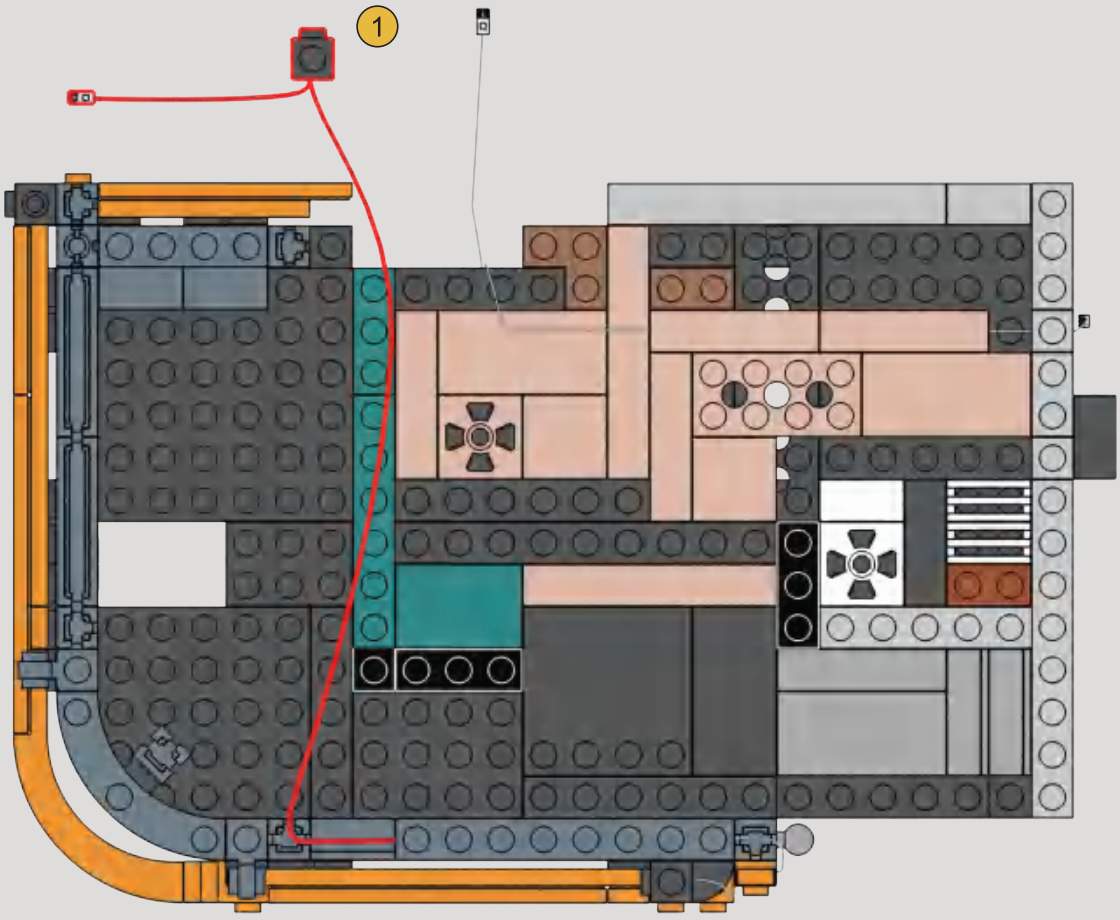

2

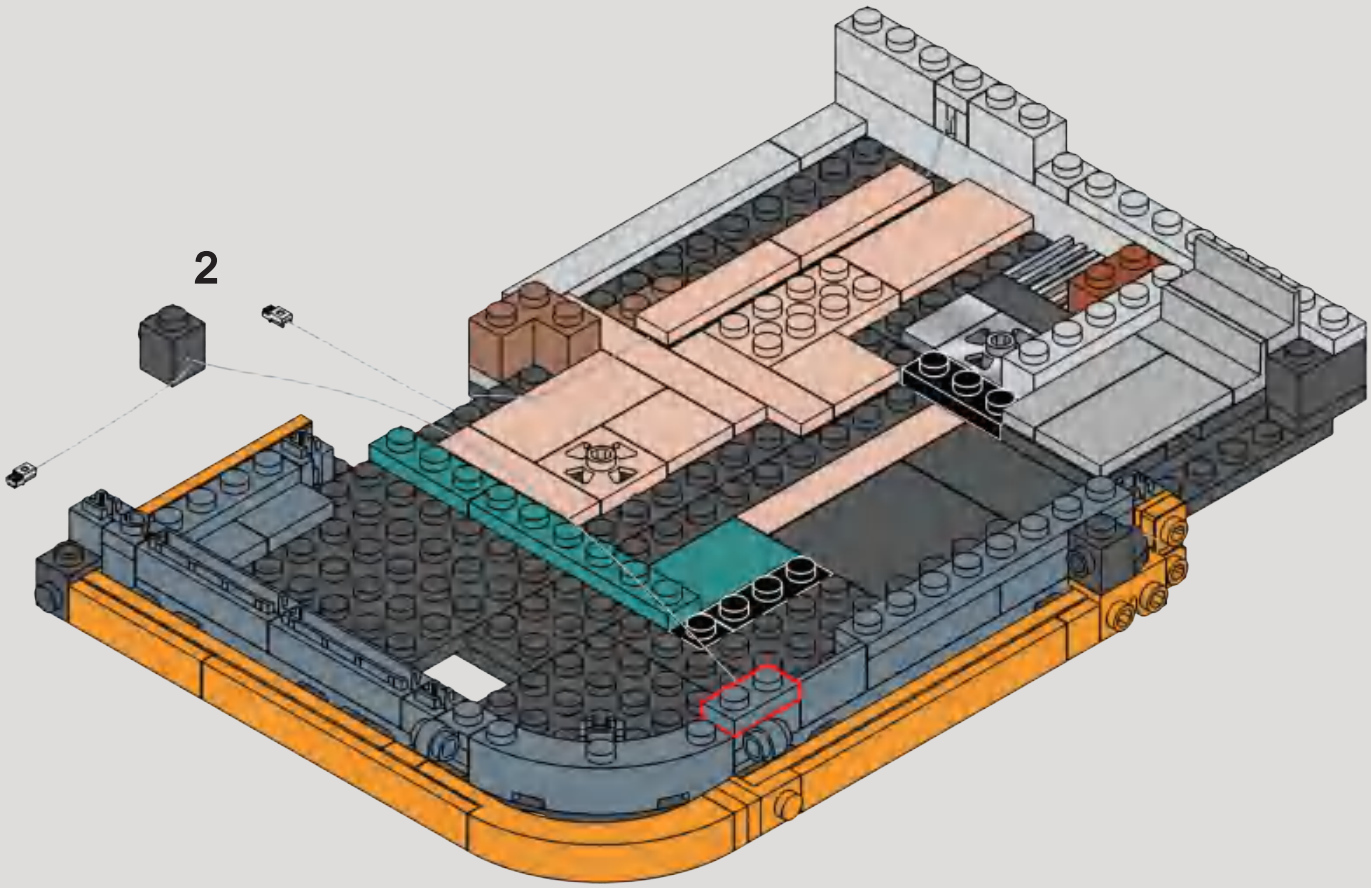

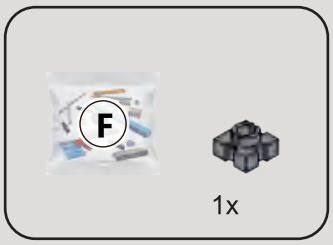

234

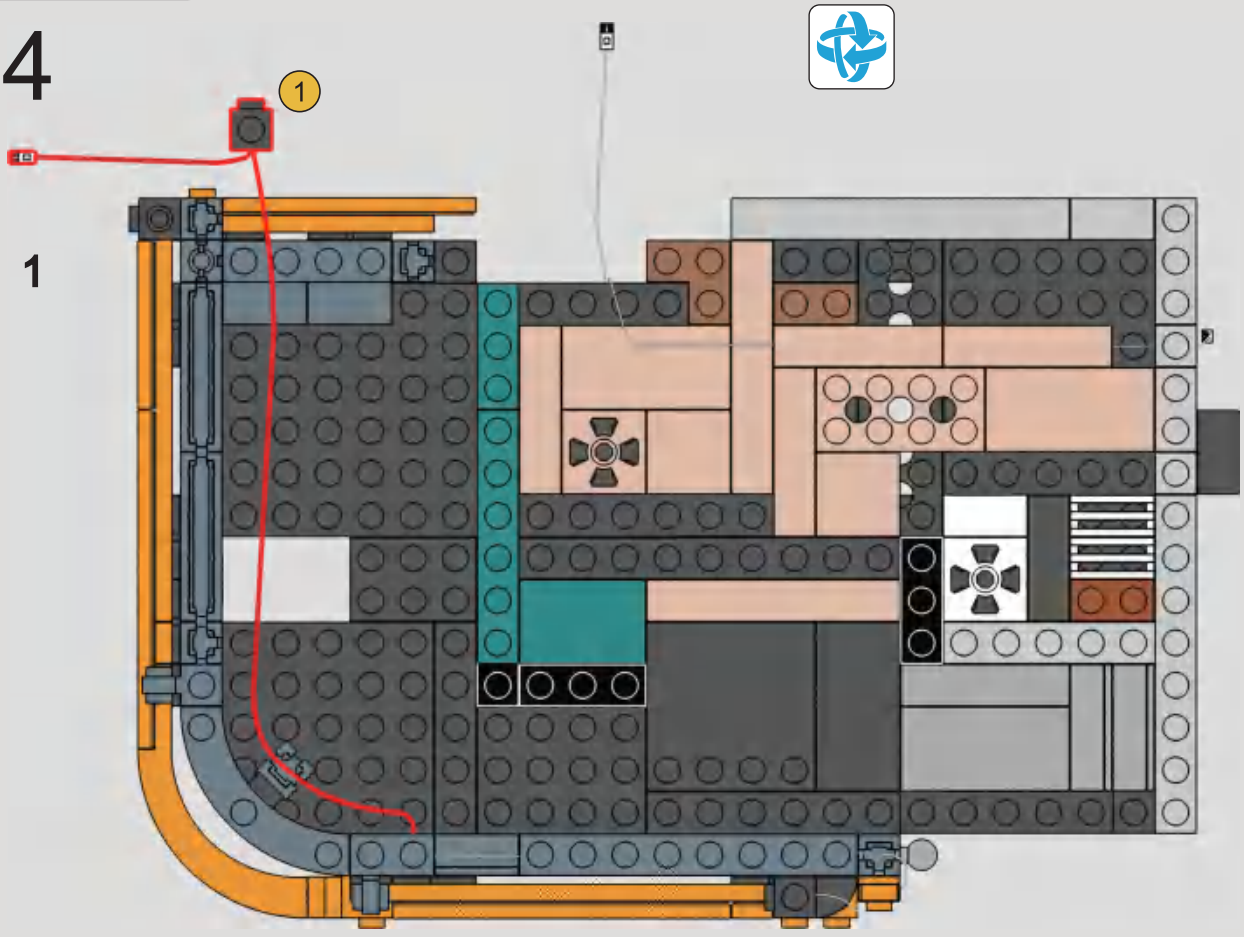

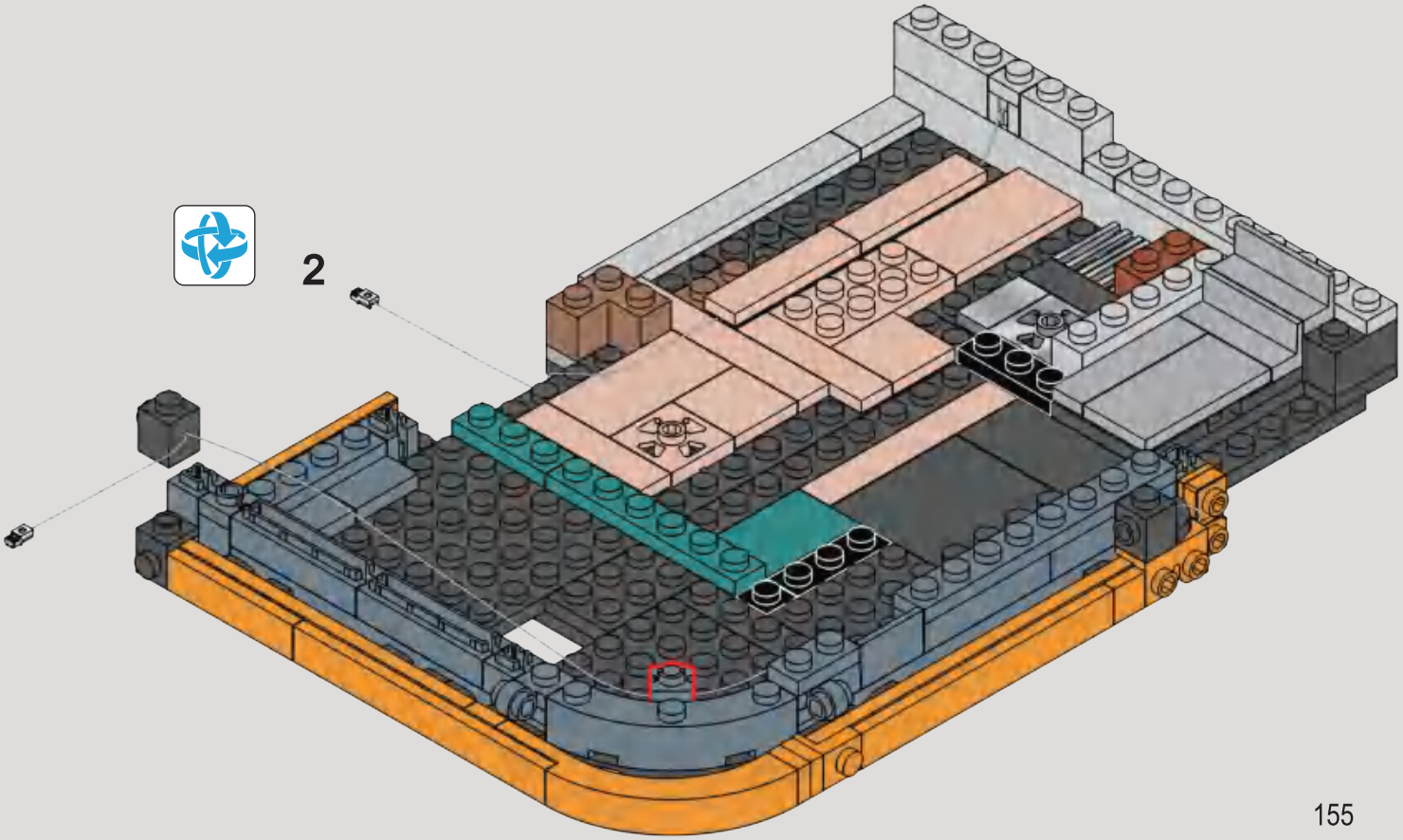

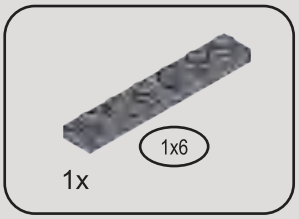

235

1

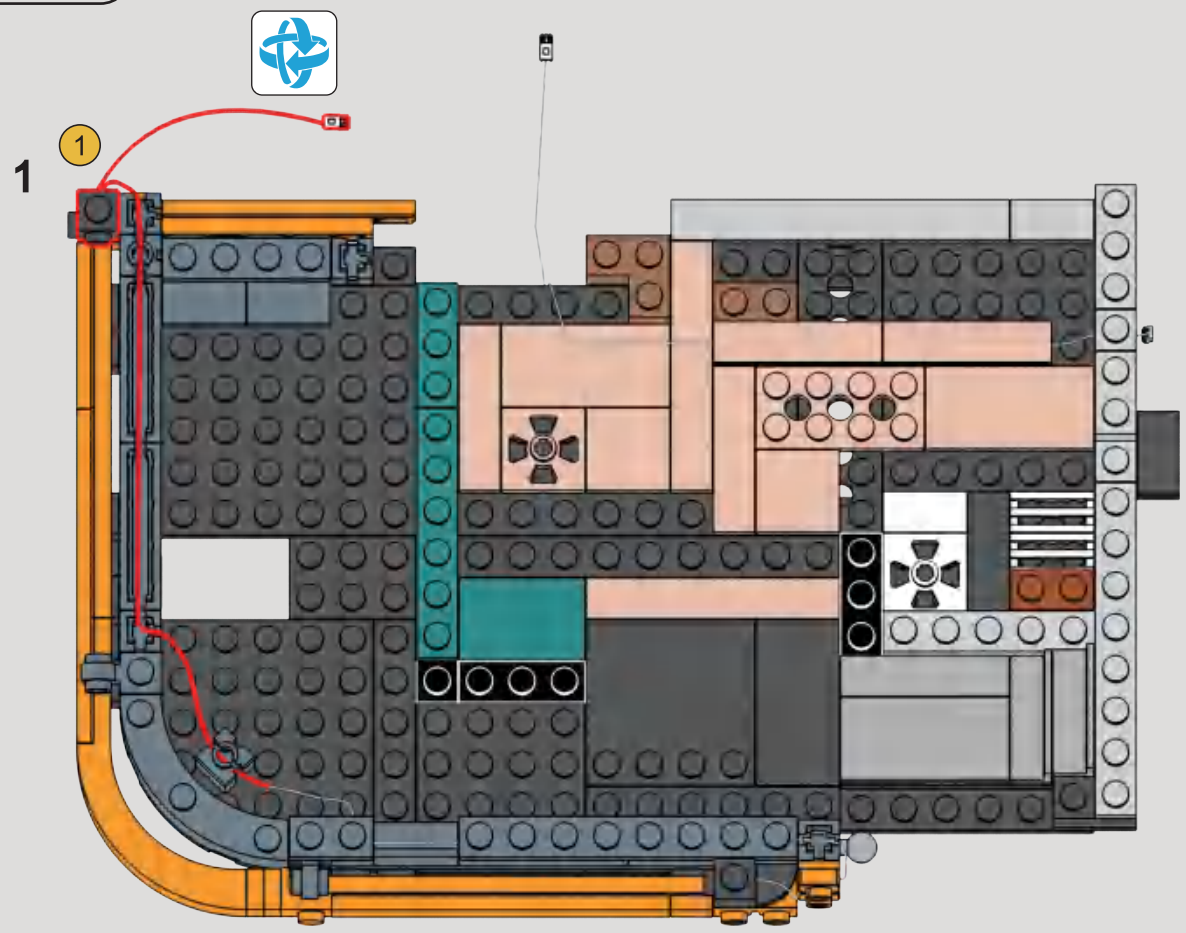

2

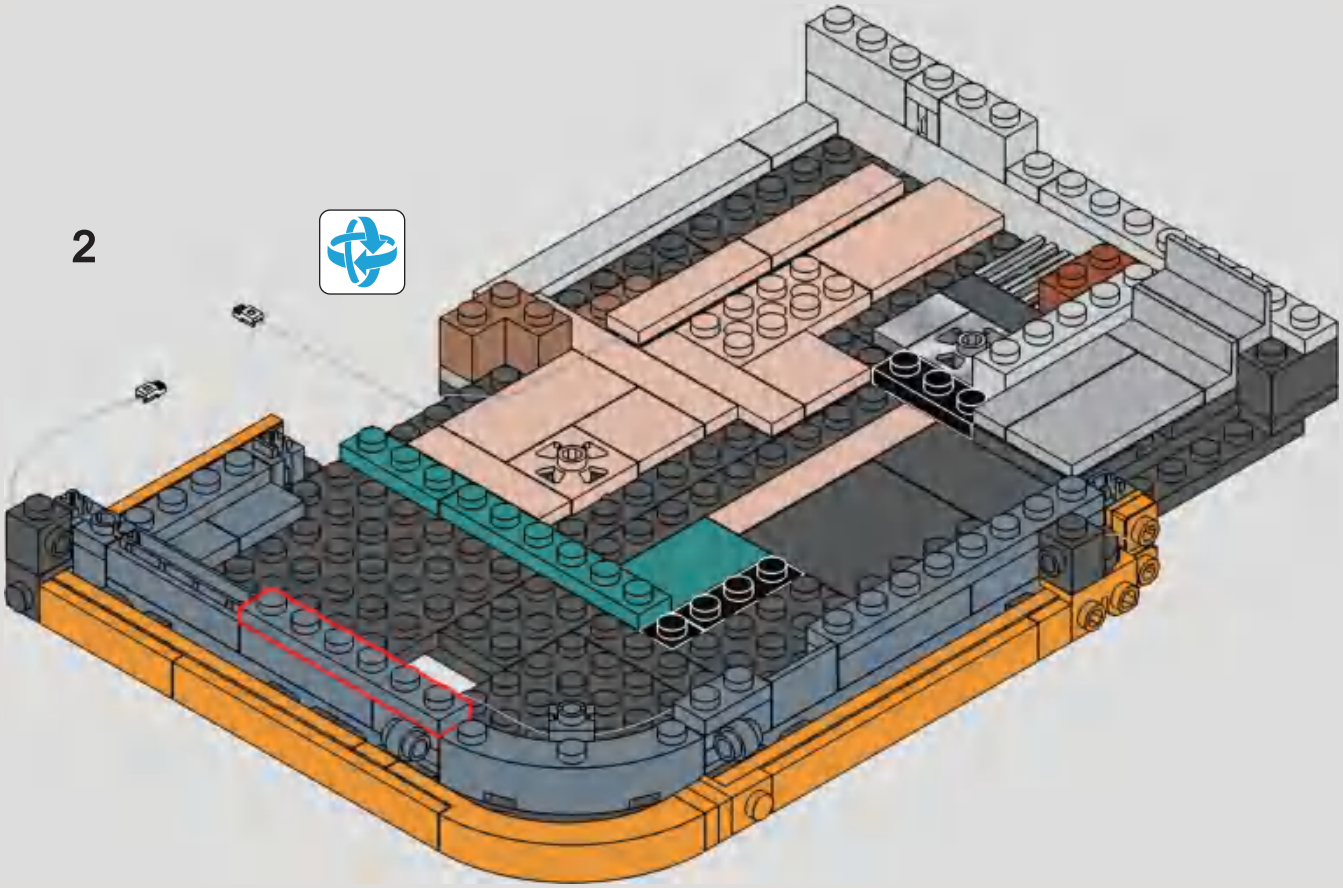

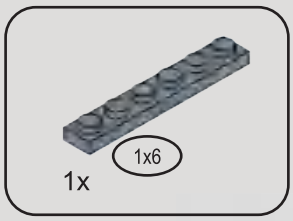

236

1

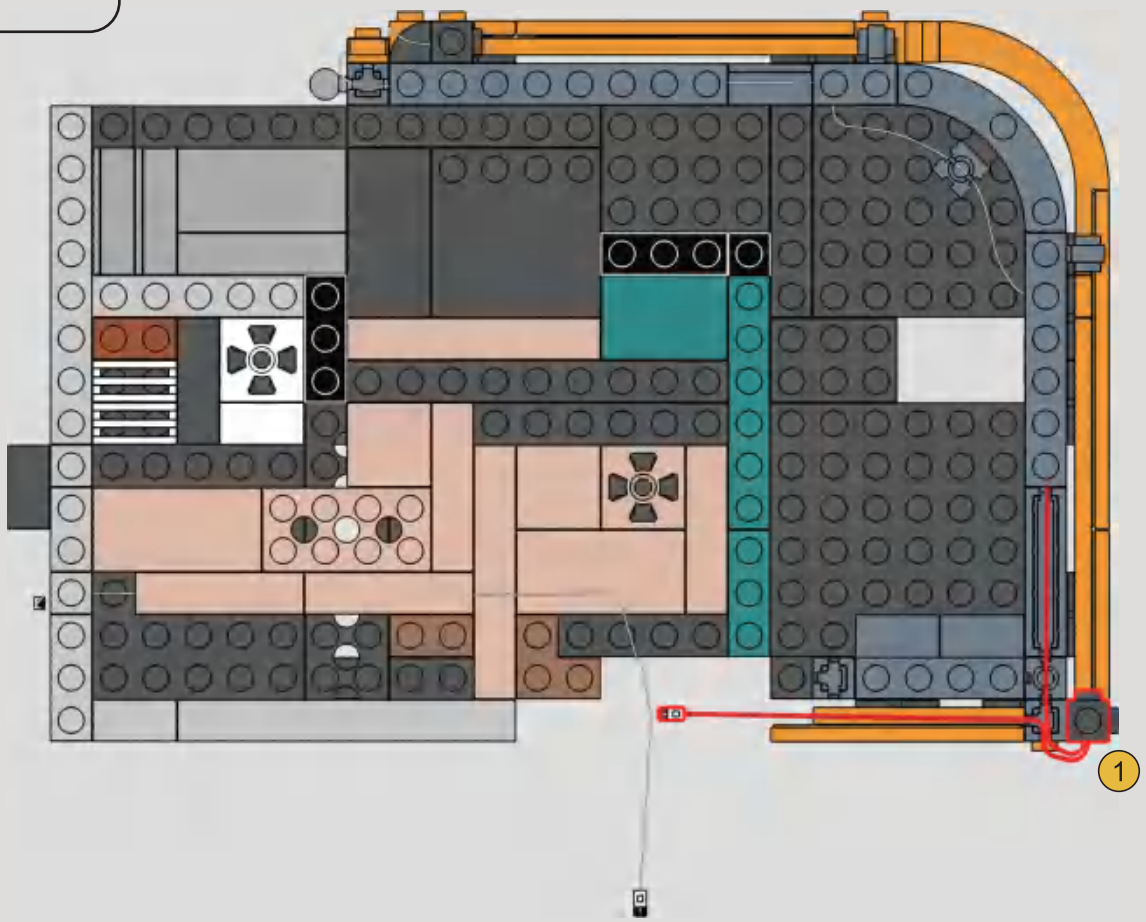

2

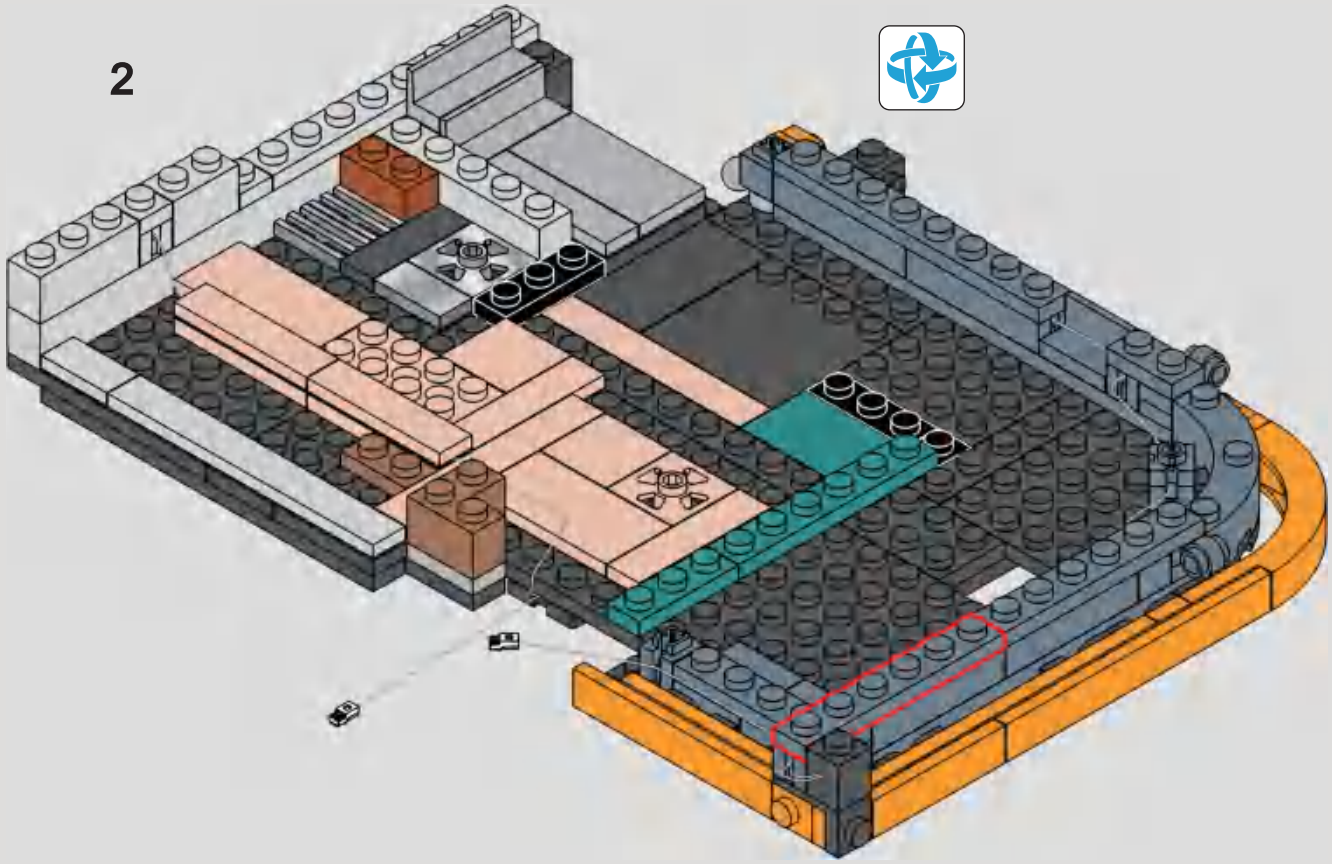

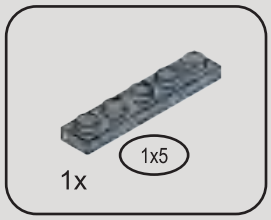

237

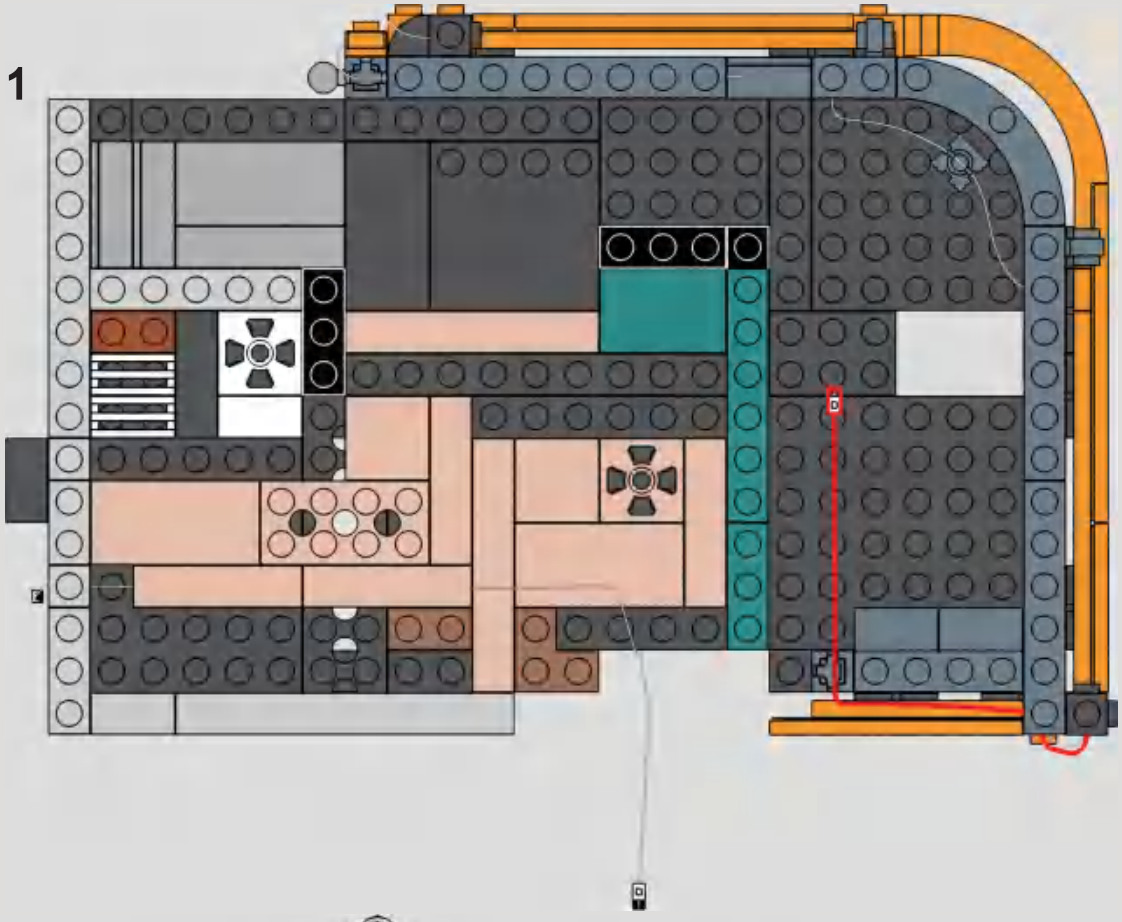

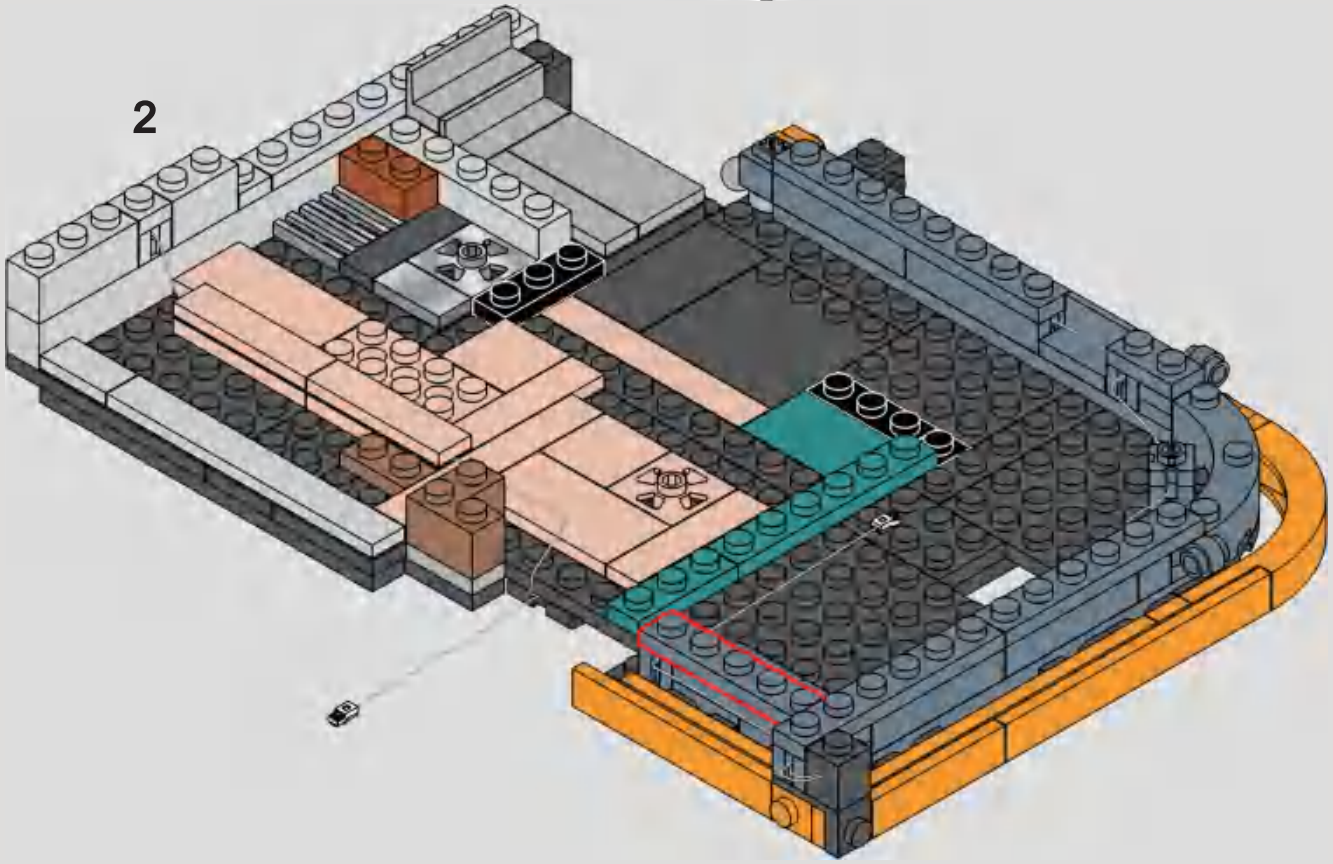

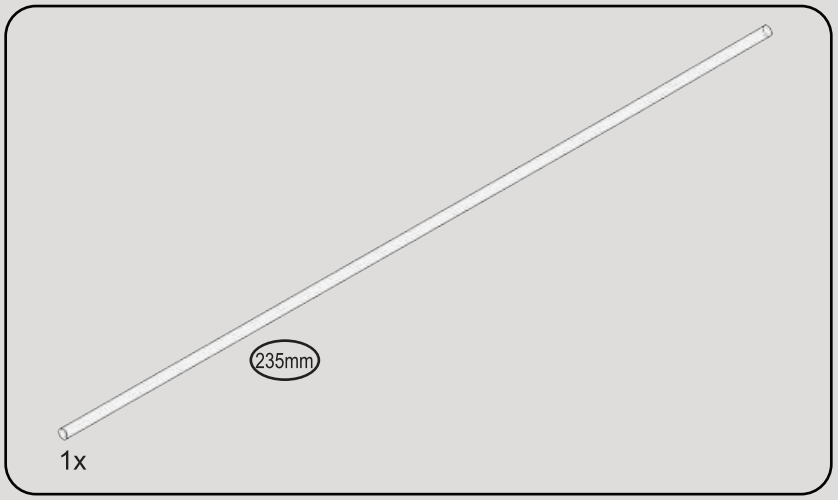

238

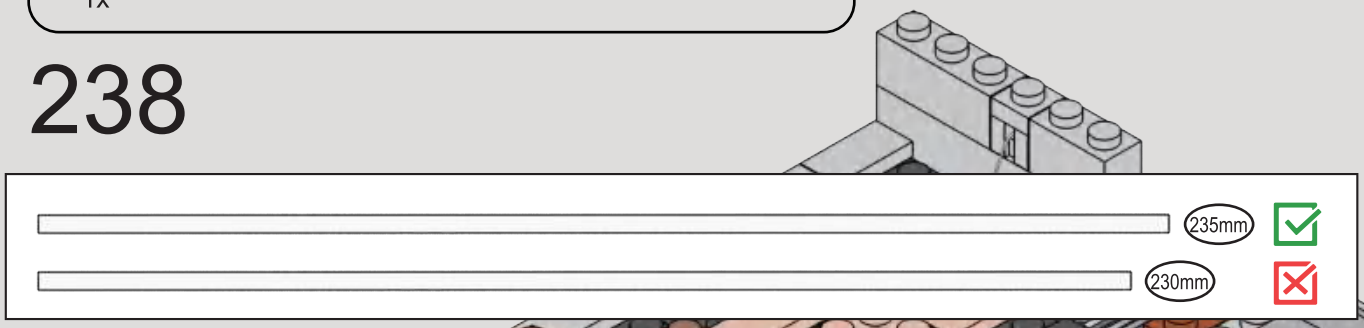

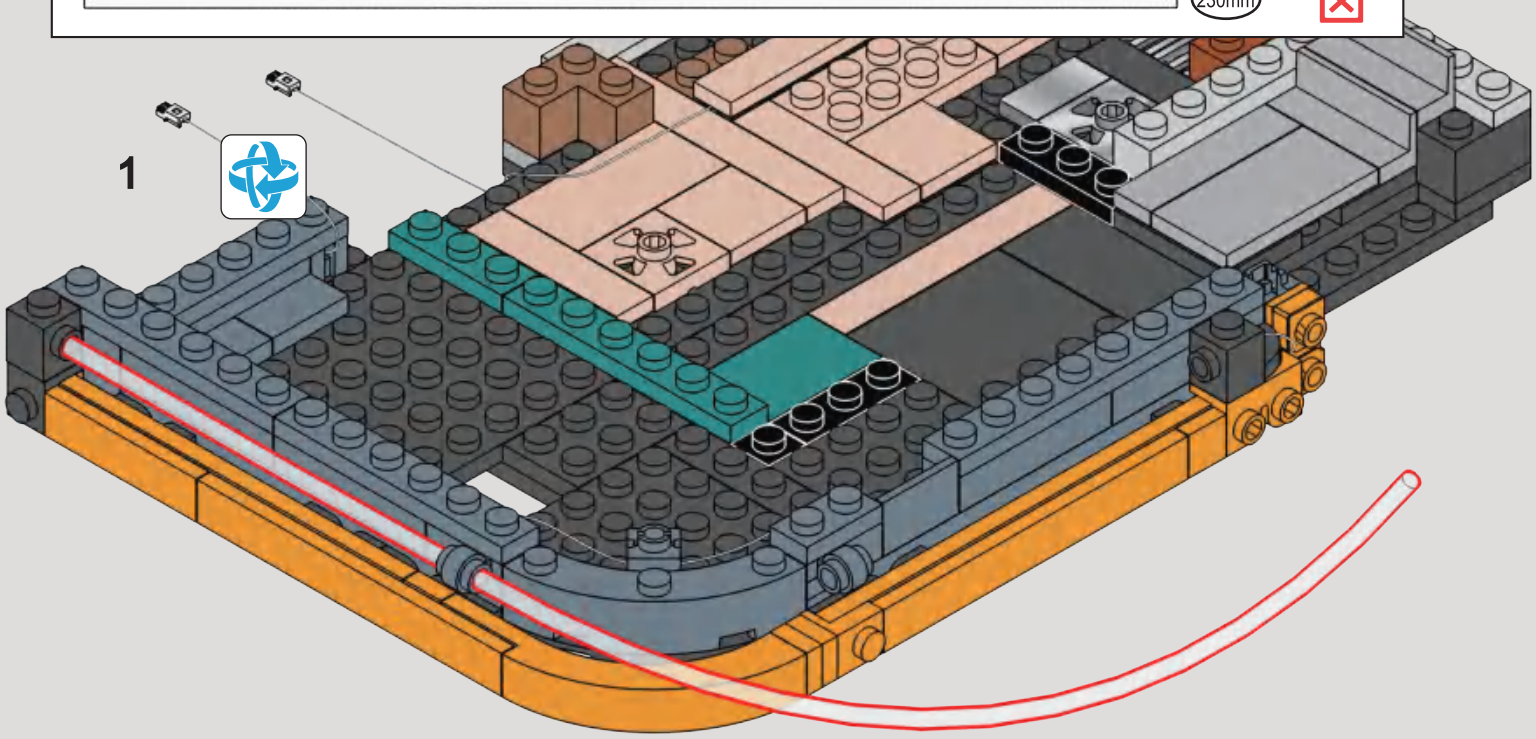

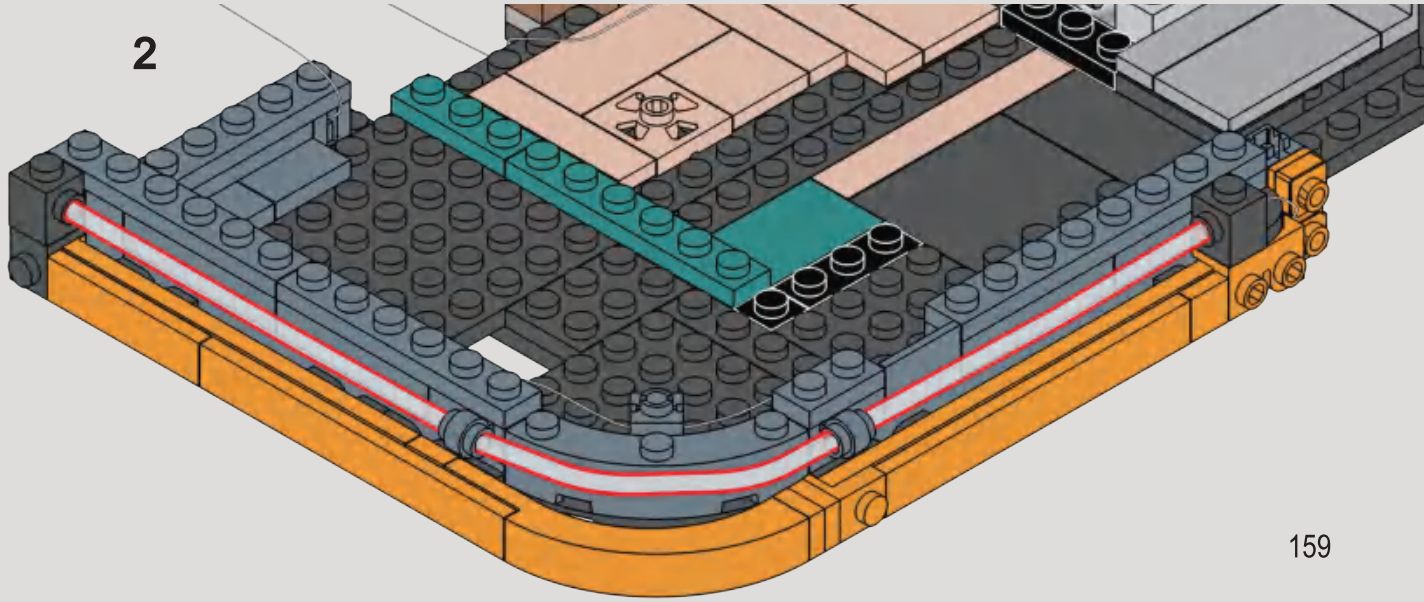

239

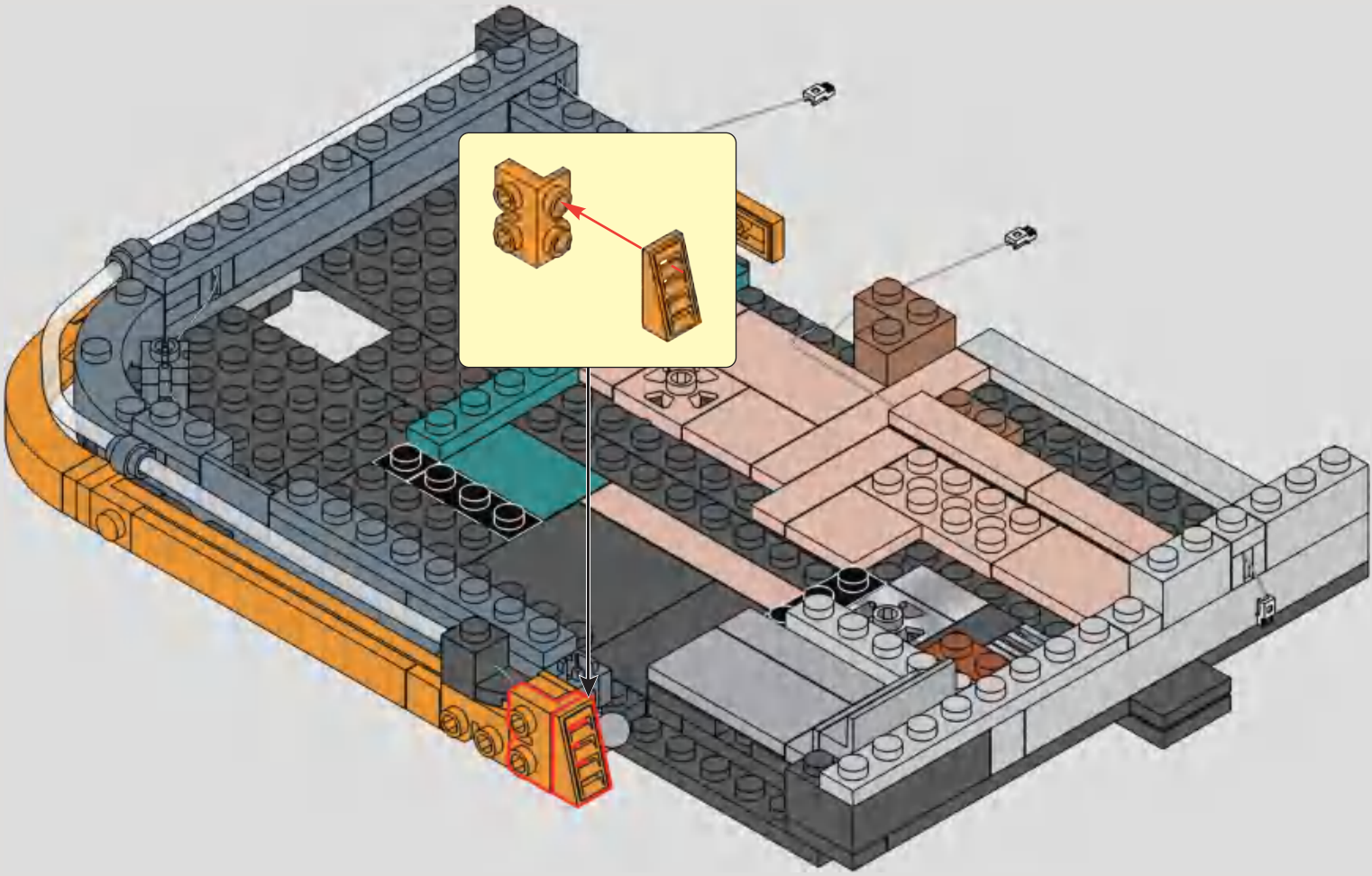

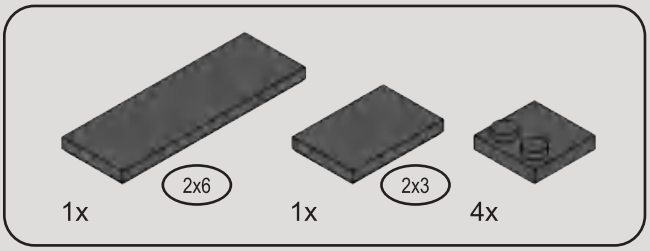

240

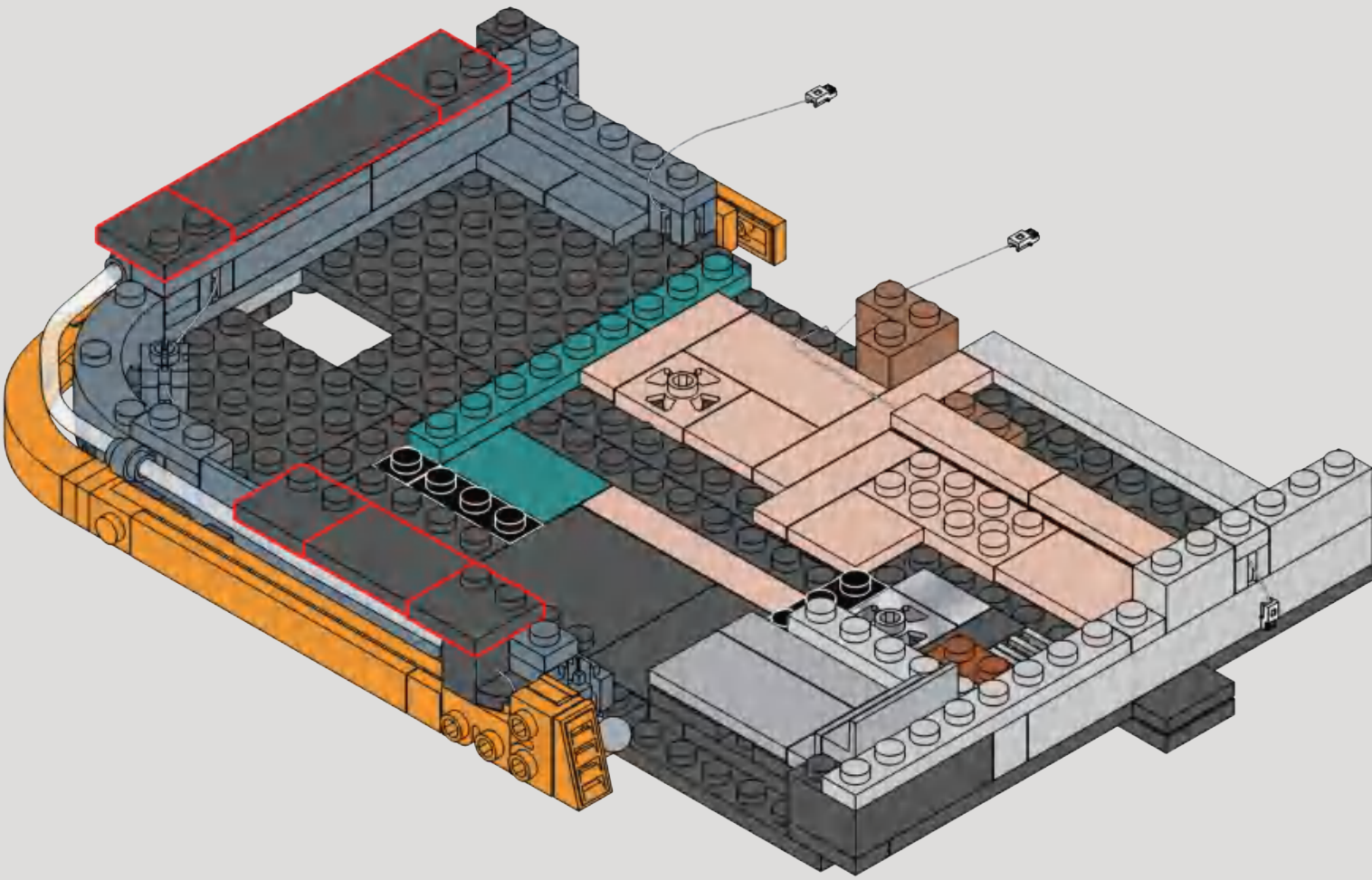

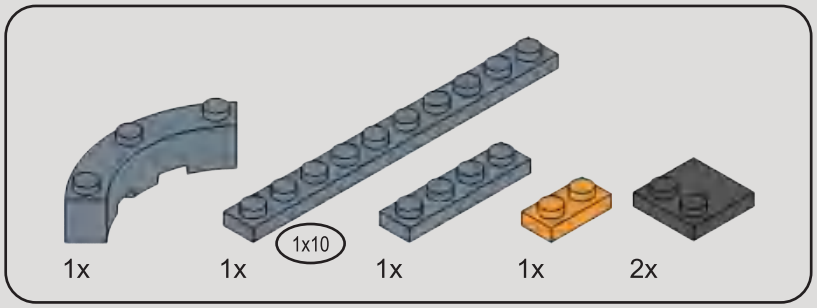

241

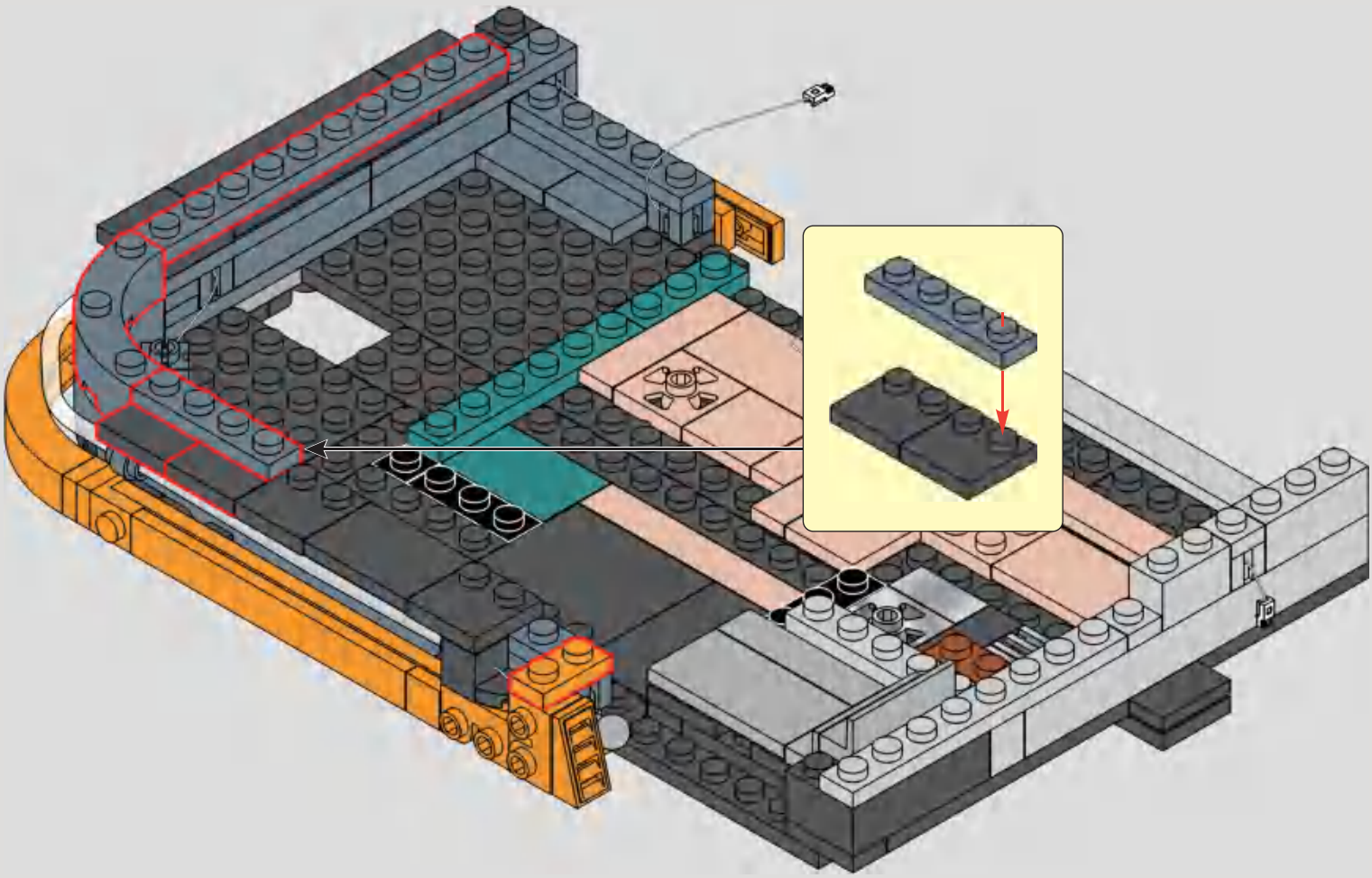

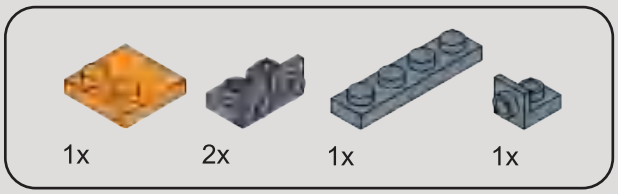

242

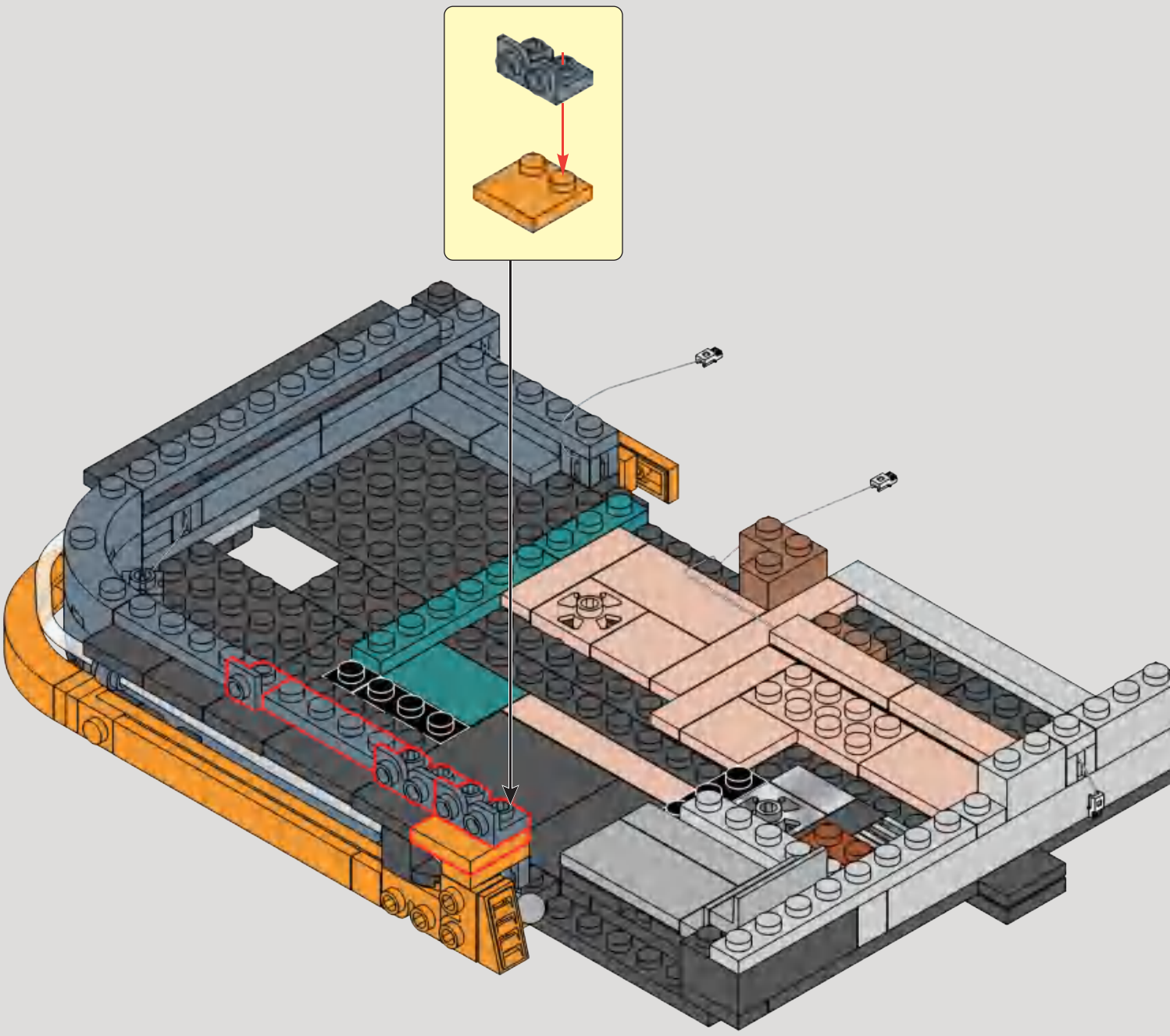

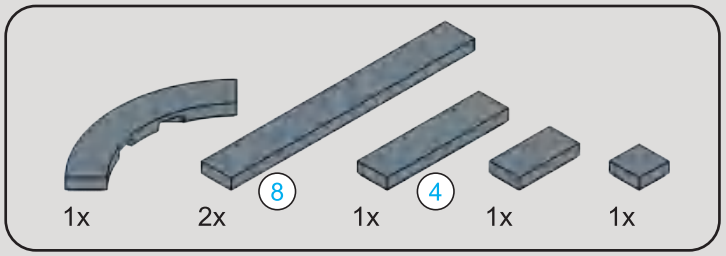

243

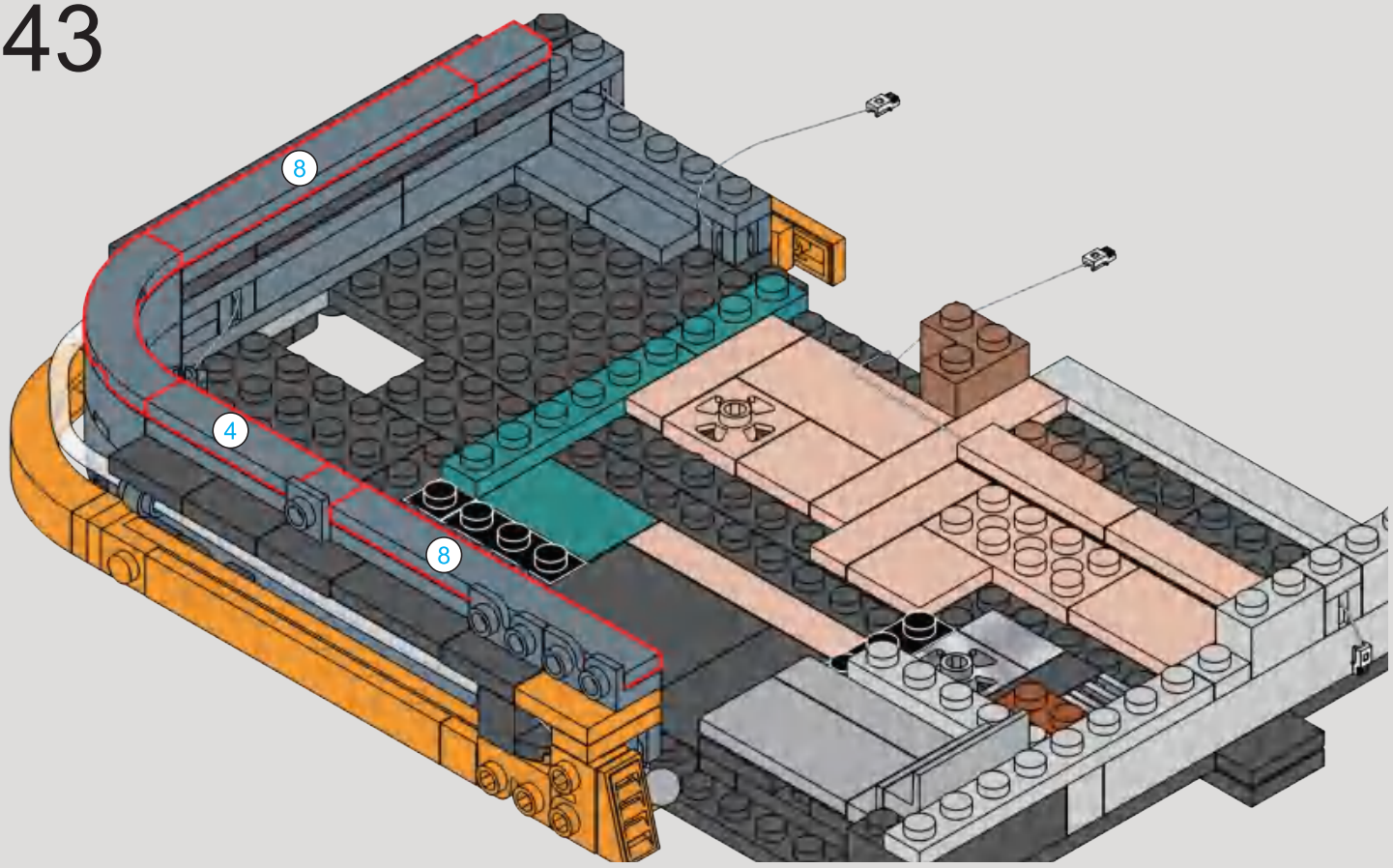

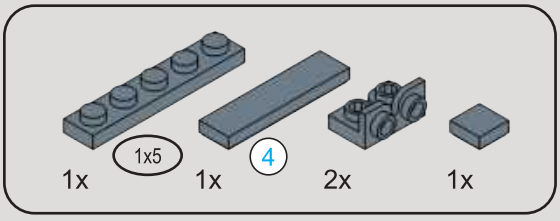

244

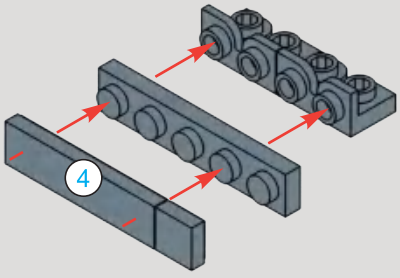

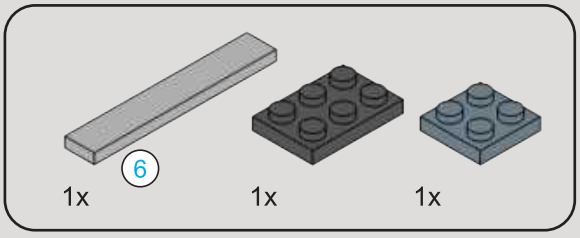

245

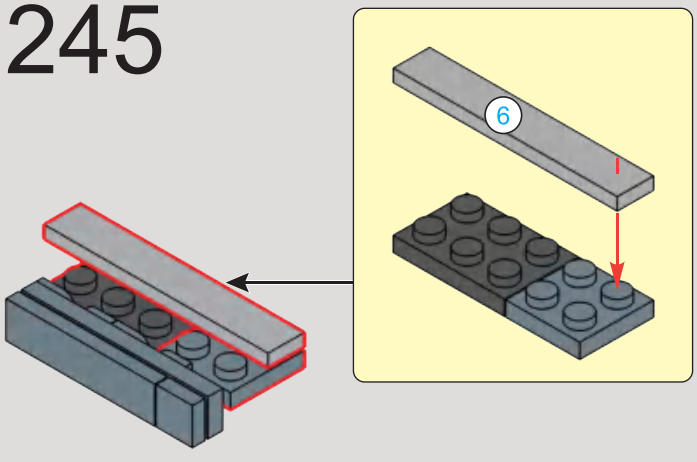

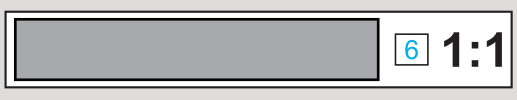

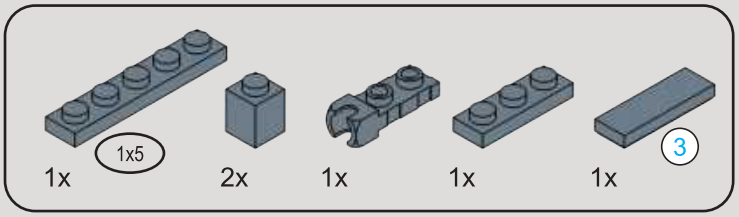

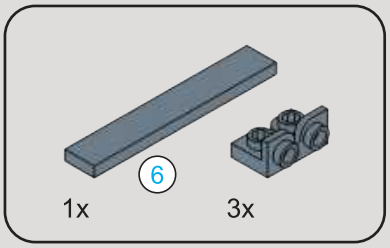

246

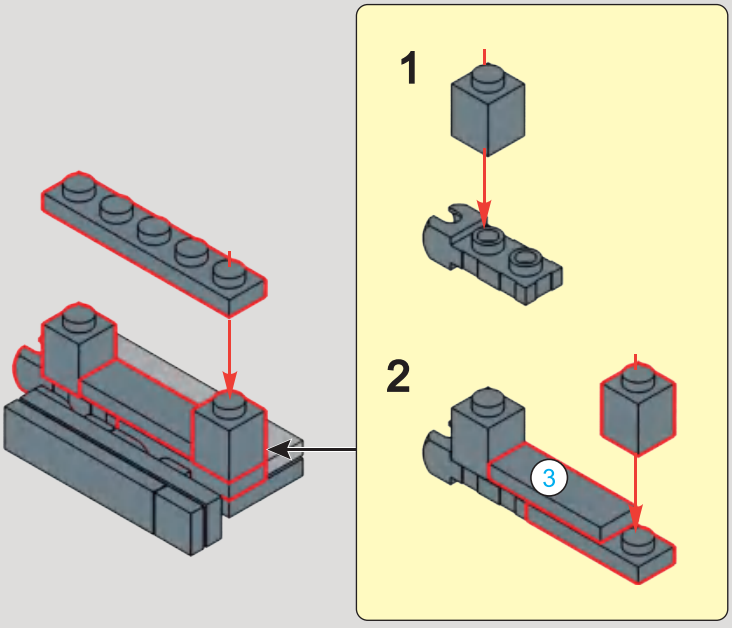

247

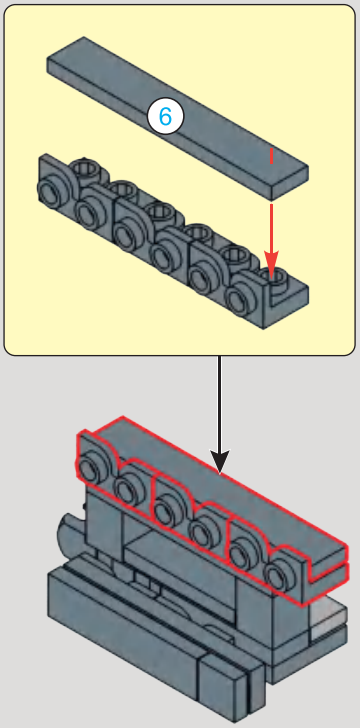

248

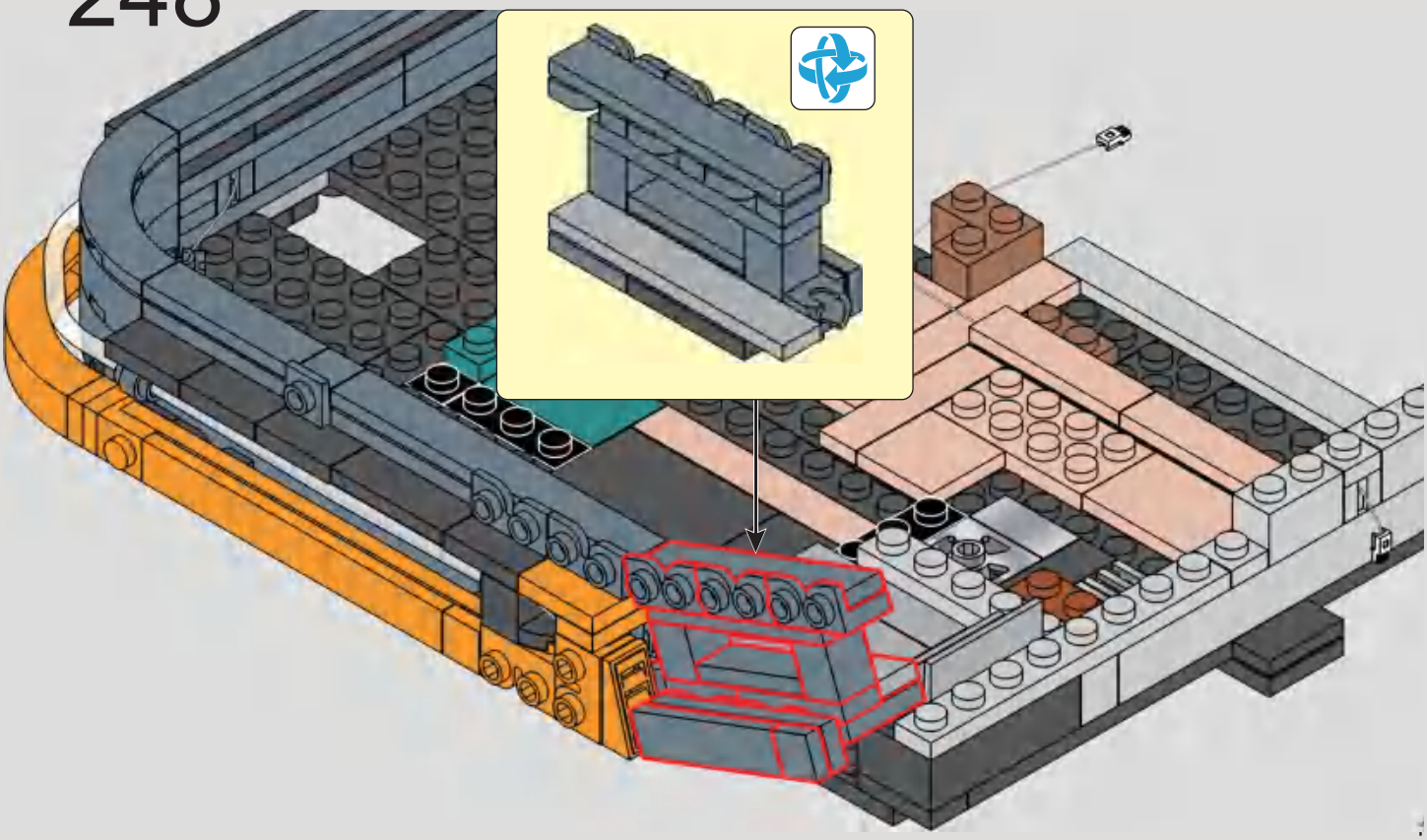

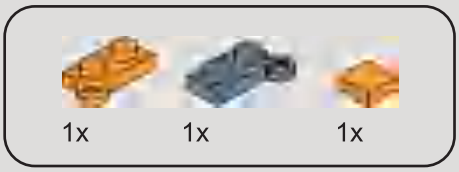

249

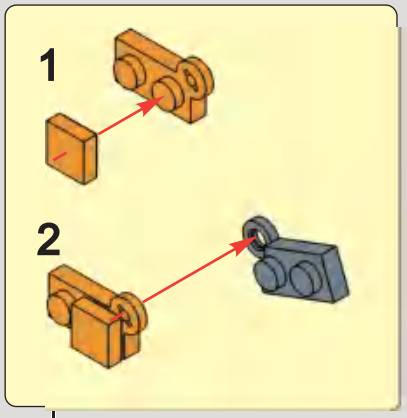

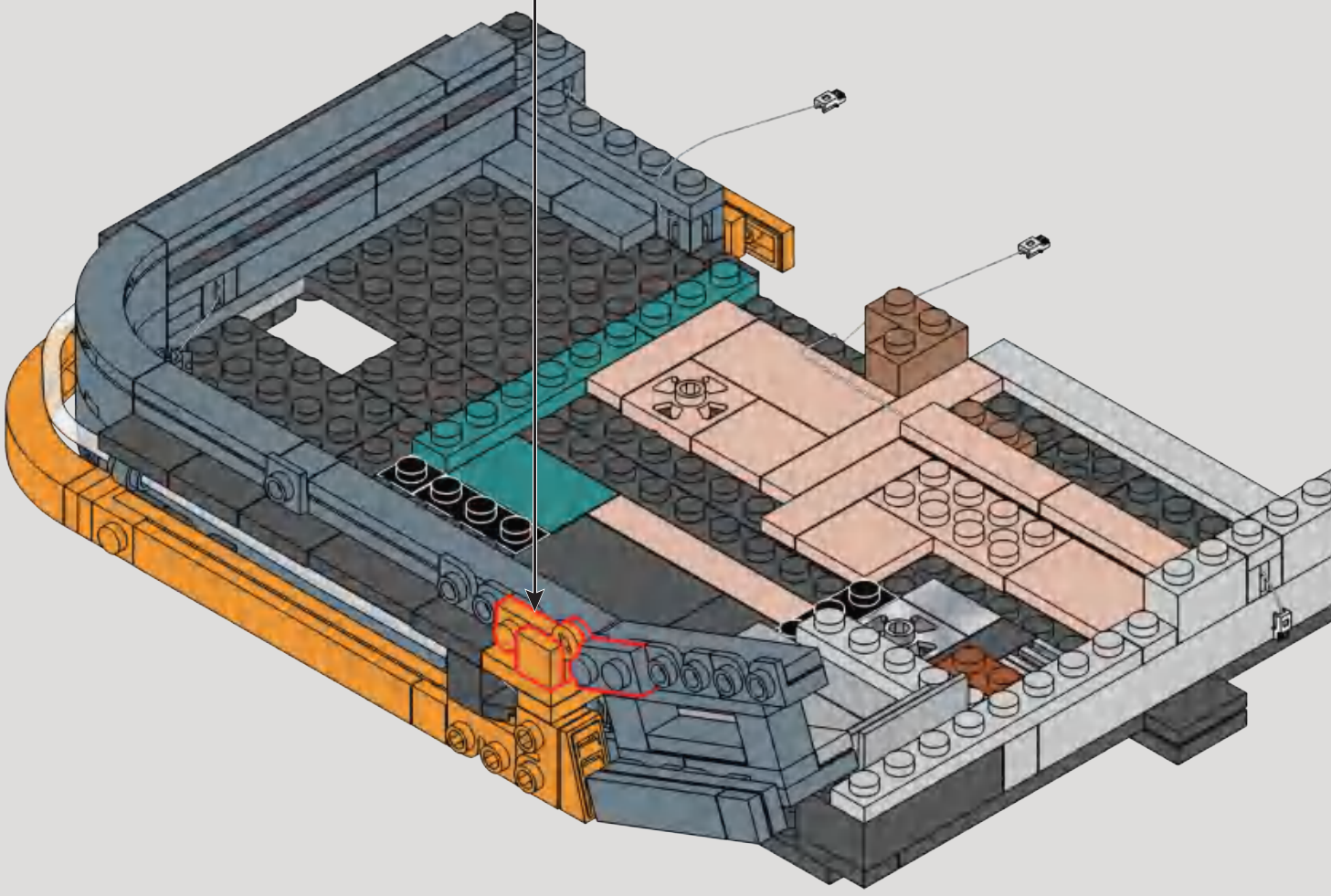

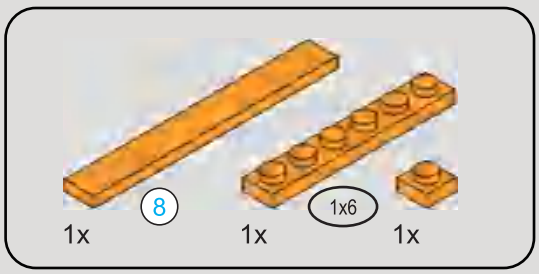

250

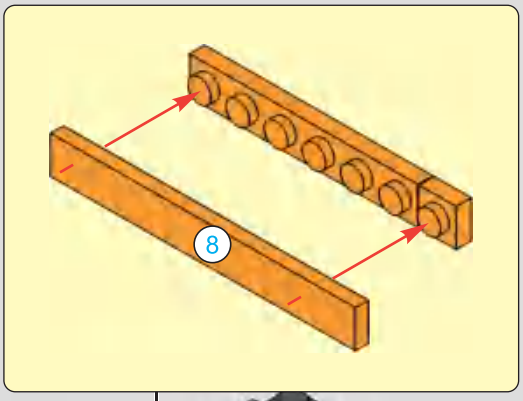

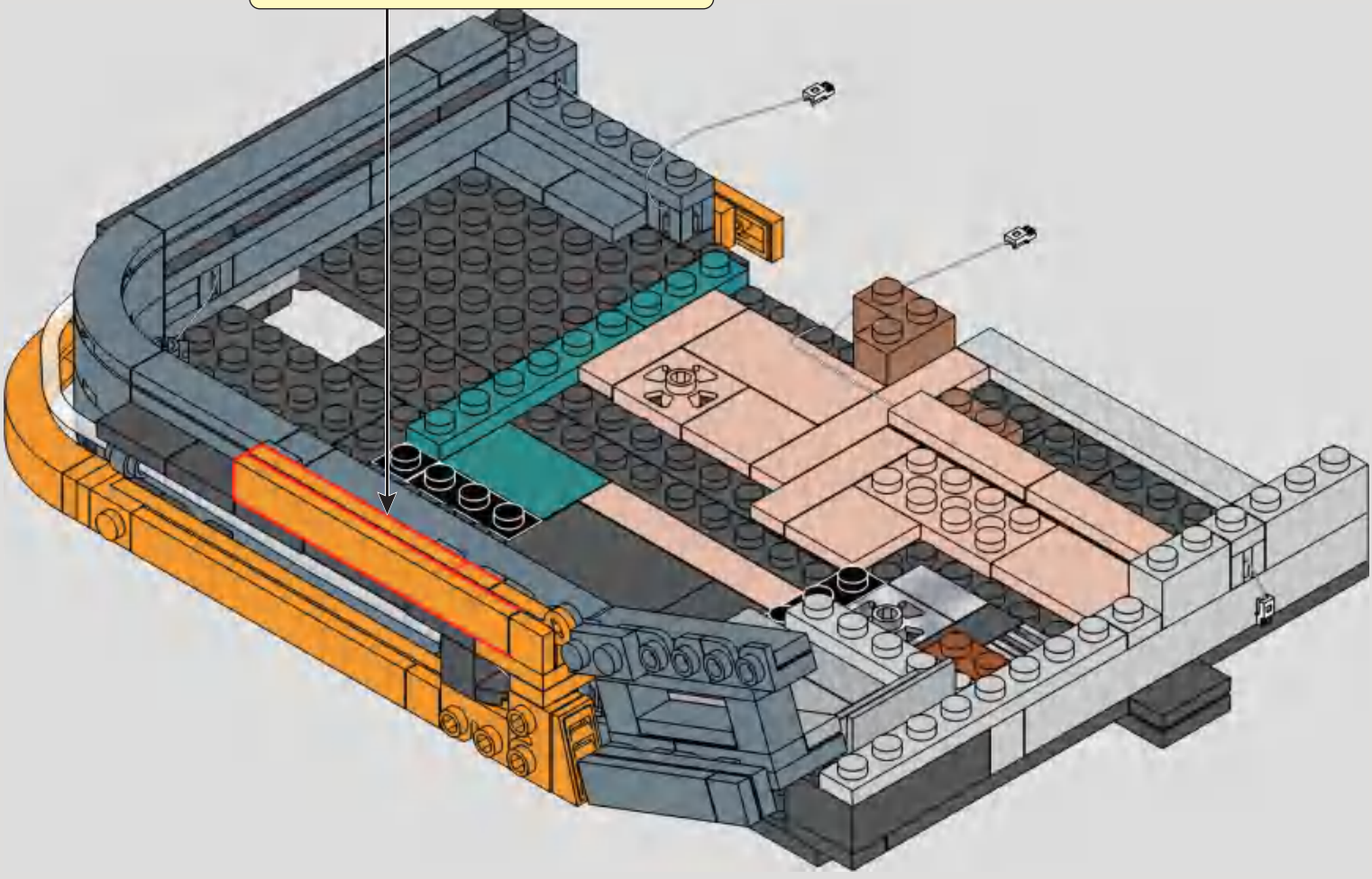

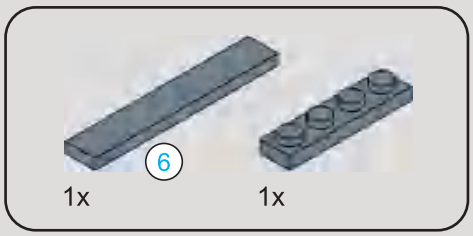

251

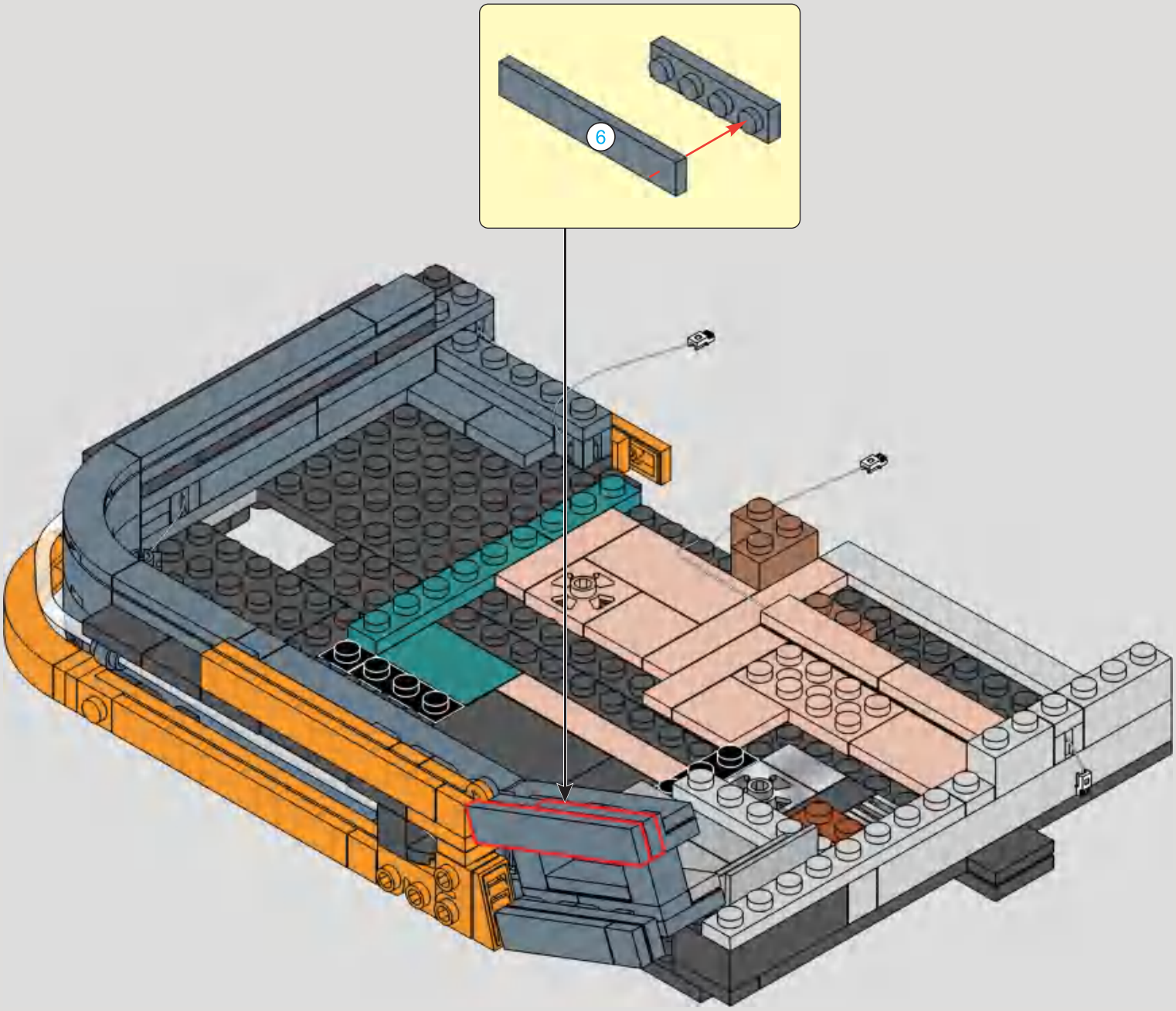

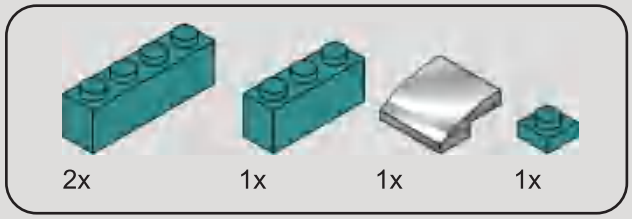

252

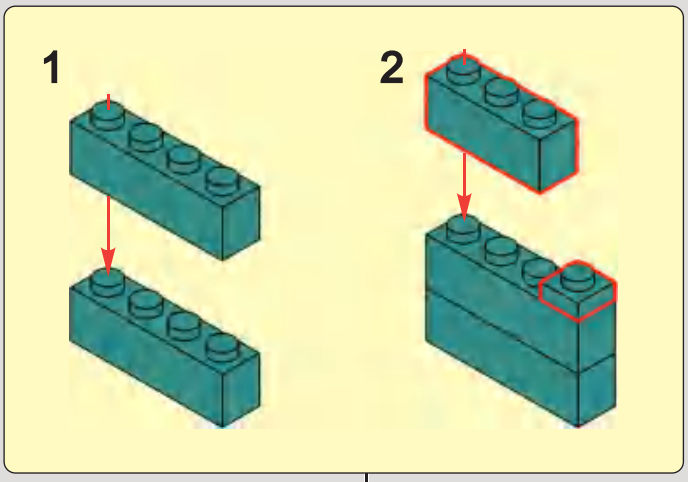

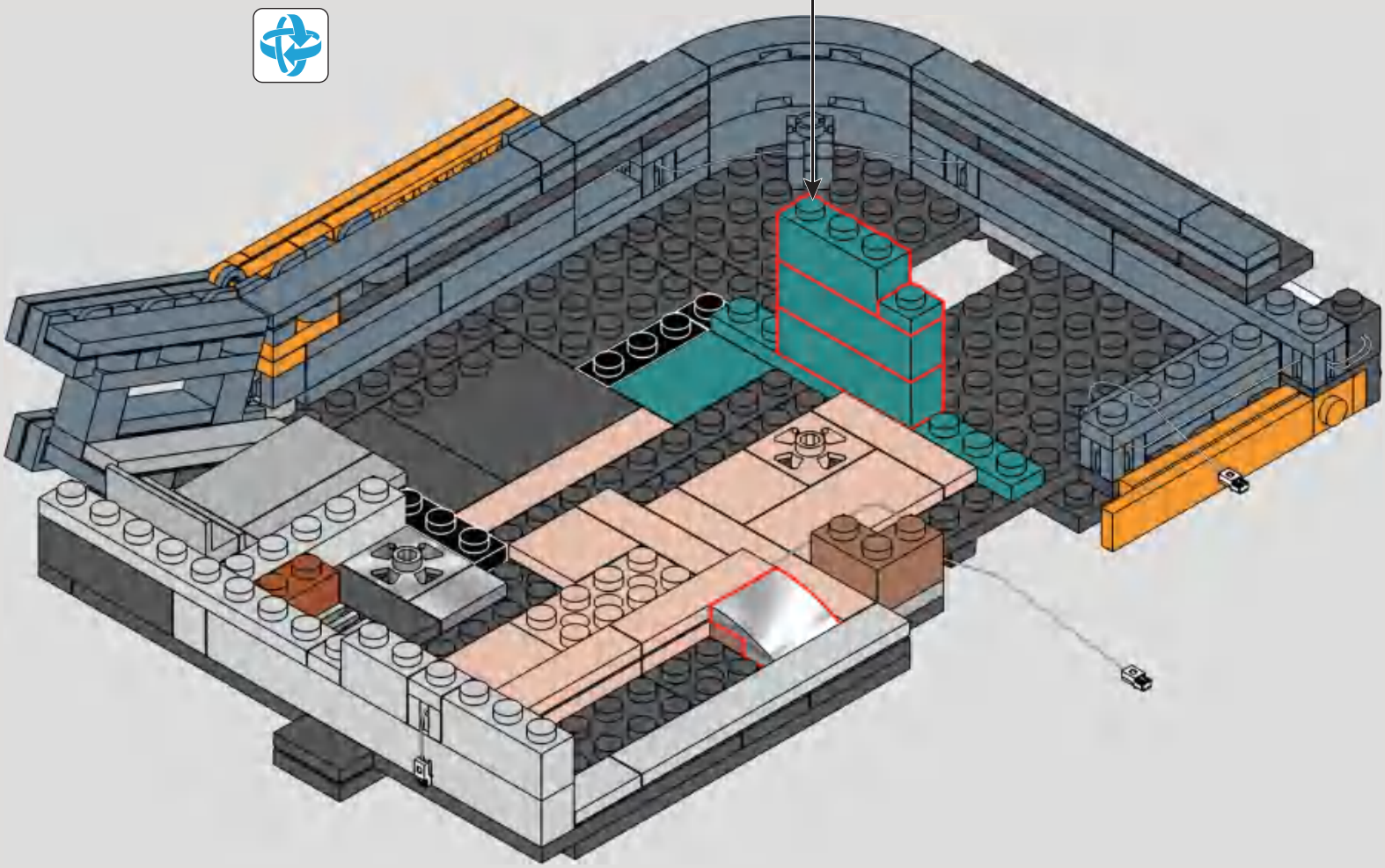

253

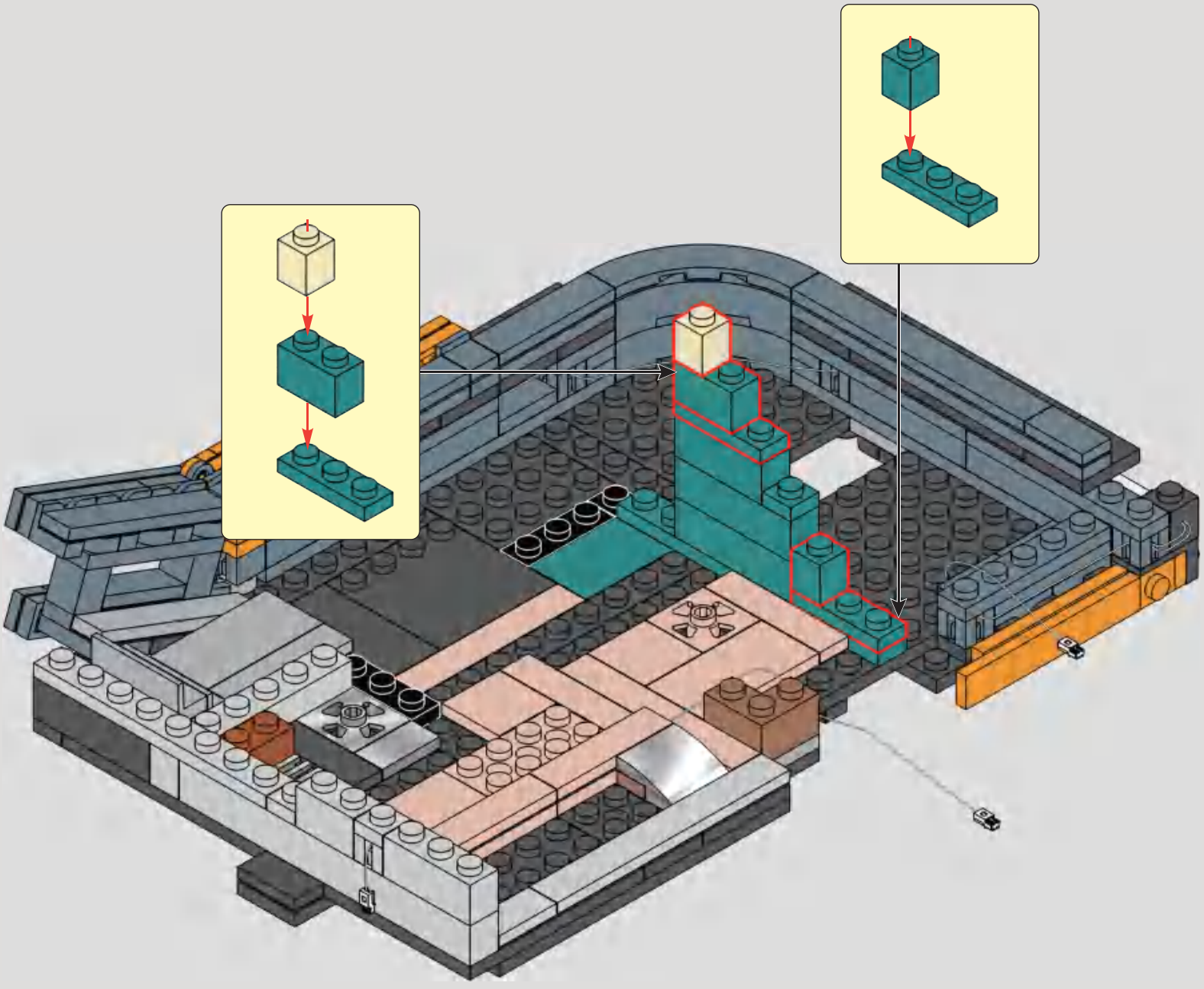

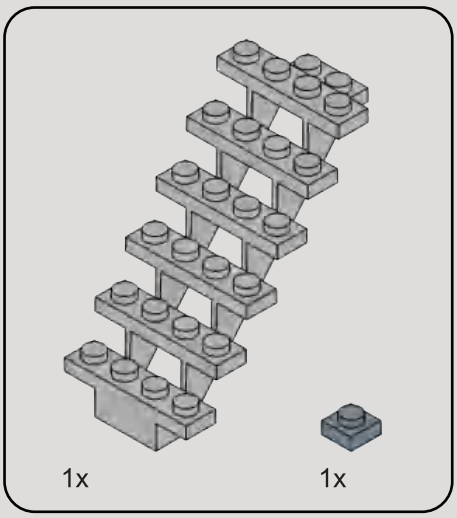

254

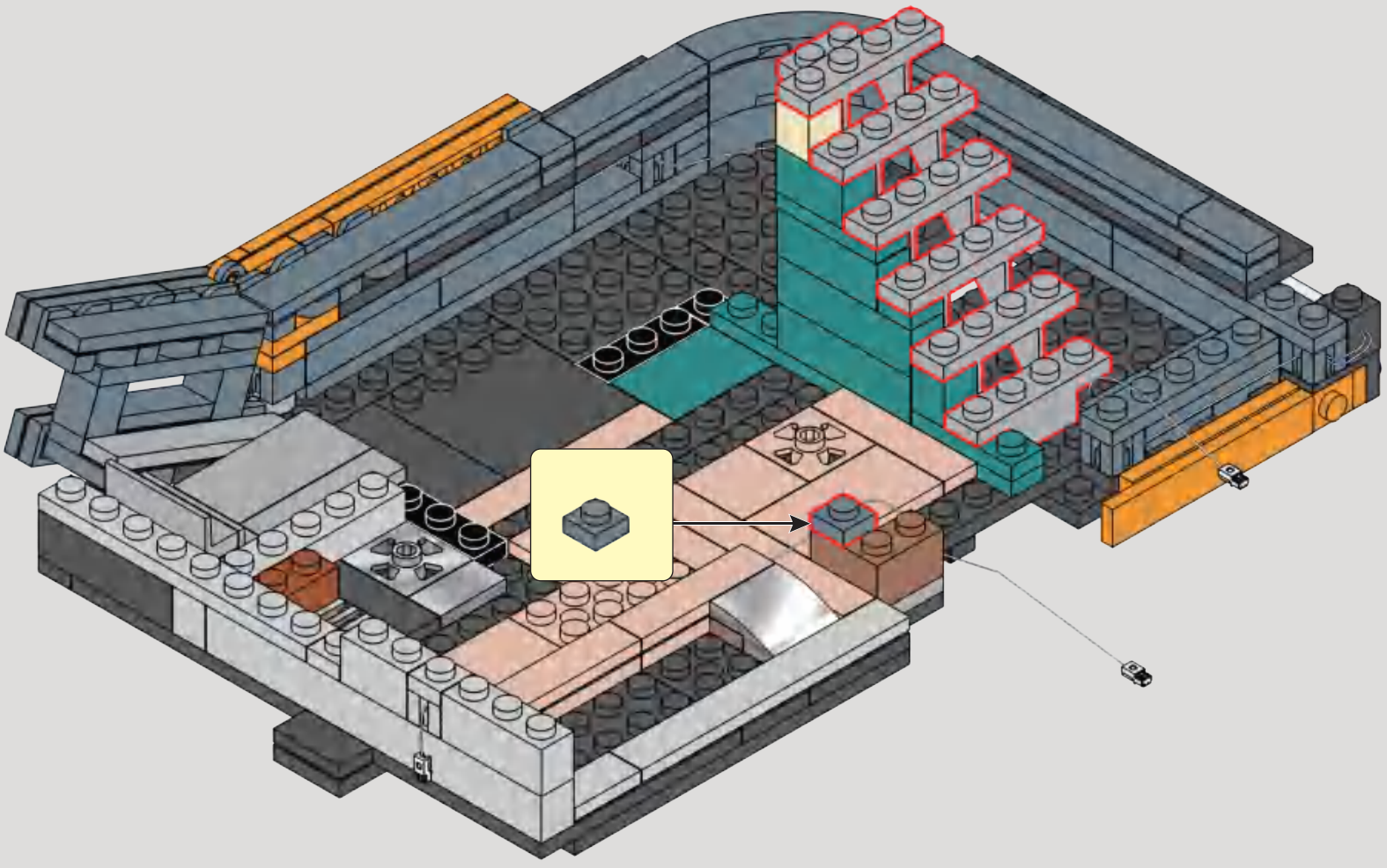

255

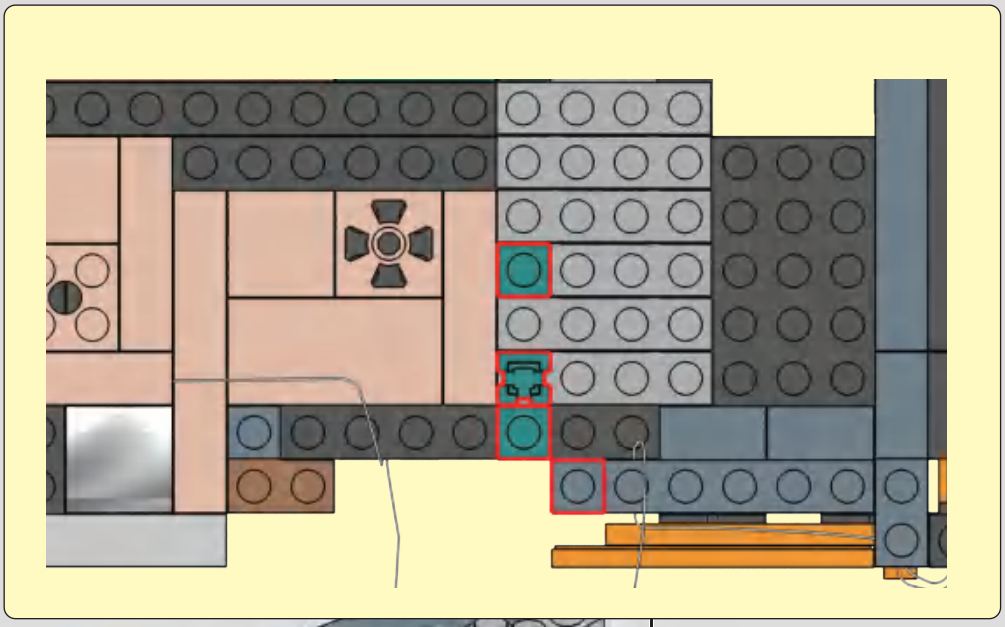

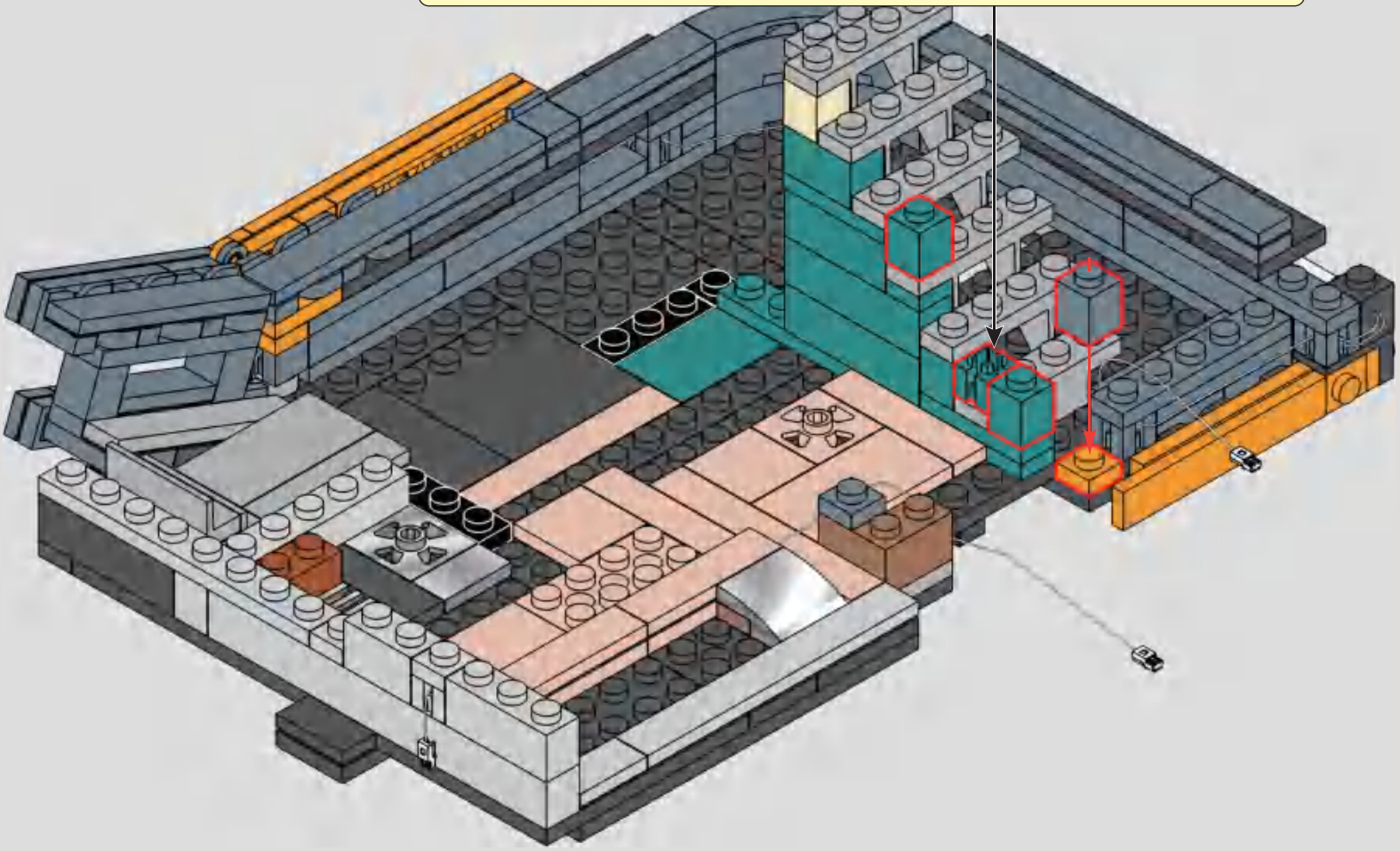

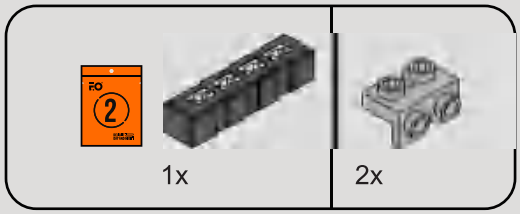

256

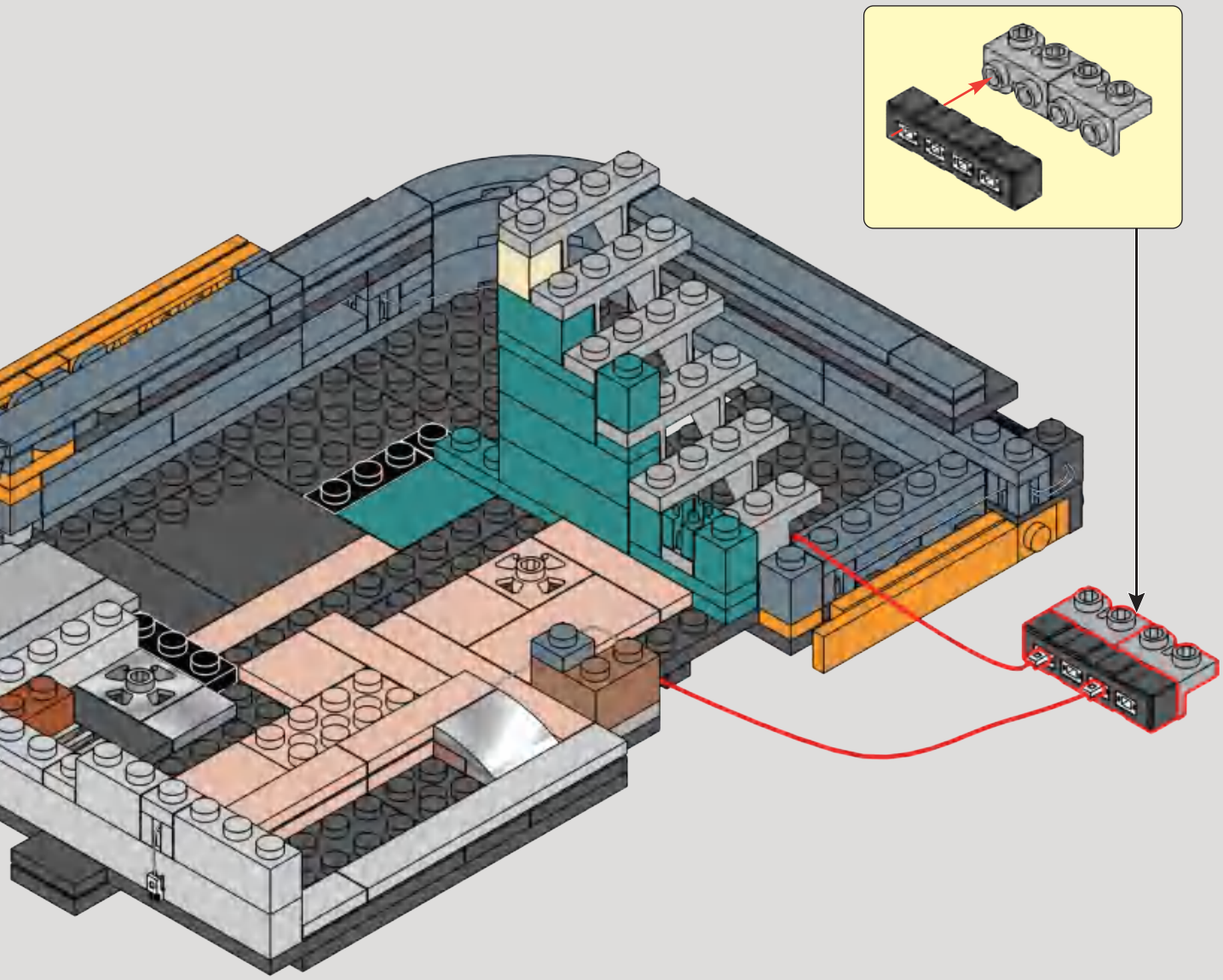

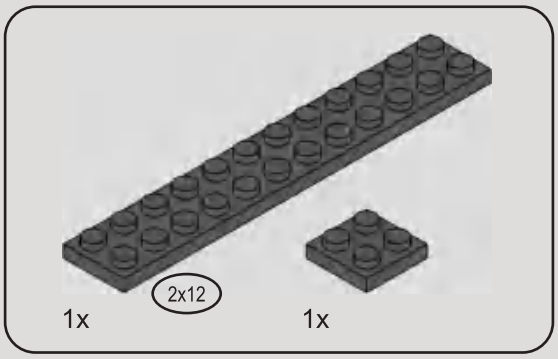

257

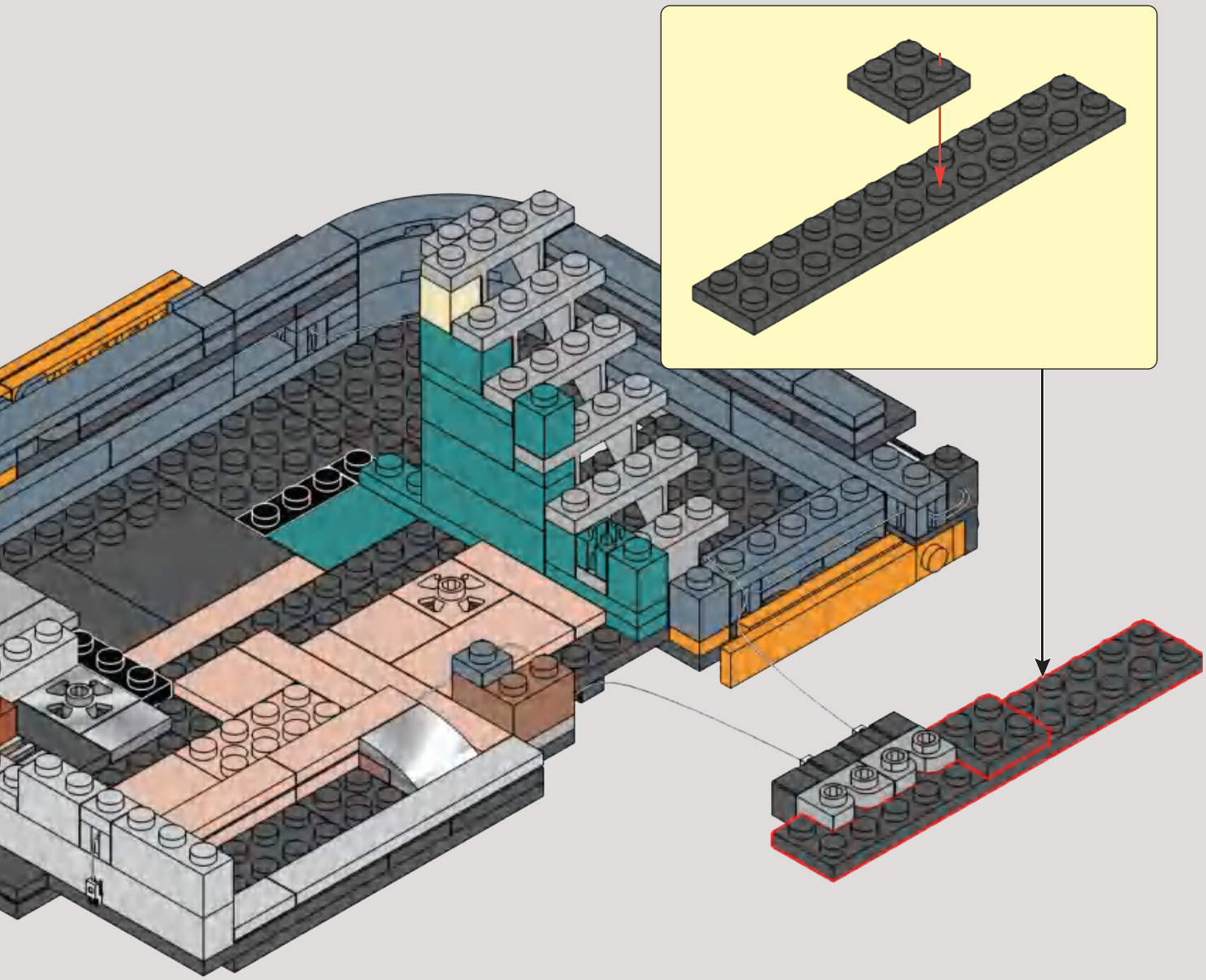

258

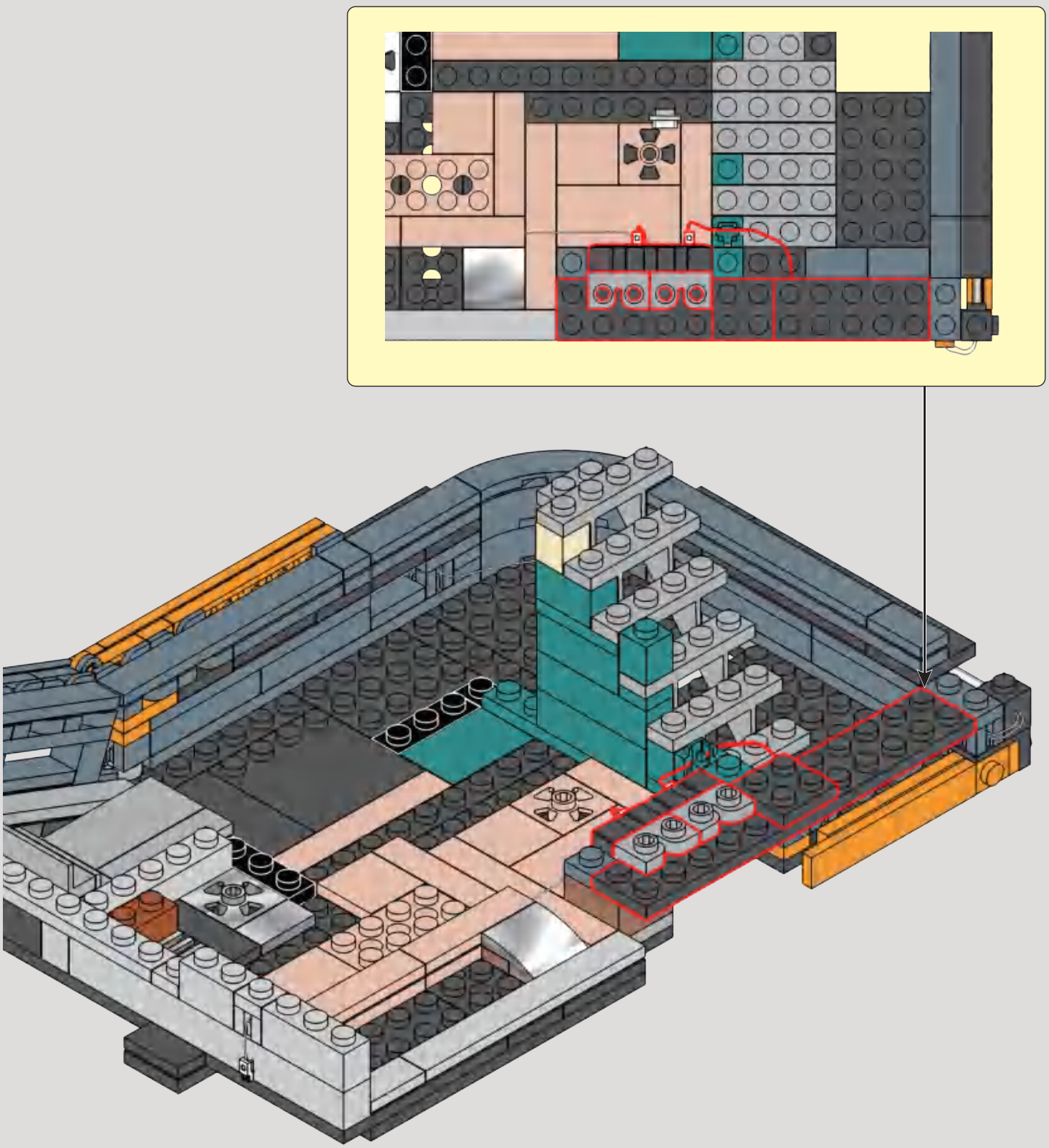

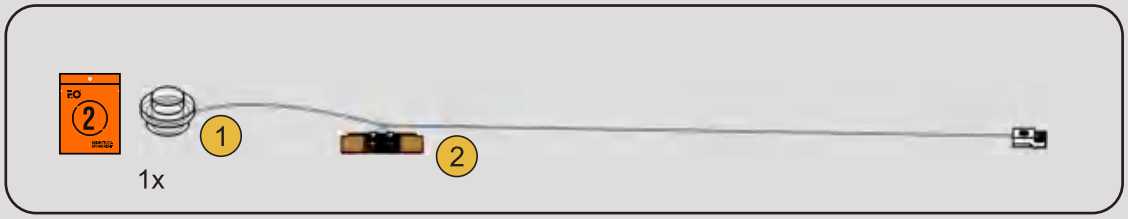

259

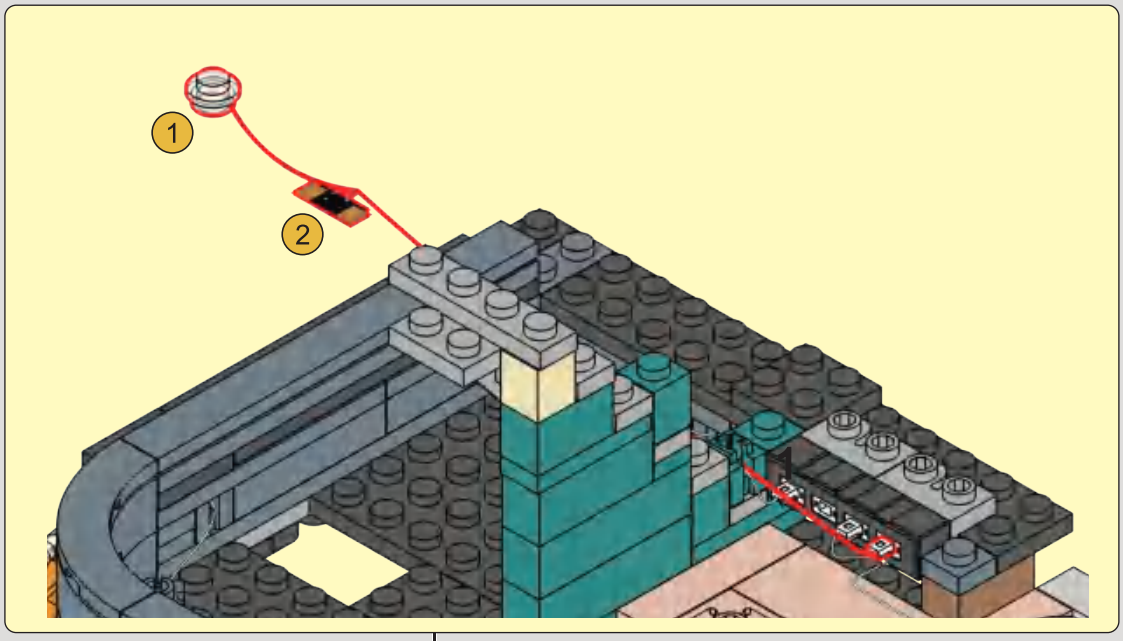

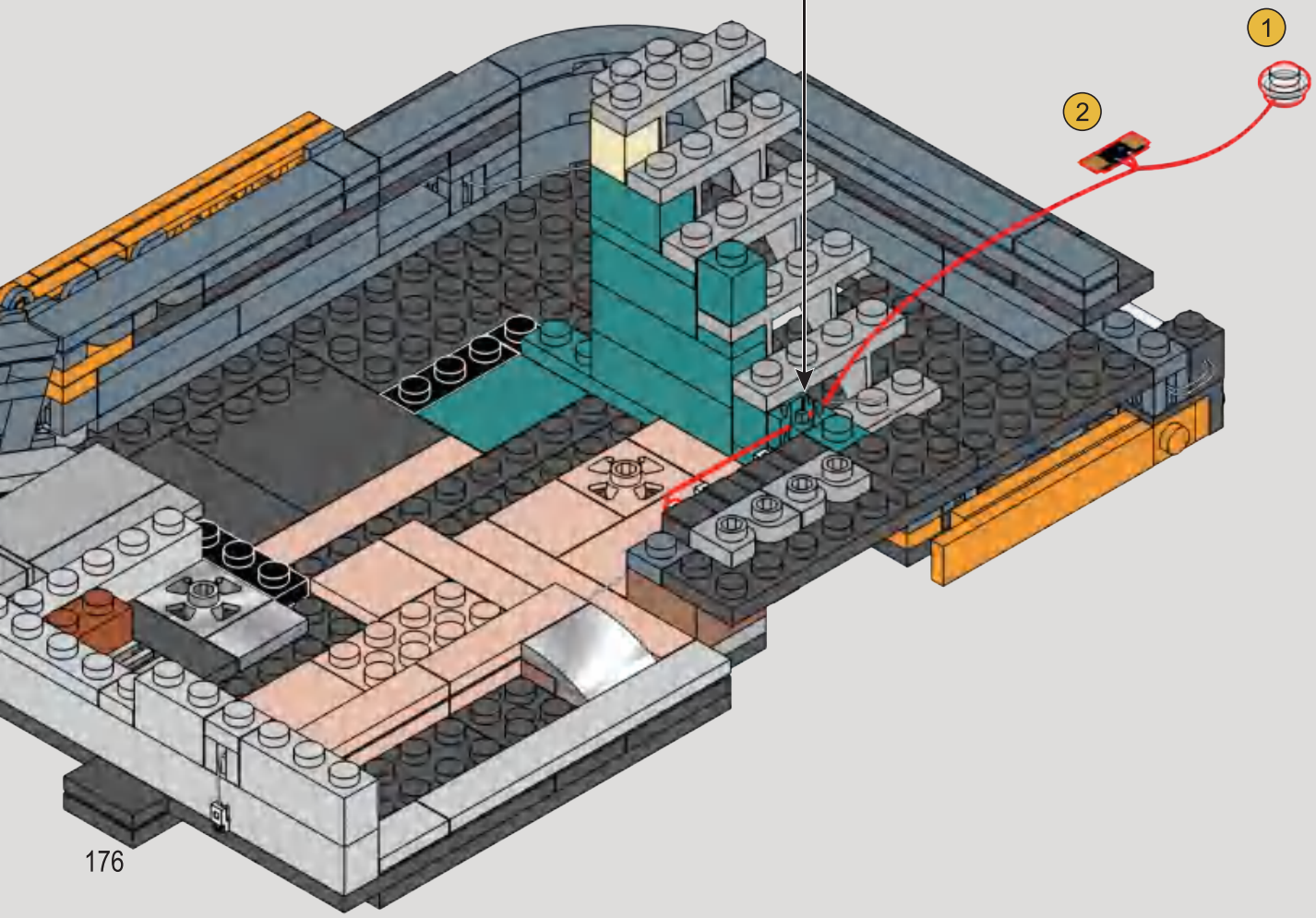

1x

260

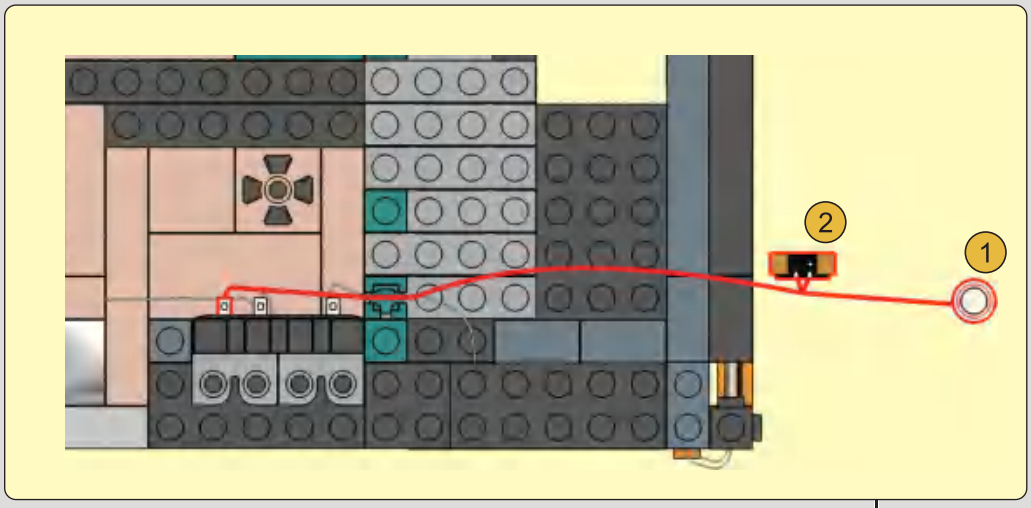

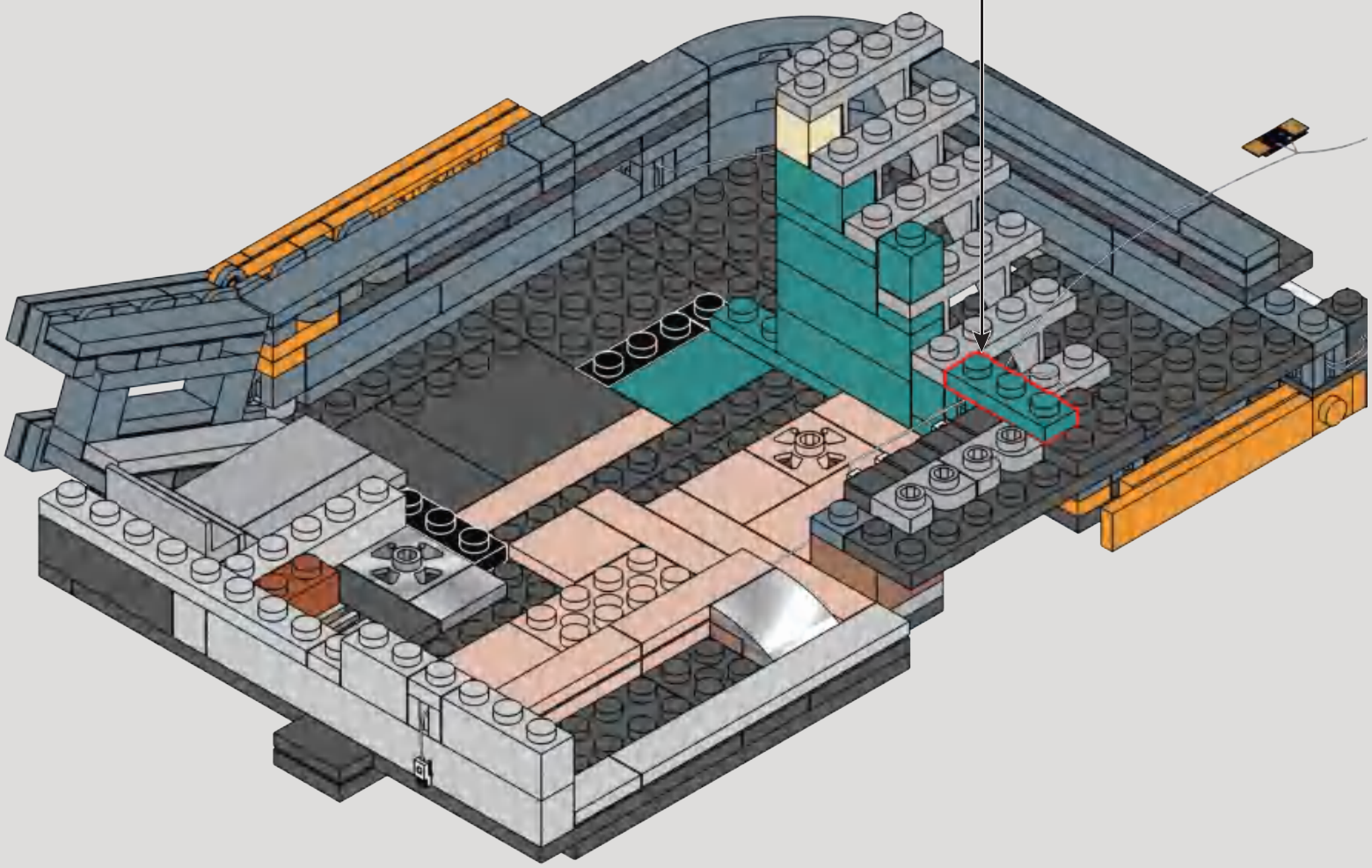

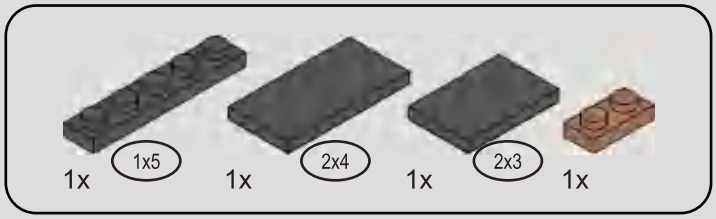

261

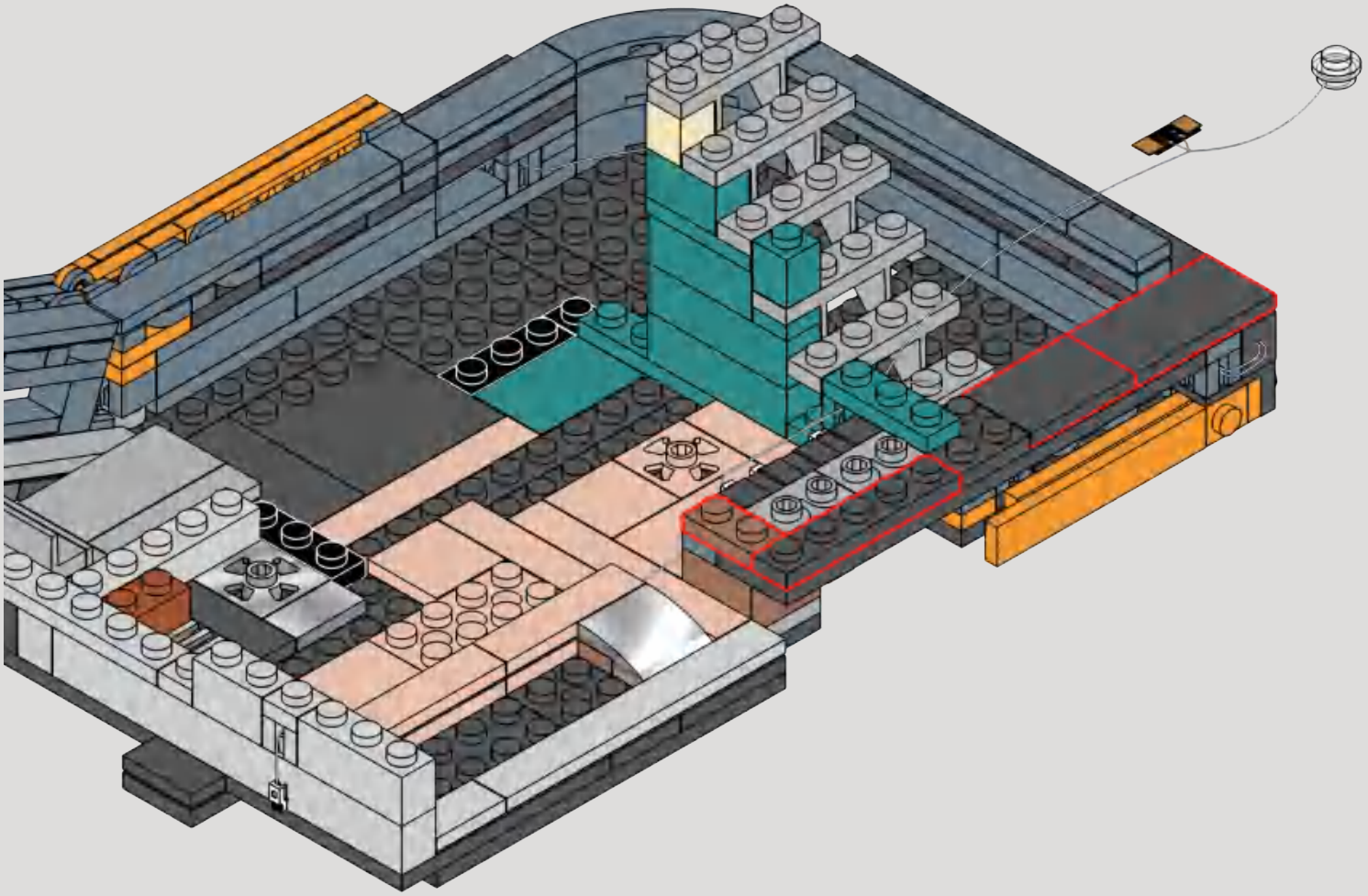

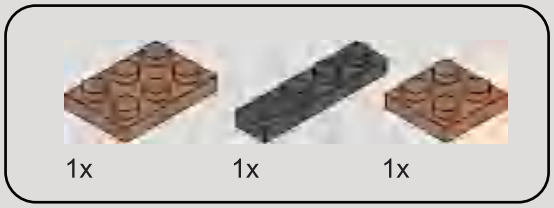

262

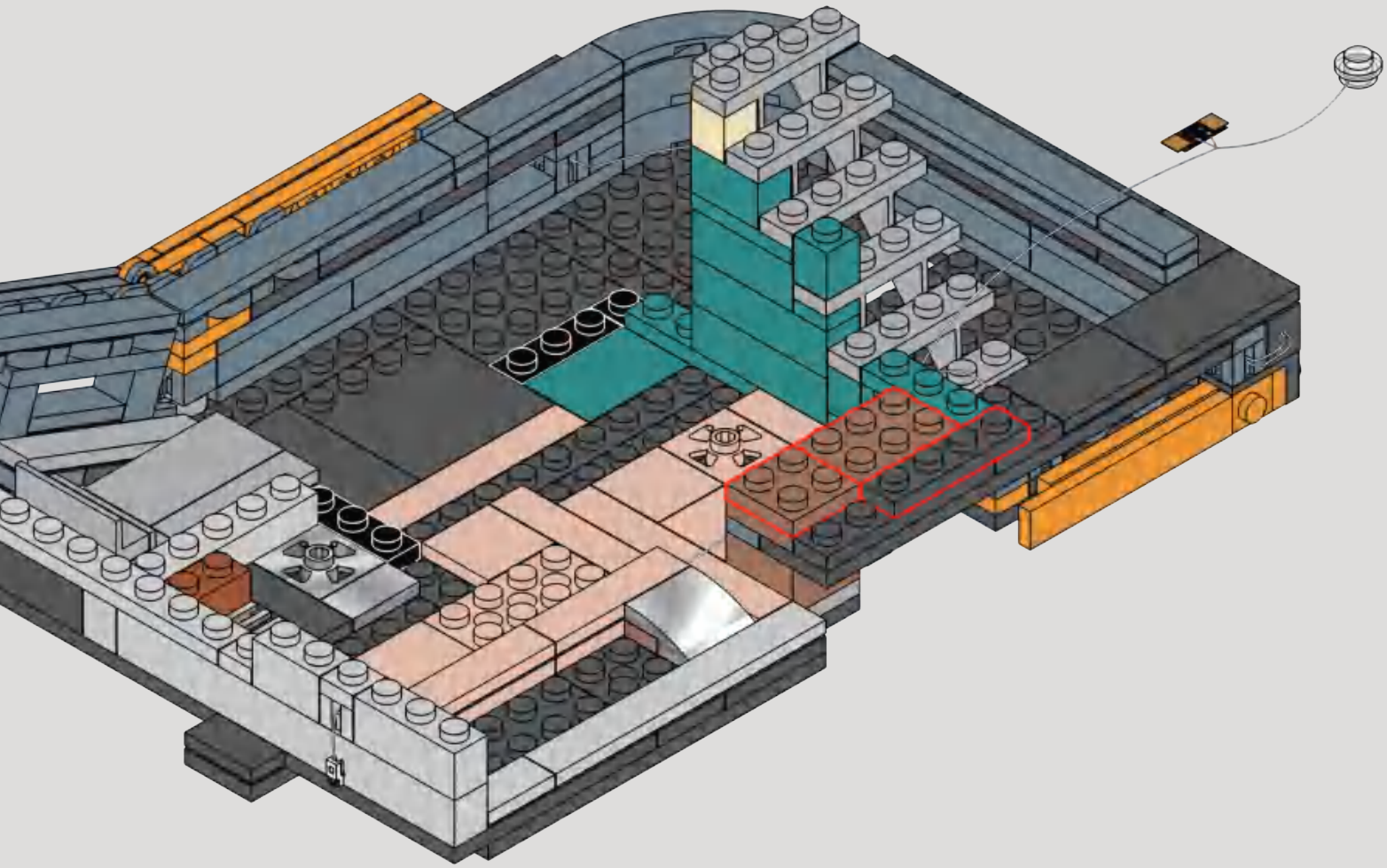

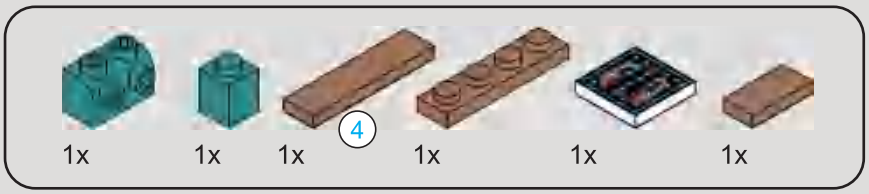

263

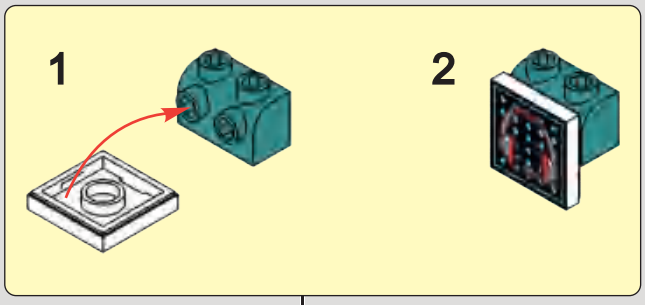

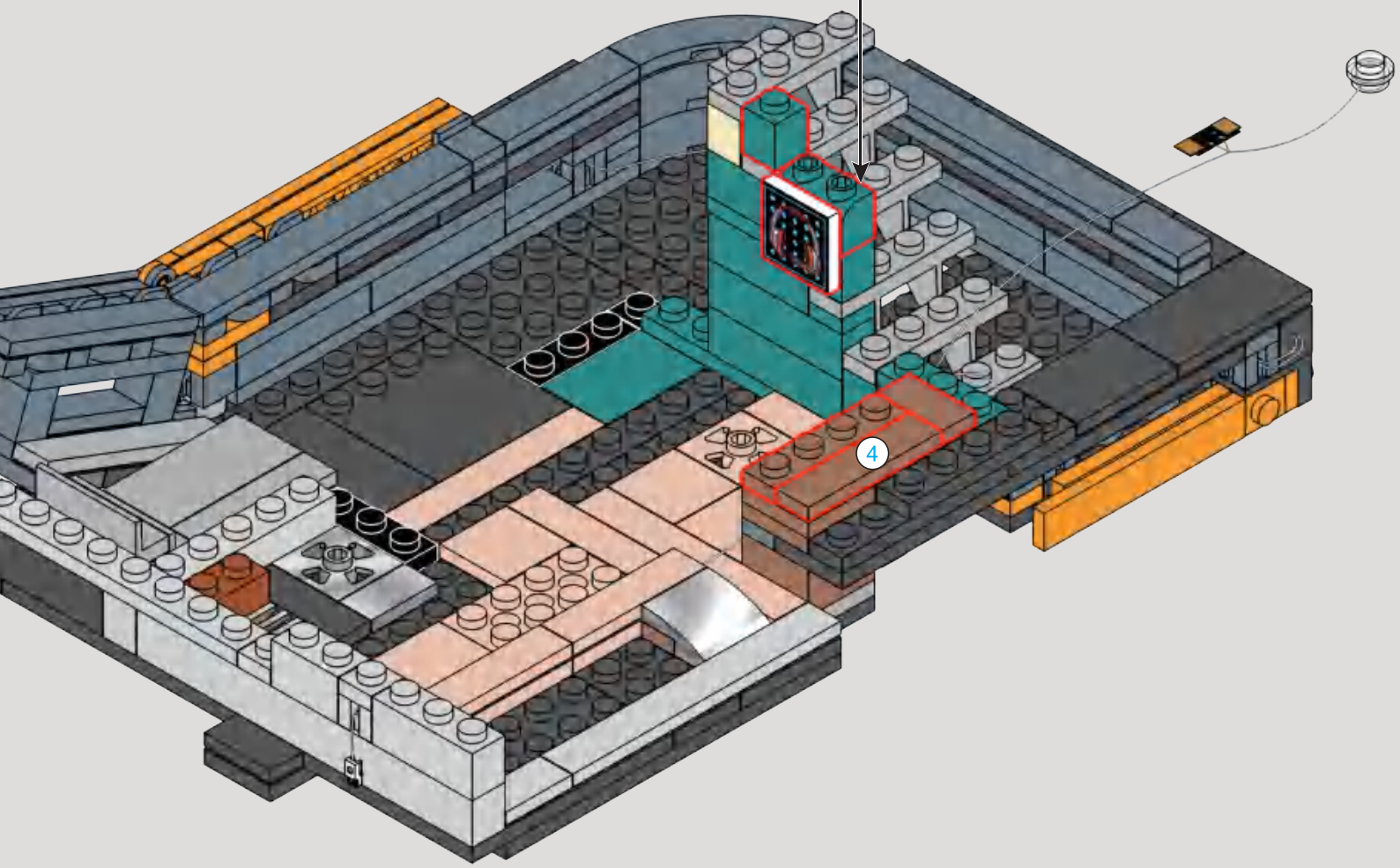

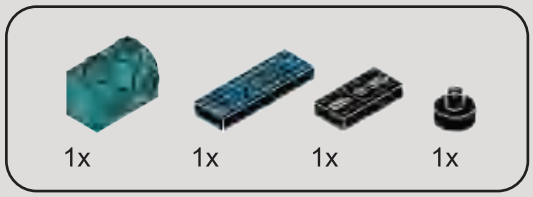

264

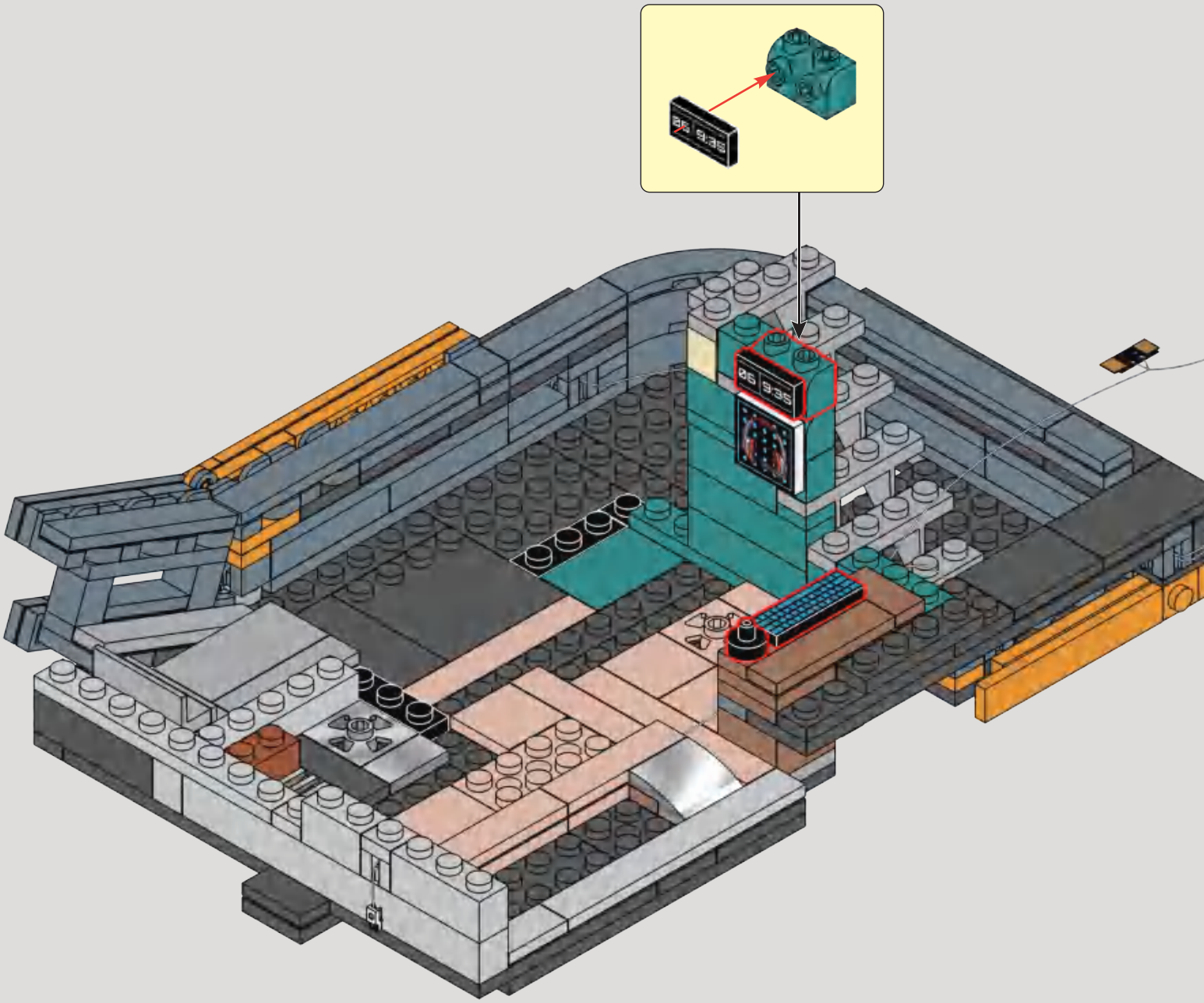

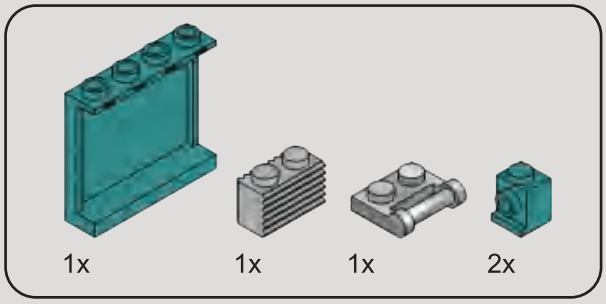

265

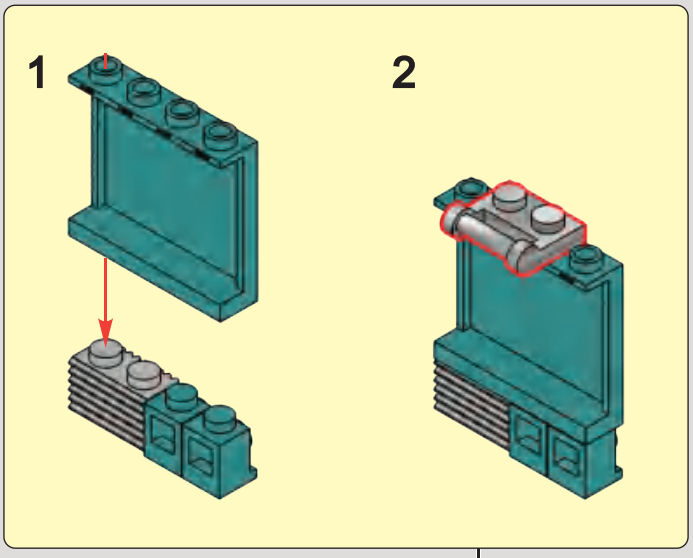

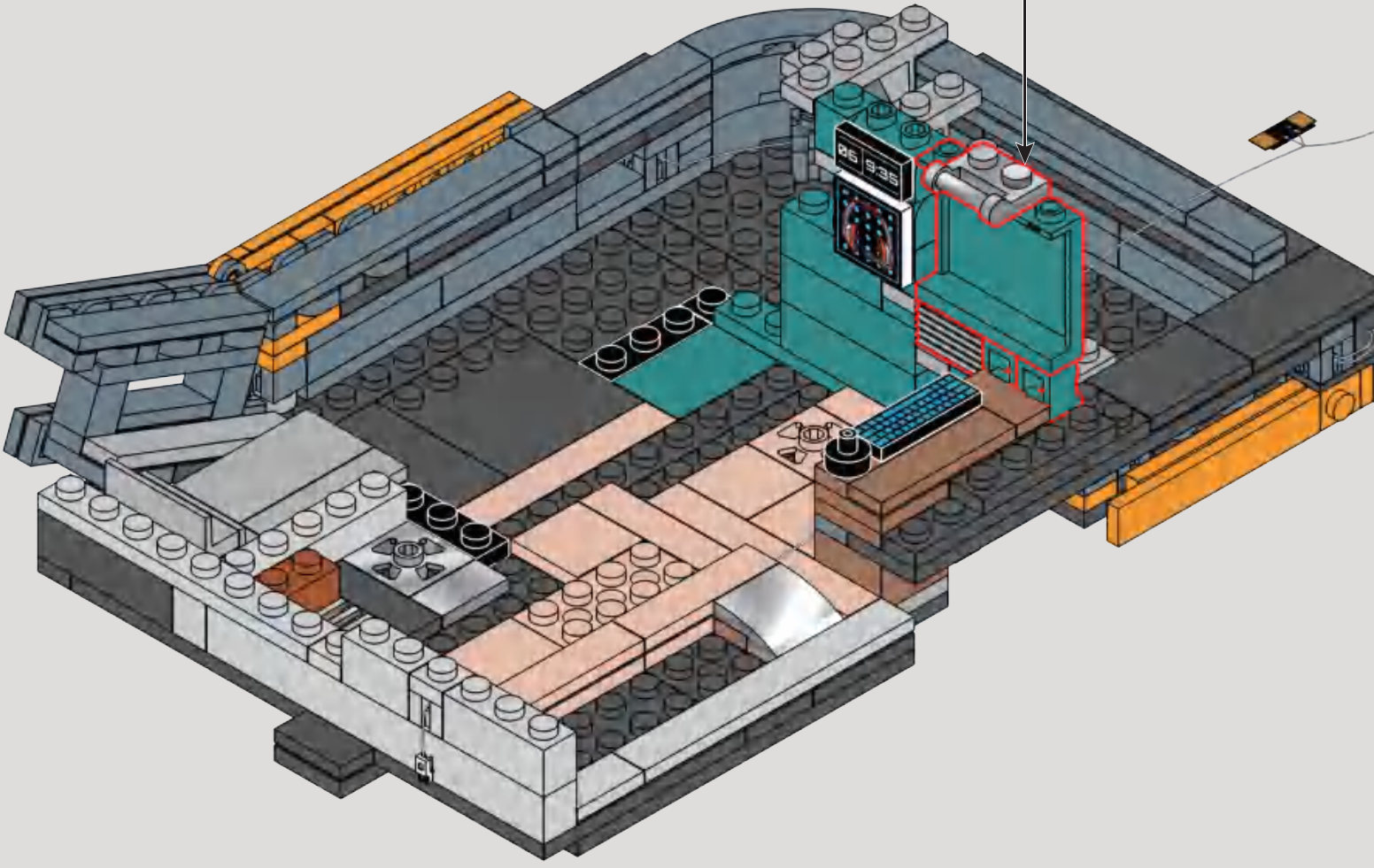

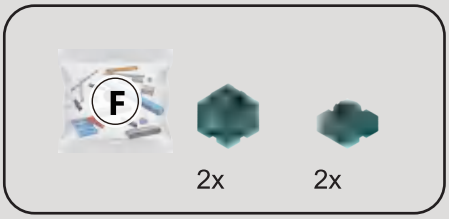

266

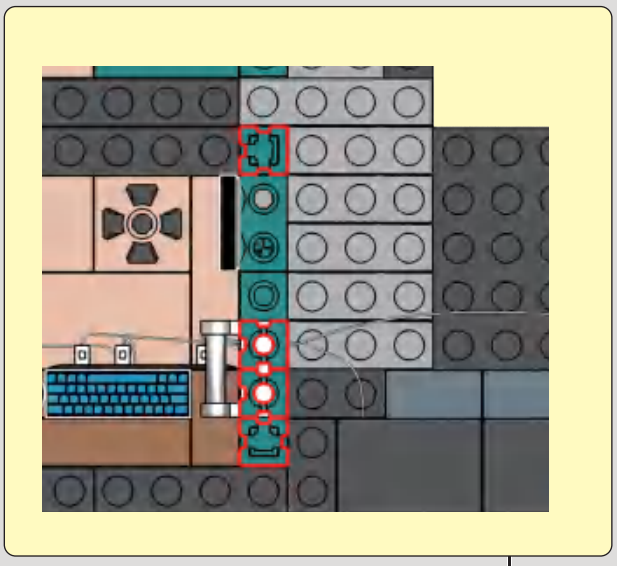

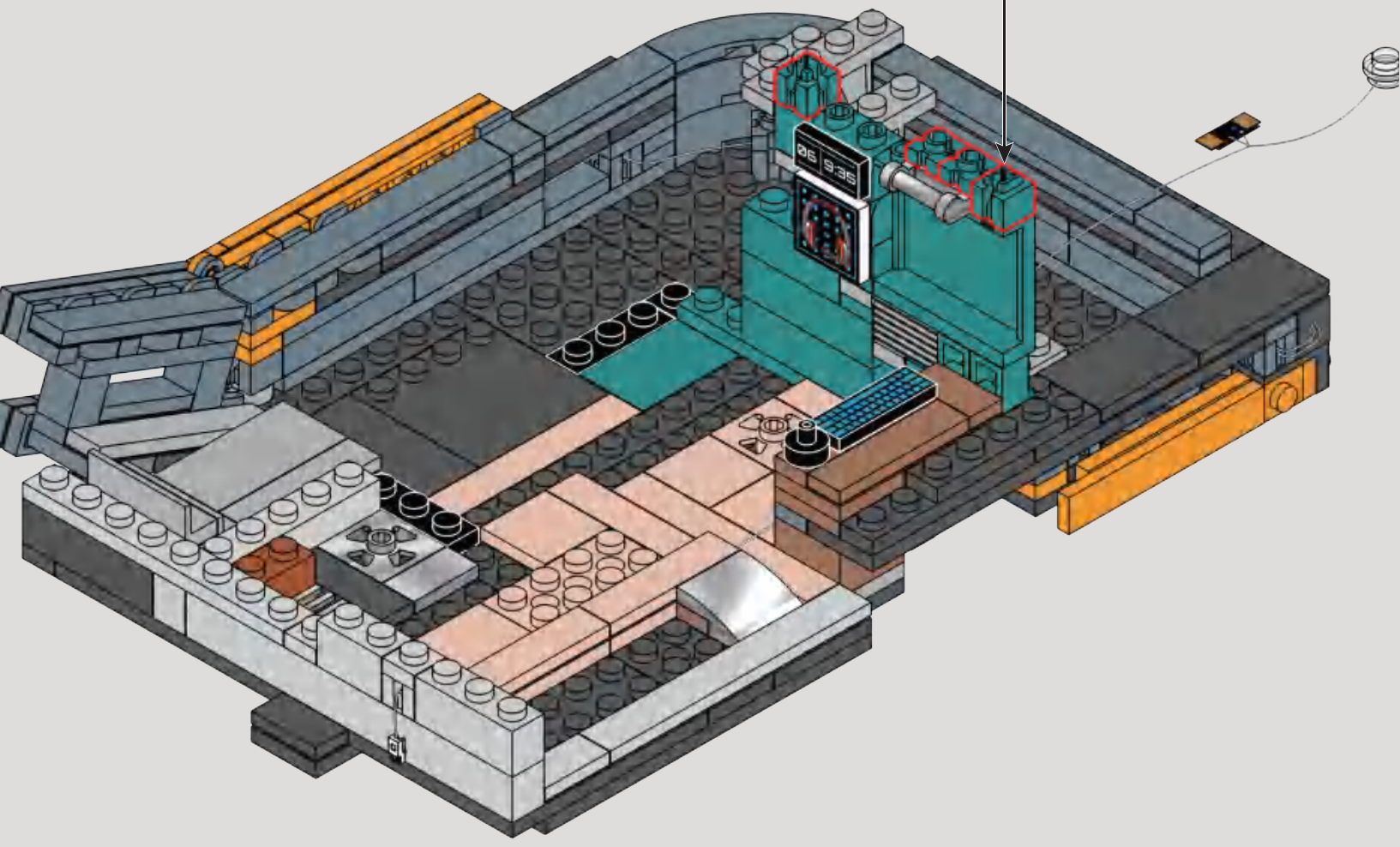

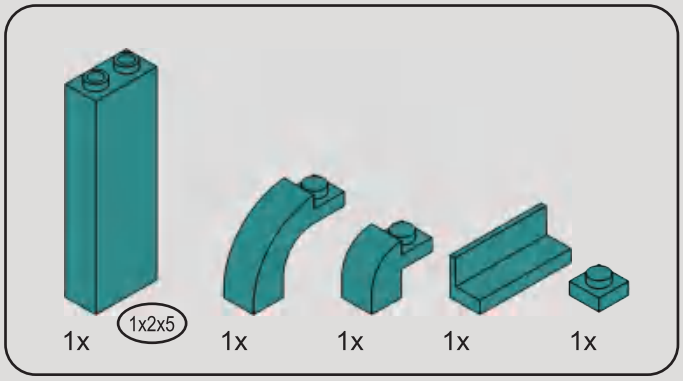

267

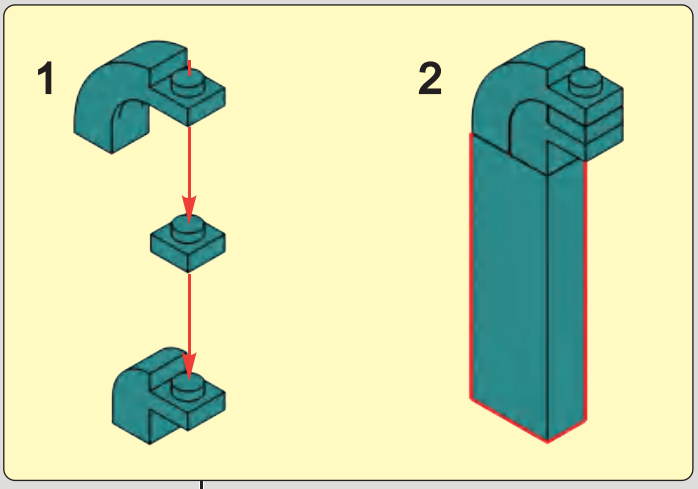

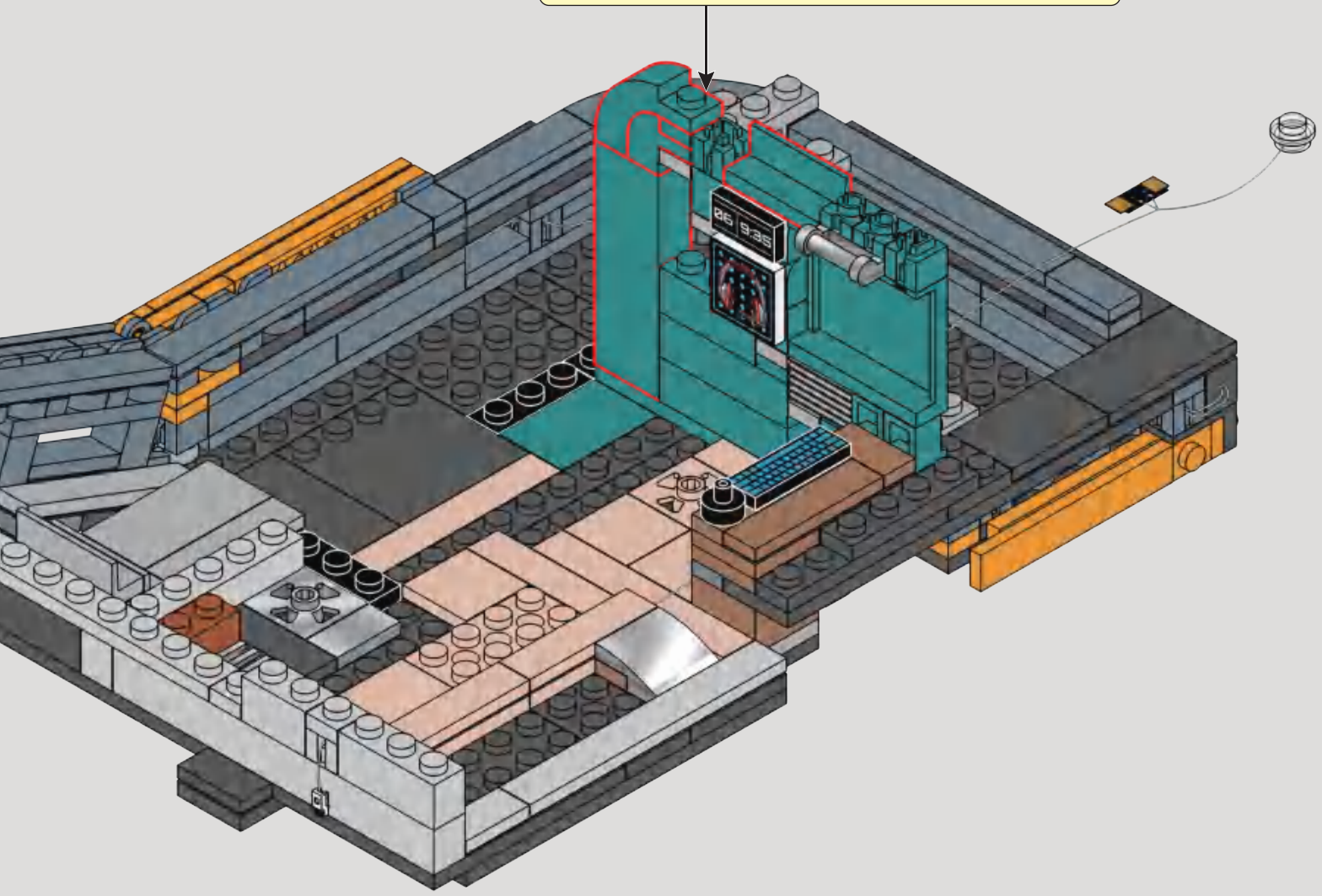

268

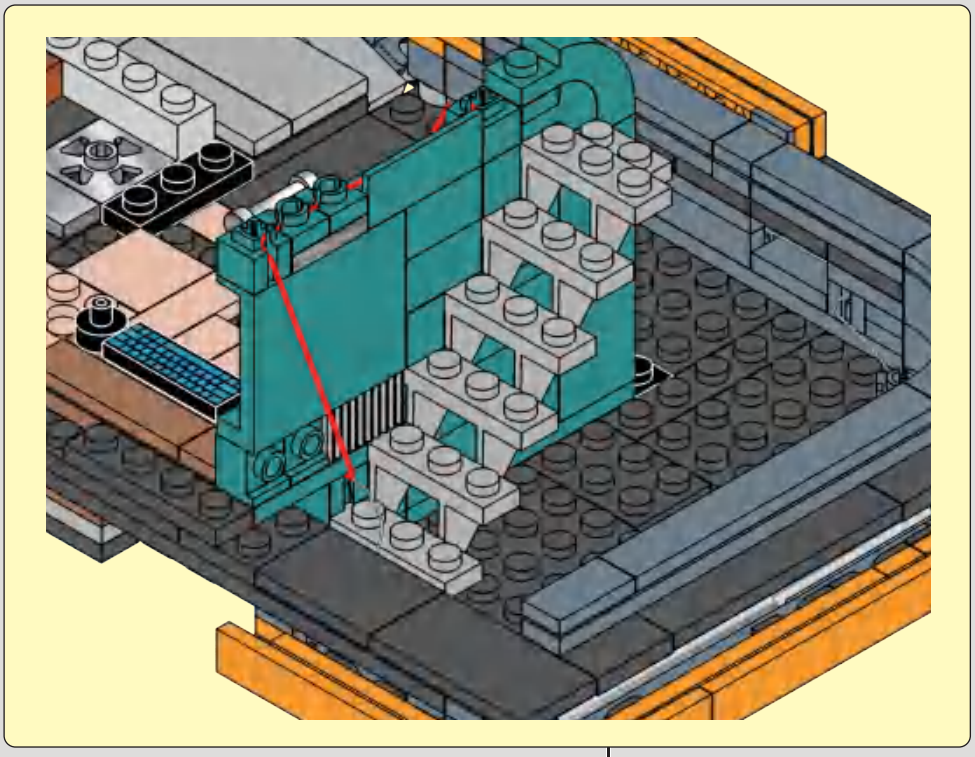

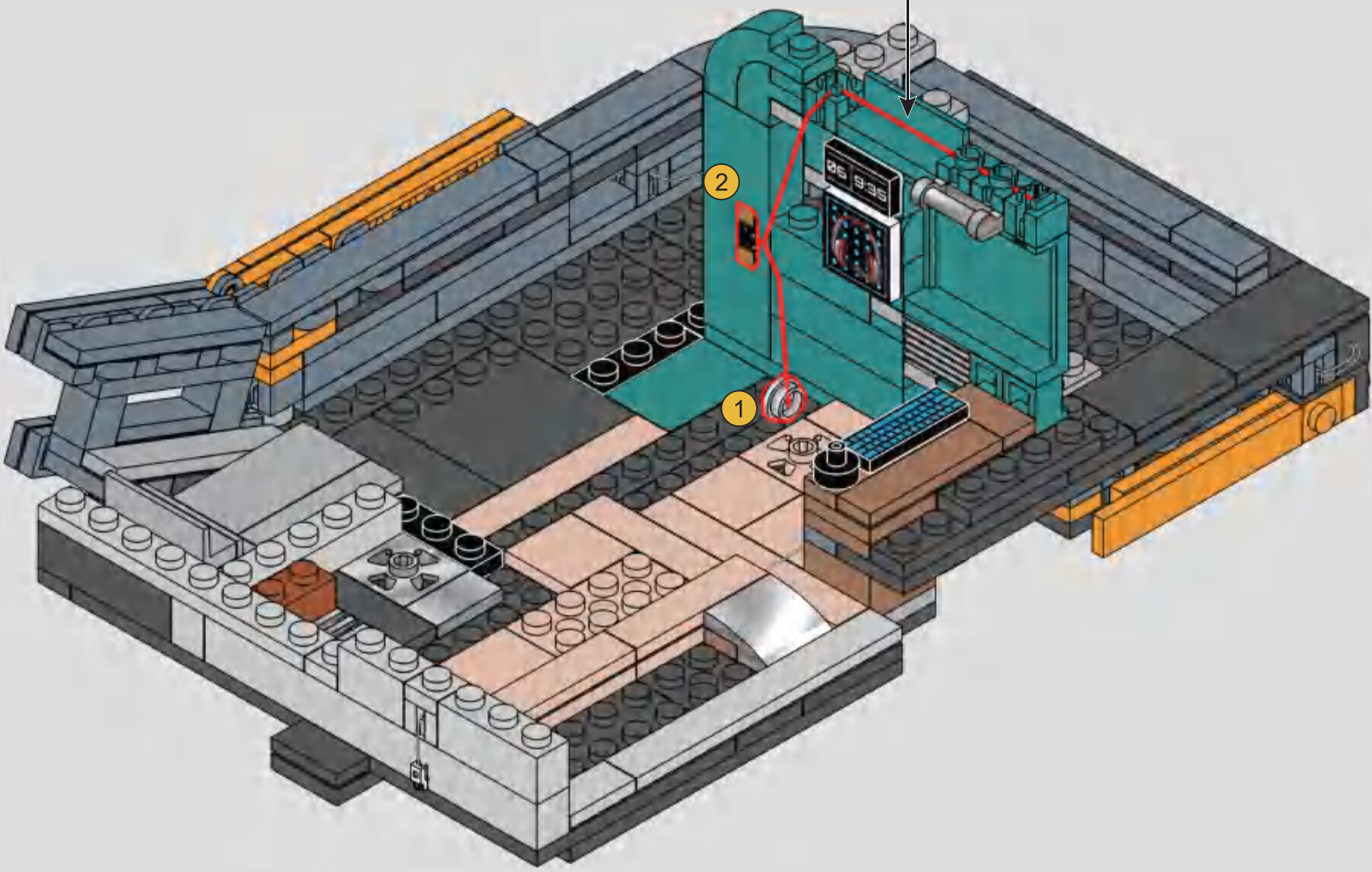

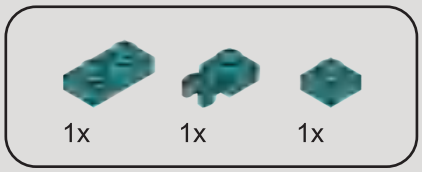

269

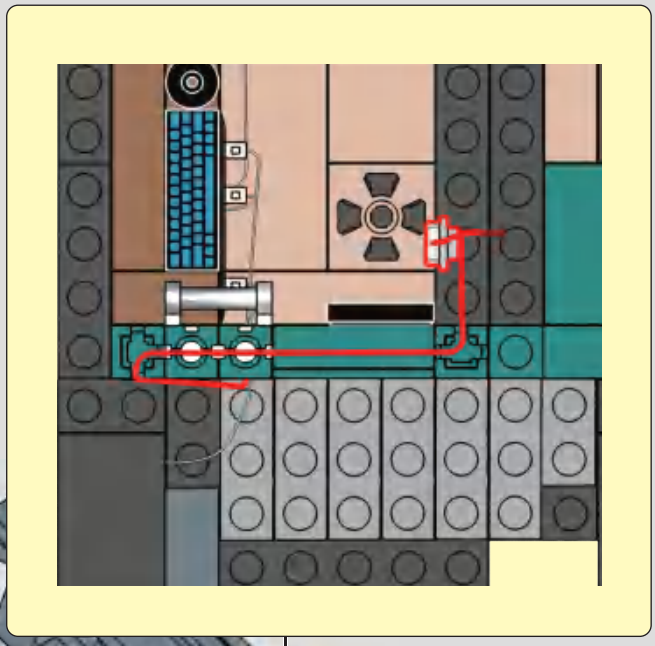

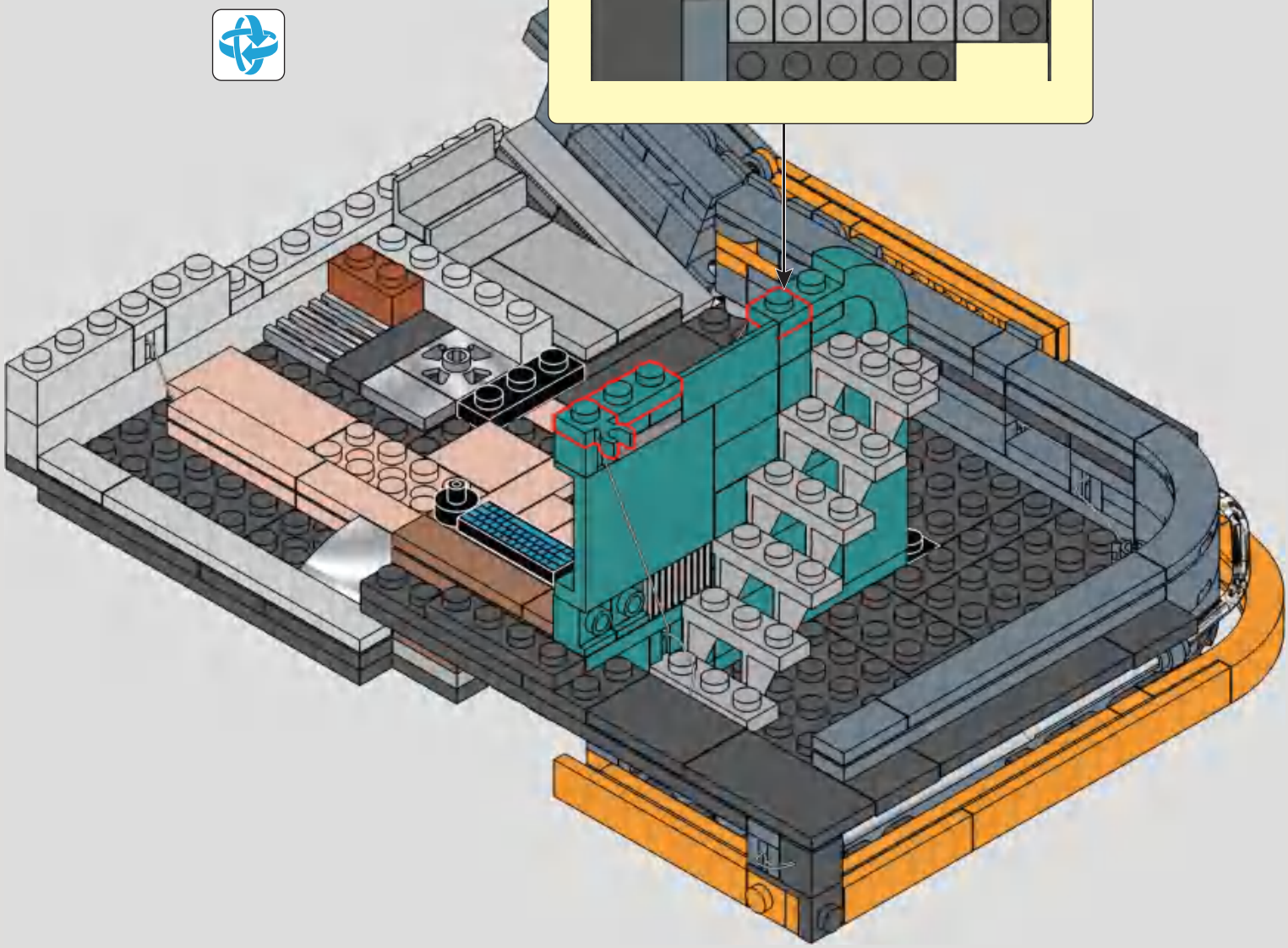

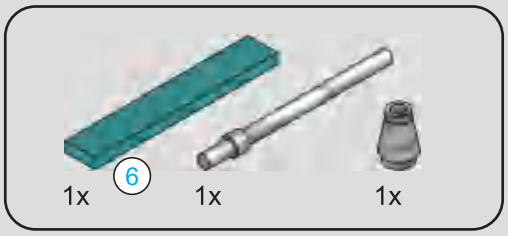

270

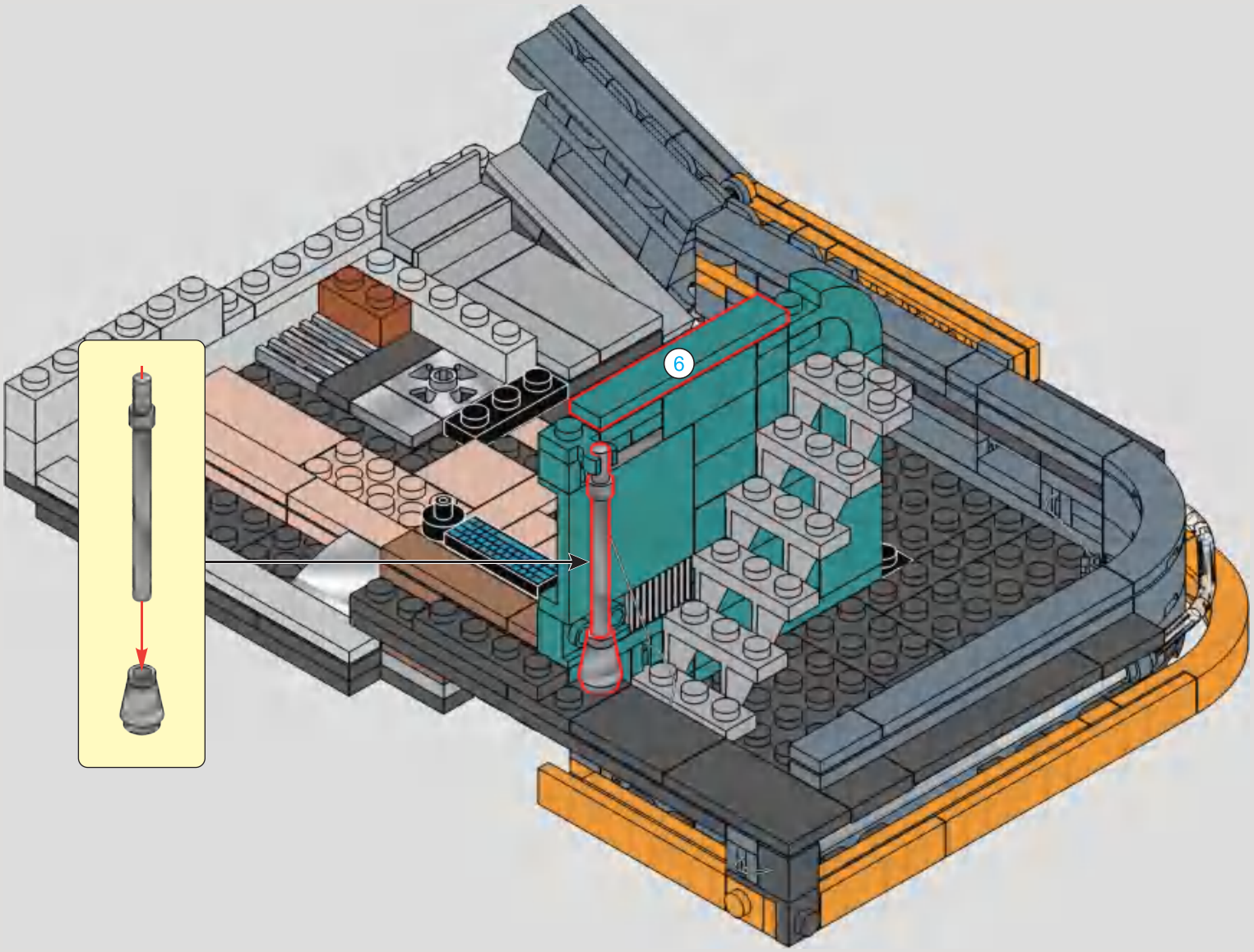

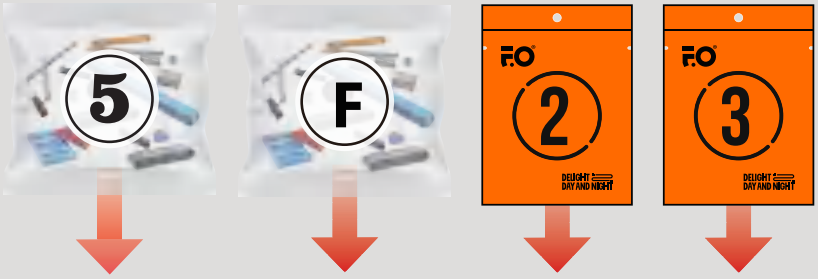
5
F
F.O
2
DELIGHT DAY AND NIGHT
F.O
3
DELIGHT DAY AND NIGHT

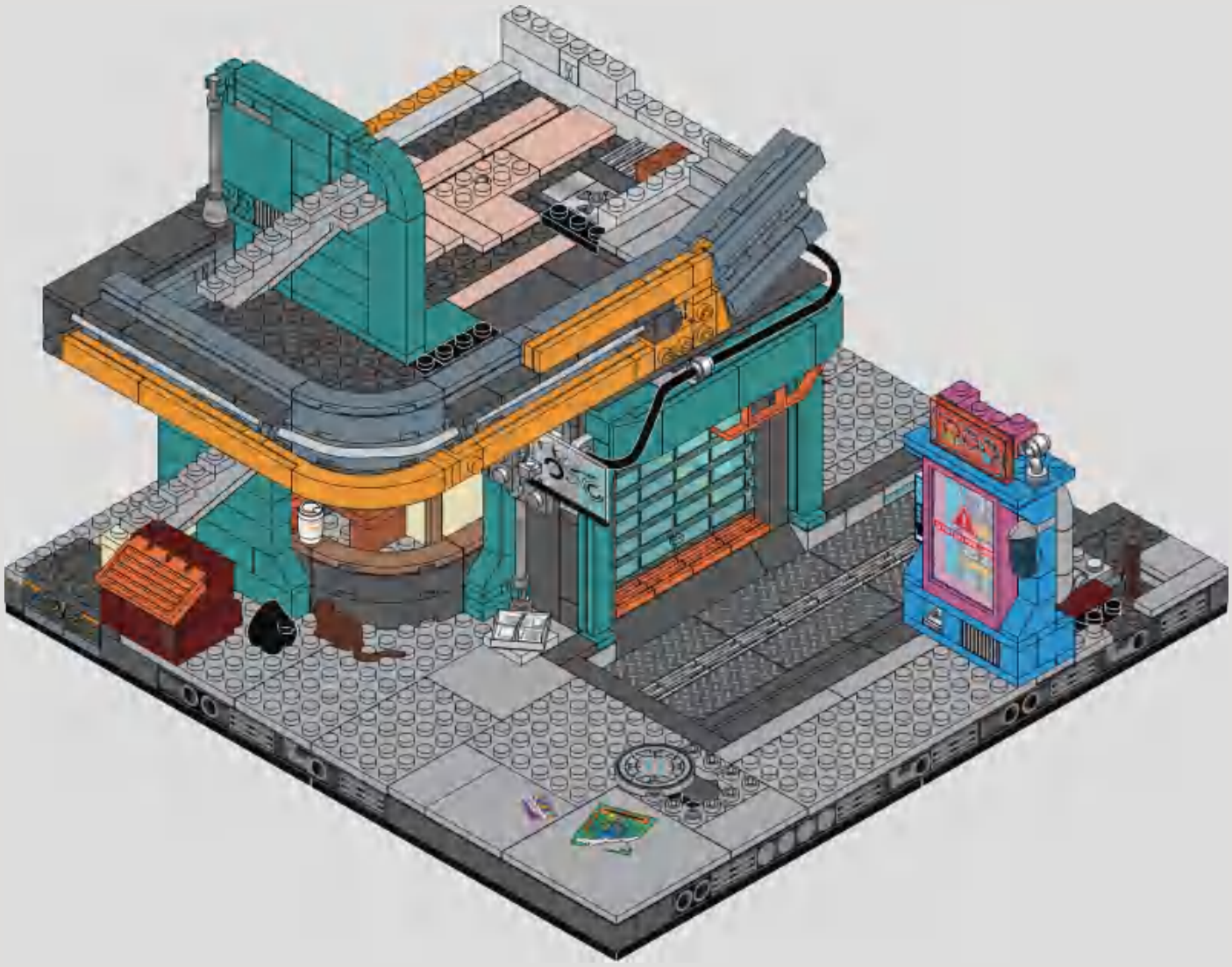

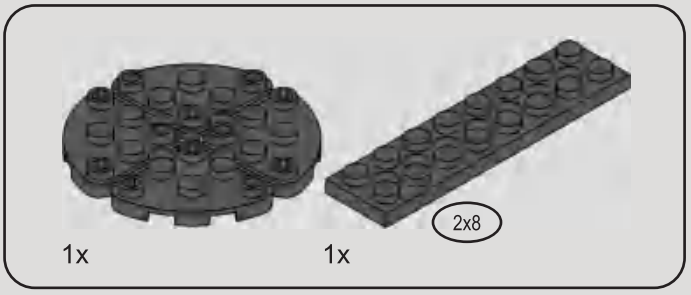

271

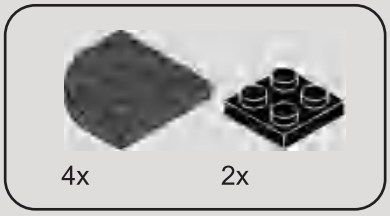

272

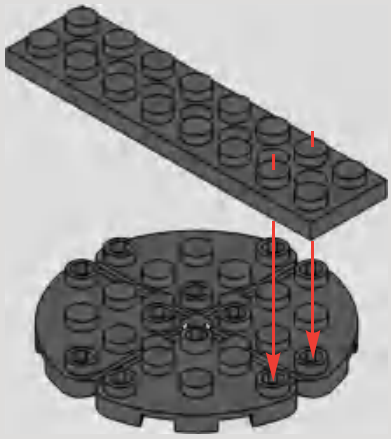

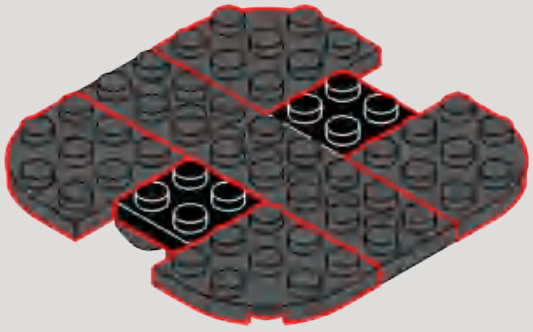

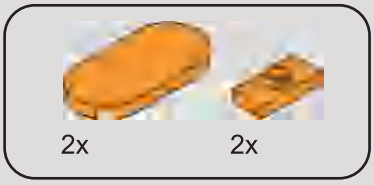

273

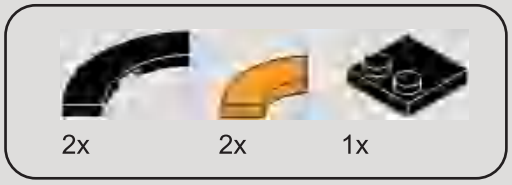

274

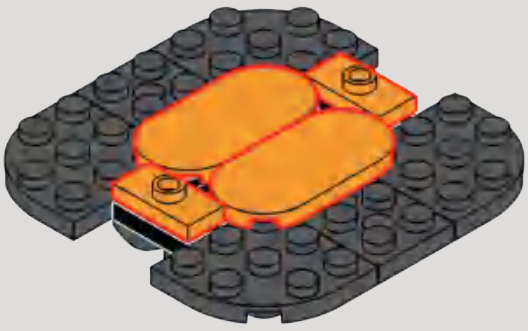

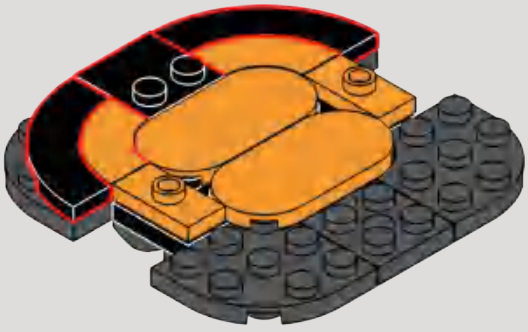

275

1

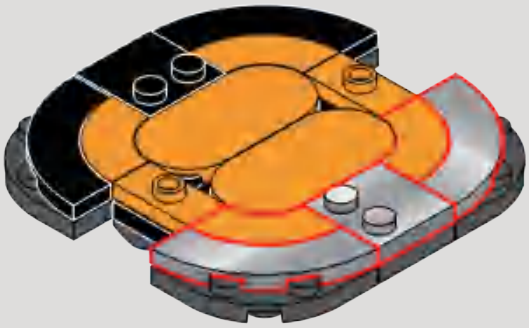

2

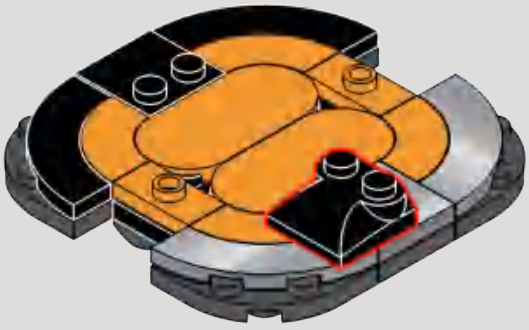

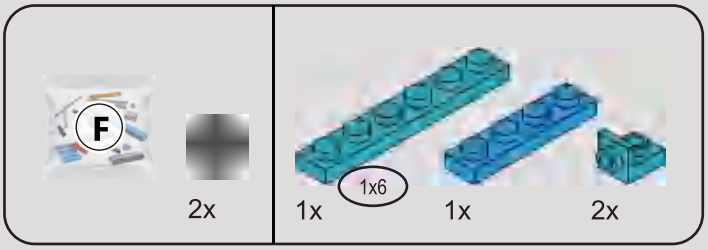

276

1

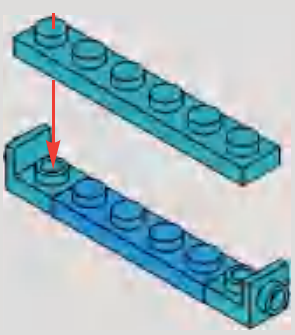

2

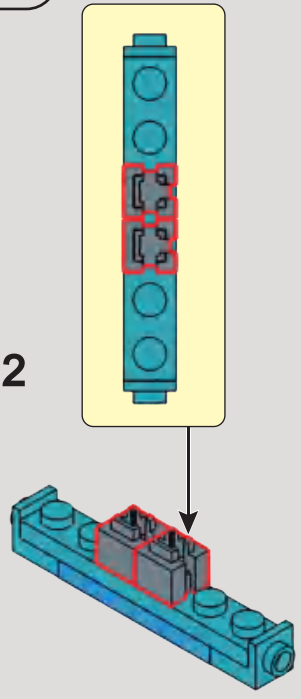

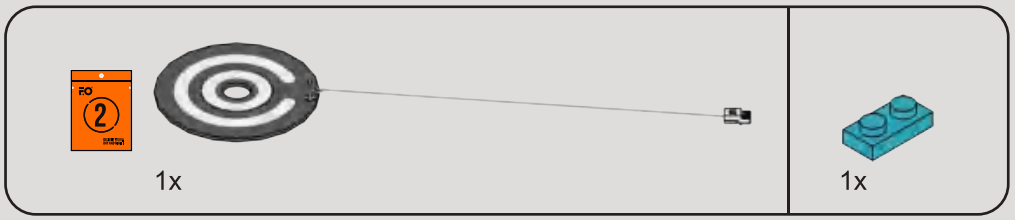

277

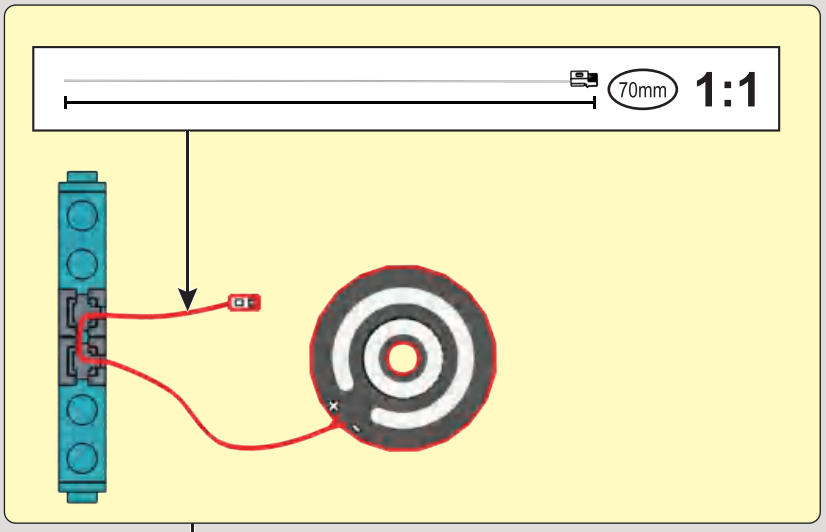

1

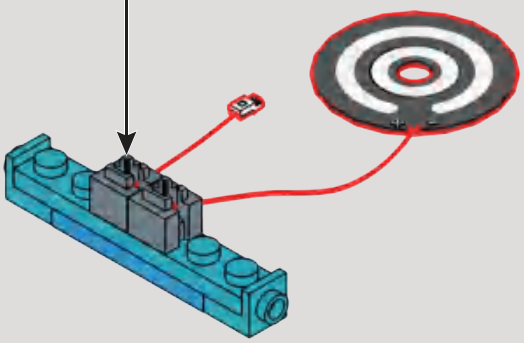

2

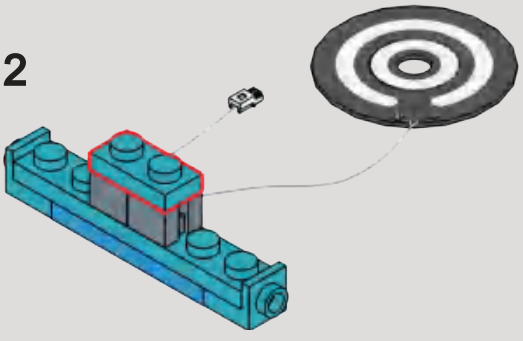

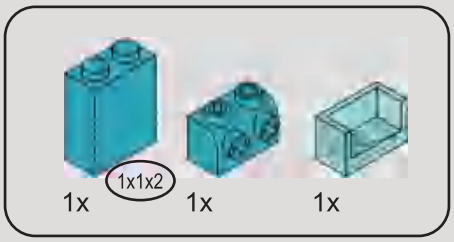

278

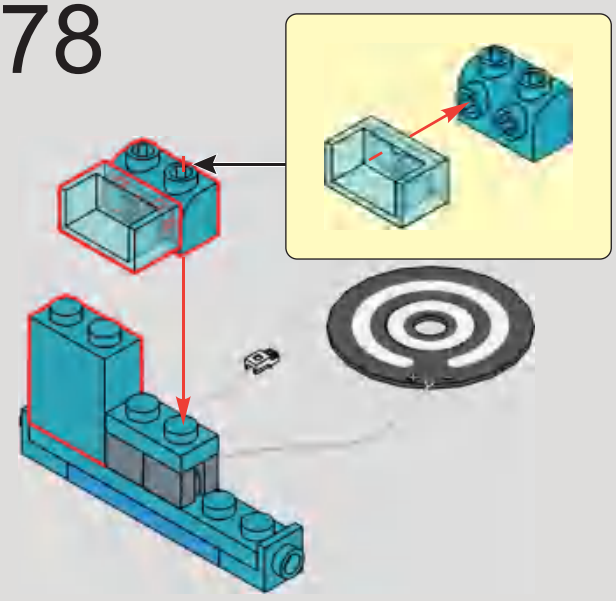

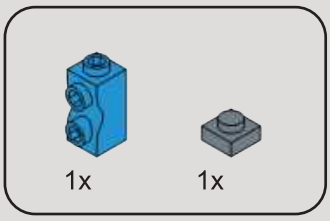

279

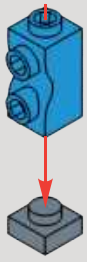

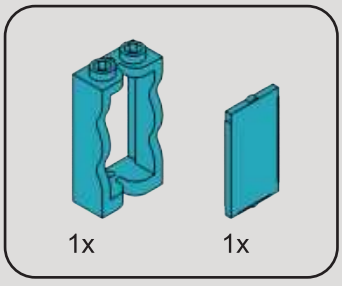

280

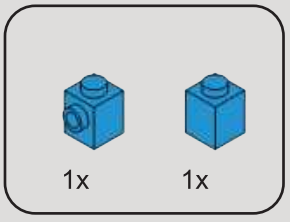

281

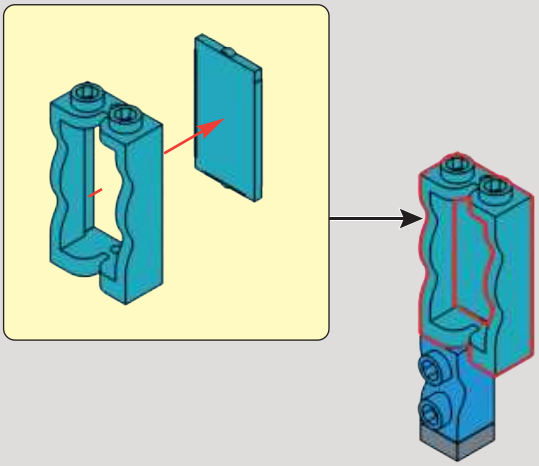

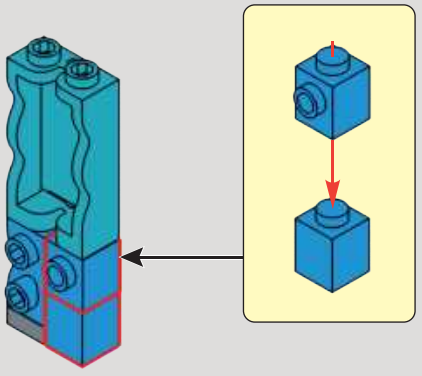

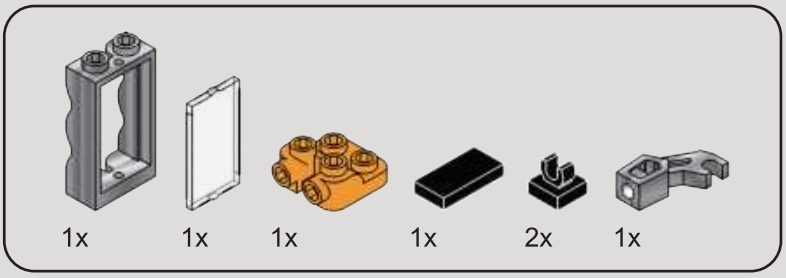

282

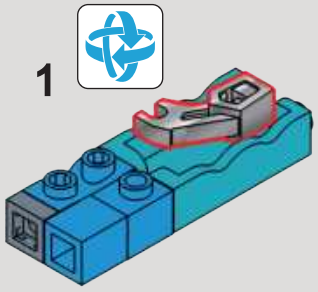

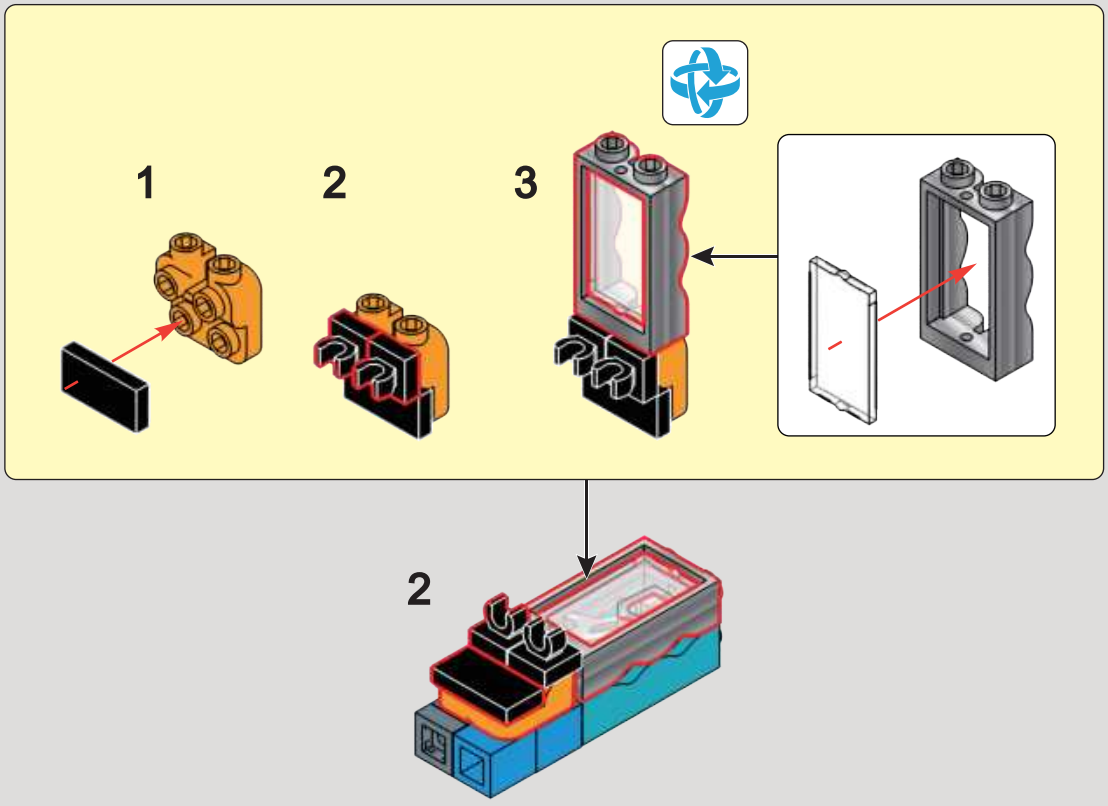

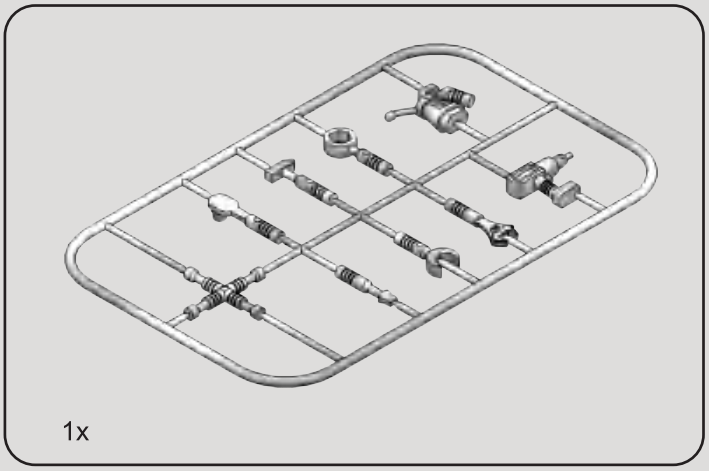

283

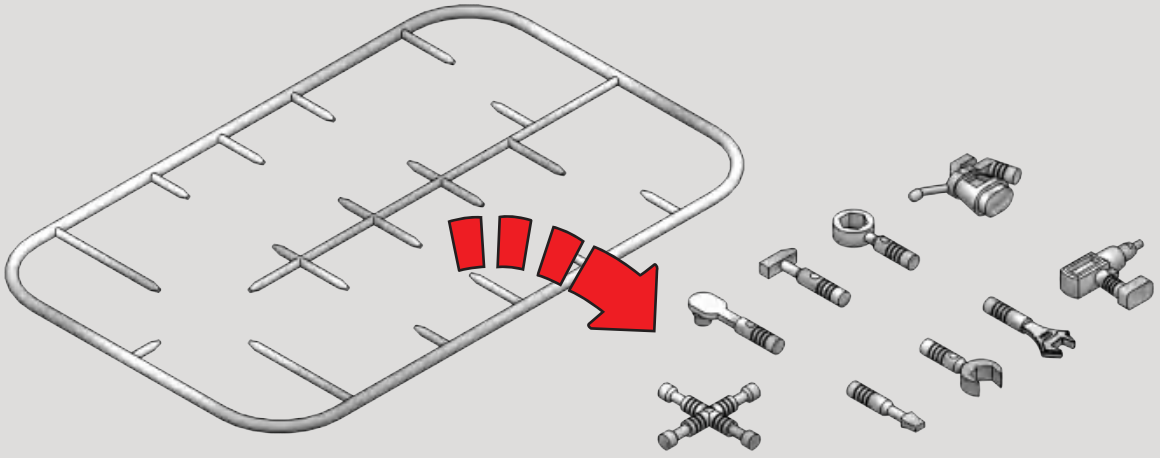

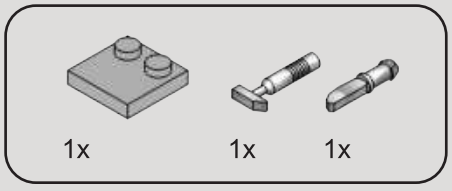

284

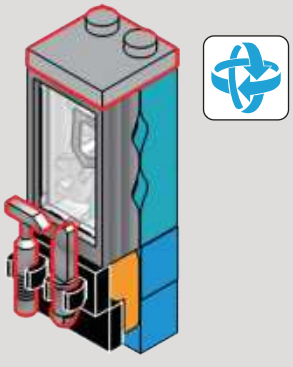

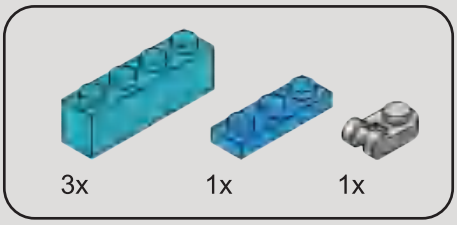

285

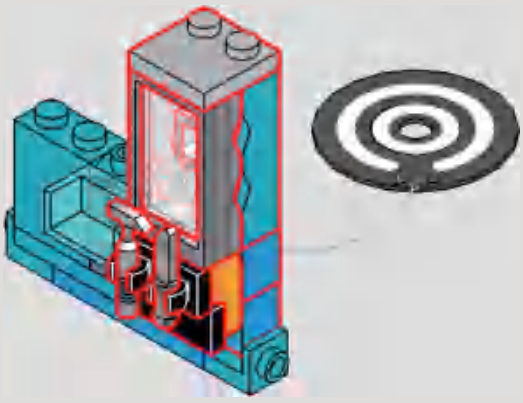

286

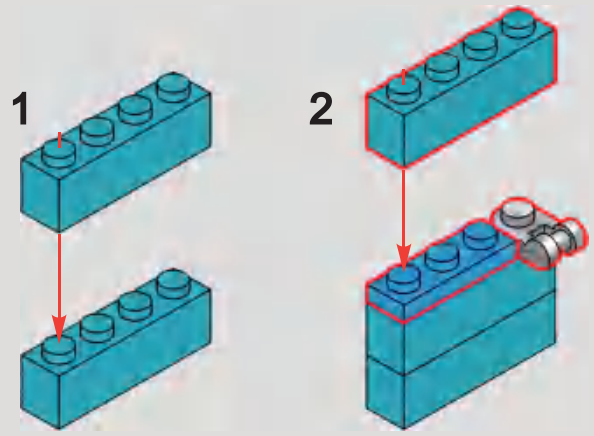

287

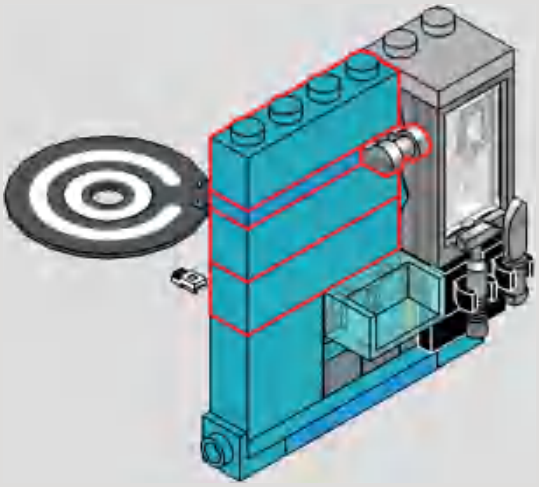

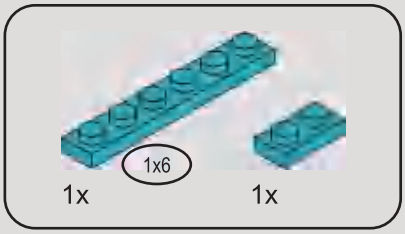

288

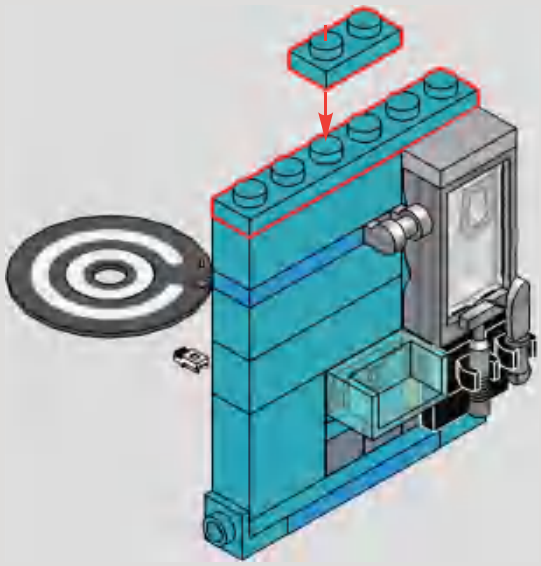

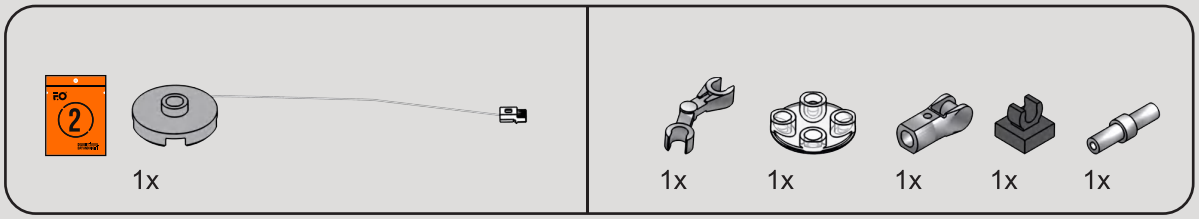

289

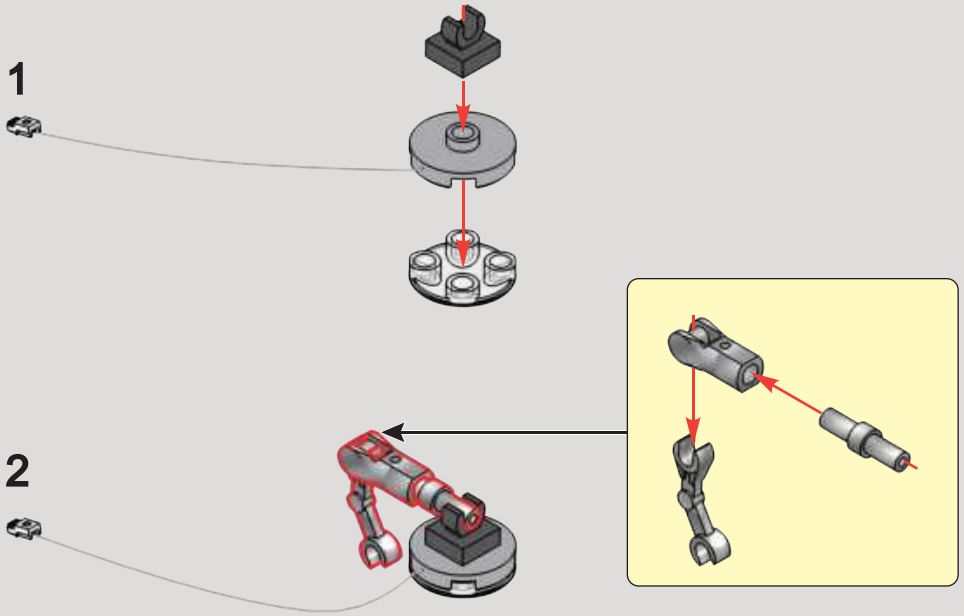

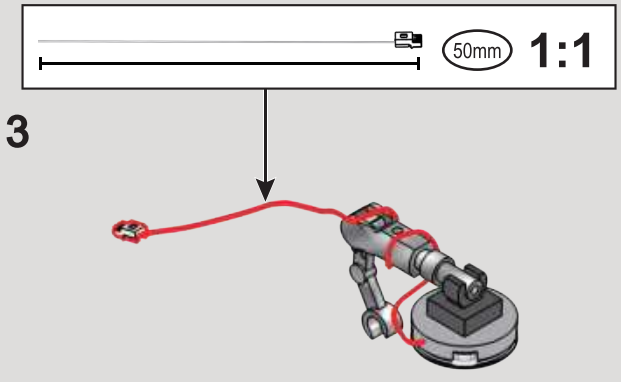

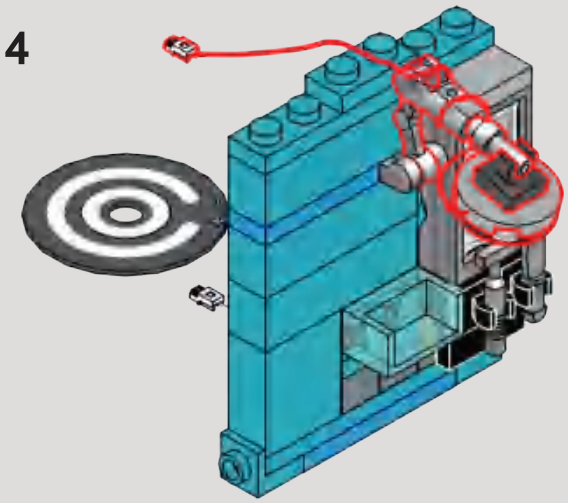

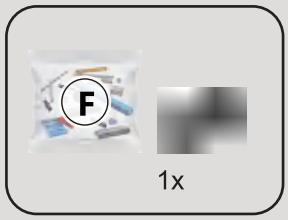

290

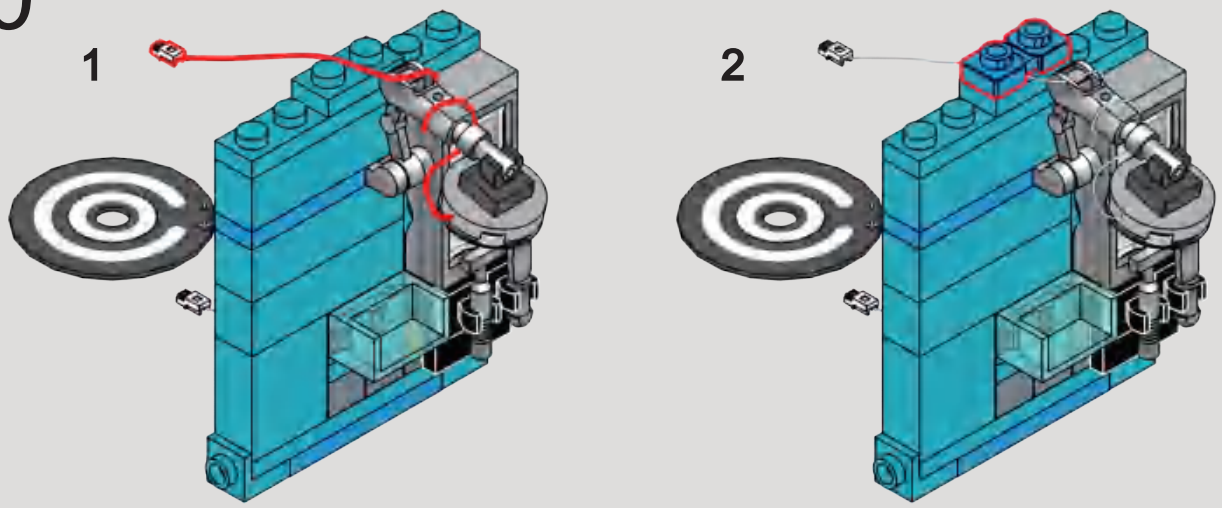

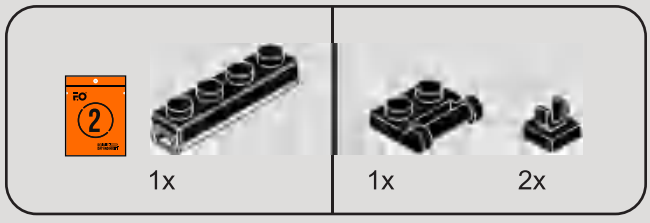

291

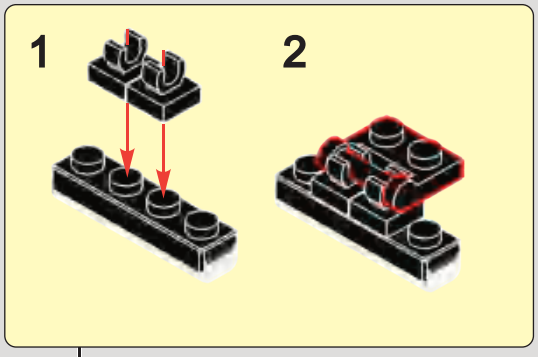

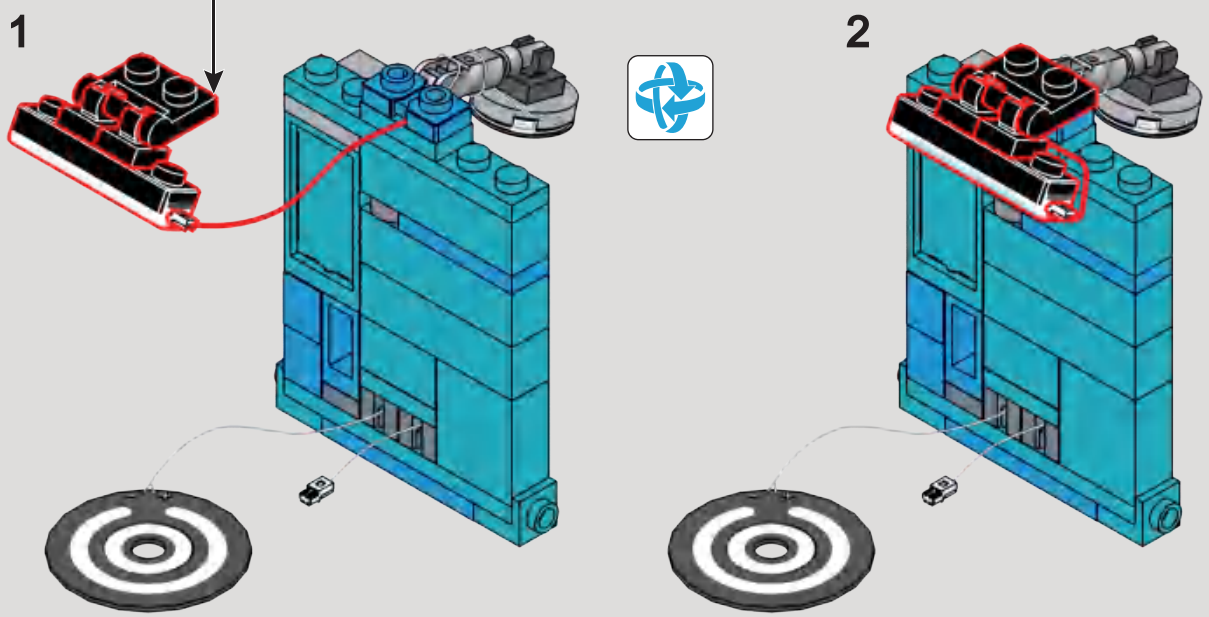

292

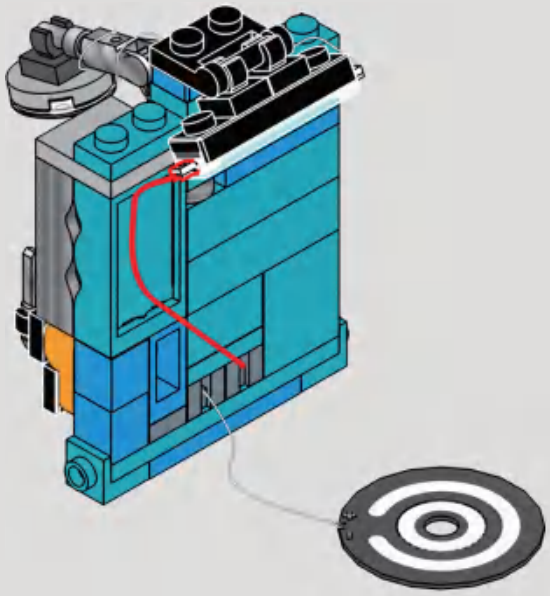

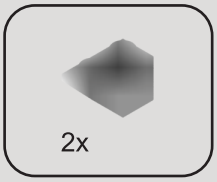

293

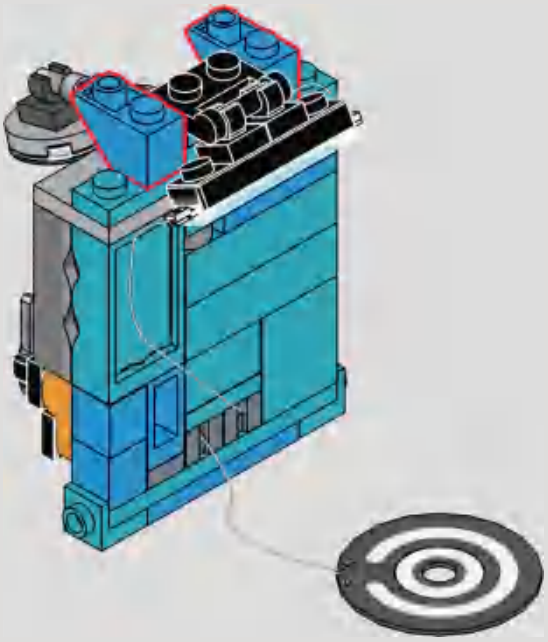

294

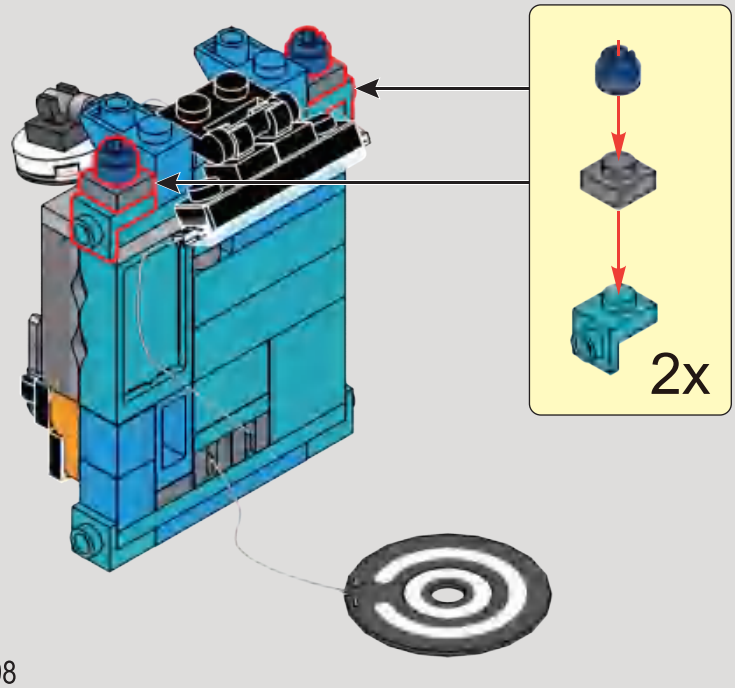

295

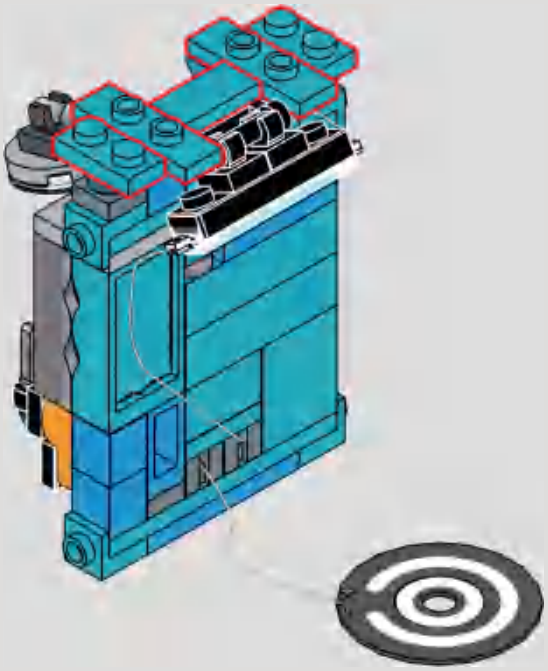

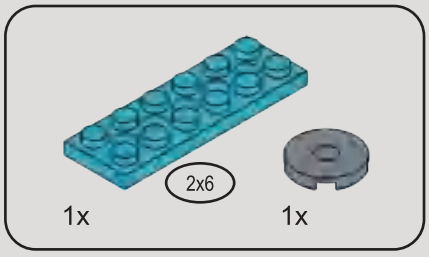

296

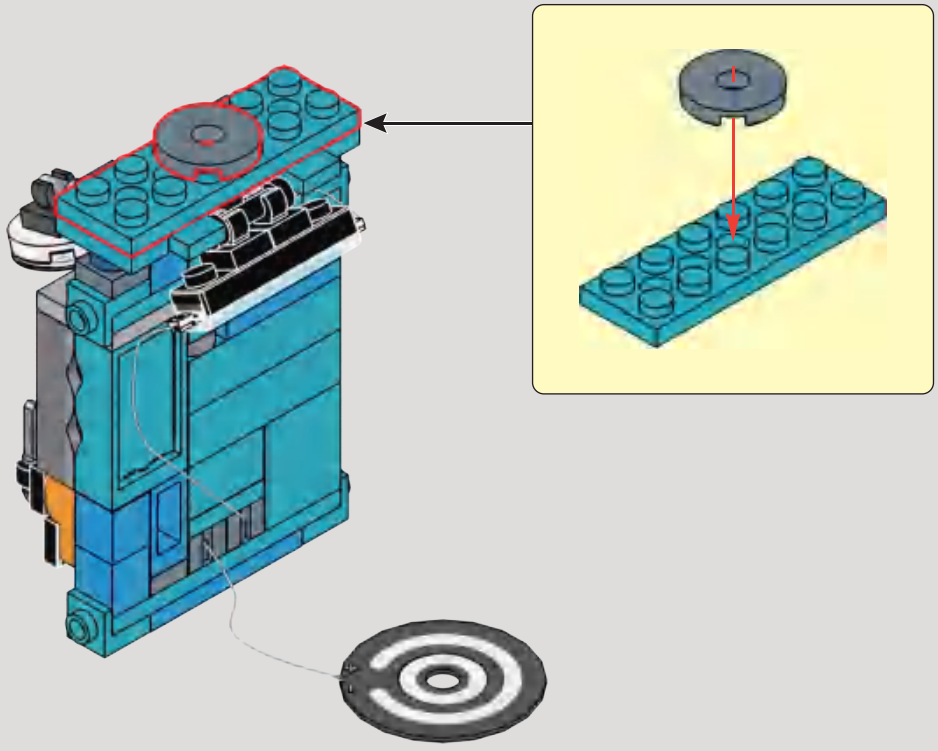

297

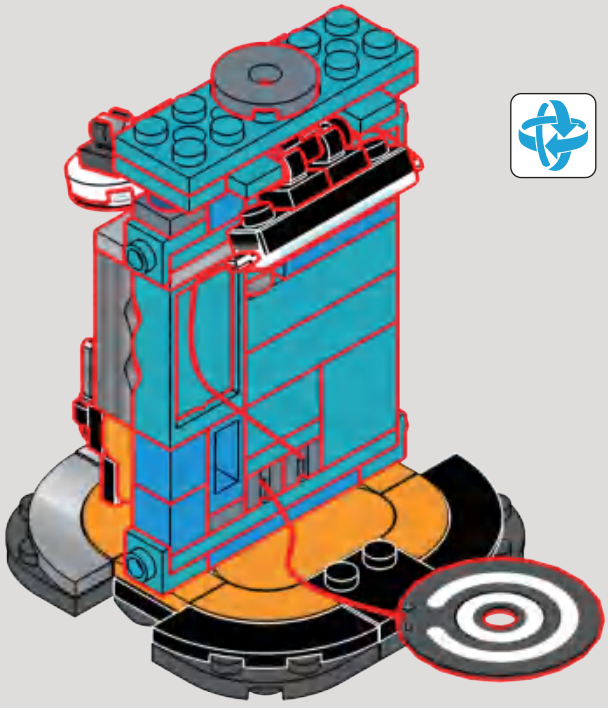

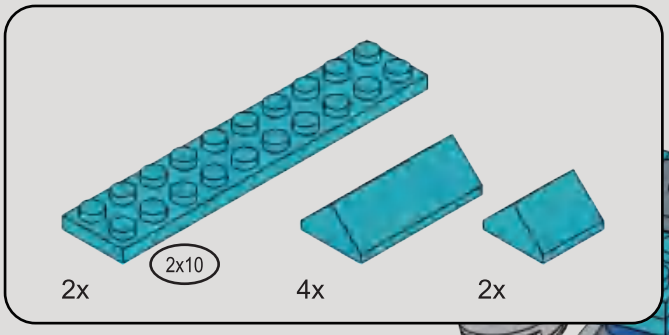

298

1

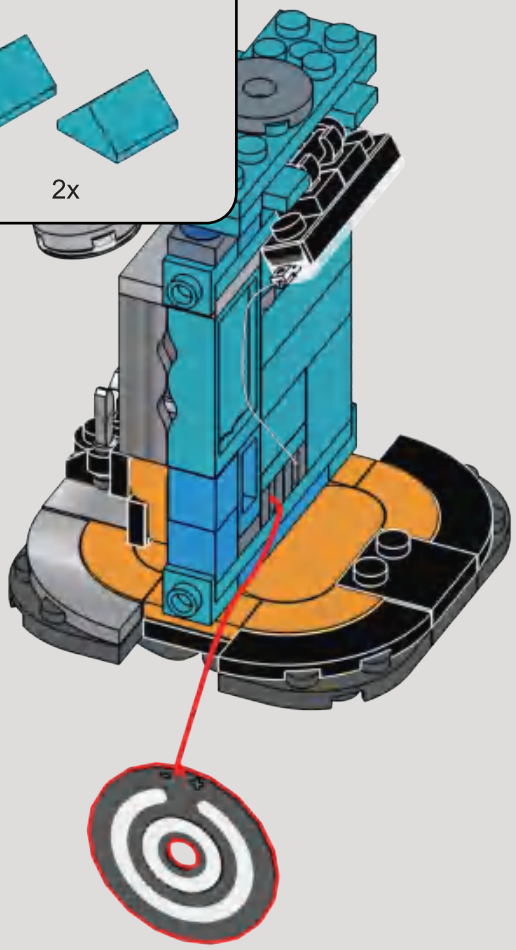

2

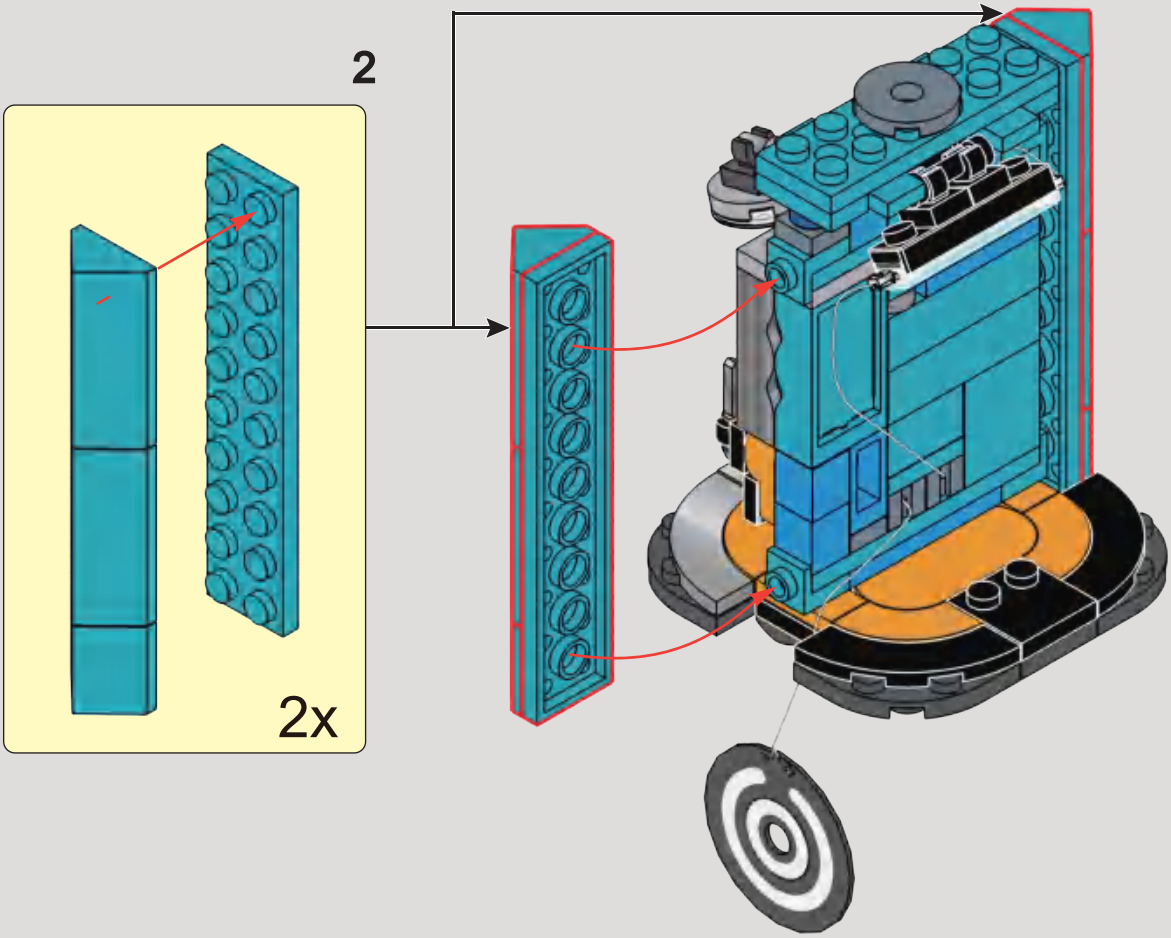

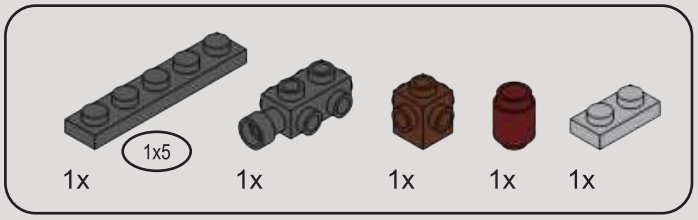

299

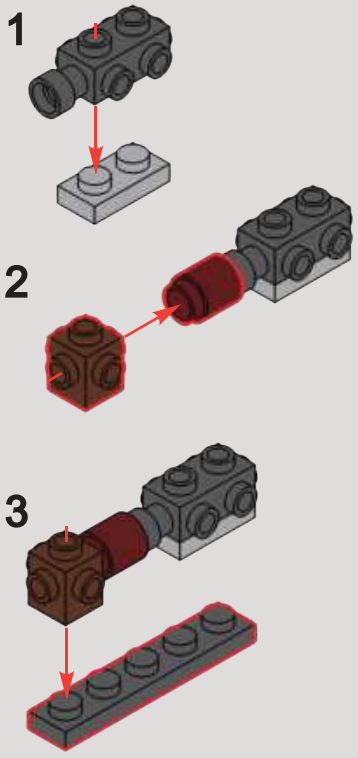

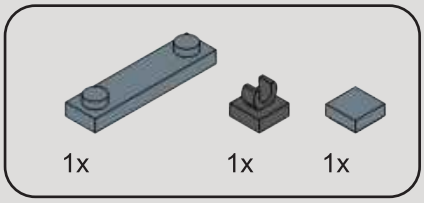

300

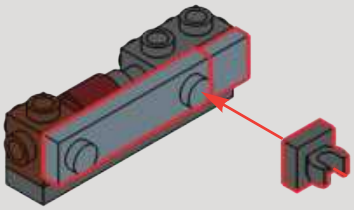

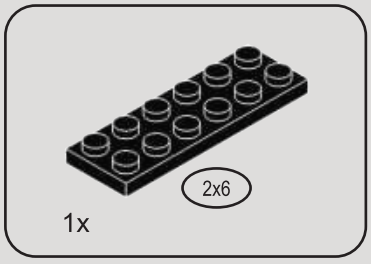

301

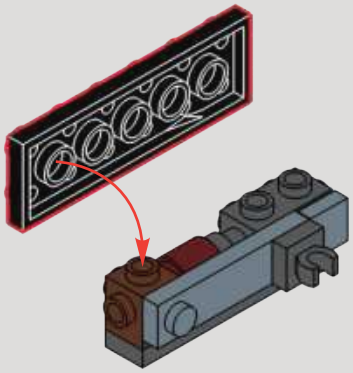

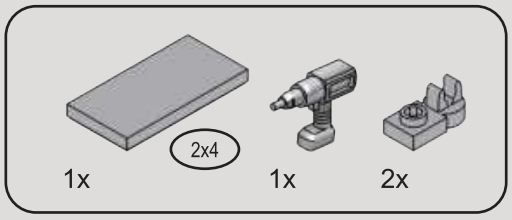

302

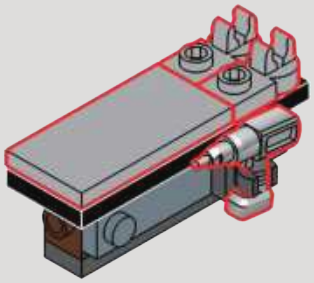

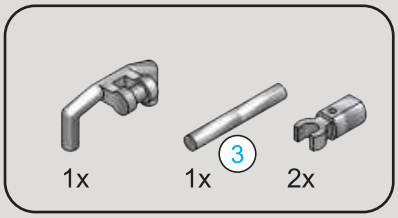

303

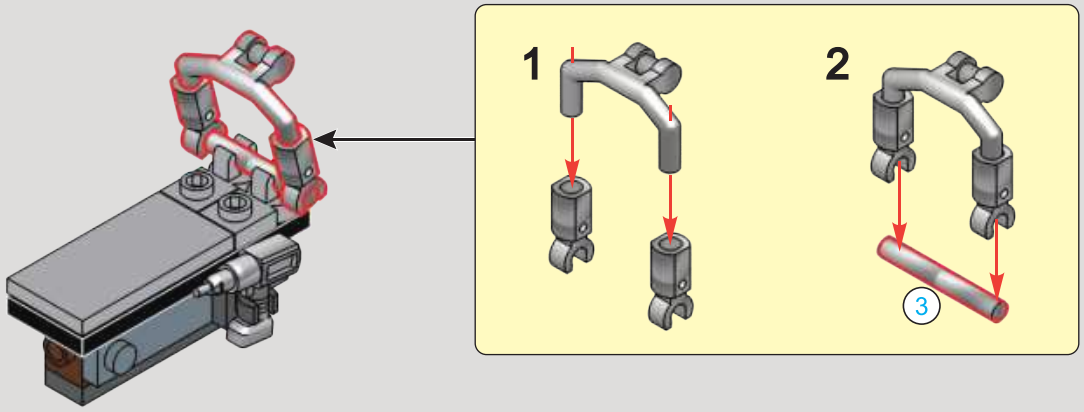

304

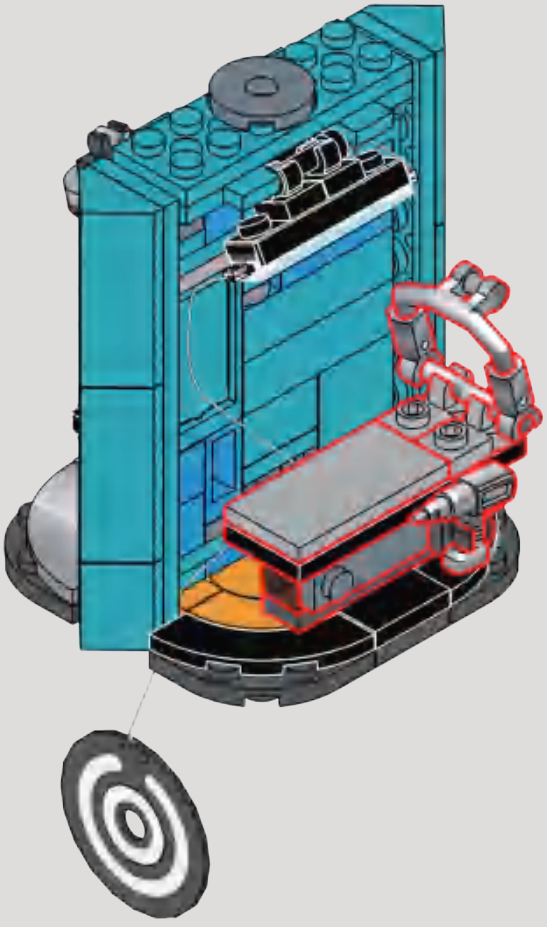

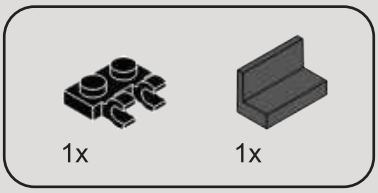

305

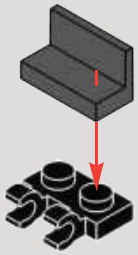

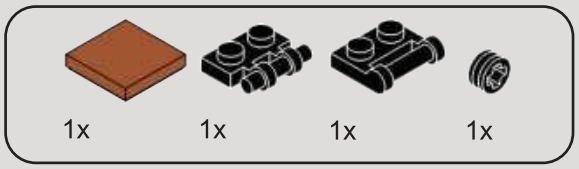

306

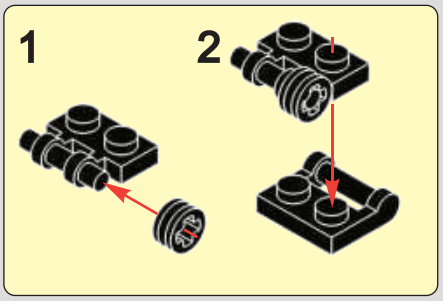

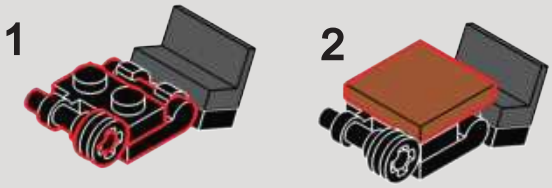

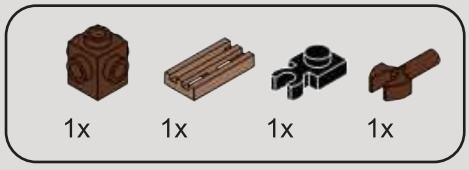

307

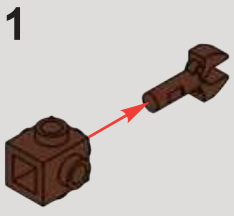

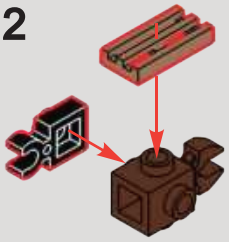

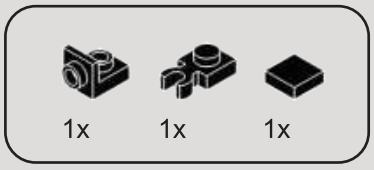

308

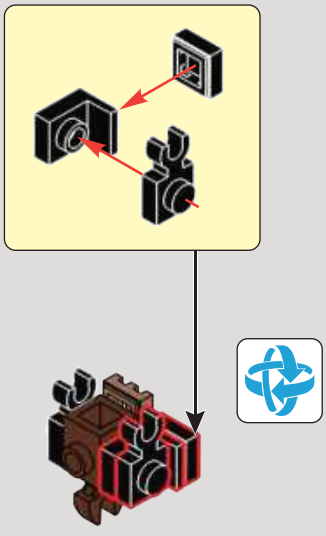

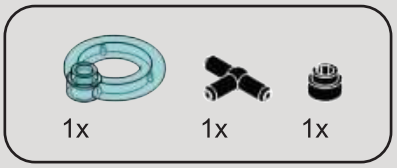

309

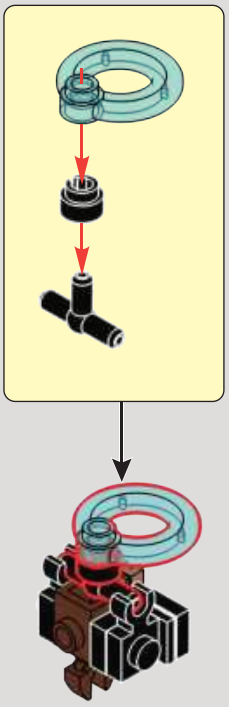

310

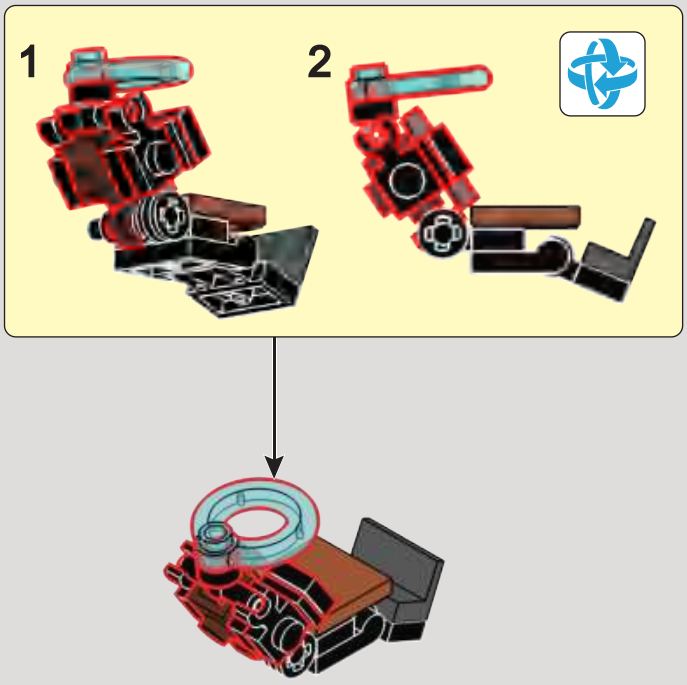

311

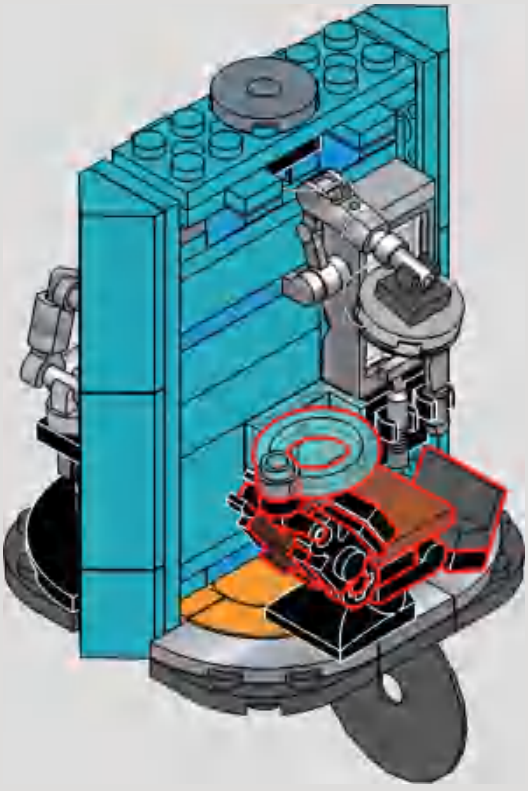

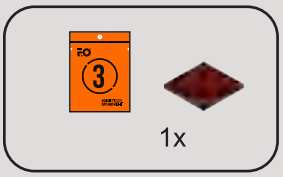

312

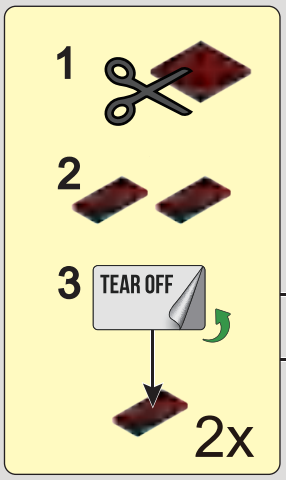

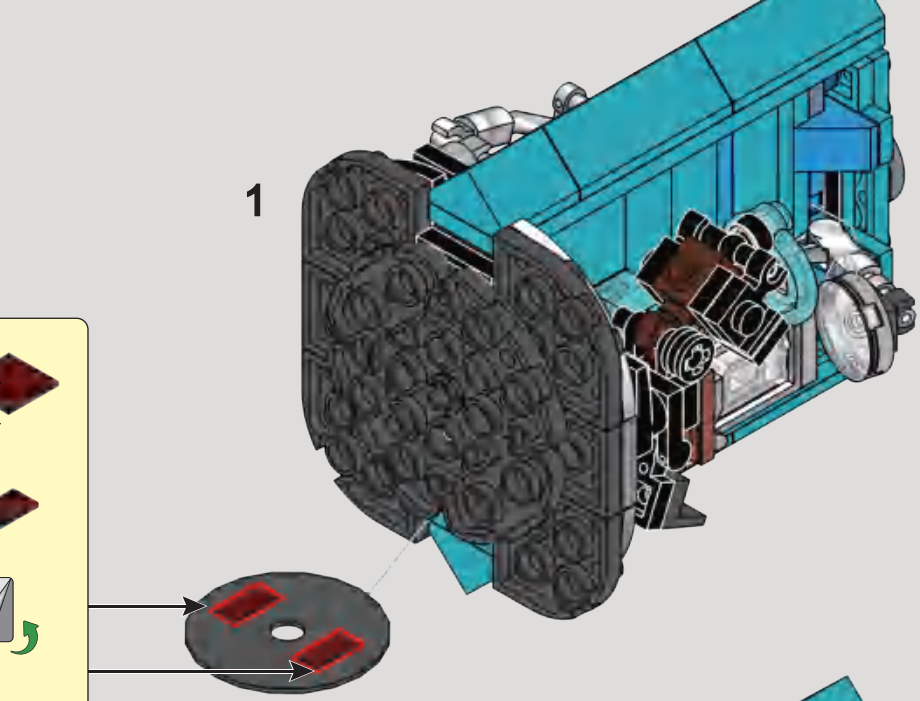

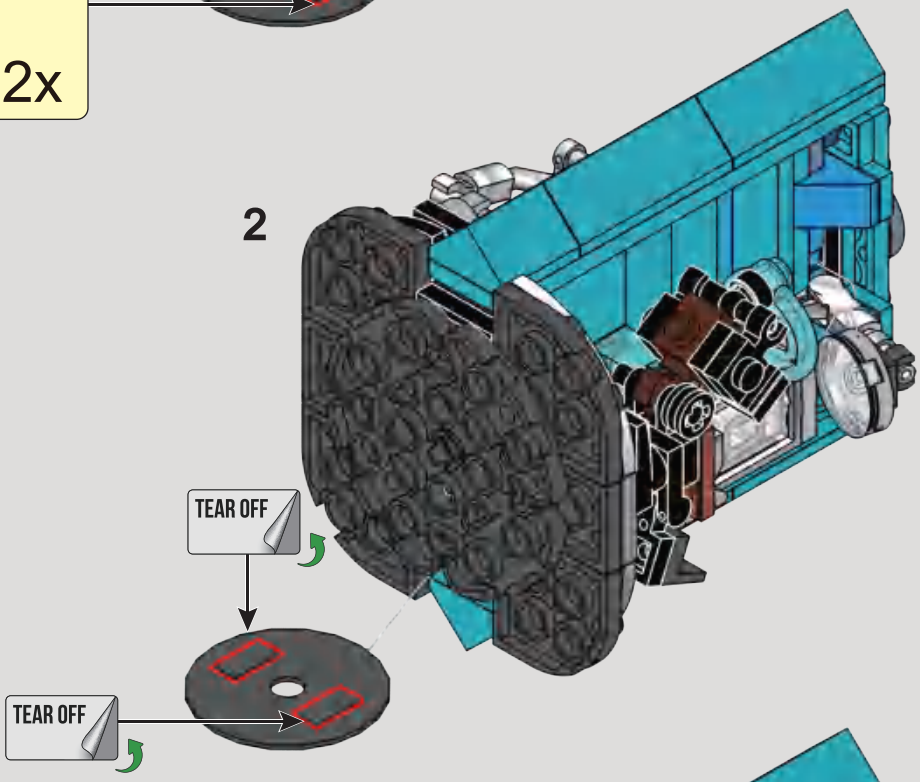

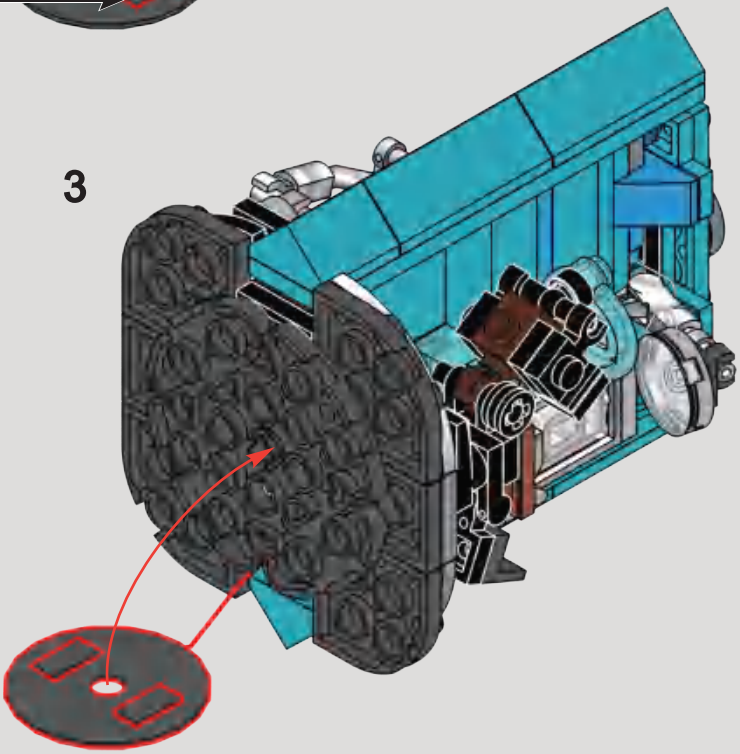

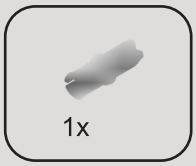

313

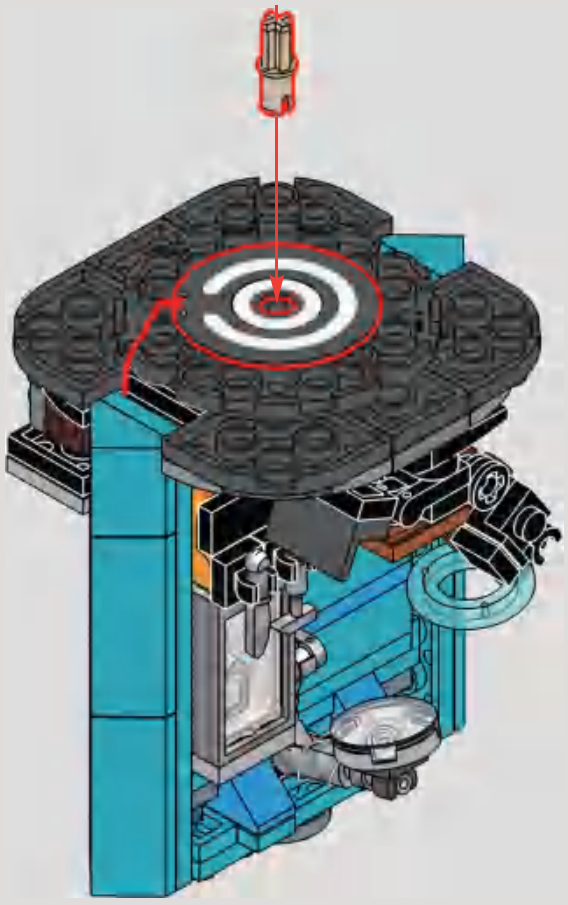

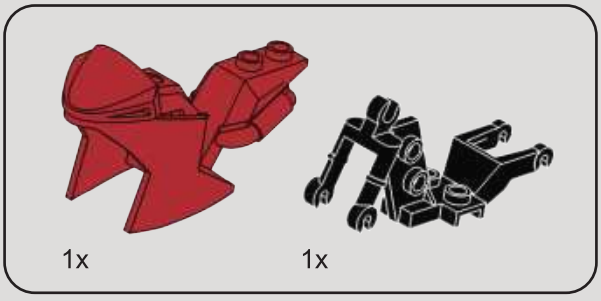

314

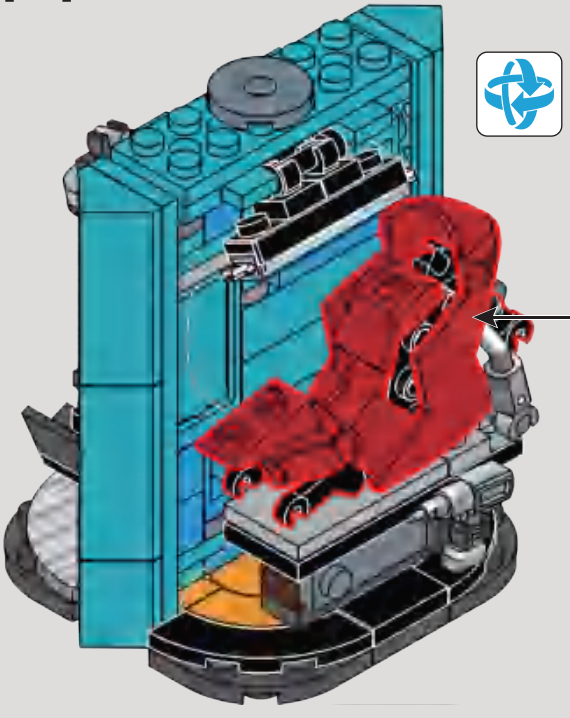

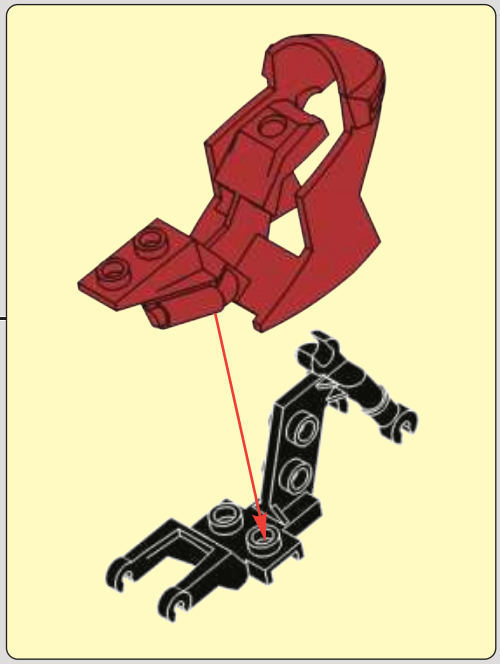

315

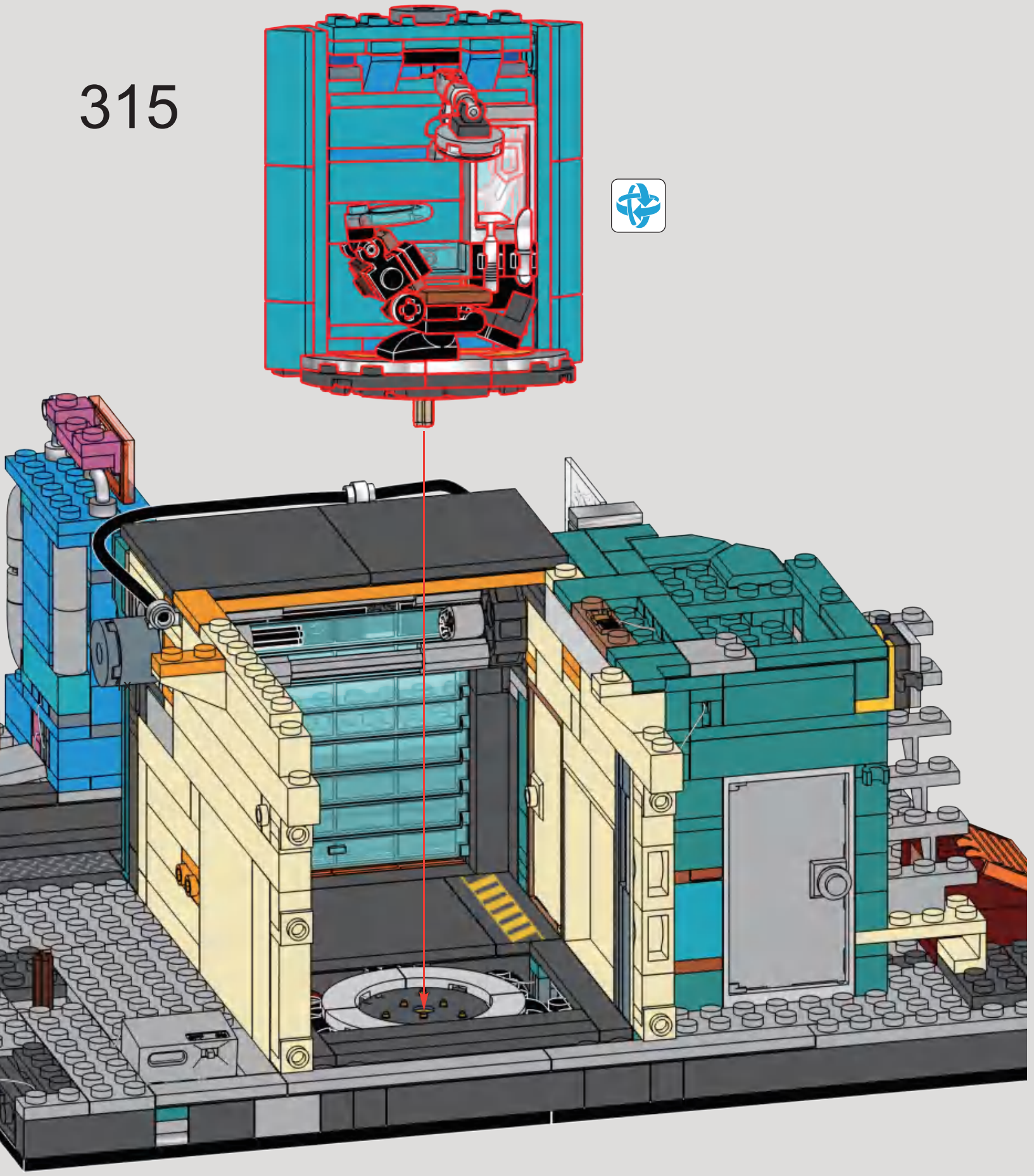

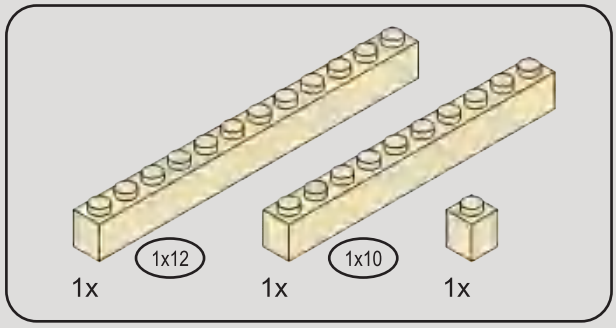

316

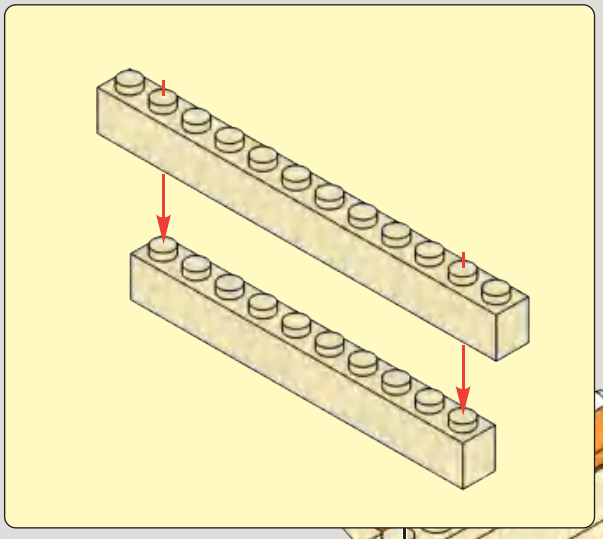

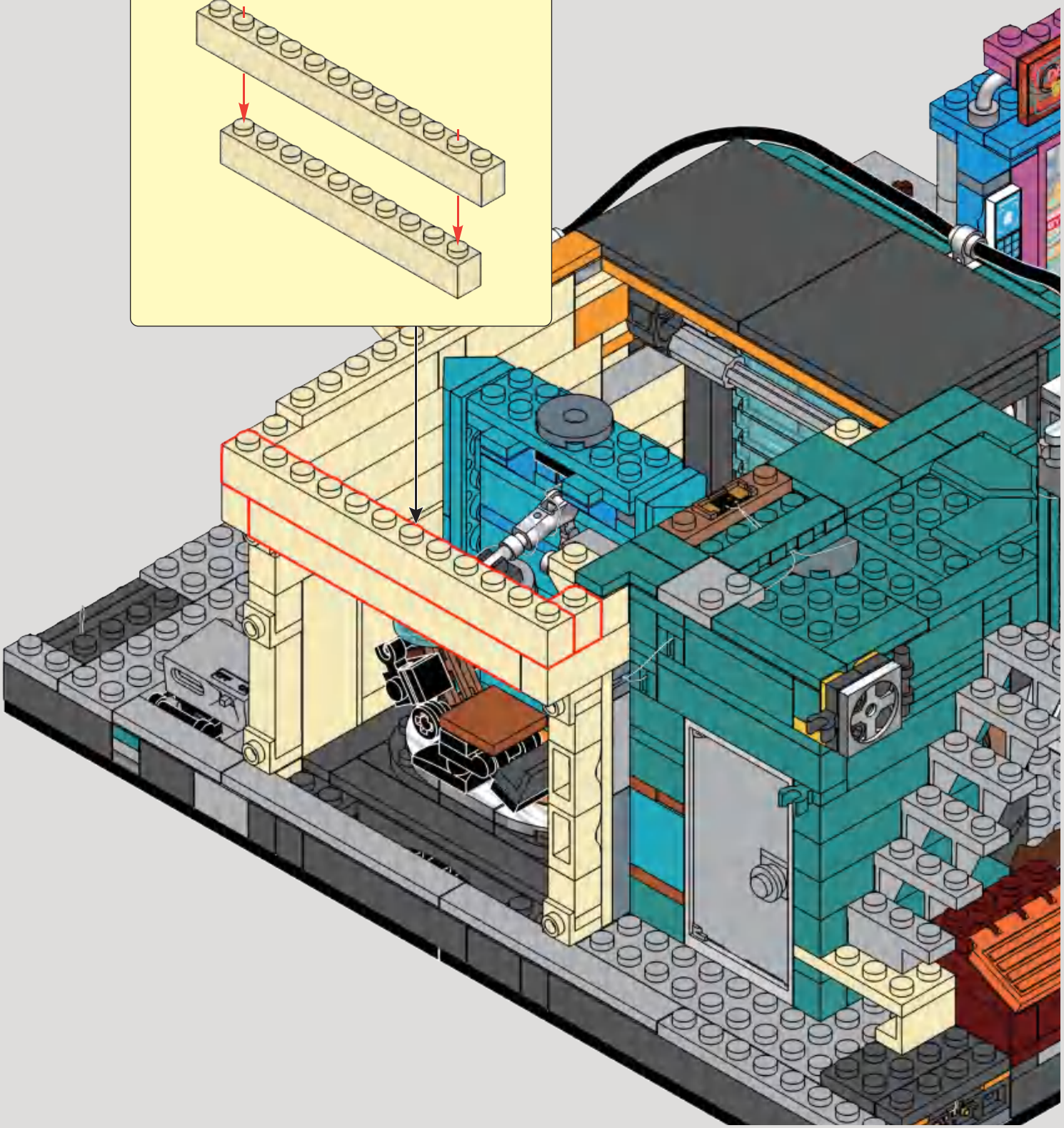

317

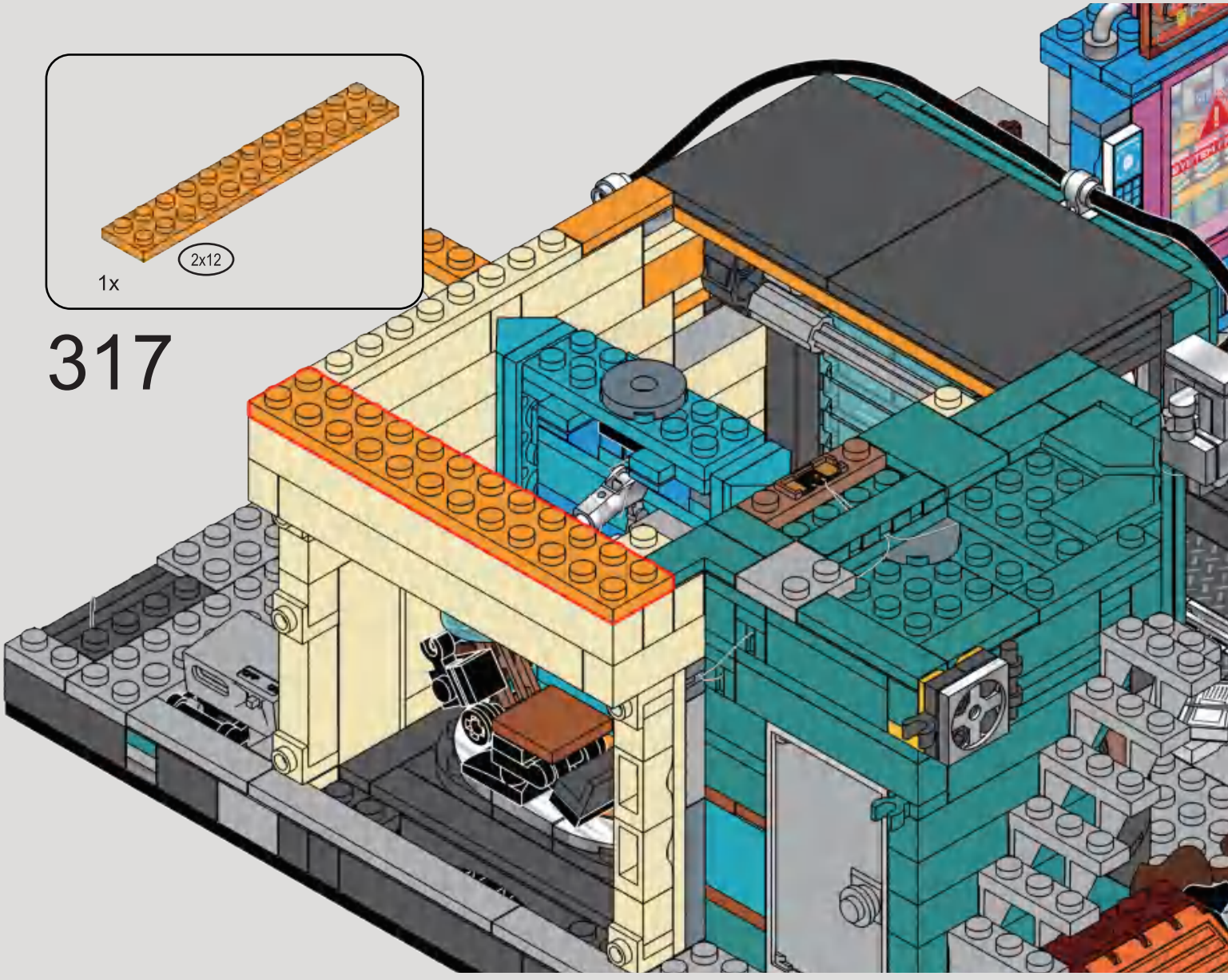

318

319

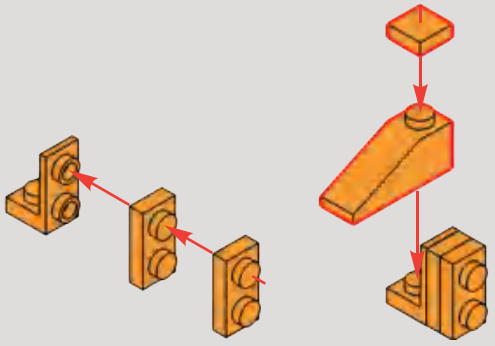

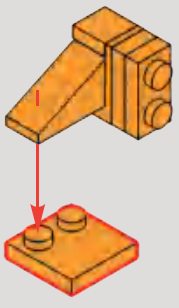

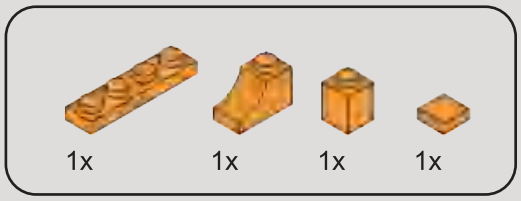

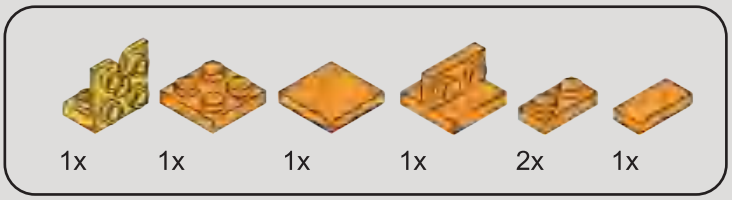

320

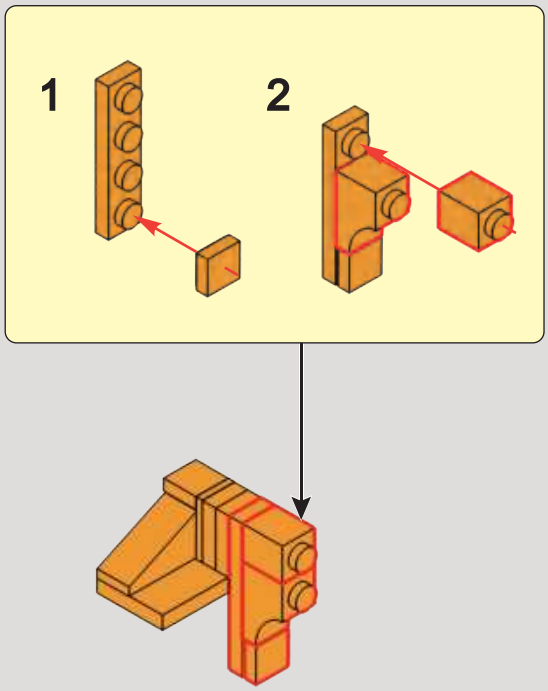

321

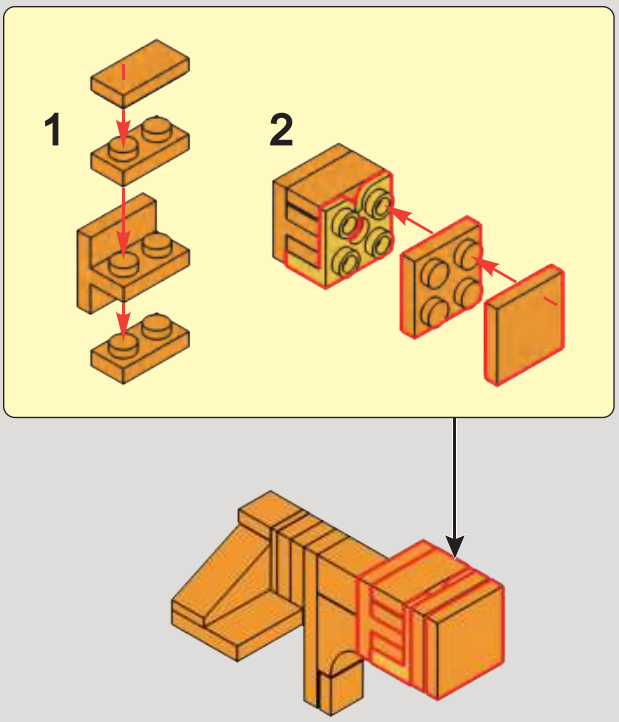

322

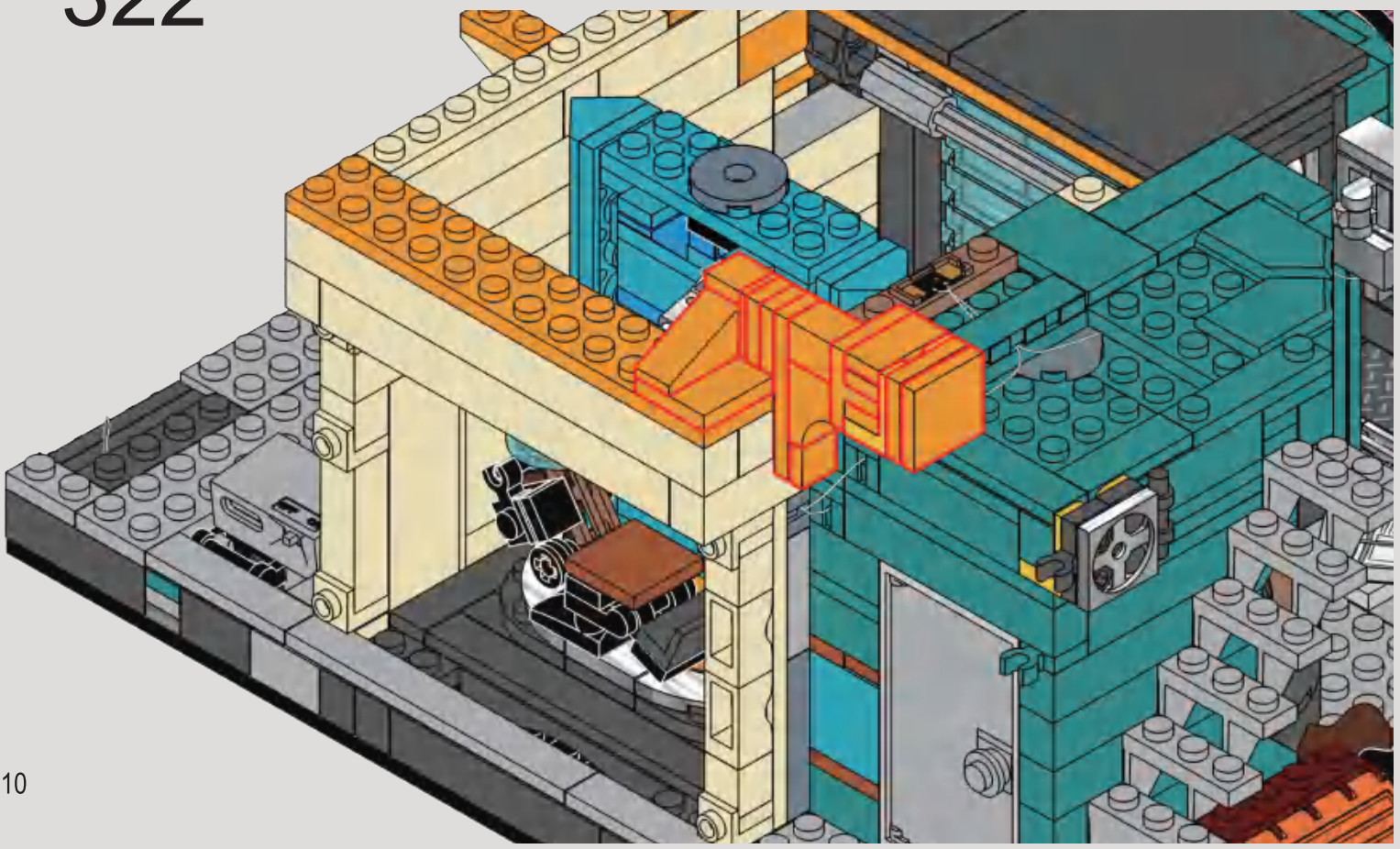

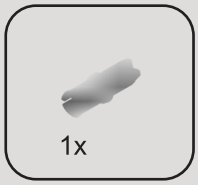

323 1

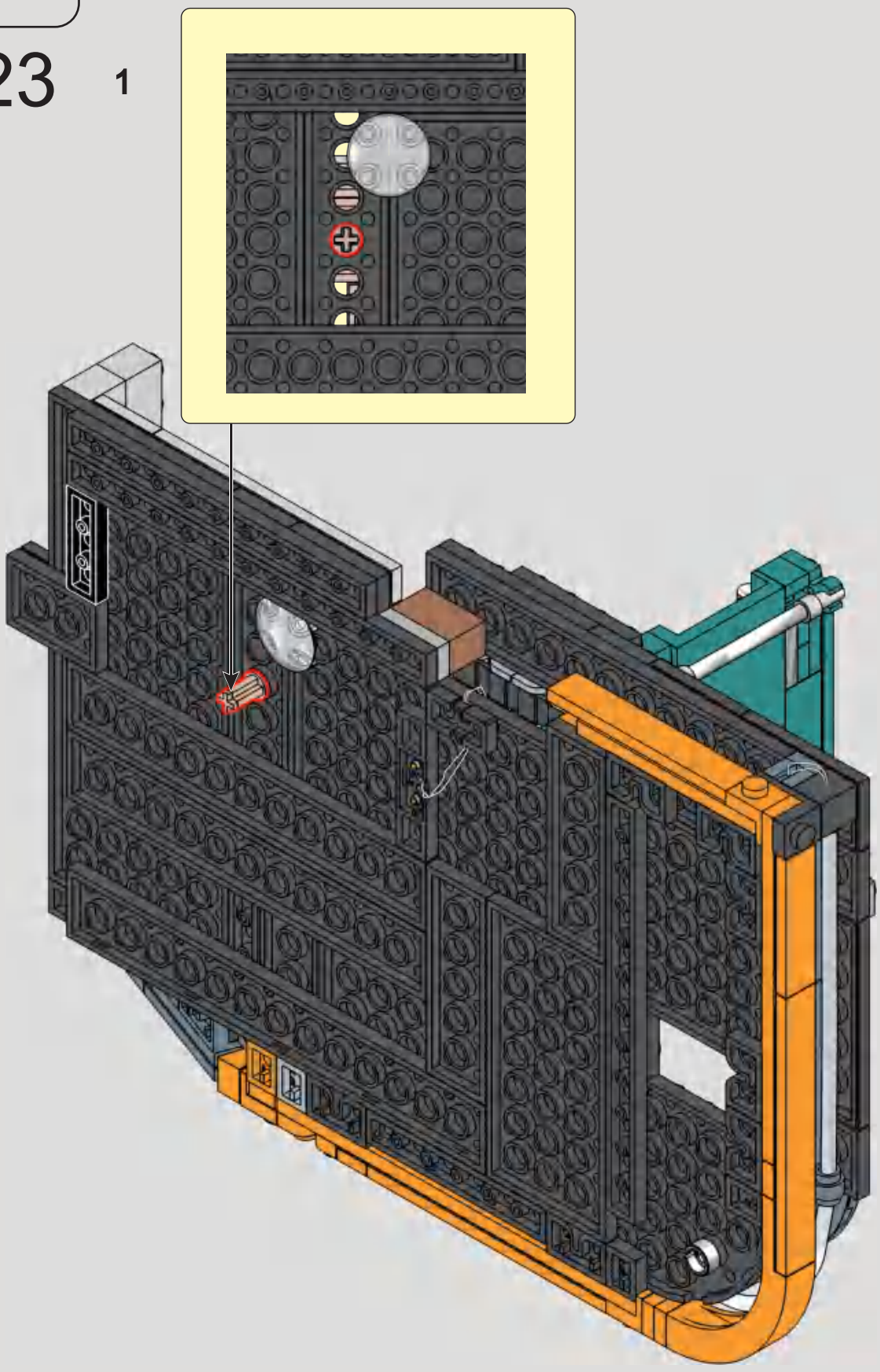

2

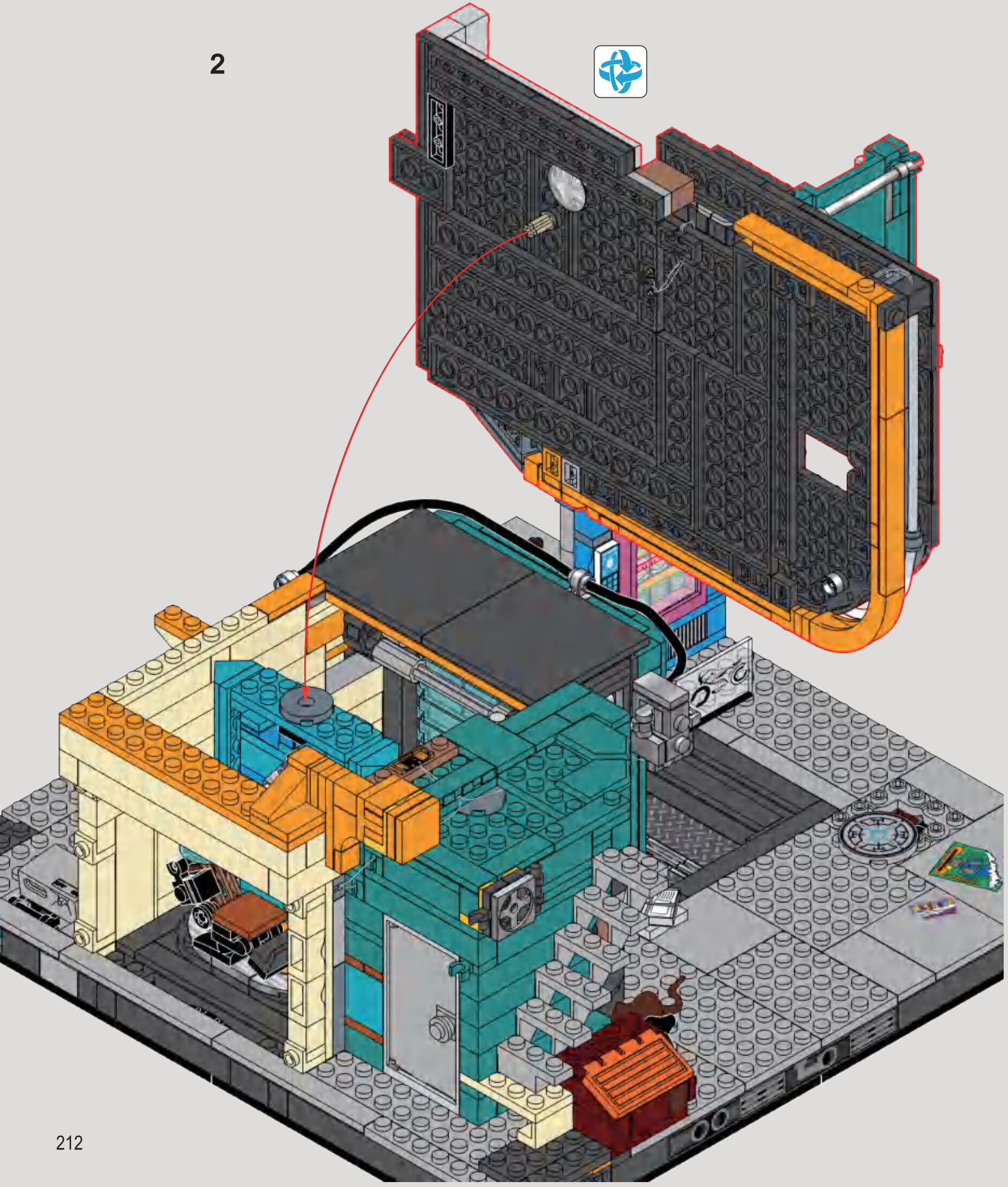

3

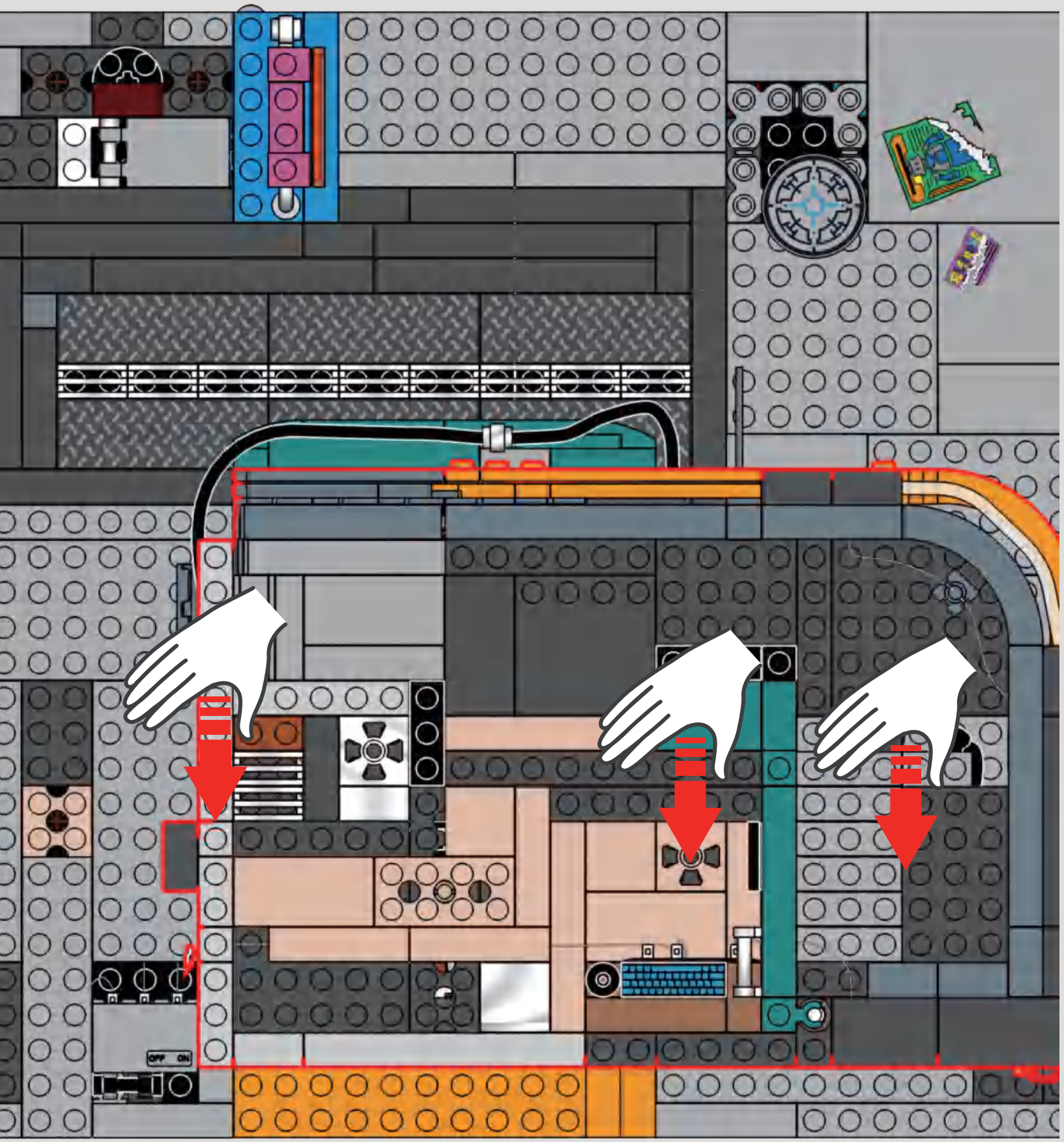

4

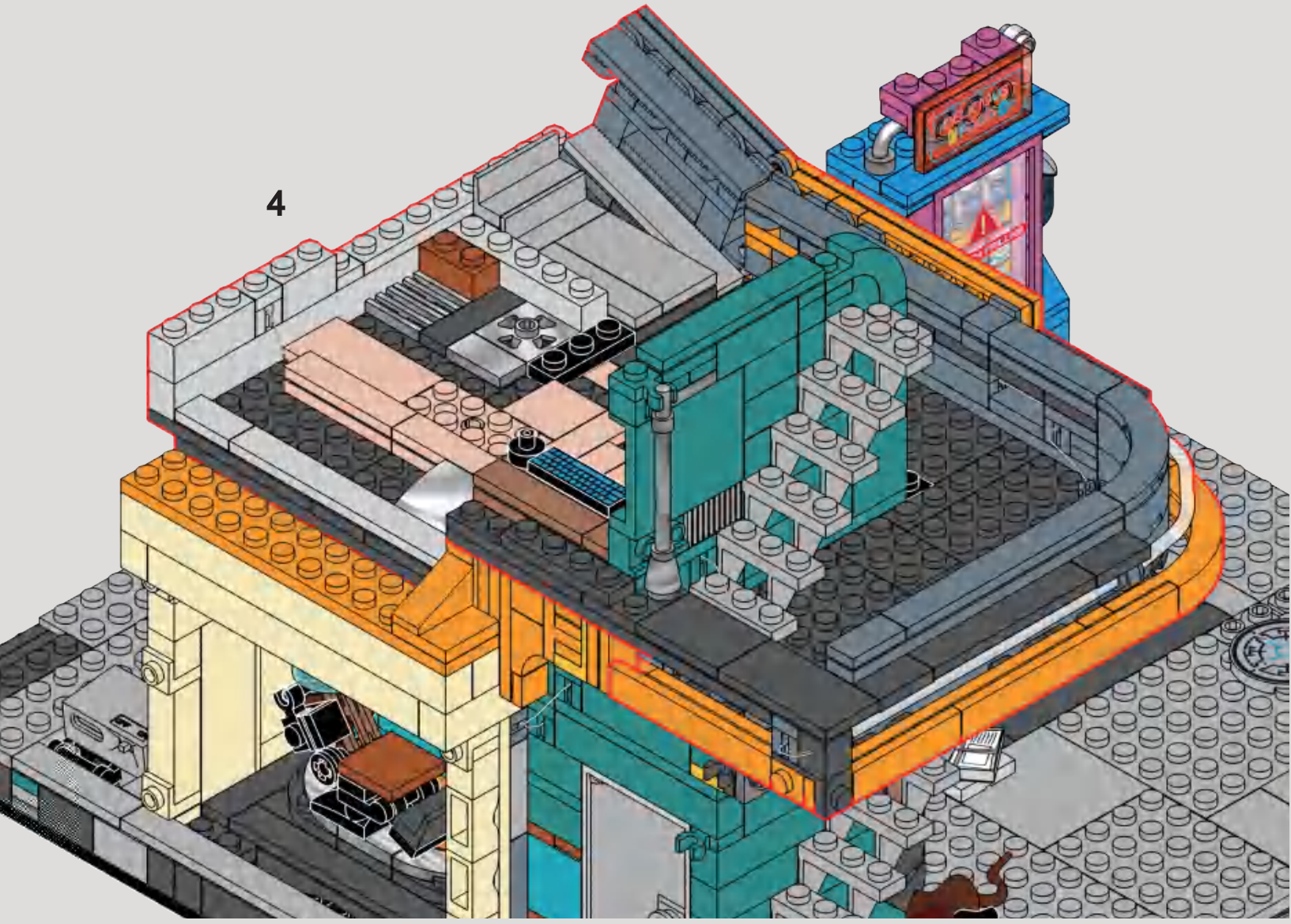

5

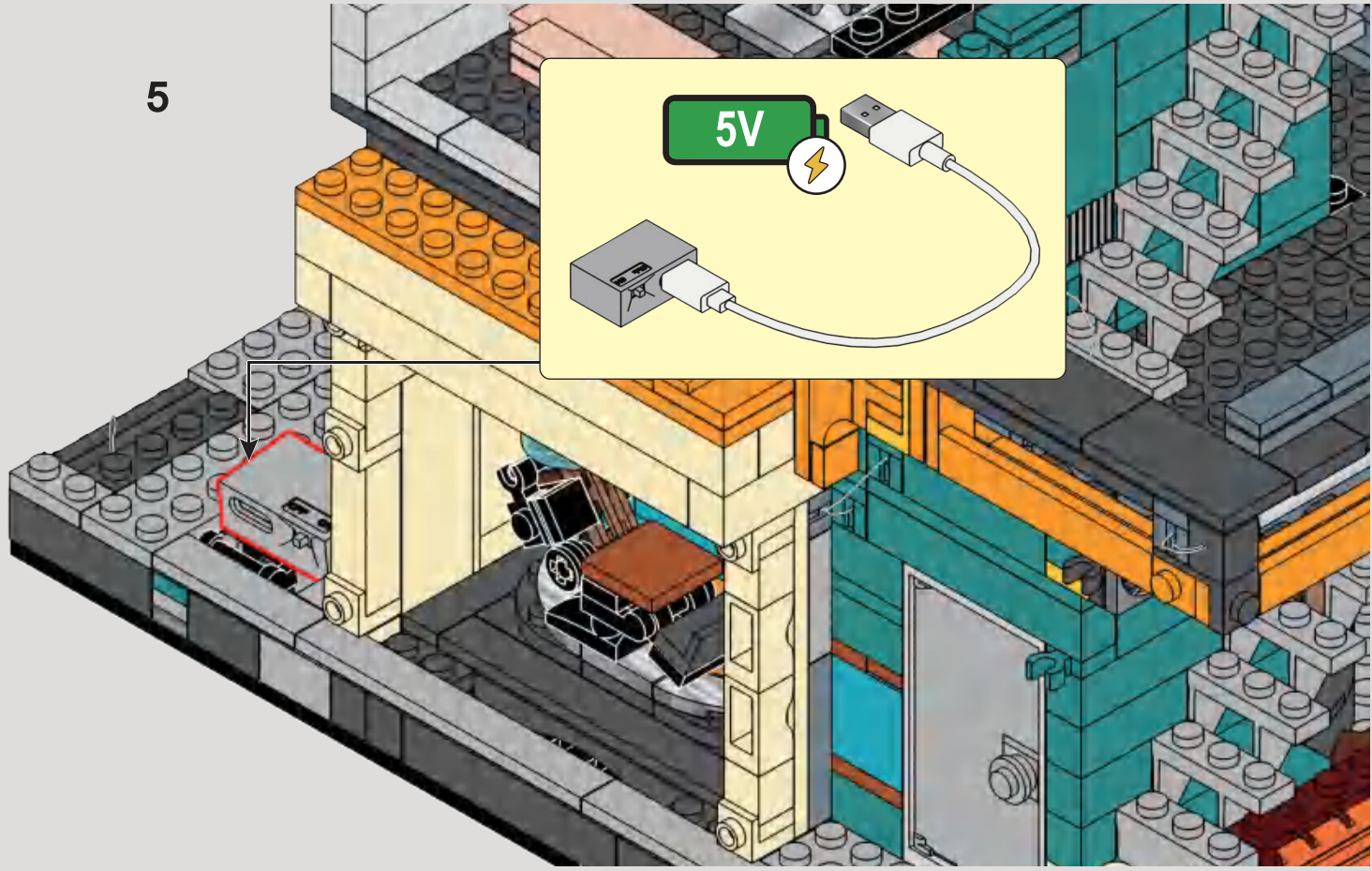

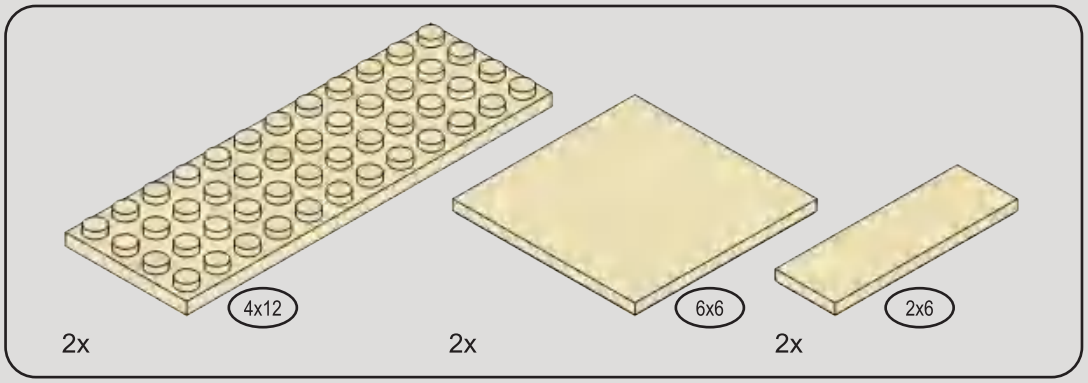

324

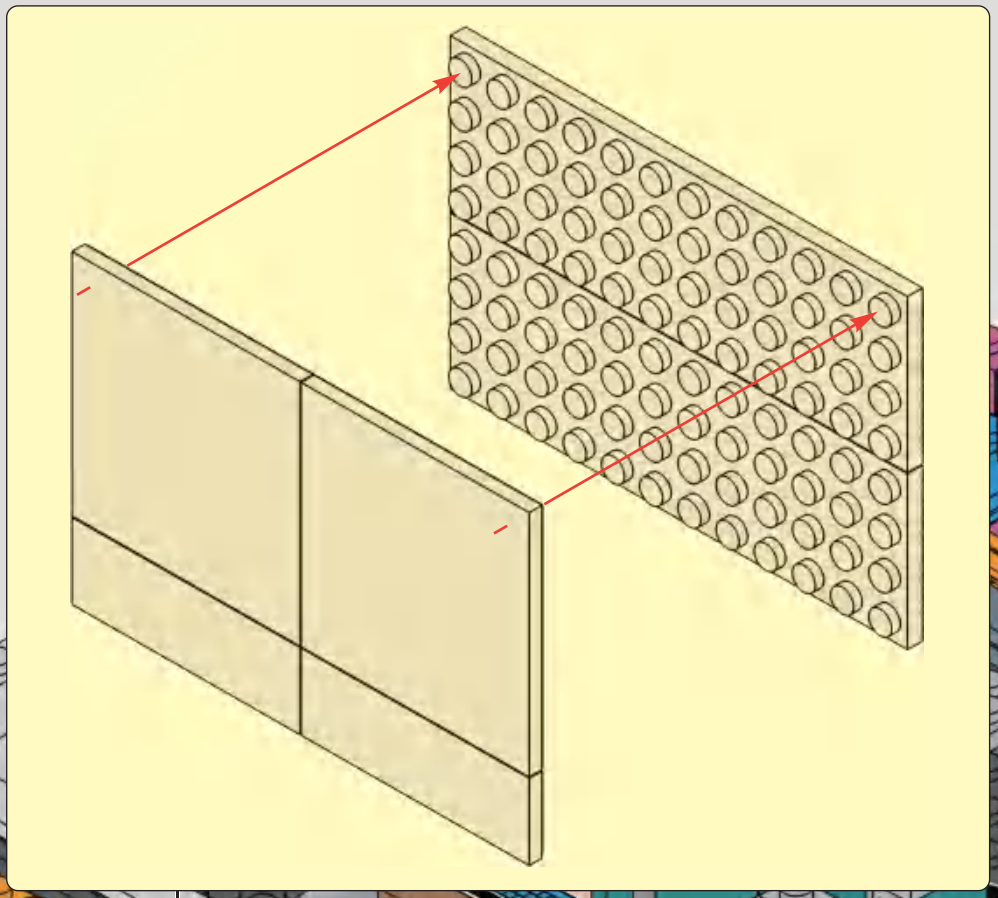

6
F
F.O
3
DELIGHT
DAY AND NIGHT

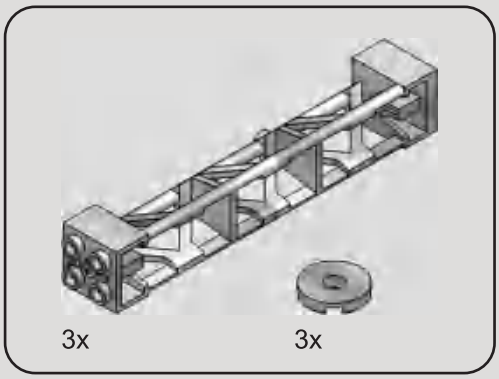

325

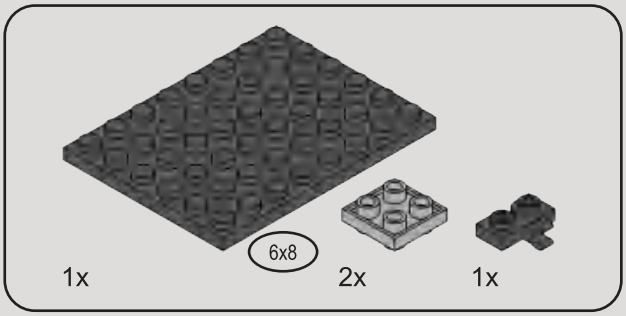

326

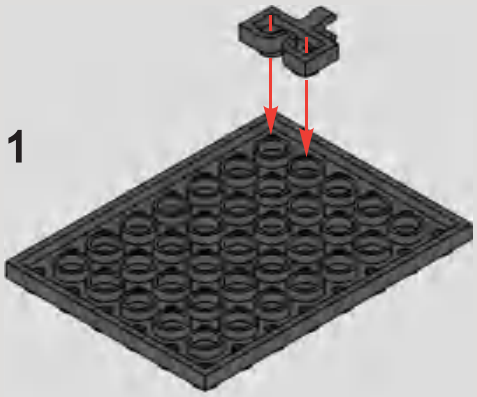

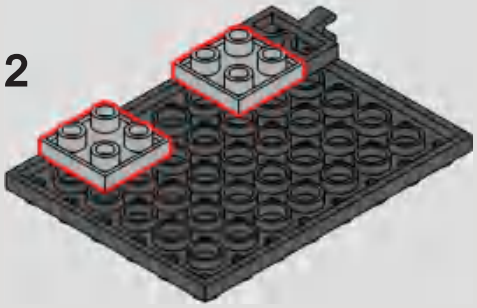

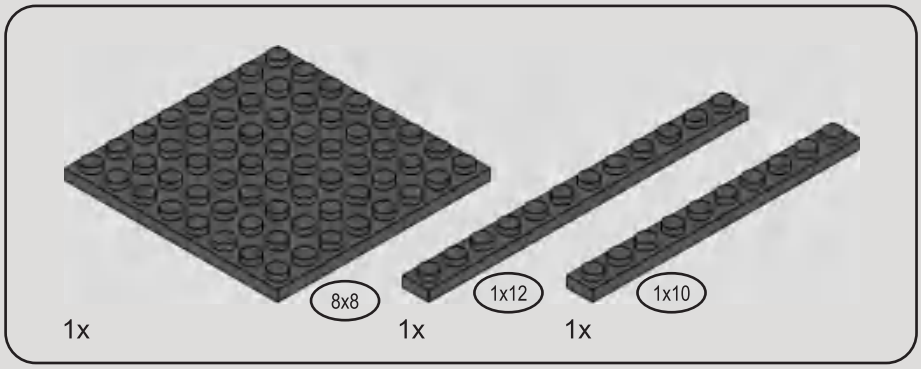

327

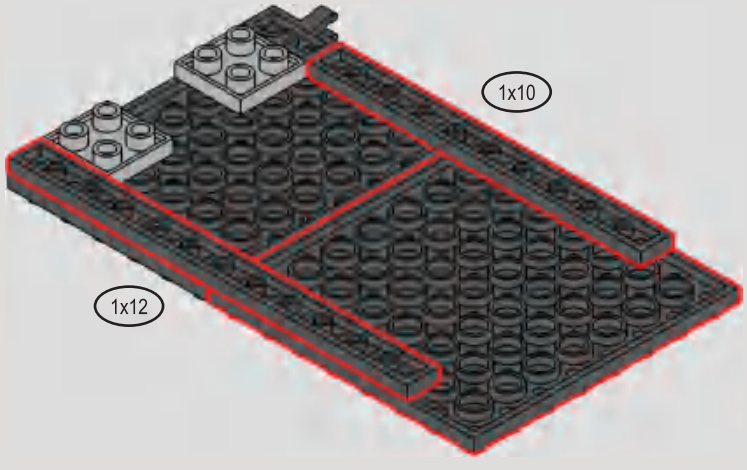

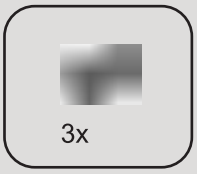

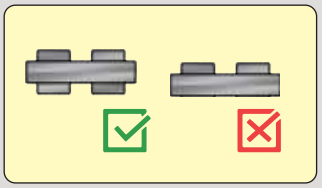

328

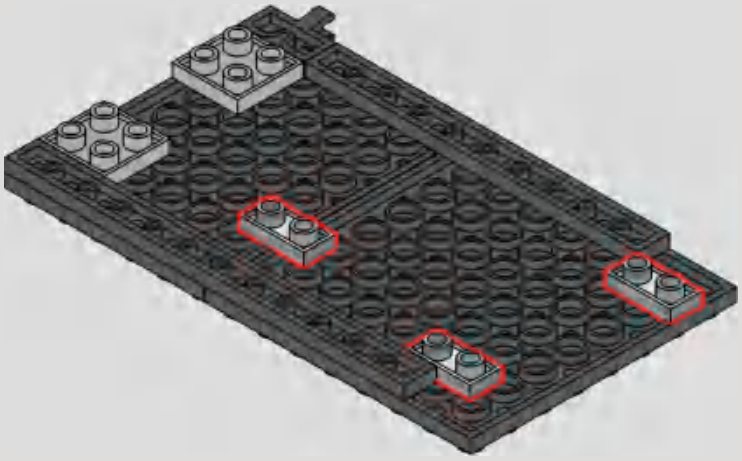

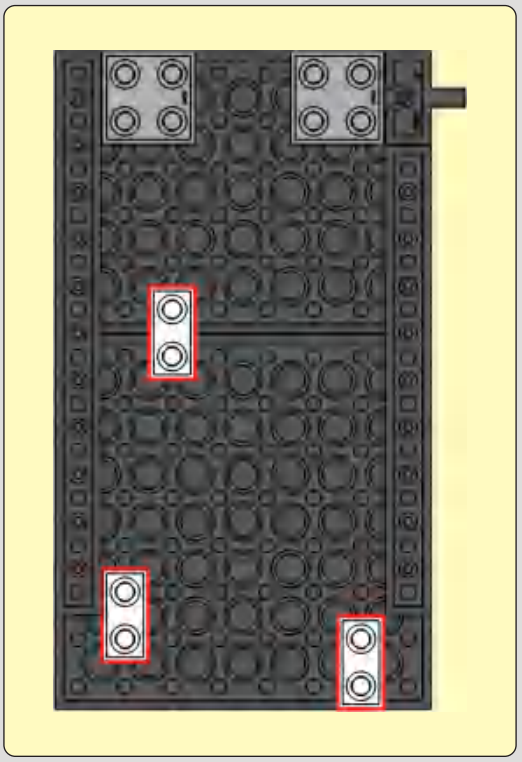

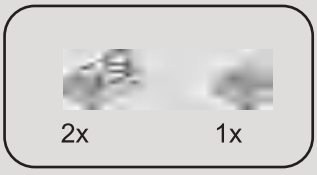

329

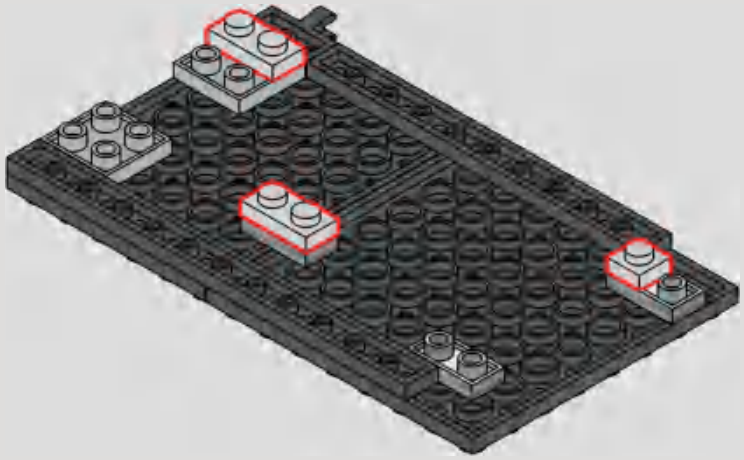

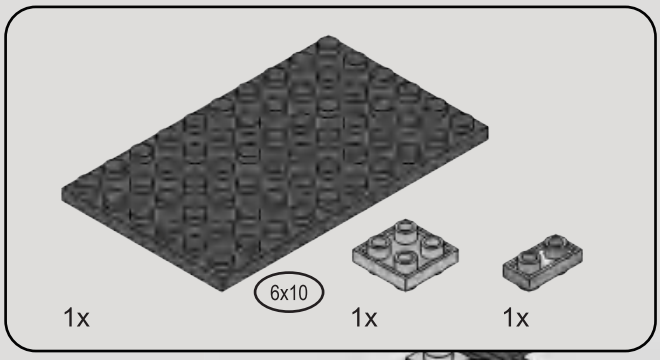

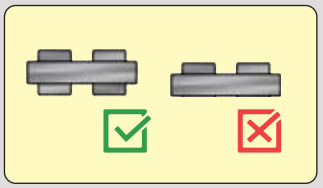

330

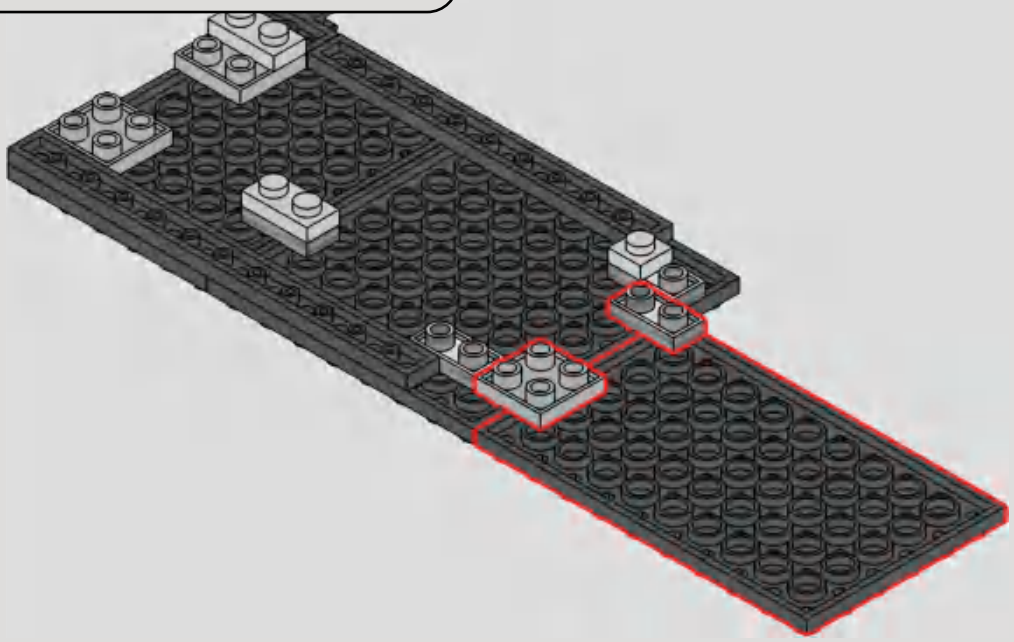

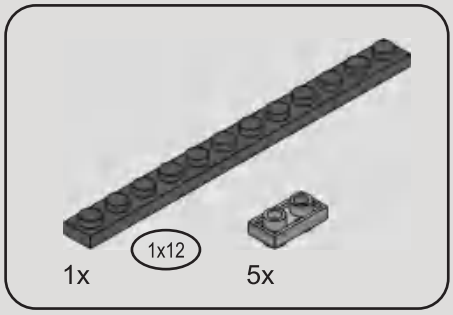

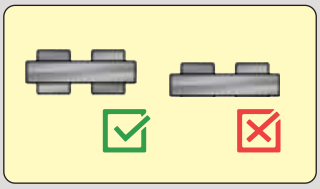

331

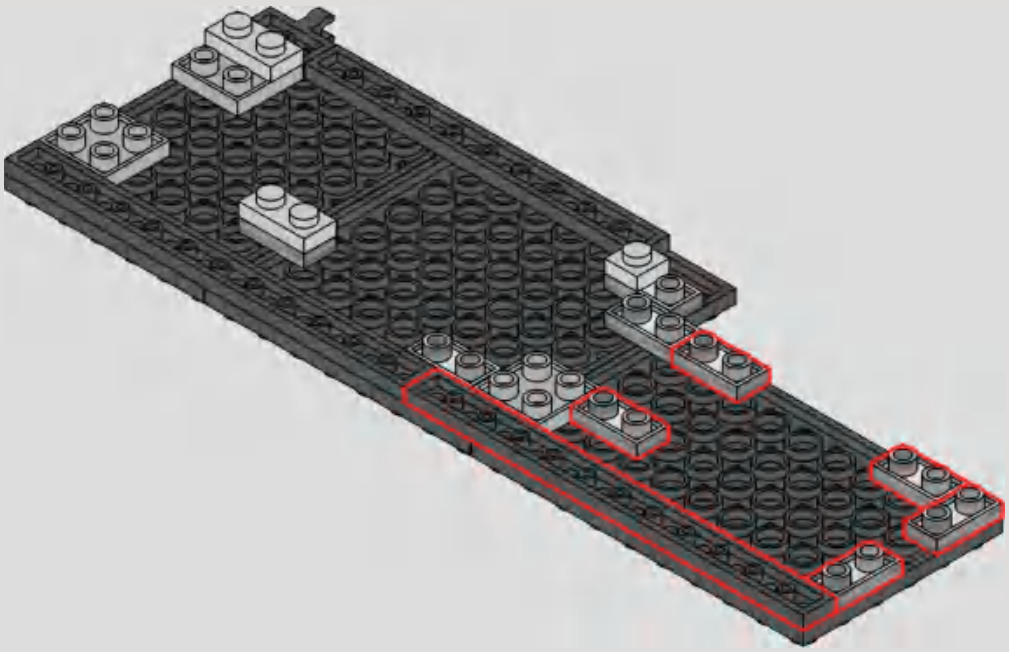

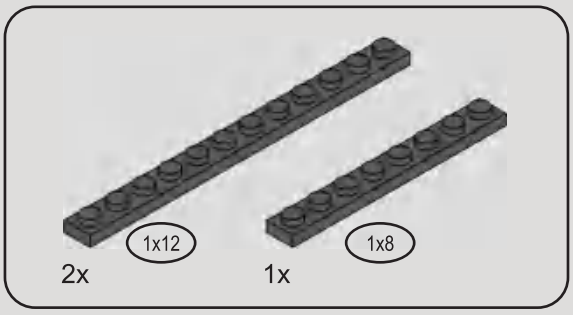

332

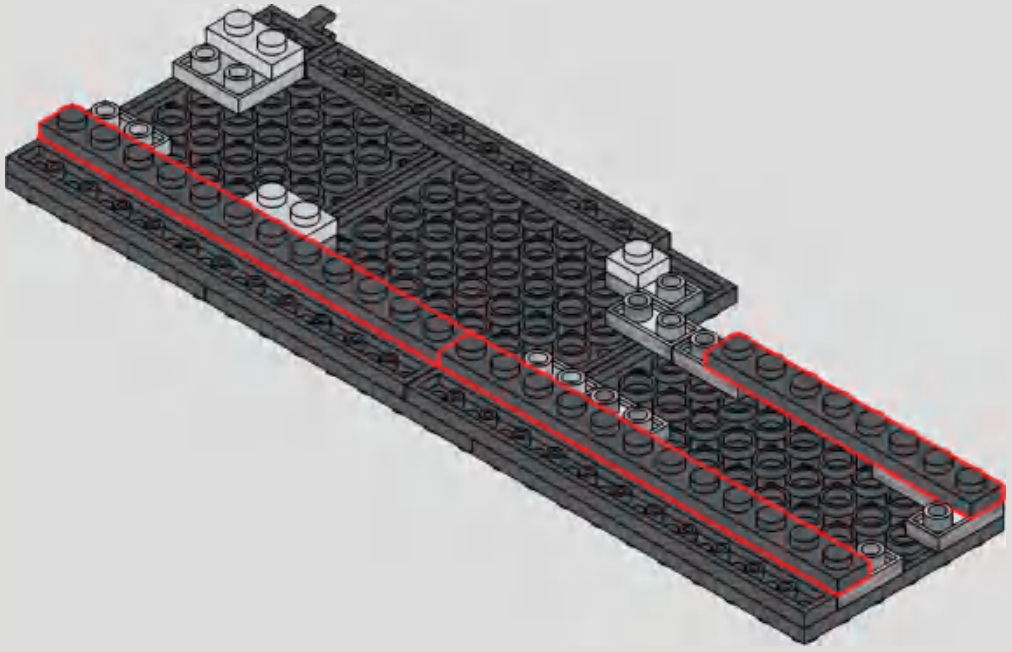

333

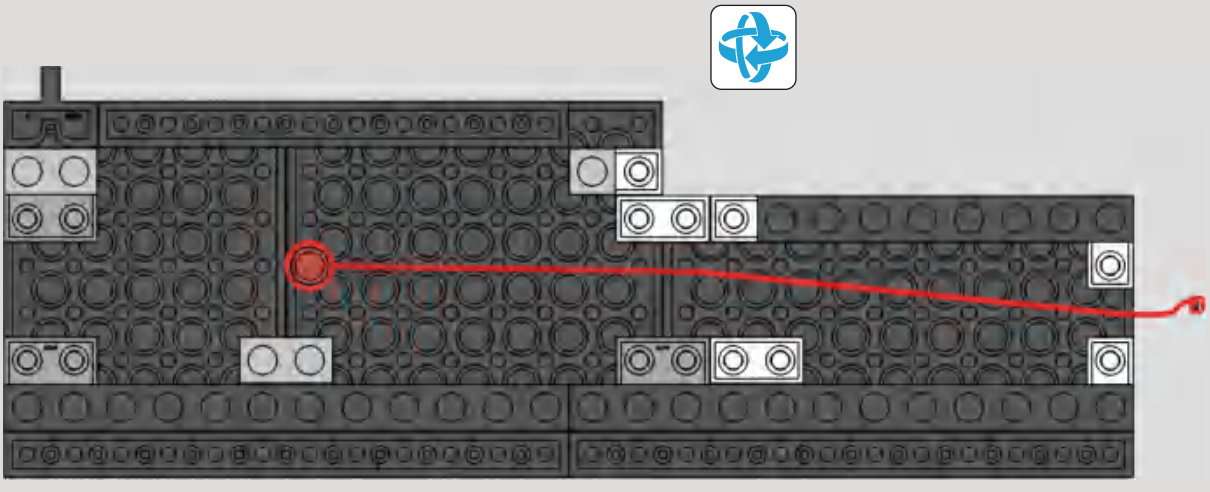

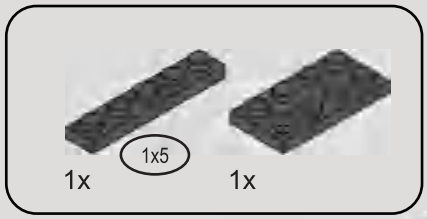

334

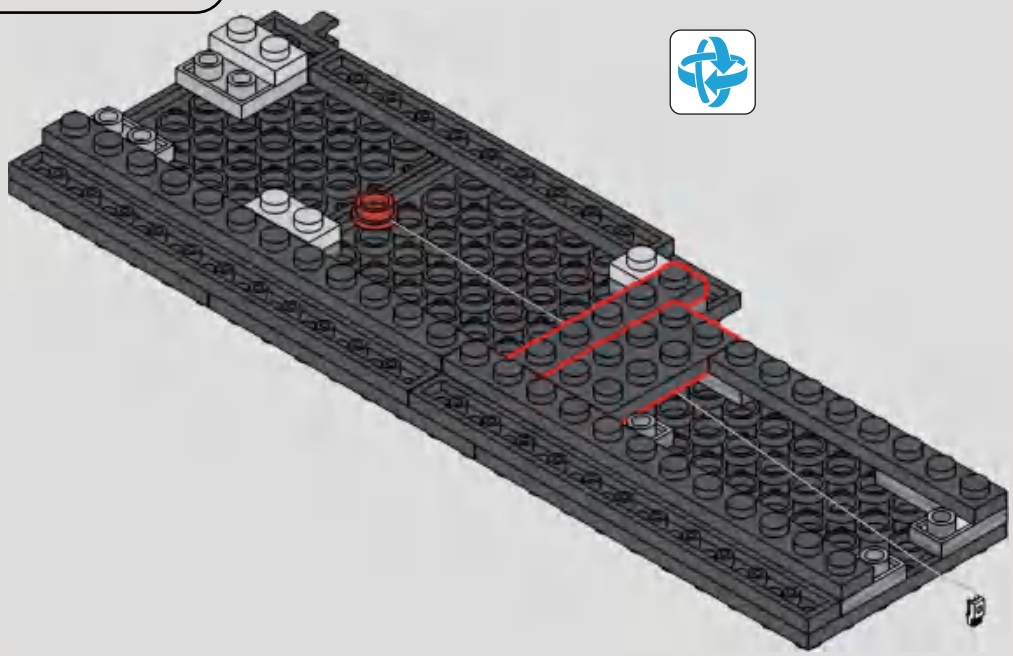

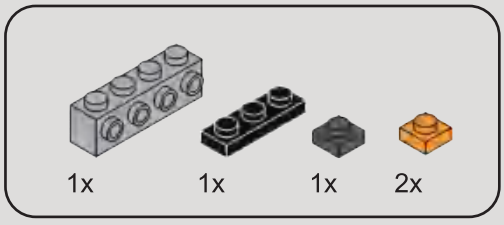

335

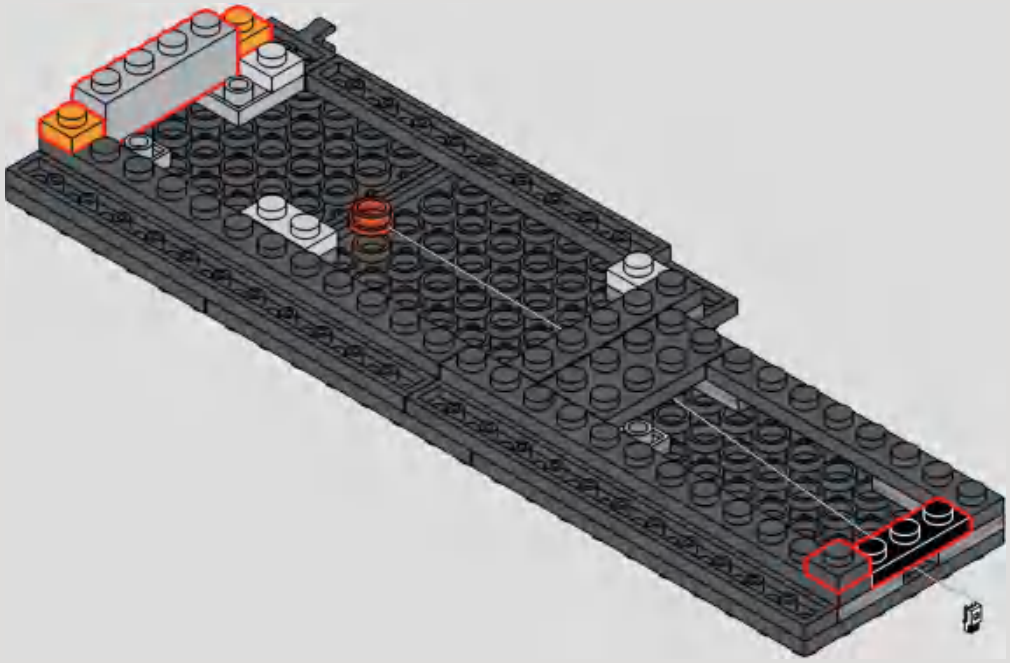

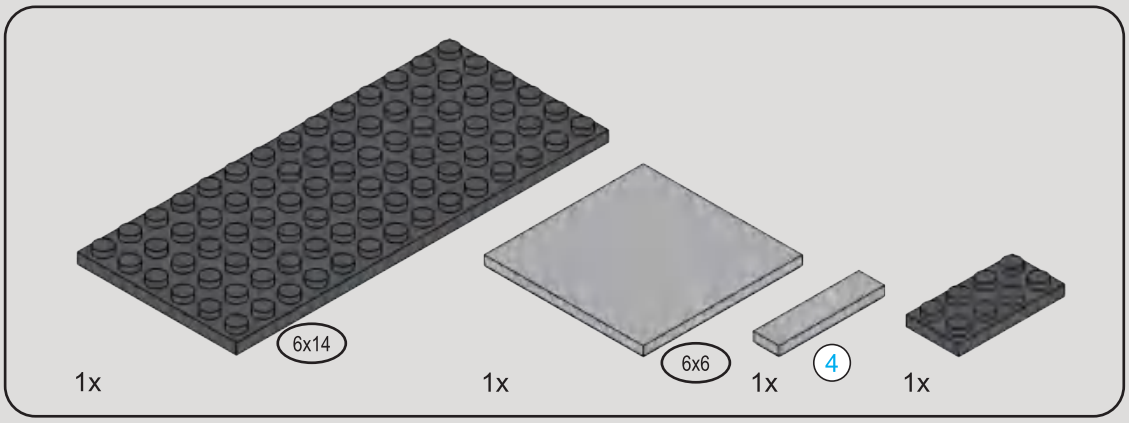

336

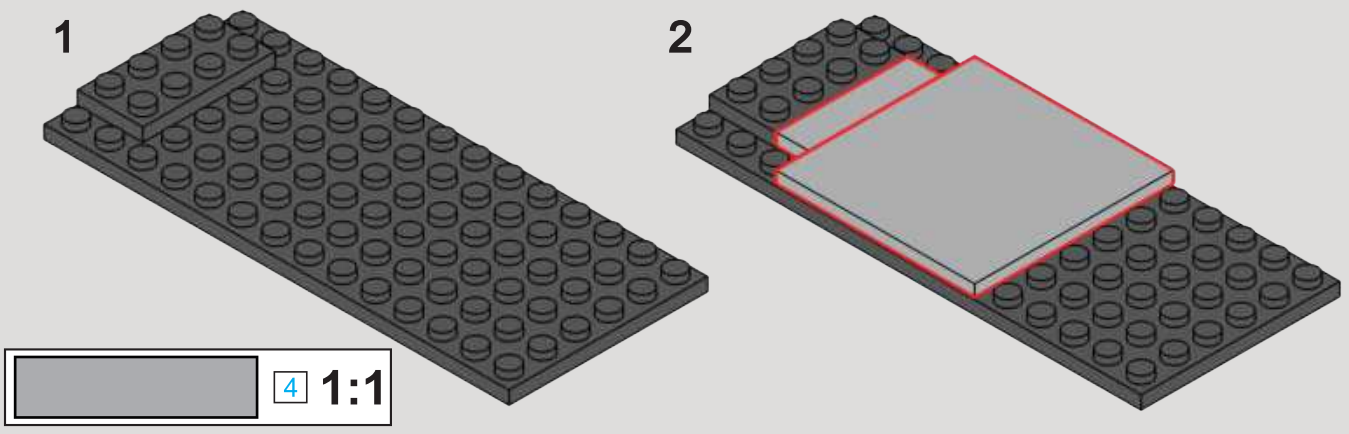

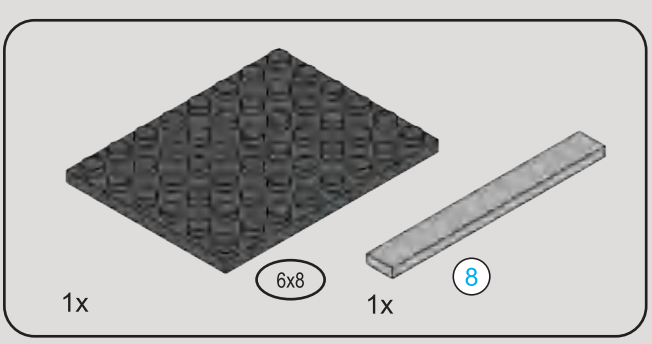

337

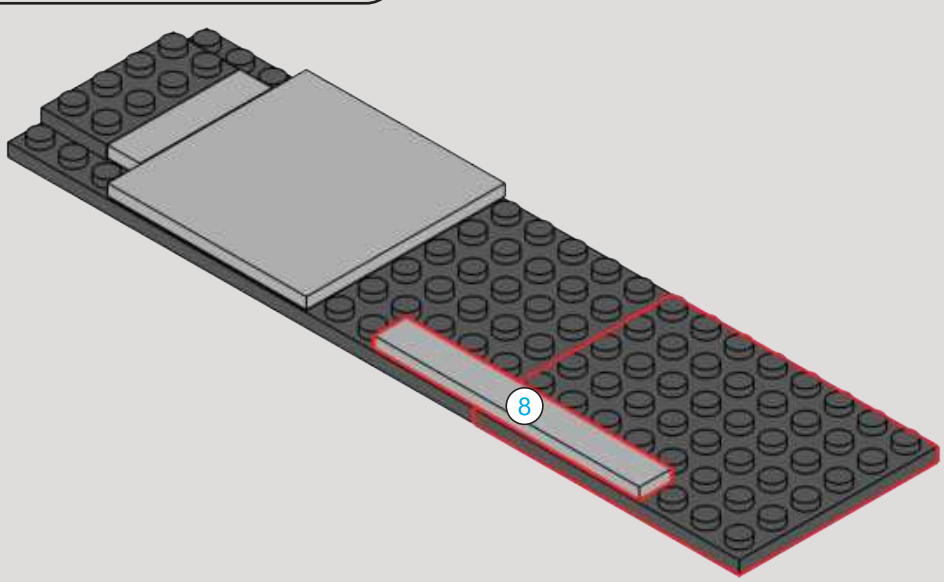

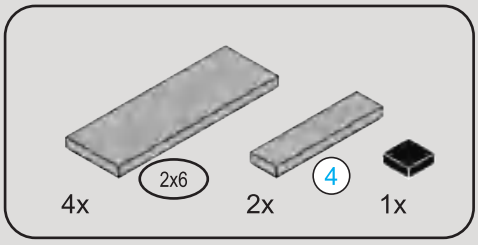

338

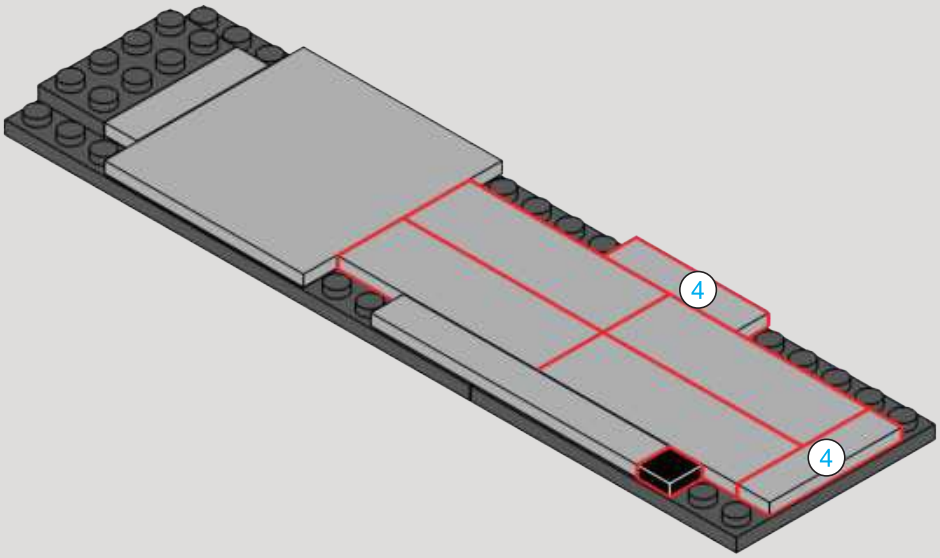

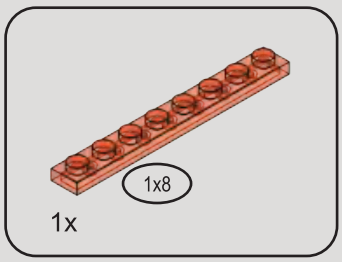

339

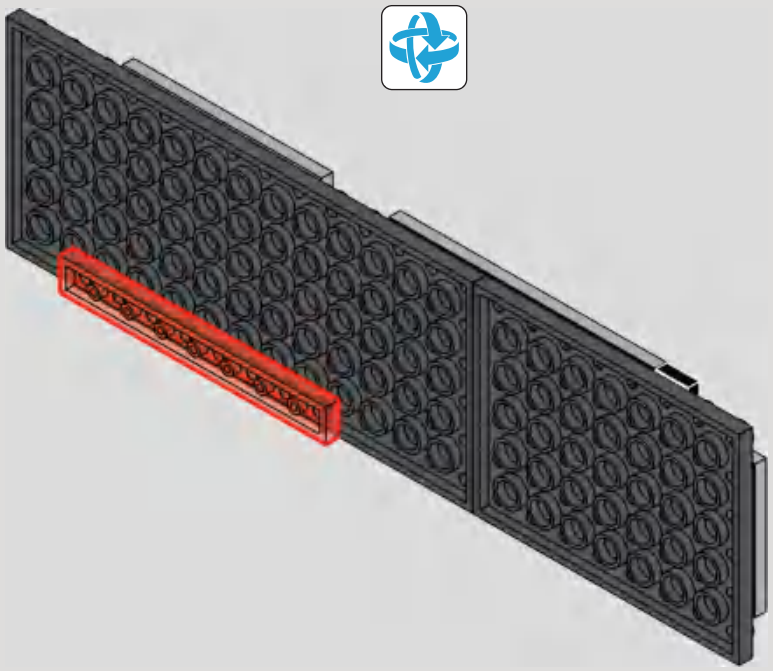

340

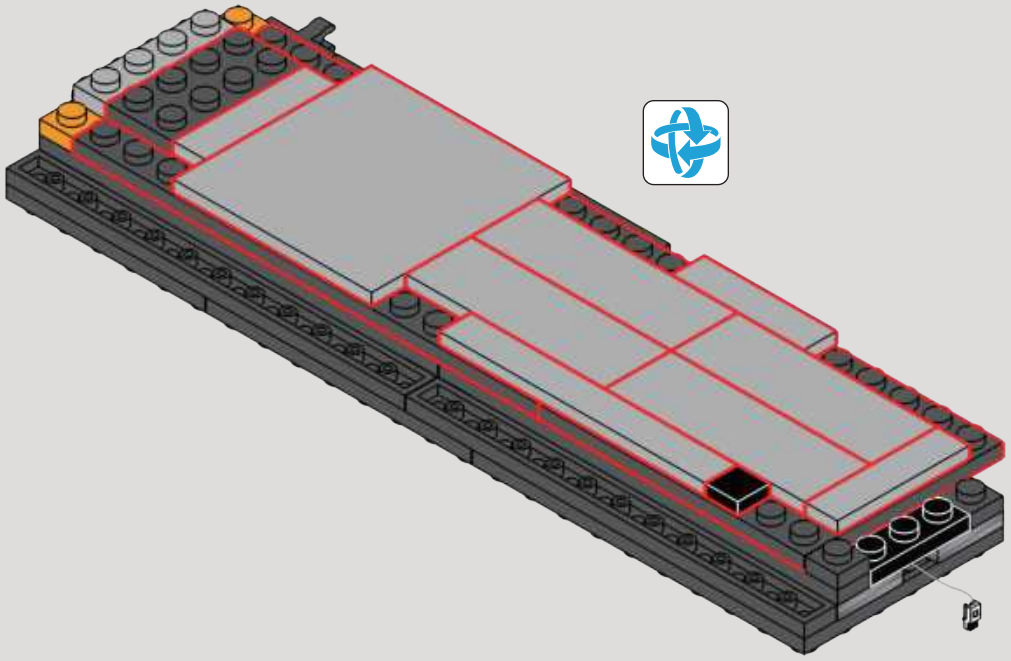

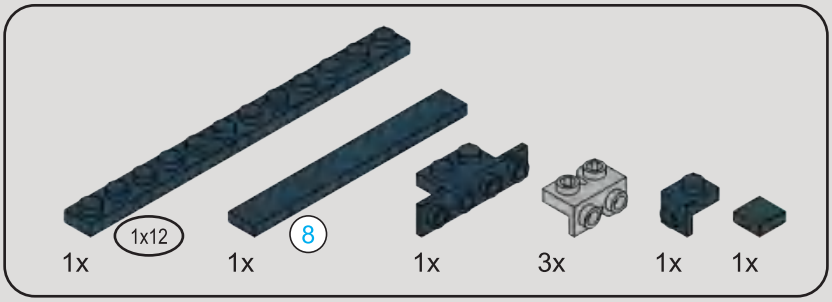

341

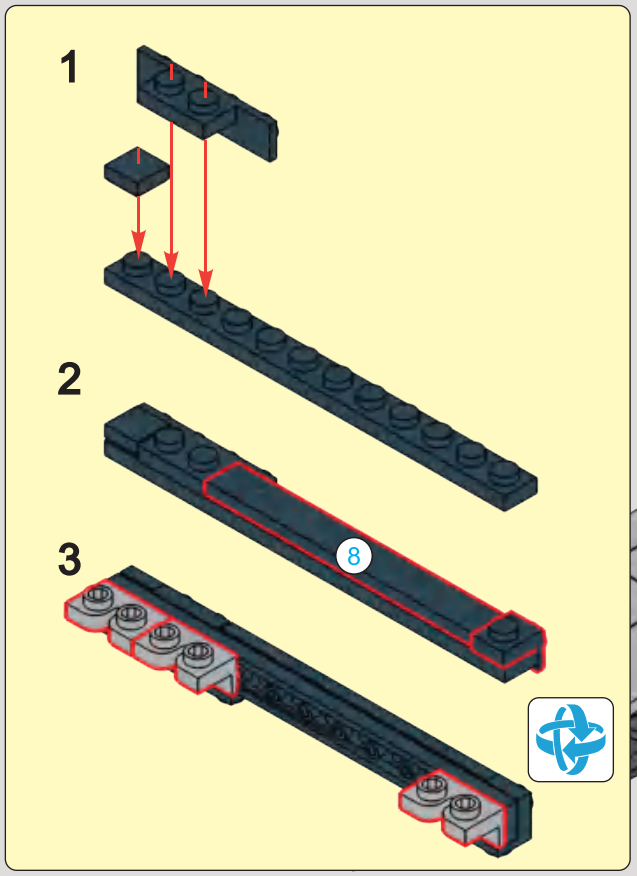

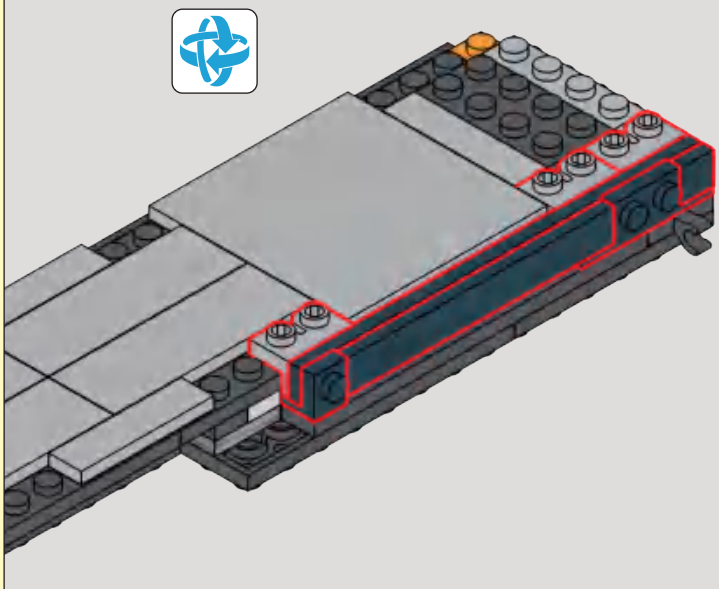

342

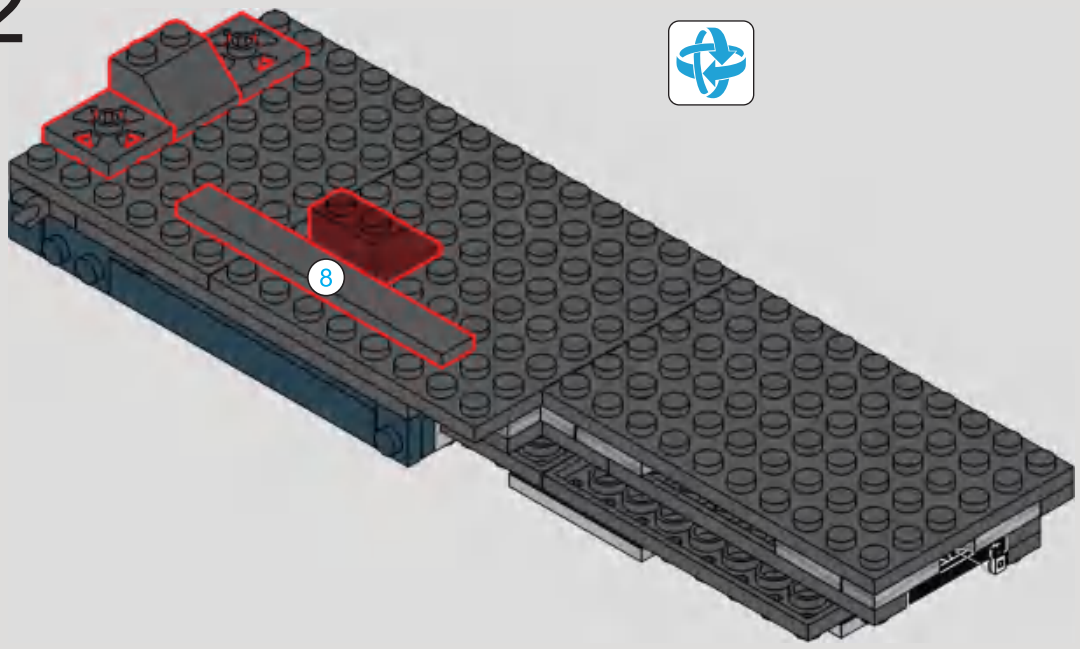

343

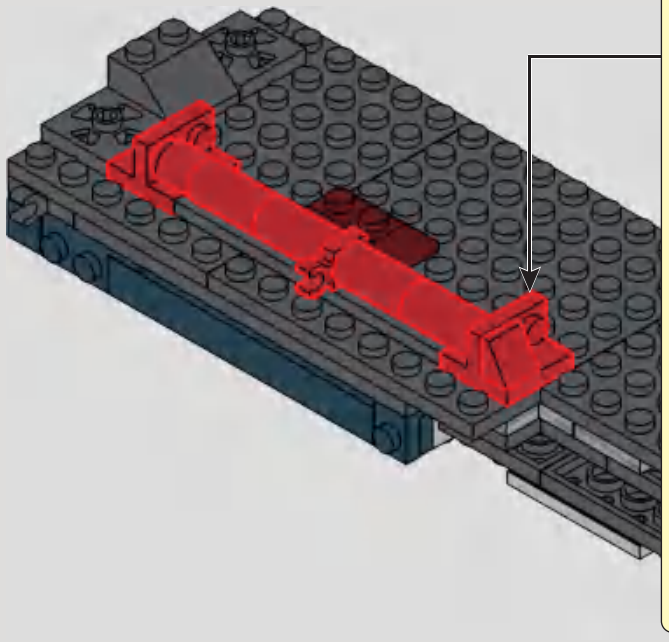

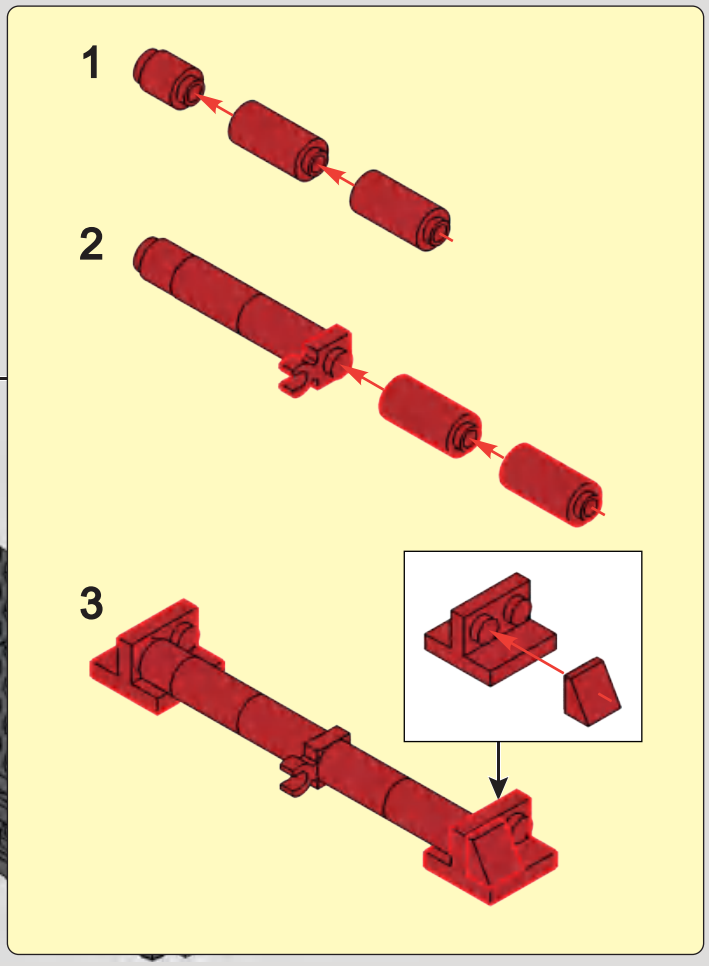

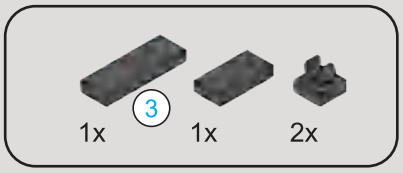

344

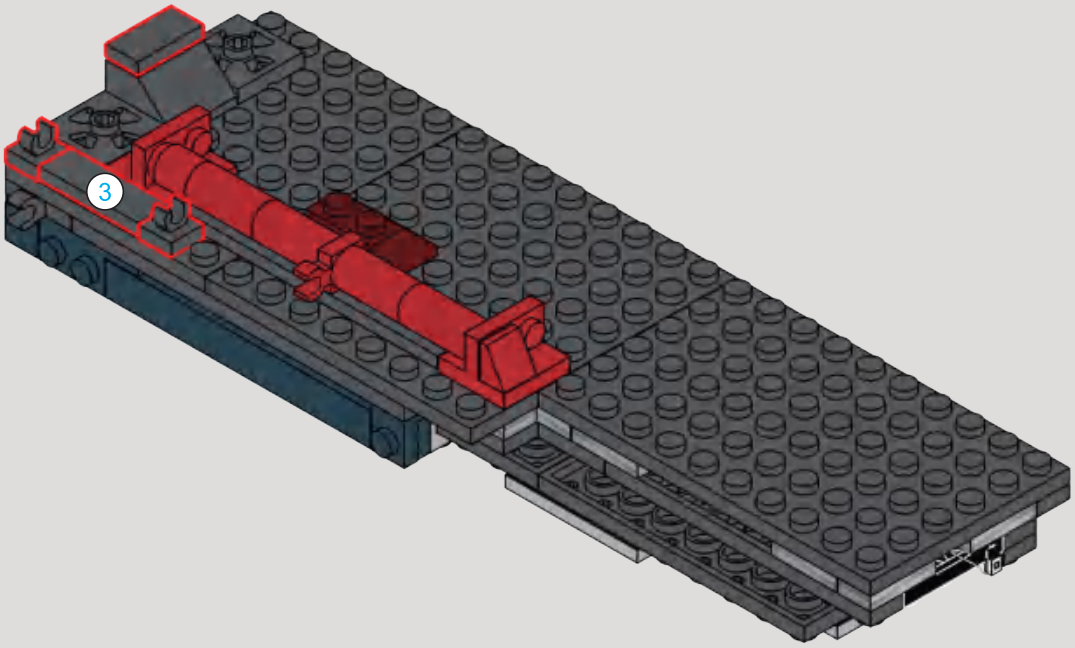

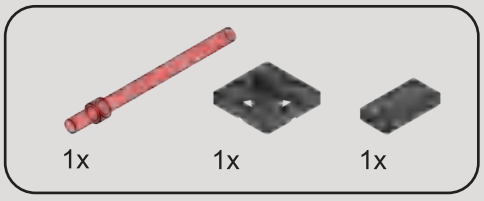

345

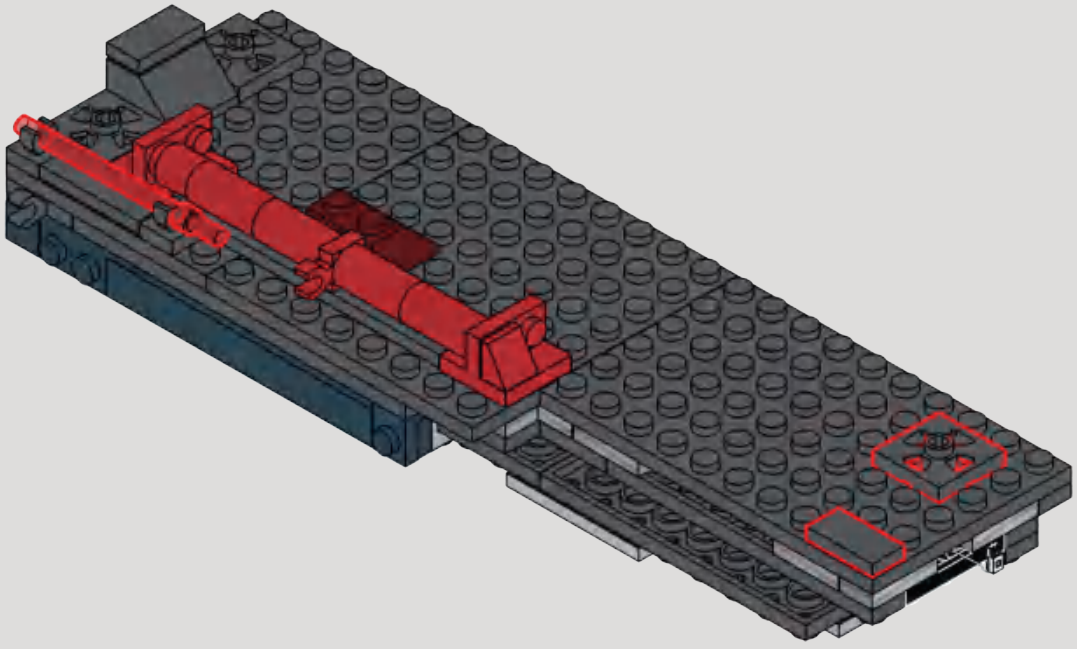

346

1

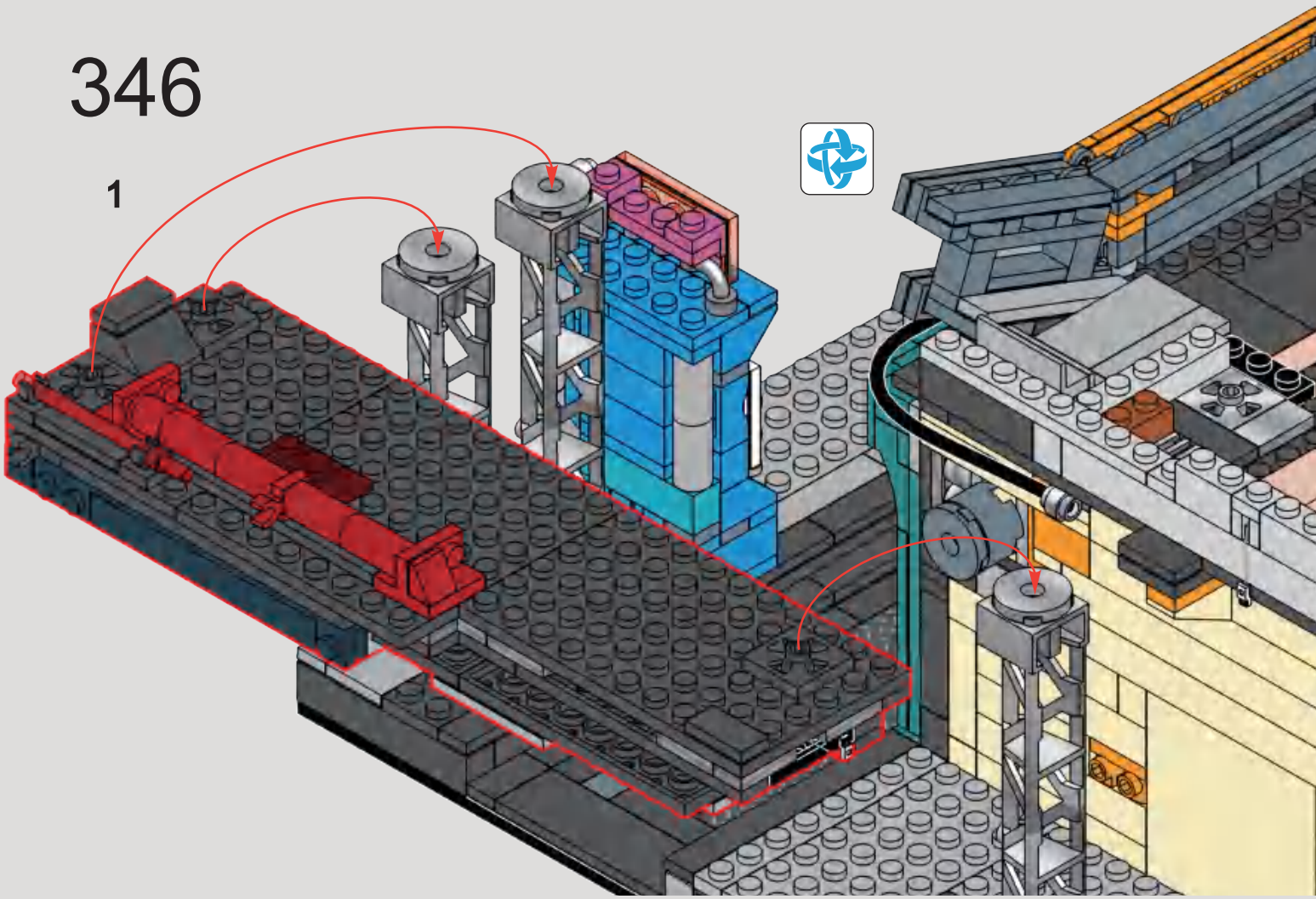

2

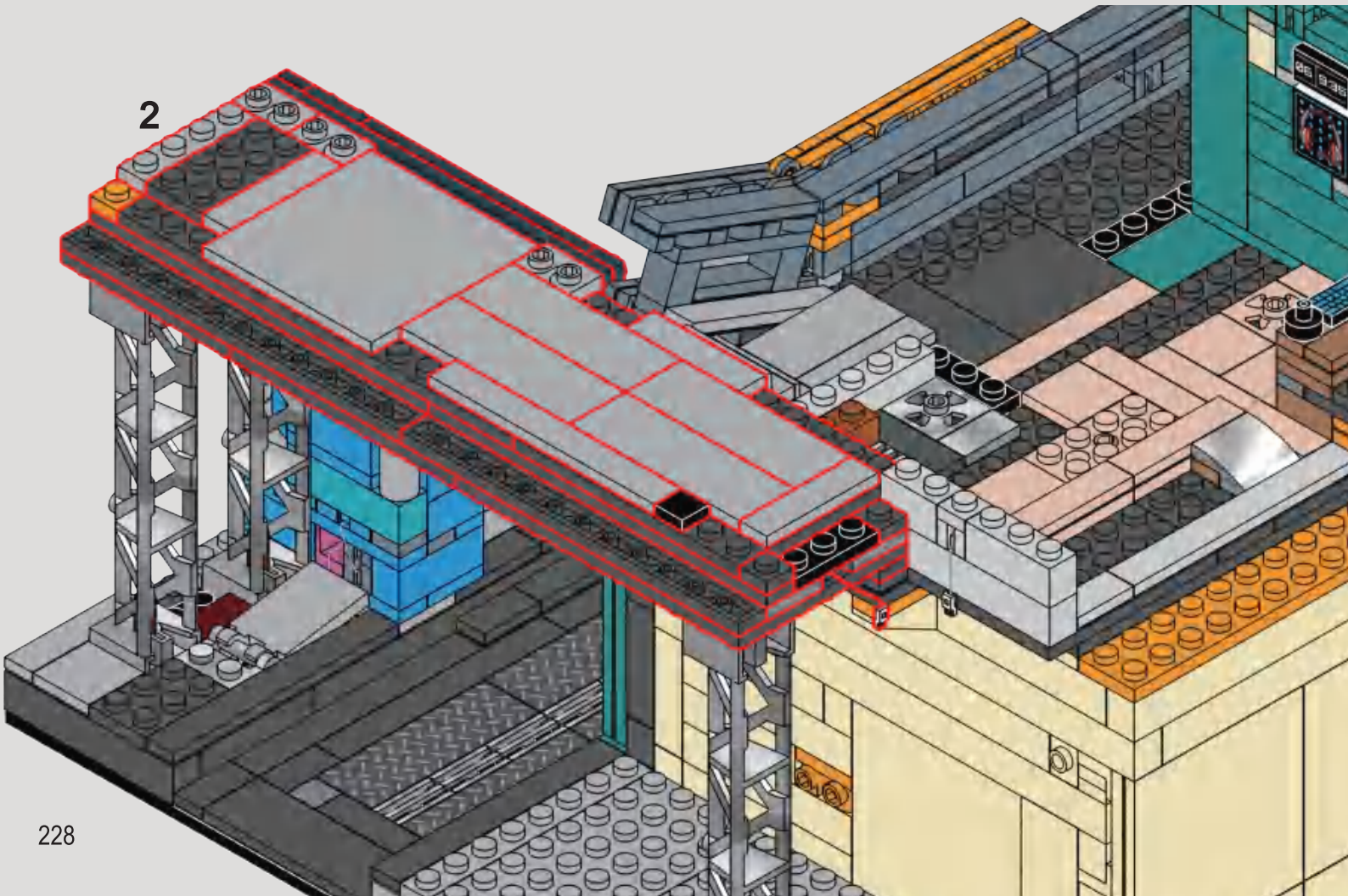

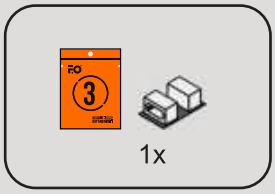

347

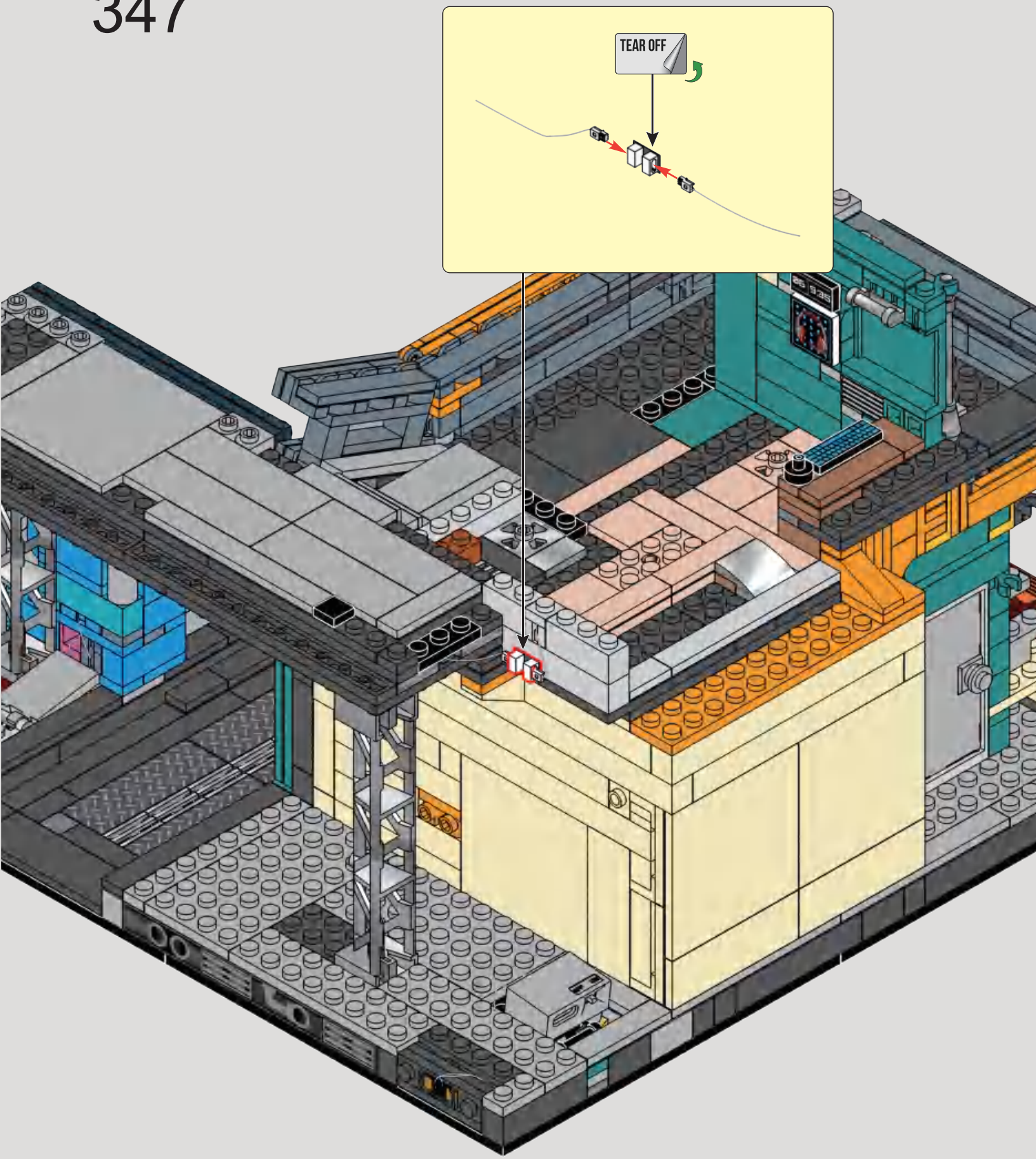

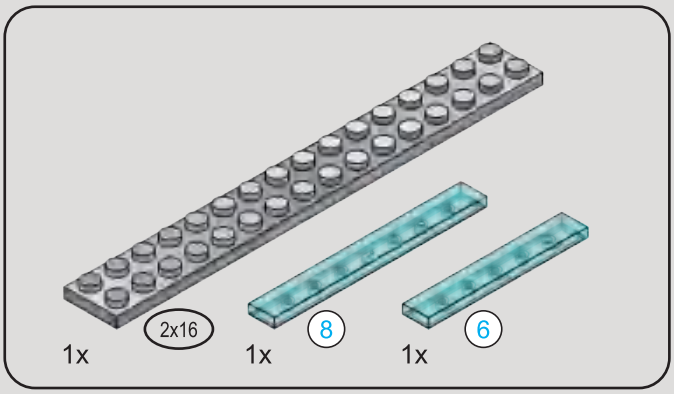

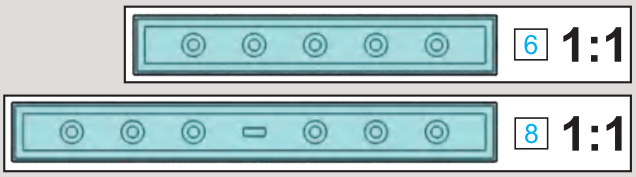

348

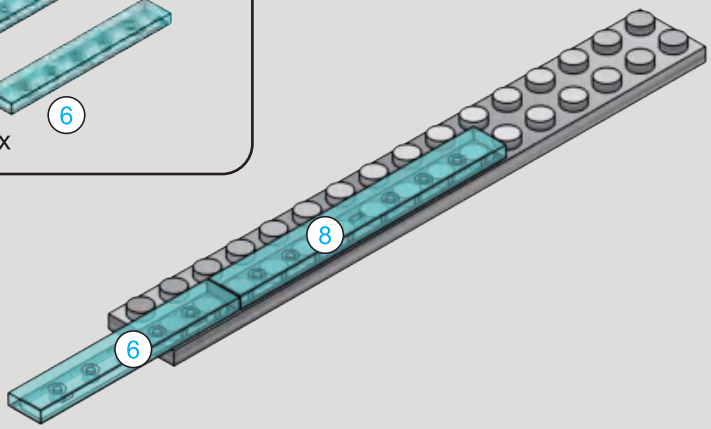

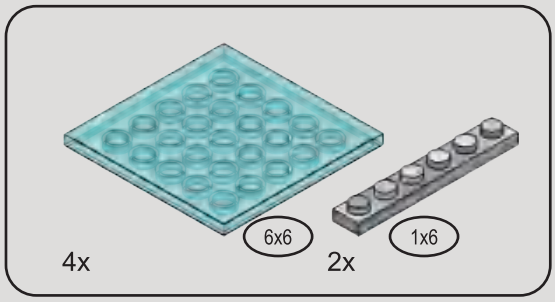

349

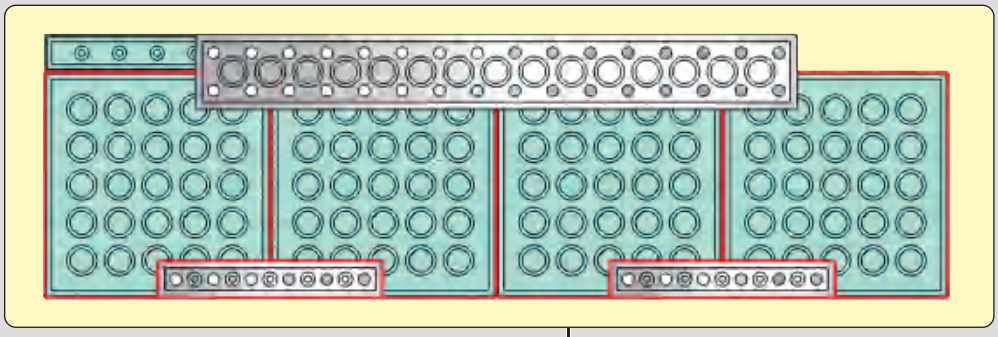

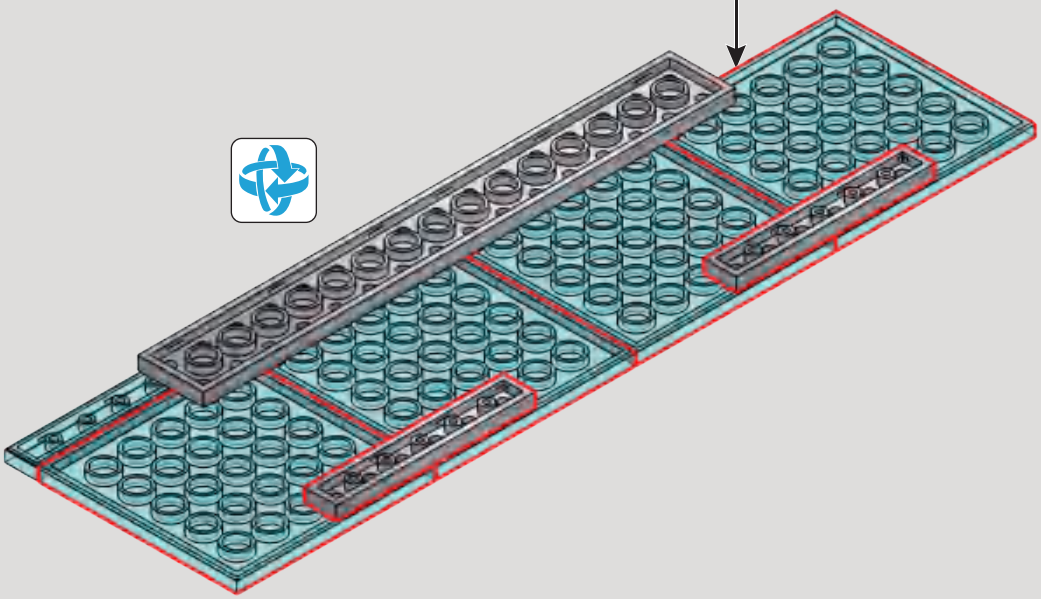

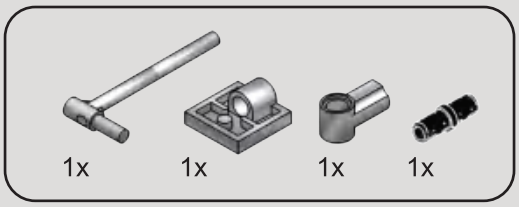

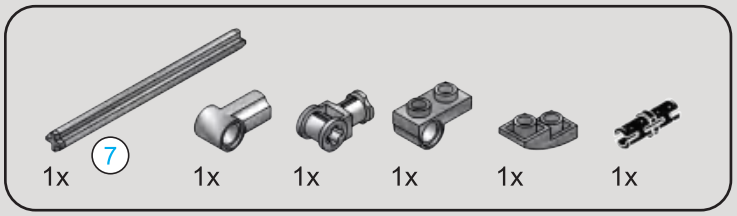

350

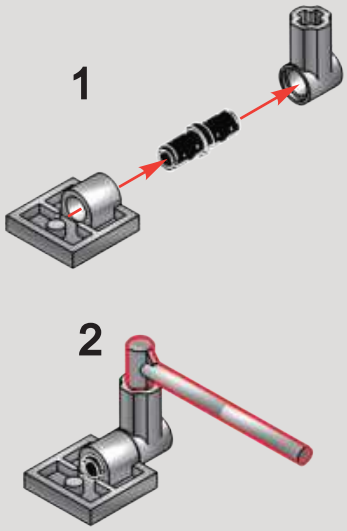

351

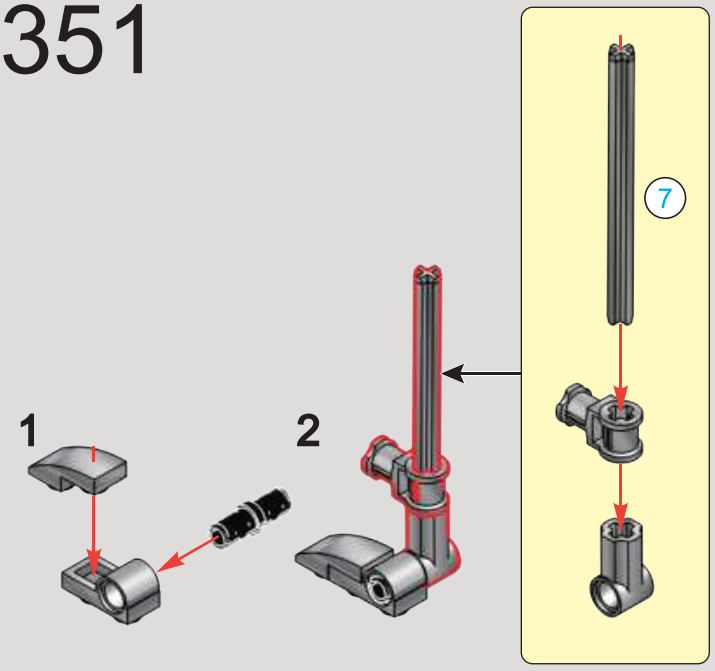

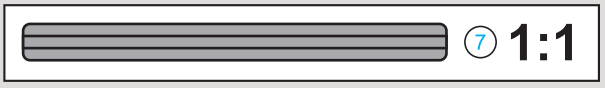

352

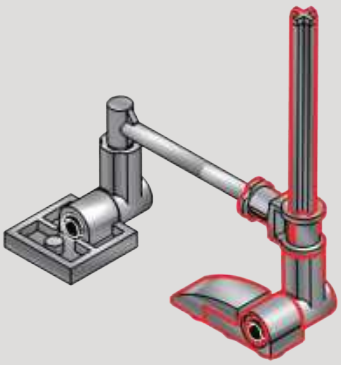

353

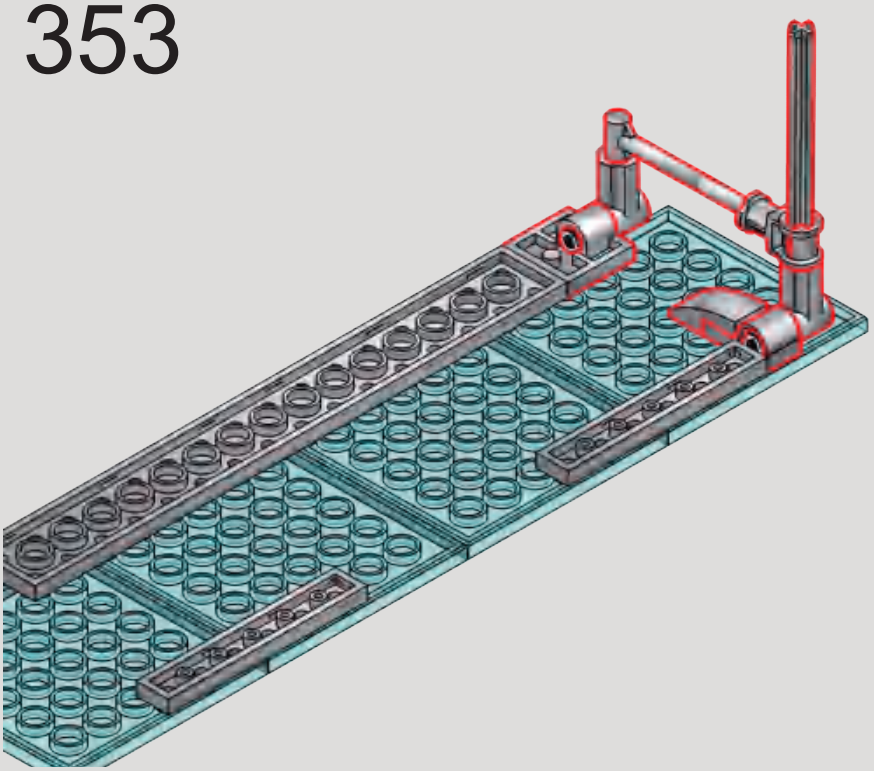

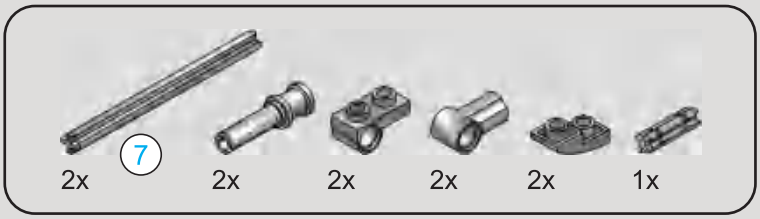

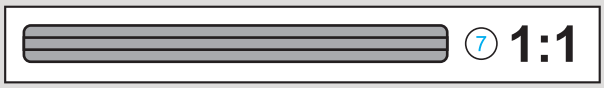

354

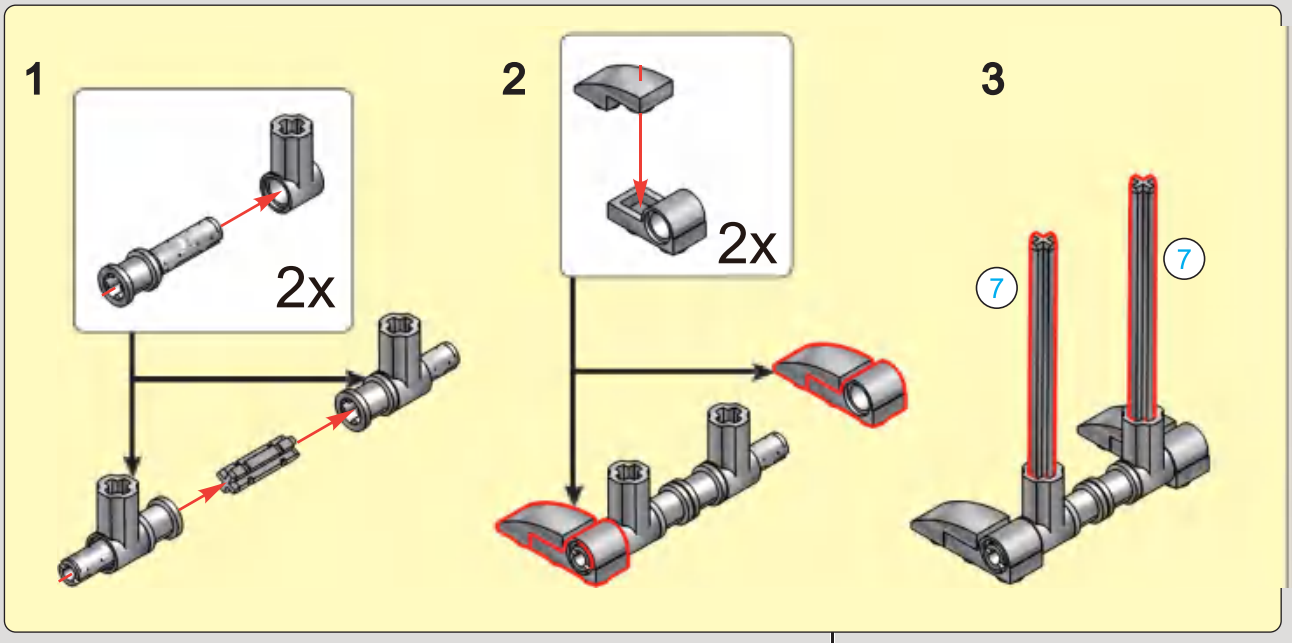

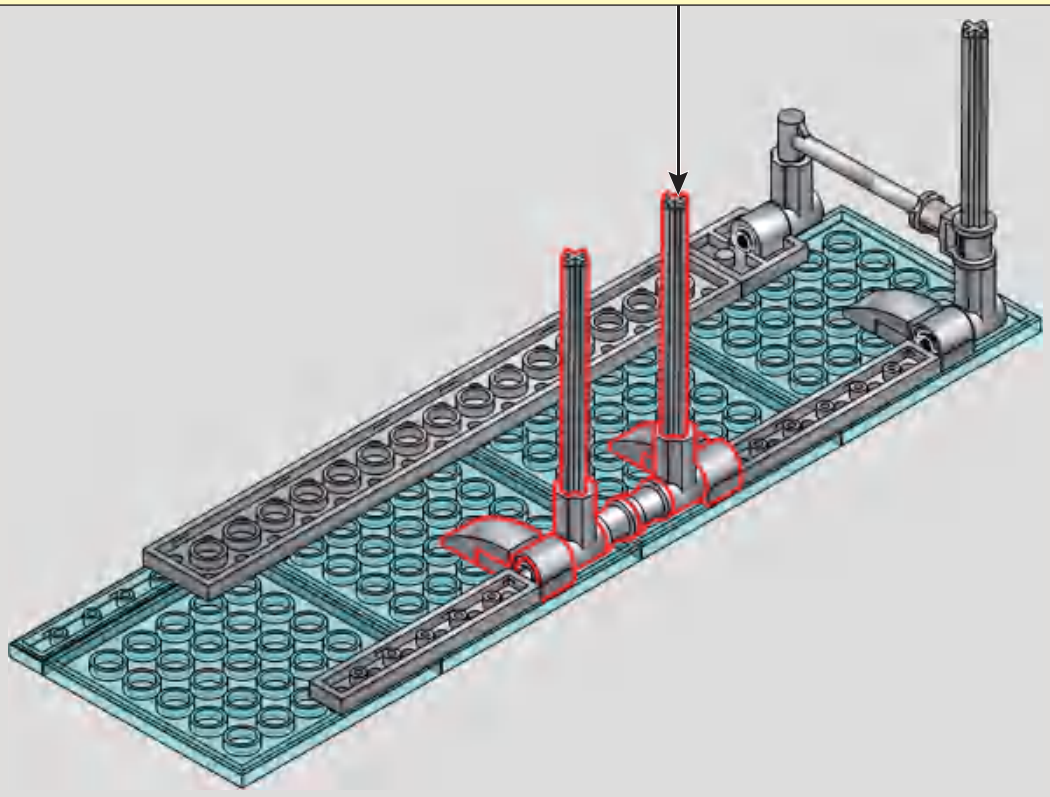

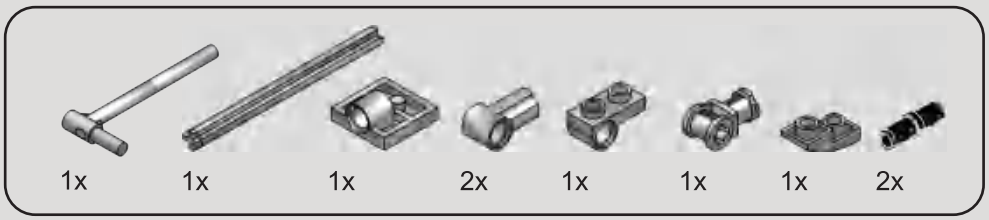

355

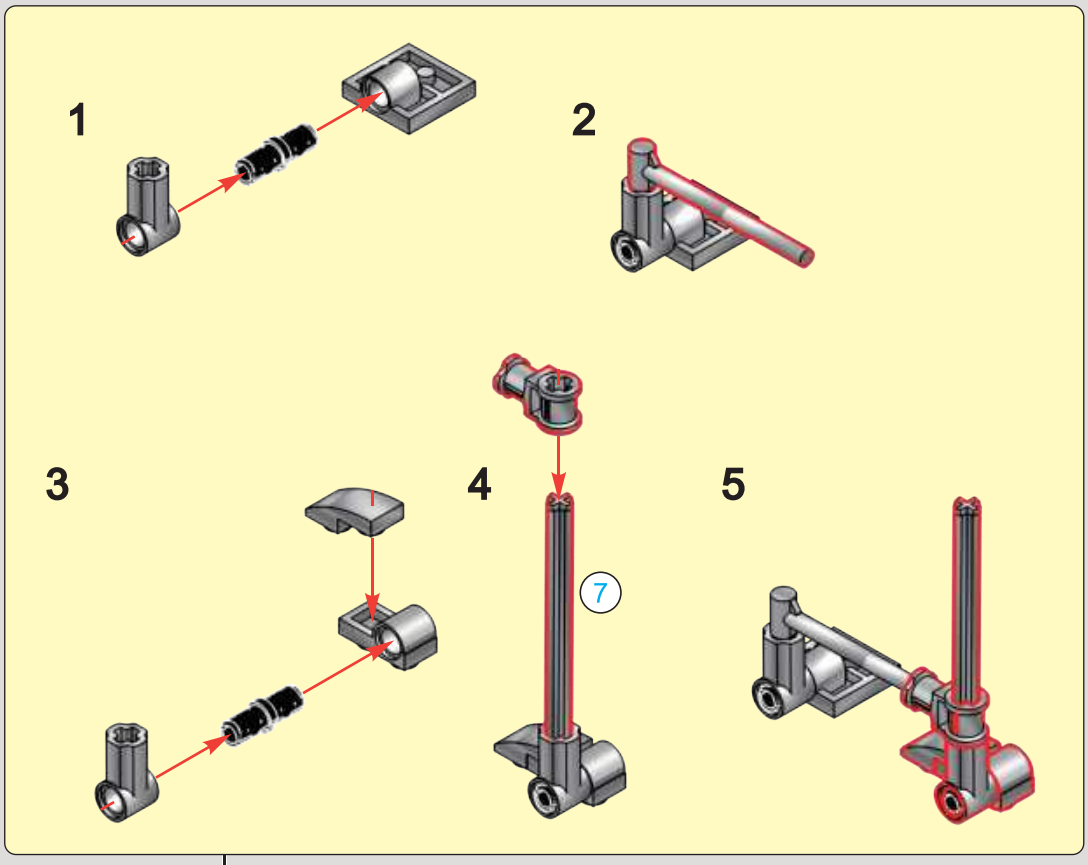

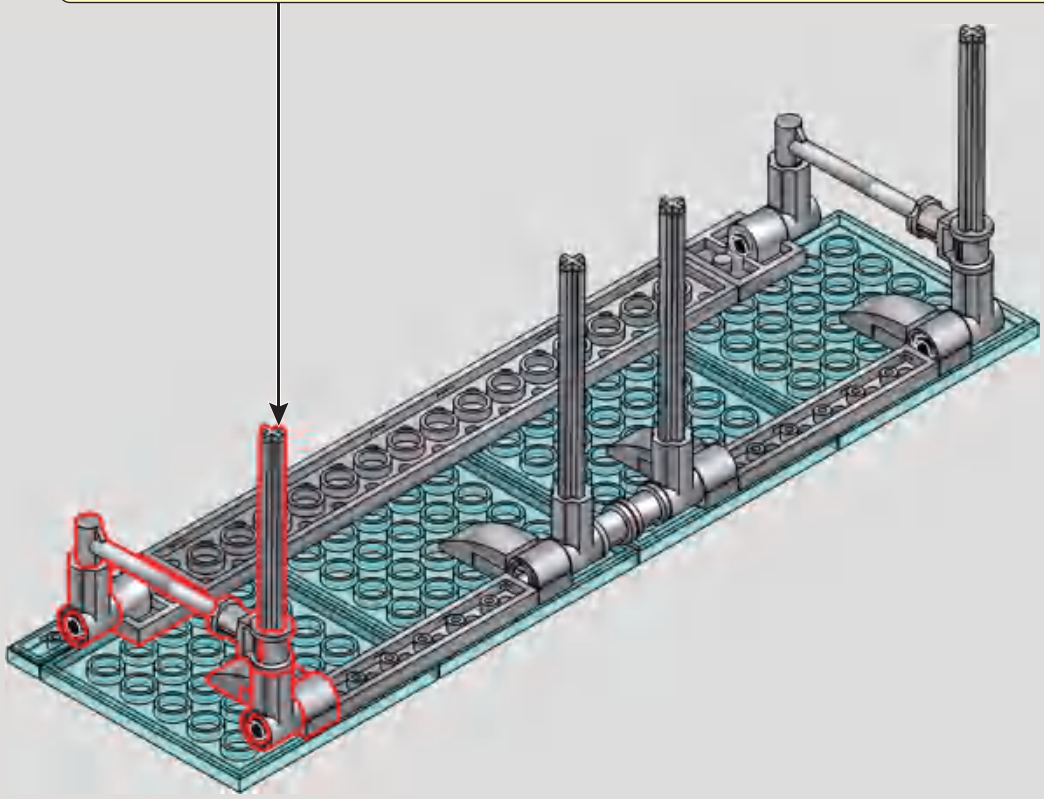

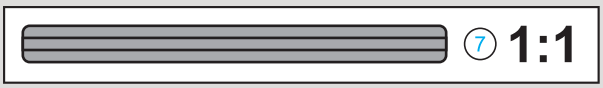

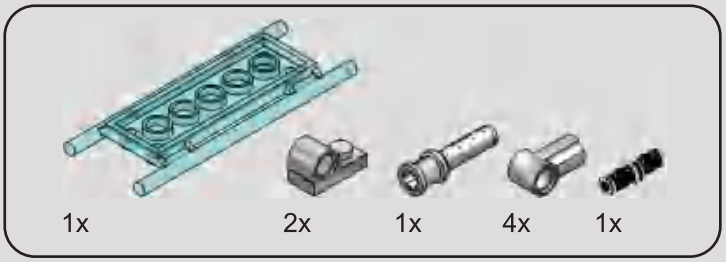

356

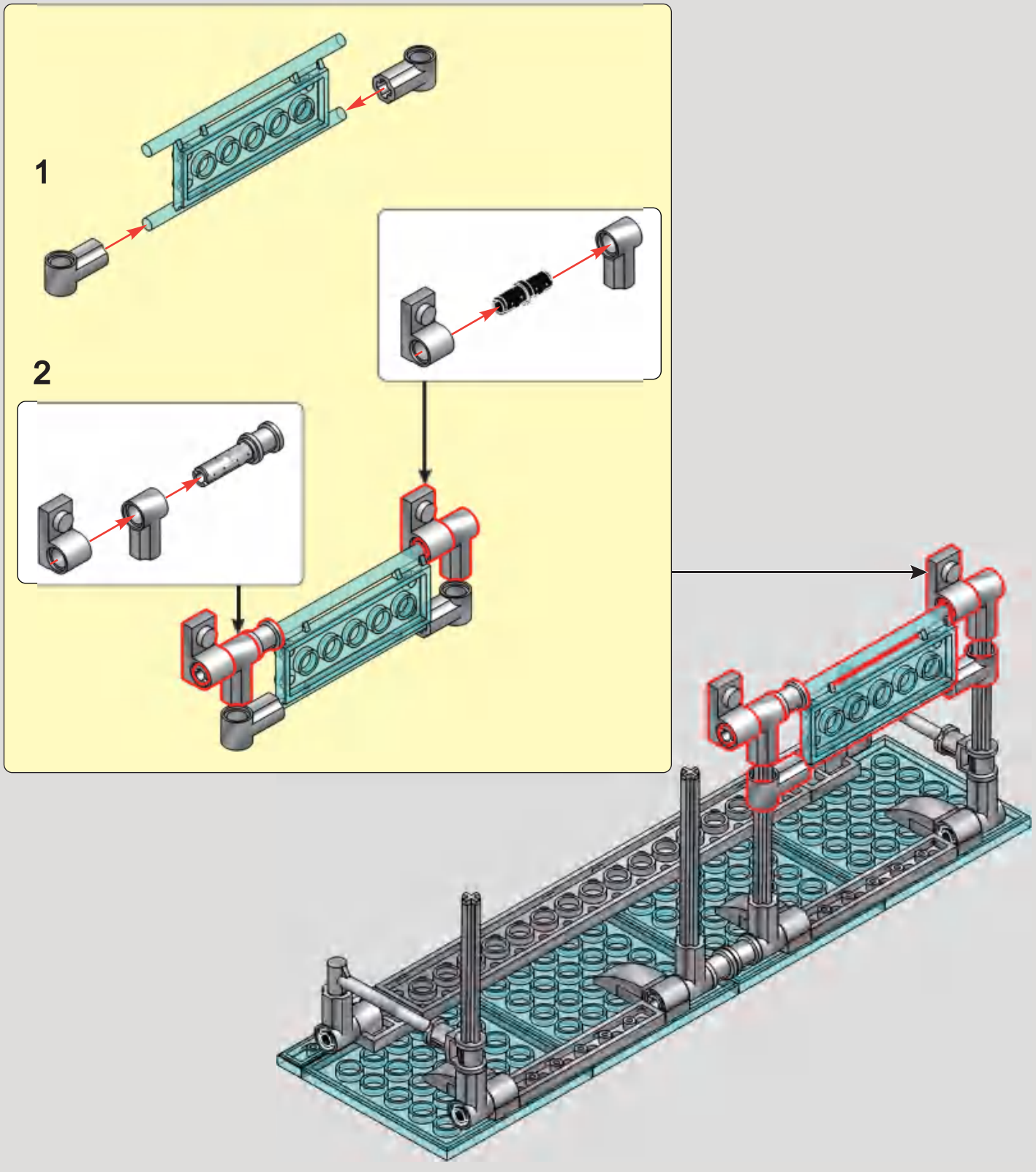

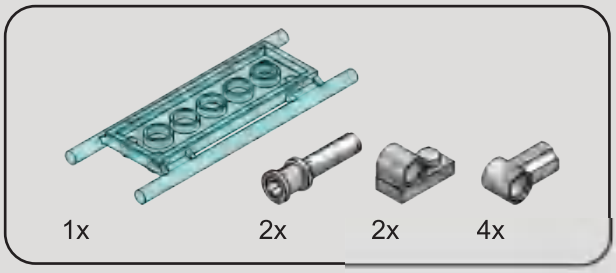

357

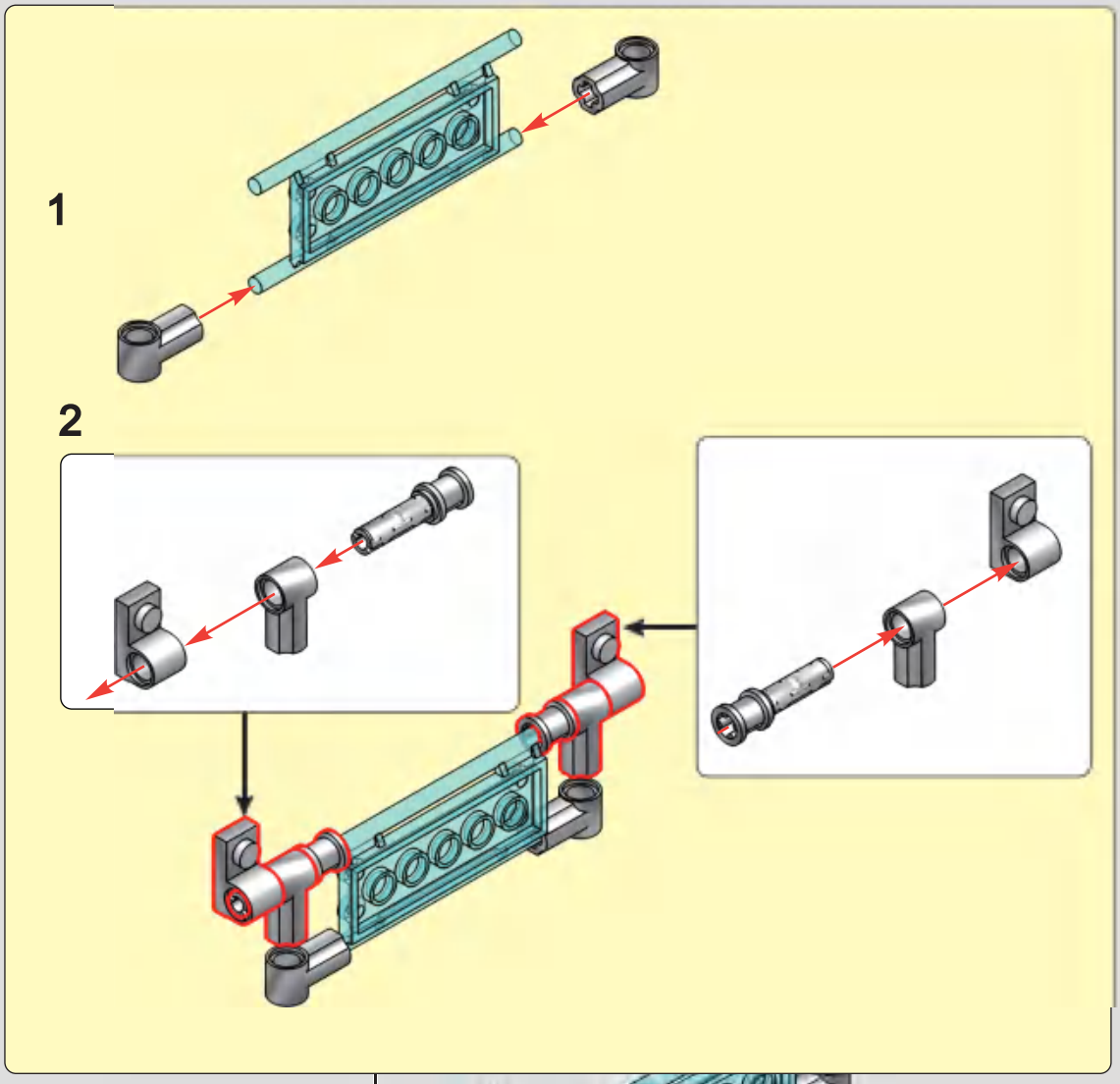

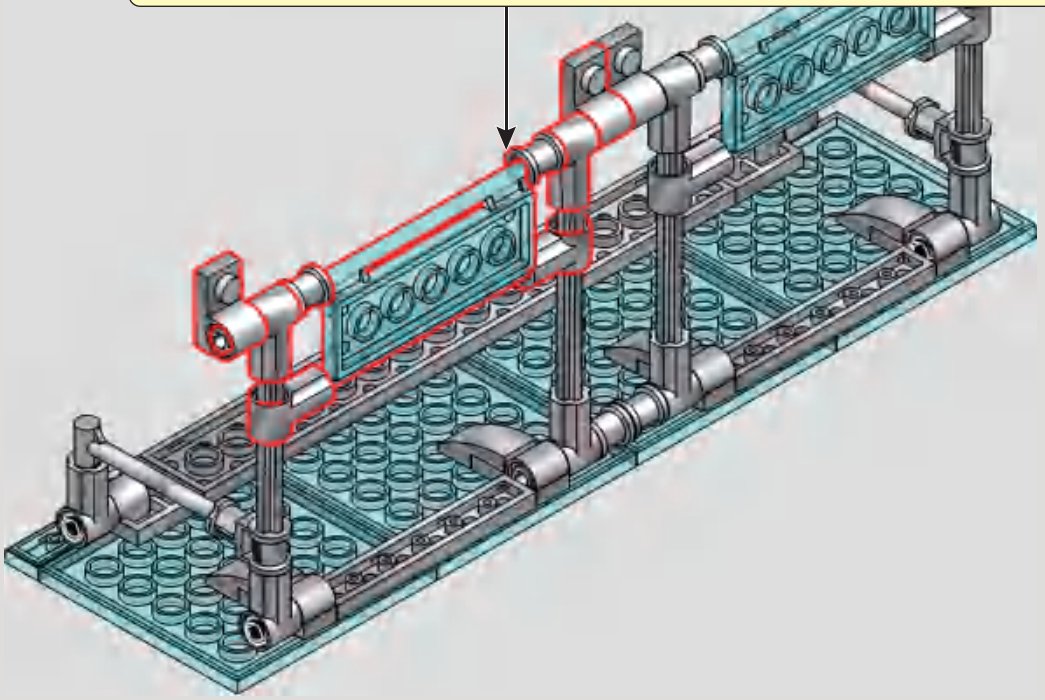

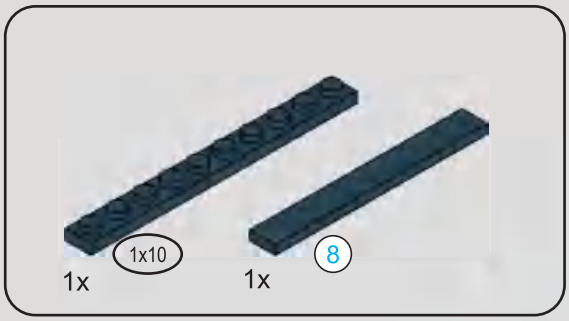

358

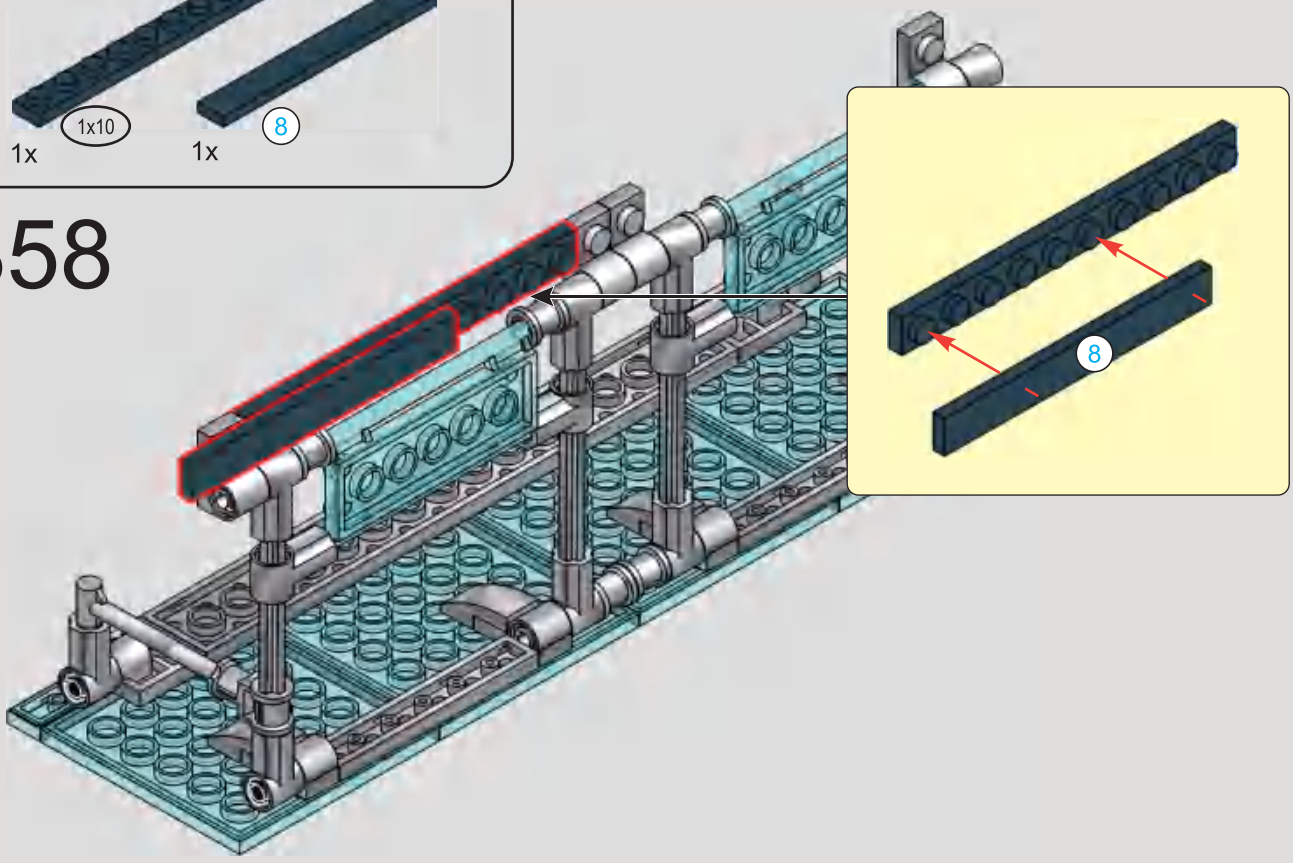

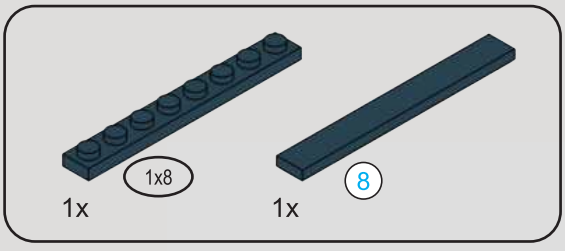

359

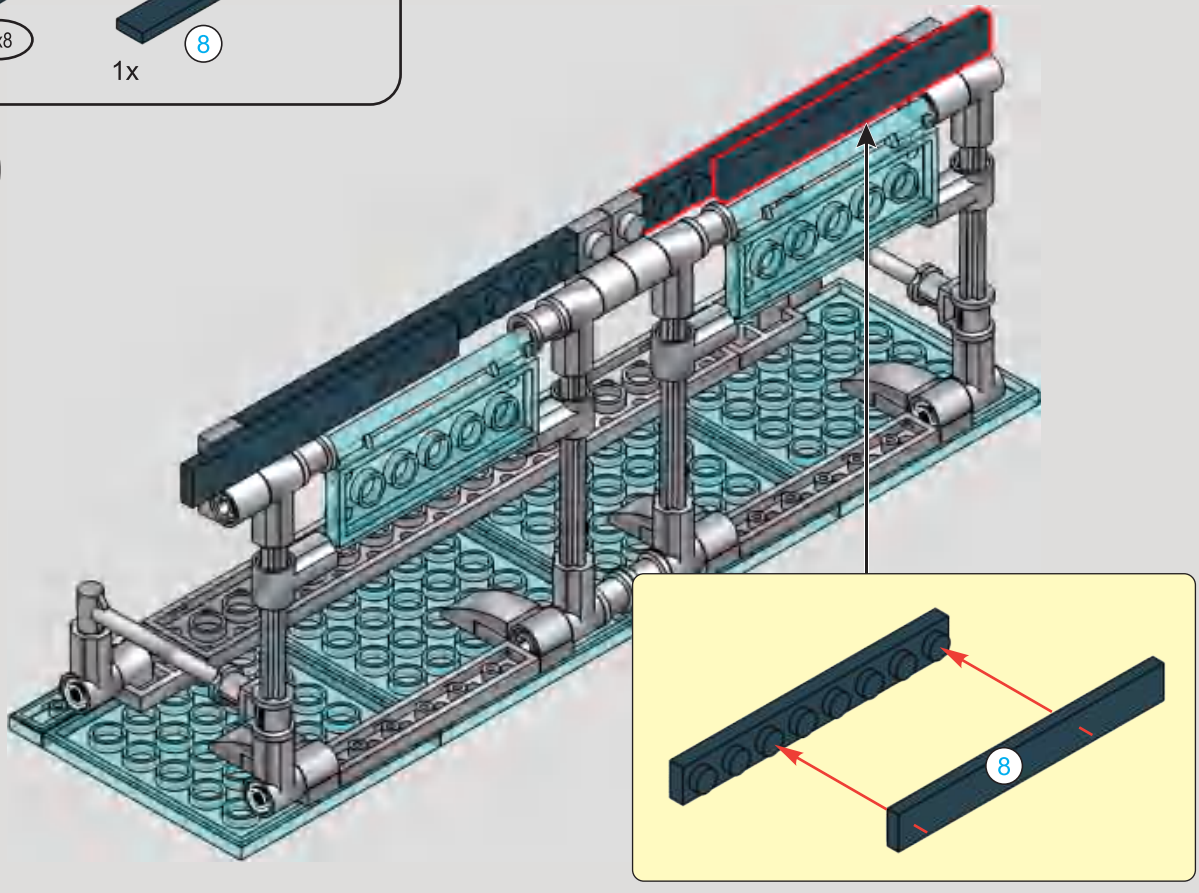

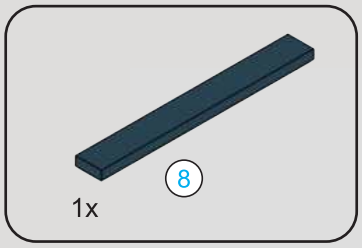

360

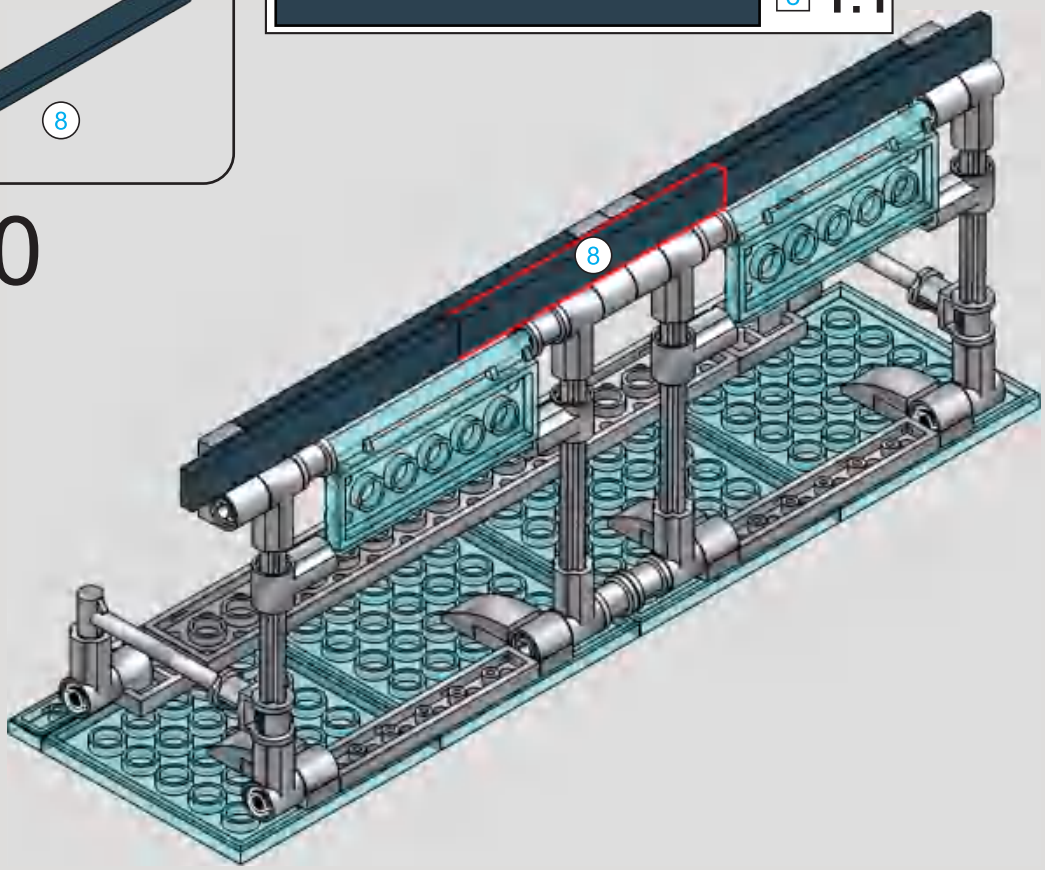

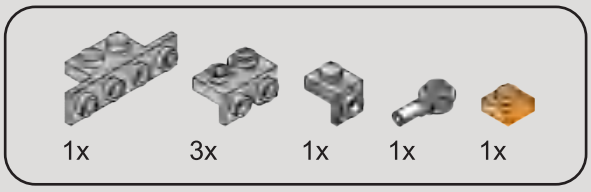

361

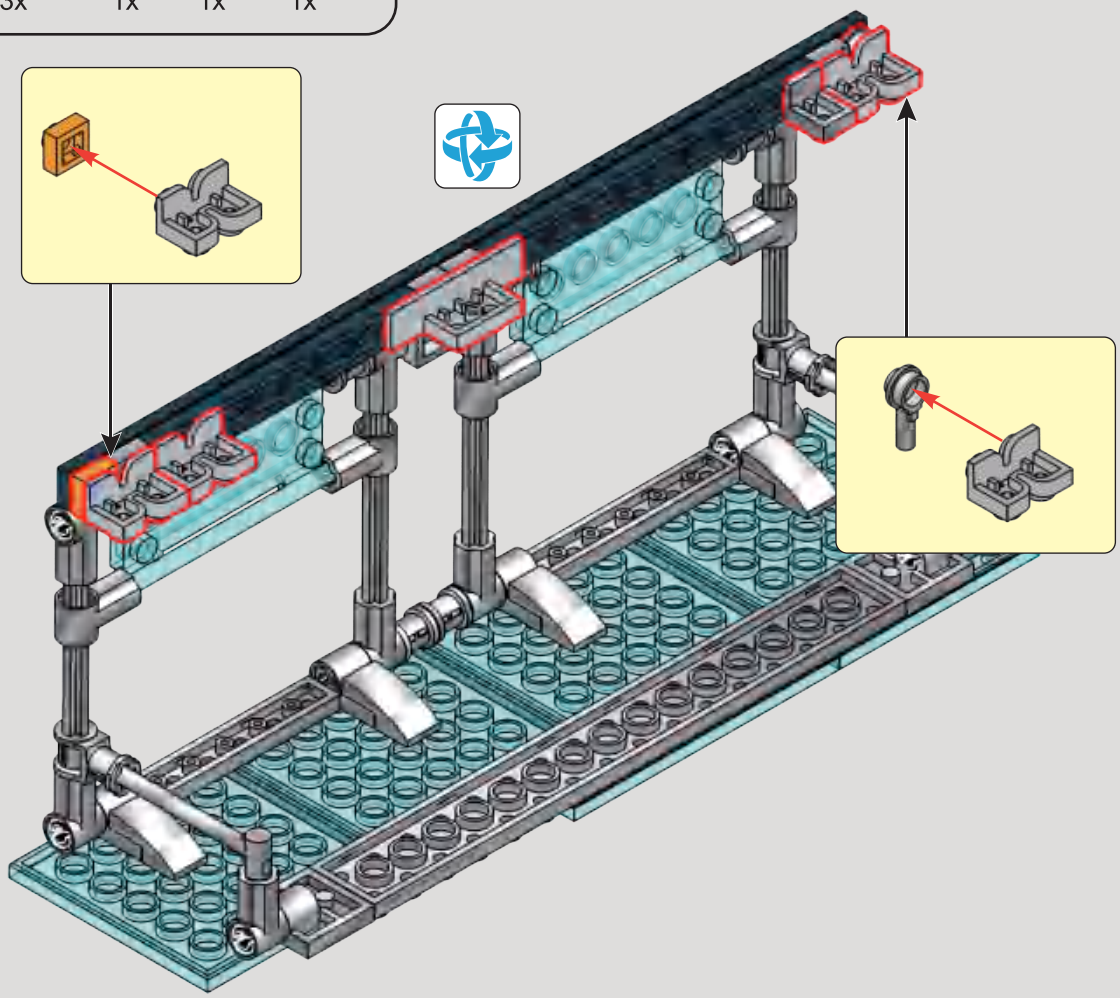

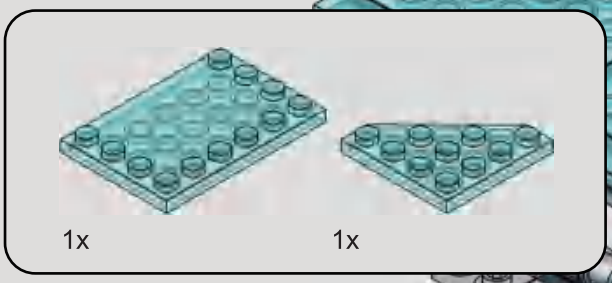

362

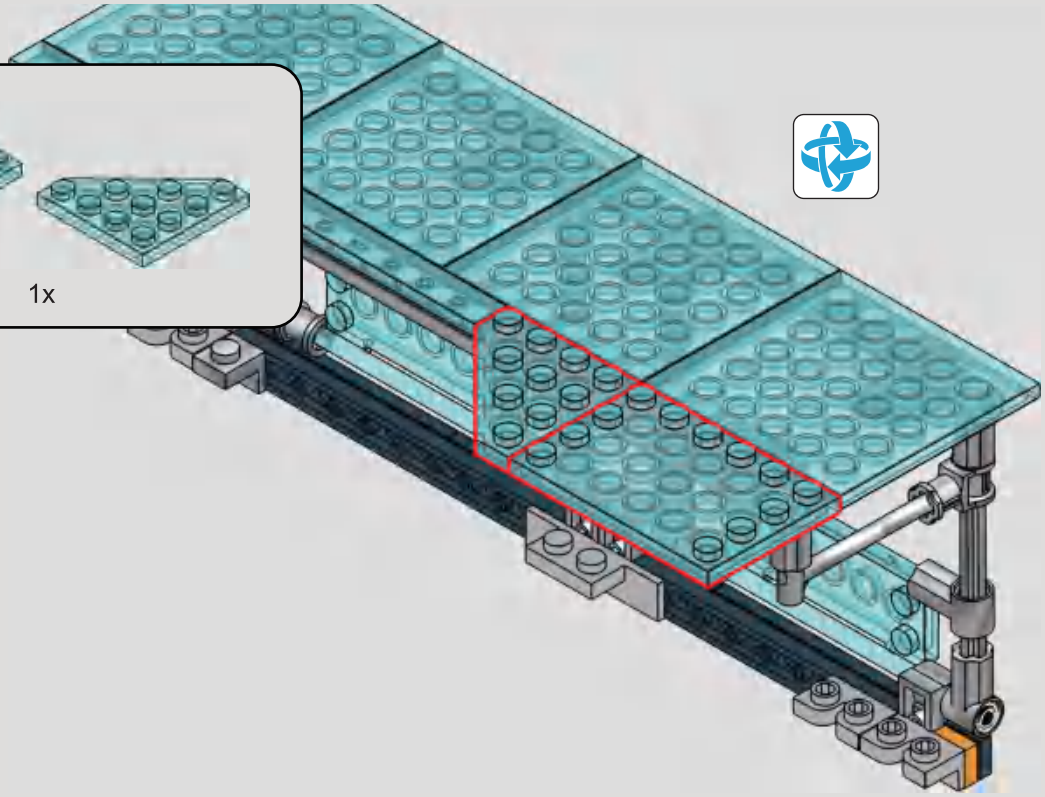

363

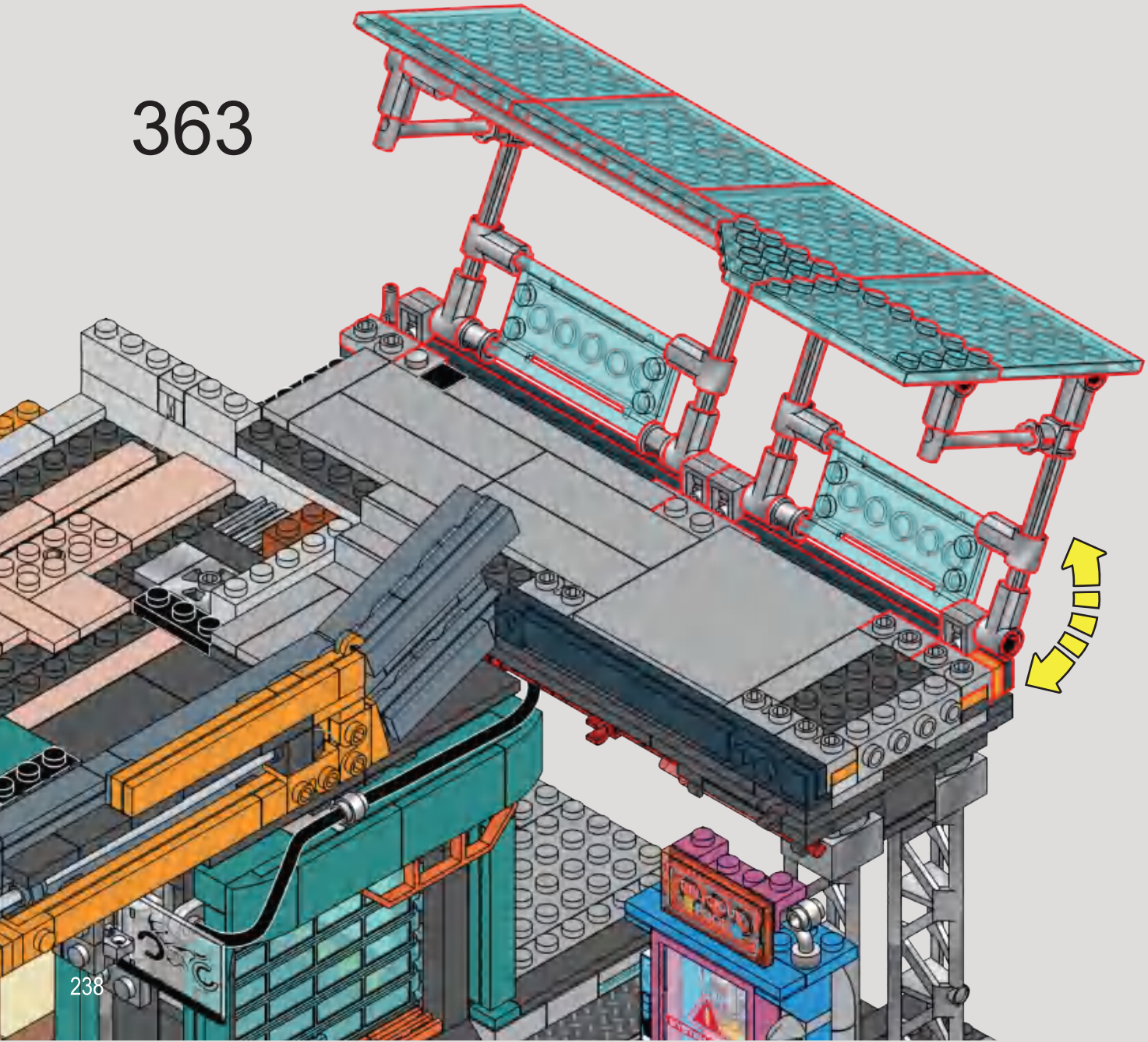

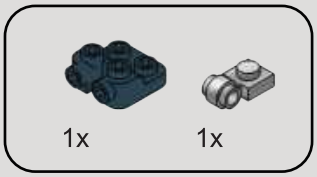

364

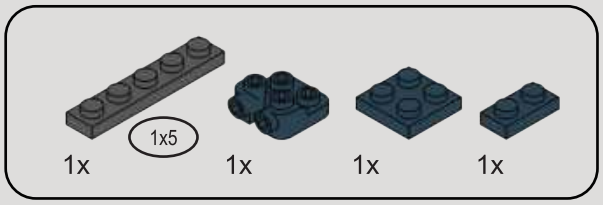

365

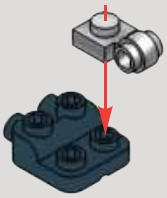

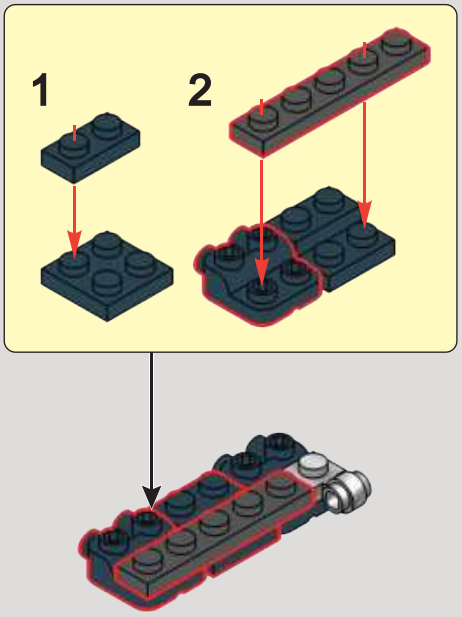

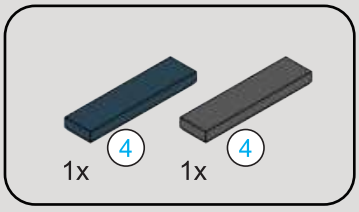

366

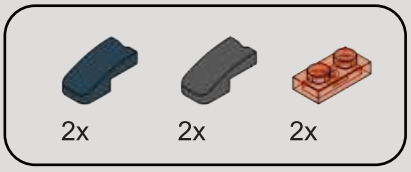

367

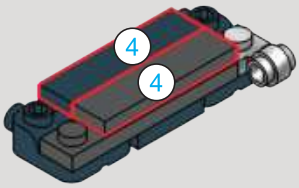

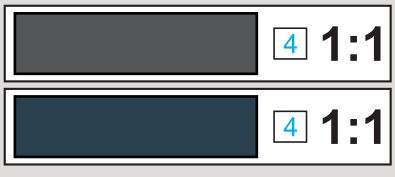

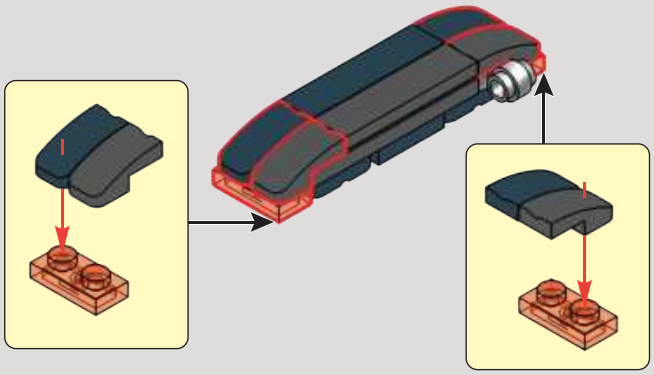

368

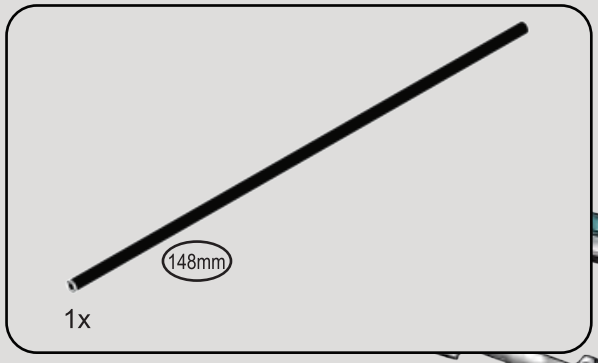

369

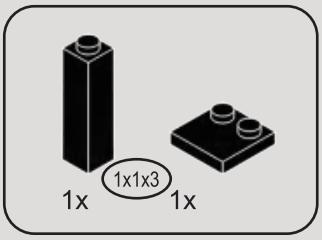

370

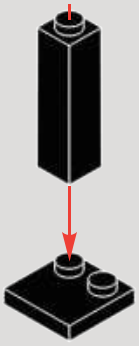

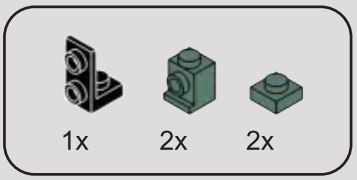

371

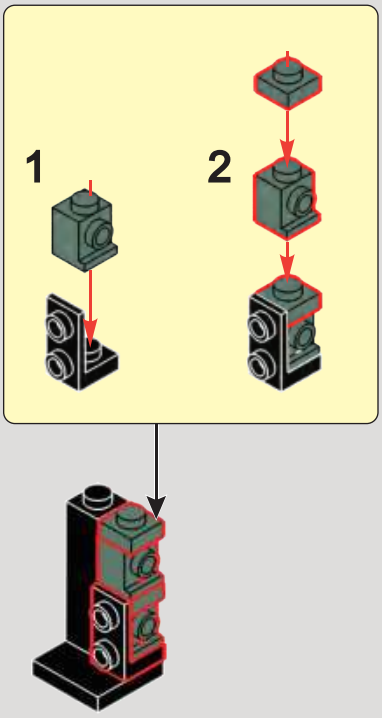

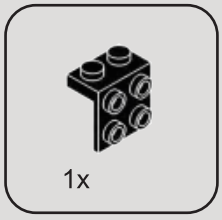

372

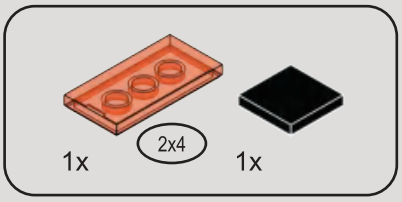

373

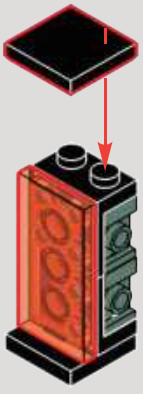

374

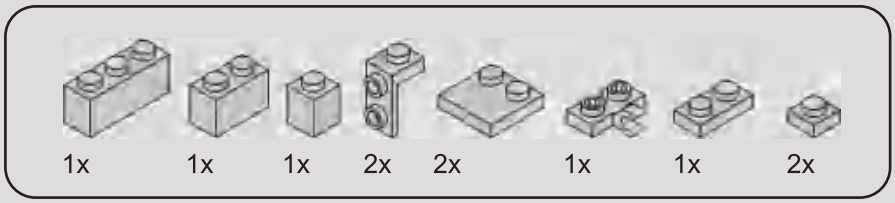

375

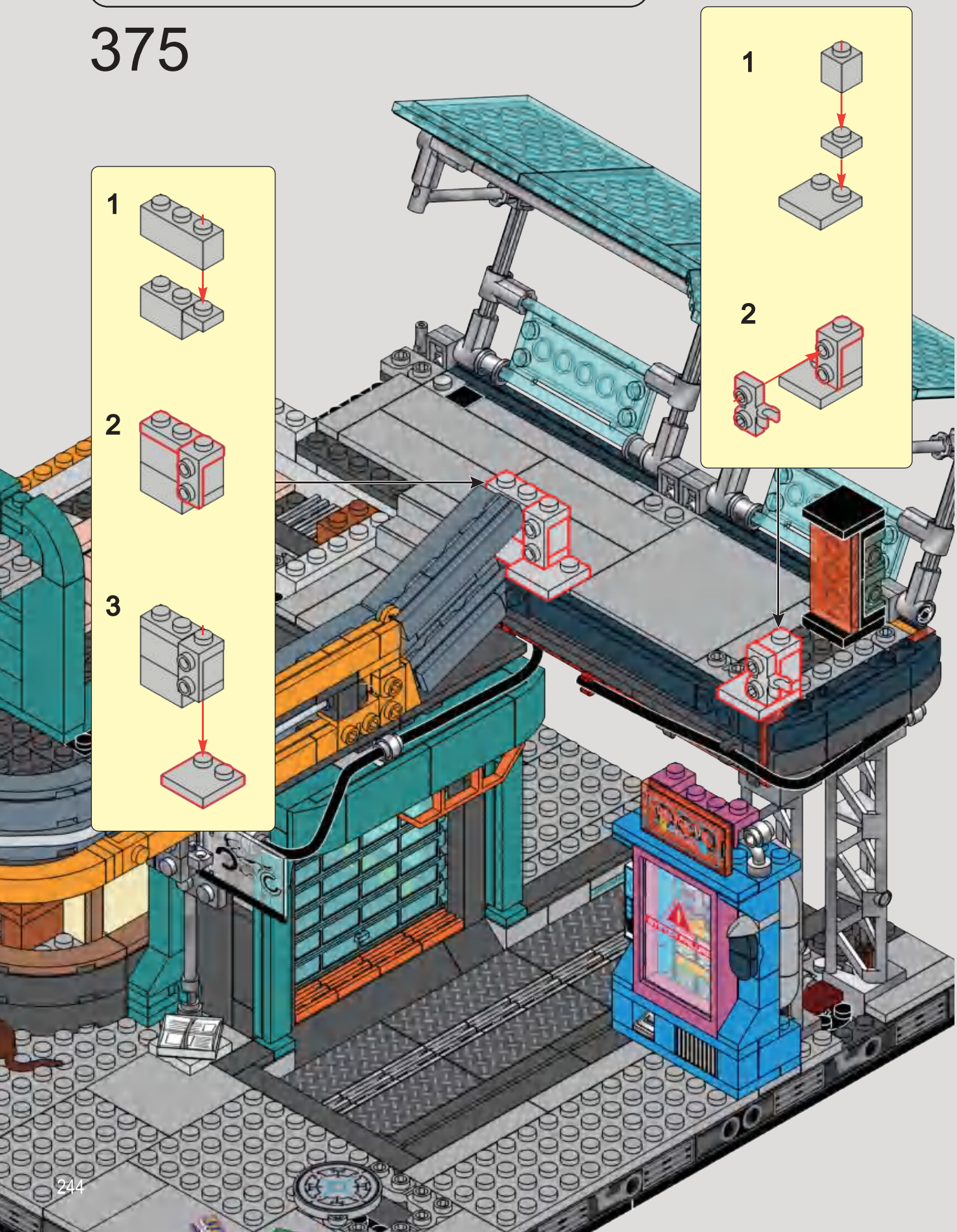

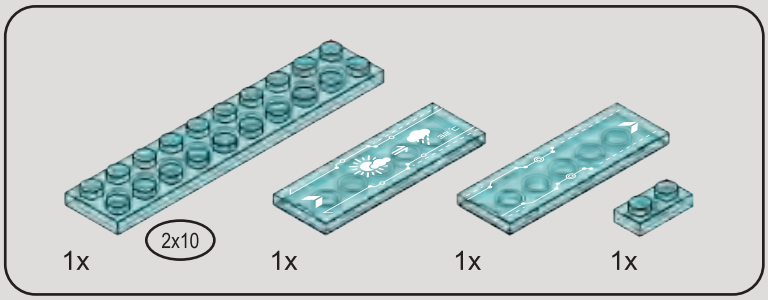

376

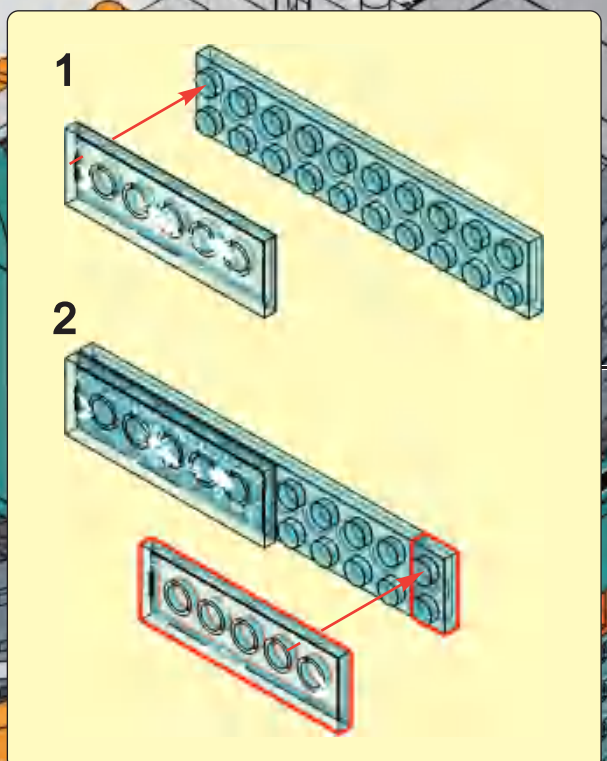

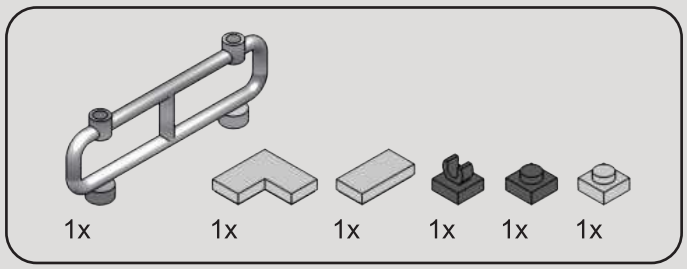

377

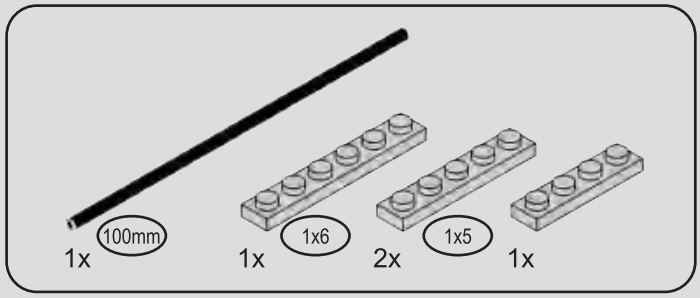

378

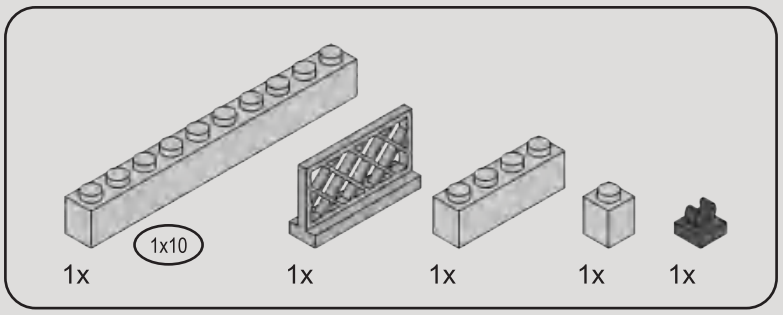

379

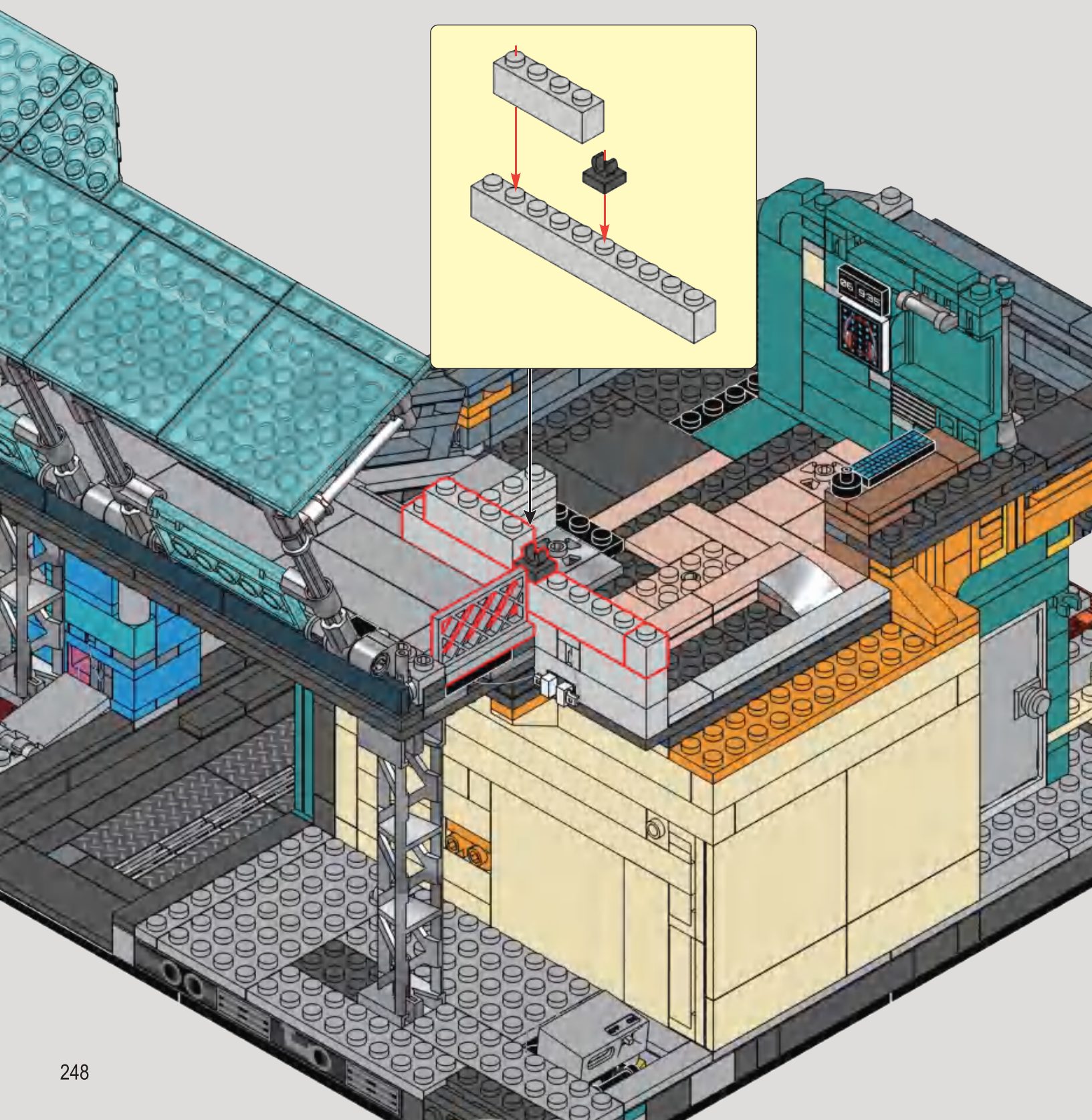

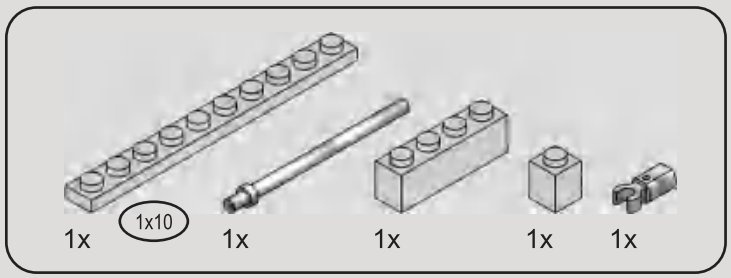

380

7
F
3

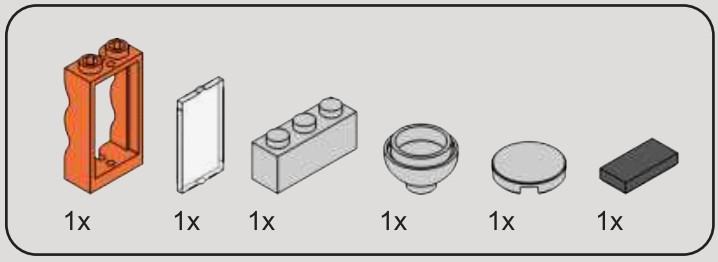

381

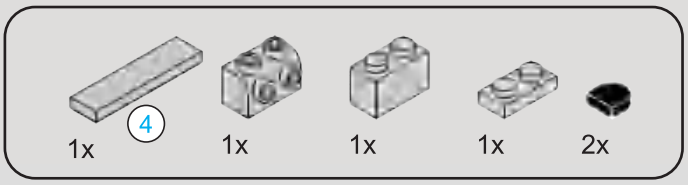

382

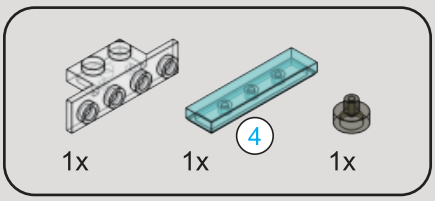

383

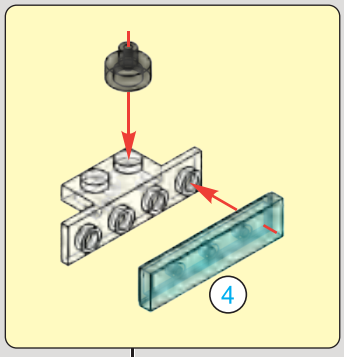

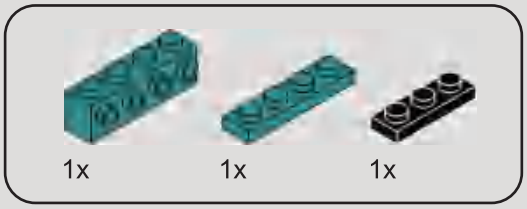

384

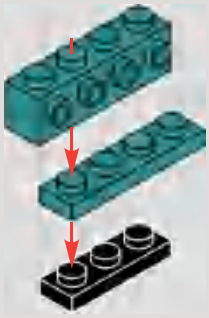

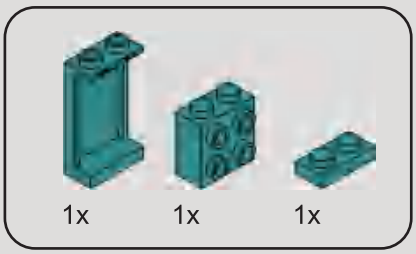

385

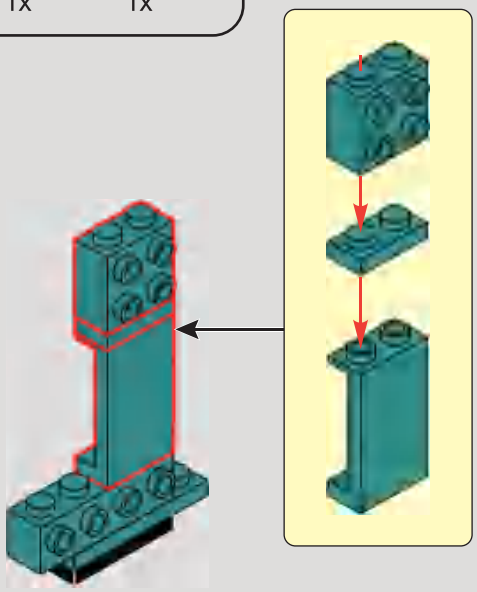

386

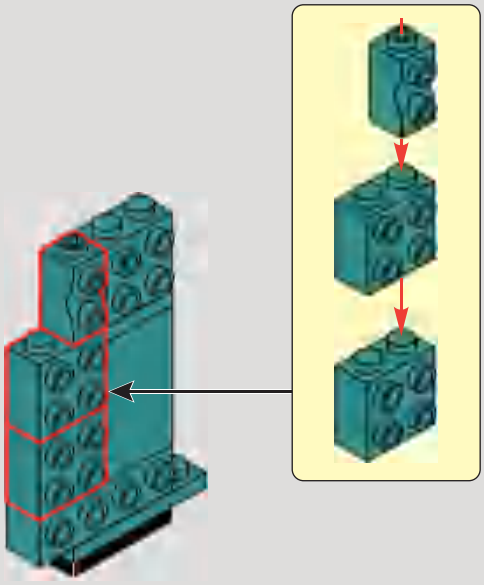

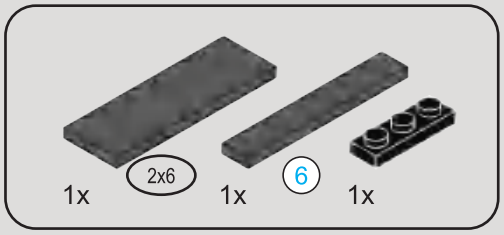

387

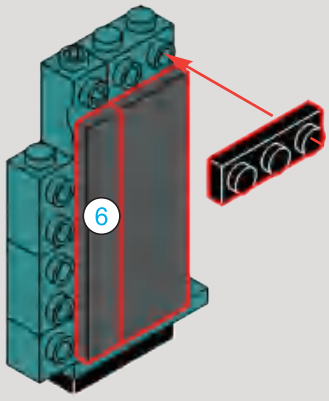

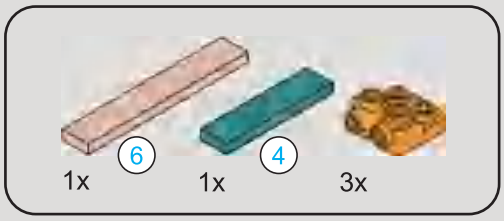

388

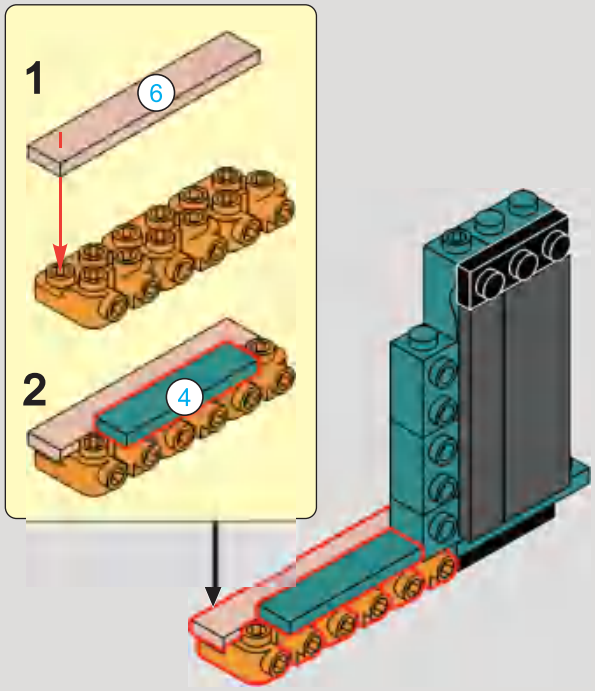

389

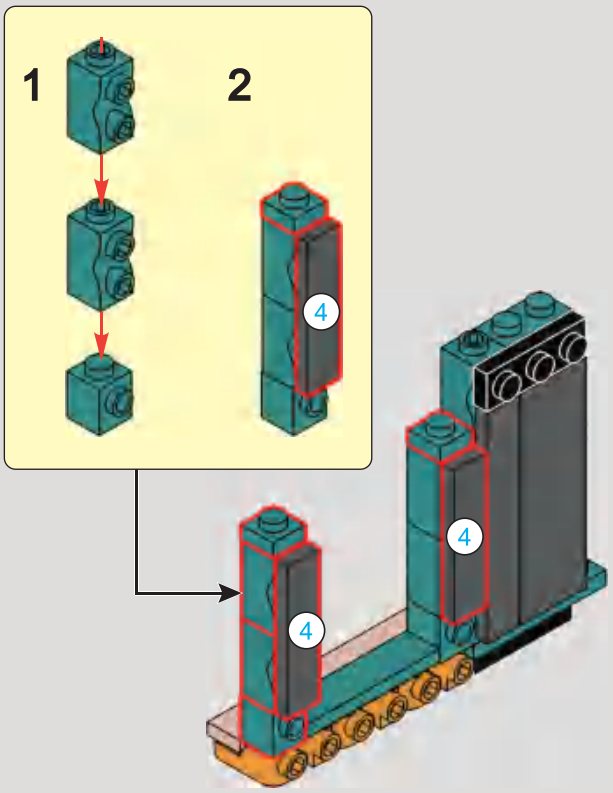

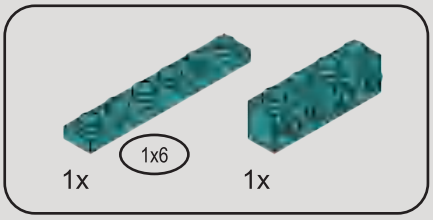

390

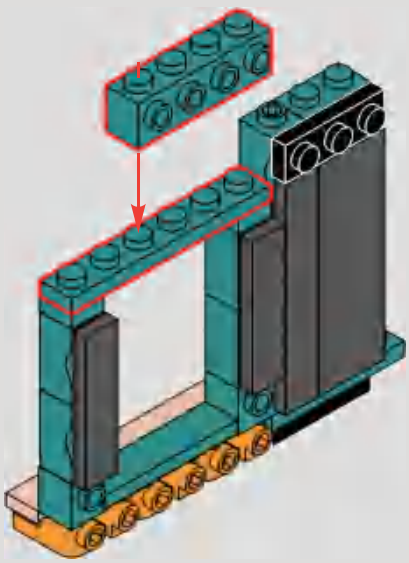

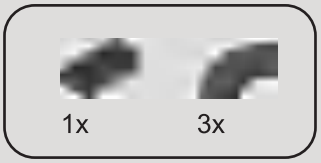

391

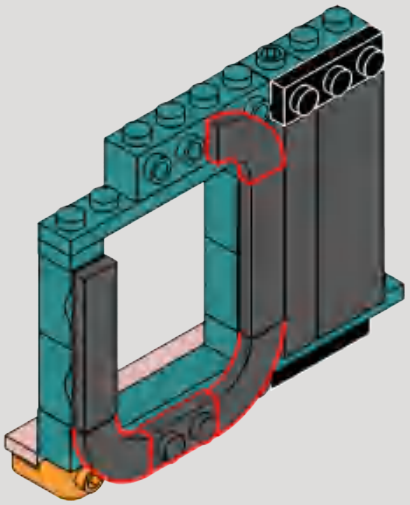

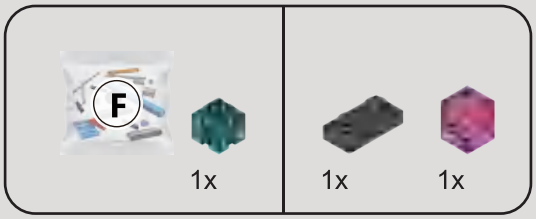

392

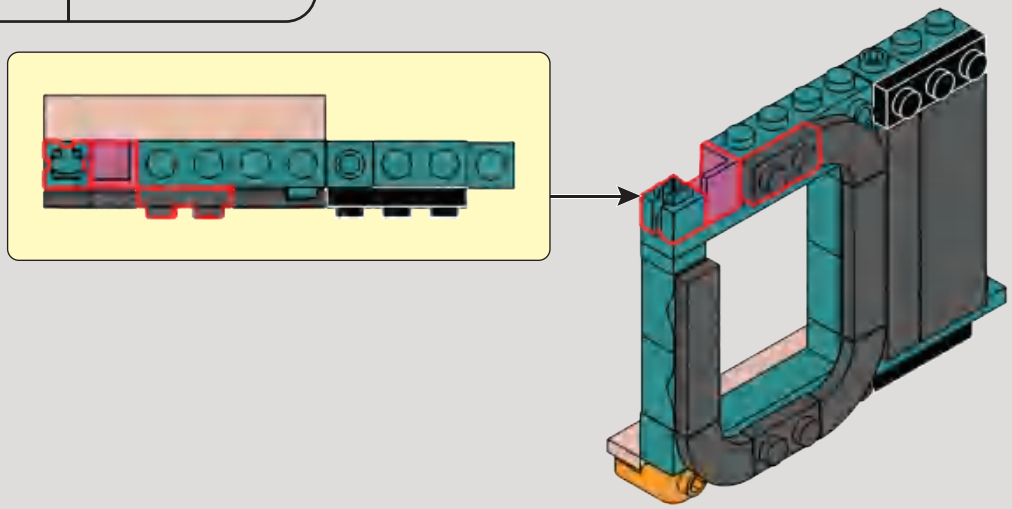

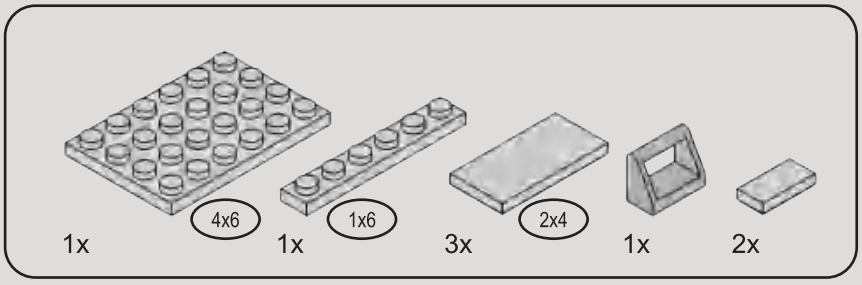

393

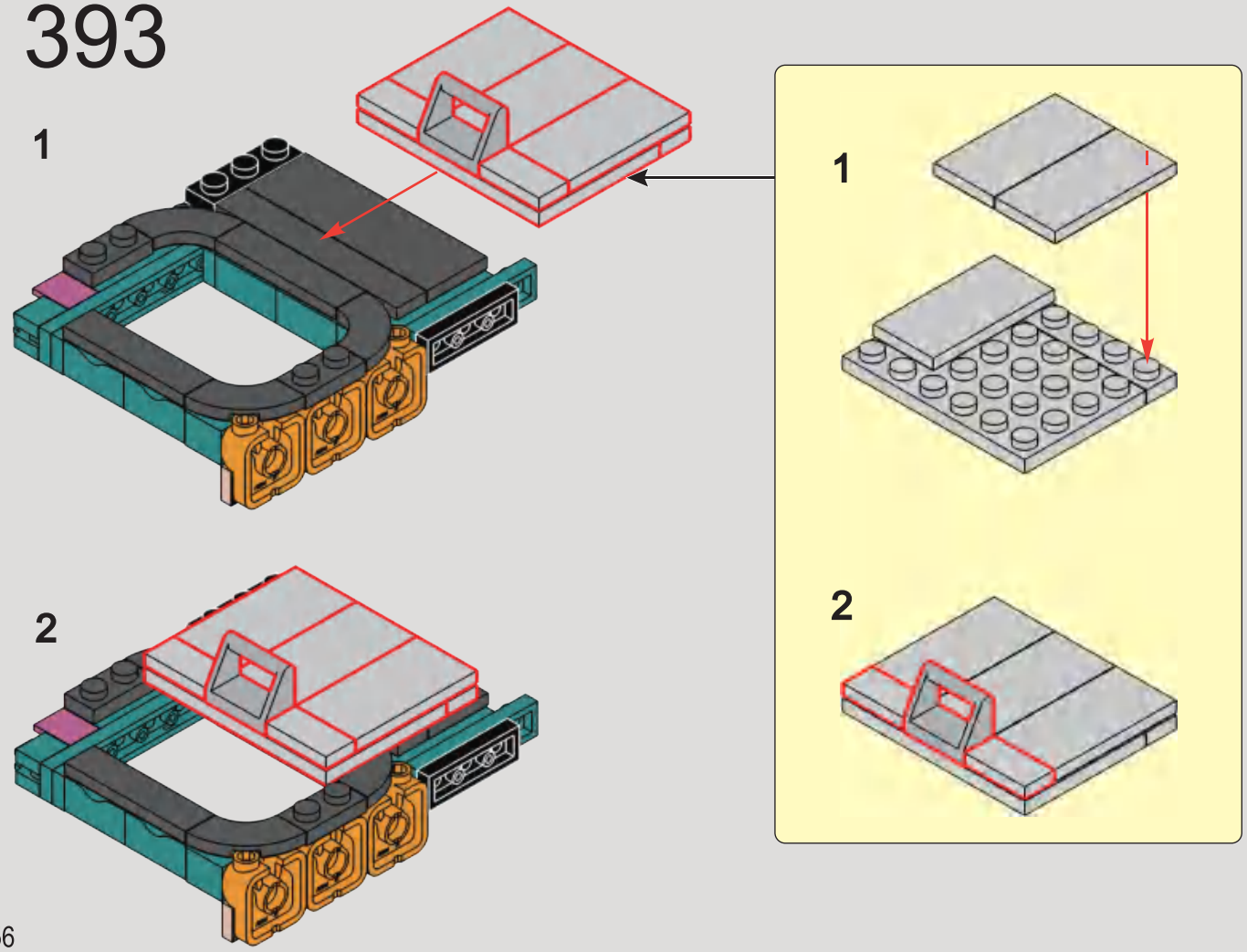

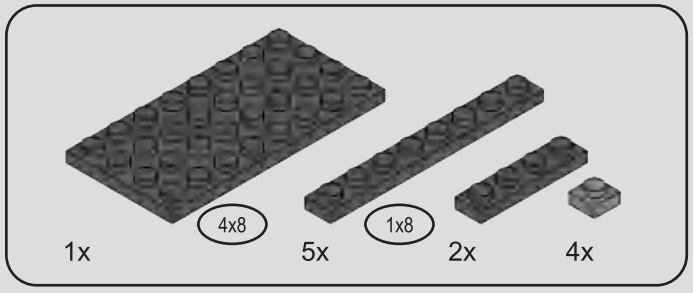

394

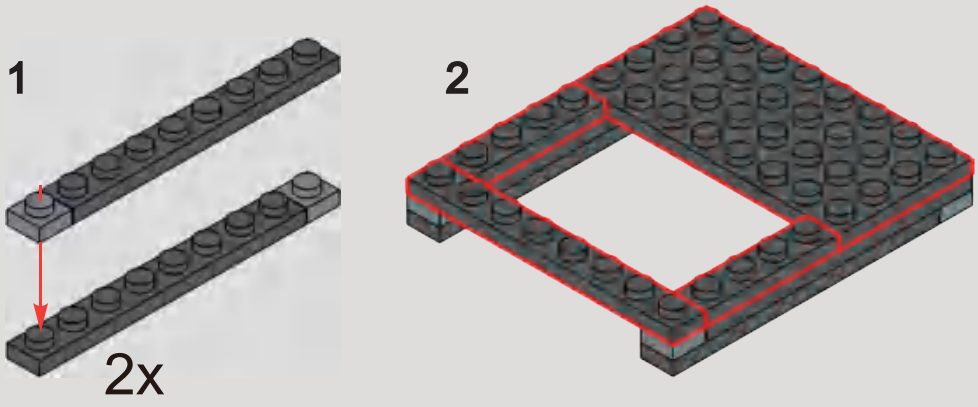

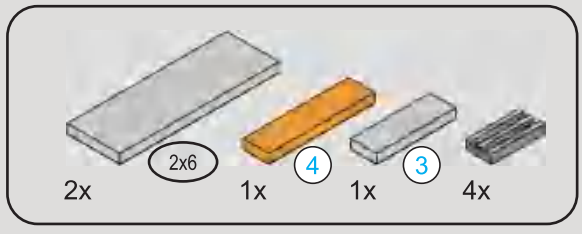

395

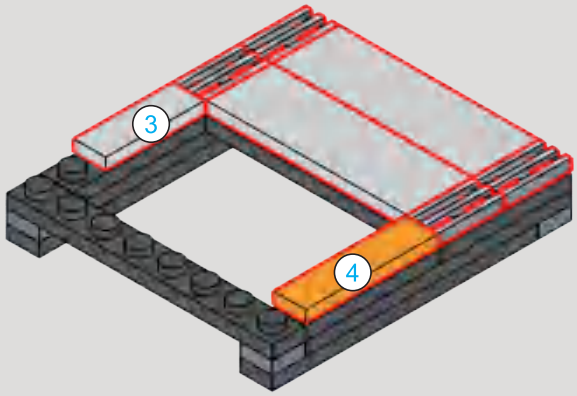

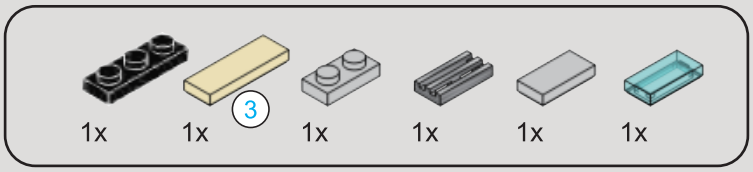

396

1

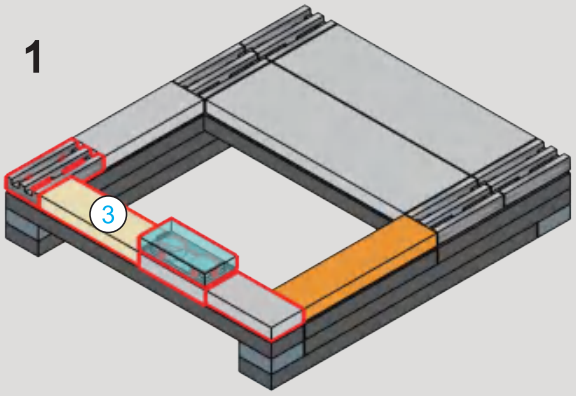

2

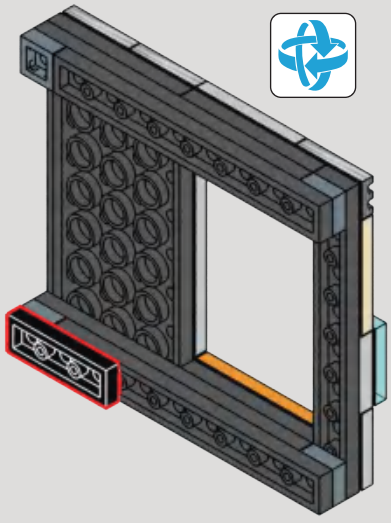

3

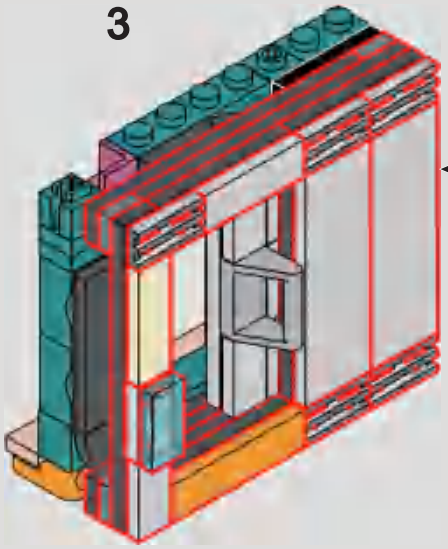

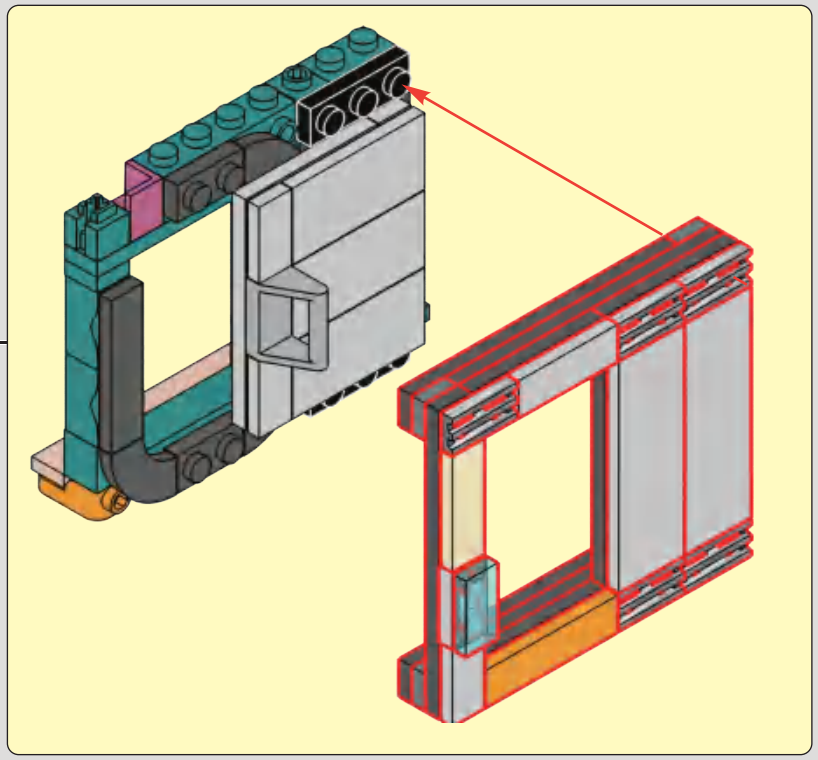

397

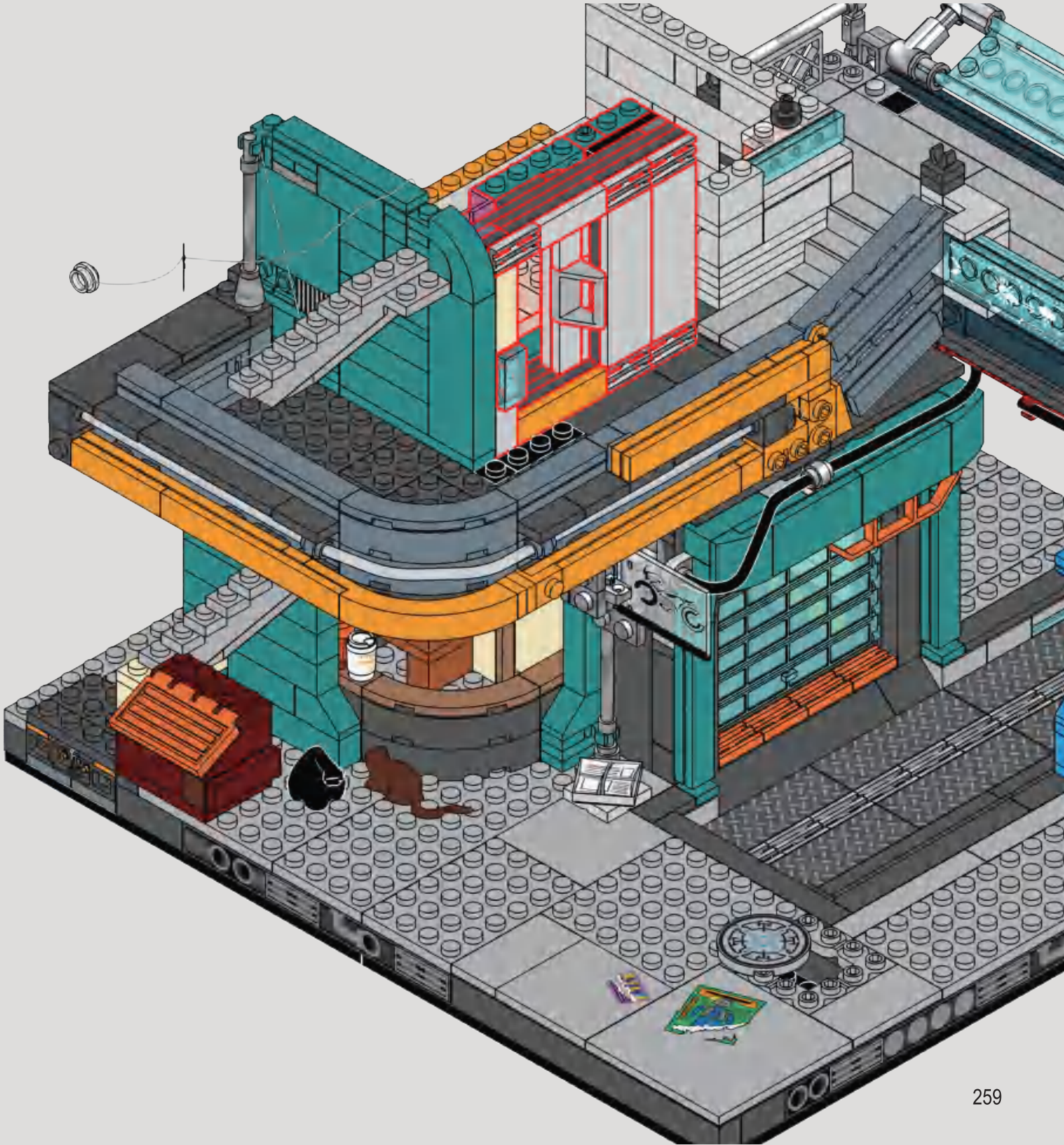

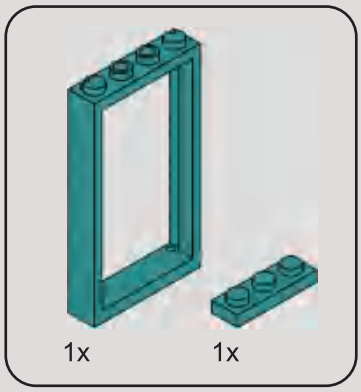

398

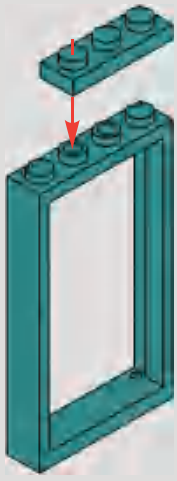

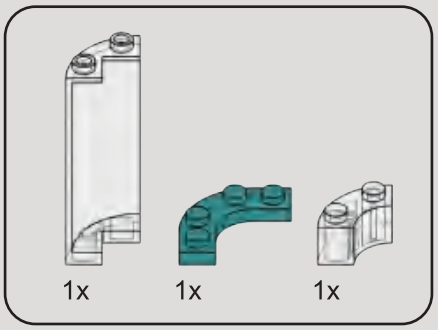

399

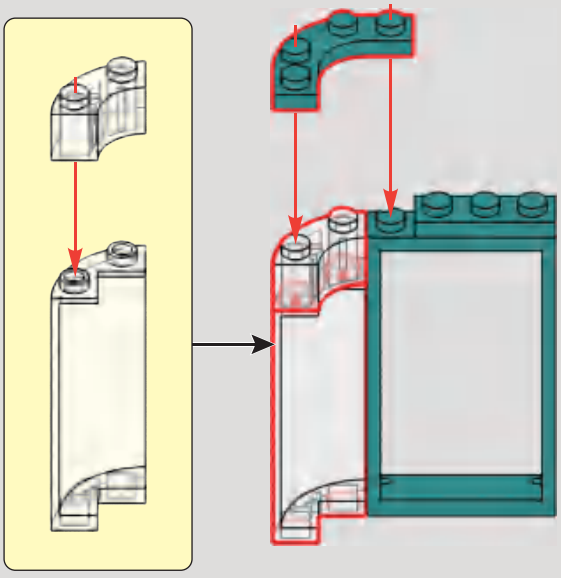

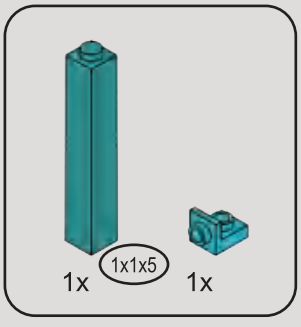

400

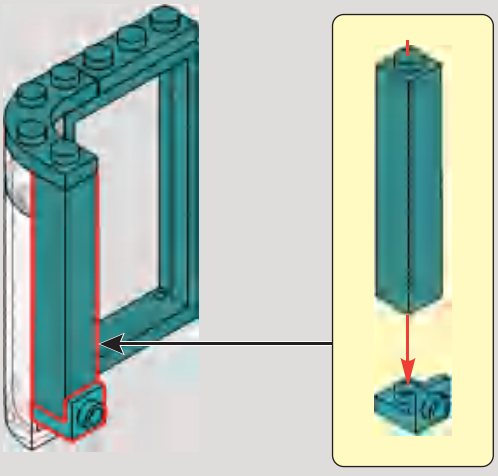

401

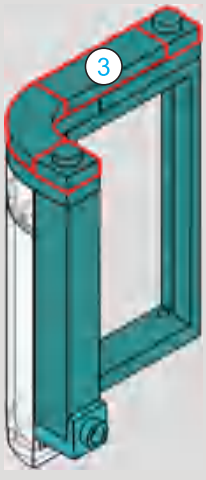

402

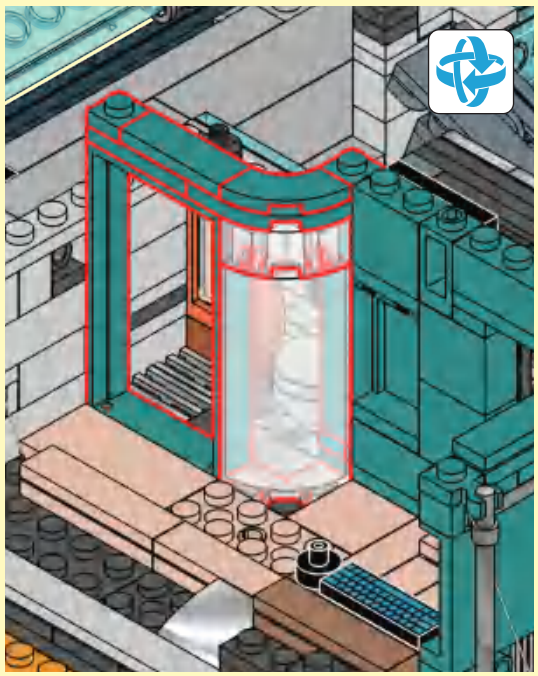

403

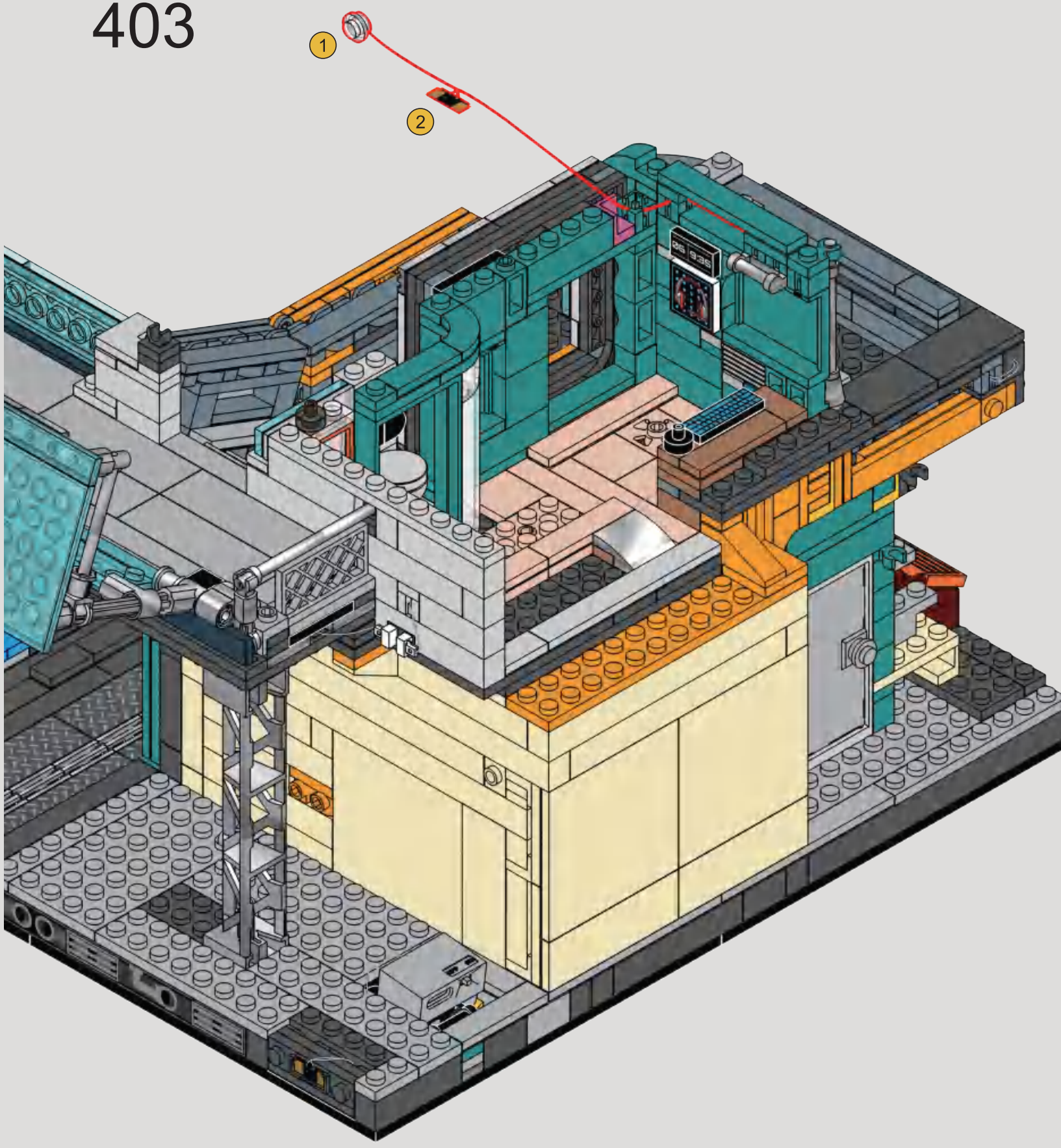

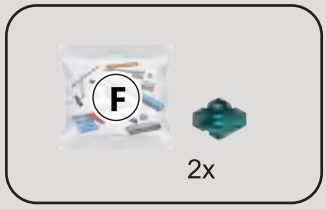

404

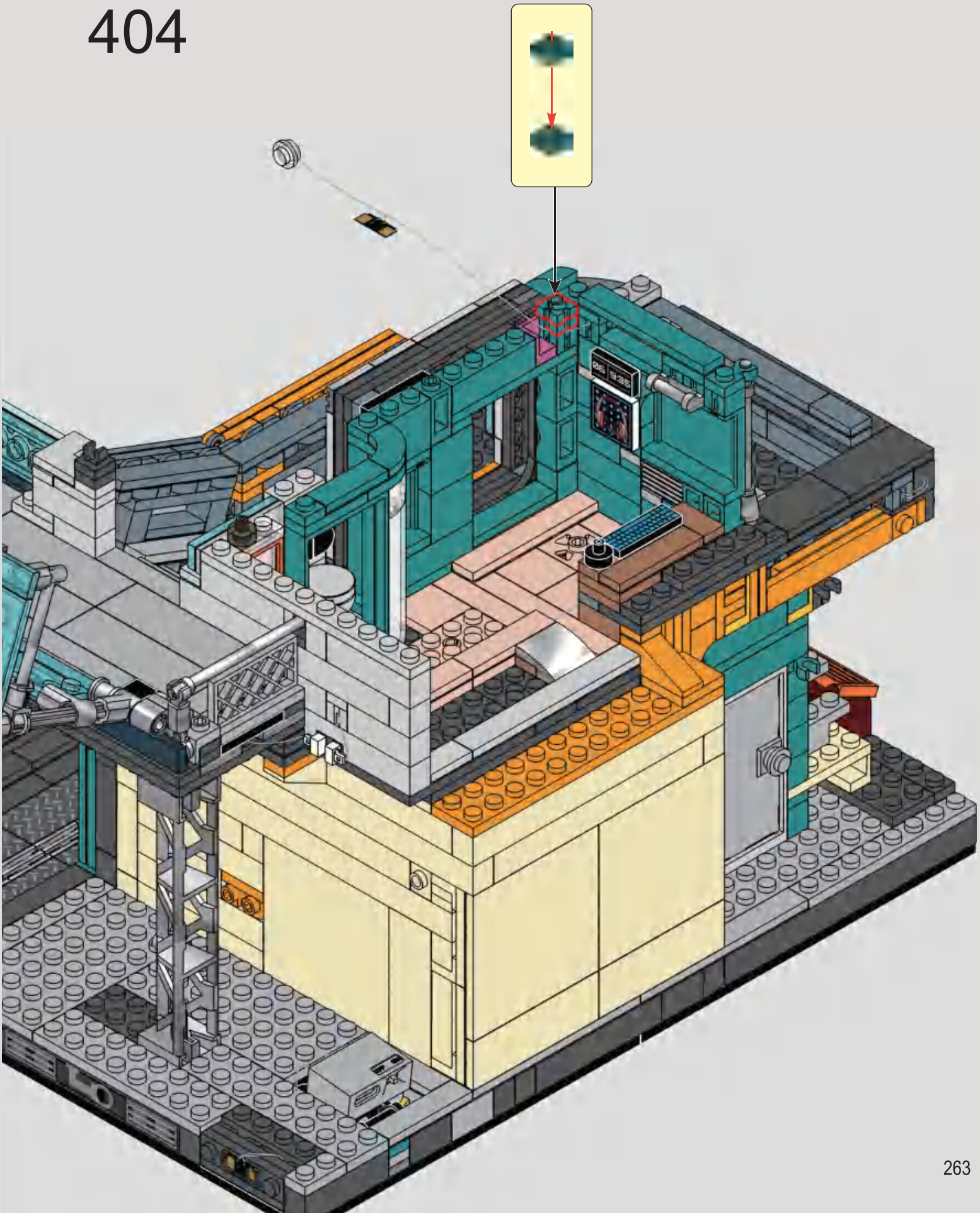

405

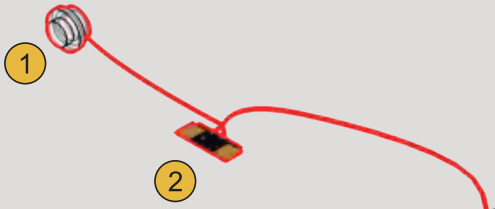

1

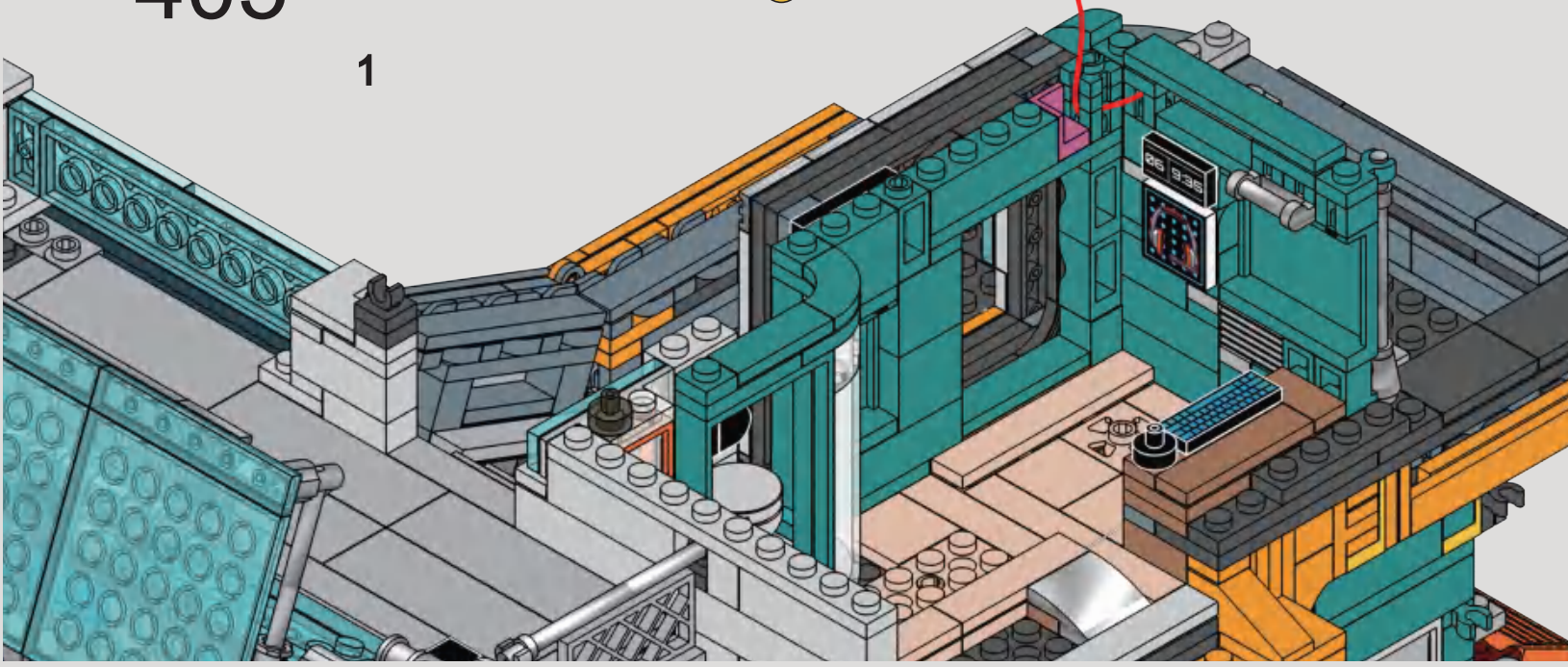

2

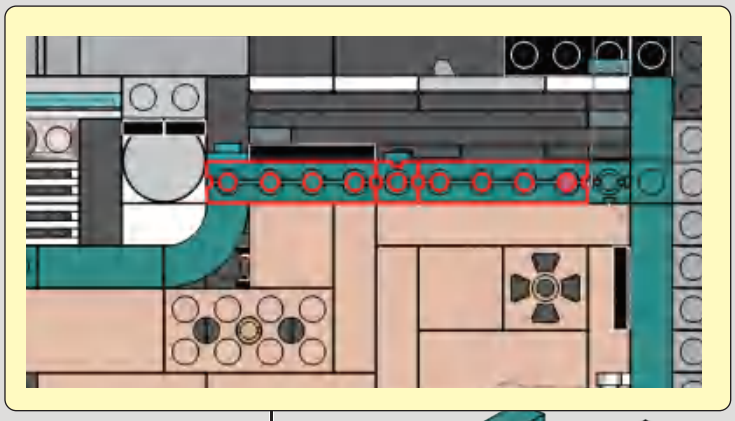

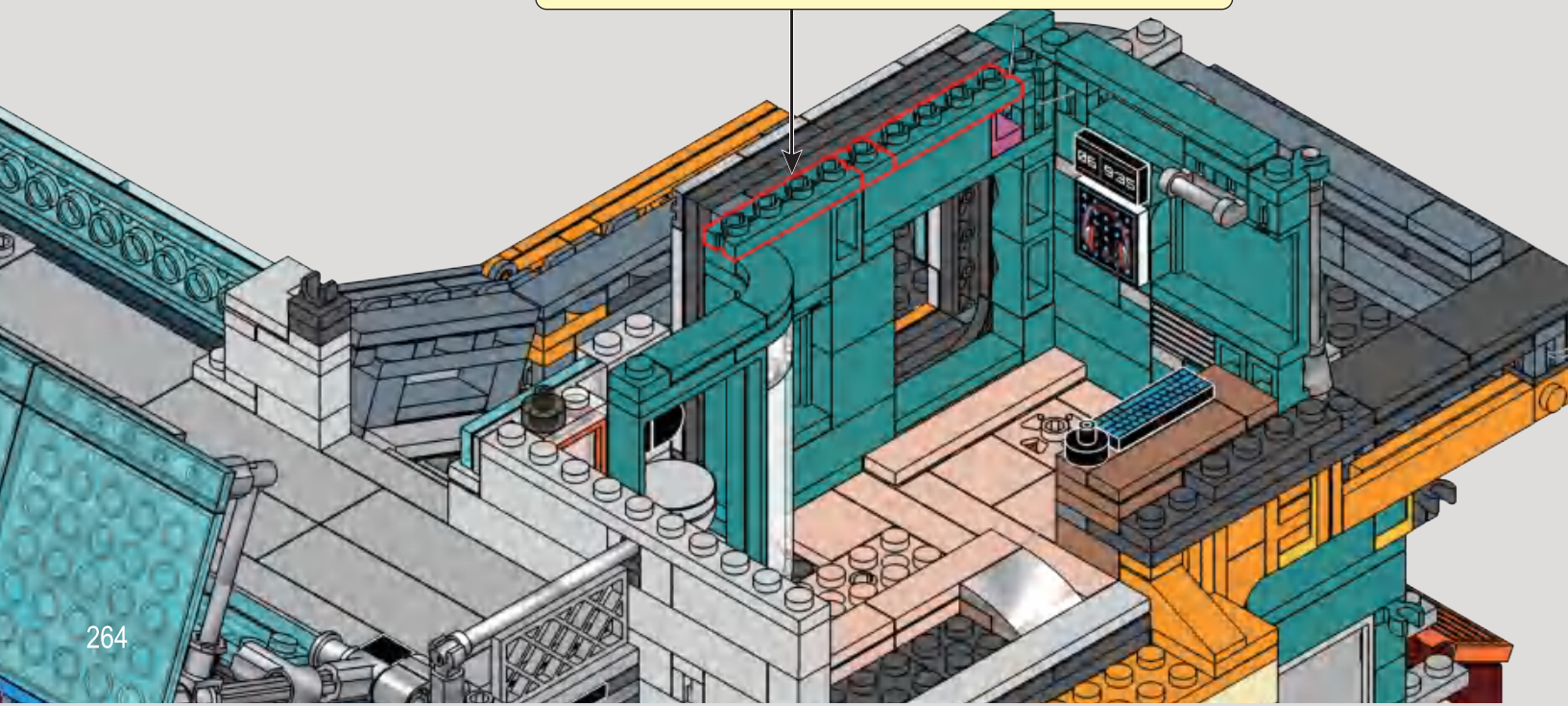

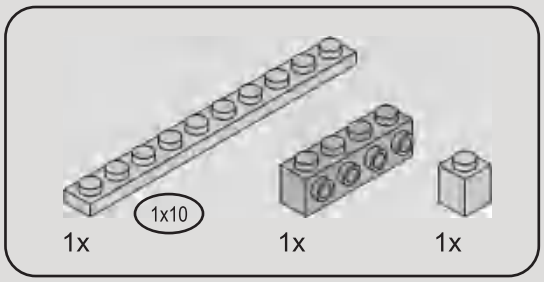

406

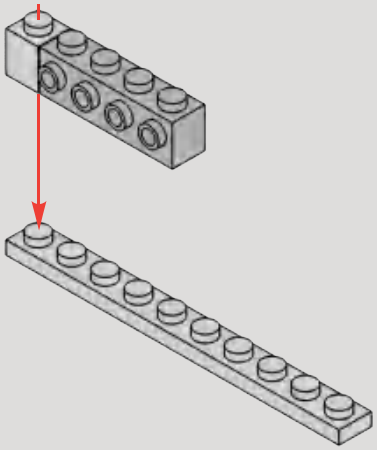

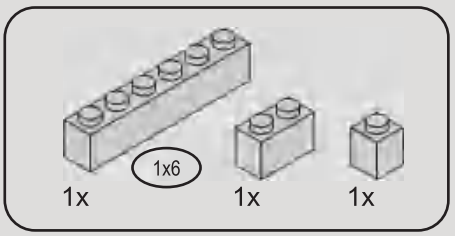

407

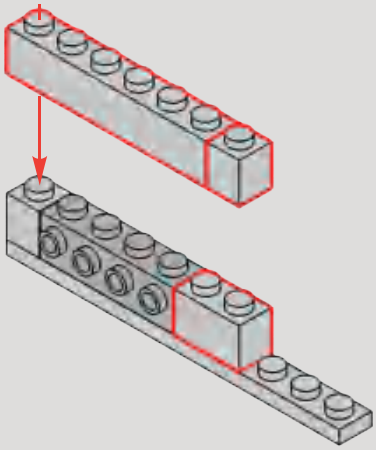

408

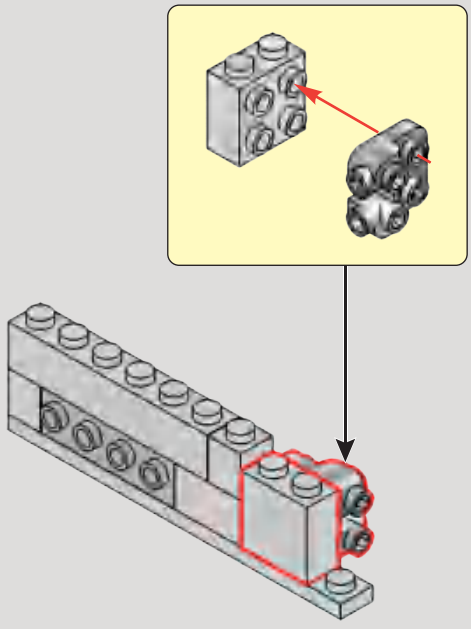

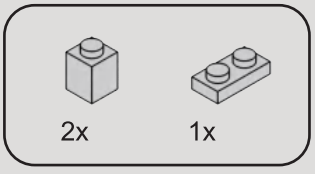

409

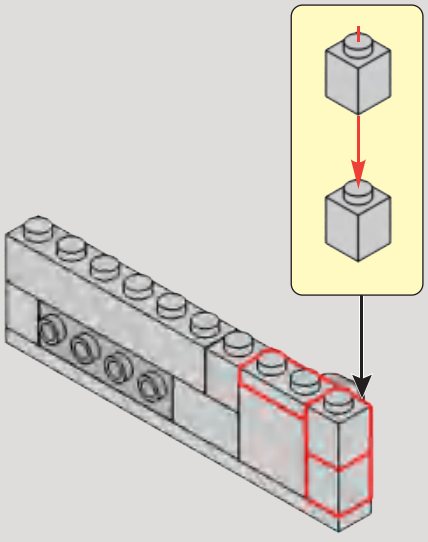

410

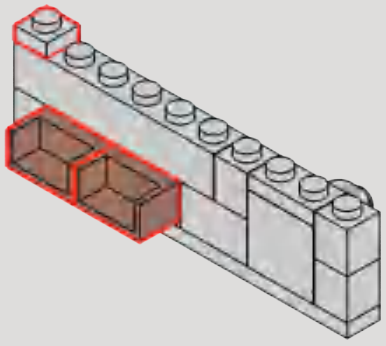

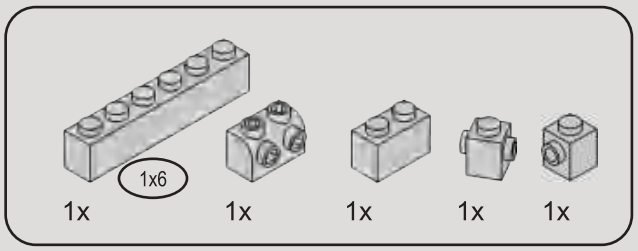

411

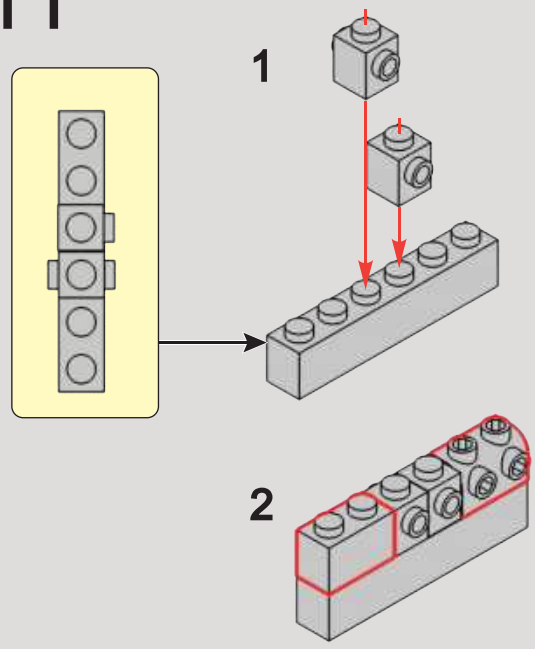

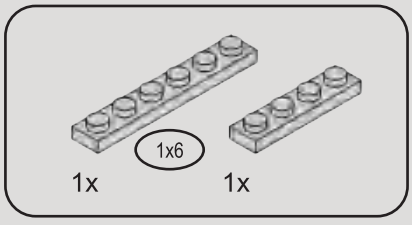

412

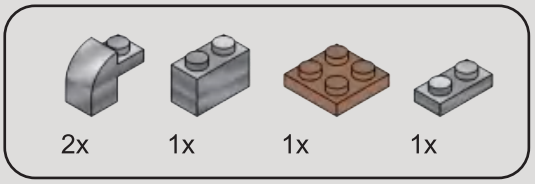

413

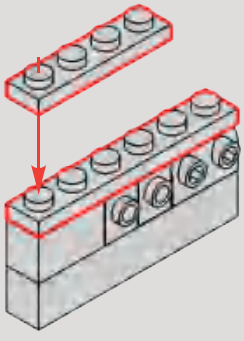

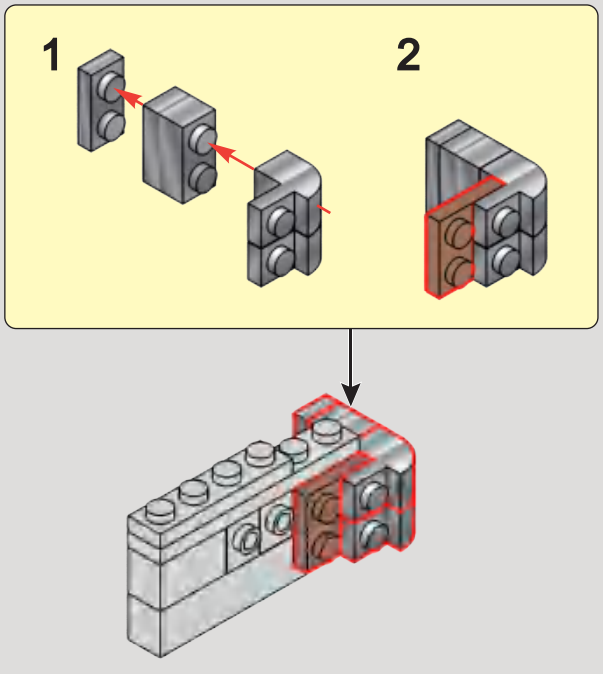

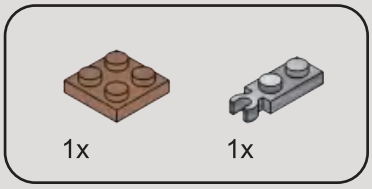

414

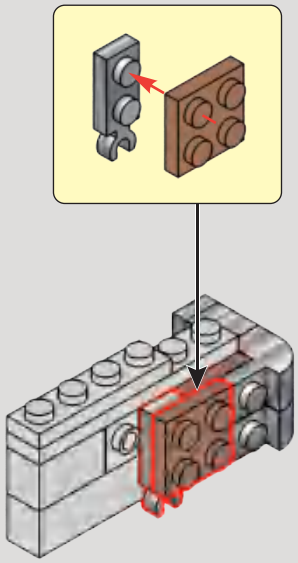

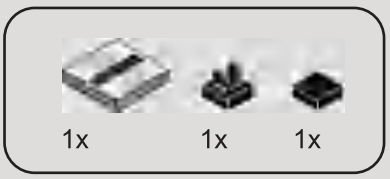

415

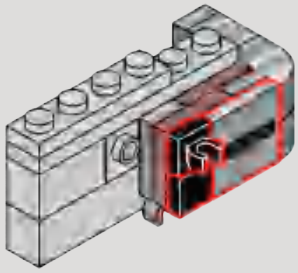

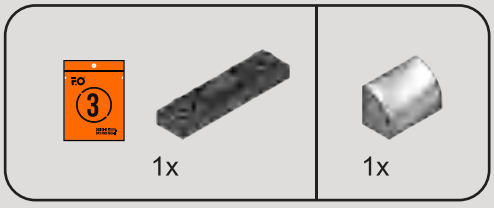

416

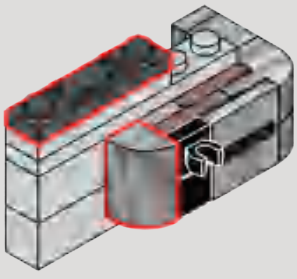

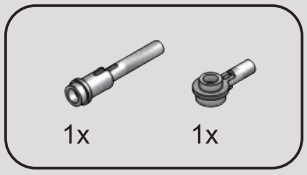

417

1

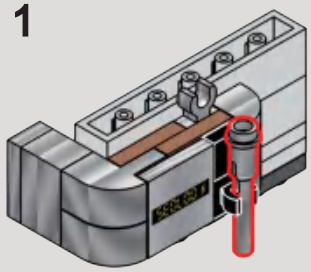

2

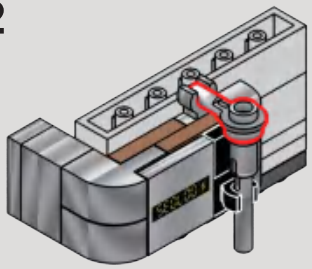

418

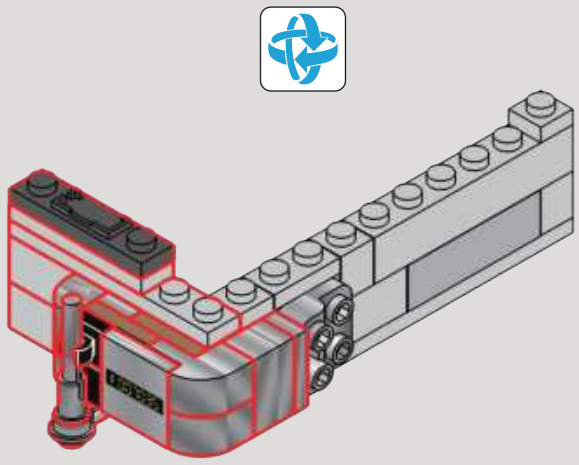

1x

419

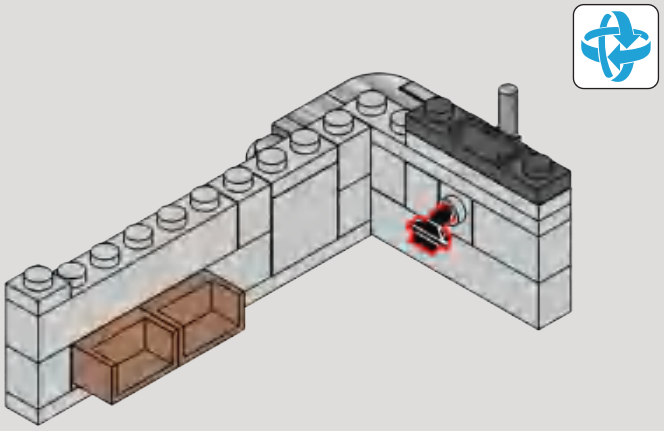

420

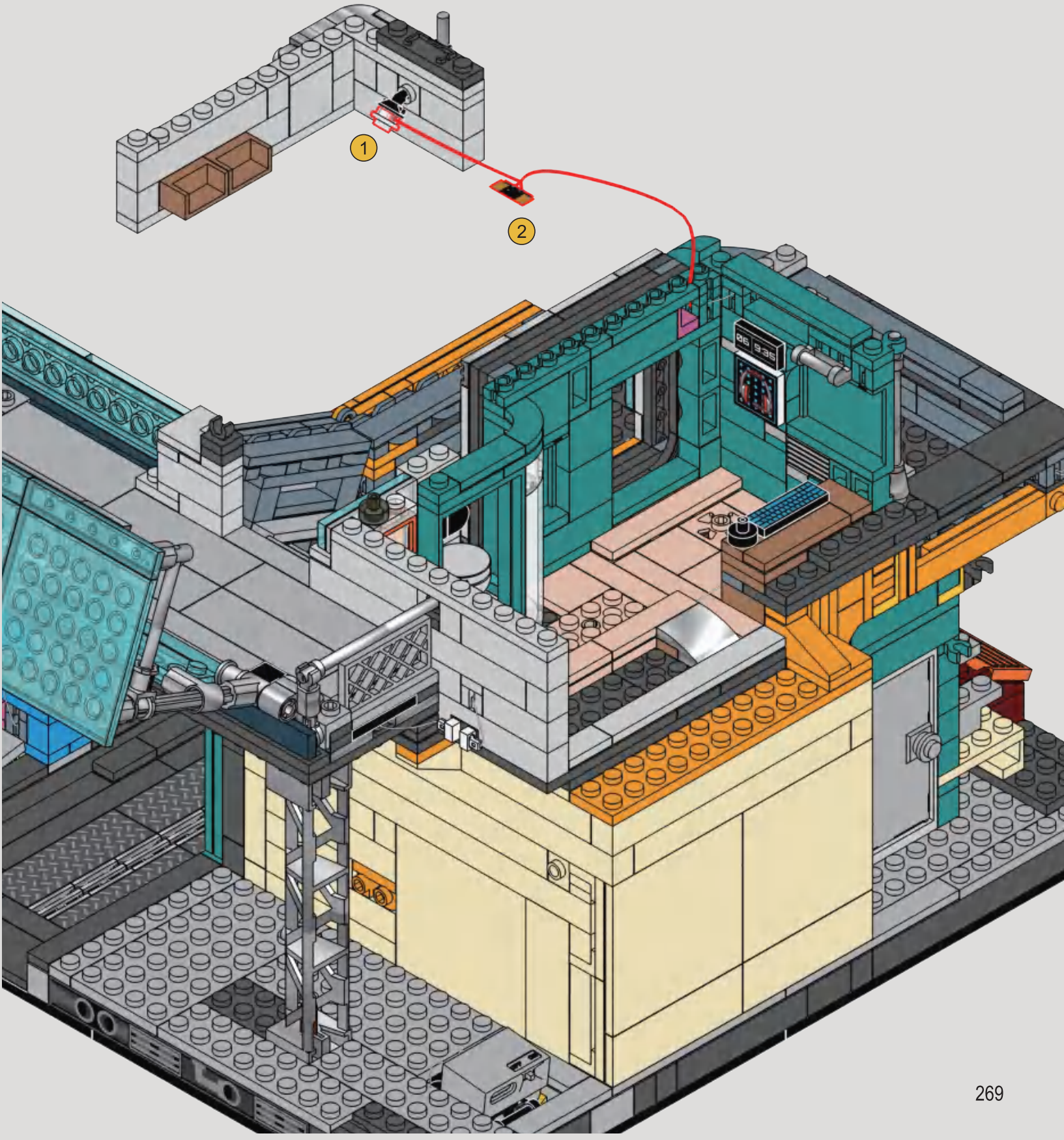

421

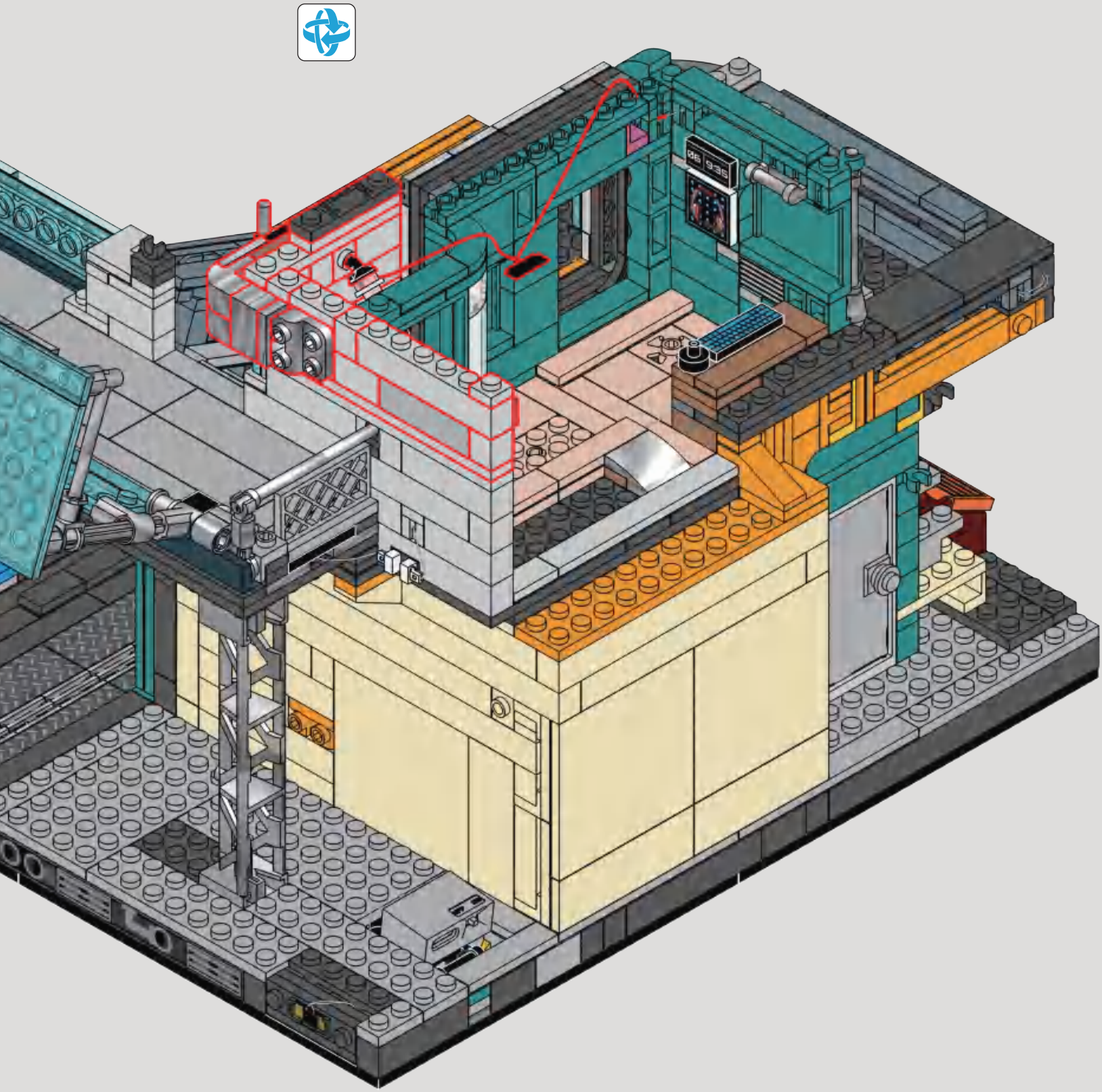

422

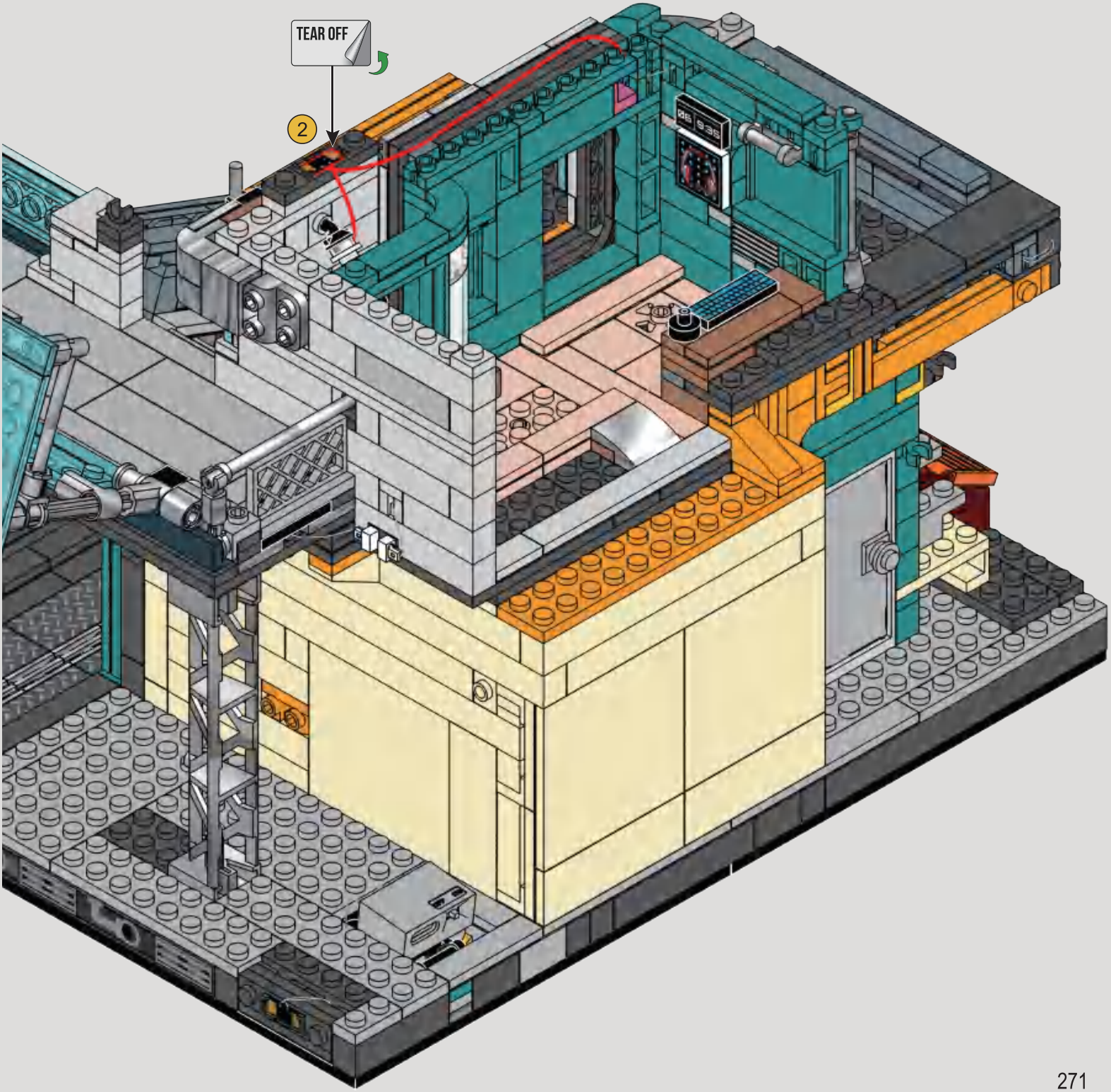

1x

423

1

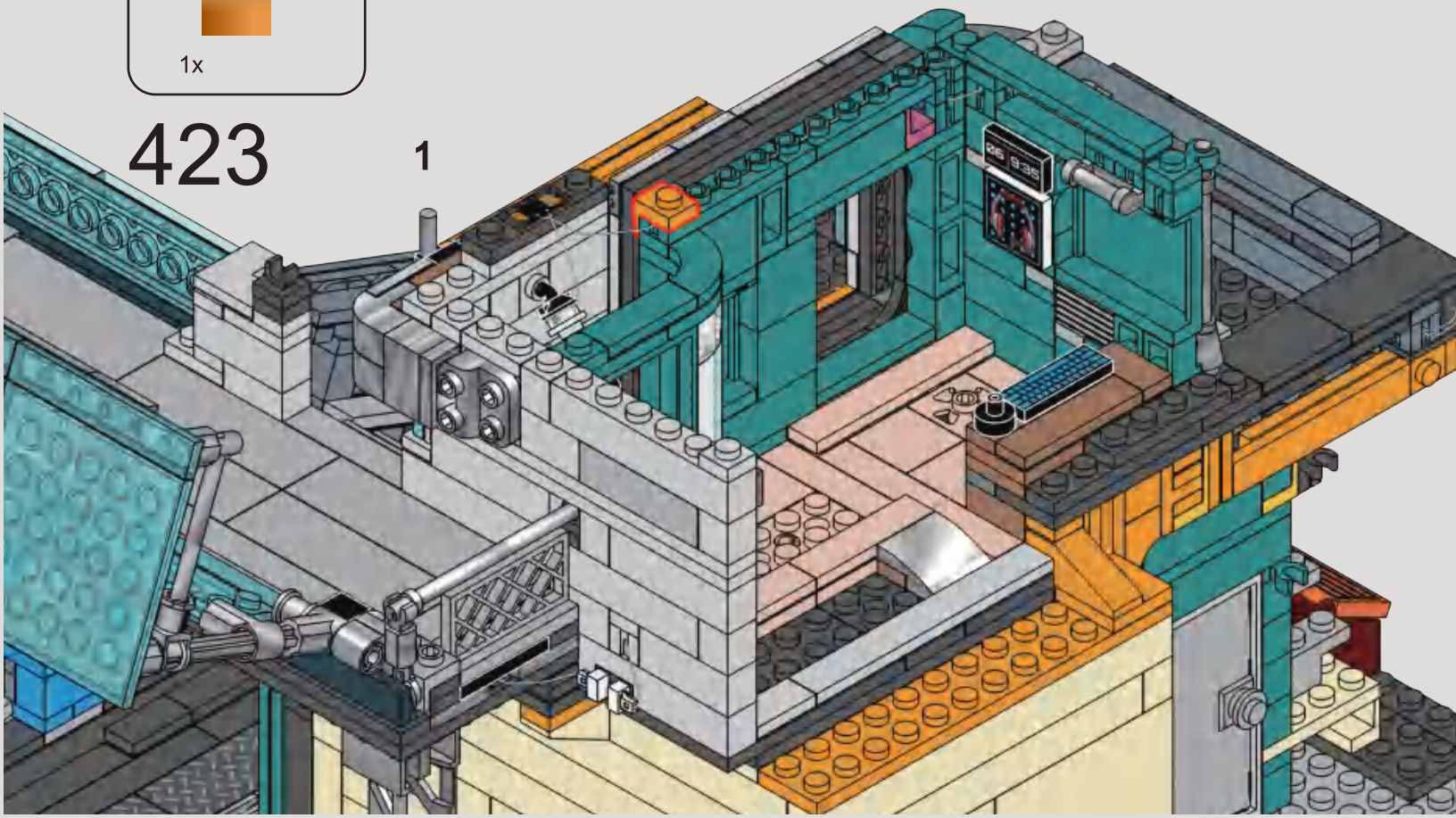

2

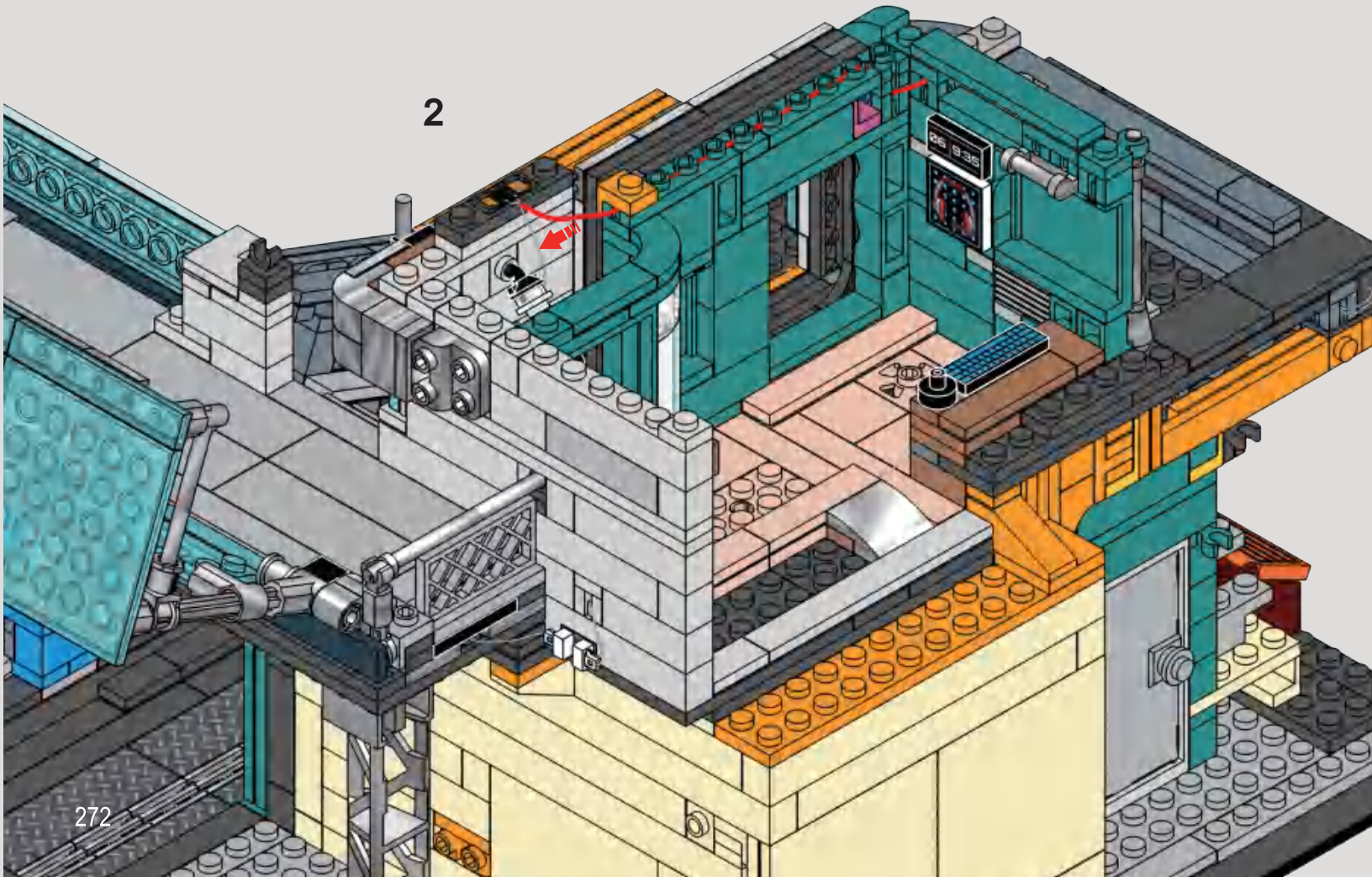

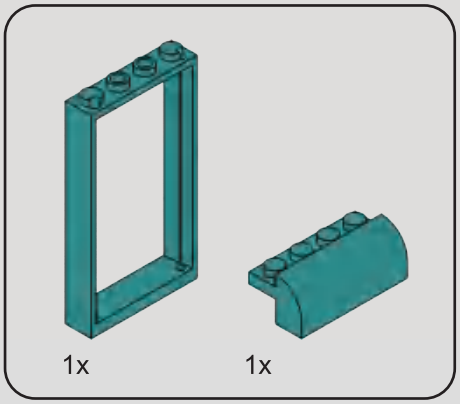

424

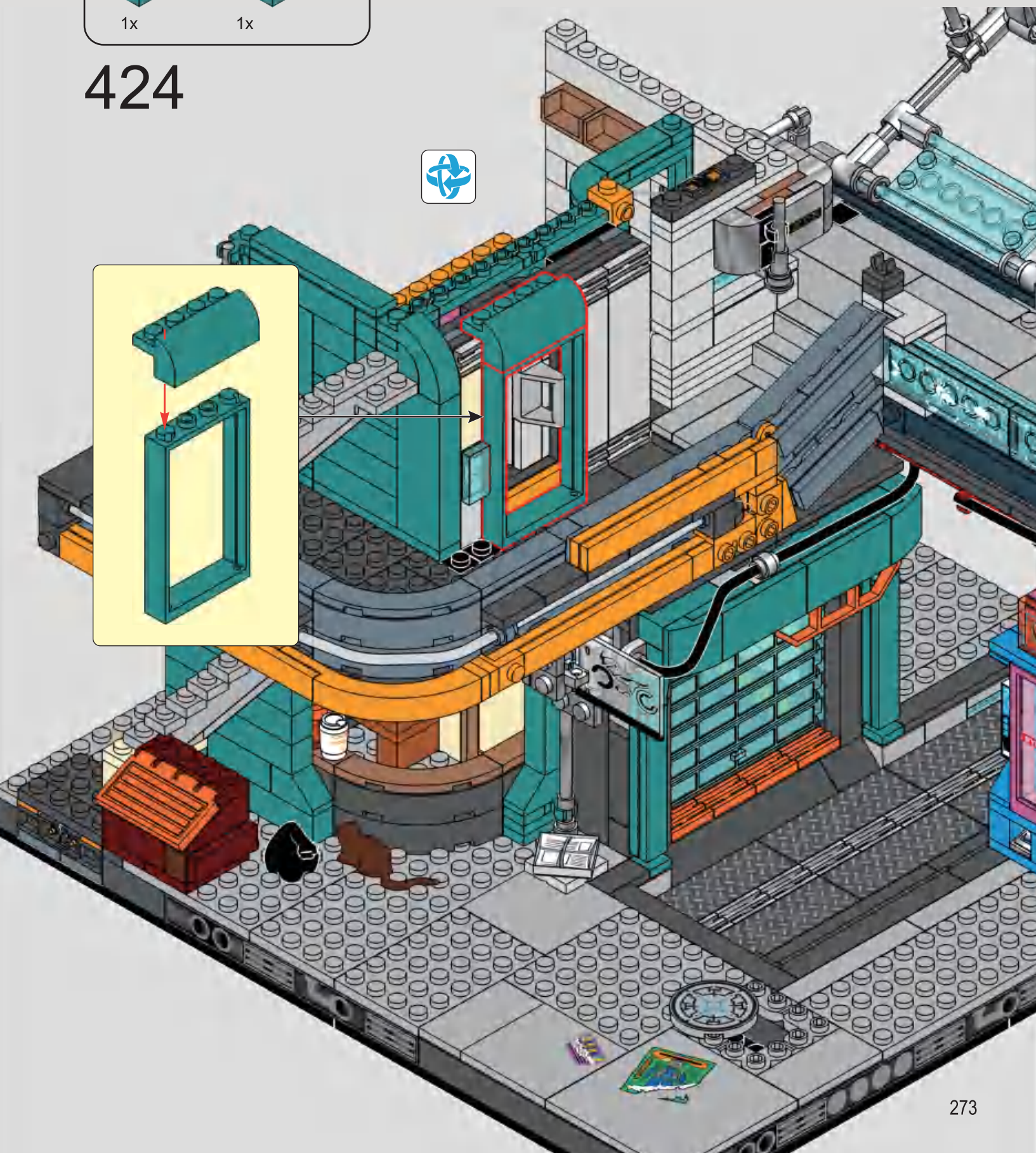

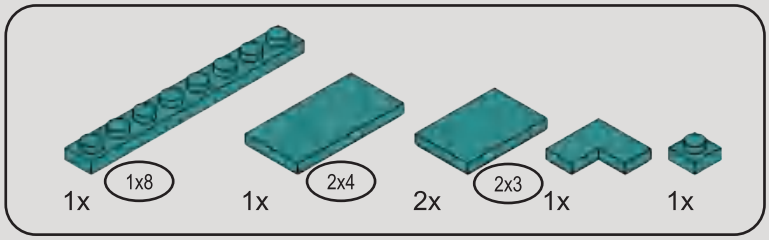

425

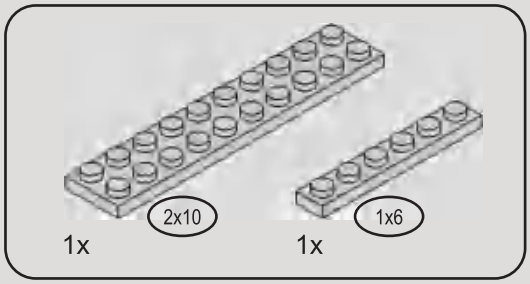

426

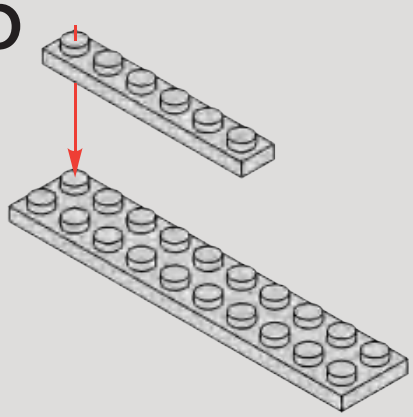

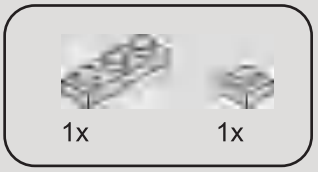

427

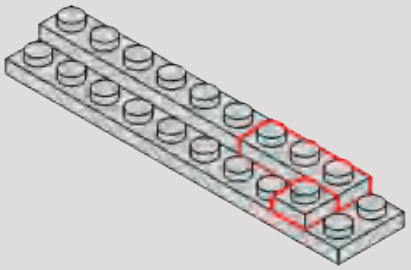

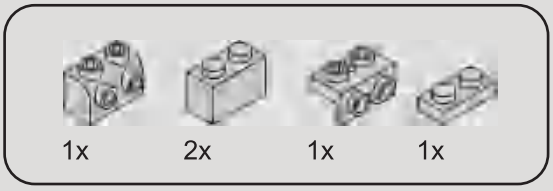

428

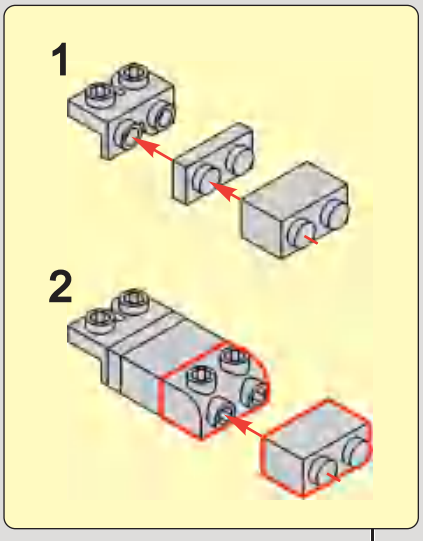

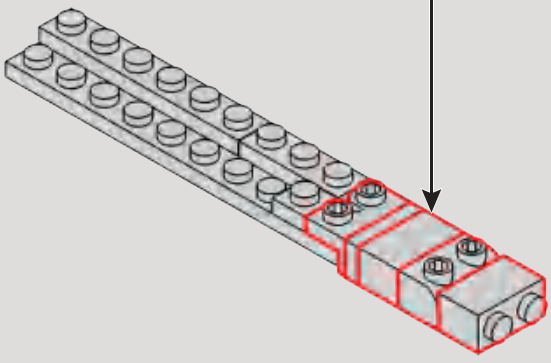

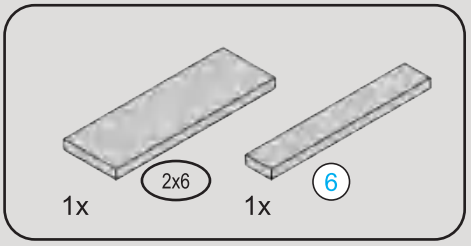

429

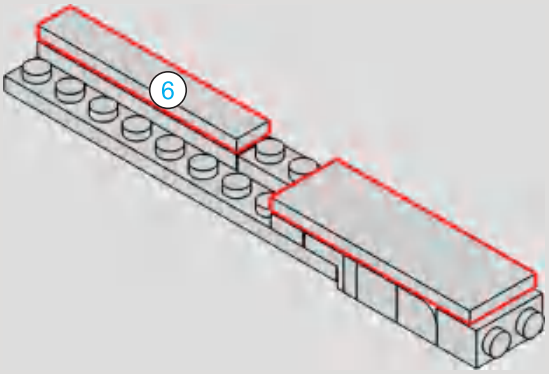

430

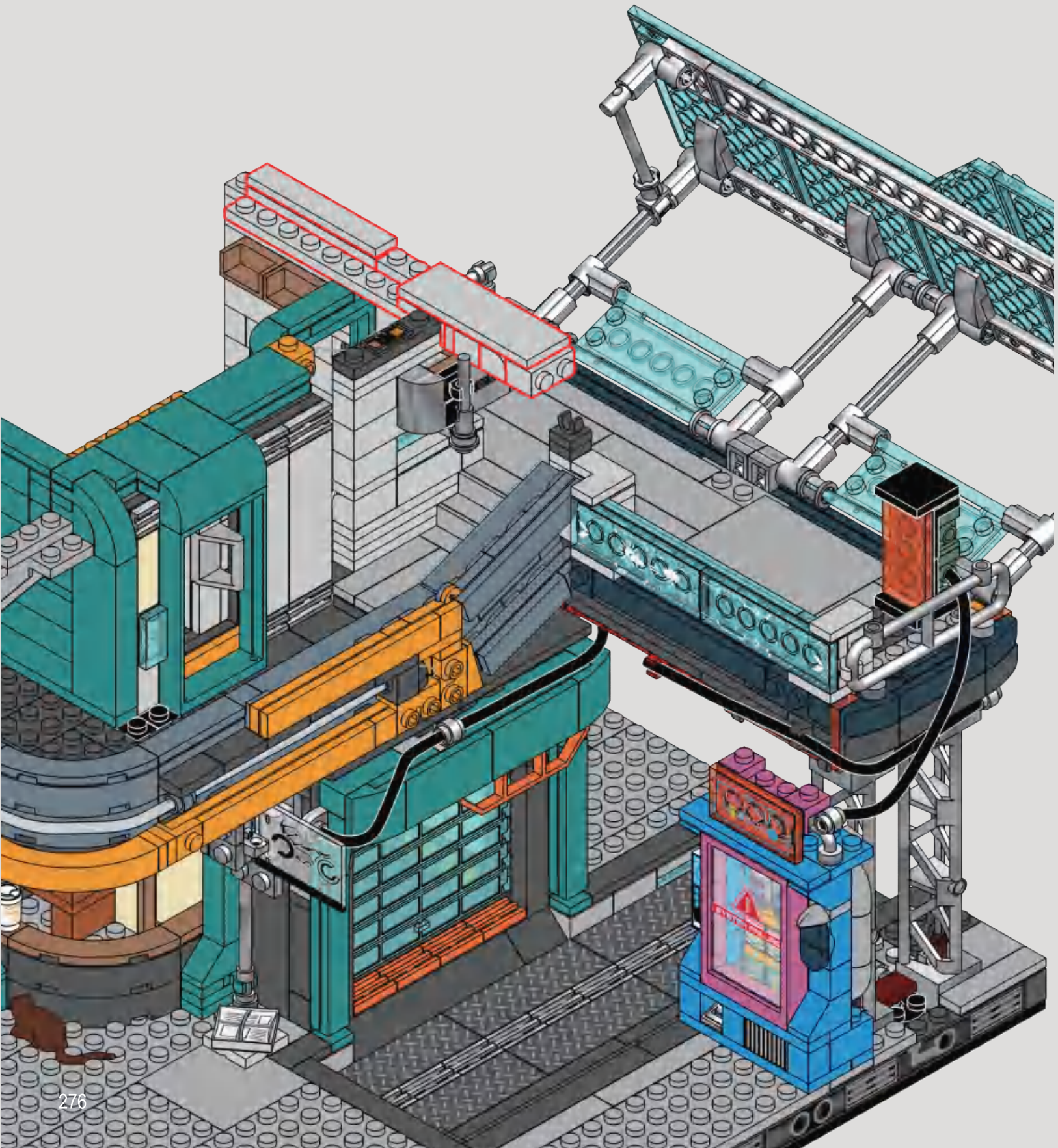

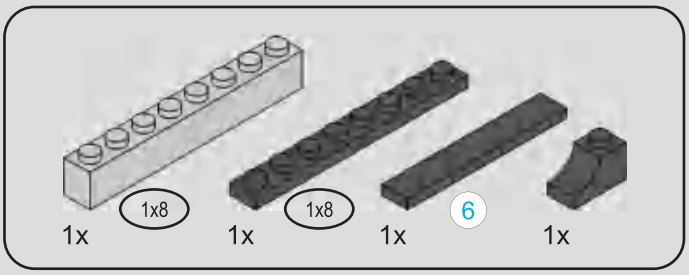

6 1:1

431

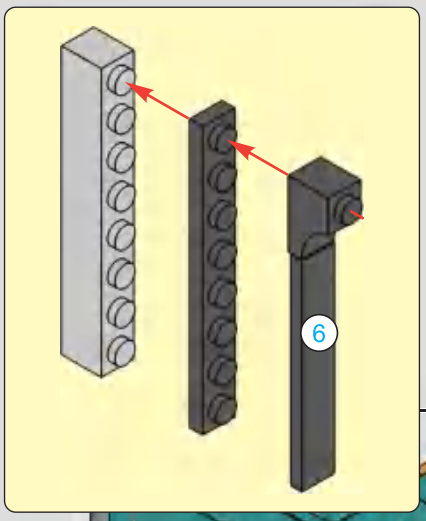

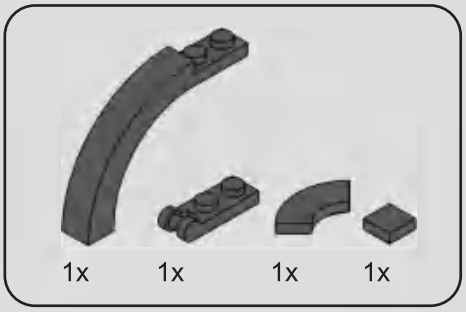

432

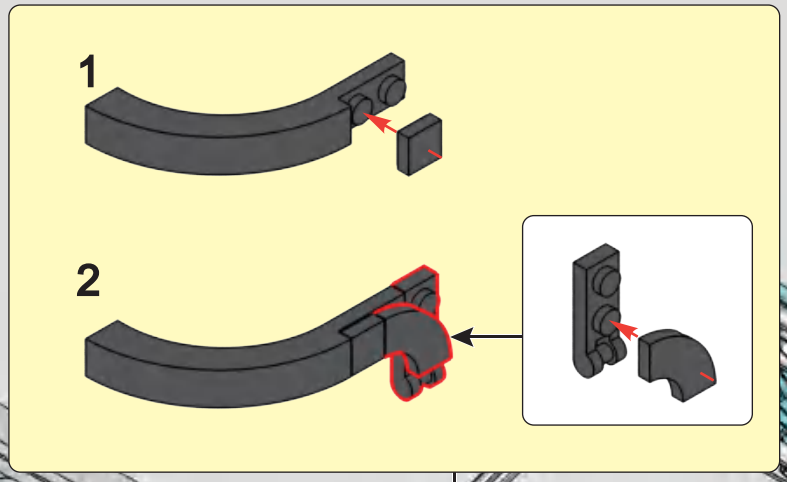

1

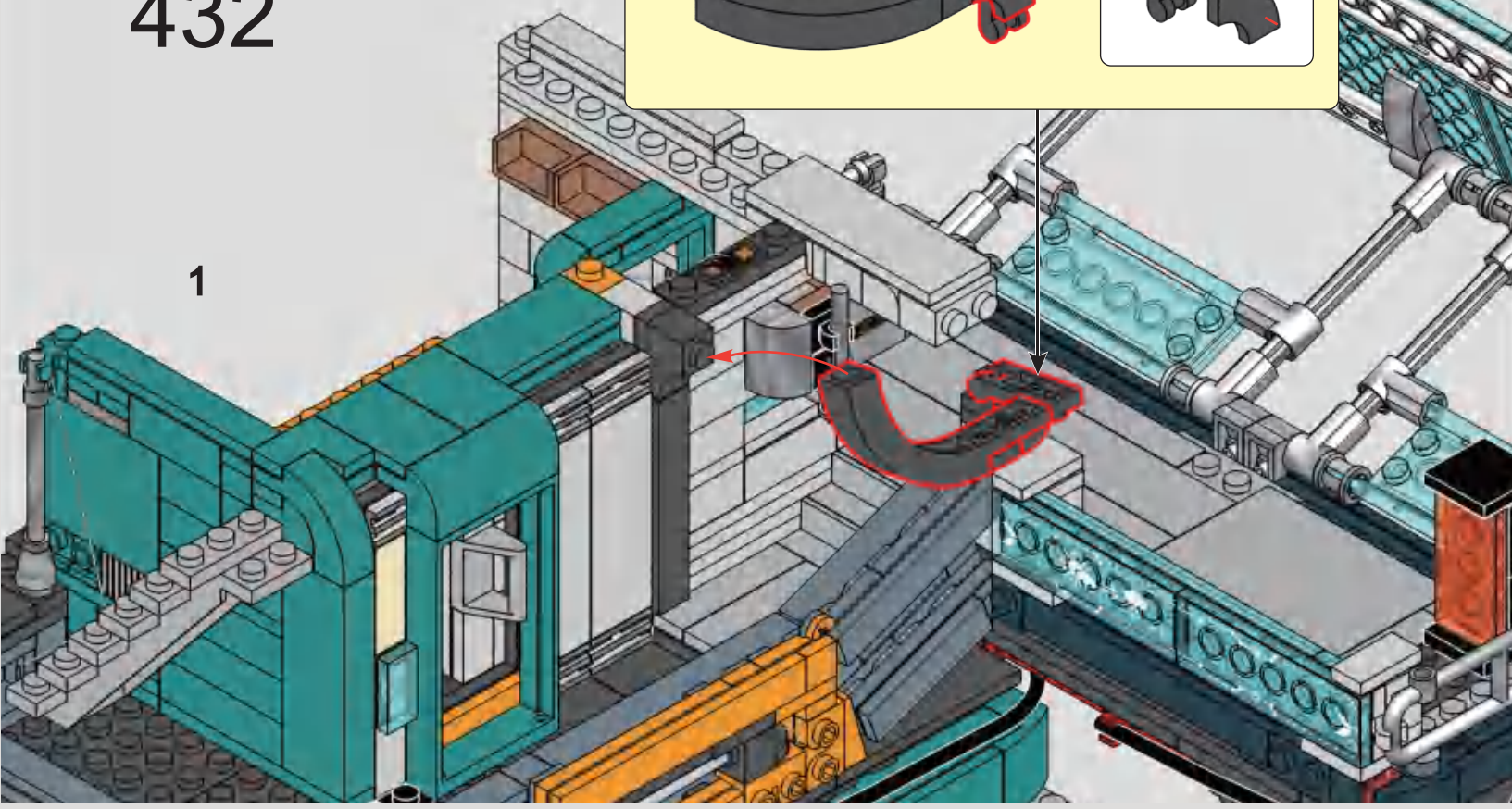

2

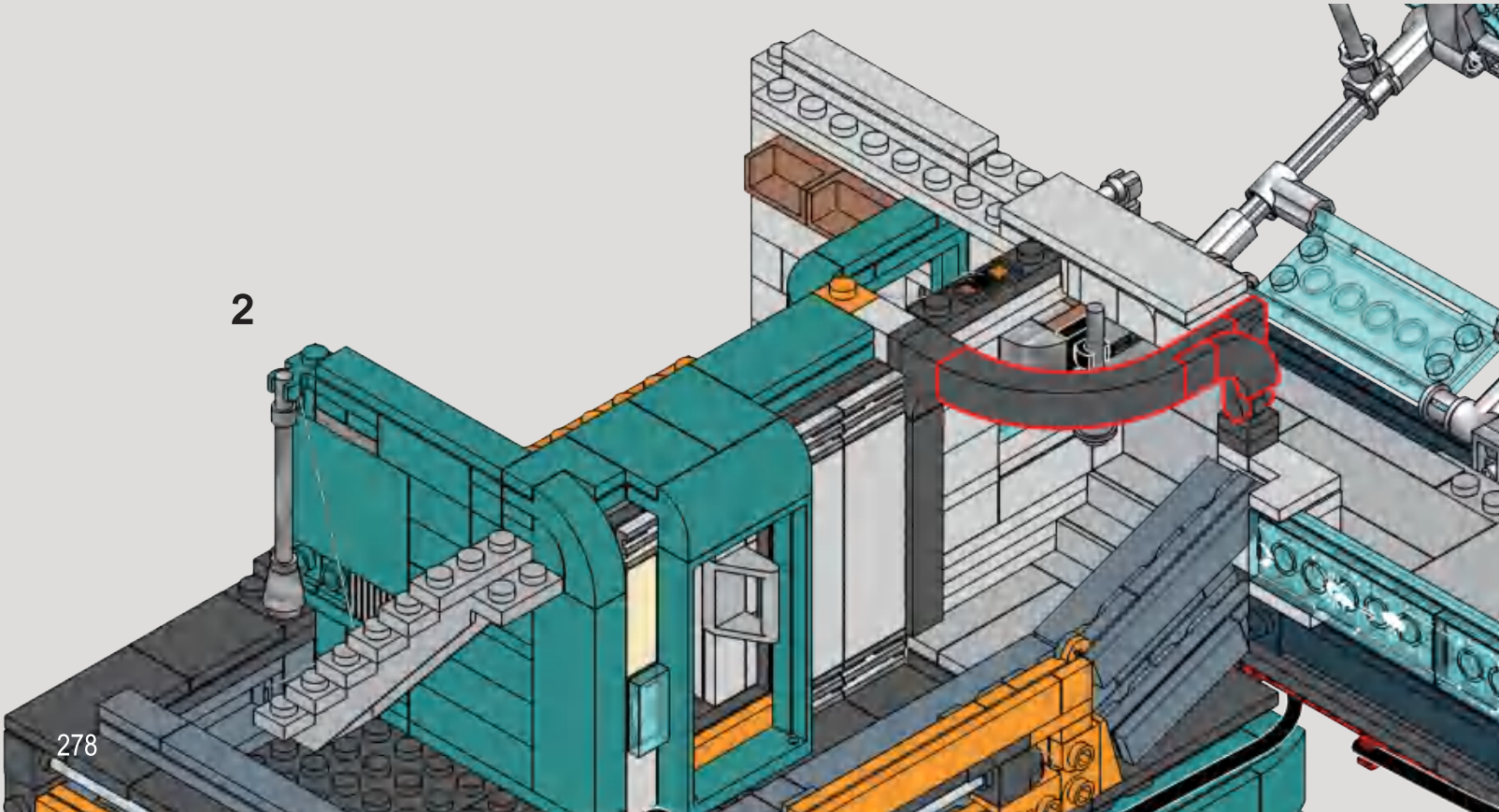

433

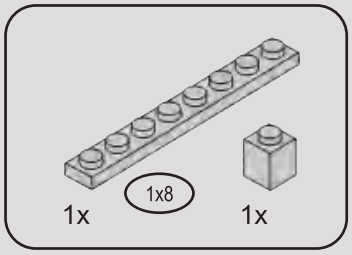

434

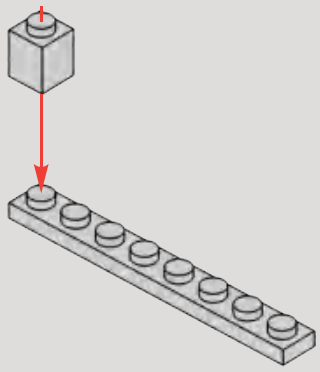

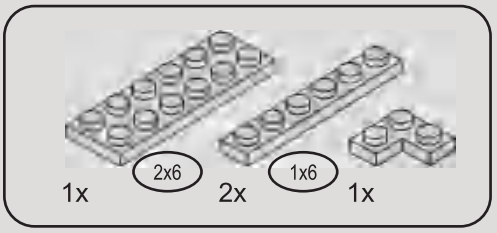

435

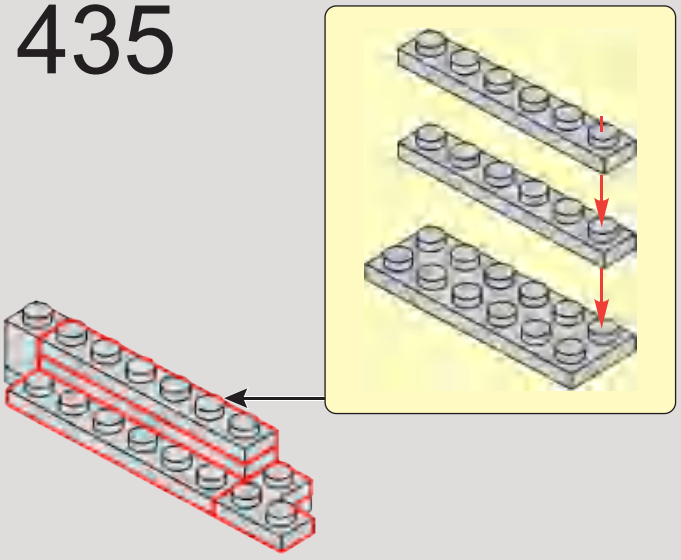

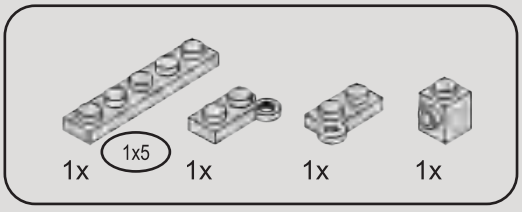

436

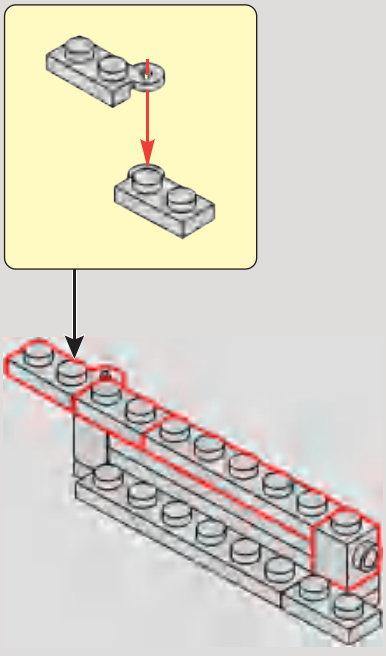

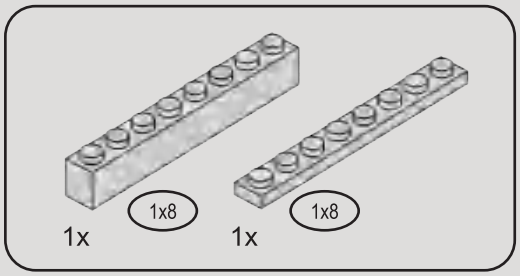

437

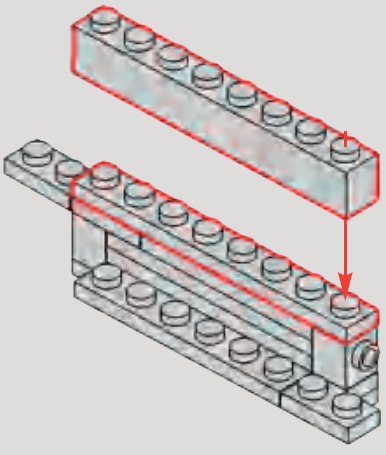

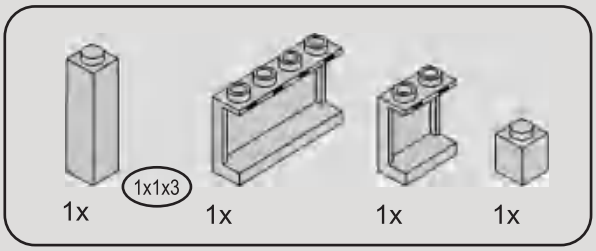

438

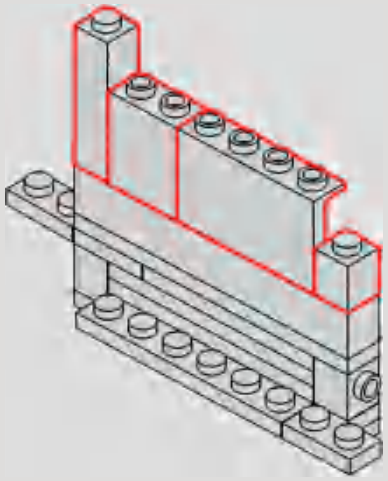

439

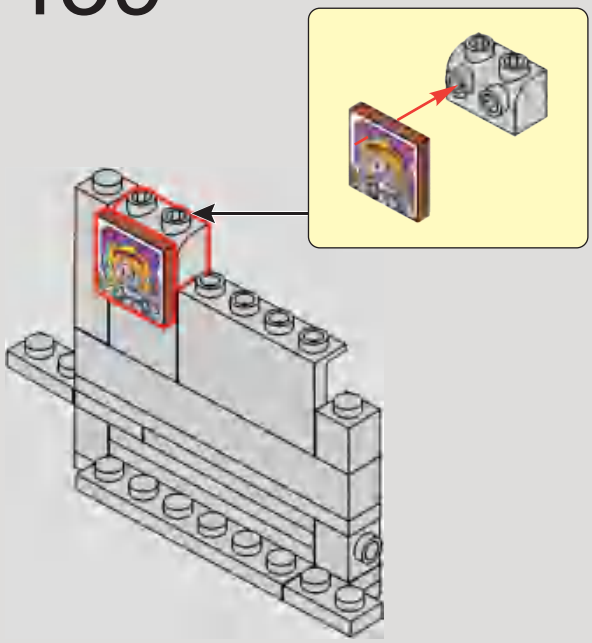

440

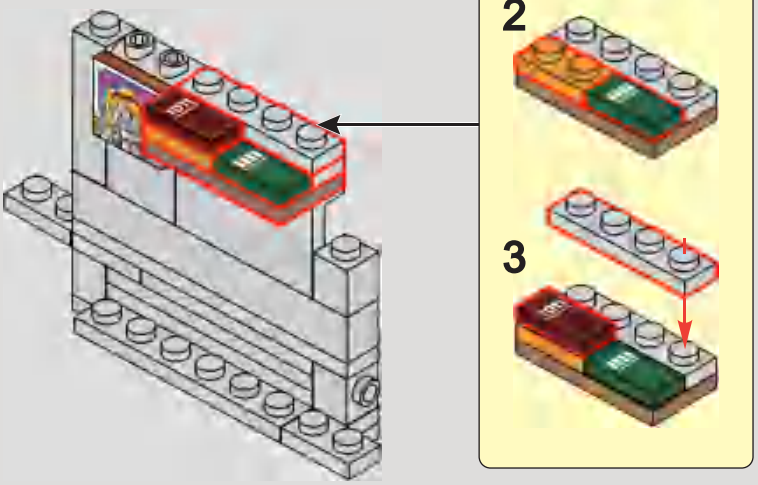

441

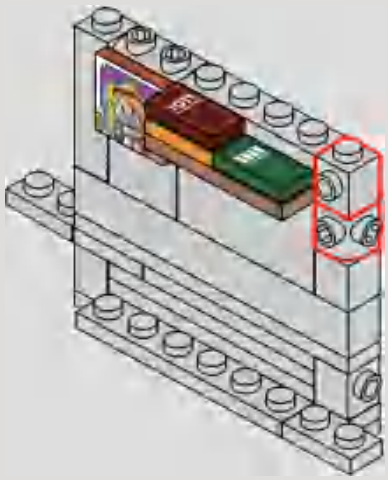

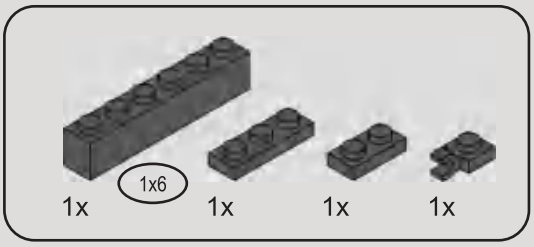

442

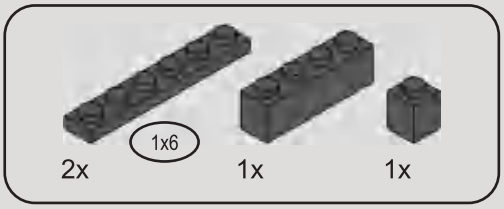

443

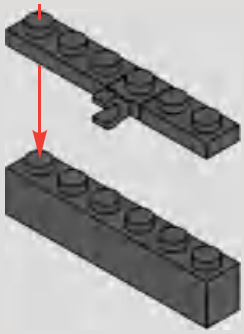

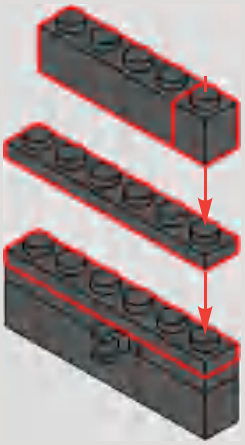

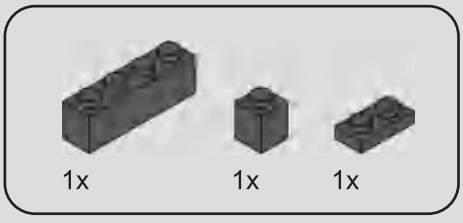

444

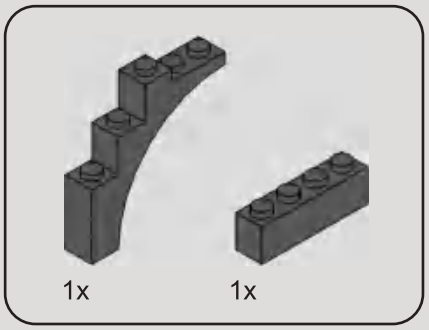

445

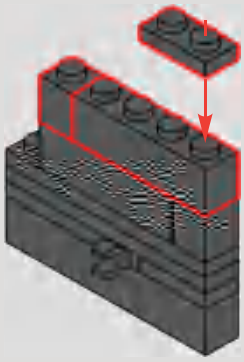

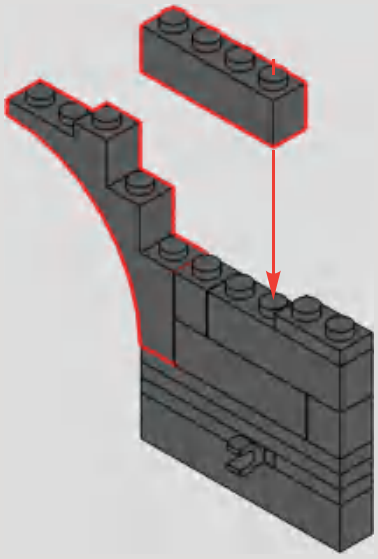

446

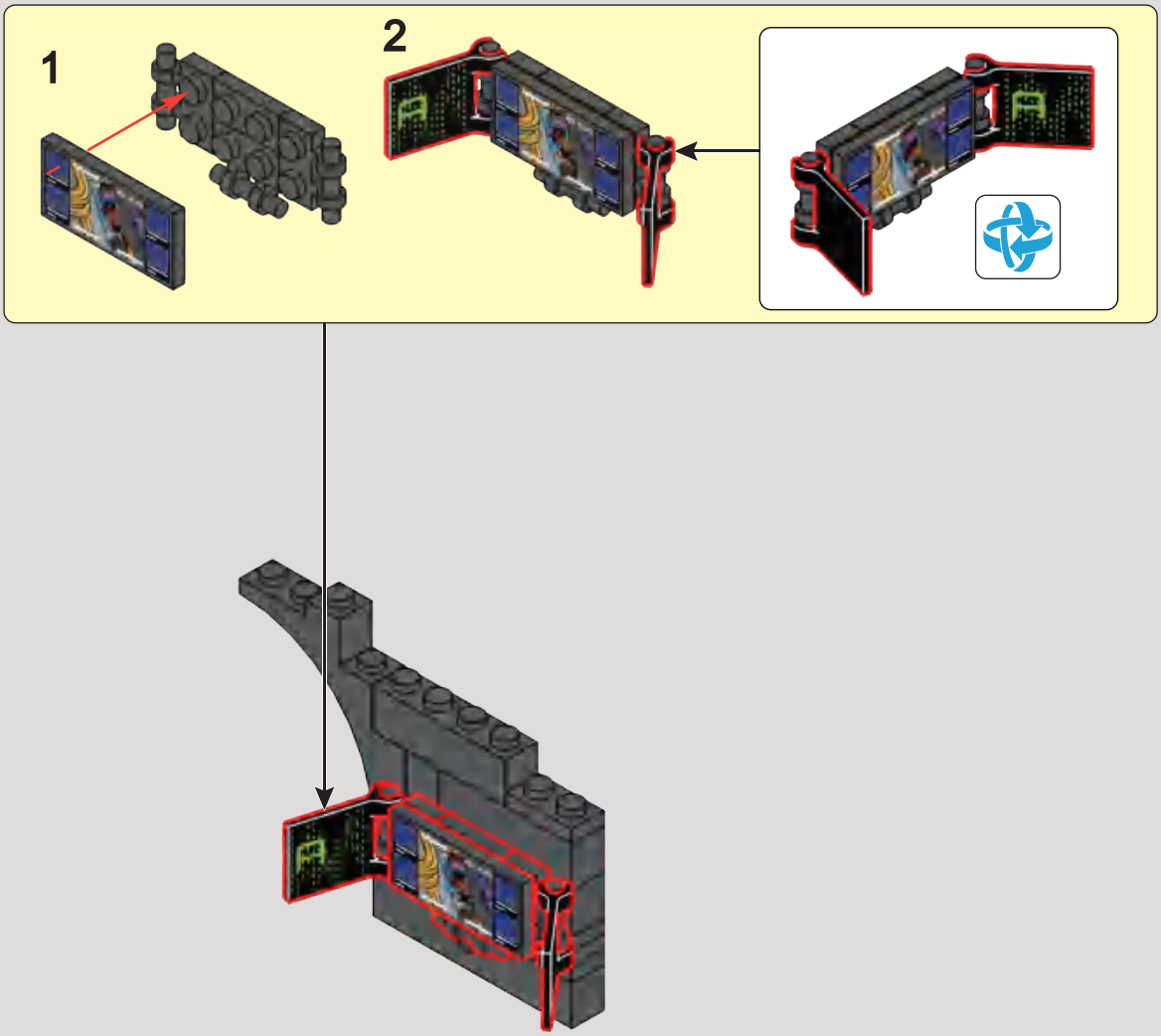

447

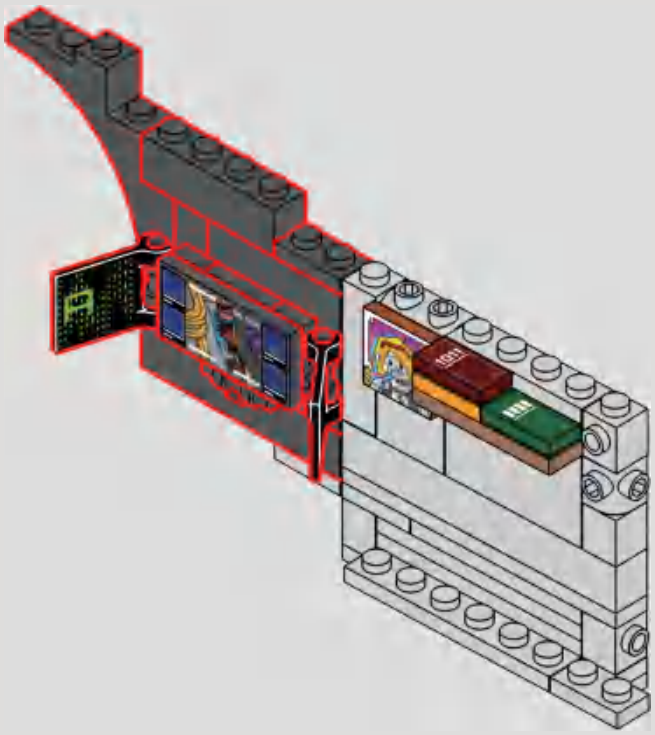

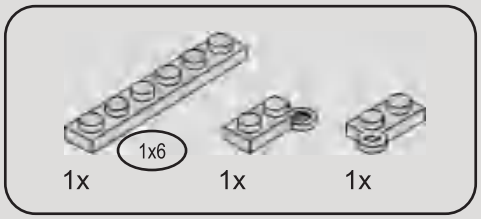

448

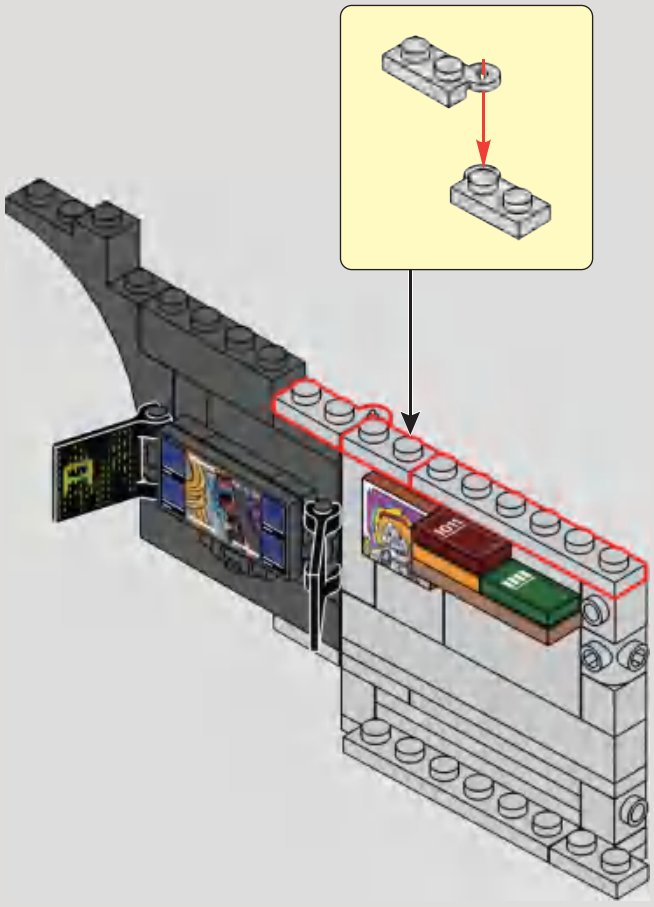

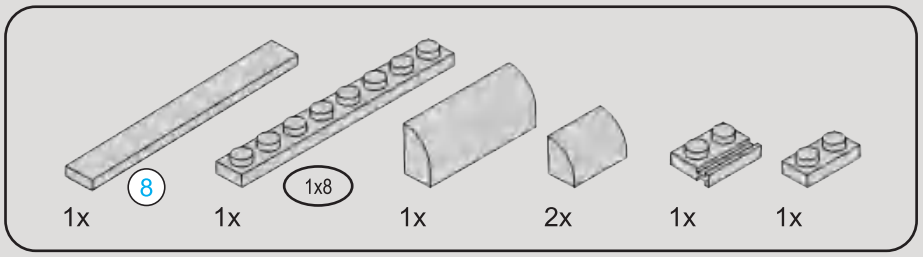

449

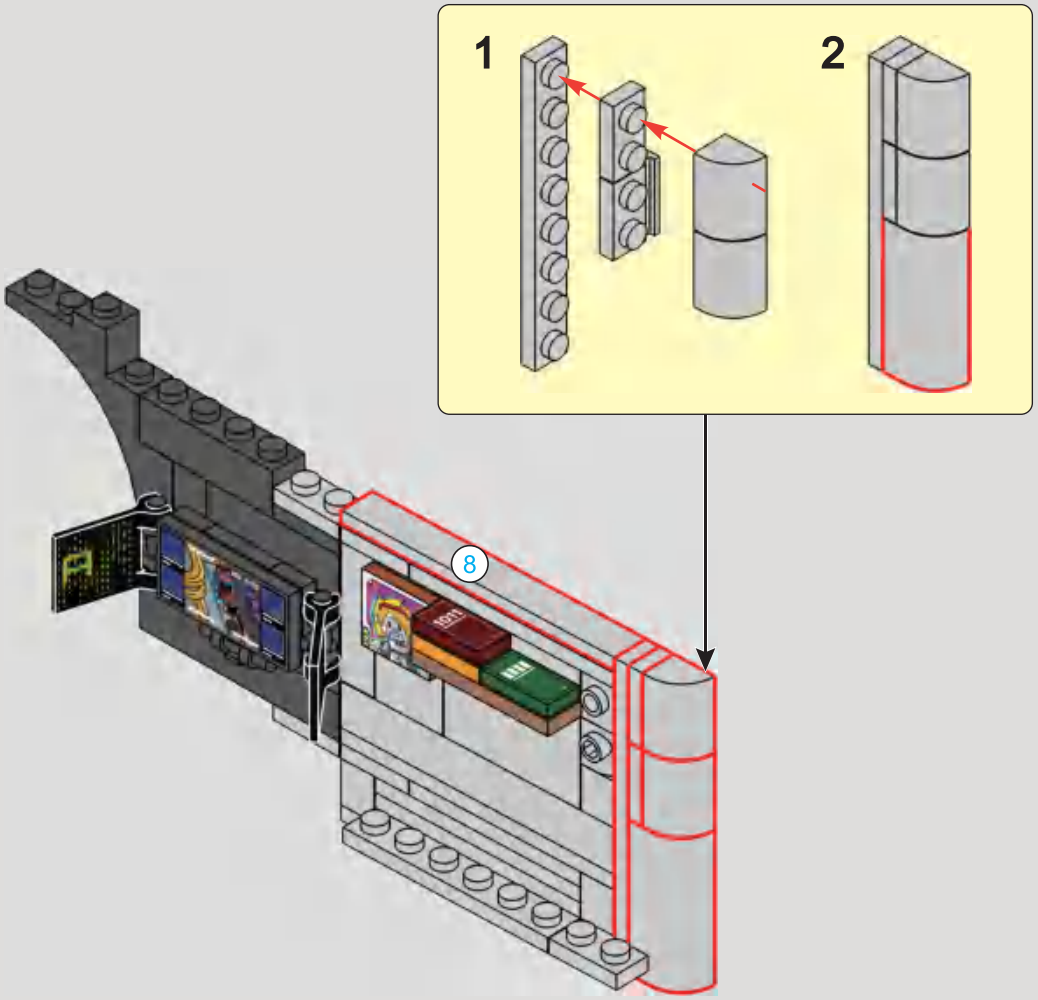

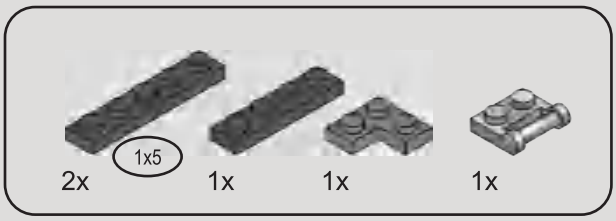

450

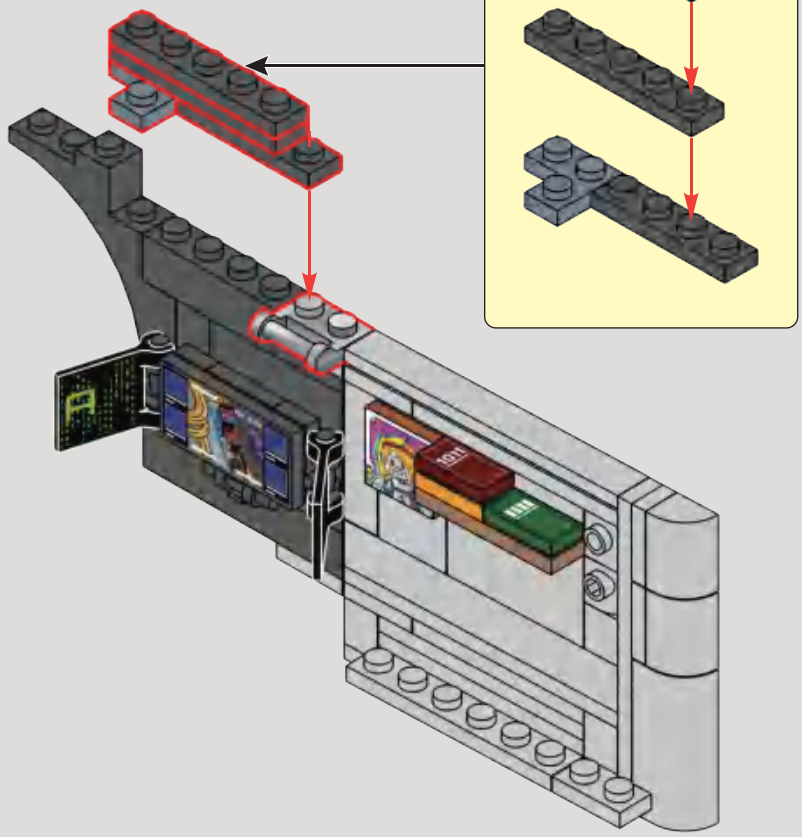

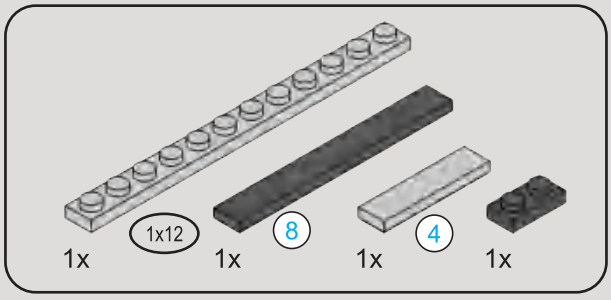

451

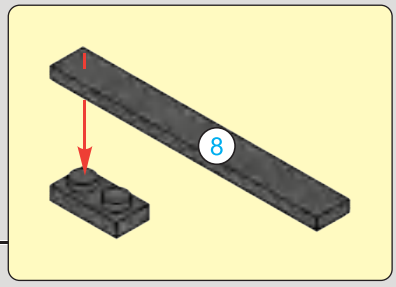

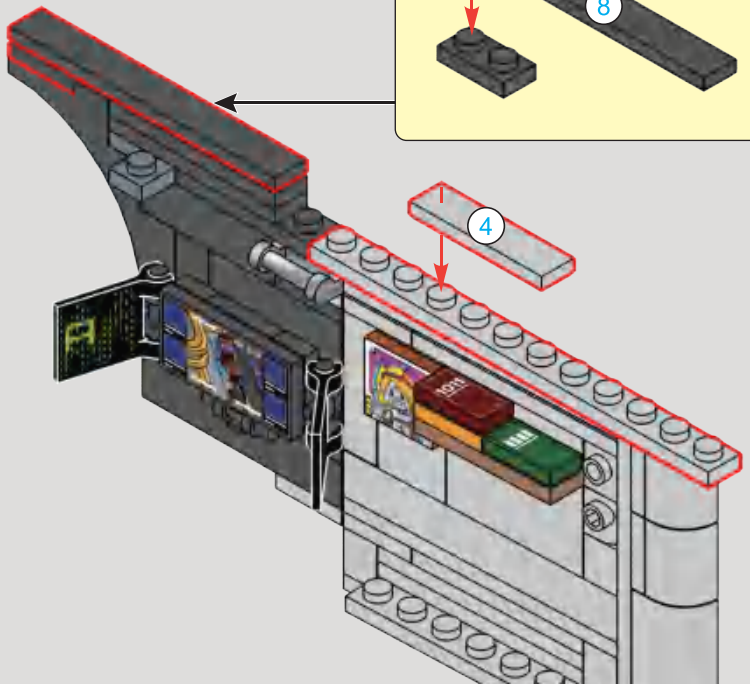

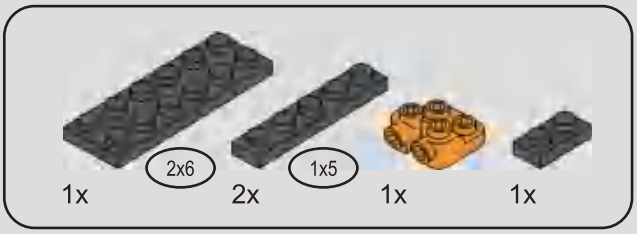

452

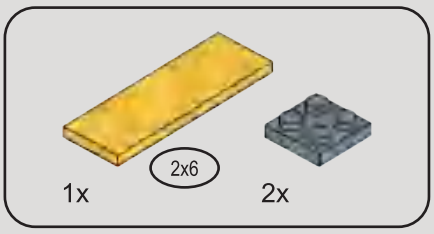

453

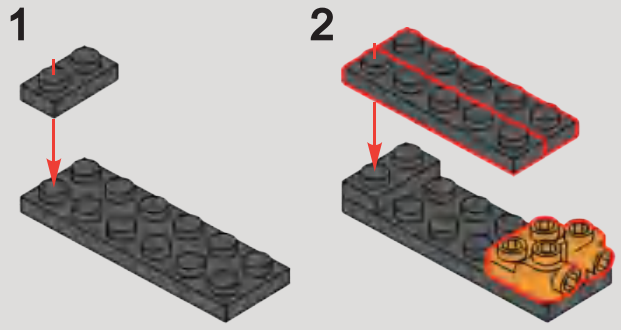

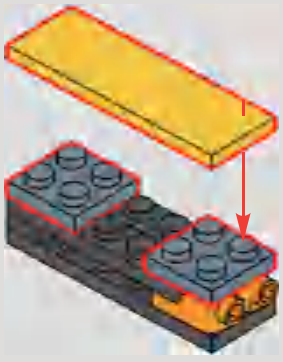

454

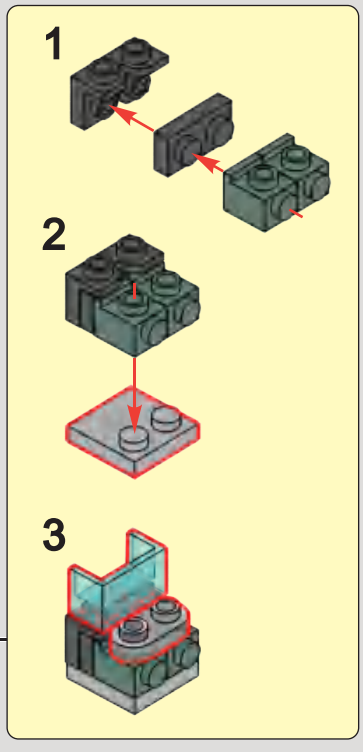

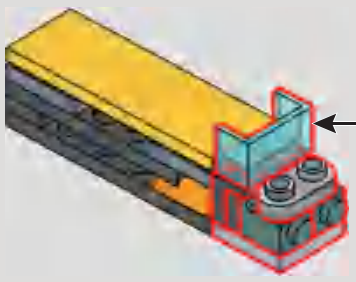

455

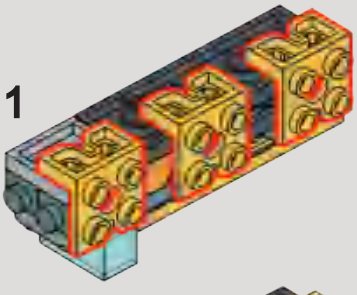

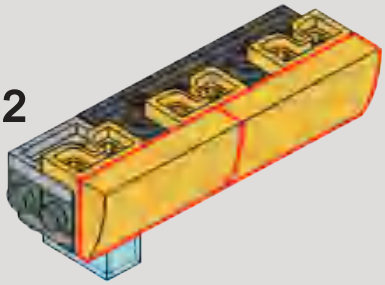

456

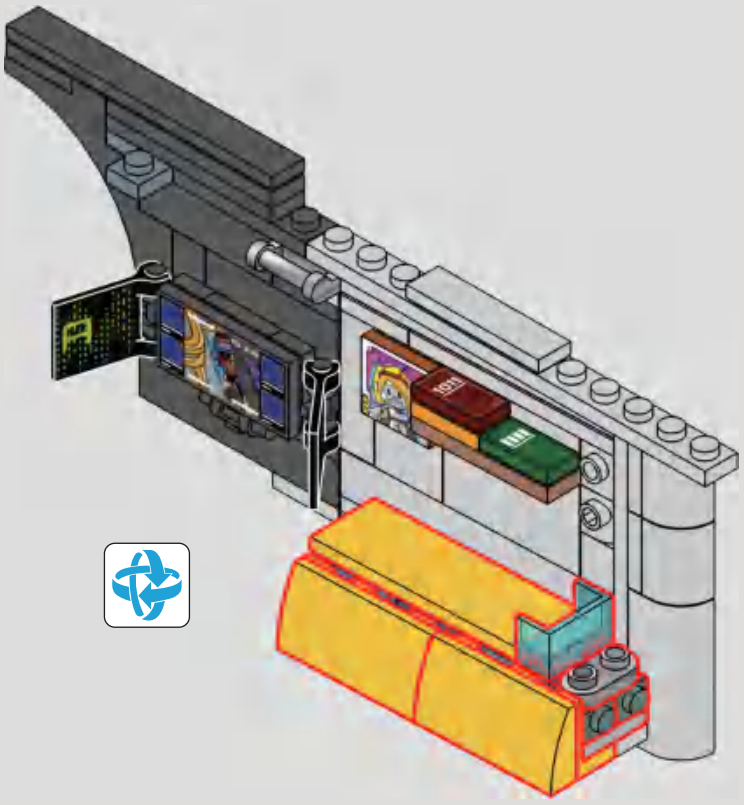

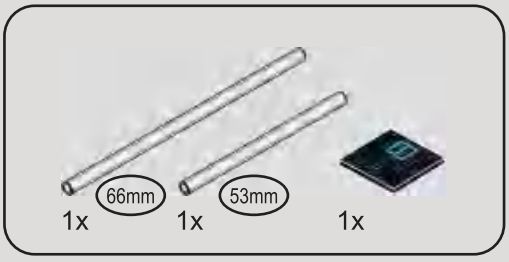

457

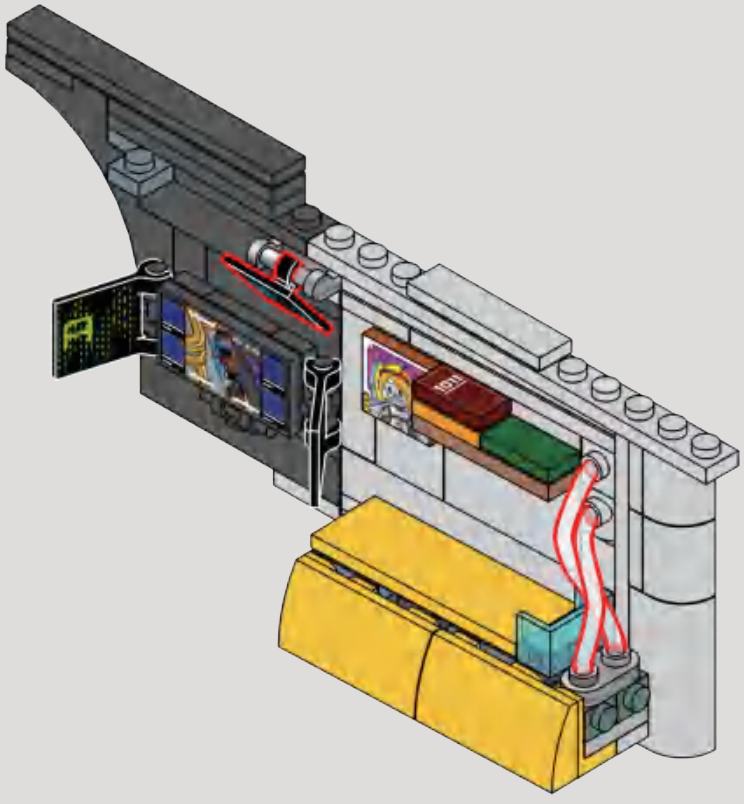
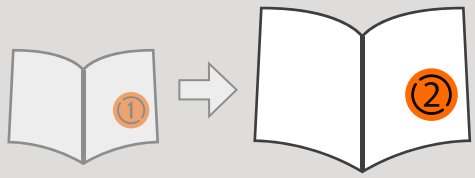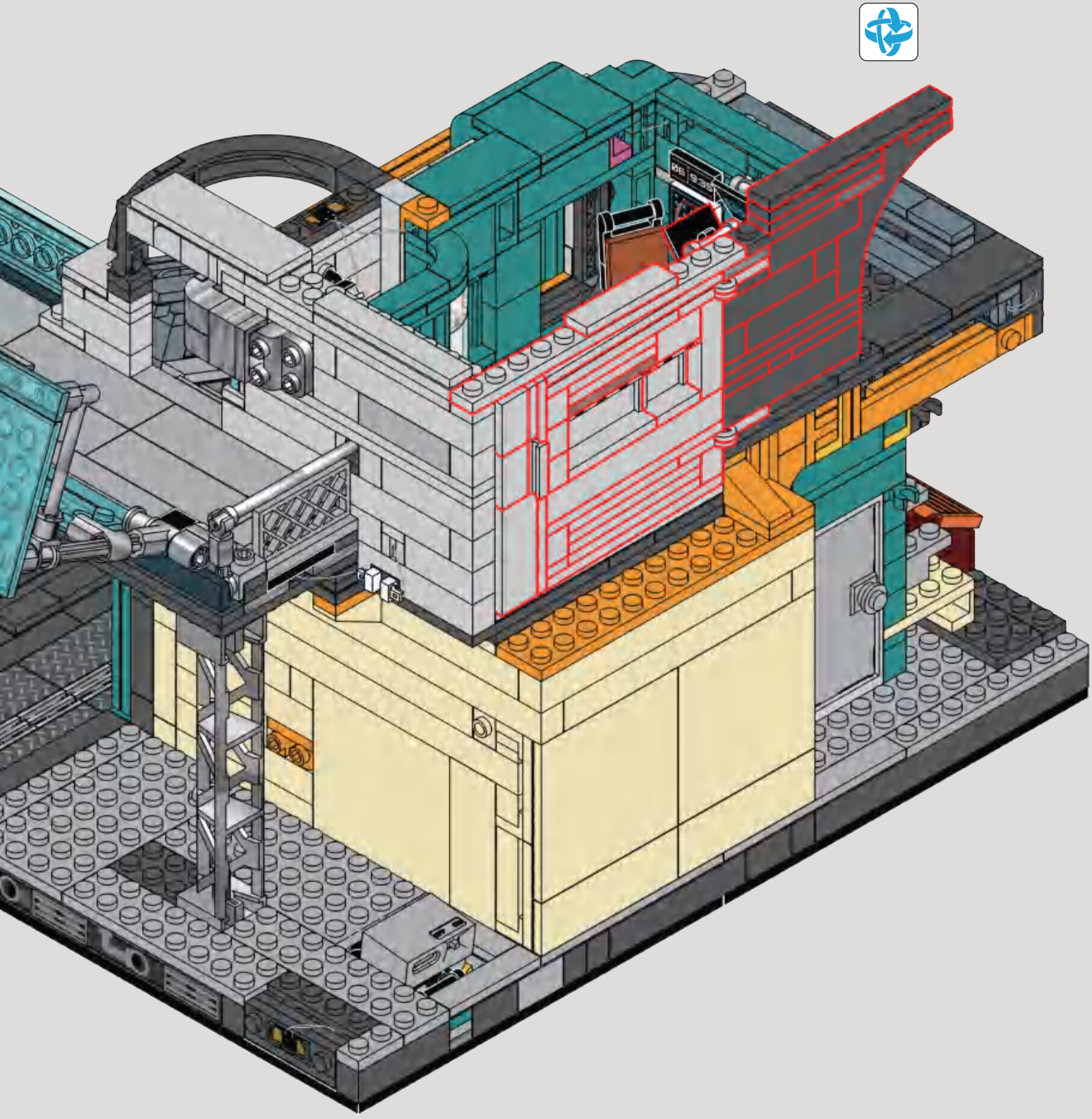
458