LUMIBRICKS™

19012
2557PCS
16+



MULTI-FORM MODULAR BUILDING

1

Scan the QR code
for a PDF instruction

扫码关注公众号
获取电子版说明书

Barbershop
Street Fusion

ABOUT LUMIBRICKS

Welcome to Lumibricks, where imagination meets illumination in the brick world!

Formerly known as FUNWHOLE, the world's first lighting bricks manufacturer, Lumibricks continues its legacy as a trailblazer in the world of building brick sets with a unique twist - integrated lighting that transforms every creation into a radiant masterpiece.

Every Lumibricks' set celebrates the joy of building and the magic of illumination. Whether you're crafting intricate architectures or imaginative scenes, the design details and lighting features bring the sets to life, and also bring you joy and shine whether it is the day or night.

At Lumibricks, we believe in the power of light to transform and elevate. With our slogan, "Delight day and night," we invite you to explore the possibilities of illuminated brick sets. Discover a hobby that doesn't just shine - it glows with your inner creativity.

欢迎来到Lumibricks灯搭的乐园

在这里，我们不仅仅是玩具制造商，我们还是创造快乐的艺术家。

自2014年诞生起，Lumibricks灯搭（原FUNWHOLE）就坚守一个独特的愿景：在日与夜的交替中，为我们的玩家揭示积木之美的无限可能。

作为全球领先的灯光积木品牌，本着充分表现积木套装整体之美的初衷，Lumibricks致力于灯光积木套装产品的开发，将积木与灯光合为一体。

Lumibricks不仅仅是一套普通的积木，更是代表了一种全新的玩乐方式，每一块积木，每一束光线，都承载着我们带给全球数百万家庭更多欢笑的承诺。

我们相信，积木有灯，生活有光，让Lumibricks与你一起，拼搭出更多乐趣，创造属于你的灯光宇宙。

DESIGNER'S NOTE

I still remember the warmth that touched my heart when I watched my favorite cartoon — the scene where a nervous musician stepped into a small barbershop, asking for a haircut, and was welcomed with a sense of home.
That moment defined what community means to me — a place of comfort, connection, and simple humanity.

We tried to recreate that feeling with this set — a slice of street life that lives deep in everyone's memory. A barber who knows you better than anyone else. Laughter and chatter filling the air. A hardworking solicitor living upstairs. People come here to meet, to talk, to be understood.



设计师的话

我仍记得那部最喜欢的动画片带来的温暖——一个紧张的音乐家走进街角的理发店，被熟悉的笑容迎接，就像回到了家。那一刻让我明白了“社区”的意义——舒适、连结、归属。

我们希望通过这套作品重现那份感觉：最最熟悉你需求的理发师、闲谈与欢笑、楼上忙碌且努力的律师。
这是一个人们相遇、交谈、被倾听的地方——一间记录时间与生活微妙变化的街头理发店。





Yeah, that's me — the young lawyer upstairs, still chasing my dream of justice. You can peek into my place through those pull-out floors, just don't walk off with my case files, alright?

Been here a while now, and Bob downstairs? Man, he's the heart of this whole block. Most nights I'm up on the rooftop, catching the sound of laughter and the buzz from the shop below.

没错, 那就是我——住在楼上的年轻律师, 仍在追逐心中的正义之梦。
你可以透过那层层可抽拉的结构瞥见我的世界, 但拜托, 别拿走我的案卷, 好吗?
我搬来这儿有一阵子了。楼下的Bob?伙计, 他可是这条街的灵魂。
每到夜晚, 我都会坐在屋顶, 听着理发店传来的笑声和喧闹。



ROTATABLE CHAIRS
座椅可旋转

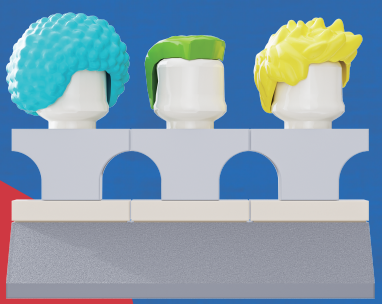

MULTIPLE HAIRSTYLE OPTIONS
发饰可挑选



SWITCHABLE TV SCENES – BOXING, SKATEBOARDING, STREET BALL
电视可换台



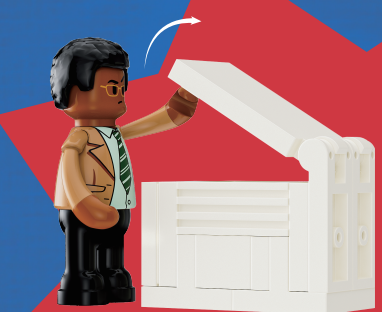

OPENABLE PRINTER
打印机可打开









SASHA 街头主播

Boris once invited me upstairs — for that graffiti "taboo" thing, you know?
Man's living a double life for sure. One side all suit and hustle, chasing that dream, and the other still vibin' like a carefree teen from the block.

Boris有次请我上楼——那个涂鸦禁令的事, 还记得吗?
这家伙绝对过着双重生活:一面是穿着西装拼命打拼的律师,
另一面又像个街区里永远长不大的少年。

DONALD 青年演员

Beard Bob? That's my guy.
I hit this place before every audition — get a fresh cut, new energy.
He's got this way of making you walk out feeling like you already booked the role.

Beard Bob?那可是我的英雄。
每次试镜前我都得来这里换个发型, 那人真懂得怎么让你重拾自信。
每次走出店门, 我都觉得自己已经拿下那个角色了。

WHAT'S INCLUDED

Please check and make sure you get all the items listed below.



Building Bricks



LED Light Kit

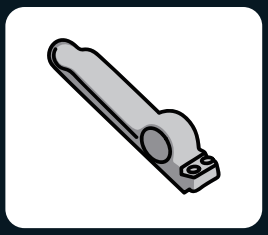

Brick Separator



User Manual

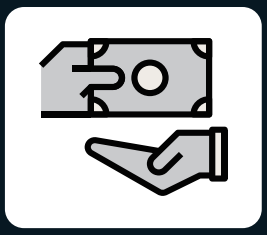

Service Card

TROUBLESHOOTING

The small size of lighting accessories makes them susceptible to damage during installation, and the following issues are common causes of failure.

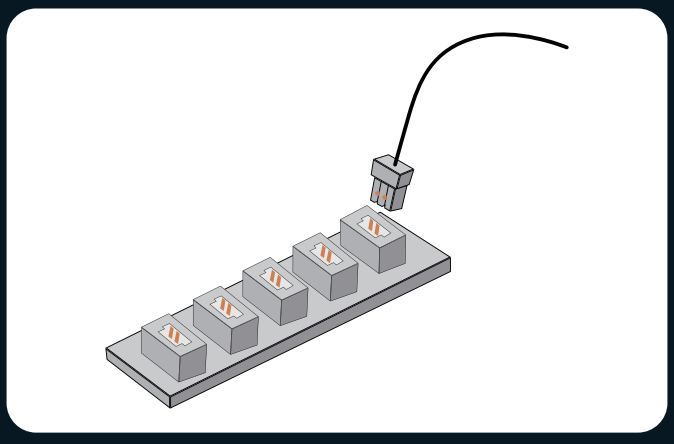

1.Ensure that the connectors are correctly installed as shown in the picture.

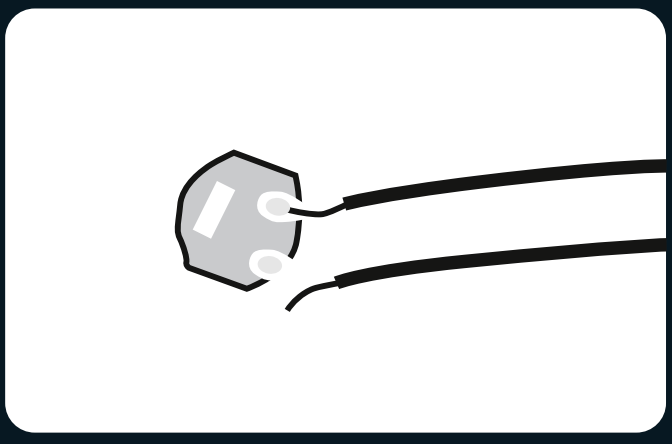

2.Check if the wires are disconnected or broken from the solder joints.

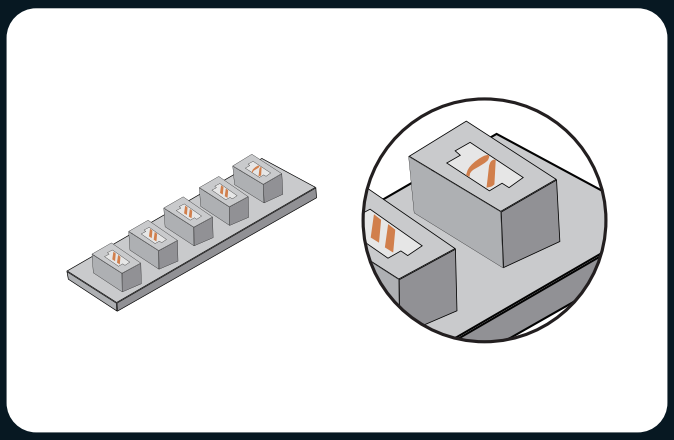

3.Check the internal pins of the connector sockets. The internal pins of a properly working connector port should be straight. If the small pins are bent, they may be considered faulty ports.

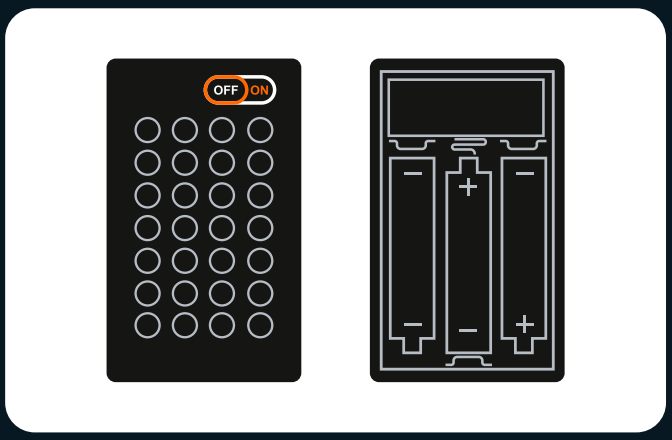

4.Check that the power switch on the battery box is on and that the "+" and "-" poles of the battery are correctly placed (using new batteries)and ensure that the upper and lower connections to the "+" and "-" poles of the power switch are installed correctly.

If you have checked each string of lights according to the guide above and the lights still do not light up, please contact our customer service for assistance.

⚠ WARNING:--Do not mix old and new batteries.--Do not mix alkaline, standard(carbon-zinc),or rechargeable batteries.

EN

SAFETY PRECAUTIONS

1. Before use, please make sure to check the voltage to avoid damage to the product and potential safety hazards.
2. The lights in the product are not replaceable. If they are damaged or not lighting up, please refer to the troubleshooting section or contact our customer service for assistance.
3. Avoid pulling on the light connection wires as this may cause damage.
4. Do not expose the product to water as it may damage the product.
5. Please read and follow the instructions carefully during building to ensure a good building experience.
6. This product doesn't include batteries or power banks. Please prepare your own batteries or power banks to power the LED light kits.
7. While there are several models available, the operating procedures and mechanism for Lumibricks expansion boards and battery boxes remain consistent. For inquiries, we encourage you to reach out to our customer service team for assistance.
8. Certain products are accompanied by a Type-C cable designed exclusively for use with the respective product. The USB end of the cable connects to a 5V DC power source, while the Type-C end connects to the Type-C expansion board.Please disconnect the input power when not in use for an extended period.
9. Do not simultaneously use multiple power sources to supply power to the LED light kits.

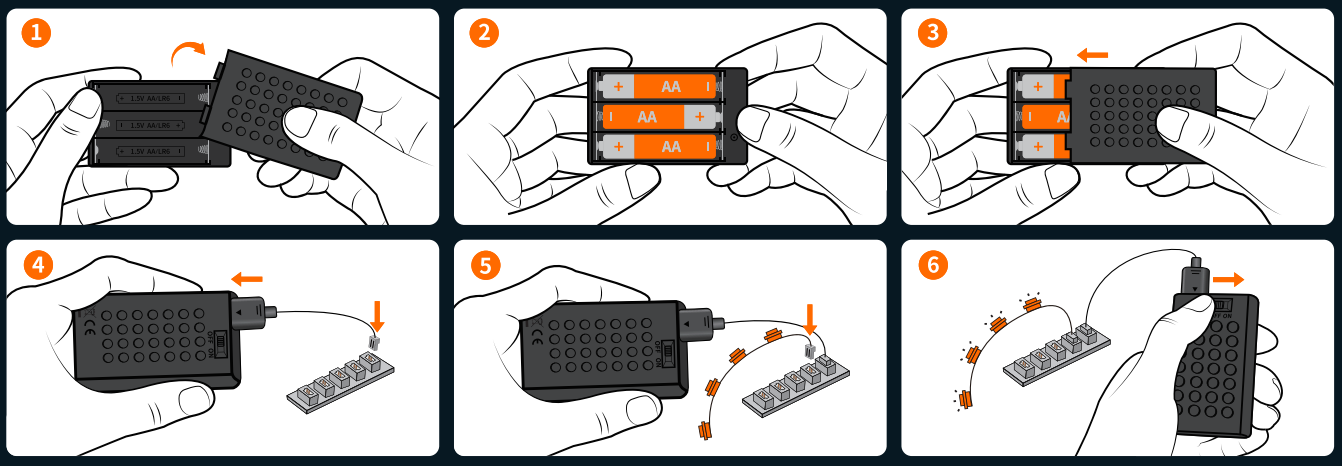

Battery box name: No. 5 building block battery box Battery type: AA*3 (No. 5) Battery rated voltage: 1.5V

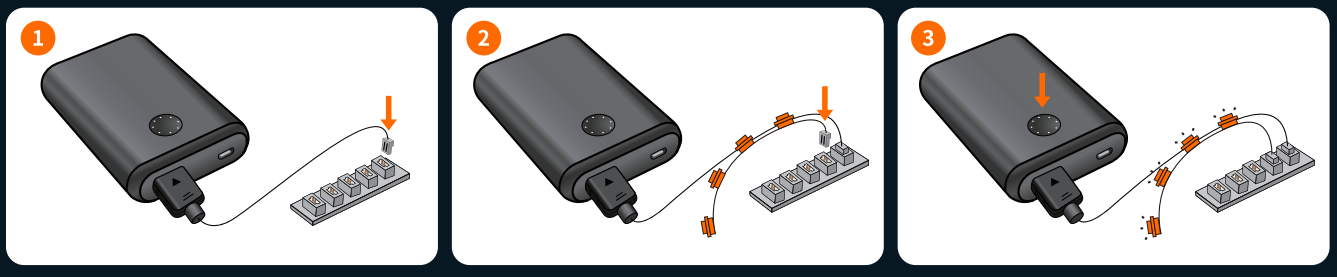

LED LIGHT KIT PACKAGE LIST

Please check and make sure you get all the lighting accessories. Contact us if there are any missing components.



Note: when installing, don't pull it hard, bend it or shake it to avoid damage. Not for children under sixteen.

EN

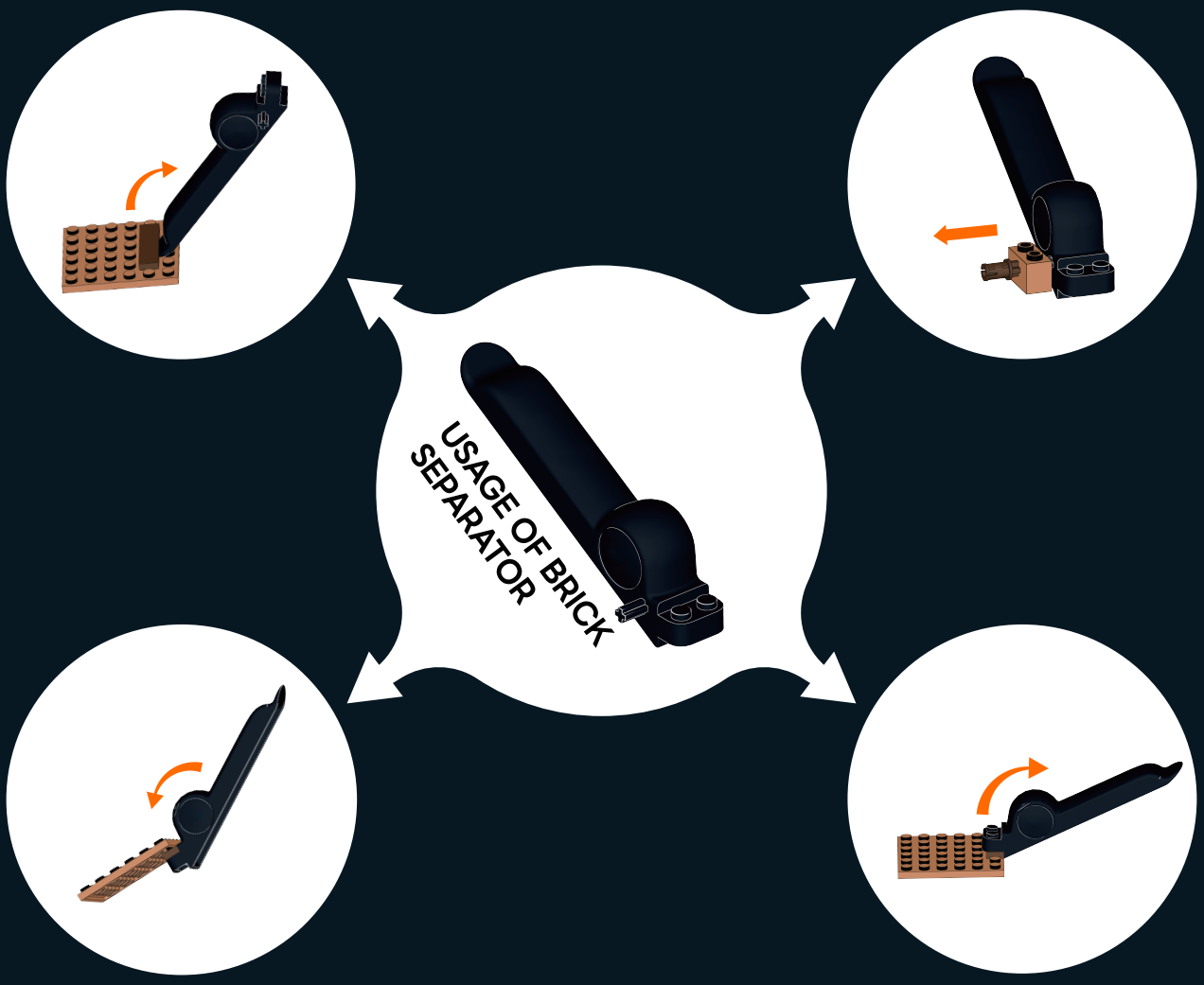

HOW TO UNPLUG THE CONNECTOR

Note that the new connector will be tight. To remove it, gently shake it from side to side until it loosens, then pull it out.

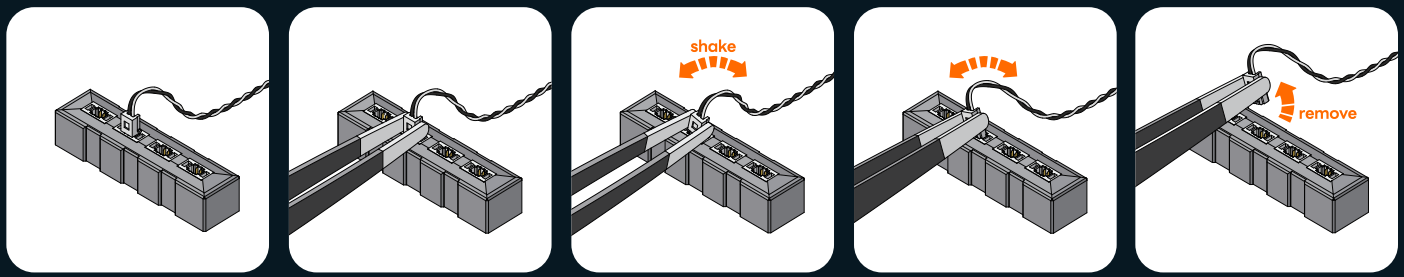

1.The connector is installed, as shown in the picture.

2.Use tweezers to hold the connector on both sides.

3.Gently shake the connector from side to side.

4.When the connector is tight, it will take several shakes to loosen it.

5.Remove the connector.

包装配件

请检查包装配件是否完整



积木包



LED 灯光配件包

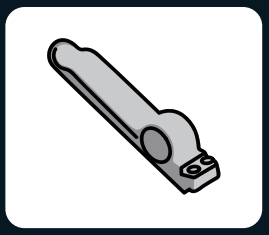

起件器



说明书

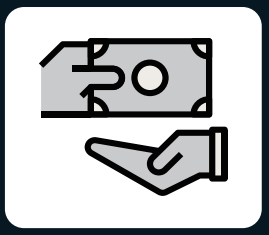

售后卡

灯饰配件故障排除指南

由于灯光配件的尺寸较小，容易因为操作不当而损坏，以下是常见的故障原因。

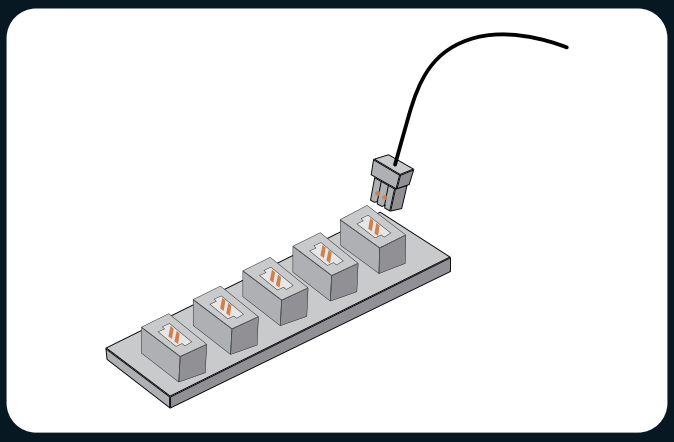

1.请检查连接器安装正确，如图所示。

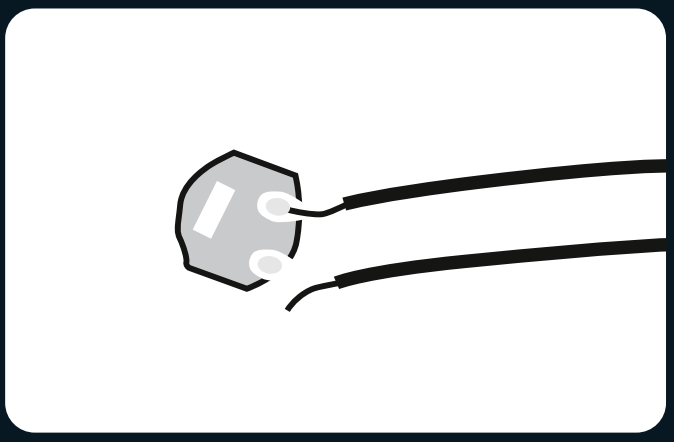

2.请检查电线是否从焊点脱落或断裂。

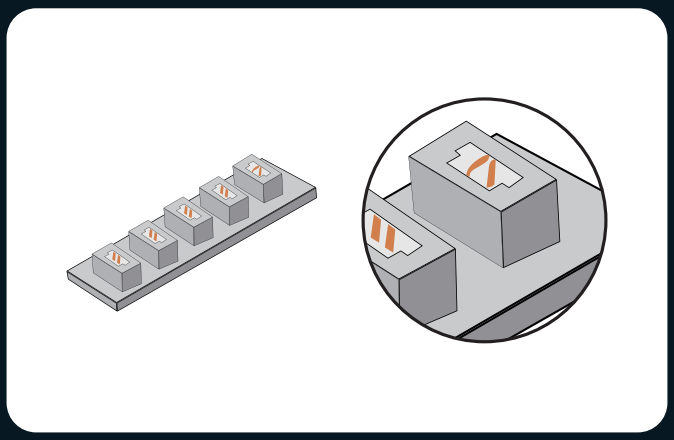

3.请检查连接器插口的内部引脚，工作正常的连接器端口内部小引脚应该是直的，如果是弯的小引脚则可以判断为故障端口。

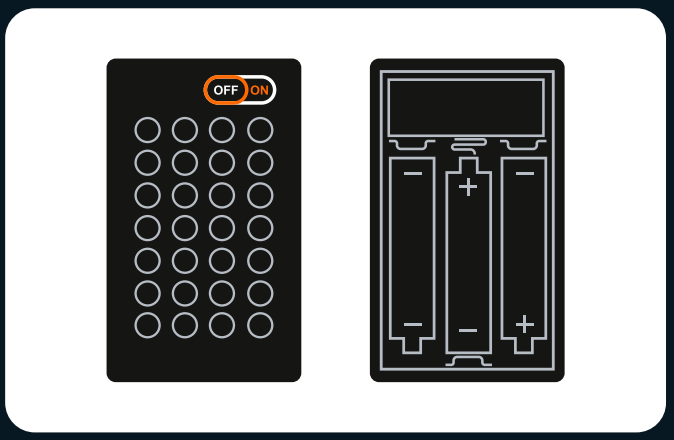

4.请检查电池盒的电源开关是开启状态并且电池“+”“-”极放置正确（确保您使用的是新电池。）
请确认上下连接电源开关“+”“-”极，安装无误。

如以上按照安装指南检查每一串灯，灯源还是不亮，请联系我们的客服。

ZH

灯饰配件安全使用注意事项

1. 使用前请确认工作电压，避免电压损坏产品带来安全隐患；
2. 此灯具光源不可替换，如损坏不亮请参考故障排查或联系我们的客服；
3. 请勿用力拉扯灯具连接线，以免损坏产品；
4. 请勿触碰水，以免损坏产品；
5. 体验安装过程中请仔细阅读并按照说明书进行操作，以免影响您的体验；
6. 本产品不包括电池或移动电源。请自备电池或电源为LED灯组供电；
7. 扩展板和电池盒存在多种型号，但使用方法和原理相似。有问题请联系客服；
8. 部分产品附送Type-C线，但仅支持本品使用，USB端连接5V直流电源，Type-C端连接Type-C扩展板。长时间不用时请断开输入电源；
9. 不可同时使用多种供电方式为LED灯组供电。

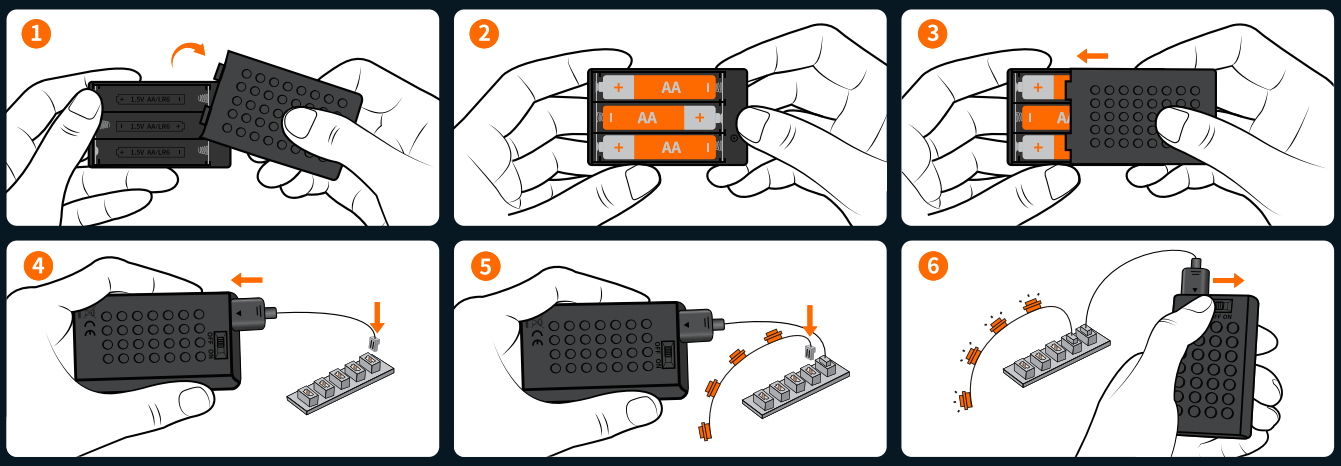

电池盒名称：5号积木电池盒　　电池型号：AA*3 (5号)　　电池额定电压：1.5V

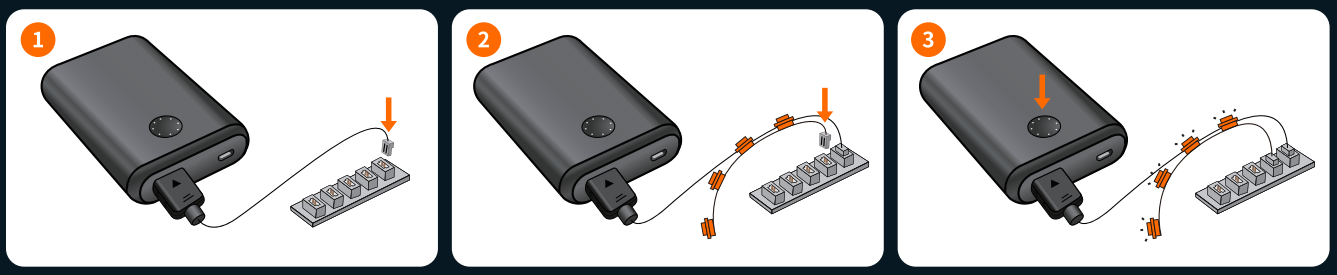

LED灯光配件包清单

请检查并确保您获得所有照明配件。如果有任何缺少的组件，请联系我们。



注意：在安装时，请不要用力拉扯、弯曲或摇晃它以避免损坏。不适合十六岁以下儿童使用。

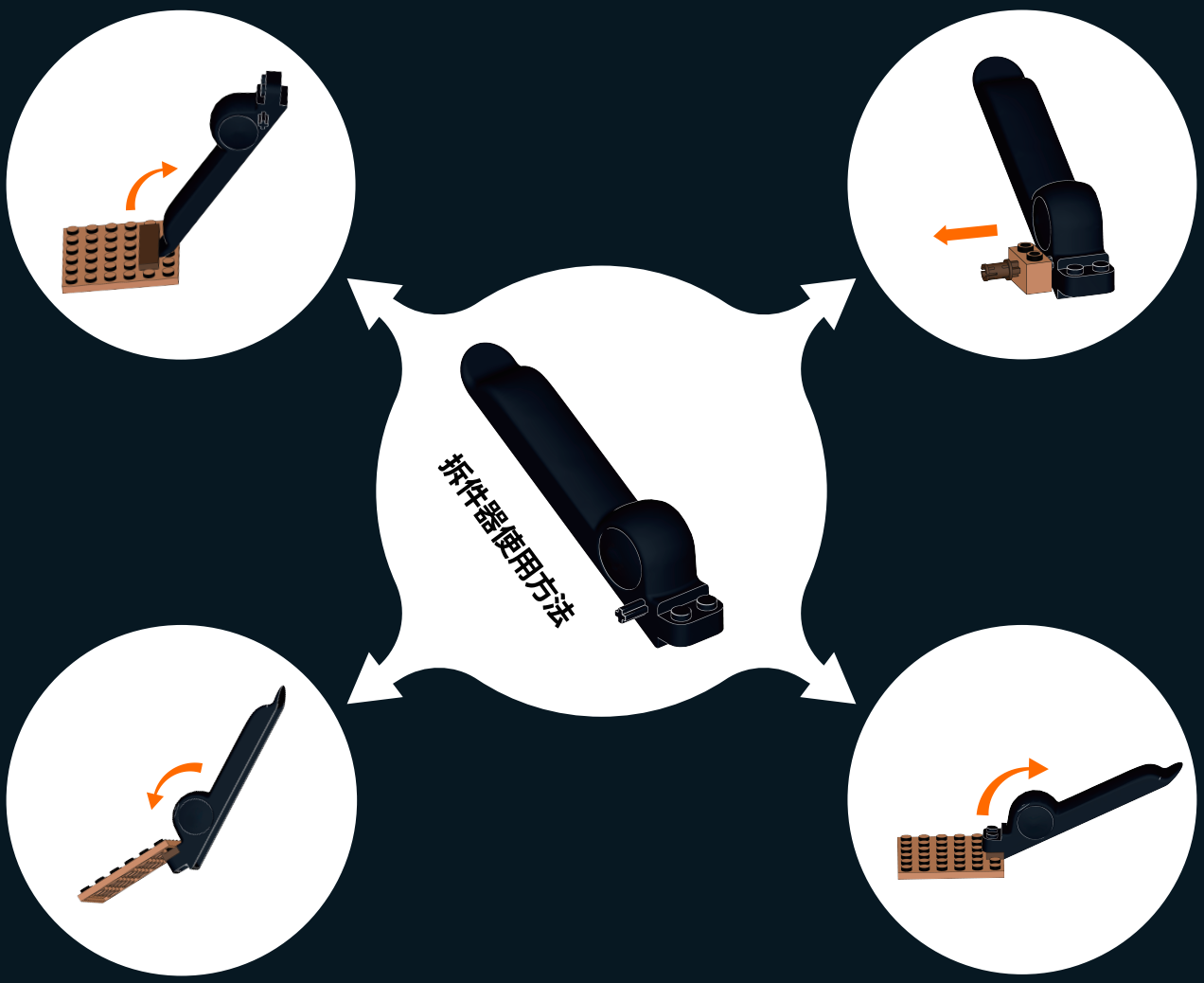

连接器拔插方法

请注意，新连接器会比较紧。要将其拔出，请轻轻地左右晃动，直到它松动，然后再拔出。

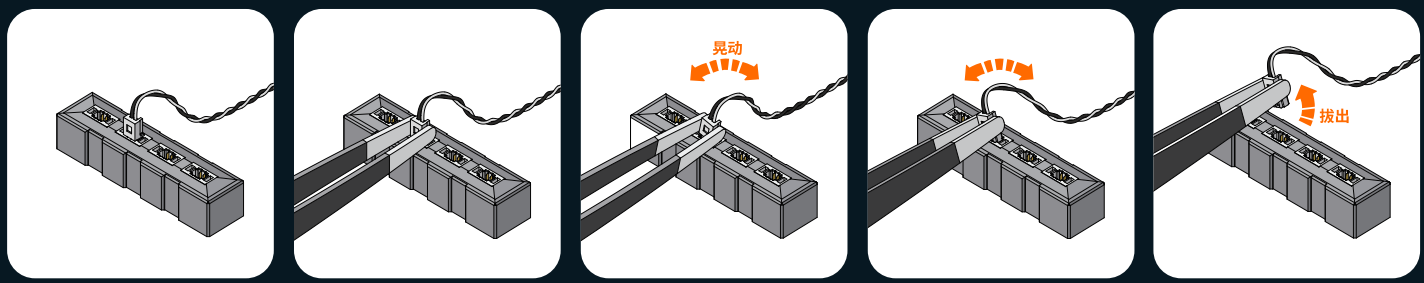

1. 连接器已安装，如图所示。
2. 使用镊子从两侧夹住连接器。
3. 轻轻地左右晃动连接器。
4. 如果连接器很紧，需要多次晃动才能松动。
5. 拔下连接器。

WAS IM LIEFERUMFANG ENTHALTEN IST

Bitte vergewissern Sie sich, dass Sie alle unten aufgeführten Artikel erhalten haben.



Bauklötze



LED-Licht-Kit

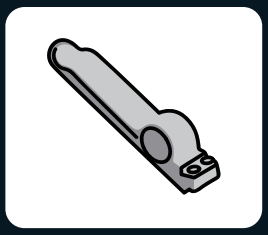

Bausteintrenner



Benutzerhandbuch

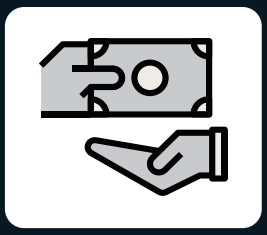

Servicekarte

FEHLERSUCHE

Die geringe Größe des Beleuchtungszubehörs macht es anfällig für Beschädigungen während der Installation. Die folgenden Probleme sind häufige Fehlerursachen.

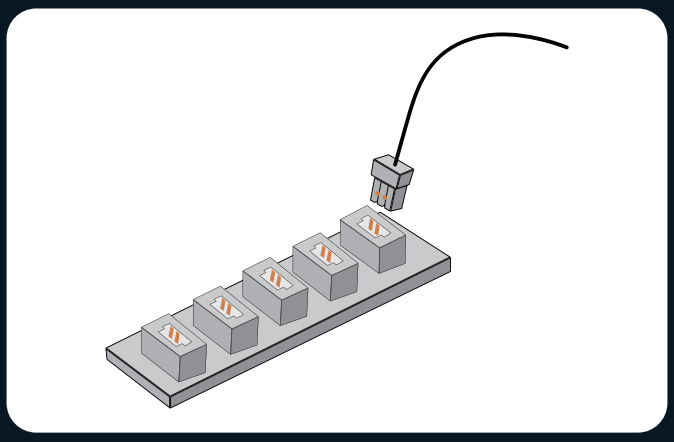

1.Vergewissern Sie sich, dass die Anschlüsse, wie in der Abbildung gezeigt, korrekt installiert sind.

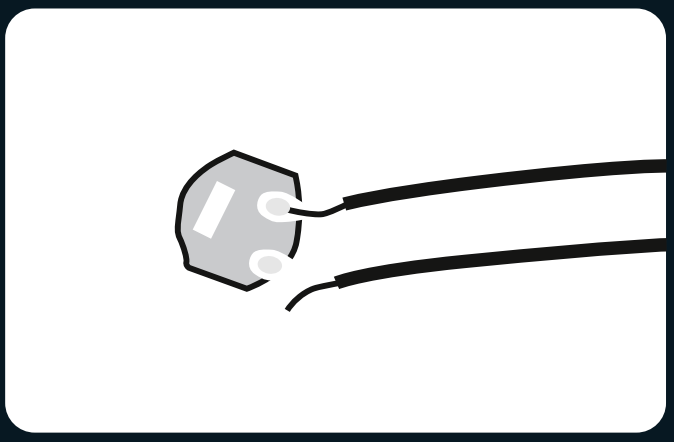

2.Prüfen Sie, ob sich die Drähte von den Lötstellen gelöst haben oder gebrochen sind.

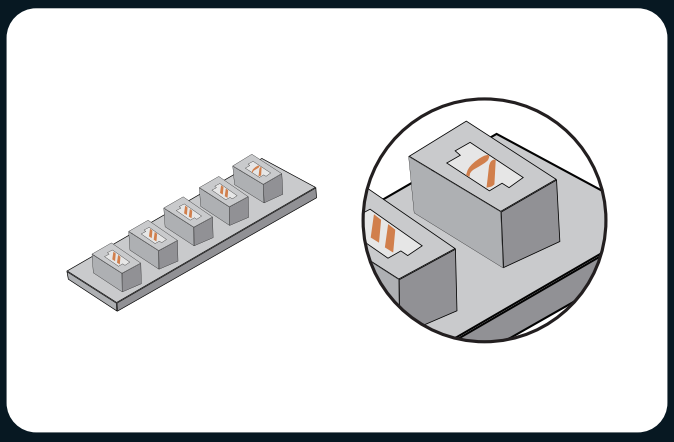

3.Überprüfen Sie die inneren Stifte der Steckerbuchsen. Die inneren Stifte eines ordnungsgemäß funktionierenden Anschlusses sollten gerade sein. Wenn die kleinen Stifte verbogen sind, können sie als fehlerhafte Anschlüsse betrachtet werden.

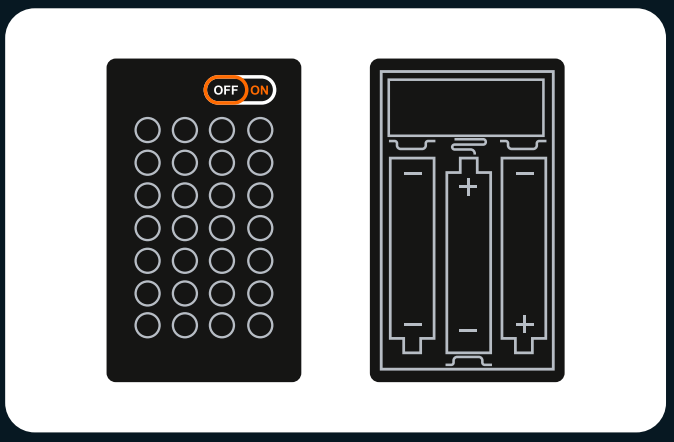

4.Prüfen Sie, ob der Netzschalter am Batteriekasten eingeschaltet ist und ob die Pole „+“ und „-“ der Batterie korrekt platziert sind (bei Verwendung neuer Batterien). Stellen Sie sicher, dass die oberen und unteren Anschlüsse an den Polen „+“ und „-“ des Netzschalters richtig installiert sind.

Wenn Sie die einzelnen Lichterketten gemäß der obigen Anleitung überprüft haben und die Lichter immer noch nicht leuchten, wenden Sie sich bitte an unseren Kundendienst, um Hilfe zu erhalten.

SICHERHEITSVORKEHRUNGEN

1. Prüfen Sie vor der Verwendung die Spannung, um Schäden am Produkt und mögliche Sicherheitsrisiken zu vermeiden.
2. Die Lichter in diesem Produkt sind nicht austauschbar. Wenn sie beschädigt sind oder nicht leuchten, lesen Sie bitte den Abschnitt Fehlerbehebung oder wenden Sie sich an unseren Kundendienst.
3. Ziehen Sie nicht an den Anschlussdrähten der Lampen, um Beschädigungen zu vermeiden.
4. Setzen Sie das Produkt nicht Wasser aus, da es dadurch beschädigt werden kann.
5. Lesen und befolgen Sie die Anweisungen sorgfältig während des Aufbaus, um eine optimale Bauerfahrung zu gewährleisten.
6. Dieses Produkt enthält keine Batterien oder Akkus. Bitte bereiten Sie Ihre eigenen Batterien oder Powerbanks vor, um das LED-Licht-Kit zu betreiben.
7. Obwohl es verschiedene Modelle gibt, bleiben die Betriebsverfahren und der Mechanismus für Lumibricks-Erweiterungsplatinen und Batteriekästen gleich. Bei Fragen wenden Sie sich bitte an unseren Kundendienst.
8. Bei bestimmten Produkten liegt ein Typ-C-Kabel bei, das ausschließlich für die Verwendung mit dem jeweiligen Produkt bestimmt ist. Das USB-Ende des Kabels sollte an eine 5V-Gleichstromquelle angeschlossen werden, während das Typ-C-Ende an die Typ-C-Erweiterungskarte angeschlossen wird.
9. Verwenden Sie nicht mehrere Stromquellen gleichzeitig, um das LED-Licht-Kit mit Strom zu versorgen.

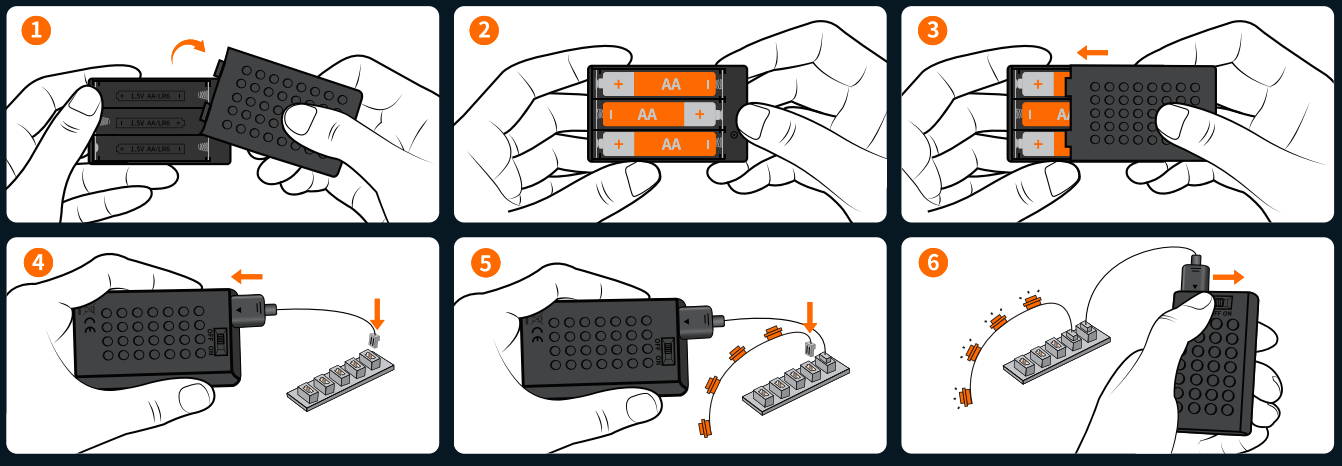

Name der Batteriebox: Nr. 5 Baustein-Batteriekasten Batterietyp: AA*3 (Nr. 5) Nennspannung der Batterie: 1,5 V

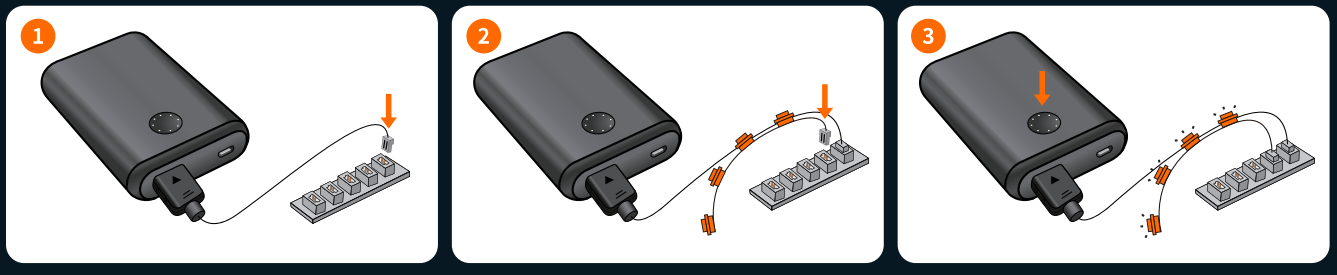

LED LIGHT KIT – PAKETLISTE

Bitte überprüfen Sie, ob Sie das gesamte Beleuchtungszubehör erhalten haben. Kontaktieren Sie uns, falls Komponenten fehlen sollten.



Hinweis: Beim Installieren nicht stark ziehen, biegen oder schütteln, um Schäden zu vermeiden.Nicht für Kinder unter sechzehn Jahren geeignet.

DE

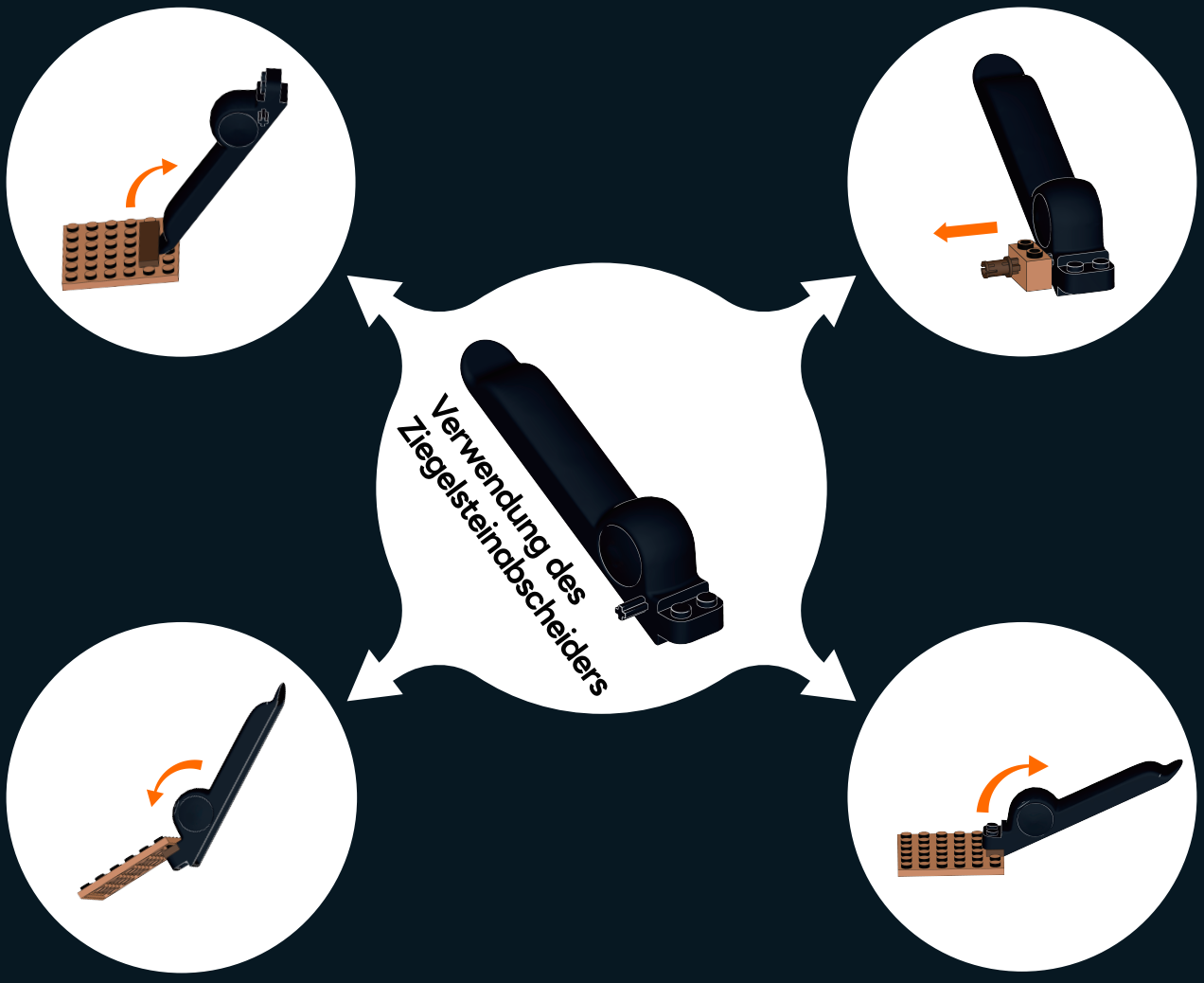

SO ENTFERNEN SIE DEN STECKVERBINDER

Beachten Sie, dass der neue Steckverbinder fest sitzen wird. Um ihn zu entfernen, schütteln Sie ihn vorsichtig von Seite zu Seite, bis er sich lockert, und ziehen Sie ihn dann heraus.

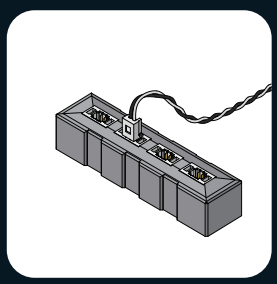

1. Der Steckverbinder ist installiert, wie auf dem Bild gezeigt.

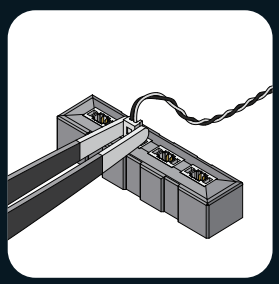

2. Verwenden Sie eine Pinzette, um den Steckverbinder an beiden Seiten zu halten.

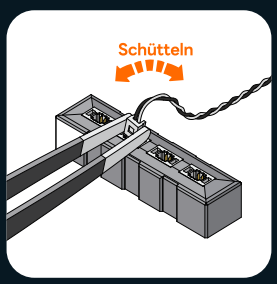

3. Schütteln Sie den Steckverbinder vorsichtig von Seite zu Seite.

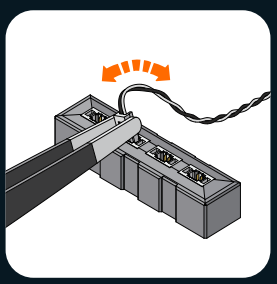

4. Wenn der Steckverbinder fest sitzt, sind mehrere Bewegungen erforderlich, um ihn zu lockern.

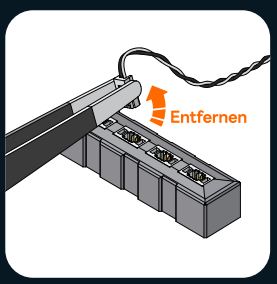

5. Entfernen Sie den Steckverbinder.

CE QUI EST INCLUS

Veuillez vérifier et vous assurer que vous avez bien reçu tous les articles mentionnés ci-dessous.



Briques de construction



Kit d'éclairage LED

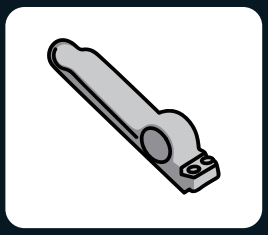

Séparateur de briques



Manuel d'utilisation

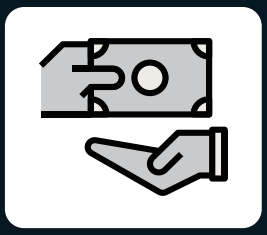

Carte de service

LE DÉPANNAGE

La petite taille des accessoires d'éclairage les rend susceptibles d'être endommagés lors de l'installation. Les problèmes suivants sont des causes fréquentes de défaillance.

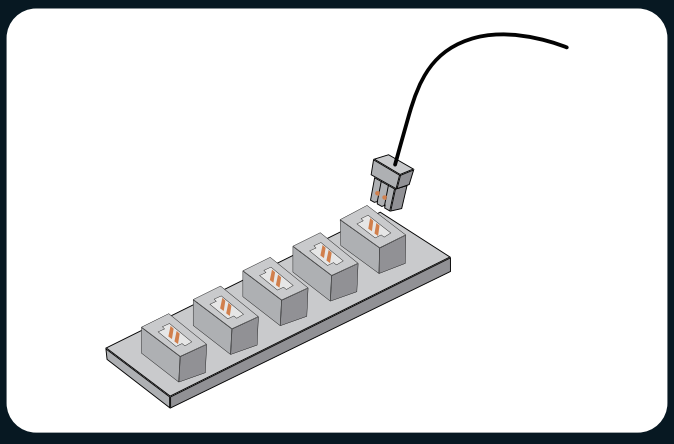

1.Assurez-vous que les connecteurs sont correctement installés comme indiqué sur l'image.

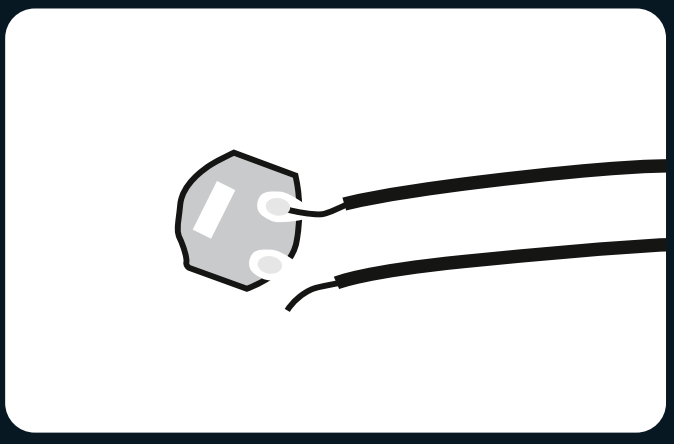

2.Vérifiez que les fils ne sont pas déconnectés ou cassés au niveau des joints de soudure.

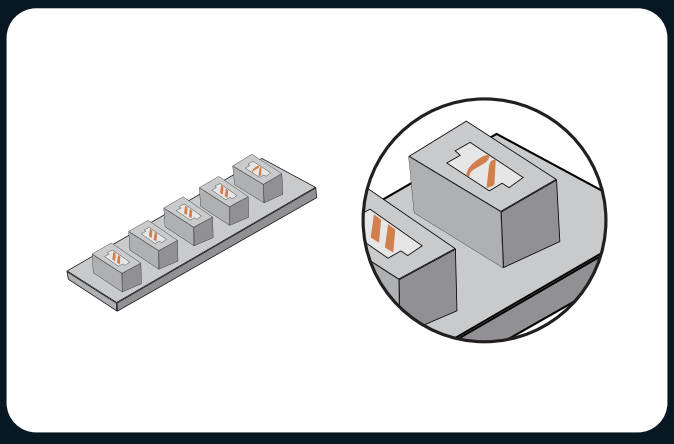

3.Vérifiez les broches internes des connecteurs. Les broches internes d'un port de connecteur fonctionnant correctement doivent être droites. Si les petites broches sont pliées, elles peuvent être considérées comme des ports défectueux.

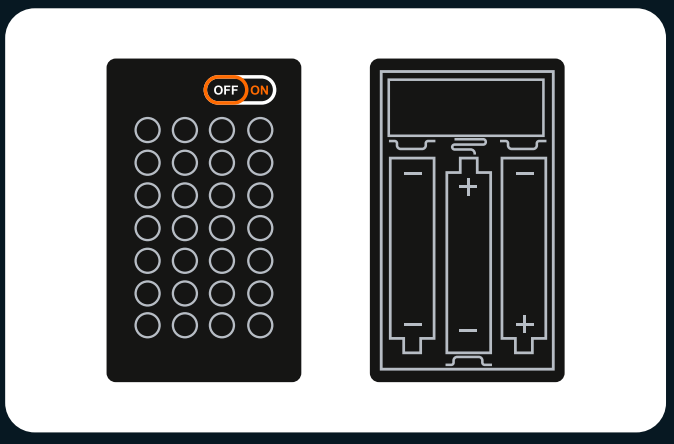

4.Vérifiez que l'interrupteur du boîtier de la batterie est en position de marche et que les pôles « + » et « - » de la batterie sont correctement placés (en utilisant des batteries neuves). Assurez-vous également que les connexions supérieures et inférieures aux pôles « + » et « - » de l'interrupteur sont correctement installées.

Si vous avez vérifié chaque guirlande lumineuse conformément au guide ci-dessus et que les lumières ne s'allument toujours pas, veuillez contacter notre service clientèle pour obtenir de l'aide.

⚠ AVERTISSEMENT:--Ne mélangez pas des piles neuves et des piles usagées.--Ne mélangez pas l'alcalin avec le standard

PRÉCAUTIONS DE SÉCURITÉ

1. Avant toute utilisation, veillez à vérifier la tension pour éviter d'endommager le produit et prévenir tout risque de sécurité.
2. Les lampes du produit ne sont pas remplaçables. Si elles sont endommagées ou ne s'allument pas, veuillez consulter la section de dépannage ou contacter notre service clientèle pour assistance.
3. Évitez de tirer sur les fils de connexion des lampes, car cela pourrait les endommager.
4. N'exposez pas le produit à l'eau, car cela pourrait l'endommager.
5. Veuillez lire et suivre attentivement les instructions lors de la construction pour garantir une expérience optimale.
6. Ce produit ne comprend pas de piles ni de banques d'alimentation. Veuillez préparer vos propres piles ou banques d'alimentation pour alimenter les kits de lumières LED.
7. Bien qu'il existe plusieurs modèles, les procédures de fonctionnement et le mécanisme des cartes d'extension Lumibricks et des boîtiers de piles restent cohérents. Si vous avez des questions, veuillez contacter notre service clientèle.
8. Certains produits sont fournis avec un câble Type-C conçu exclusivement pour être utilisé avec ce produit. L'extrémité USB du câble se connecte à une source d'alimentation 5V DC, tandis que l'extrémité Type-C se connecte à la carte d'extension Type-C. Veuillez déconnecter l'alimentation d'entrée lorsque vous ne l'utilisez pas pendant une période prolongée.
9. Ne pas utiliser simultanément plusieurs sources d'alimentation pour alimenter les kits d'éclairage LED.

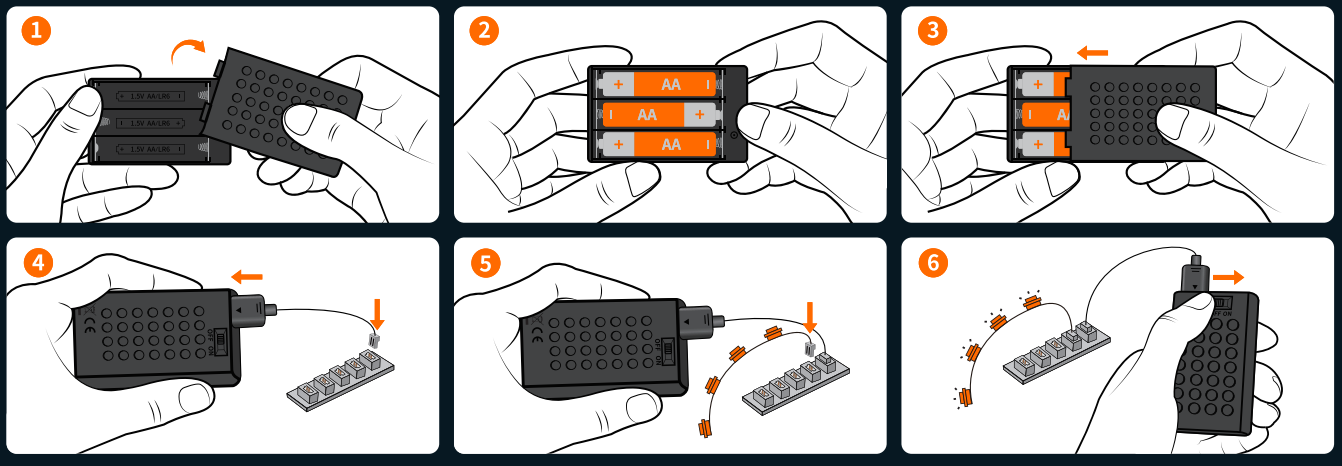

Nom du boîtier à piles: Boîtier de piles en blocs de construction n° 5 Type de piles: AA*3 (n° 5) Tension nominale de la pile: 1,5 V

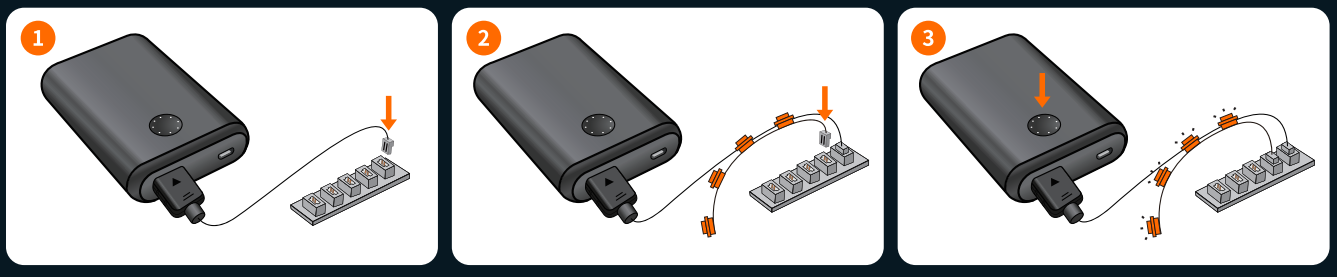

LISTE DE COLISAGE DU KIT D'ÉCLAIRAGE À LEDS

Veuillez vérifier et vous assurer que vous avez reçu tous les accessoires d'éclairage. Si des composants sont manquants, veuillez nous contacter.



Remarque : lors de l'installation, ne tirez pas fort, ne pliez pas et ne secouez pas pour éviter tout dommage. Ne convient pas aux enfants de moins de seize ans.

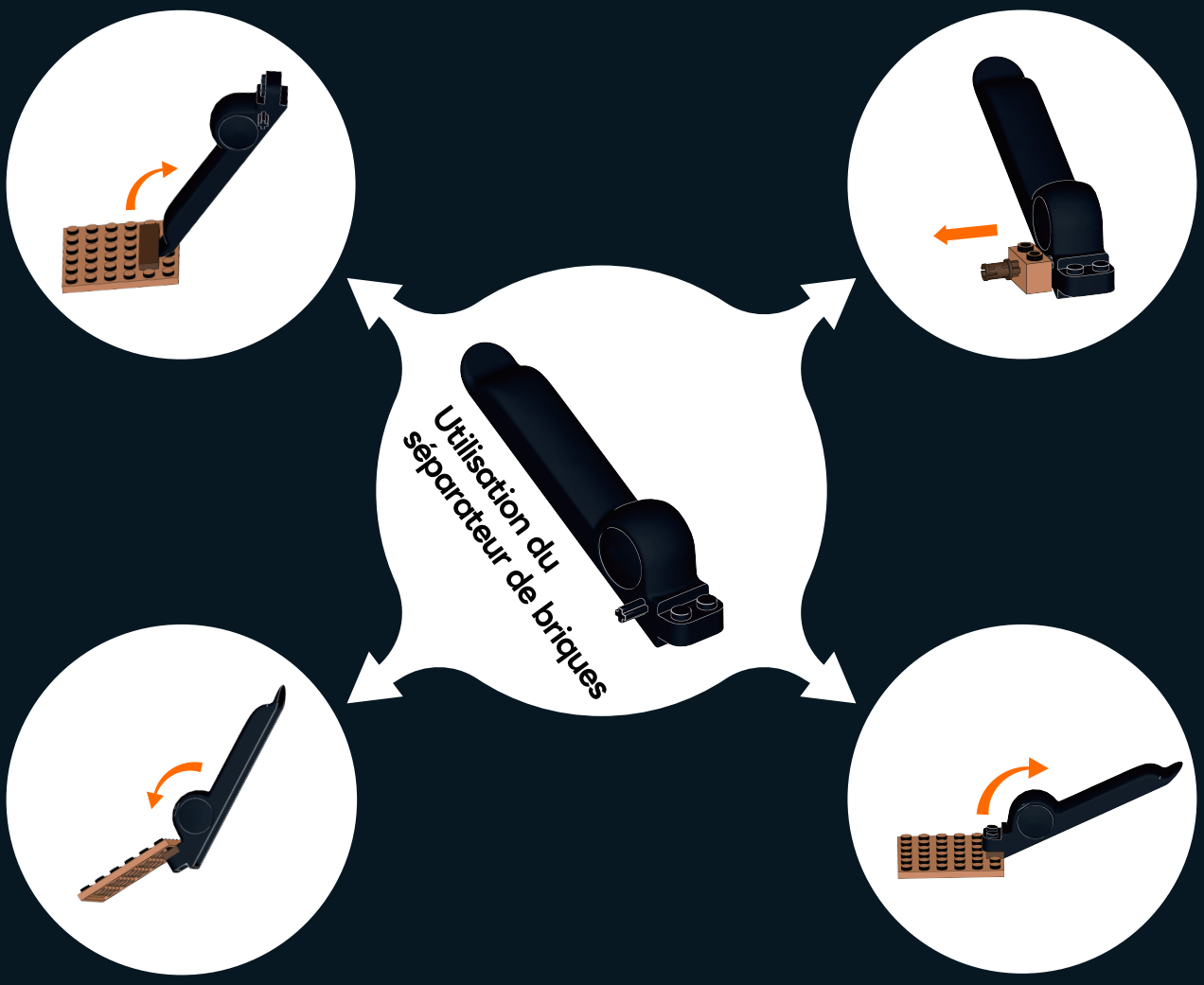

COMMENT DÉBRANCHER LE CONNECTEUR

Notez que le nouveau connecteur sera serré. Pour le retirer, secouez-le doucement d'un côté à l'autre jusqu'à ce qu'il se desserre, puis retirez-le.

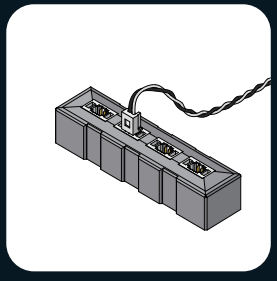

1. Le connecteur est installé, comme indiqué sur l'image.

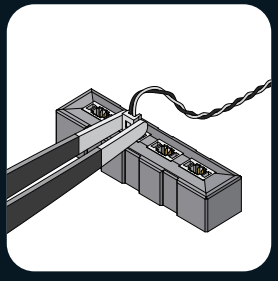

2. Utilisez une pince pour maintenir le connecteur des deux côtés.

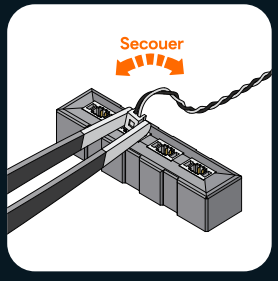

3. Secouez doucement le connecteur d'un côté à l'autre.

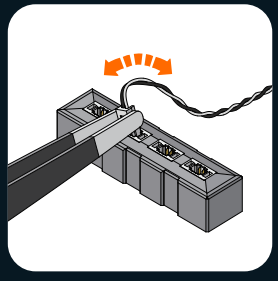

4. Si le connecteur est serré, il faudra plusieurs mouvements pour le desserrer.

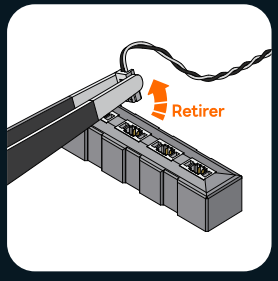

5. Retirez le connecteur.

COSA È INCLUSO

Controllare e assicurarsi di ricevere tutti gli articoli elencati di seguito.



Mattoni da costruzione



Kit di luci a LED

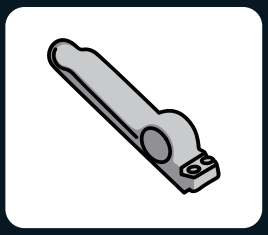

Separatore di mattoni



Manuale d'uso

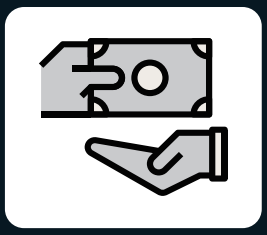

Scheda di servizio

RISOLUZIONE DEI PROBLEMI

Le dimensioni ridotte degli accessori per l'illuminazione li rendono suscettibili di danni durante l'installazione e i seguenti problemi sono cause comuni di guasto.

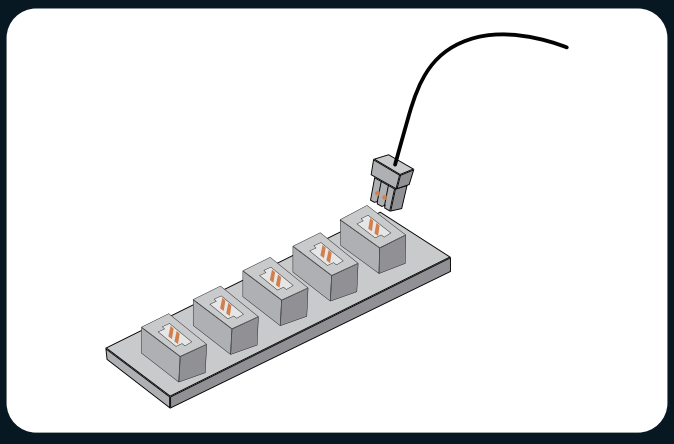

1.Assicurarsi che i connettori siano installati correttamente come mostrato nella figura.

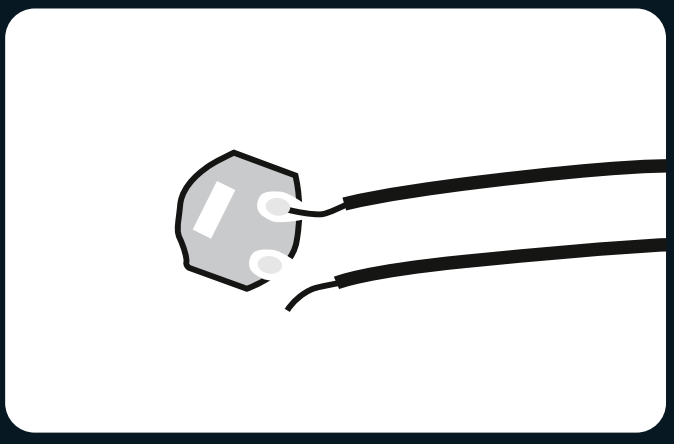

2.Controllare se i fili sono scollegati o rotti dalle saldature.

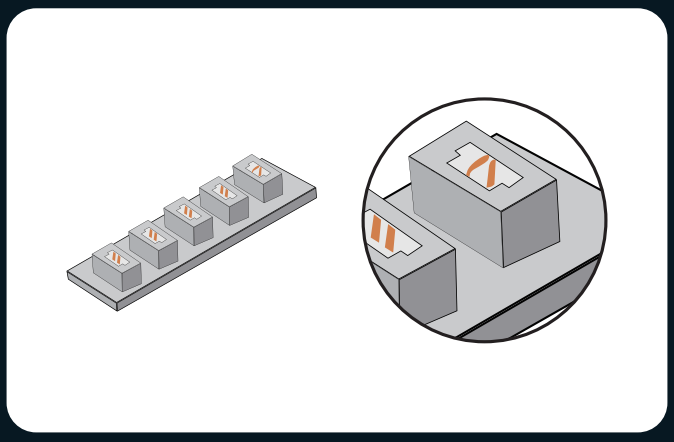

3.Controllare i pin interni delle prese dei connettori. I pin interni di una porta del connettore che funziona correttamente devono essere diritti. Se i piccoli pin sono piegati, possono essere considerati porte difettose.

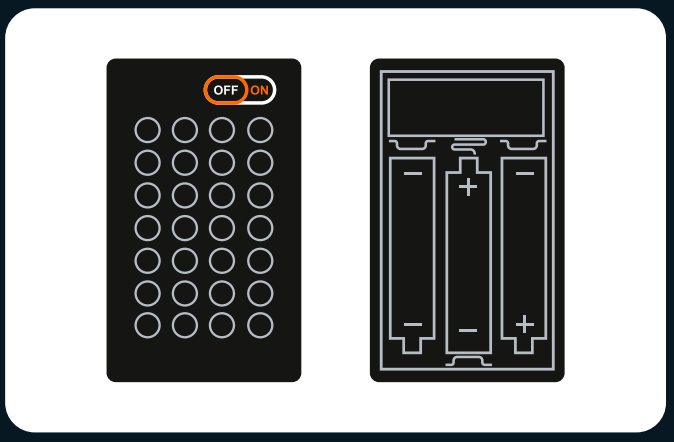

4.Verificare che l'interruttore di alimentazione sulla scatola della batteria sia acceso e che i poli “+” e “-” della batteria siano posizionati correttamente (utilizzando batterie nuove) e assicurarsi che i collegamenti superiori e inferiori ai poli “+” e “-” dell'interruttore di alimentazione siano installati correttamente.

Se avete controllato ogni stringa di luci secondo la guida di cui sopra e le luci non si accendono ancora, contattate il nostro servizio clienti per assistenza.

PRECAUZIONI DI SICUREZZA

1. Prima dell'uso, verificare il voltaggio per evitare danni al prodotto e potenziali rischi per la sicurezza.
2. Le luci del prodotto non sono sostituibili. Se sono danneggiate o non si accendono, consultare la sezione di risoluzione dei problemi o contattare il nostro servizio clienti per assistenza.
3. Evitare di tirare i fili di collegamento delle luci per evitare di danneggiarli.
4. Non esporre il prodotto all'acqua per non danneggiarlo.
5. Leggere e seguire attentamente le istruzioni durante la costruzione per garantire una buona esperienza di costruzione.
6. Questo prodotto non include batterie o power bank. Si prega di preparare le proprie batterie o power bank per alimentare i kit di luci LED.
7. Sebbene siano disponibili diversi modelli, le procedure e i meccanismi di funzionamento delle schede di espansione Lumibricks e delle scatole di batterie rimangono invariati. Per qualsiasi domanda, vi invitiamo a contattare il nostro servizio clienti per ricevere assistenza.
8. Alcuni prodotti sono accompagnati da un cavo Type-C progettato esclusivamente per l'uso con il rispettivo prodotto. L'estremità USB del cavo si collega a una fonte di alimentazione a 5 V CC, mentre l'estremità Type-C si collega alla scheda di espansione Type-C. Si prega di scollegare l'alimentazione di ingresso quando non viene utilizzata per un periodo prolungato.
9. Non utilizzare contemporaneamente più fonti di alimentazione per alimentare i kit di luci LED.

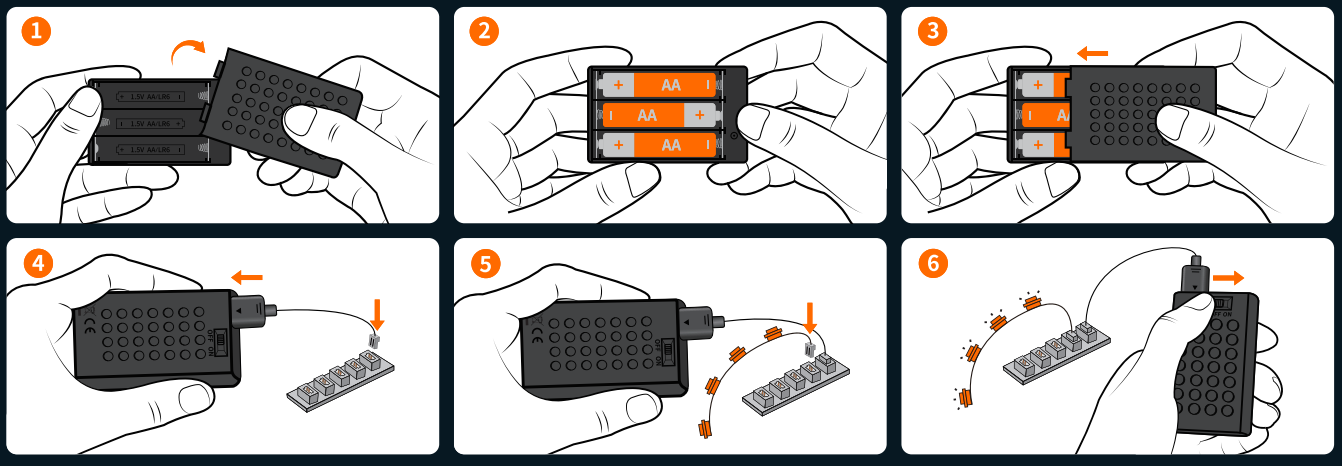

Nome della scatola della batteria: Scatola per batteria a blocchi n. 5
Tipo di batteria: AA*3 (No. 5)
Tensione nominale della batteria: 1,5 V

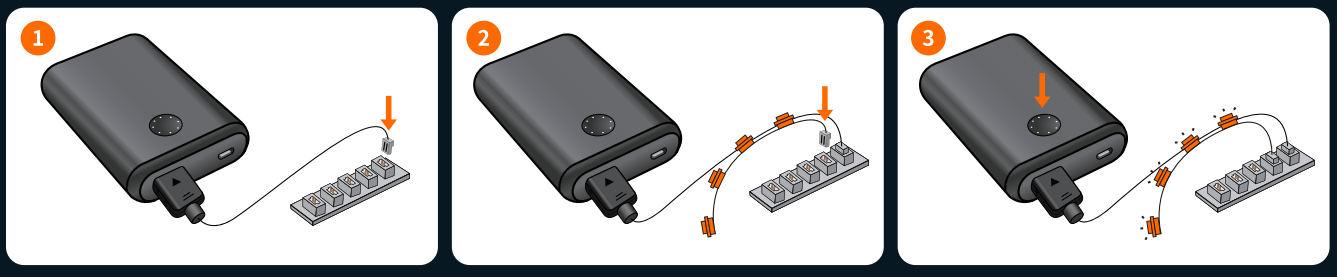

ELENCO DEI PACCHETTI DEL KIT LUCI A LED

Si prega di controllare e assicurarsi di ottenere tutti gli accessori di illuminazione. Contattateci se ci sono componenti mancanti.



Nota: durante l'installazione, non tirare forte, non piegare e non scuotere per evitare danni.Non adatto a bambini di età inferiore a sedici anni.

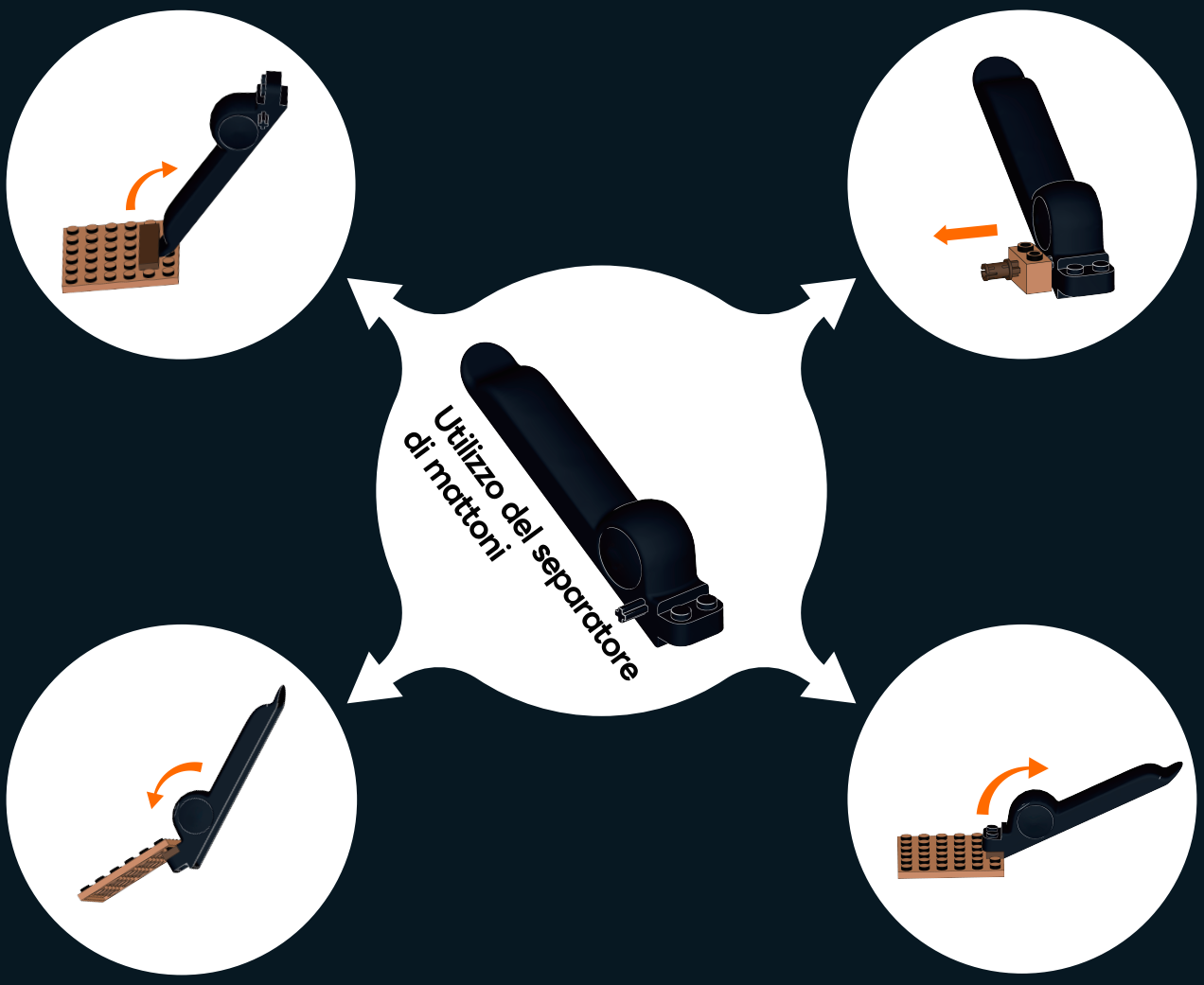

COME SCOLLEGARE IL CONNETTORE

Si noti che il nuovo connettore sarà stretto. Per rimuoverlo, scuoterlo delicatamente da un lato all'altro finché non si allenta, quindi estrarlo.

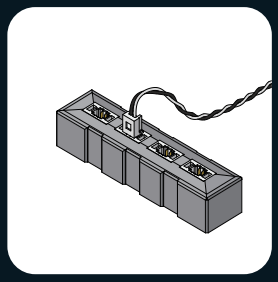

1. Il connettore è installato, come mostrato nell'immagine.

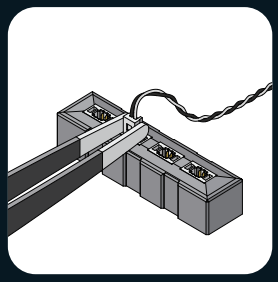

2. Utilizzare una pinzetta per tenere il connettore su entrambi i lati.

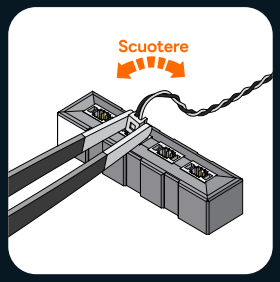

3. Scuotere delicatamente il connettore da un lato all'altro.

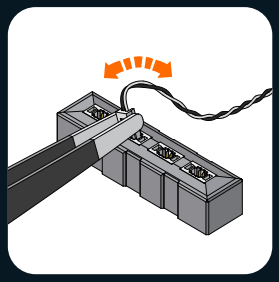

4. Quando il connettore è stretto, saranno necessarie diverse scosse per allentarlo.

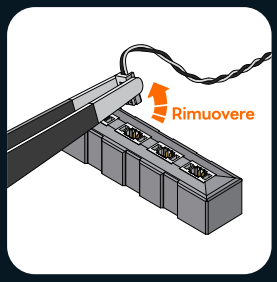

5. Rimuovere il connettore.

QUÉ SE INCLUYE

Por favor, compruebe y asegúrese de obtener todos los elementos que se enumeran a continuación.



Ladrillos de construcción



Kit de iluminación LED

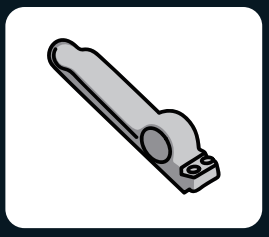

Separador de ladrillos



Manual del usuario

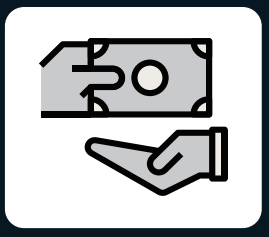

Tarjeta de servicio

SOLUCIÓN DE PROBLEMAS

El pequeño tamaño de los accesorios de iluminación los hace susceptibles de sufrir daños durante la instalación, y los siguientes problemas son causas comunes de avería.

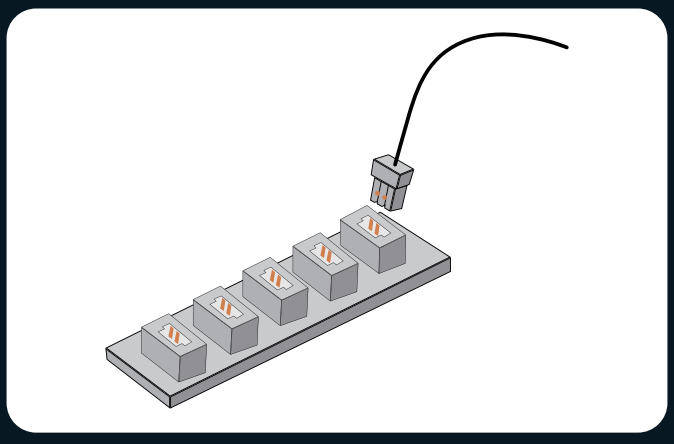

1.Asegúrese de que los conectores están correctamente instalados como se muestra en la imagen.

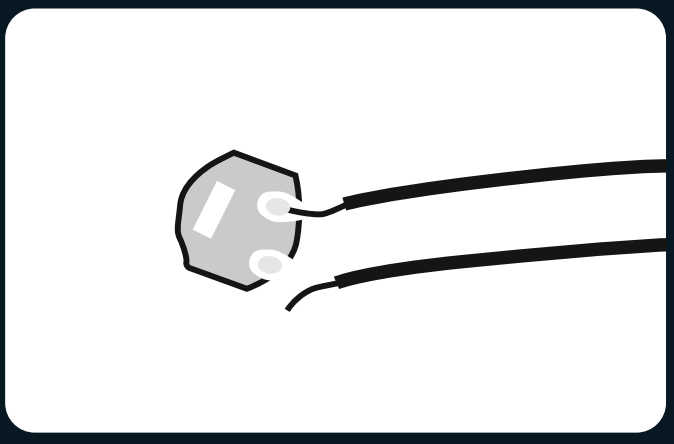

2.Compruebe si los cables están desconectados o rotos de las juntas de soldadura.

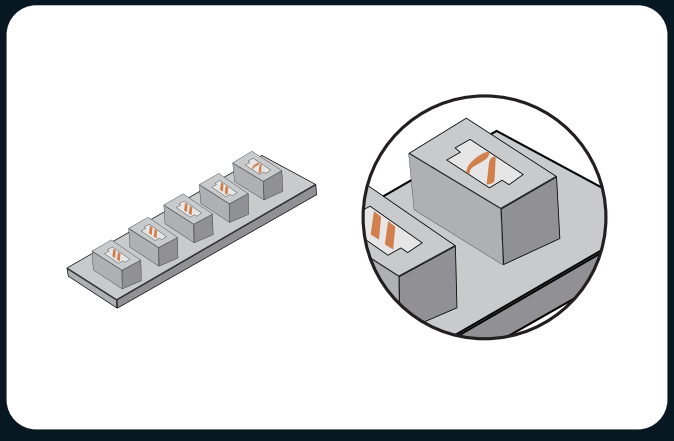

3.Compruebe las patillas internas de las tomas de los conectores. Las patillas internas de una toma de conector que funcione correctamente deben estar rectas. Si las pequeñas patillas están dobladas, pueden considerarse puertos defectuosos.

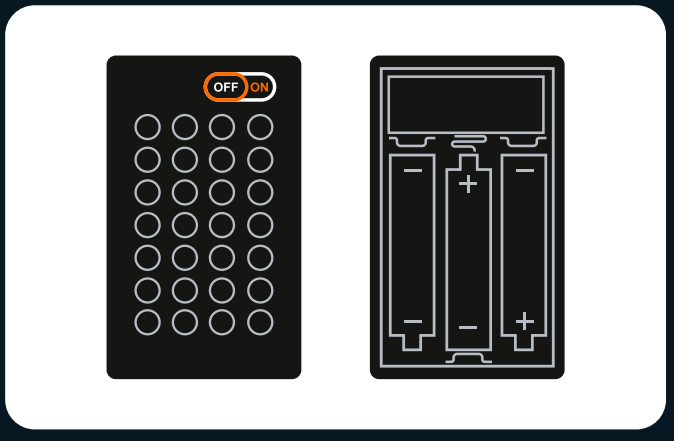

4.Compruebe que el interruptor de alimentación de la caja de la batería está encendido y que los polos «+» y «-» de la batería están colocados correctamente (utilizando baterías nuevas), y asegúrese de que las conexiones superior e inferior a los polos «+» y «-» del interruptor de alimentación están instaladas correctamente.

Si ha comprobado cada cadena de luces según la guía anterior y las luces siguen sin encenderse, póngase en contacto con nuestro servicio de atención al cliente para obtener ayuda.

PRECAUCIONES DE SEGURIDAD

1. Antes de utilizarlo, asegúrese de comprobar el voltaje para evitar daños en el producto y posibles riesgos para la seguridad.
2. Las luces del producto no son reemplazables. Si están dañadas o no se encienden, consulte la sección de solución de problemas o póngase en contacto con nuestro servicio de atención al cliente para obtener ayuda.
3. Evite tirar de los cables de conexión de las luces, ya que podría causar daños.
4. No exponga el producto al agua ya que podría dañarlo.
5. Por favor, lea y siga las instrucciones cuidadosamente durante la construcción para asegurar una buena experiencia de construcción.
6. Este producto no incluye pilas ni baterías. Por favor, prepare sus propias baterías o bancos de energía para alimentar los kits de luces LED.
7. Aunque hay varios modelos disponibles, los procedimientos de funcionamiento y el mecanismo de las tarjetas de expansión Lumibricks y las cajas de baterías siguen siendo los mismos. Para cualquier consulta, le animamos a ponerse en contacto con nuestro equipo de atención al cliente para obtener ayuda.
8. Algunos productos vienen acompañados de un cable Type-C diseñado exclusivamente para su uso con el producto respectivo. El extremo USB del cable se conecta a una fuente de alimentación de 5 V CC, mientras que el extremo Type-C se conecta a la placa de expansión Type-C. Desconecte la alimentación de entrada cuando no vaya a utilizar el producto durante un período prolongado.
9. No utilice simultáneamente varias fuentes de alimentación para suministrar energía a los kits de luces LED.

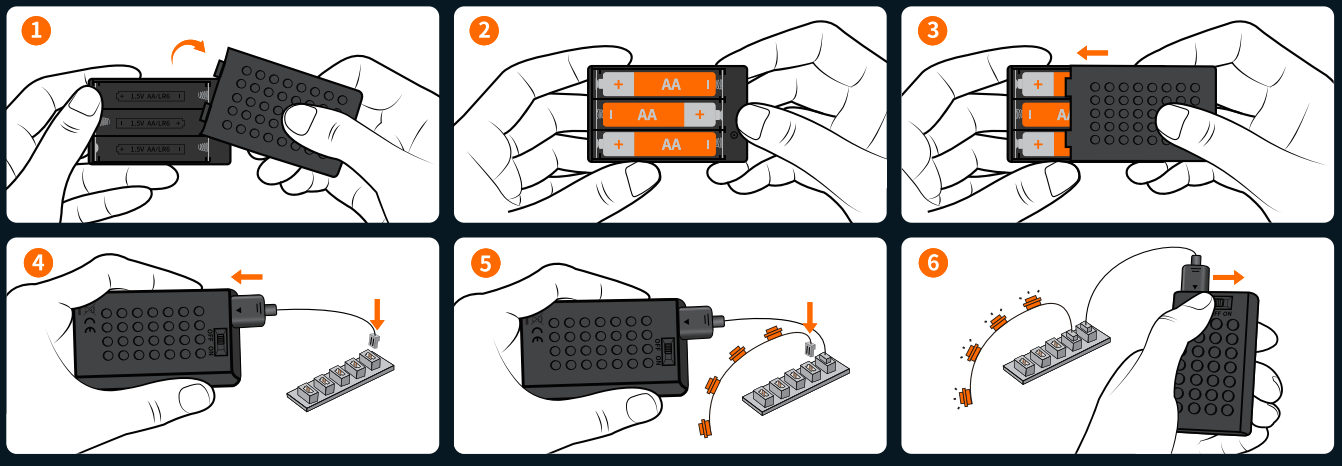

Nombre de la caja de baterías: Nº 5 caja de batería de bloque Tipo de pila: AA*3 (nº 5) Voltaje nominal de la pila: 1,5 V

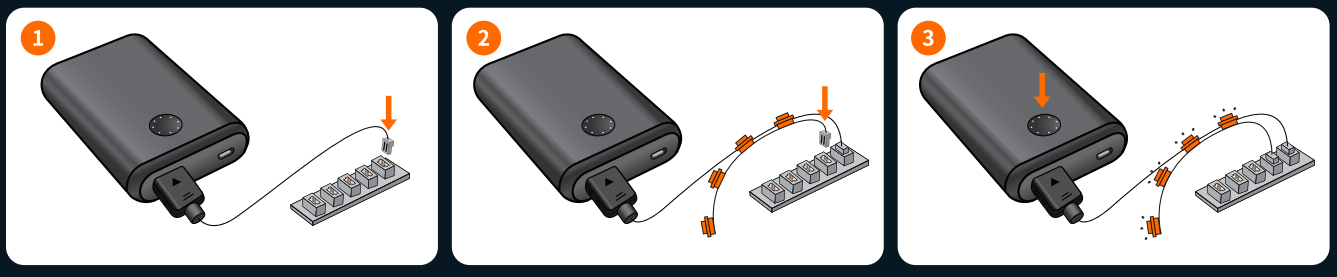

LISTA DE PAQUETES DEL KIT DE ILUMINACIÓN LED

Por favor, compruebe y asegúrese de obtener todos los accesorios de iluminación. Póngase en contacto con nosotros si hay componentes que faltan.



Nota: al instalar, no tire con fuerza, no doble ni agite para evitar daños. No apto para niños menores de dieciséis años.

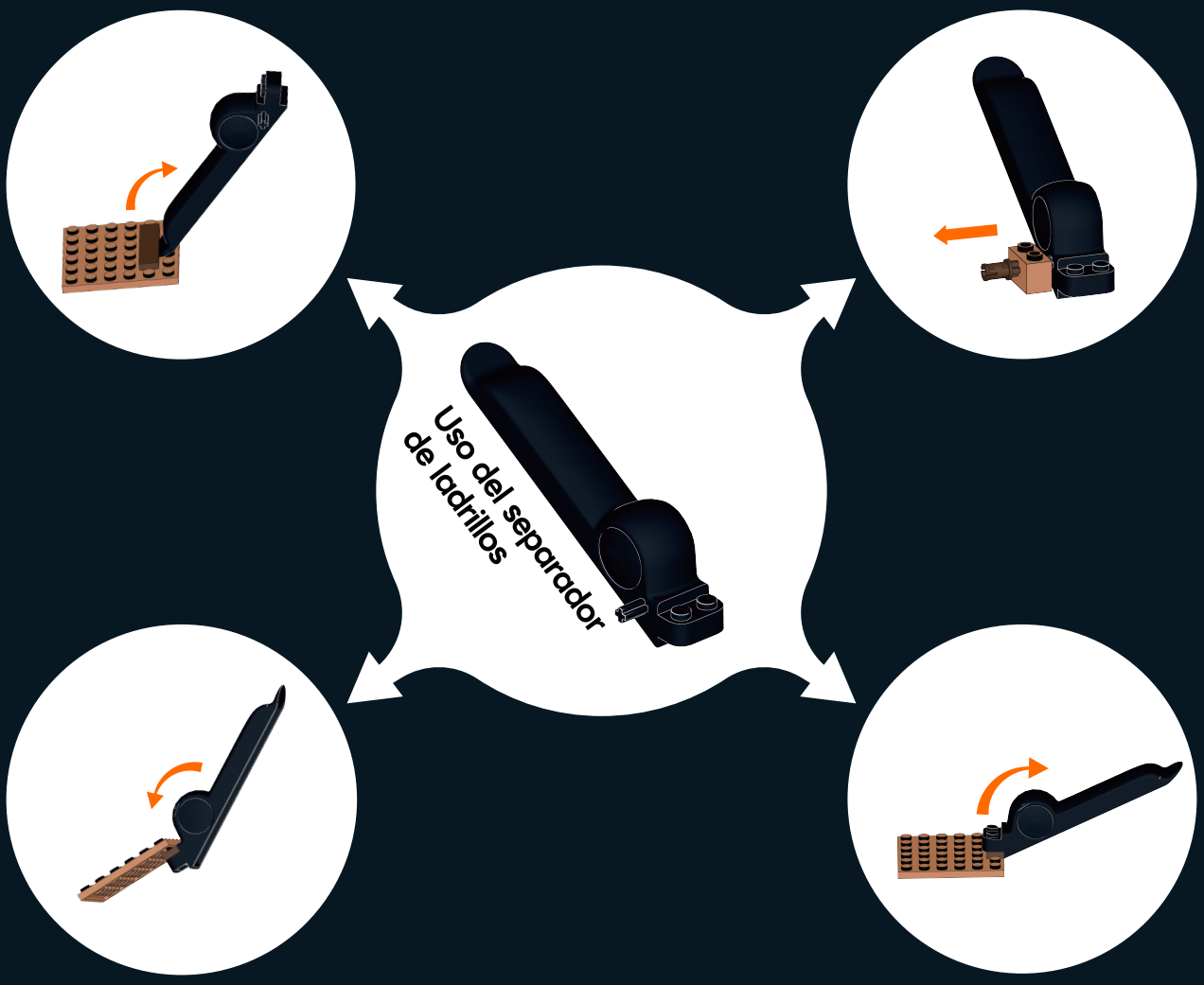

CÓMO DESCONECTAR EL CONECTOR

Tenga en cuenta que el nuevo conector estará ajustado. Para retirarlo, muévalo suavemente de lado a lado hasta que se afloje y luego sáquelo.

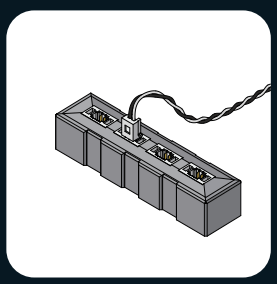

1. El conector está instalado, como se muestra en la imagen.

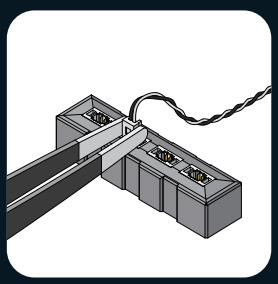

2. Utilice unas pinzas para sujetar el conector por ambos lados.

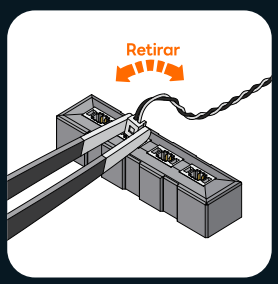

3. Mueva suavemente el conector de lado a lado.

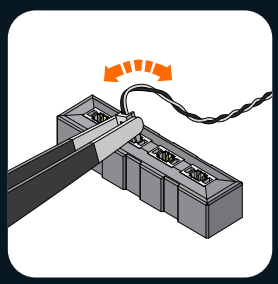

4. Si el conector está ajustado, será necesario moverlo varias veces para aflojarlo.

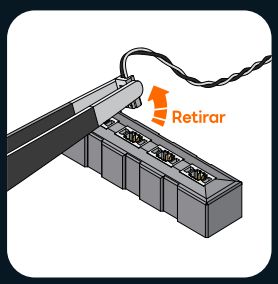

5. Retire el conector.


1-6
F
S
LUMIBRICKS
01
LUMIBRICKS
02


1


BARBER
BEARD BOB'S BARBER
718-555-XXX
FADE | LINE-UP | BRAIDS | LOCS
NO.012
SHAVE & GROOMING
HOT SHAVE | BEARD TRIM | RAZOR CUT
BARBER SHOP


7-10
F
S
LUMIBRICKS
03
Daylight
Day And Night

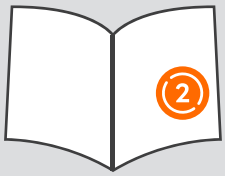
2


BARBER
XXX
555
212
SHAVE & GROOMING
HOT SHAVE | BEARD TRIM | RAZOR CUT
BEARD BOB'S BARBER
718-555-XXX
FADE | LINE-UP | BRAIDS | LOCS
NO.012
BEARD BOB'S BARBER


11-15
F
S
LUMIBRICKS
03


3

BEARD BOB'S
BARBER
Block Cuts
BARBER
SHAVE & GROOMING
HOT SHAVE | BEARD TRIM | RAZOR CUT
BEARD BOB'S BARBER
FADE | LINE-UP | BRAIDS | LOCS
718-555-XXX
NO.012

ZH 灯光检查

EN Check Light

FR Contrôle de lumière

DE Lichtcheck

IT Controllo luci

ES Chequeo de luz

1

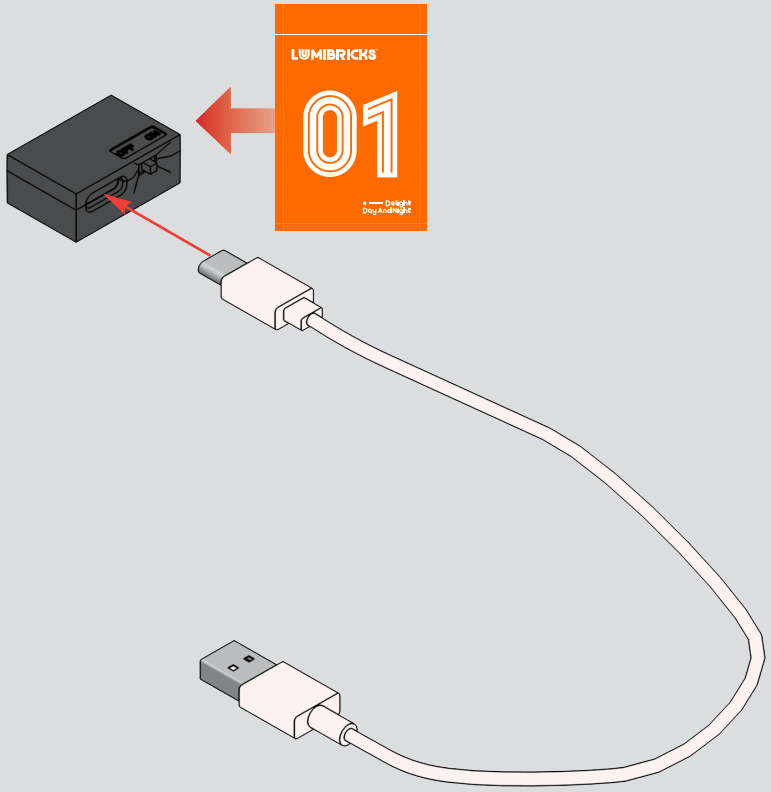

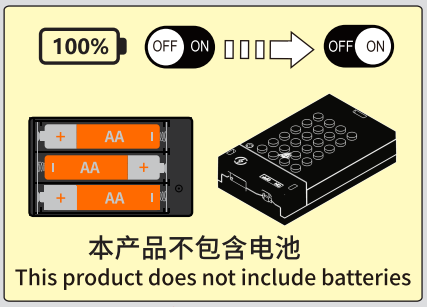

本产品不包含电池
This product does not include batteries

2

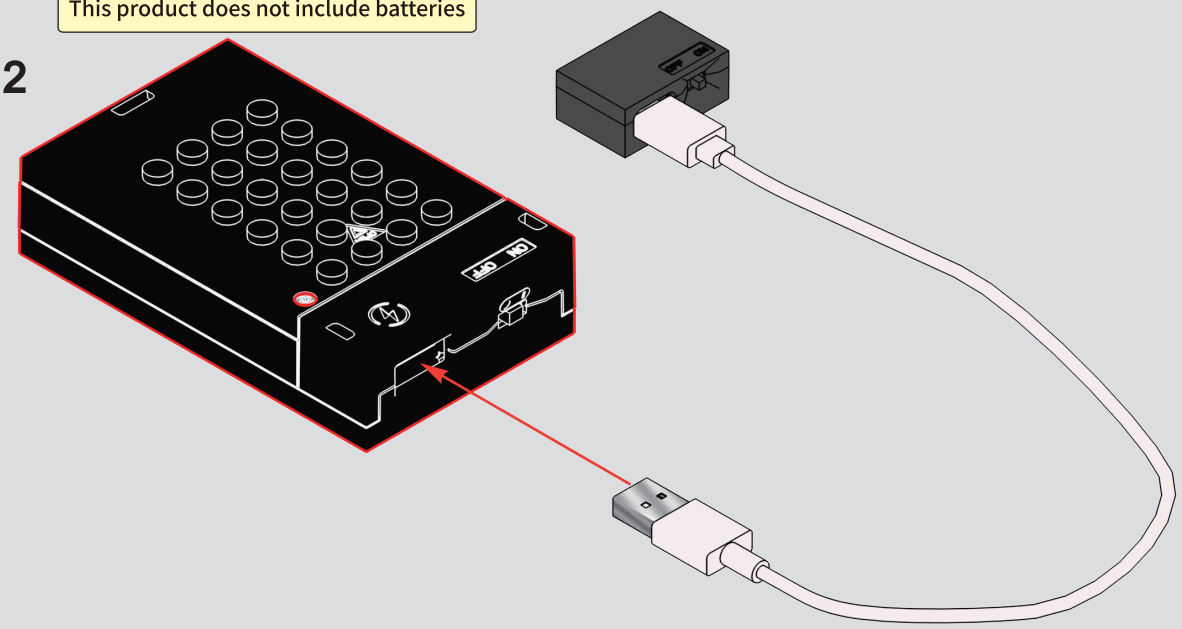

3

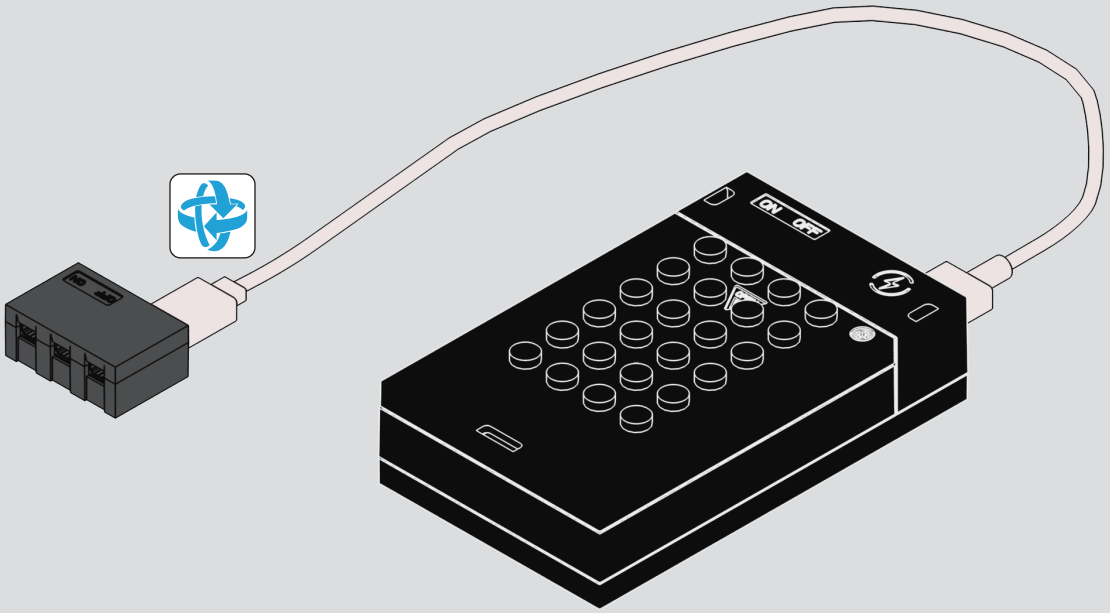

4

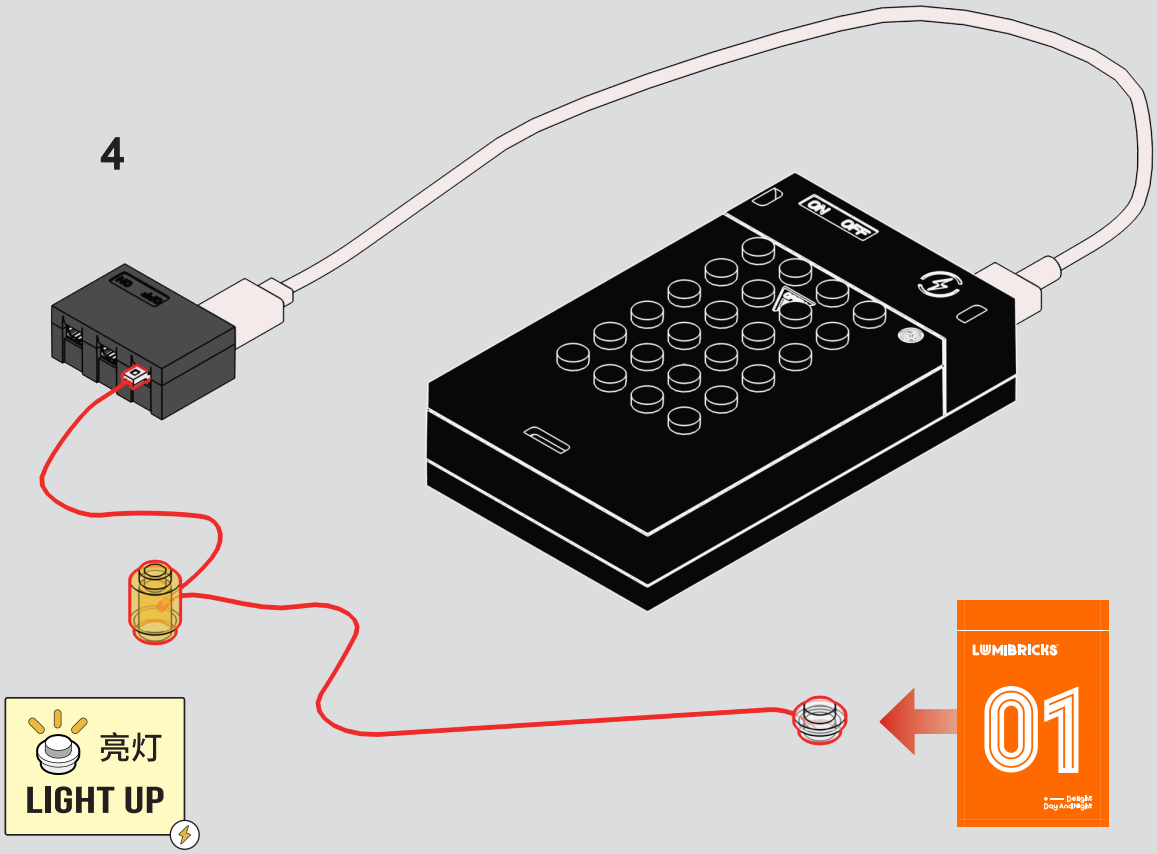

5

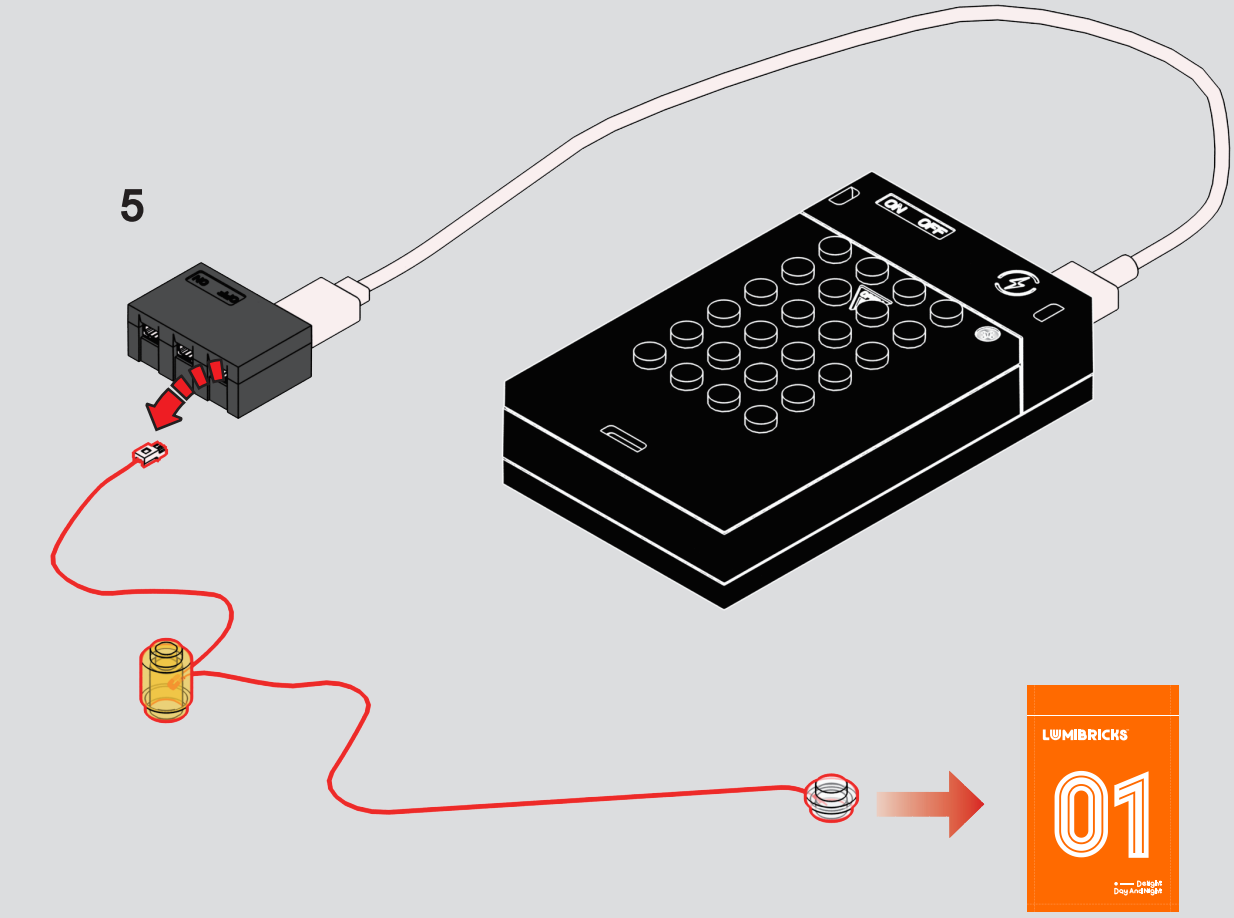

6

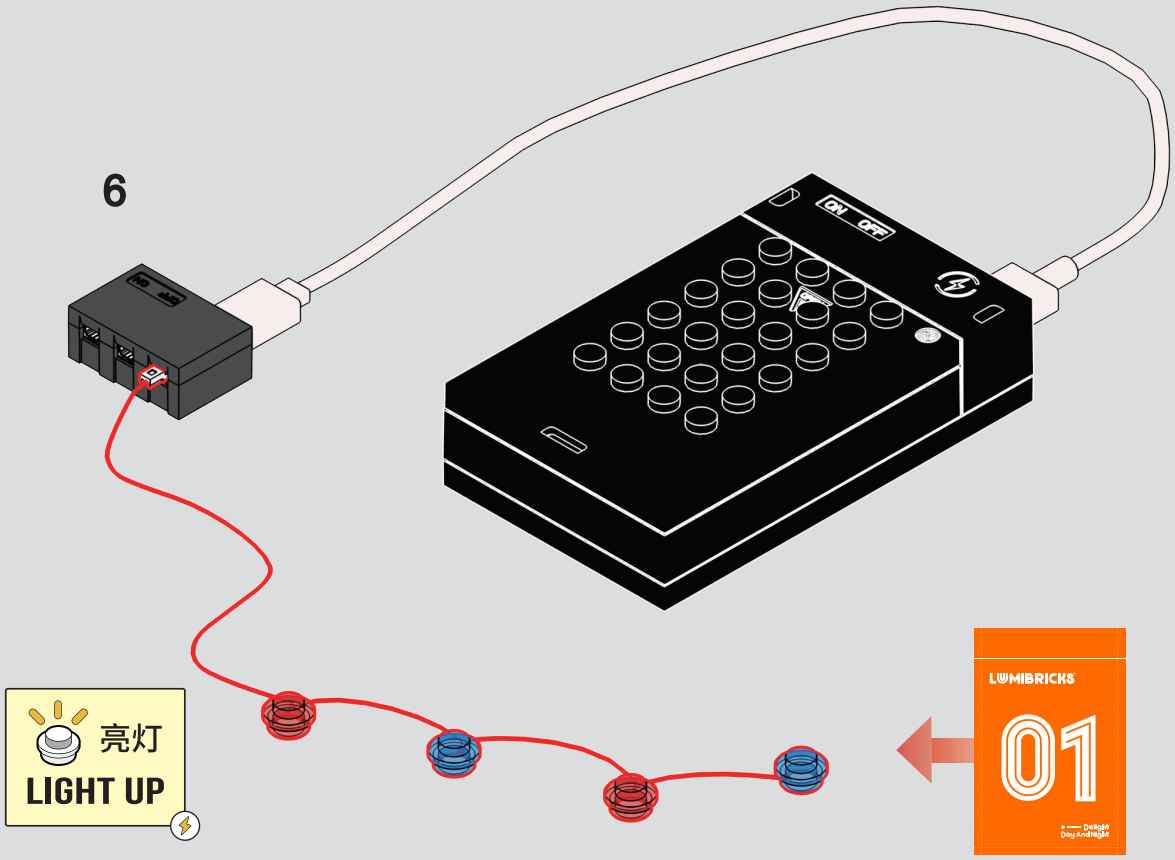

7

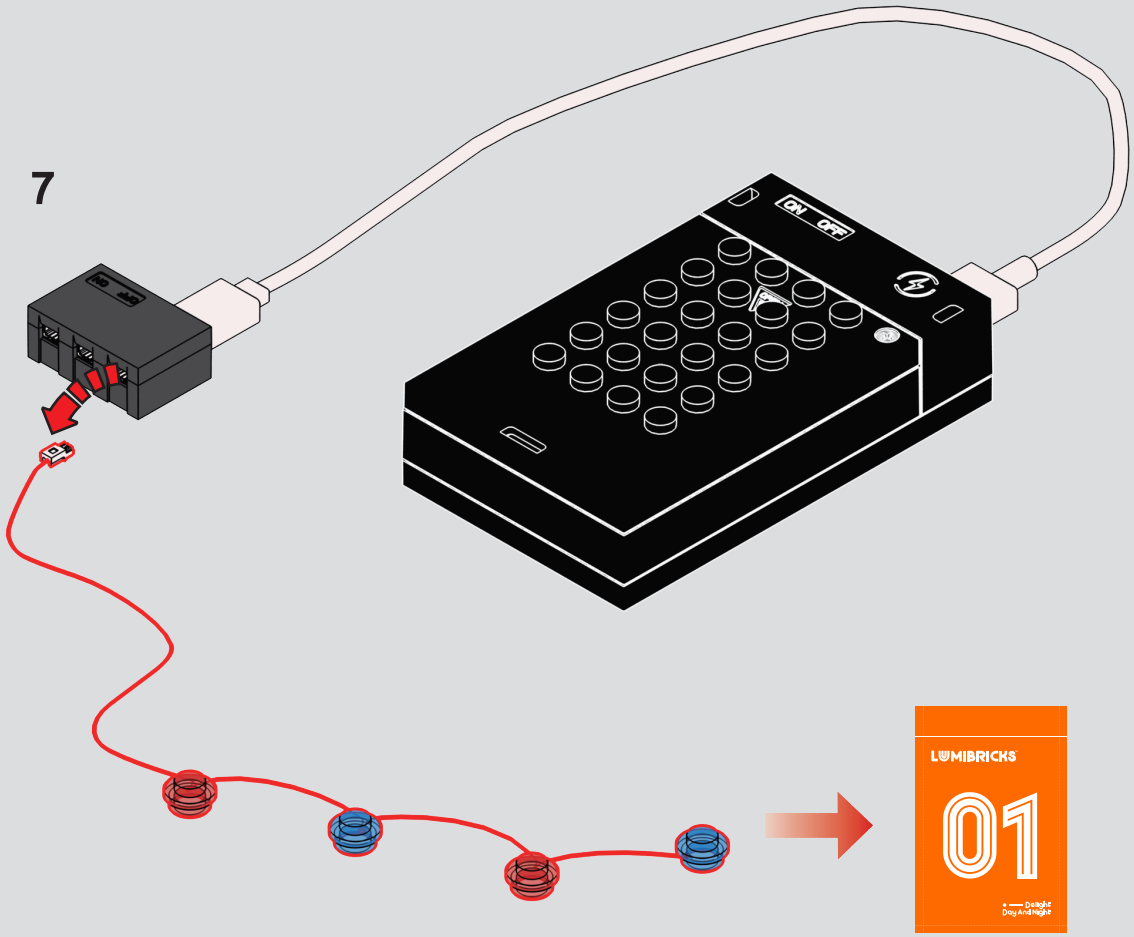

8

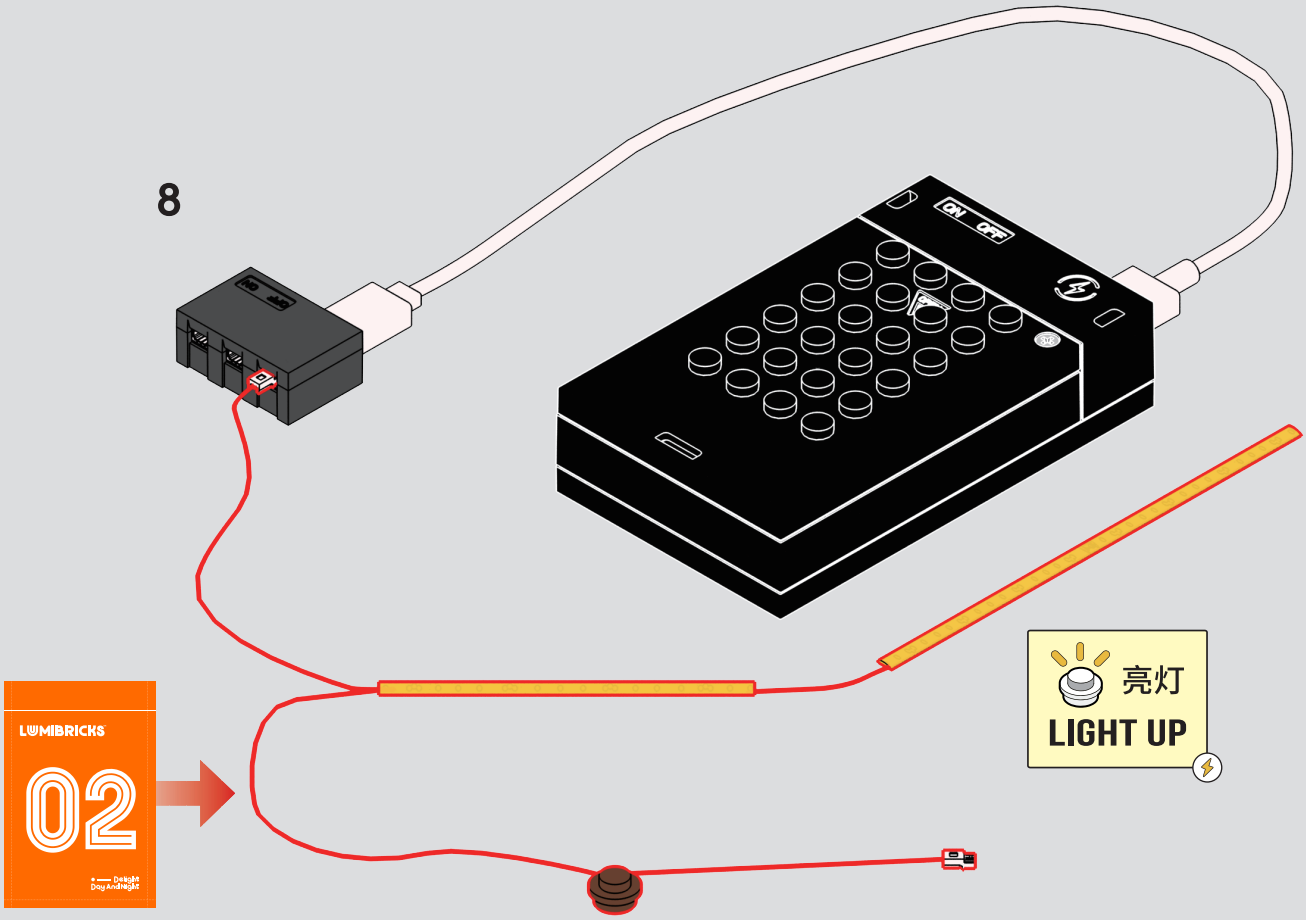

9

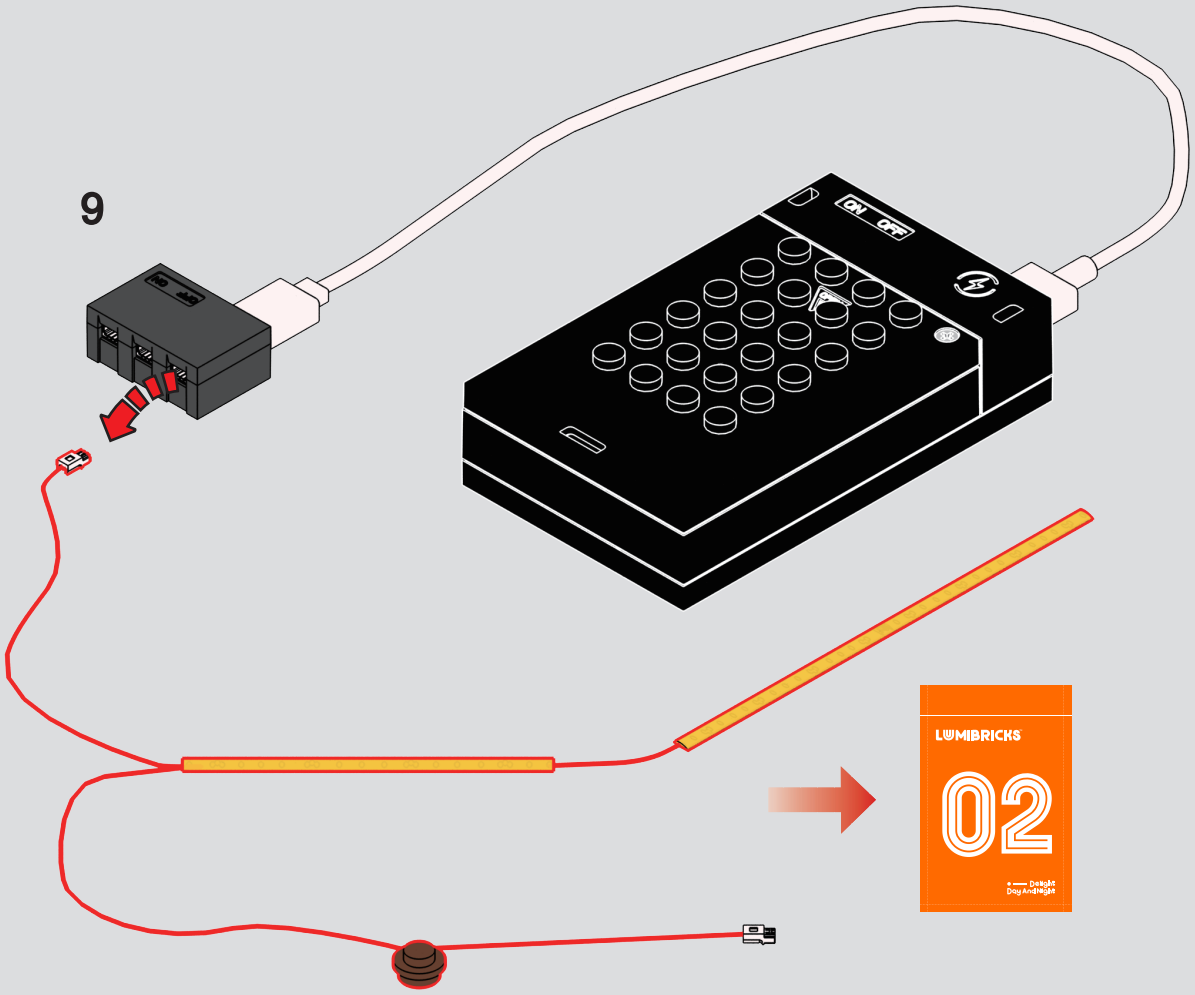

10

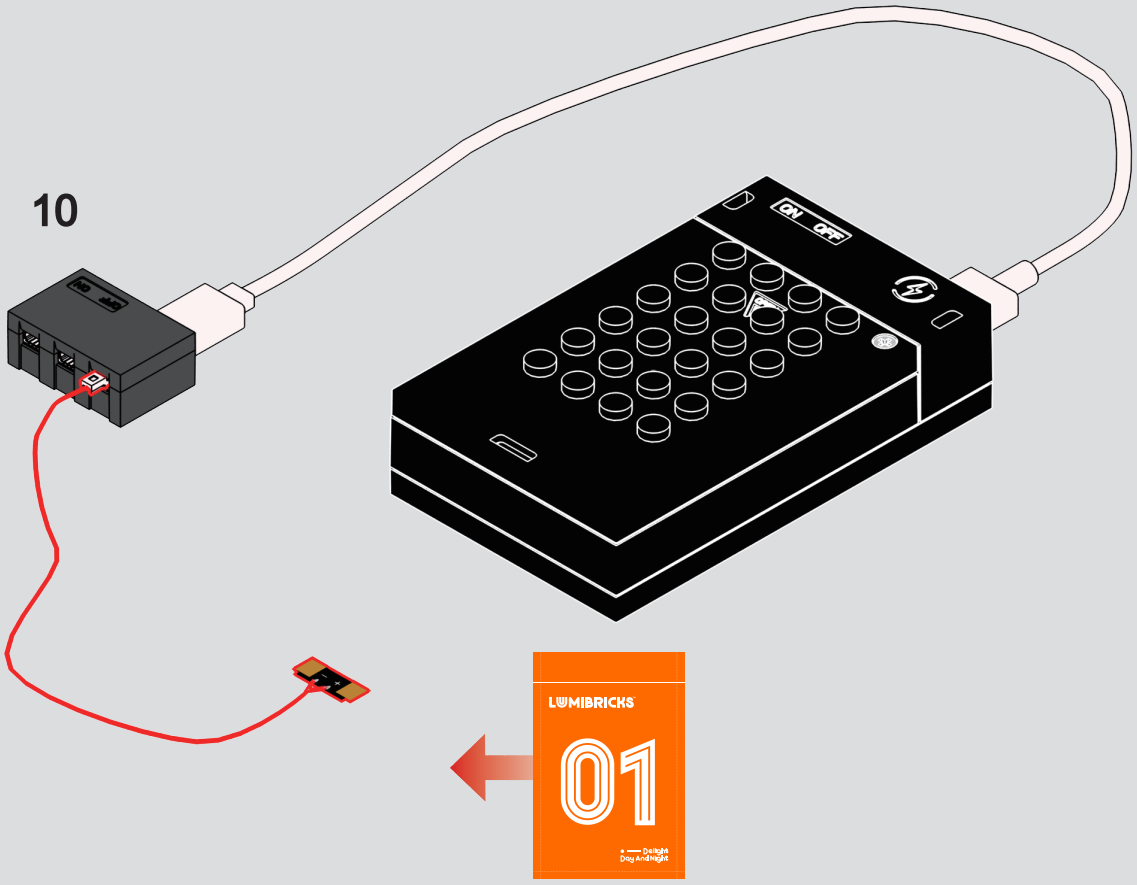

11

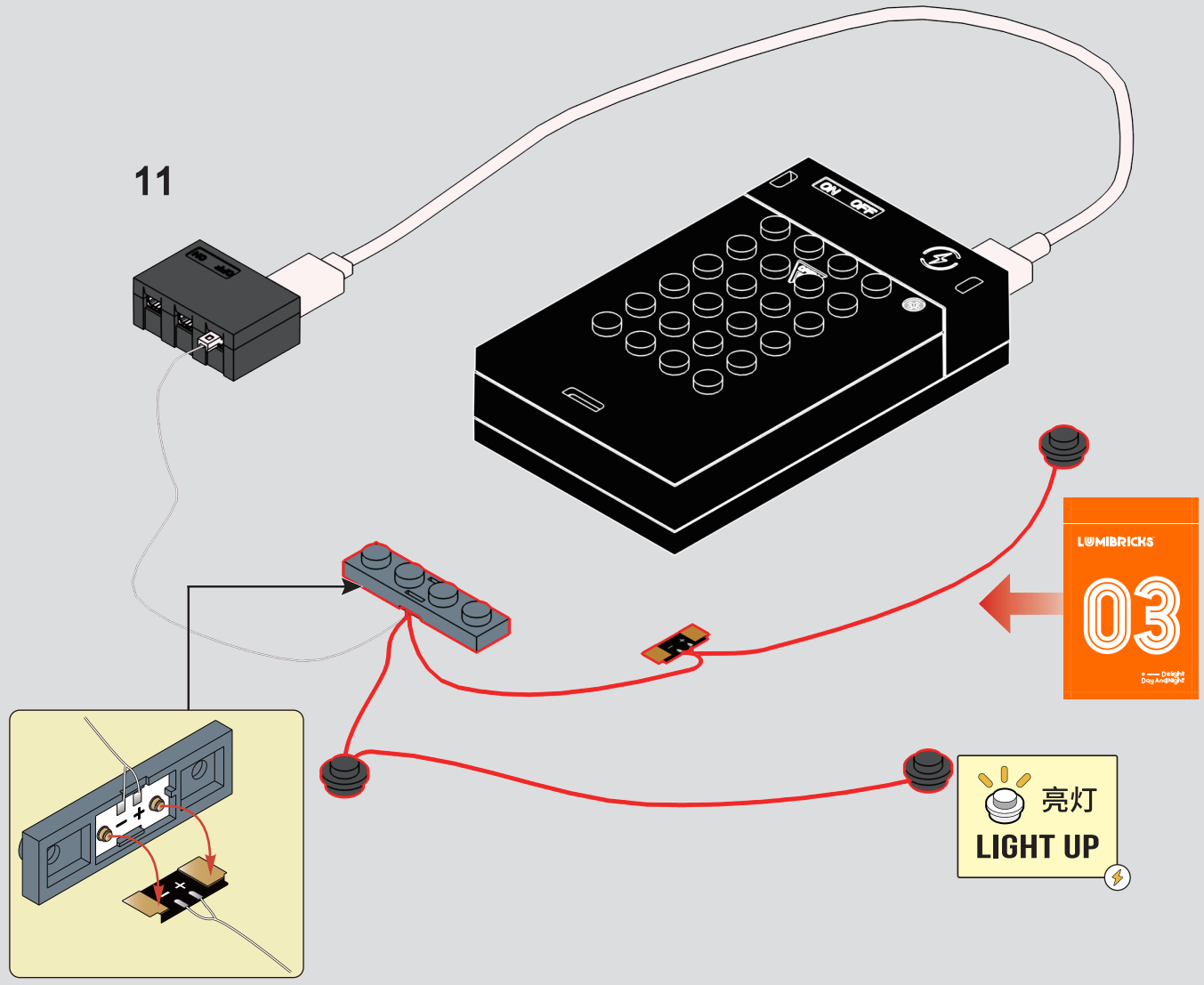

12

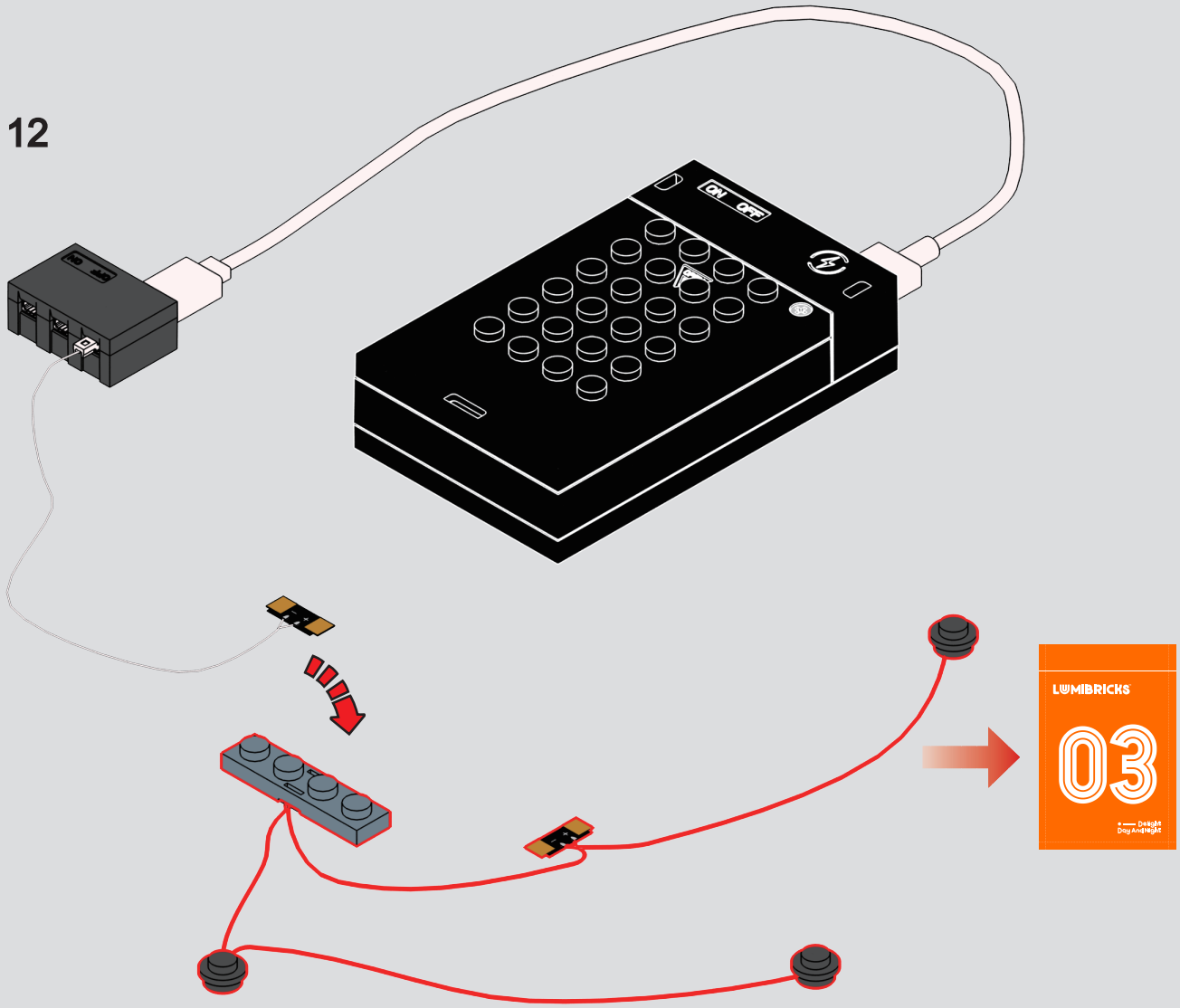
ON OFF
LUMIBRICKS
03
Delight
Day And Night

13

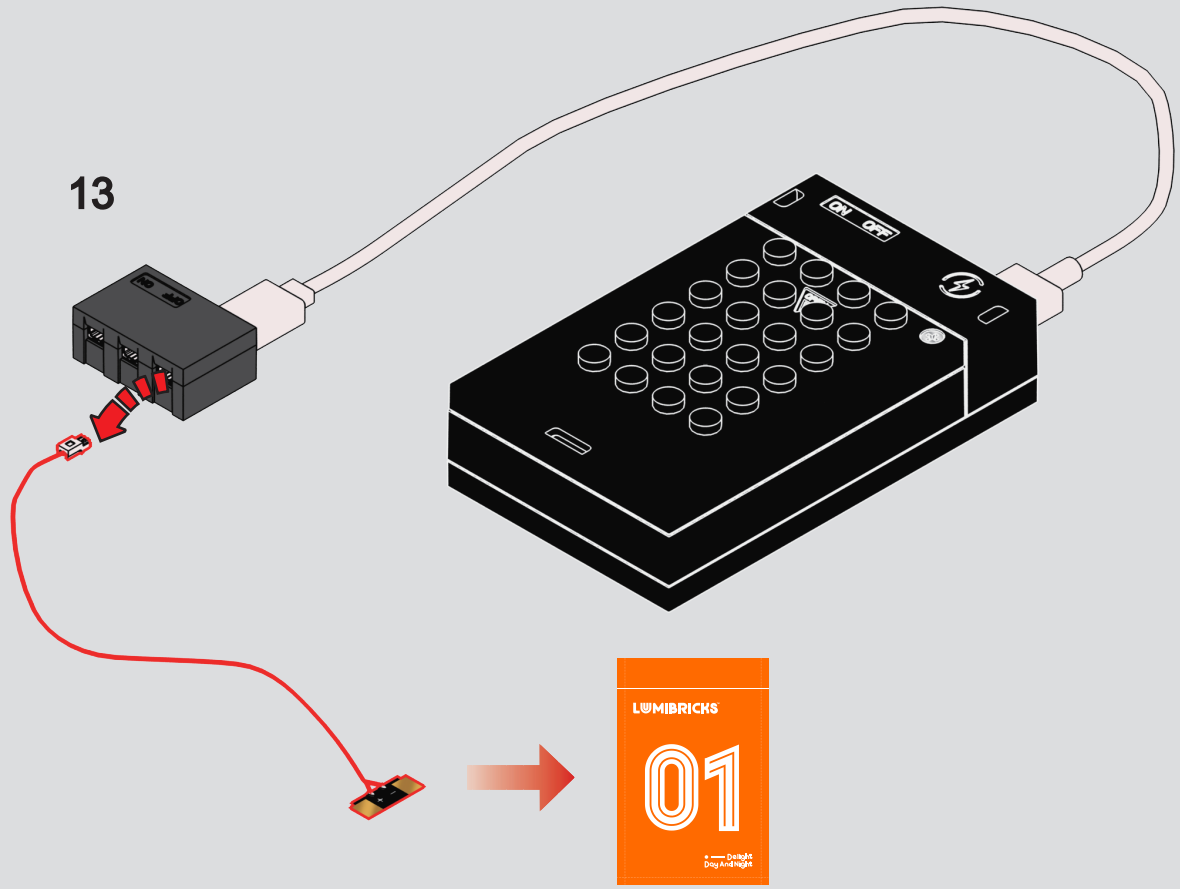
ON OFF
LUMIBRICKS
01
Delight
Day And Night

14

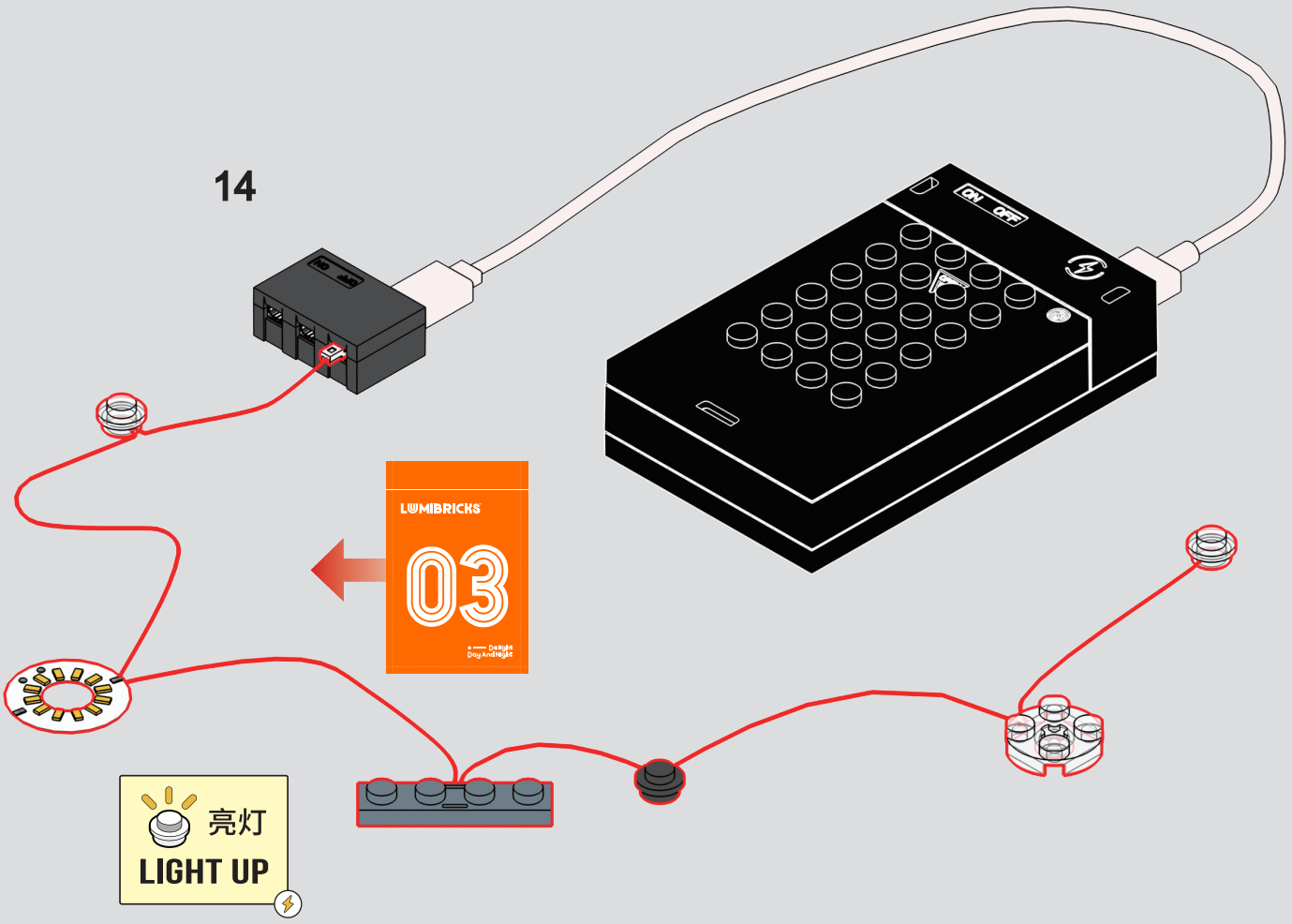
LUMIBRICKS
03
Daylight
Day And Night
亮灯
LIGHT UP

15

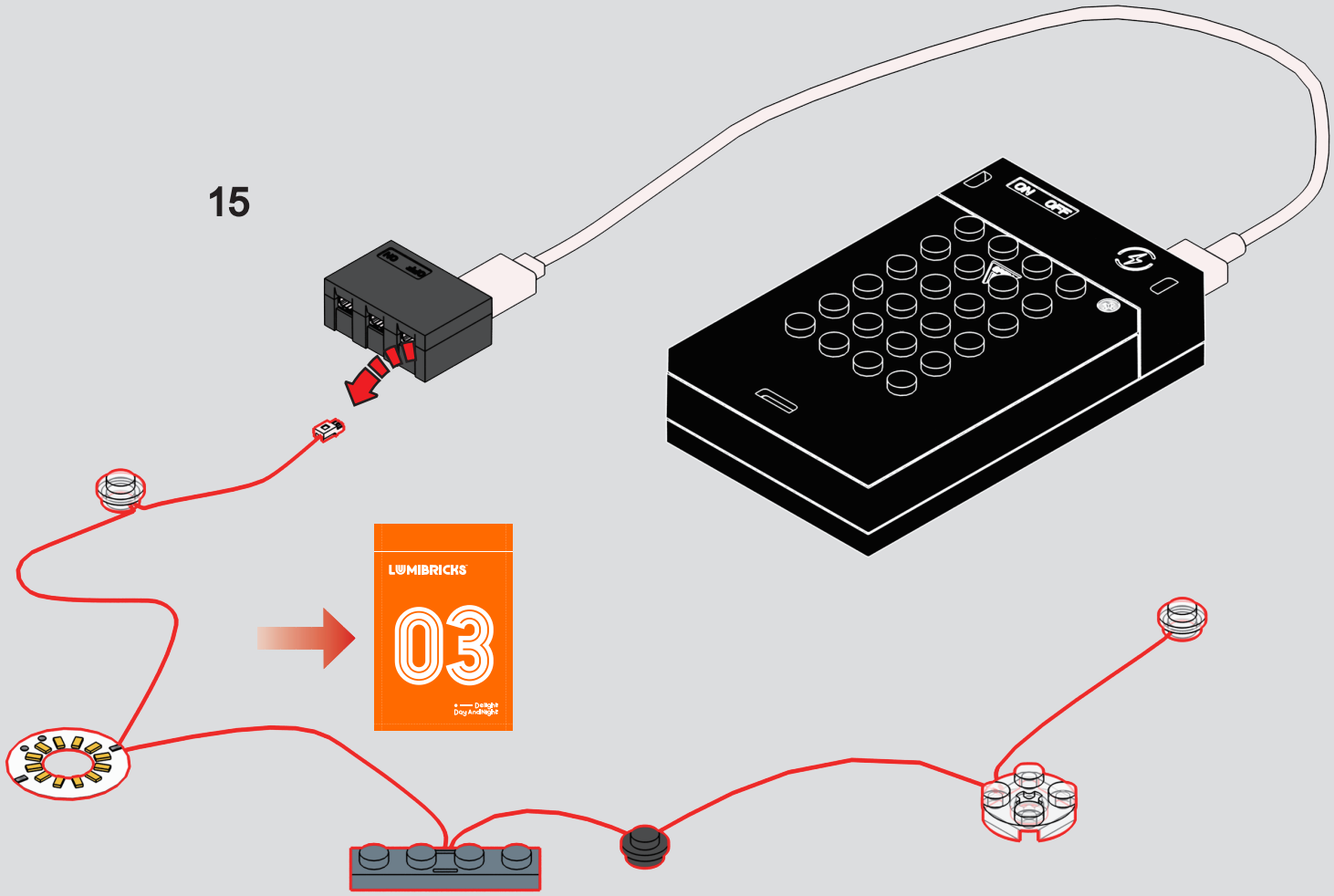
LUMIBRICKS
03
Daylight
Day And Night

16

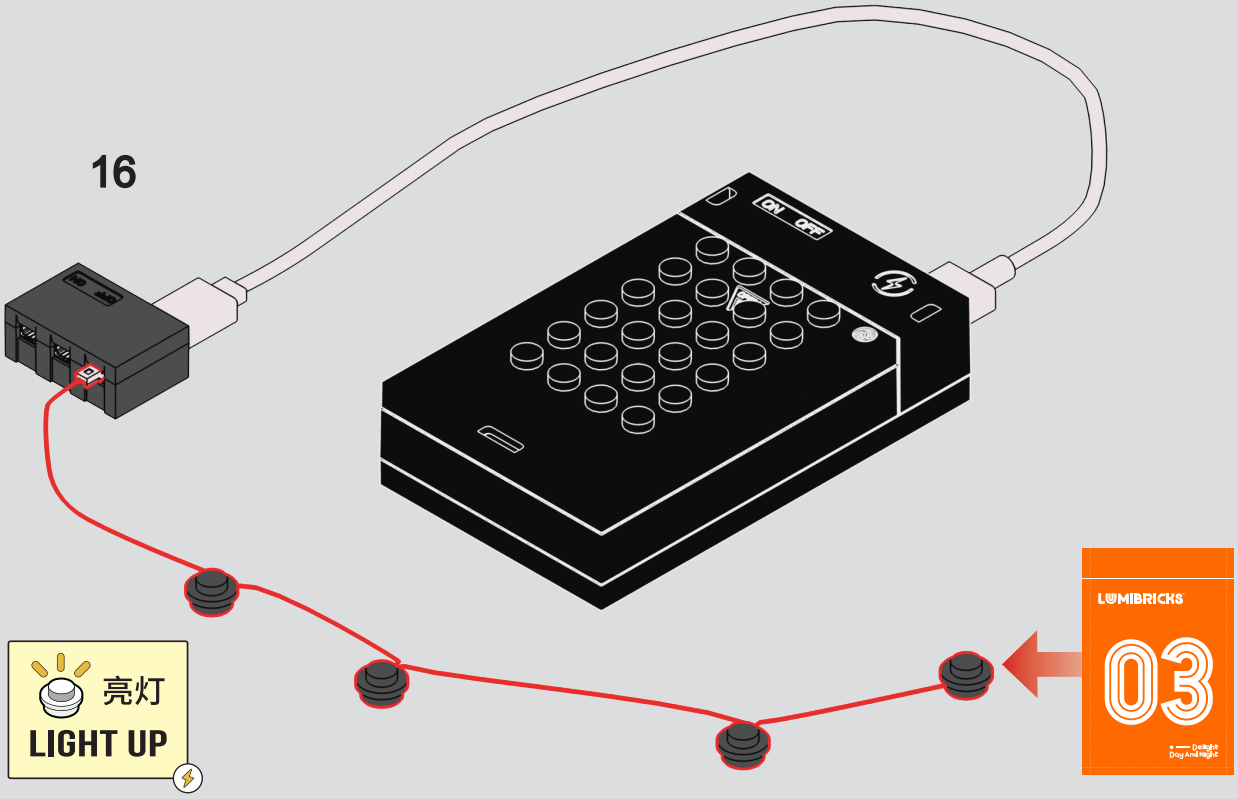
ON OFF
LUMIBRICKS
03
Delight
Day And Night

亮灯
LIGHT UP

17

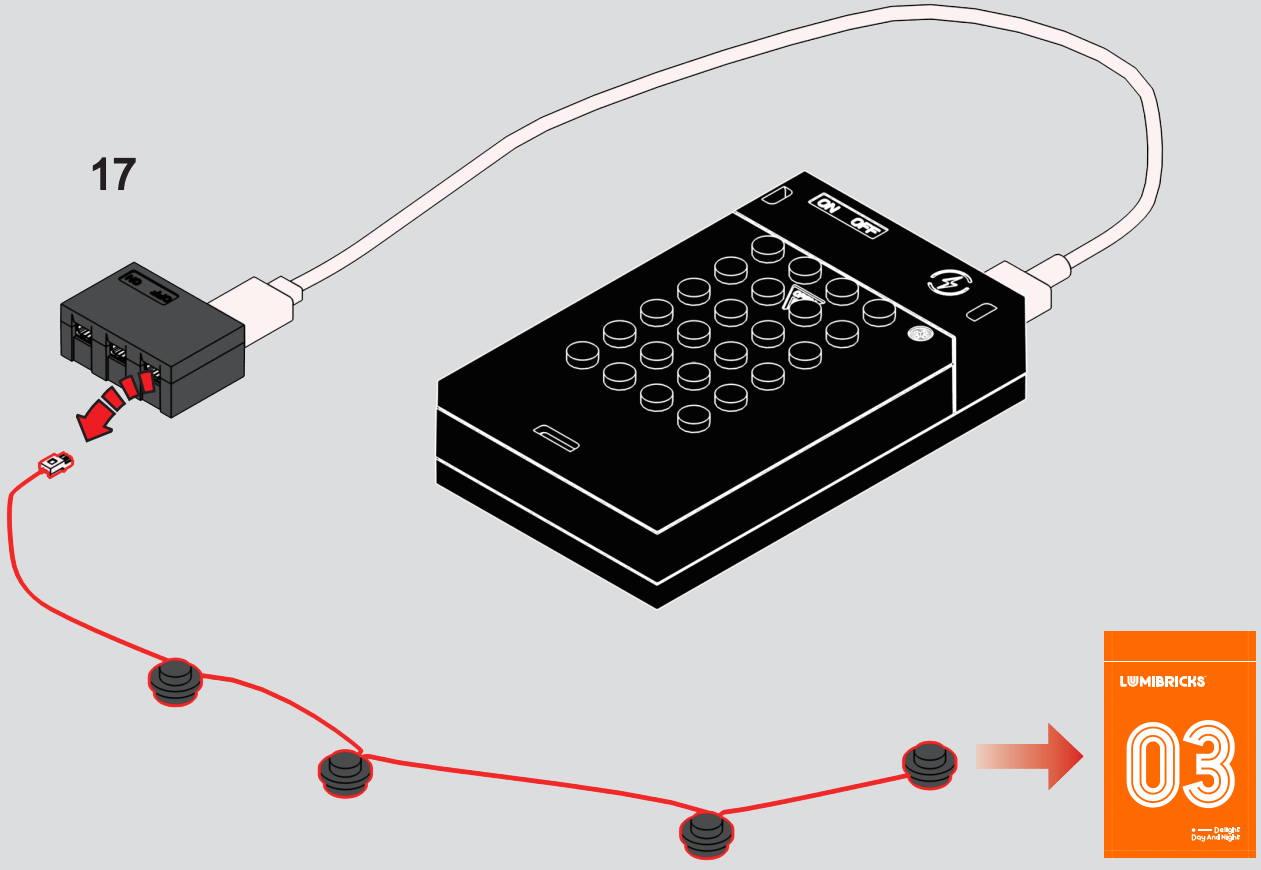
ON OFF
LUMIBRICKS
03
Delight
Day And Night

18

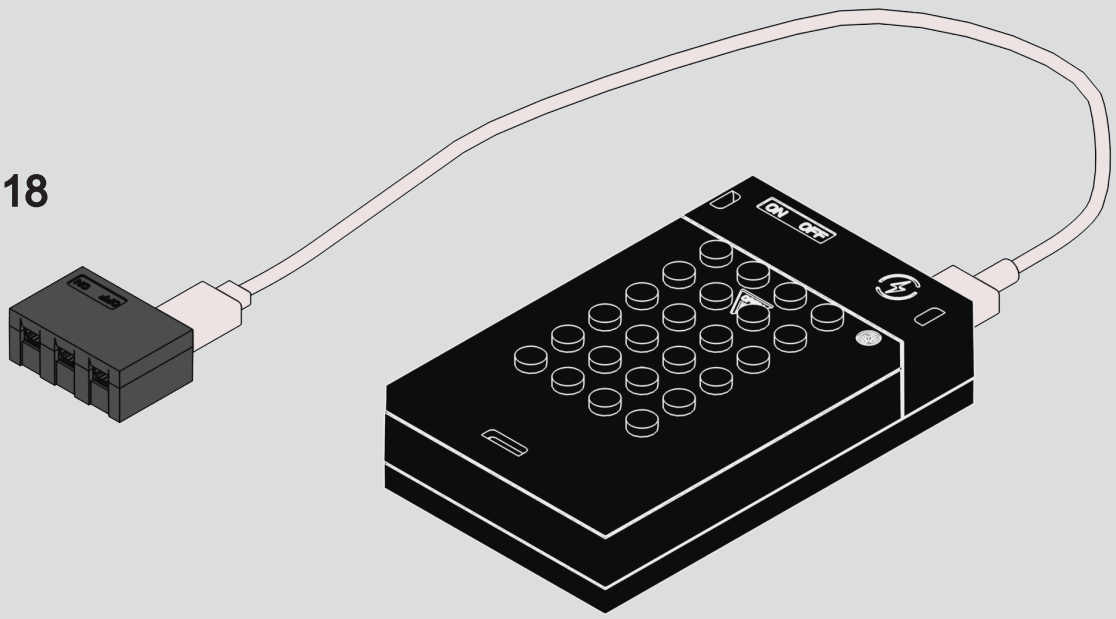

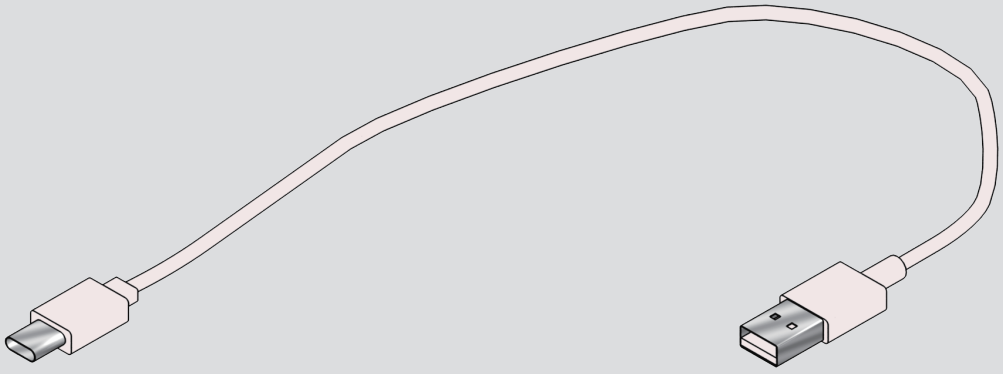

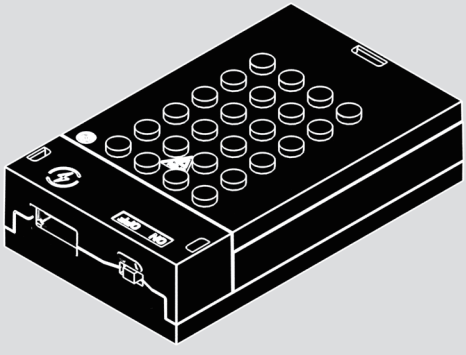

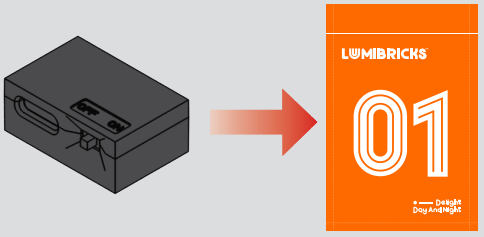



ZH F包含有两部分：人仔零件和特殊零件。根据后续的指引组装人仔。将特殊零件保留好，以便后续使用。

EN The F-pack contains two parts: minifigure bricks and special bricks. Assemble the minifigure according to the following instructions. Keep the special bricks for later use.

FR Le F-pack se compose de deux parties : des briques de minifigurine et des briques spéciales. Assemblez la minifigurine en suivant les instructions ultérieures. Conservez les briques spéciales pour une utilisation future.

DE Das F-Pack besteht aus zwei Teilen: Minifiguren-Bausteinen und speziellen Bausteinen. Setzen Sie die Minifigur gemäß den weiteren Anweisungen zusammen. Bewahren Sie die speziellen Bausteine für die spätere Verwendung gut auf.

IT Il F-pack è composto da due parti: mattoncini per minifigure e mattoncini speciali. Assembla la minifigure seguendo le istruzioni successive. Conserva i mattoncini speciali per un uso futuro.

ES El F-pack tiene dos partes: ladrillos de minifigura y ladrillos especiales. Ensambla la minifigura siguiendo las instrucciones posteriores. Guarda los ladrillos especiales para usarlos más adelante.

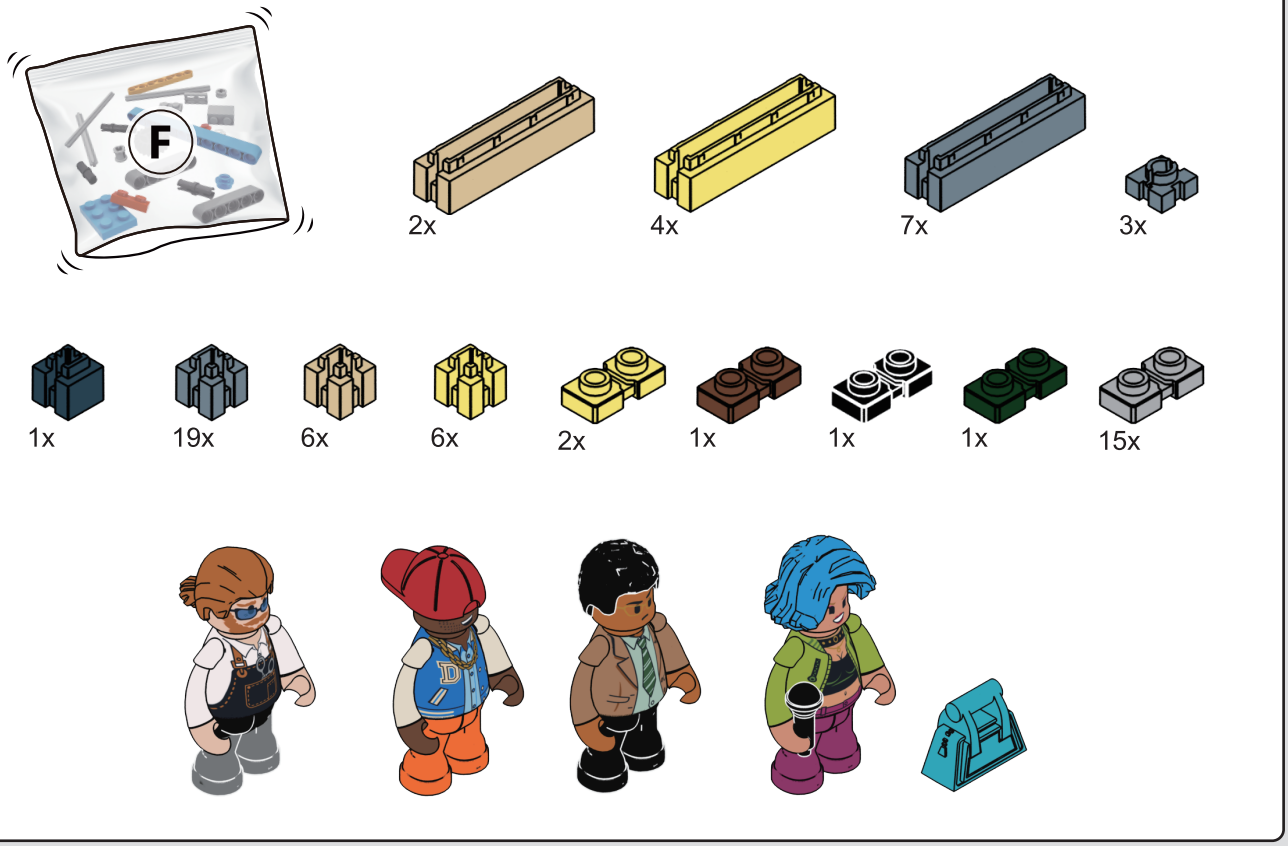

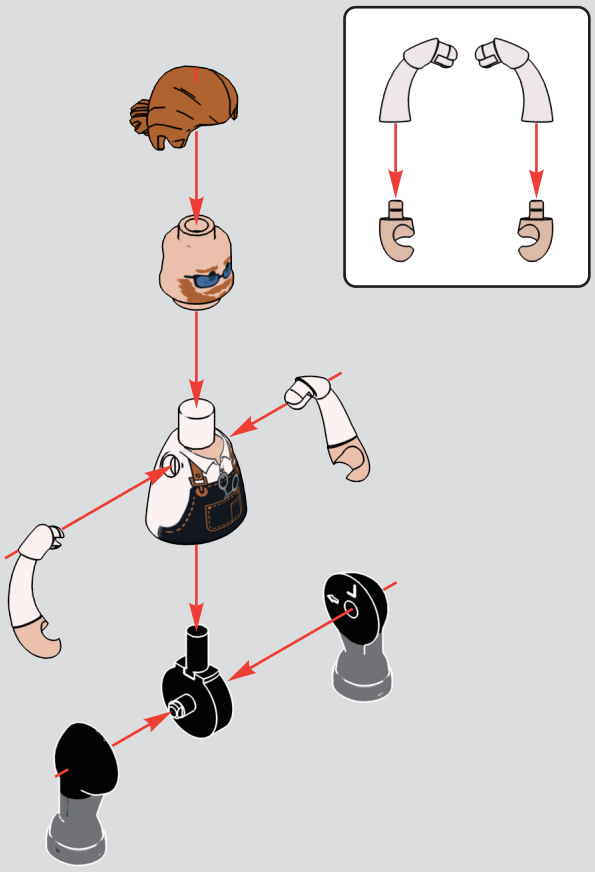

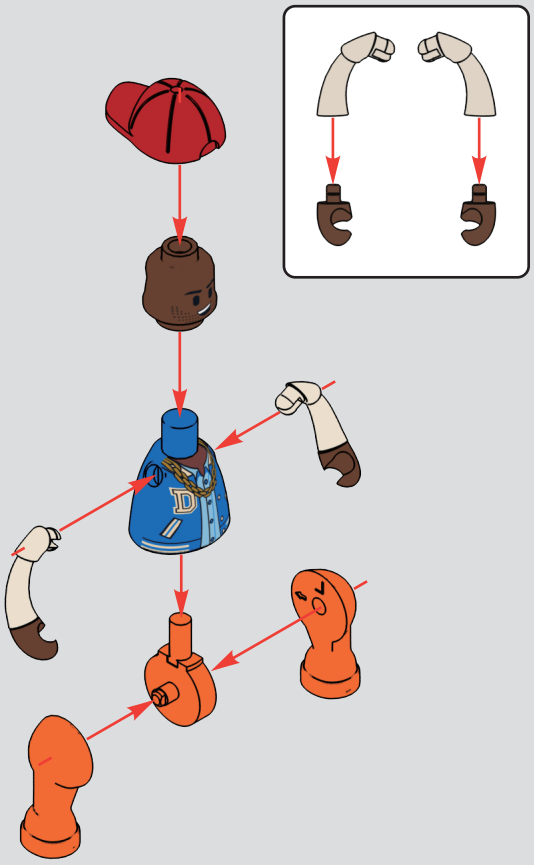

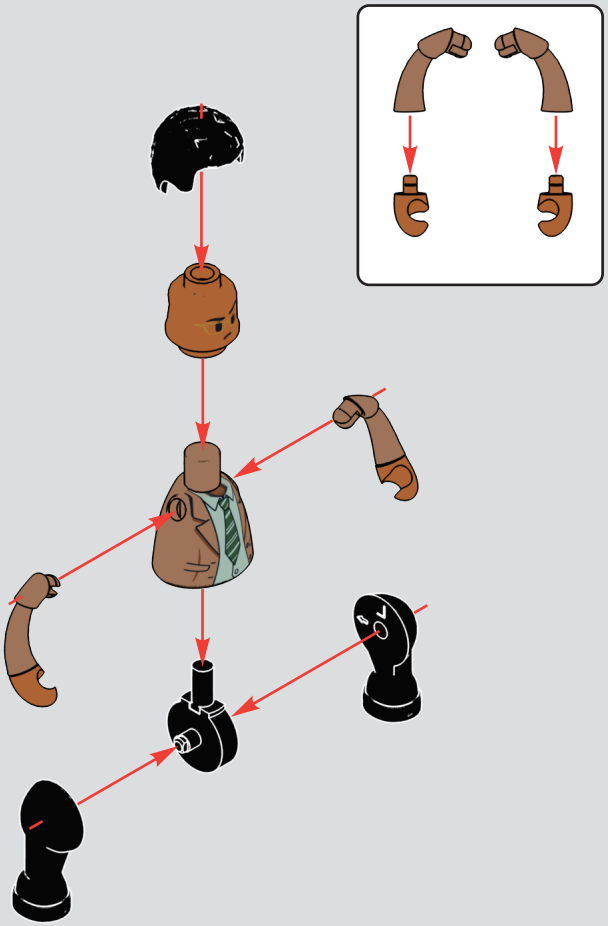

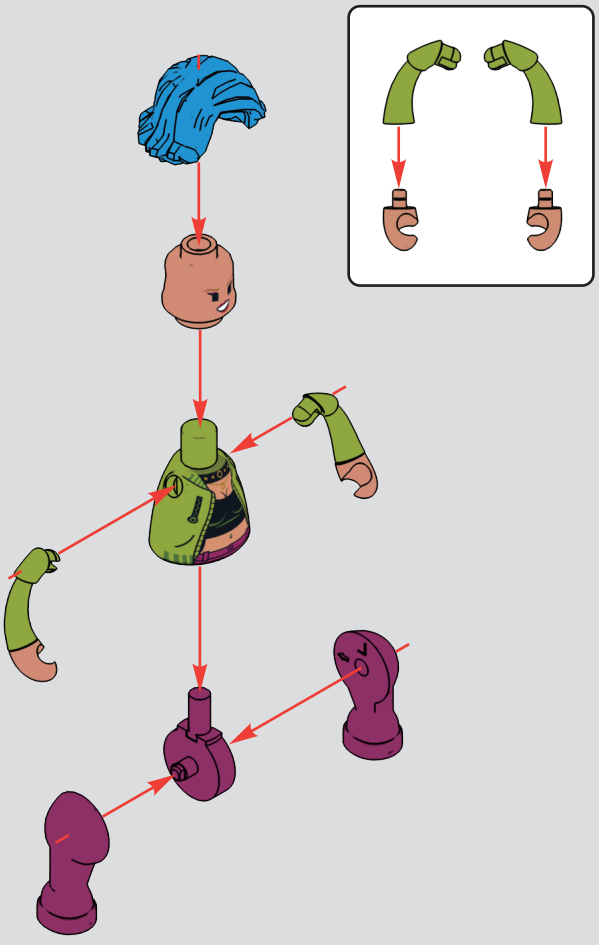

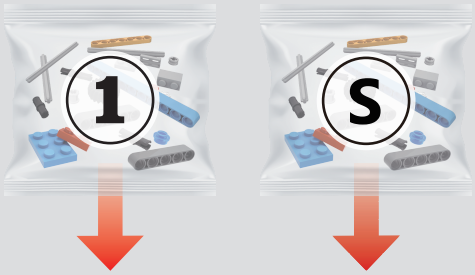

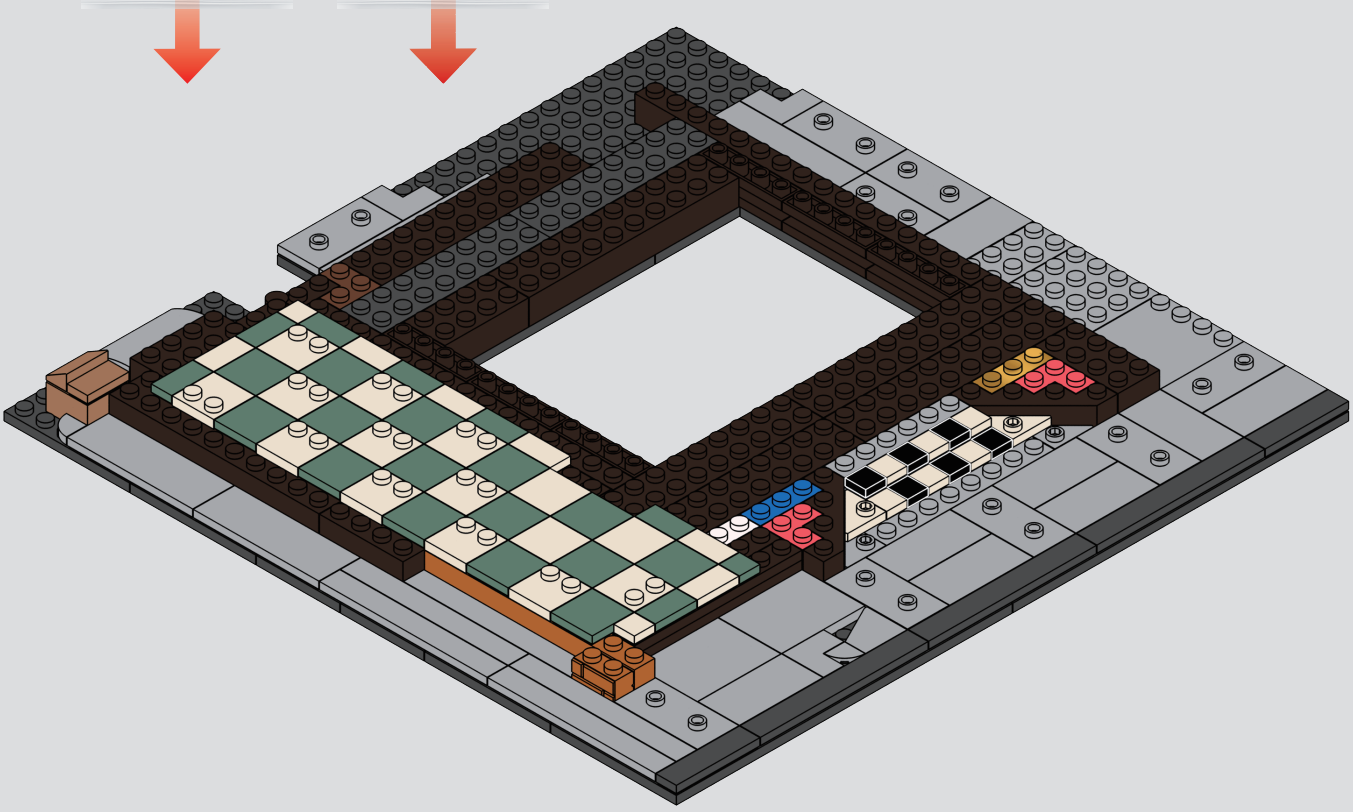

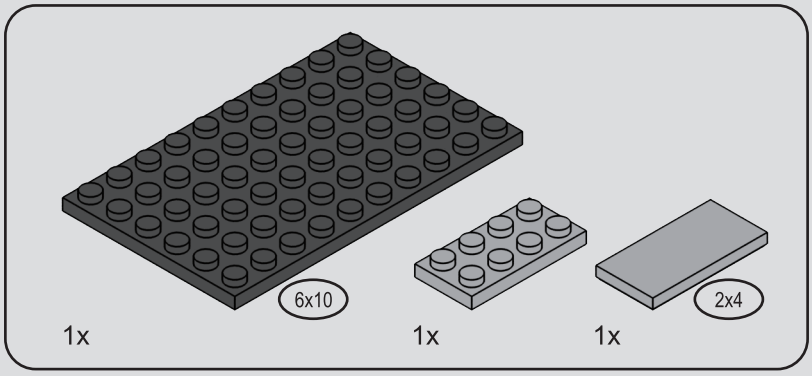

1

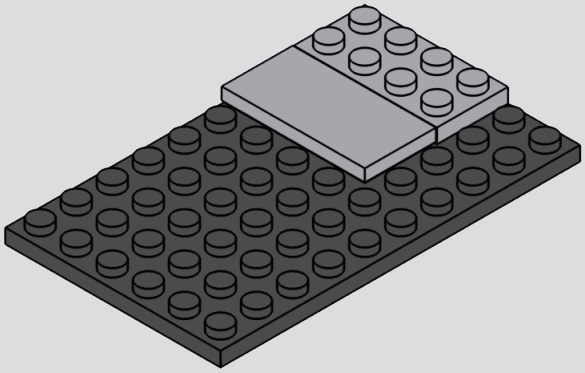

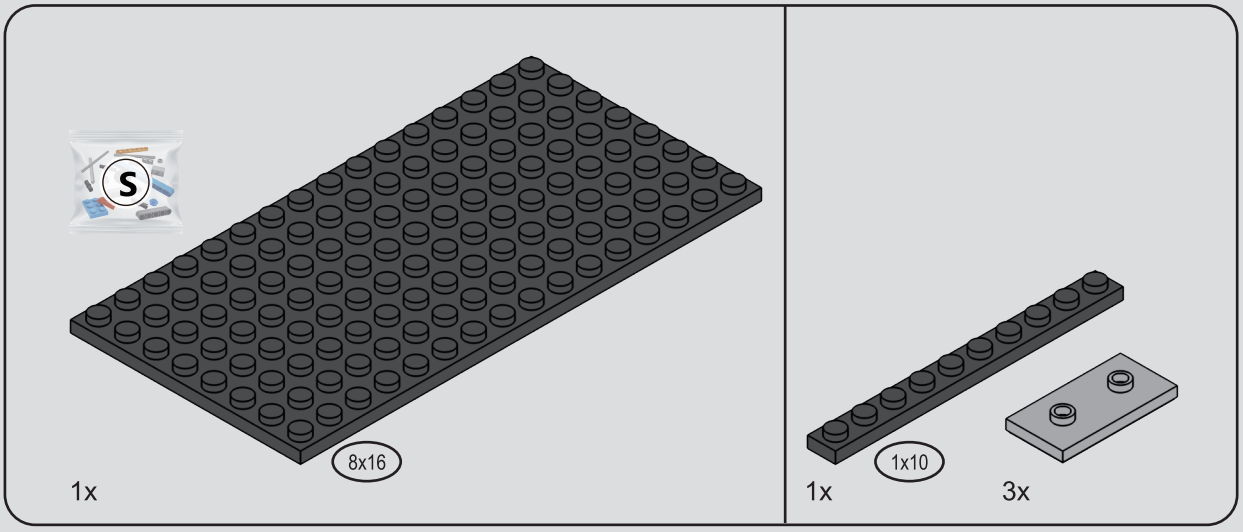

2

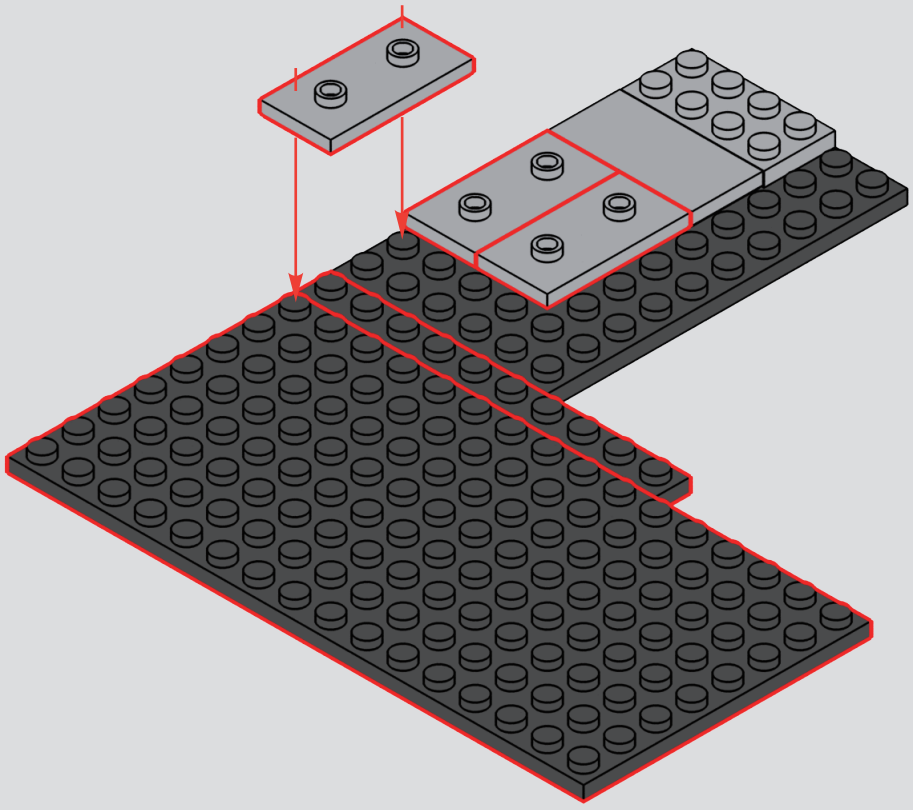

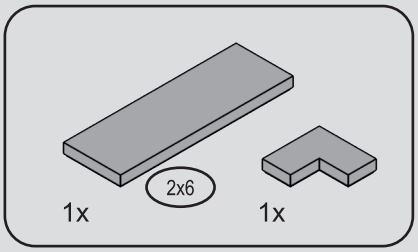

3

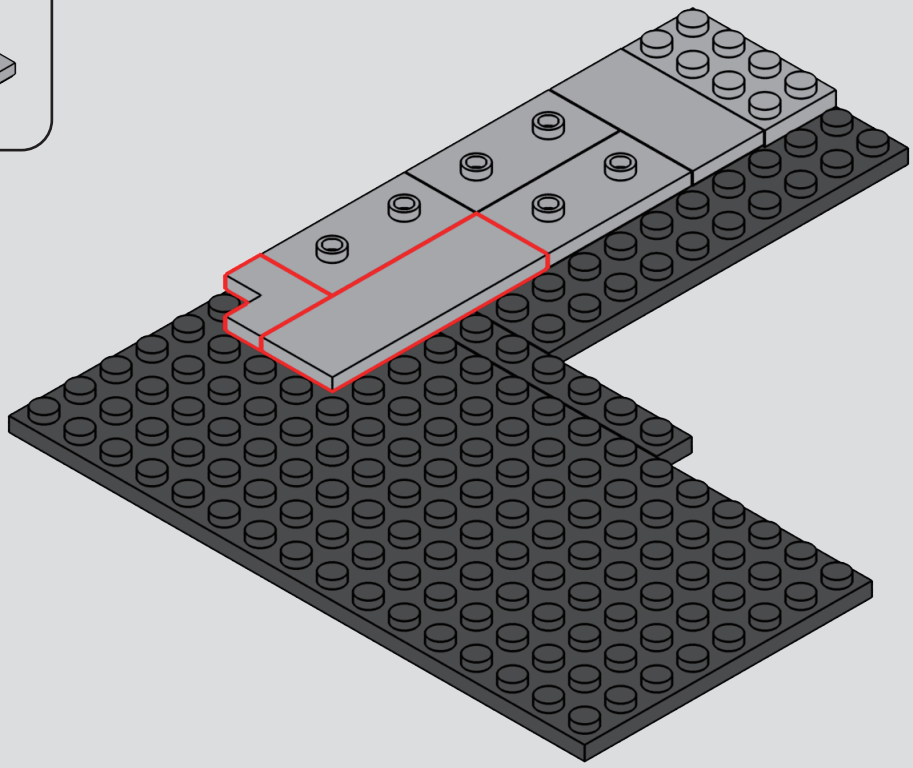

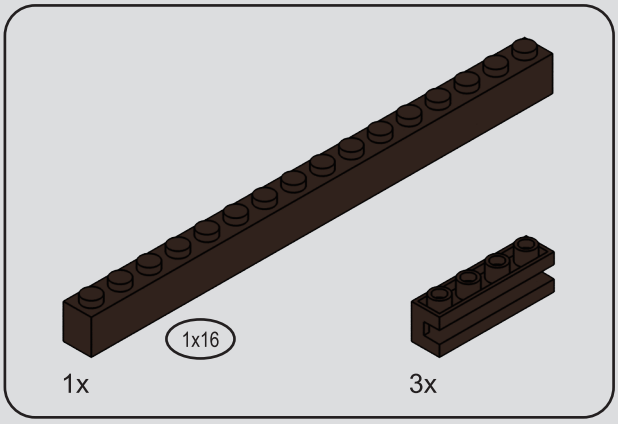

4

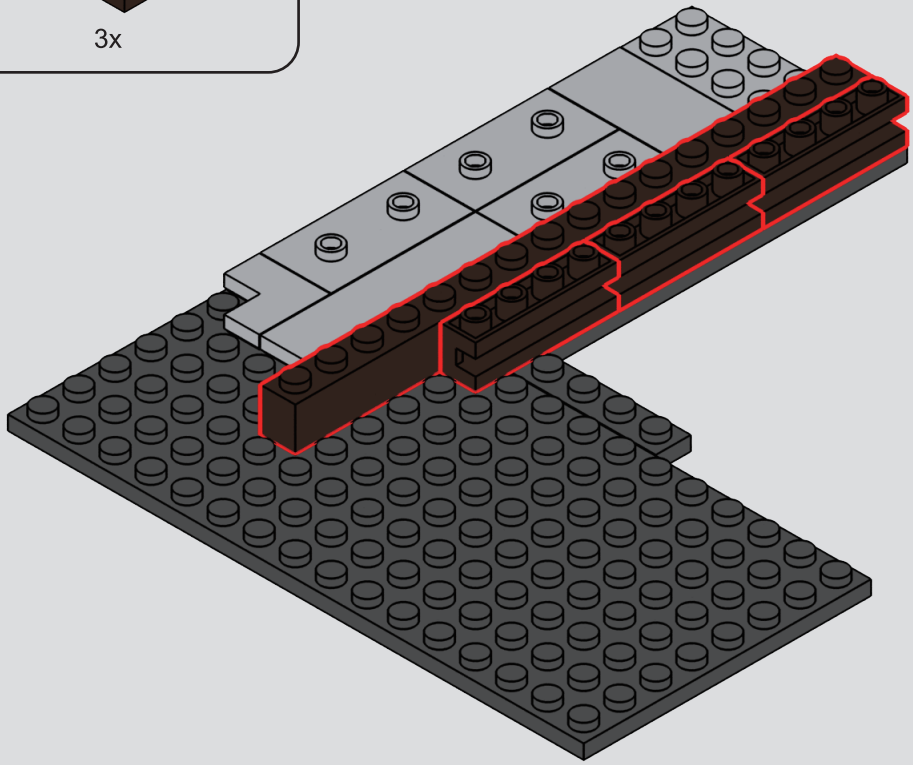

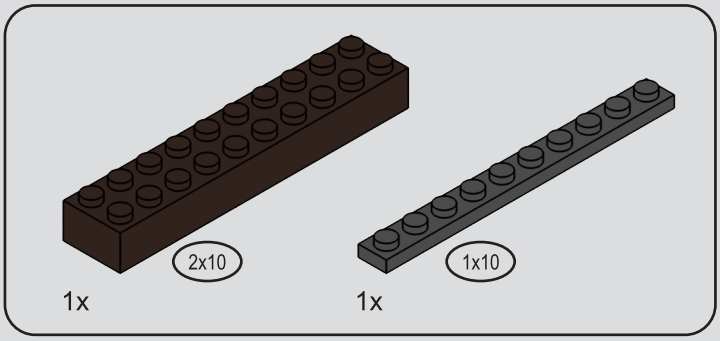

5

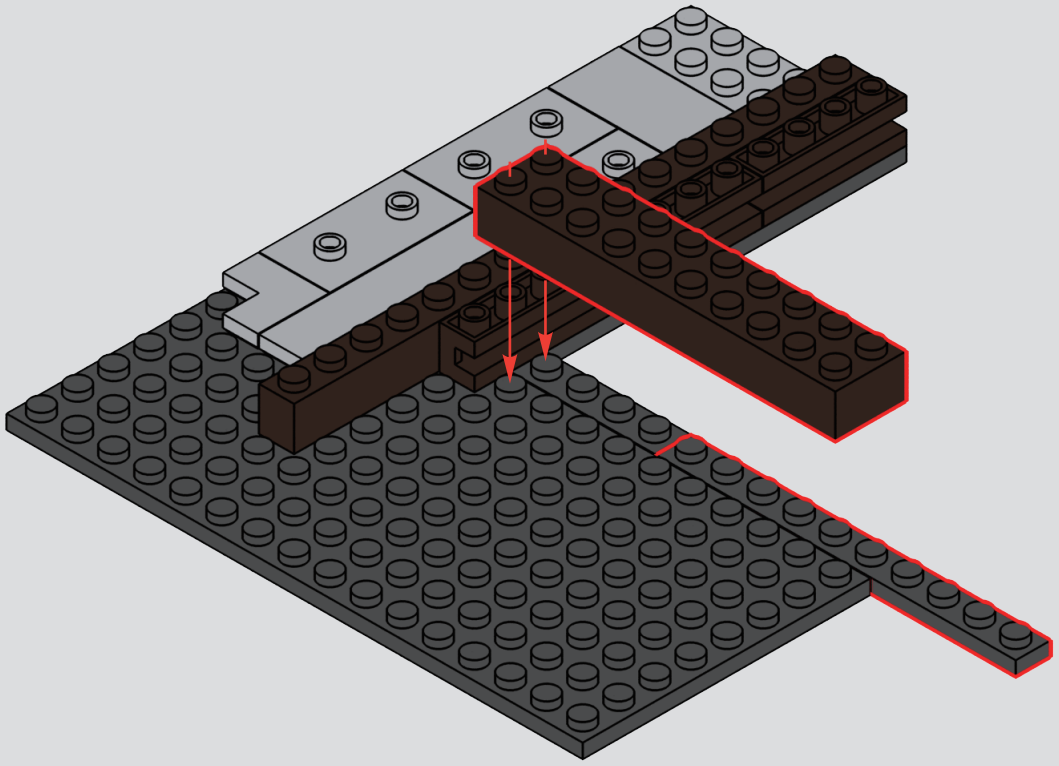

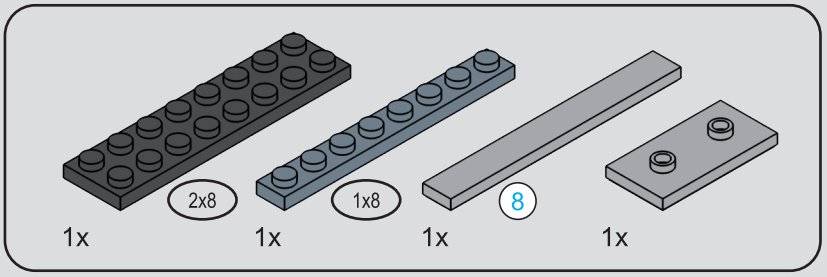

6

1

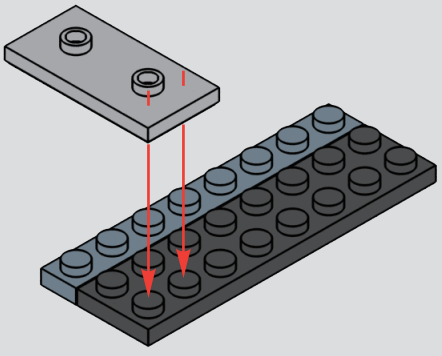

2

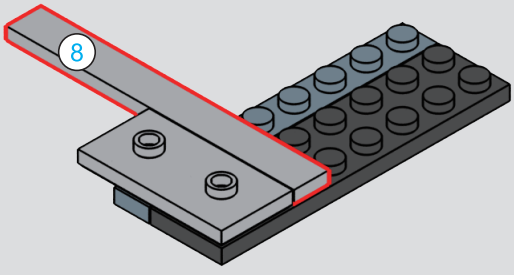



7

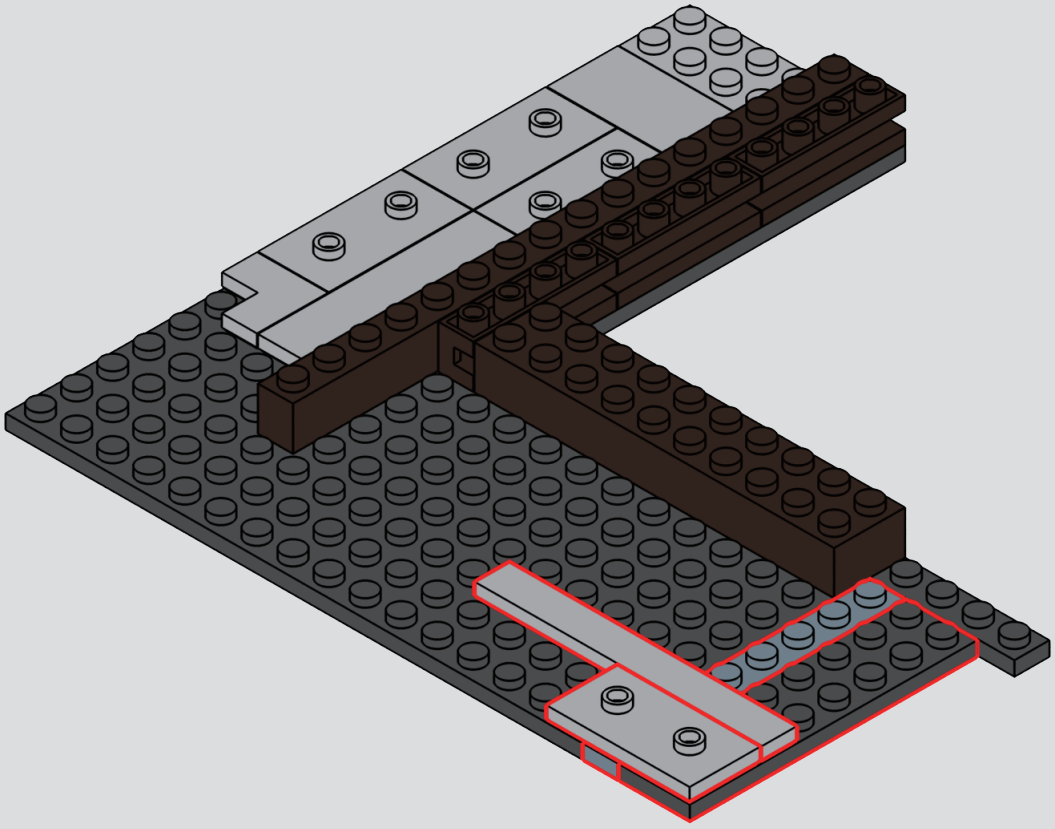

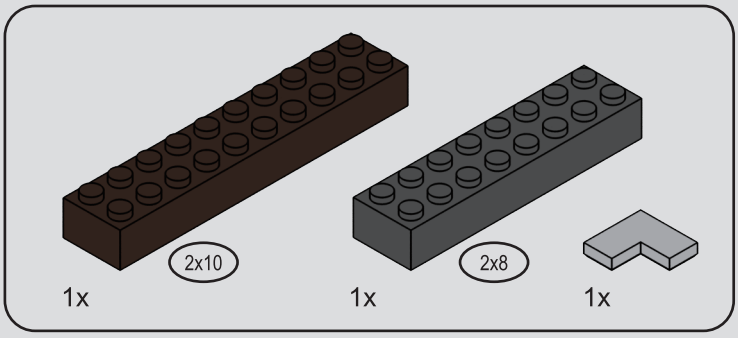

8

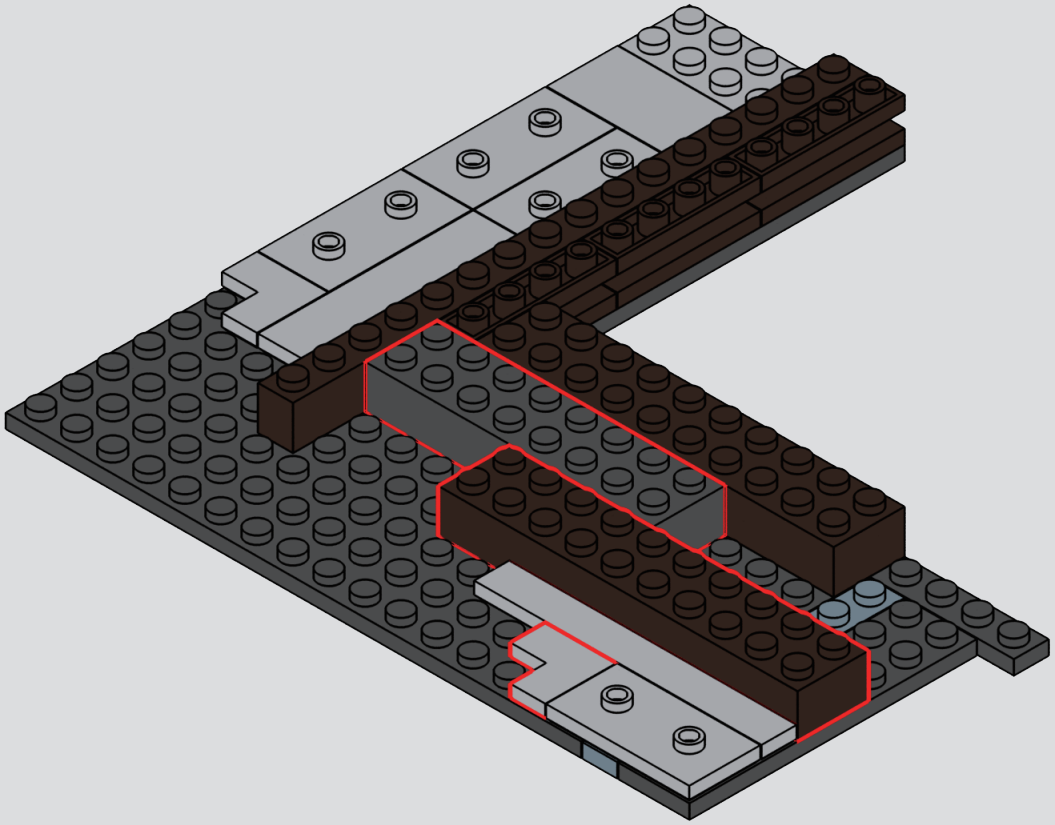

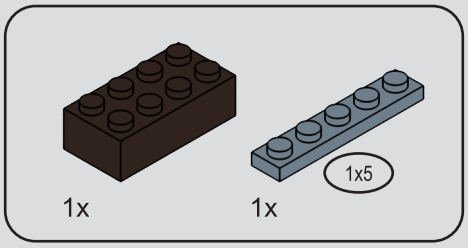

9

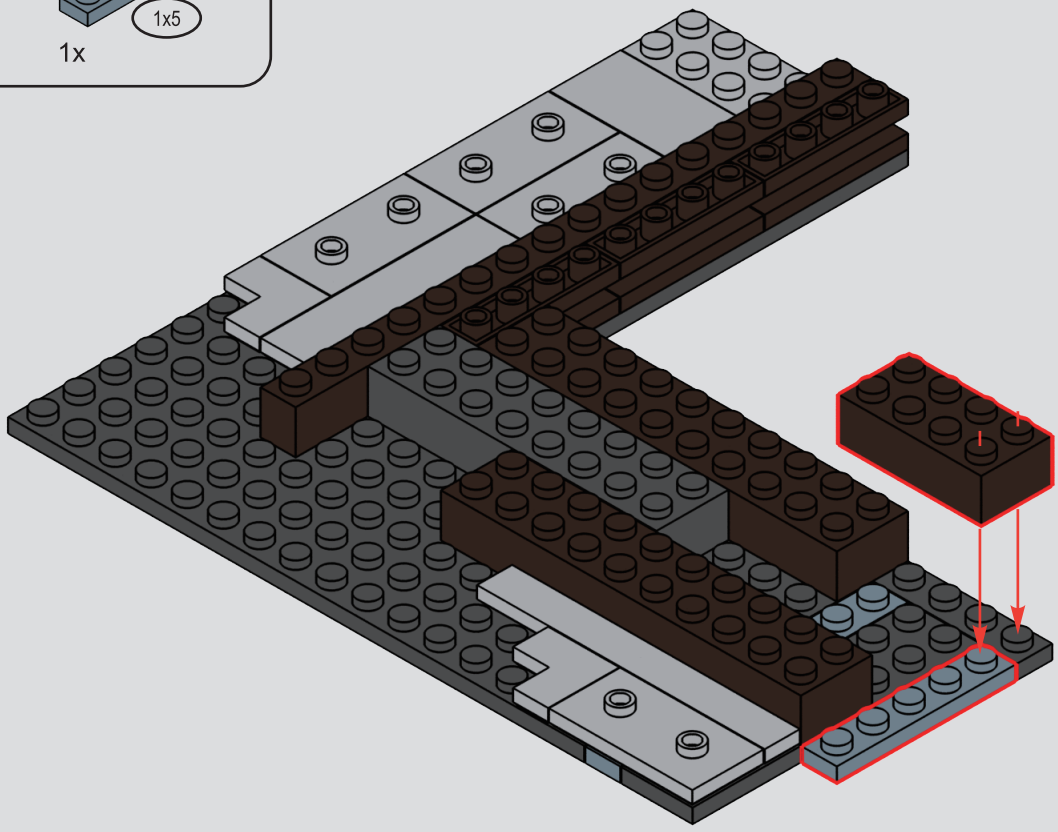

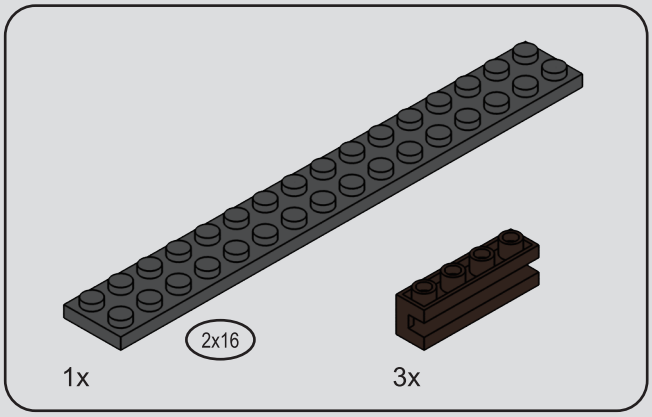

10

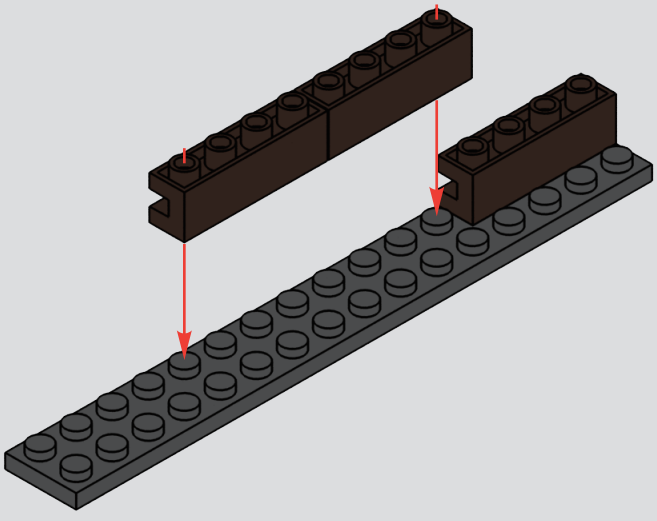

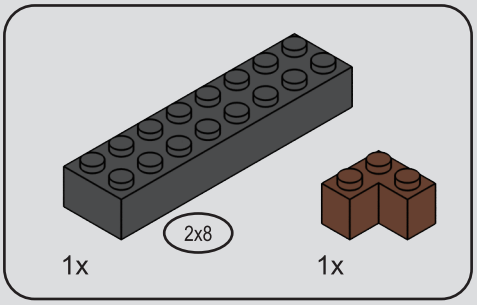

11

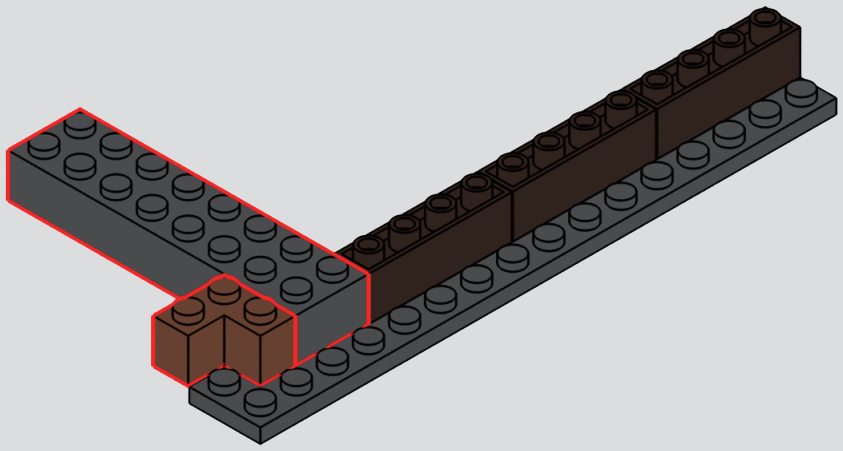

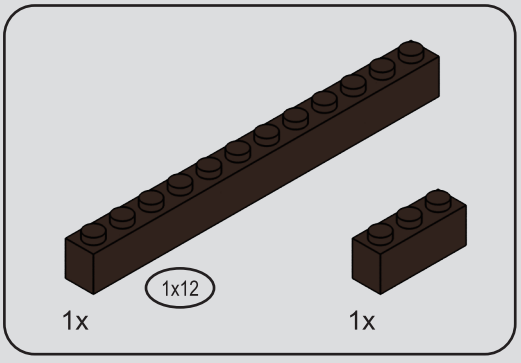

12

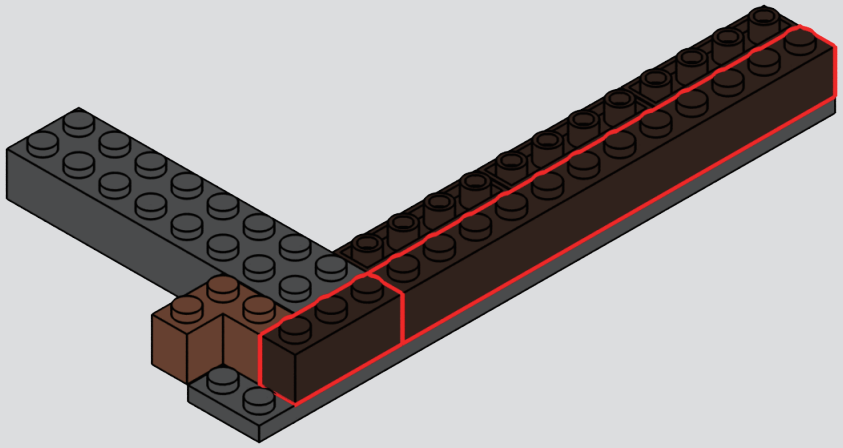

13

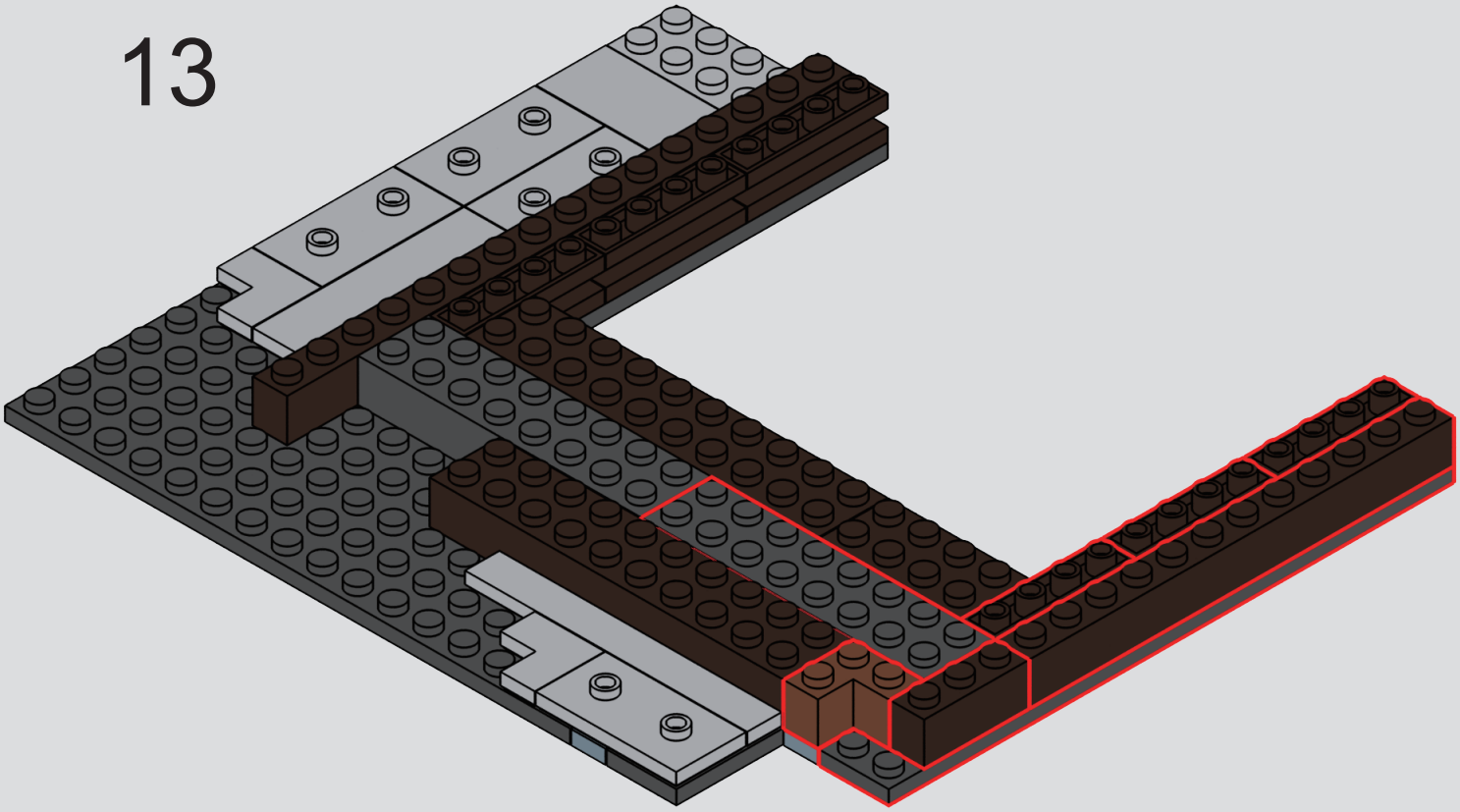

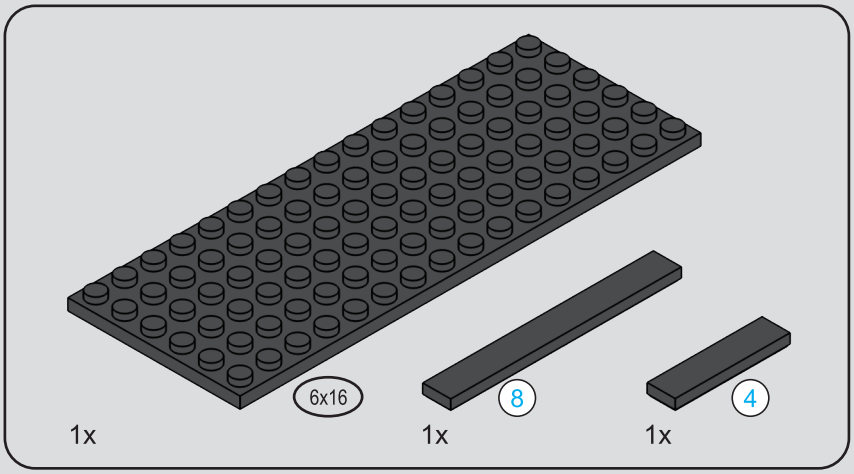

14

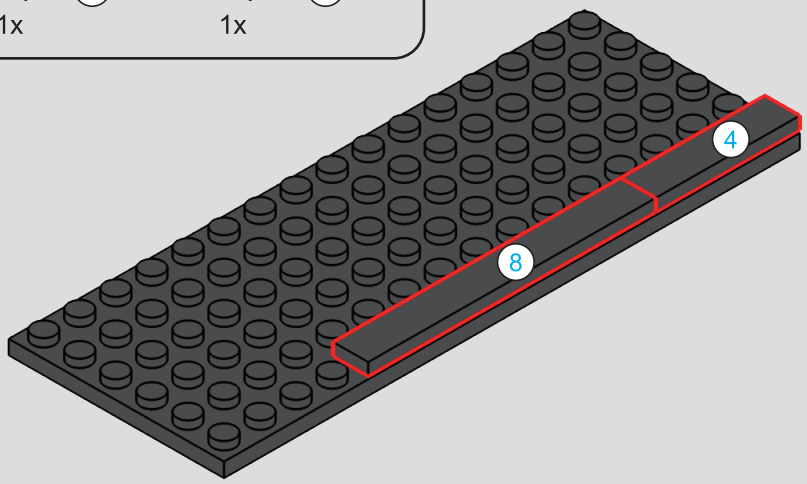





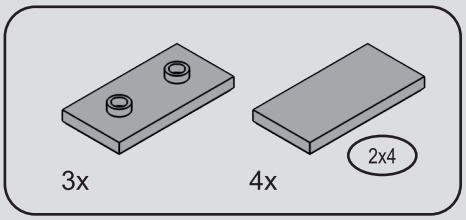

15

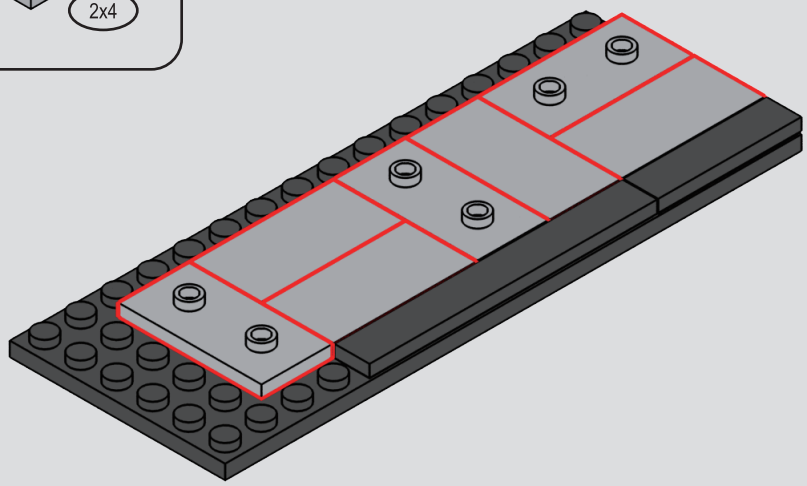

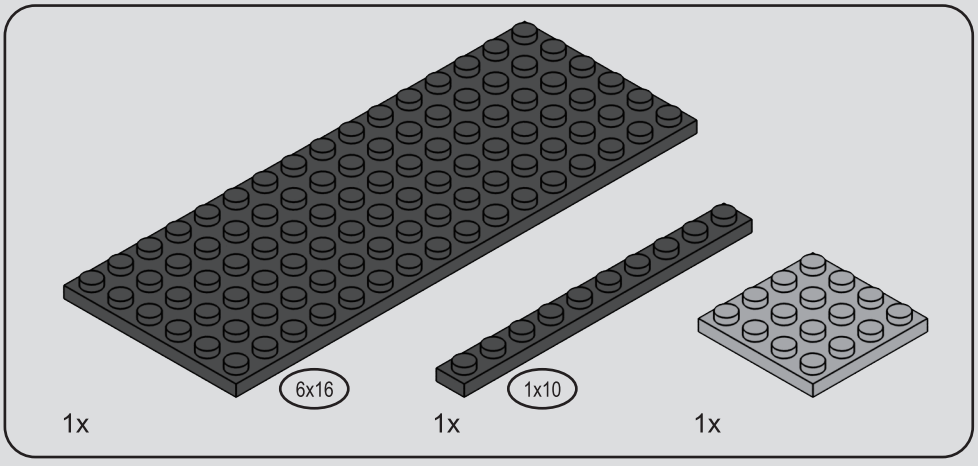

16

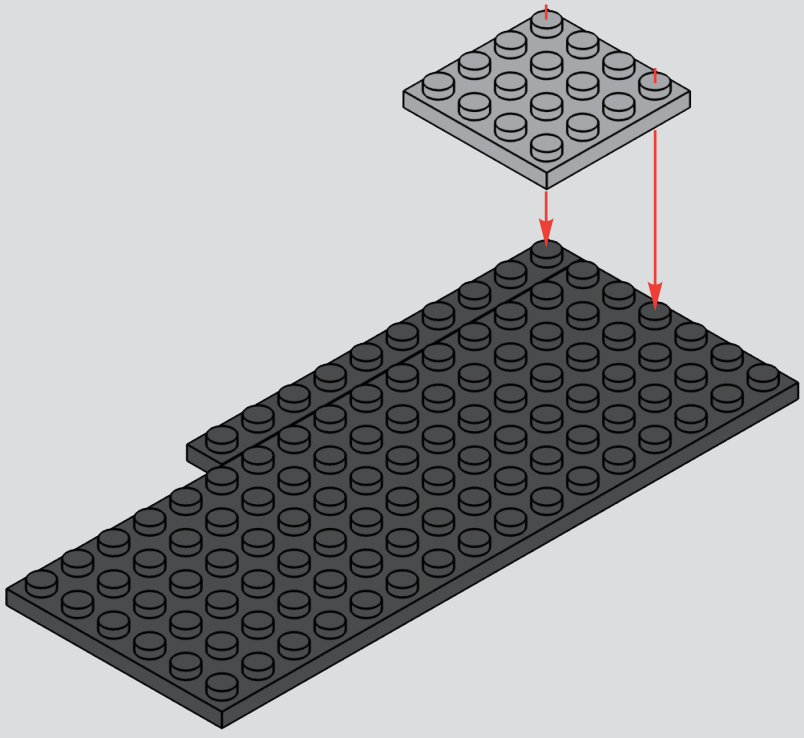

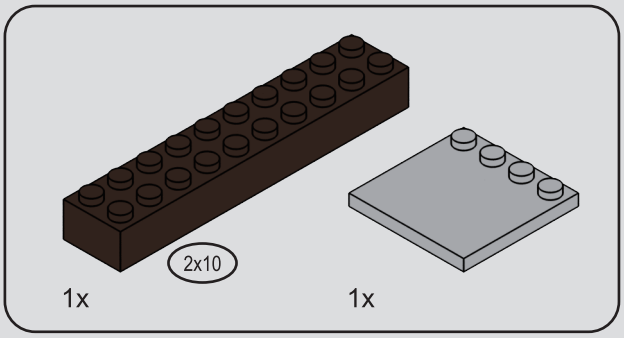

17

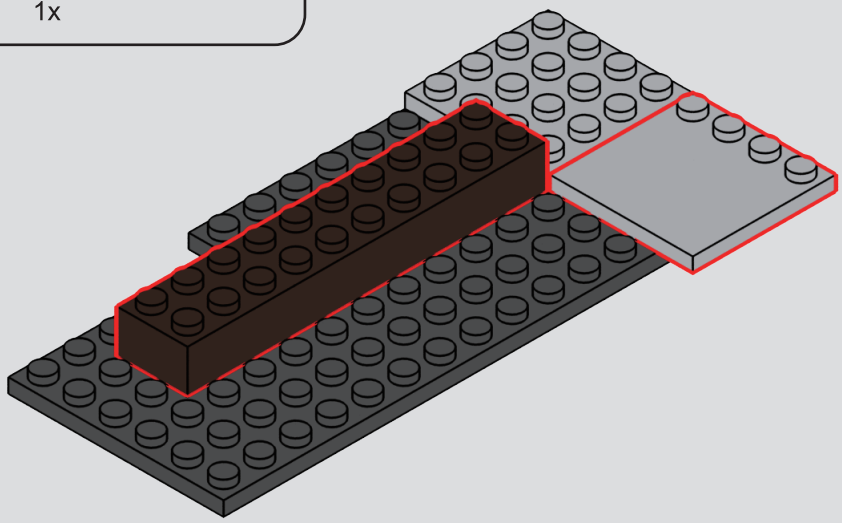

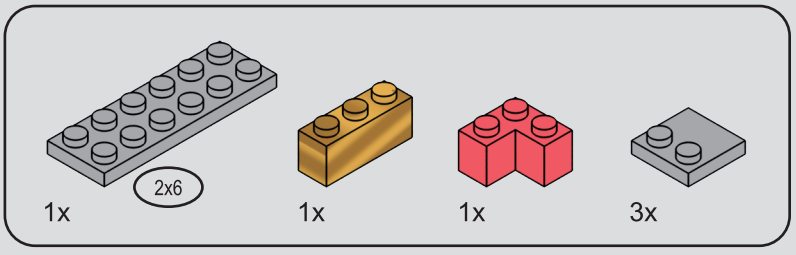

18

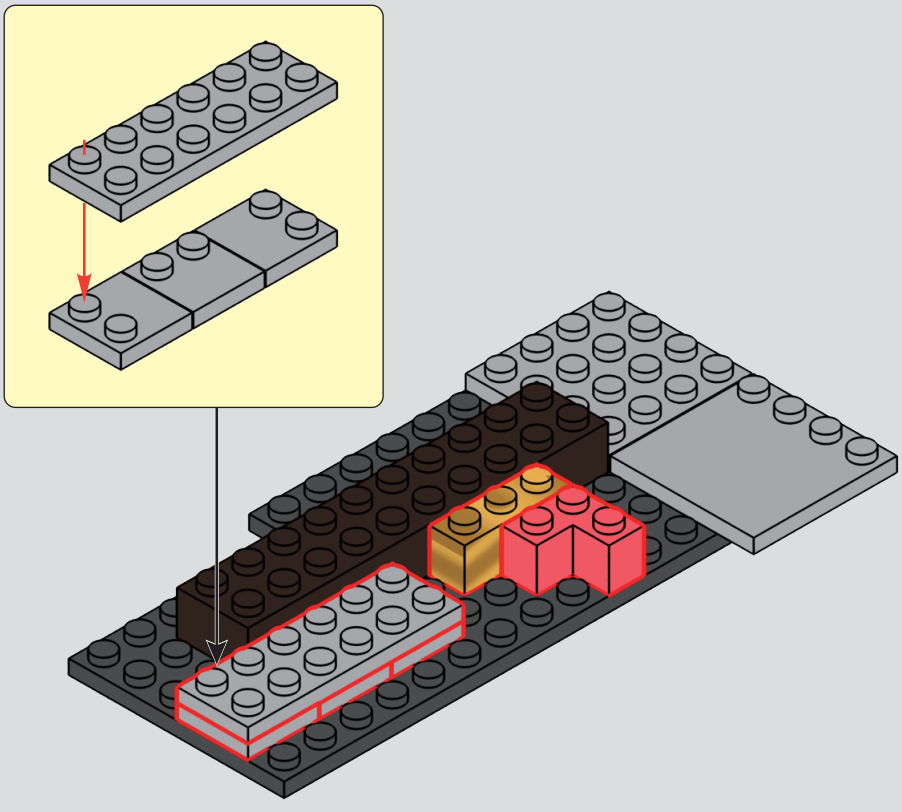

19

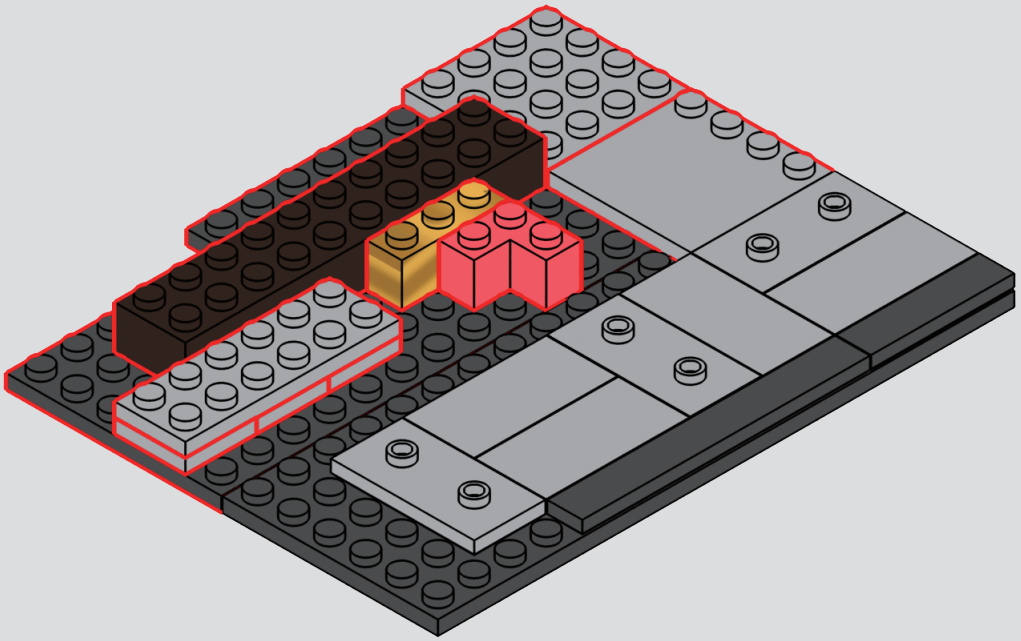

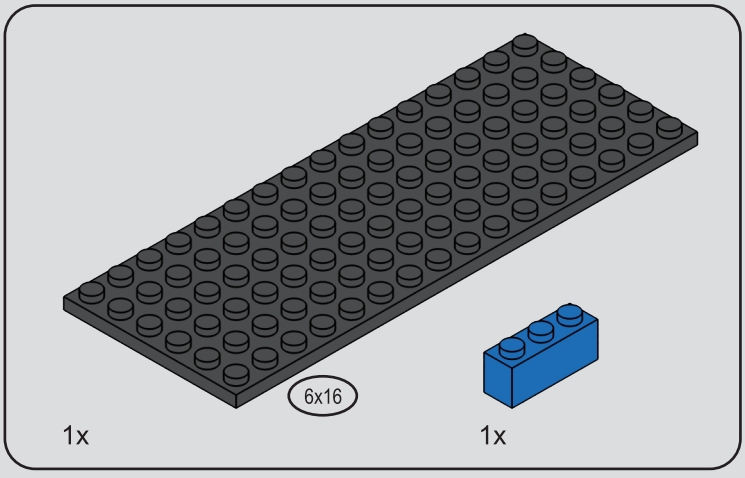

20

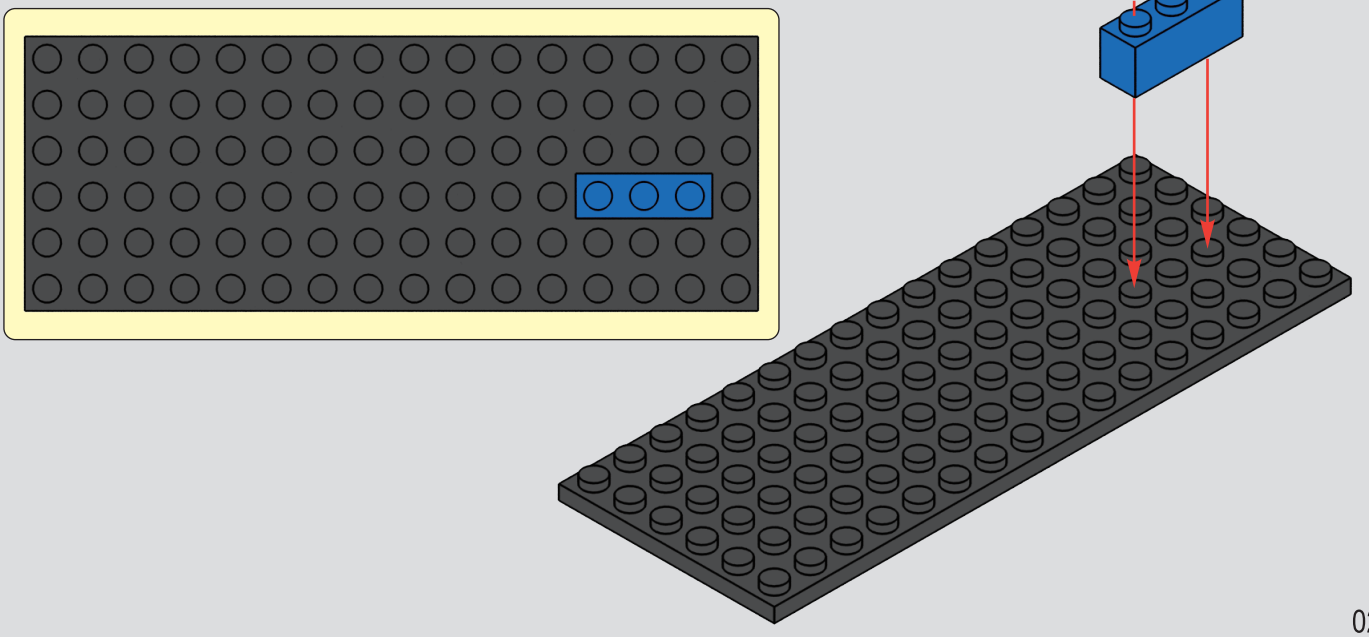

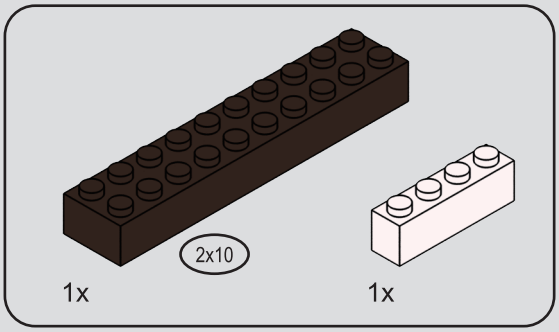

21

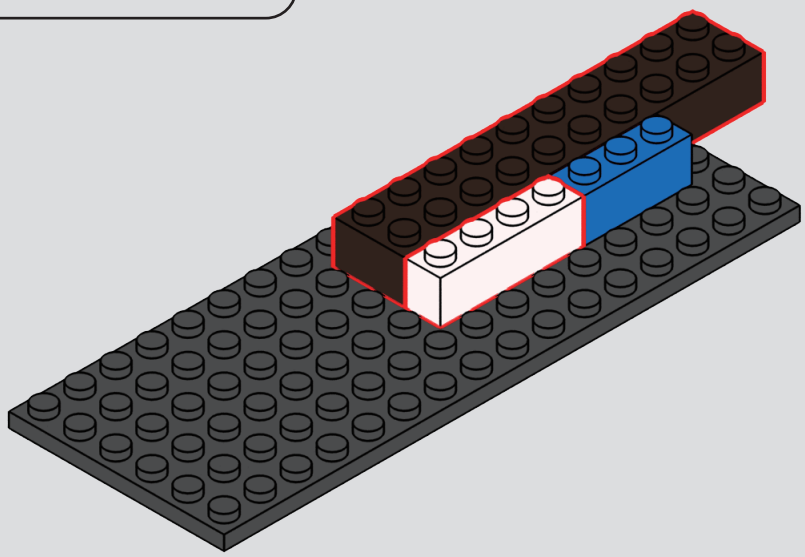

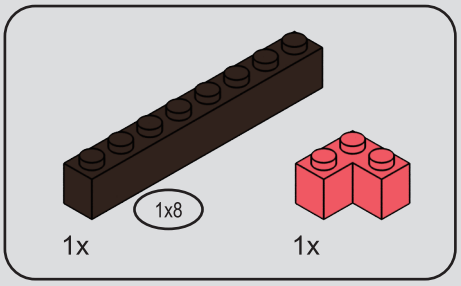

22

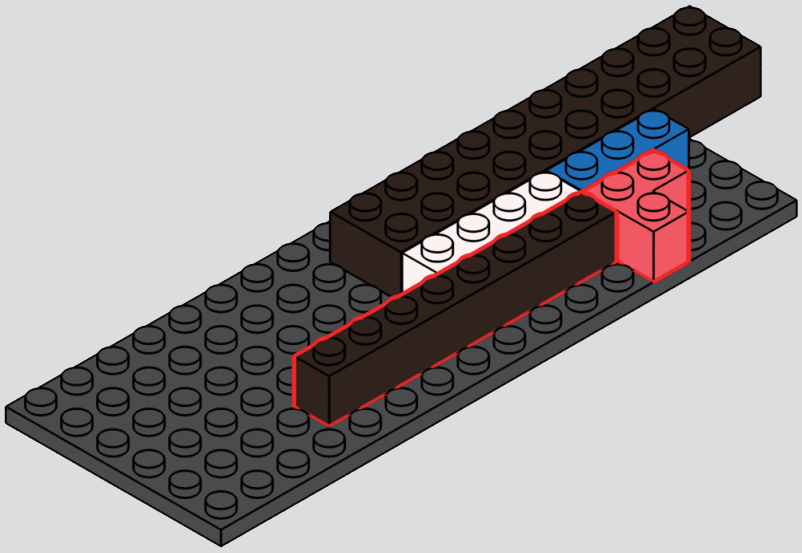

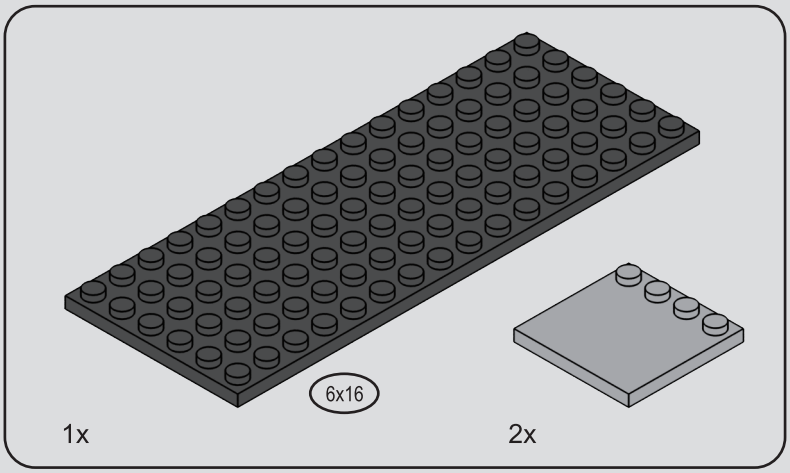

23

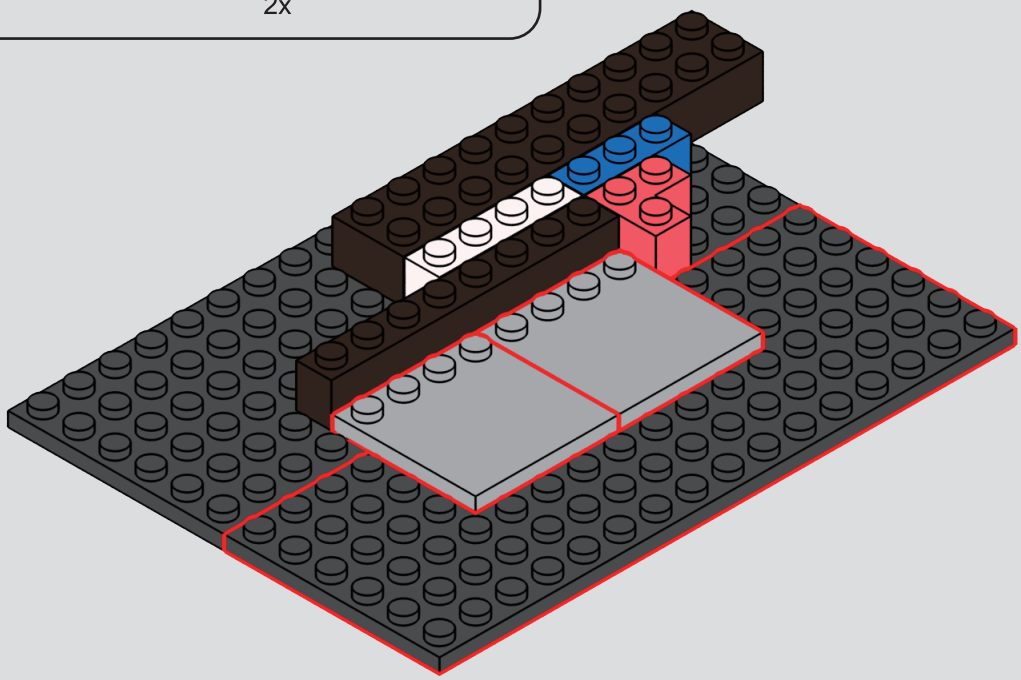

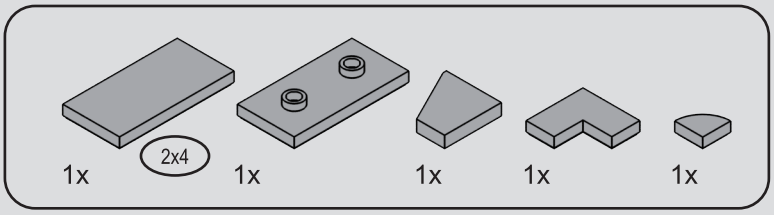

24

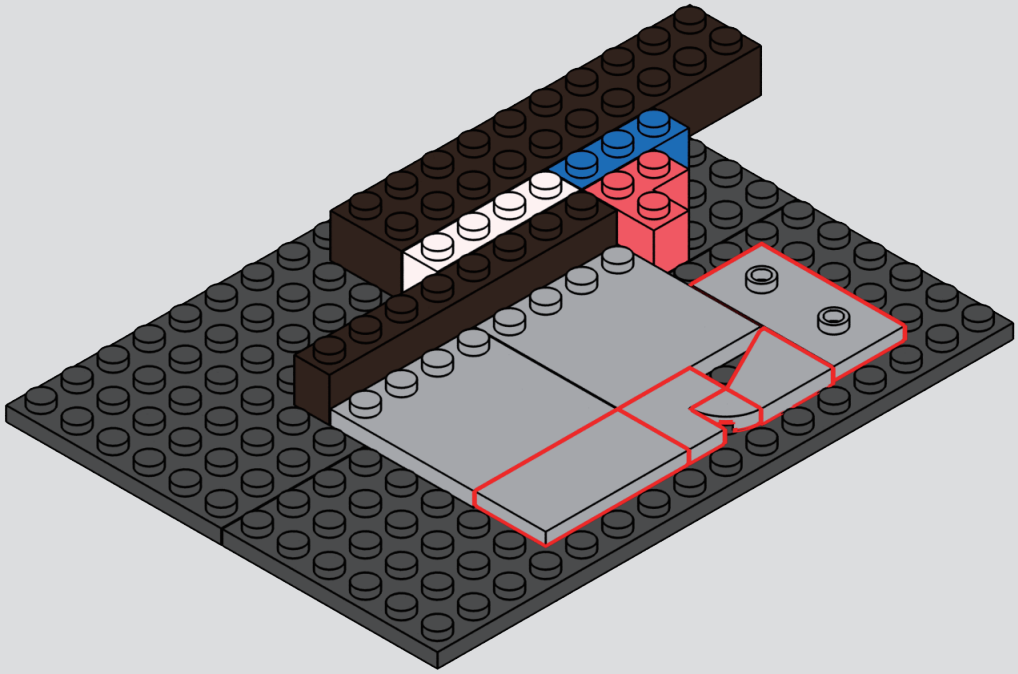

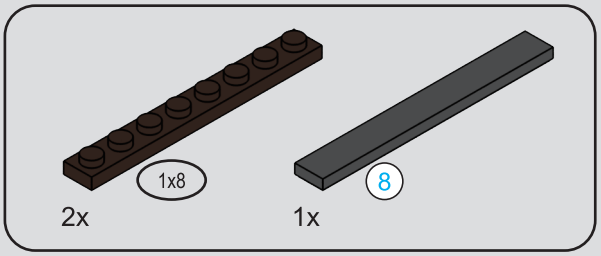



25

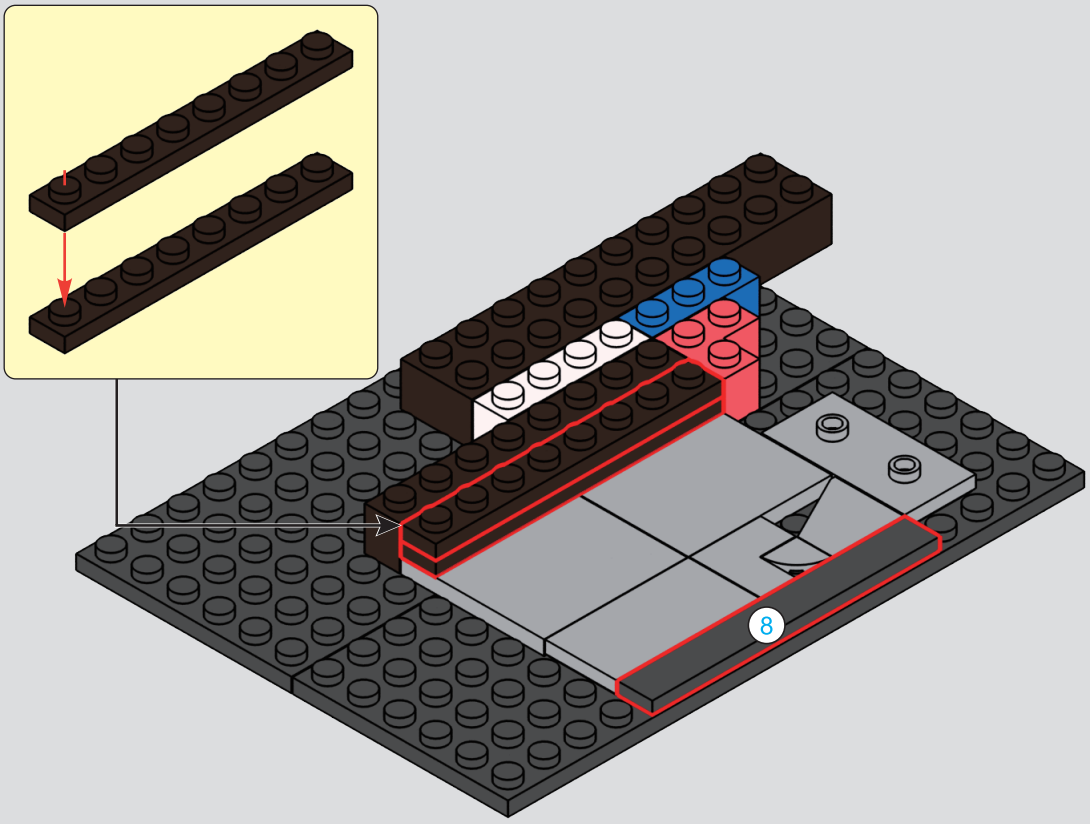

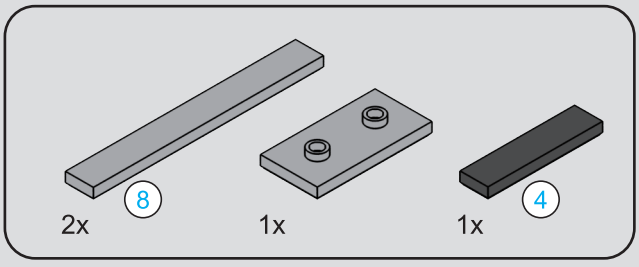





26

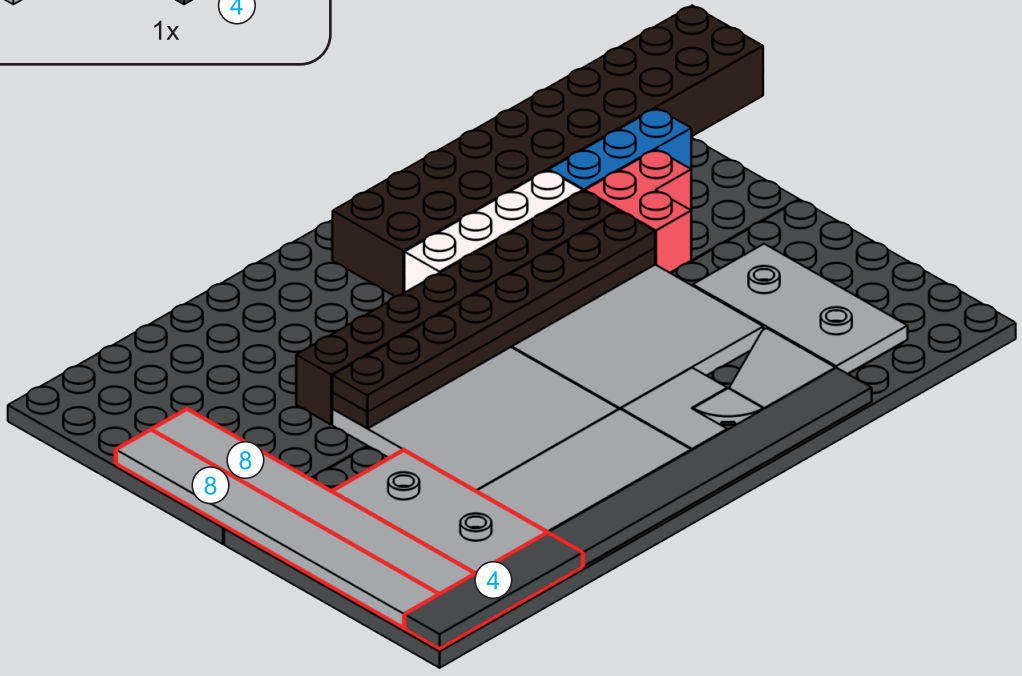

27

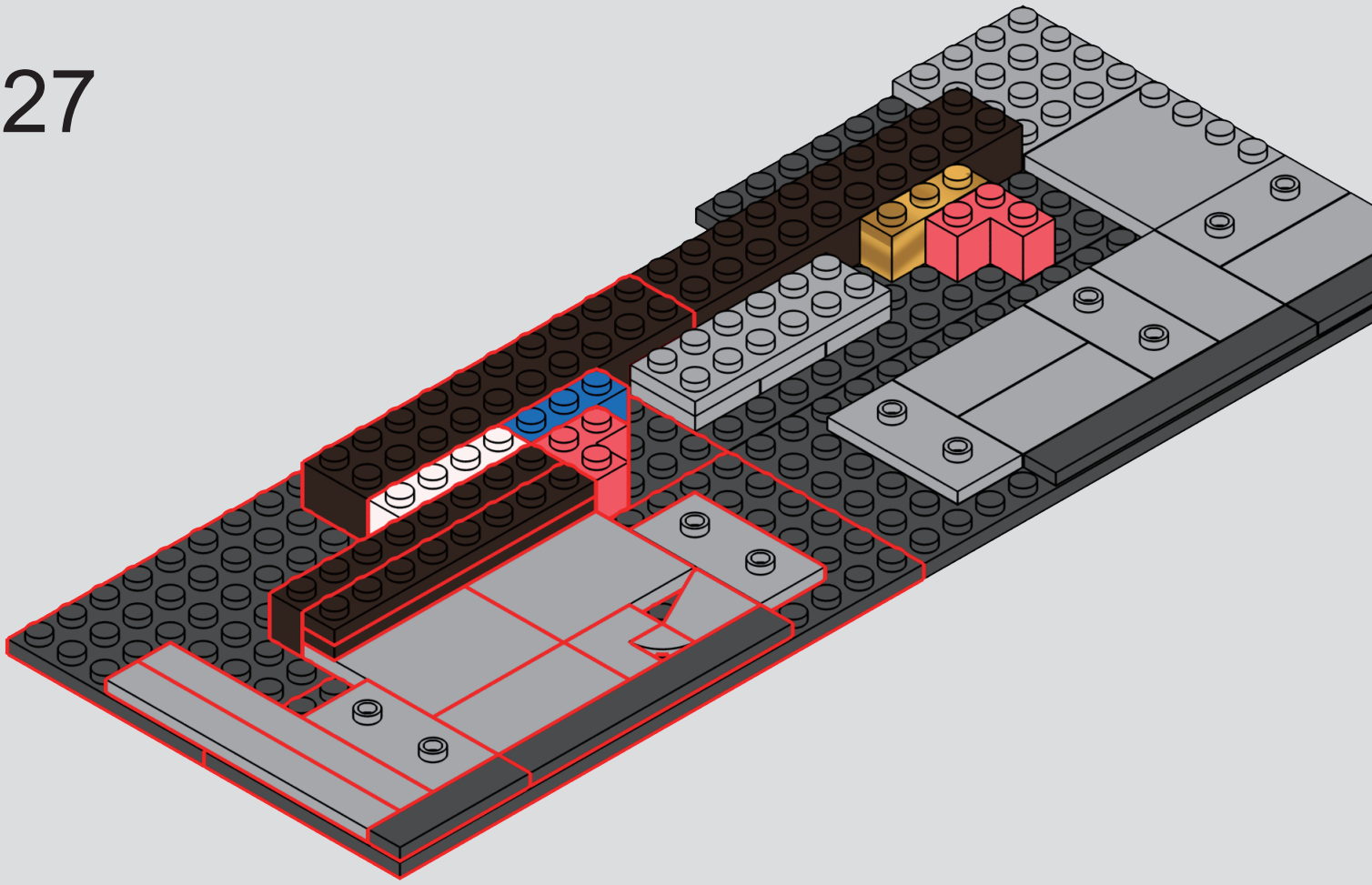

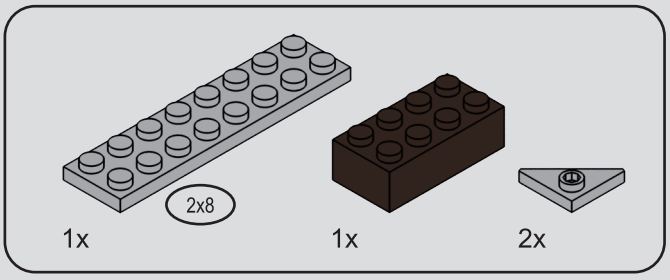

28

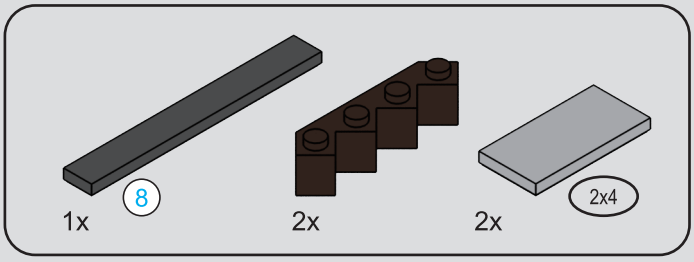



29

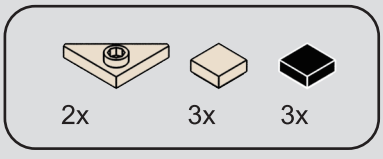

30

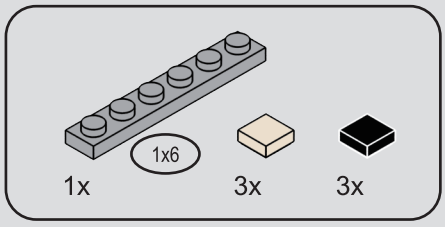

31

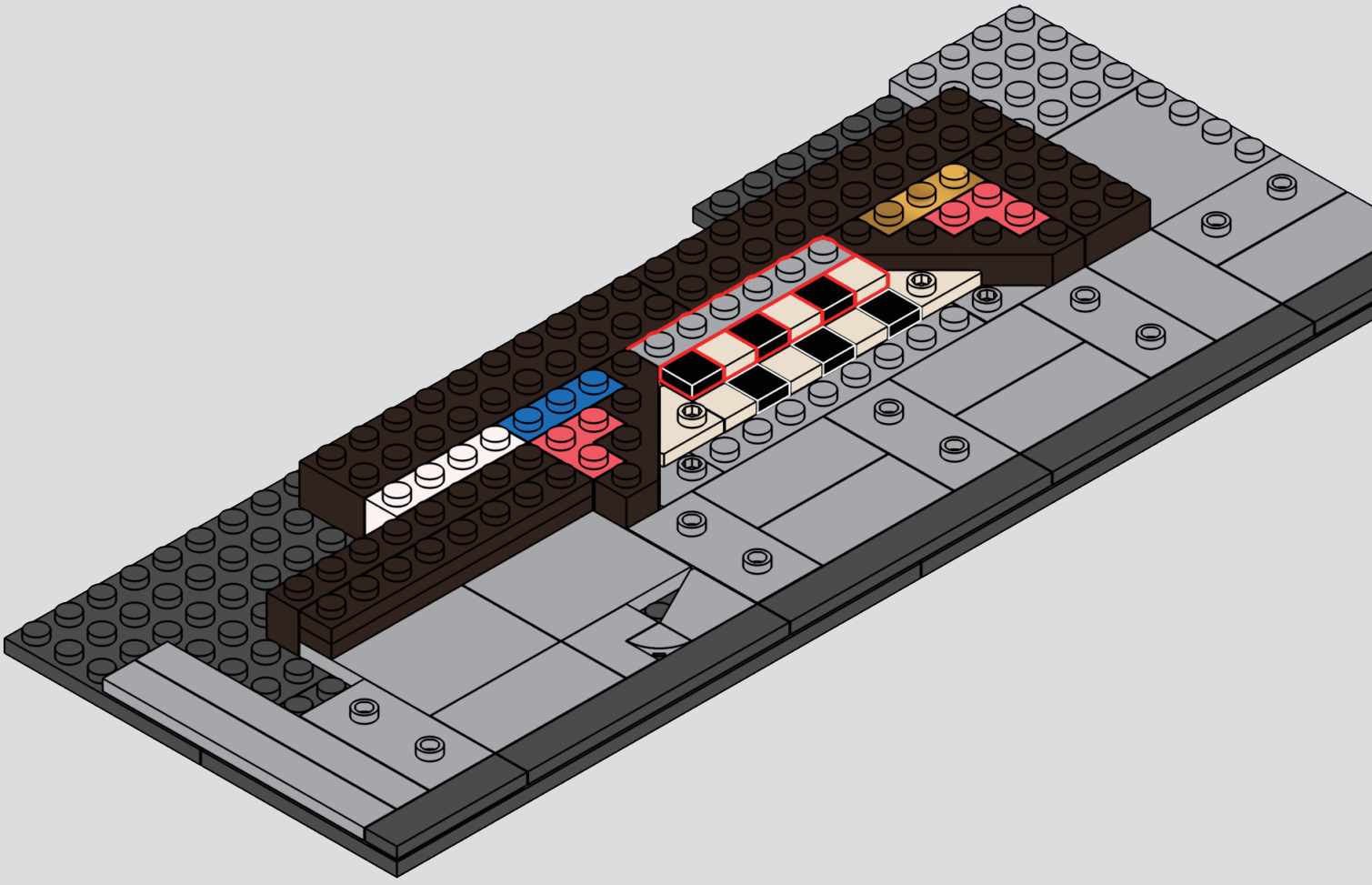

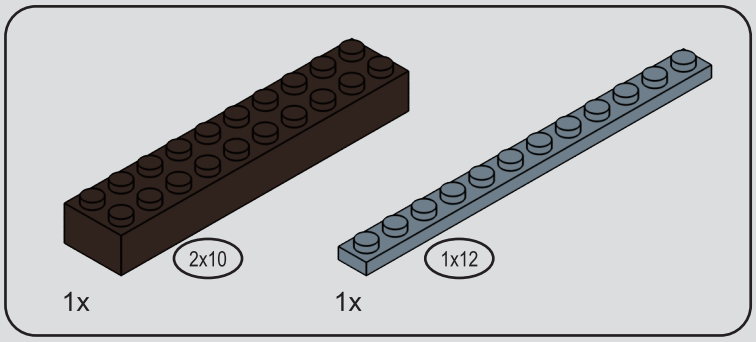

32

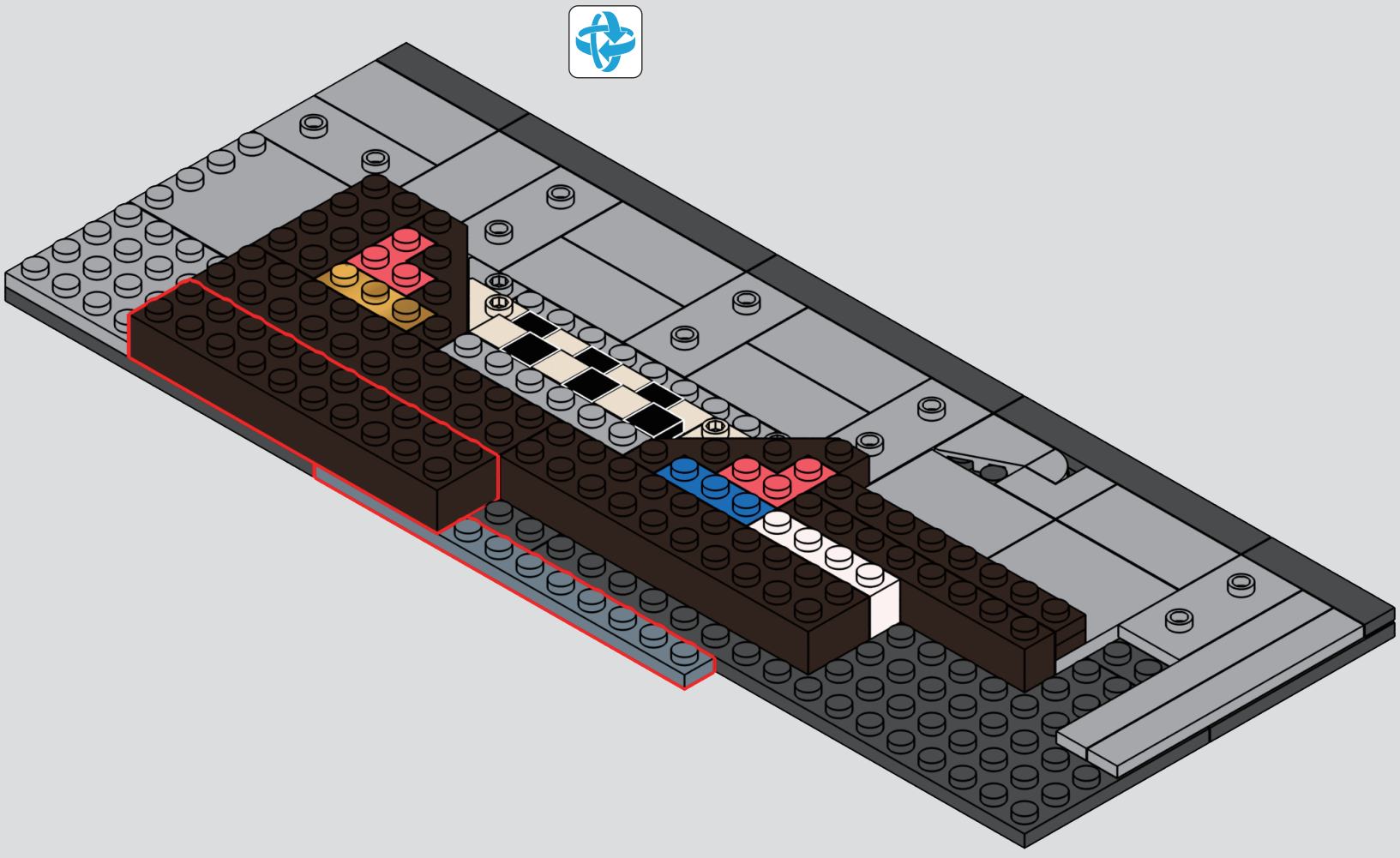

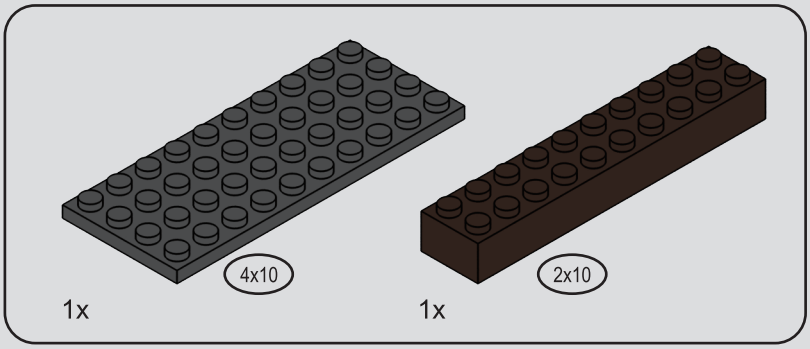

33

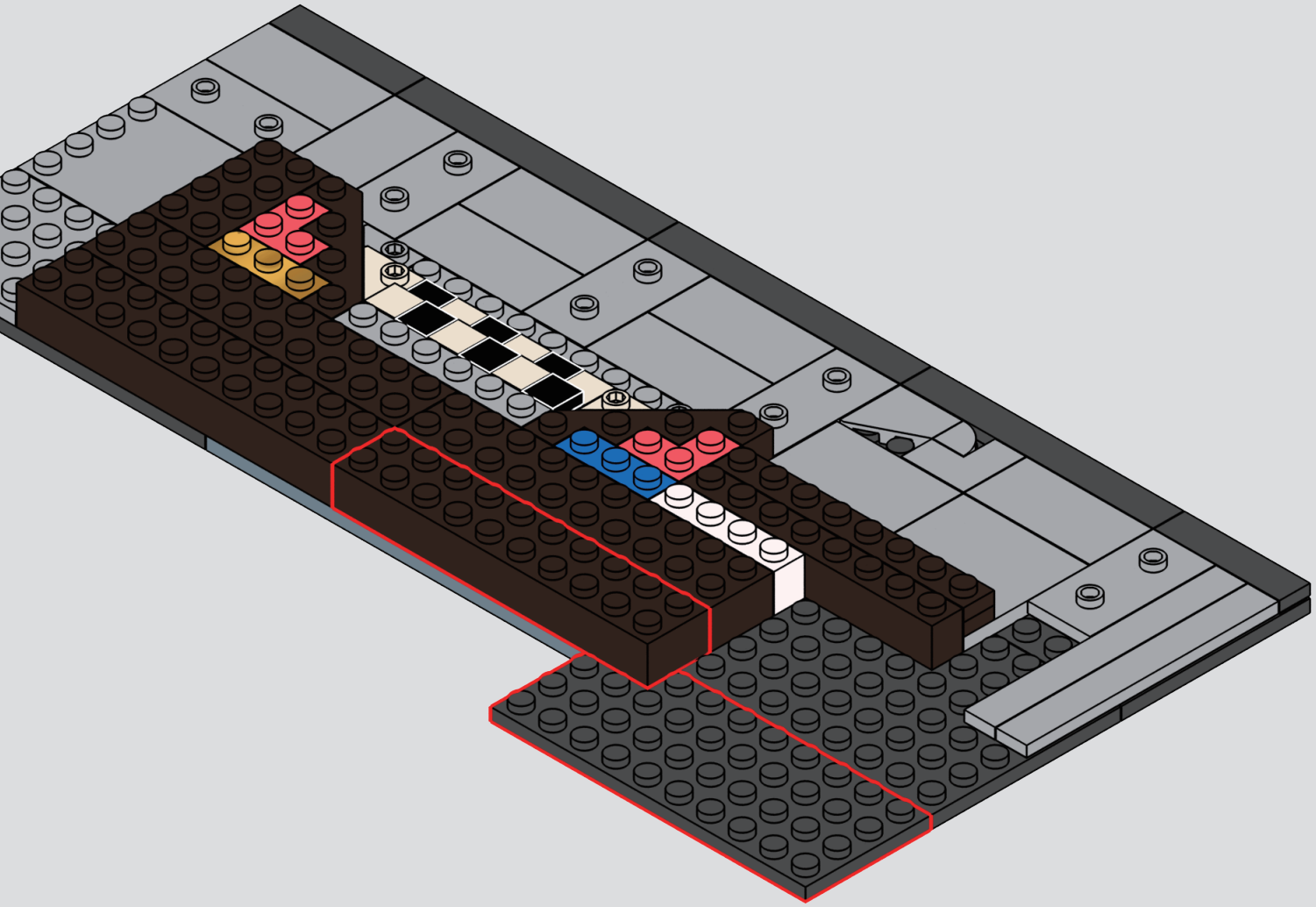

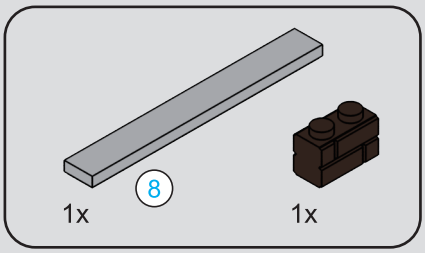



34

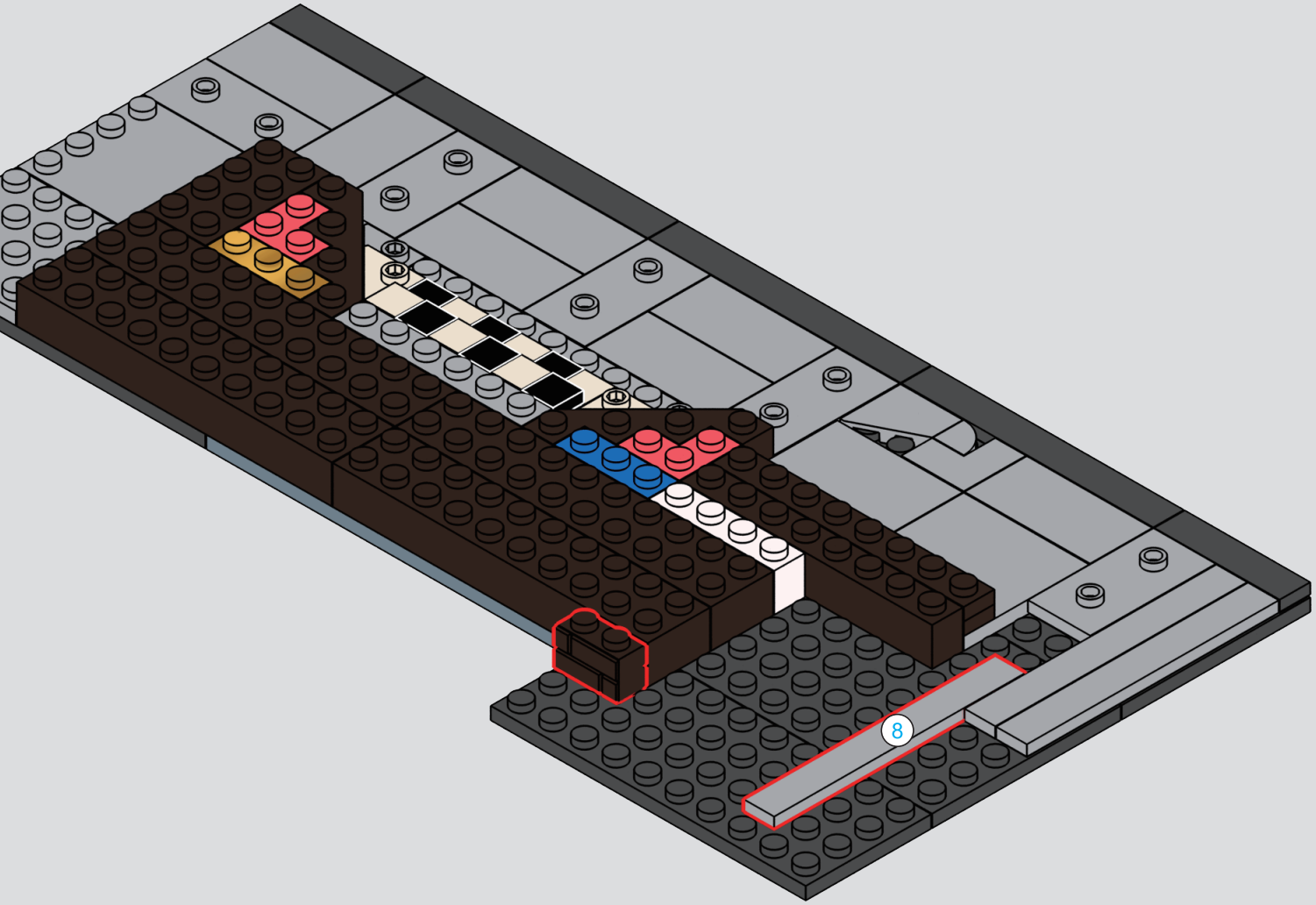

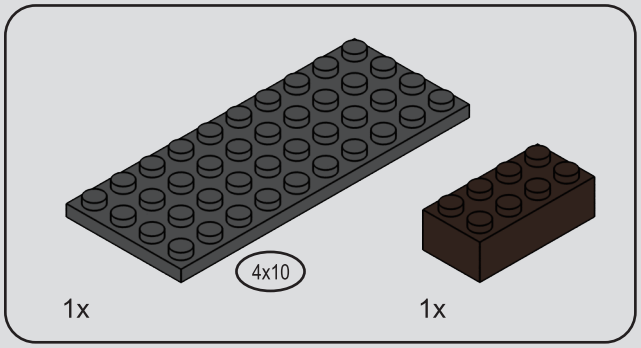

35

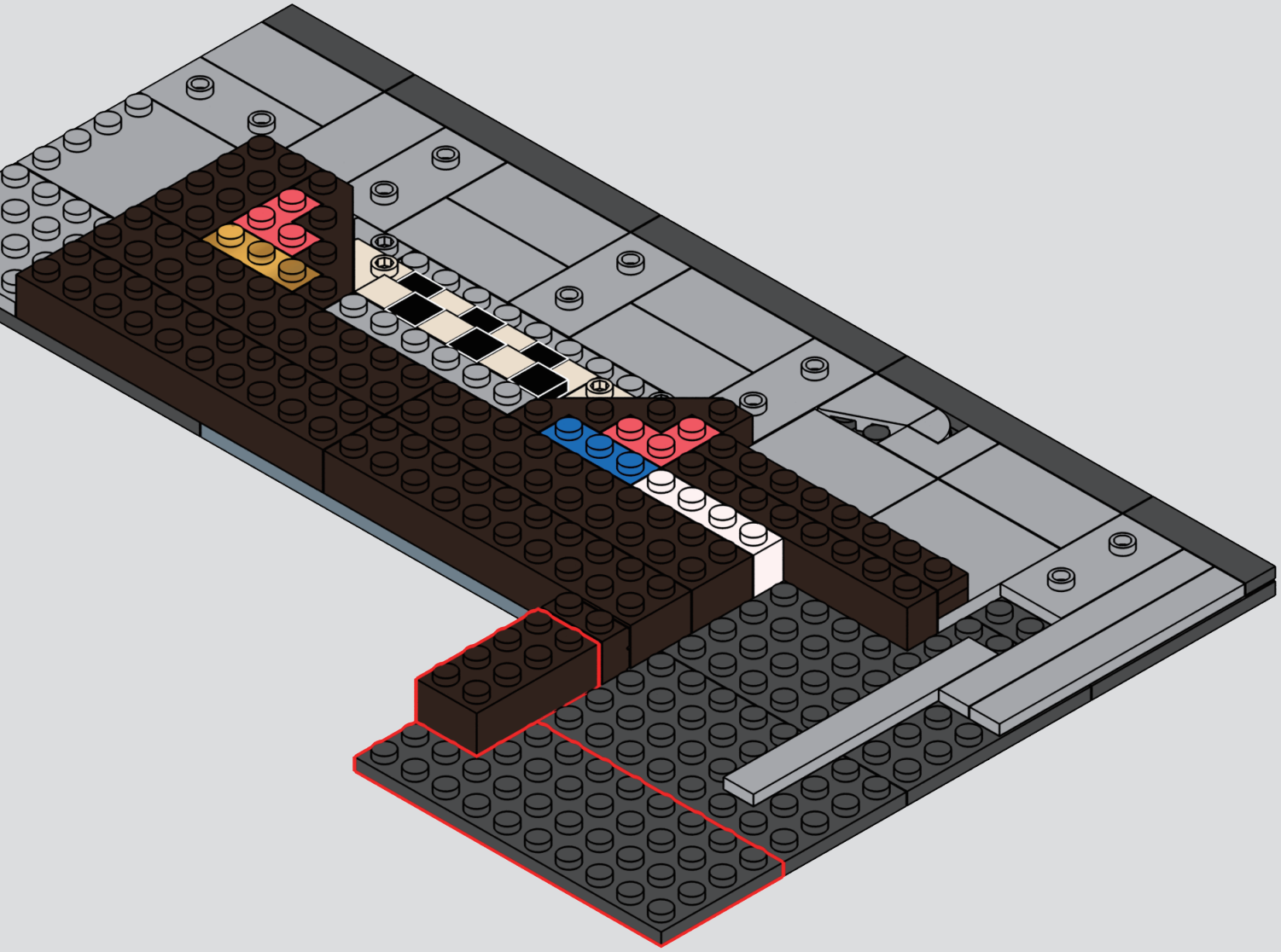

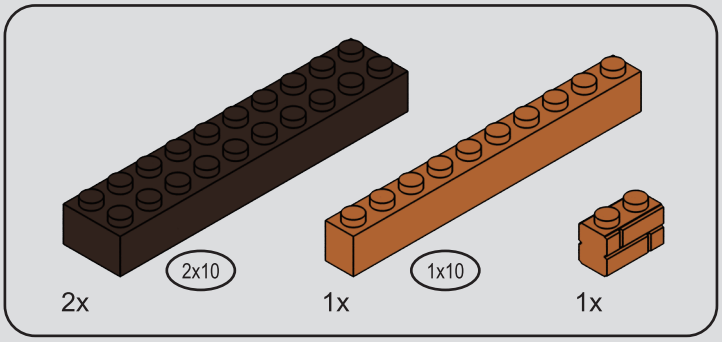

36

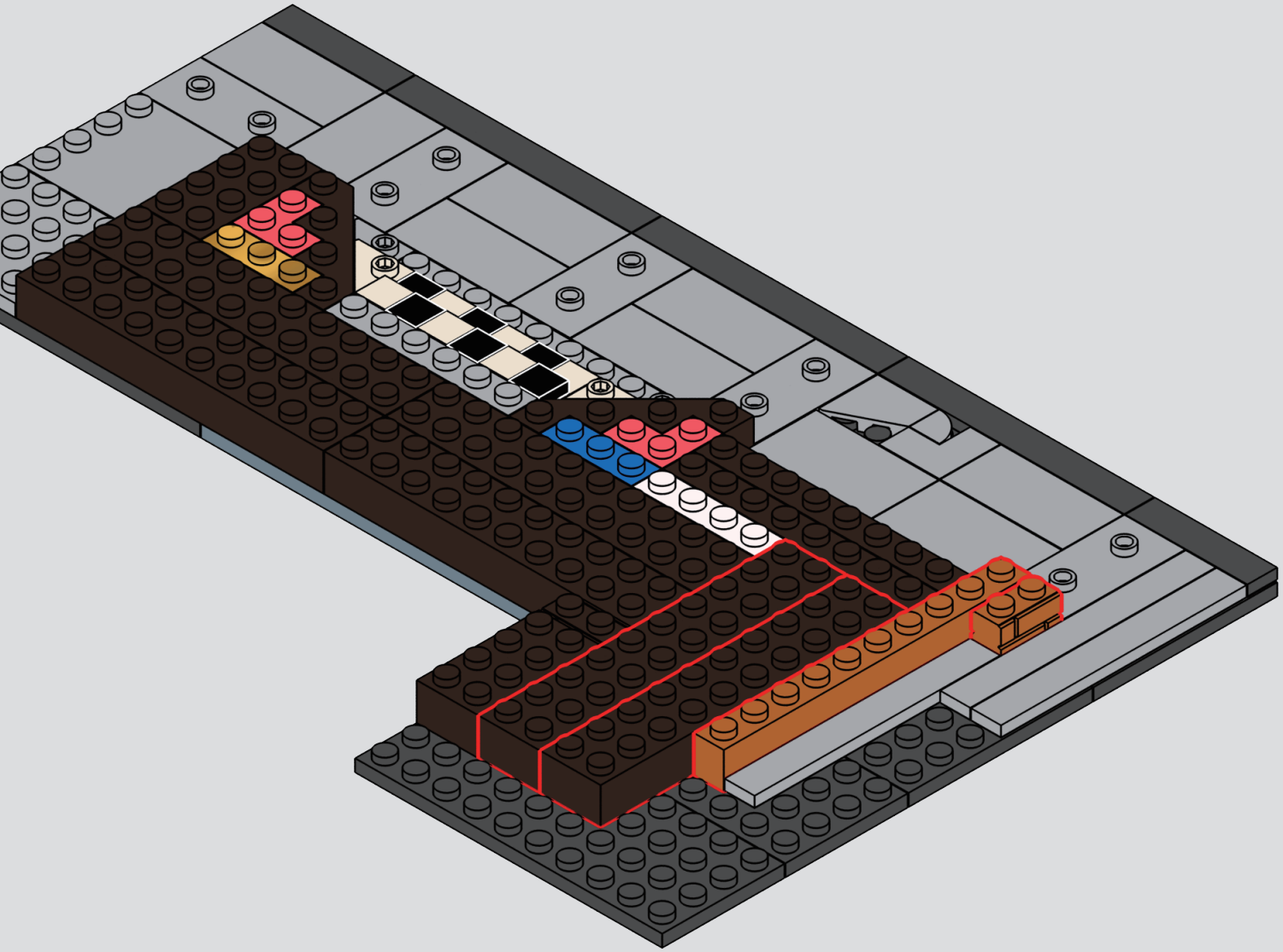

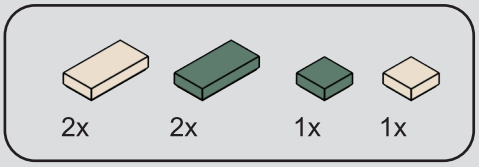

37

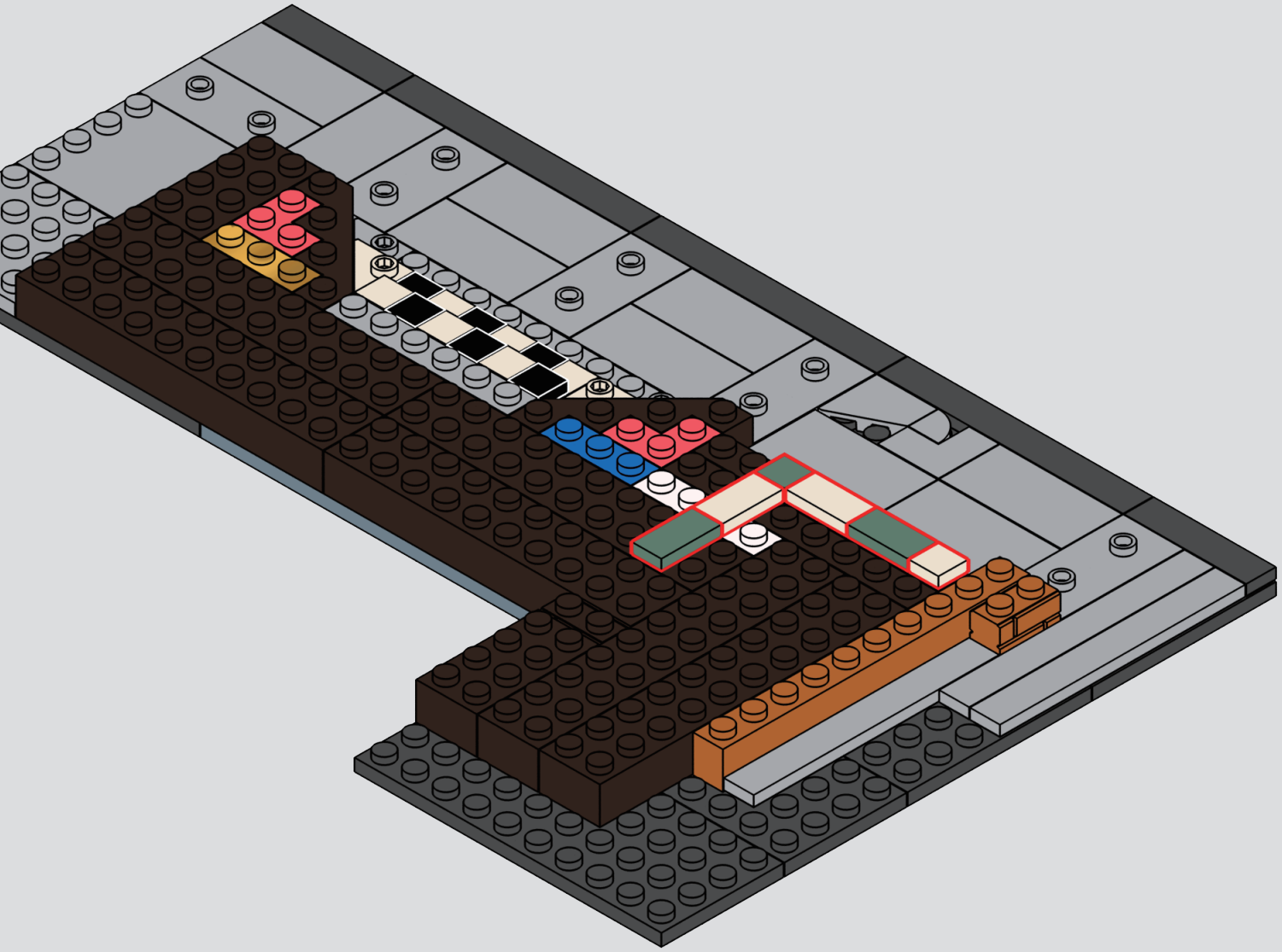

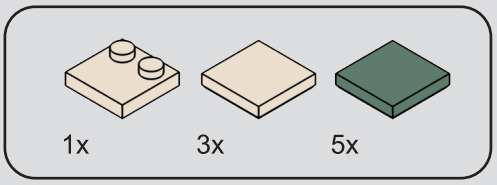

38

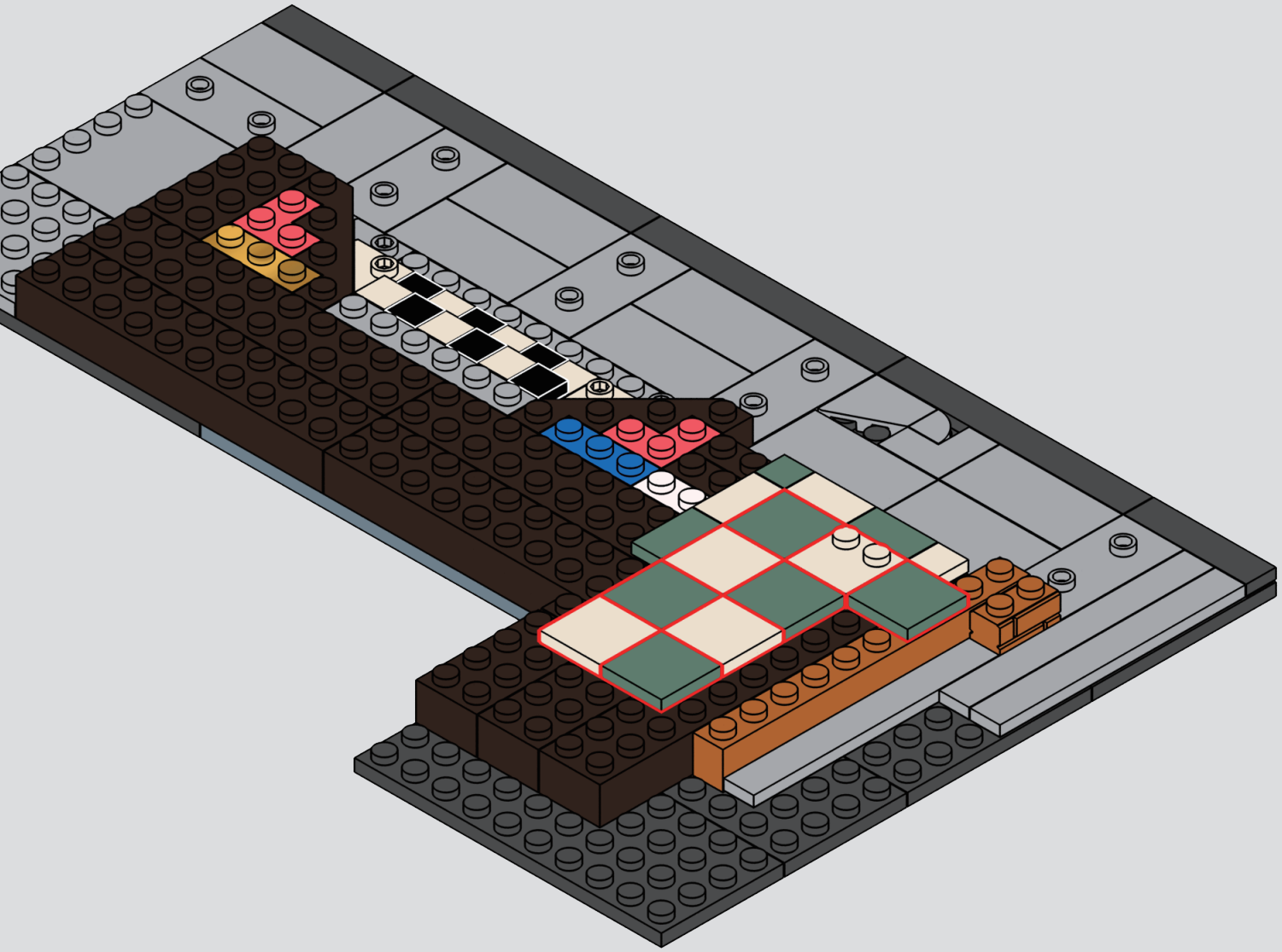

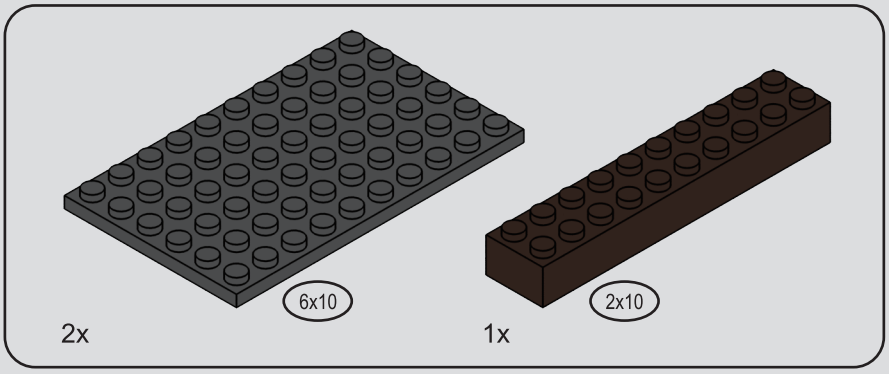

39

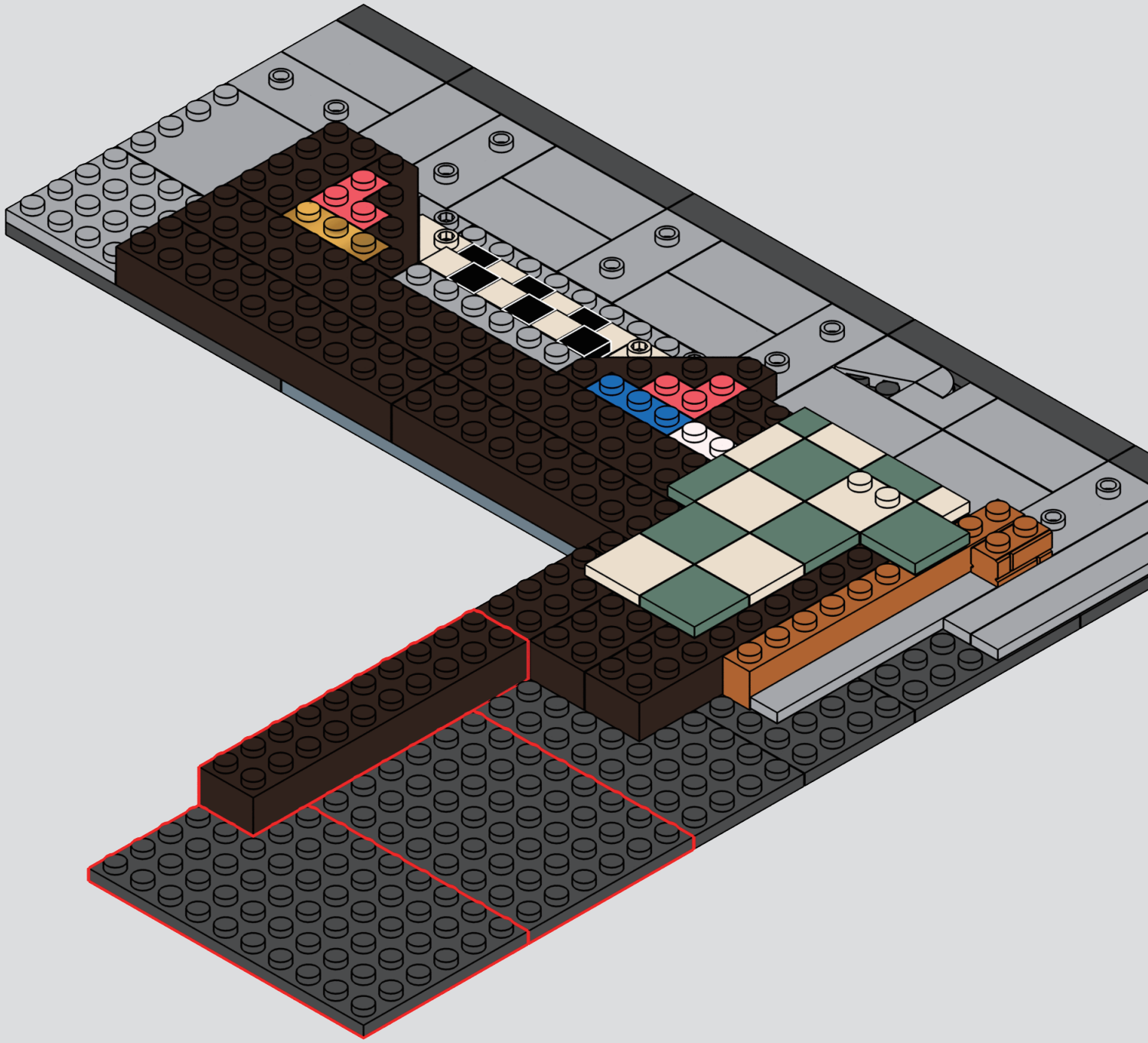

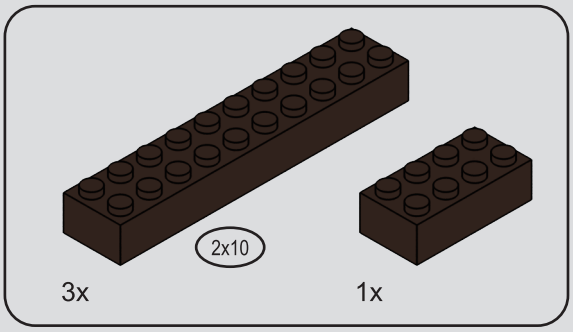

40

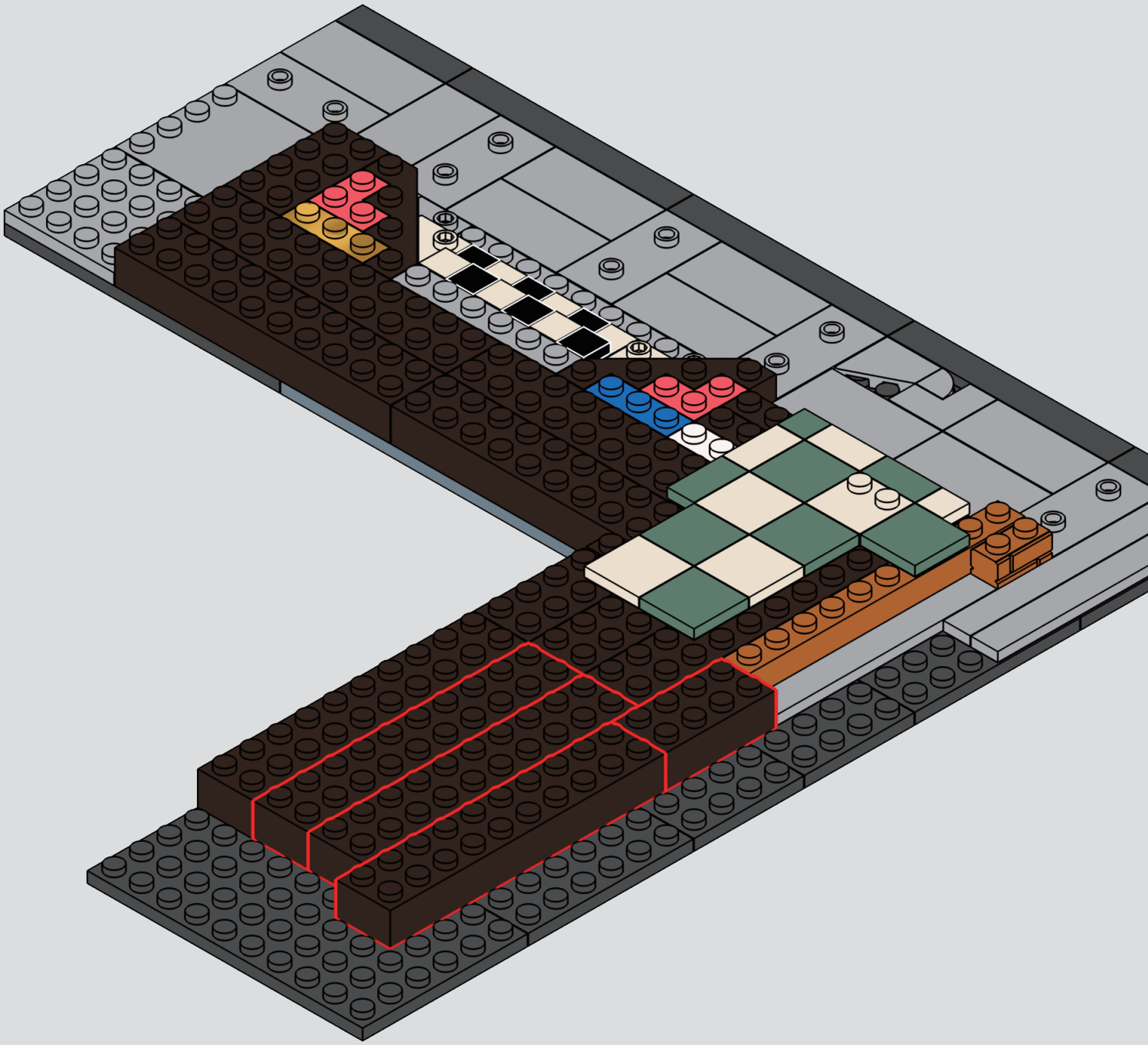

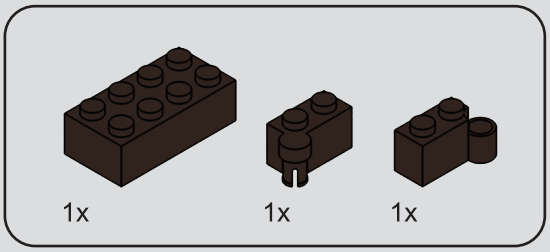

41

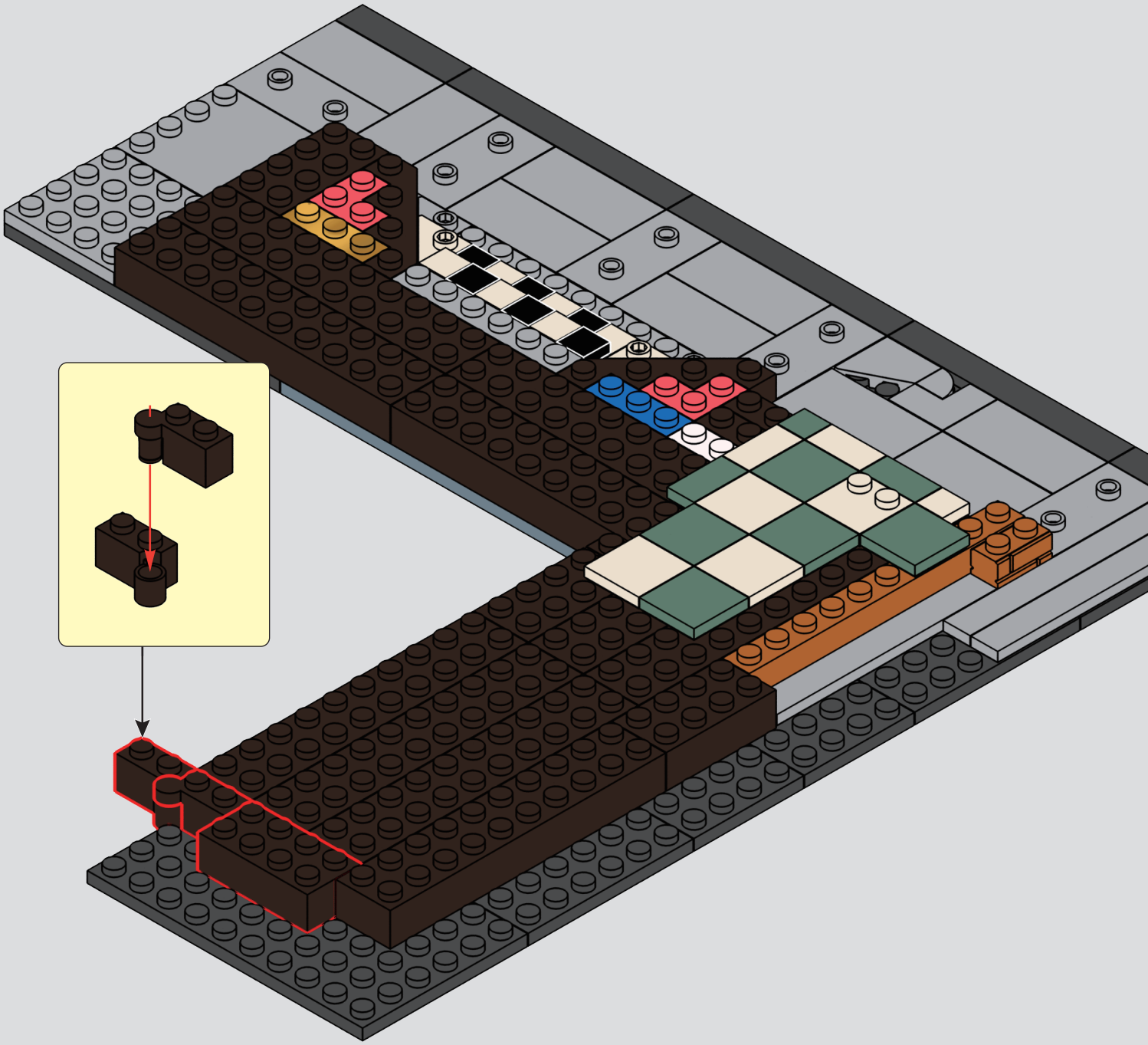

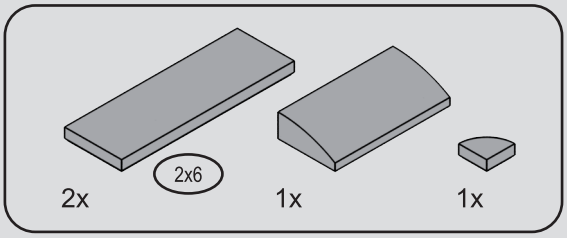

42

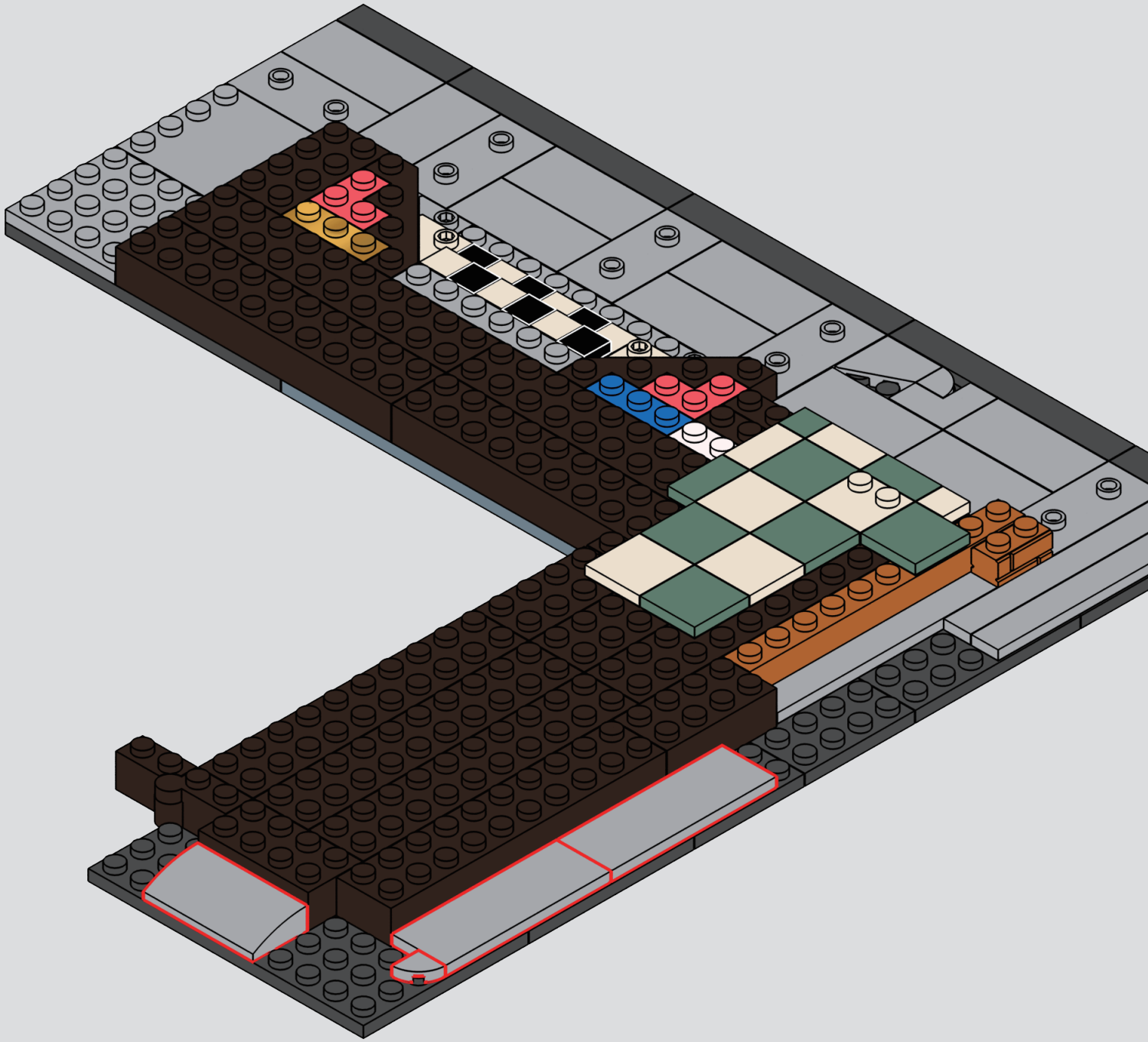

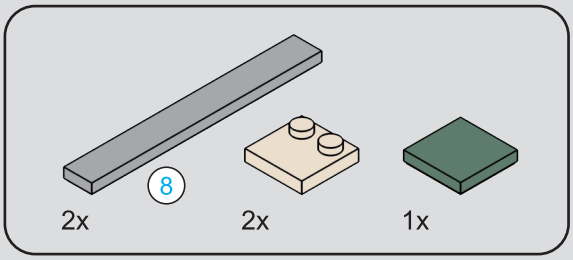



43

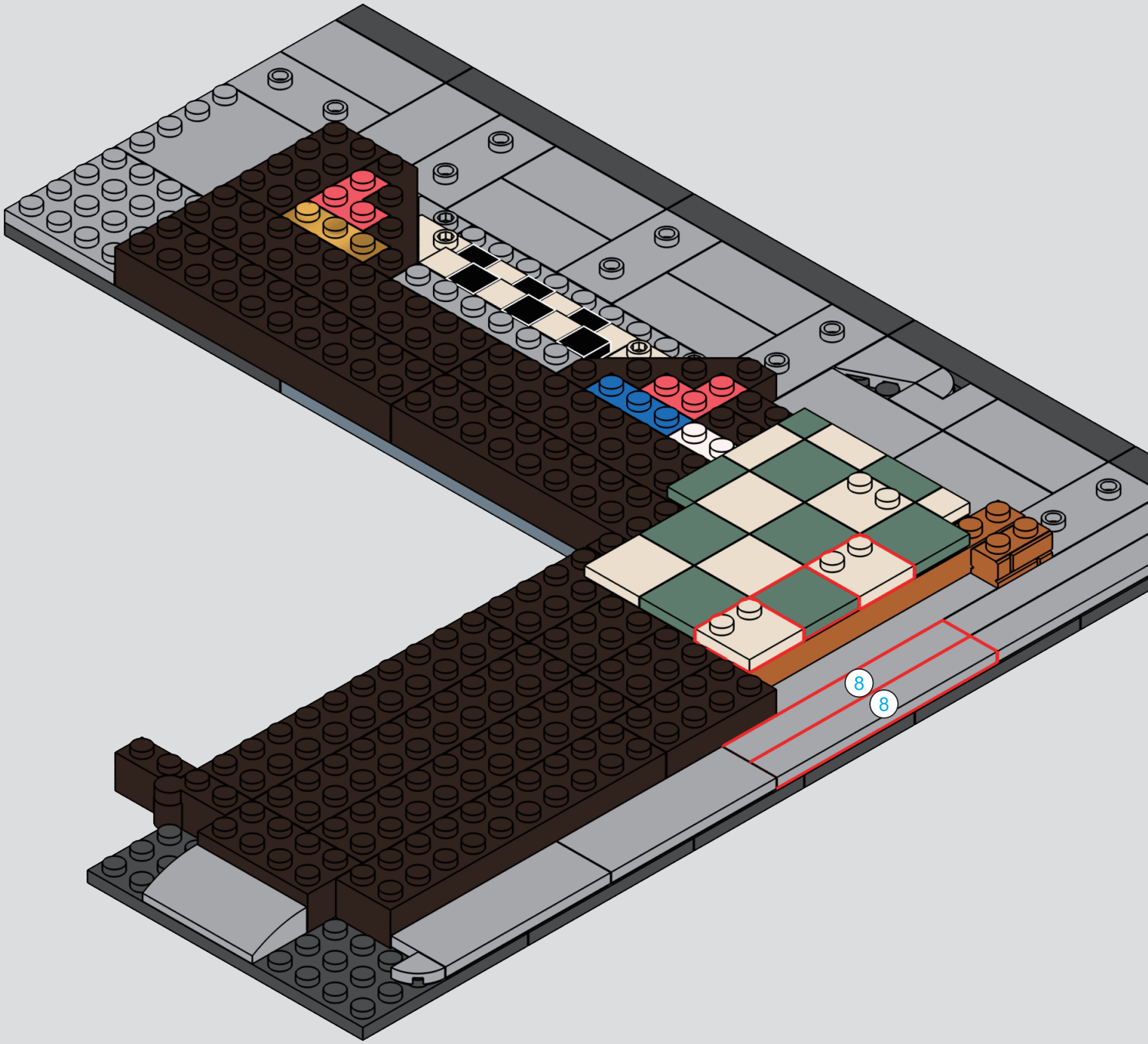

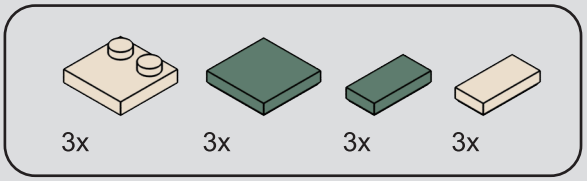

44

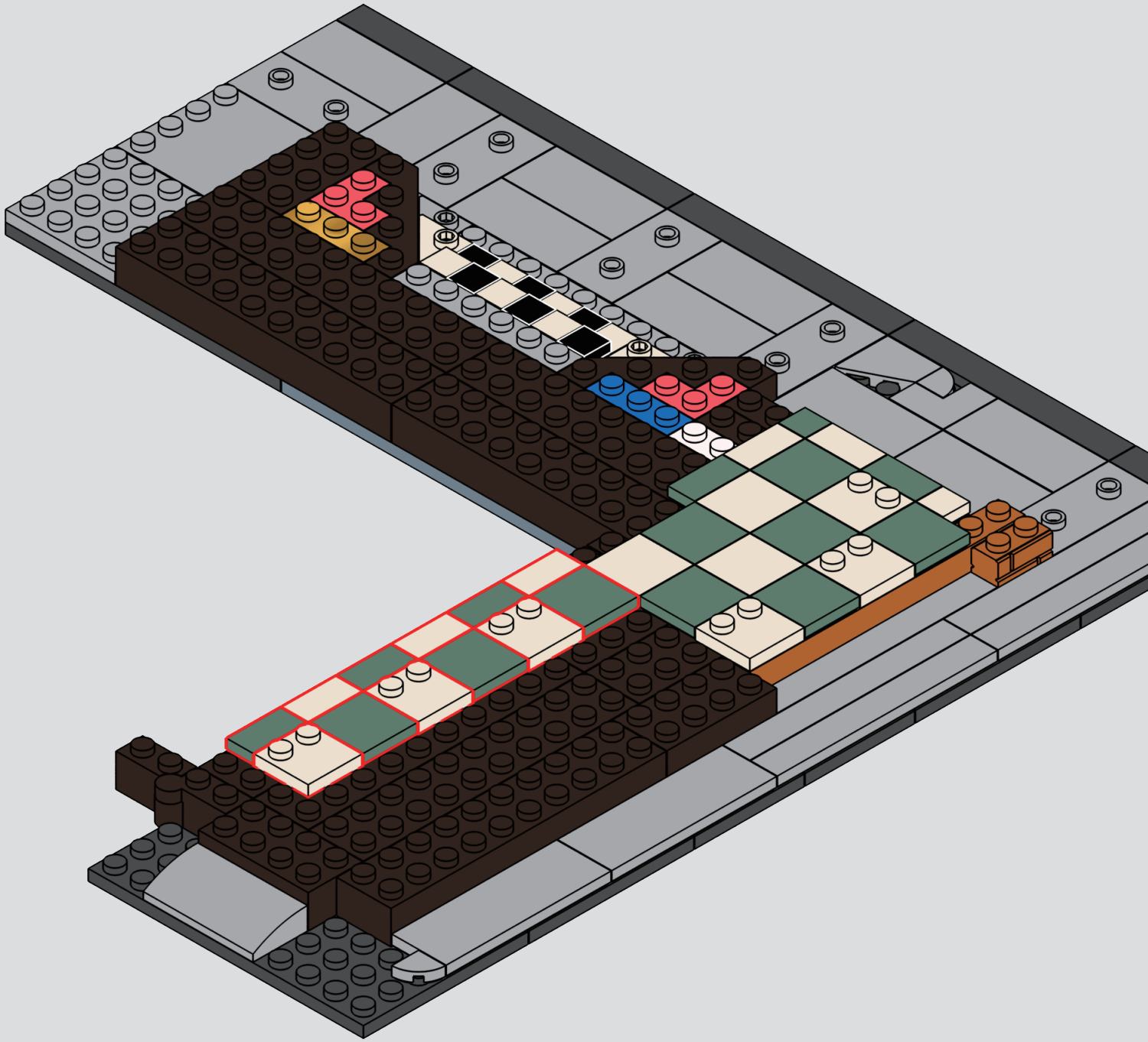

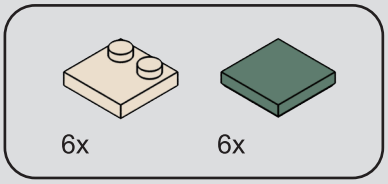

45

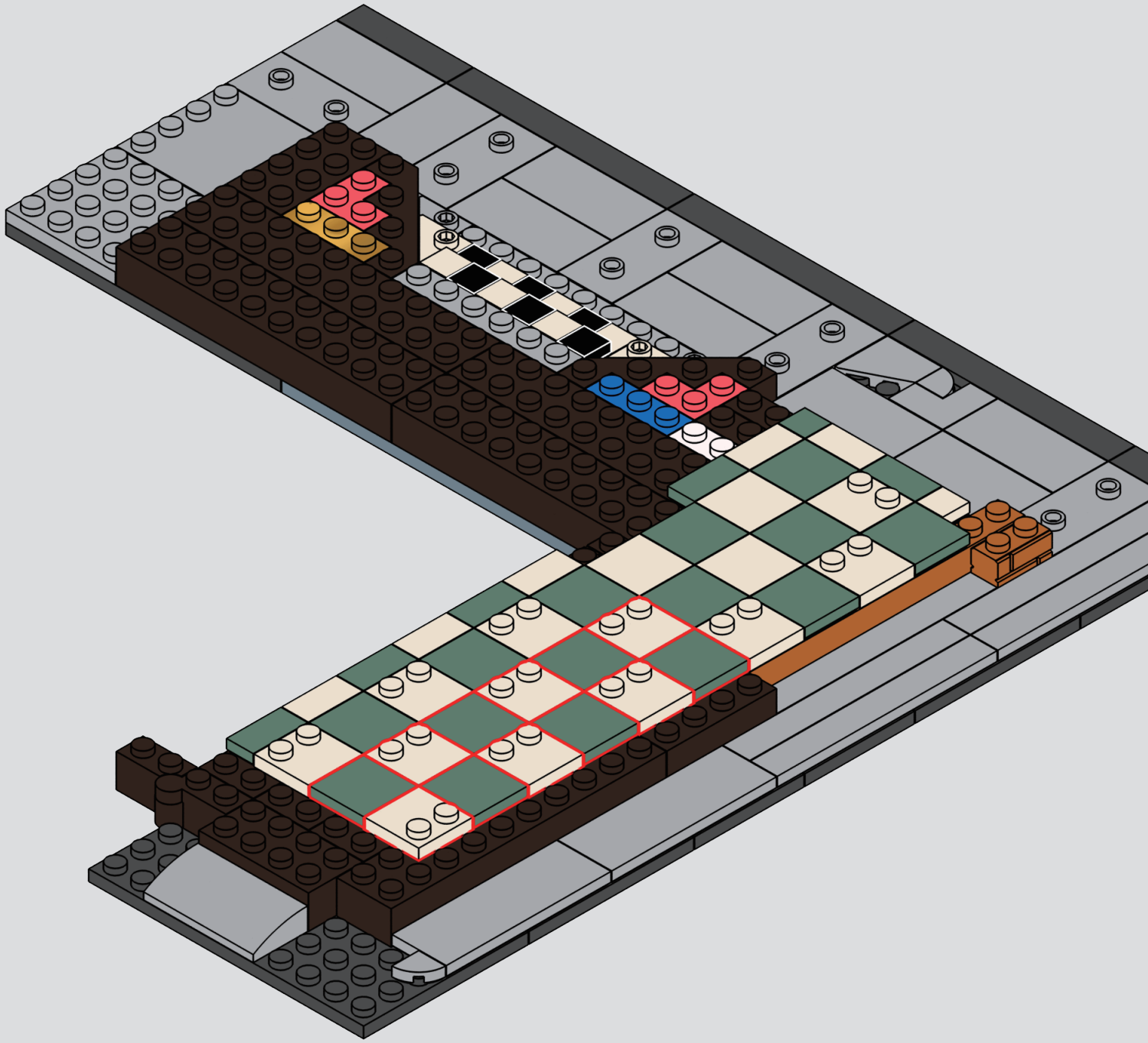

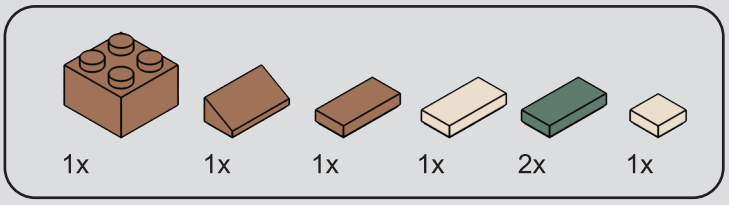

46

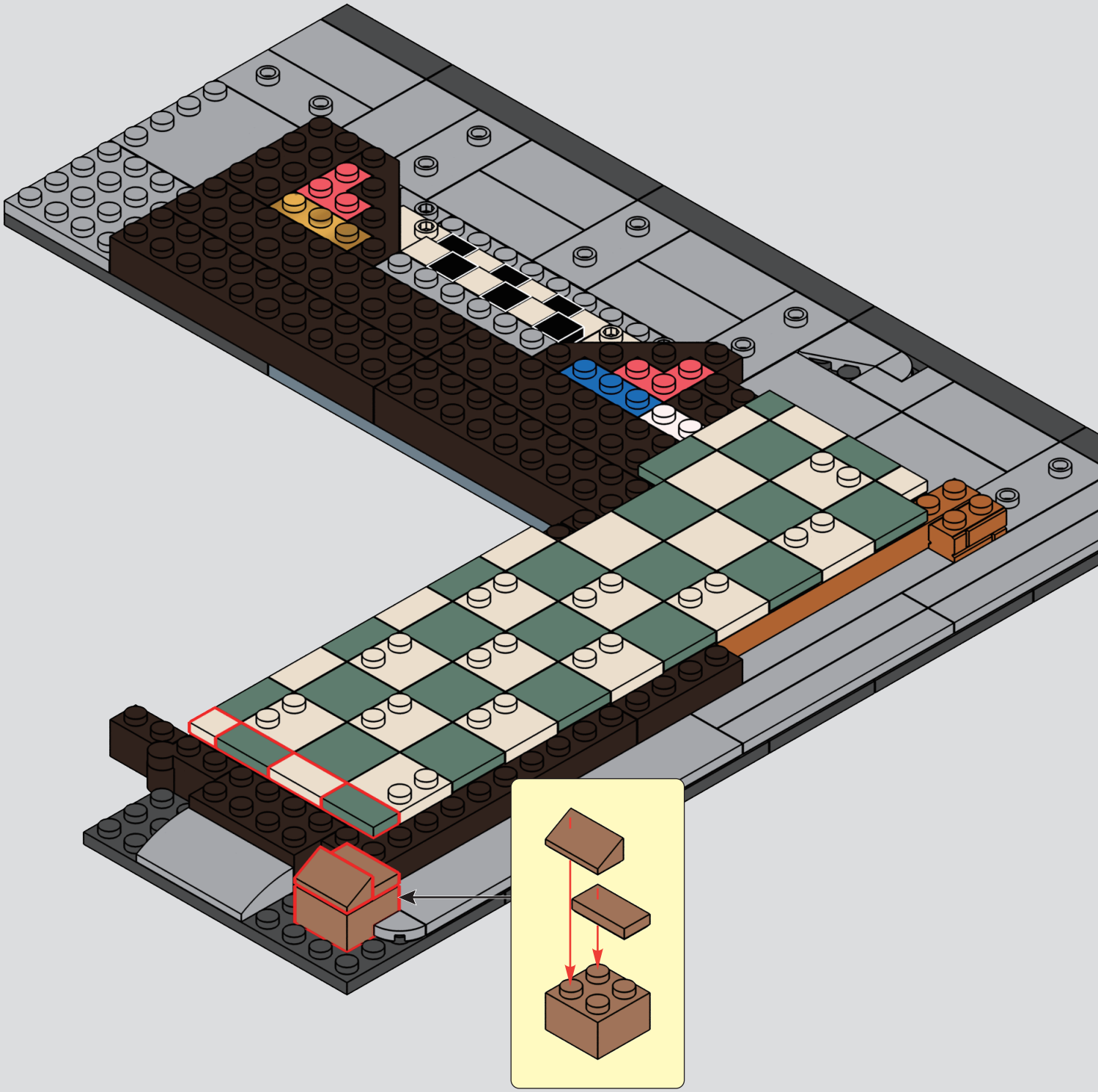

47

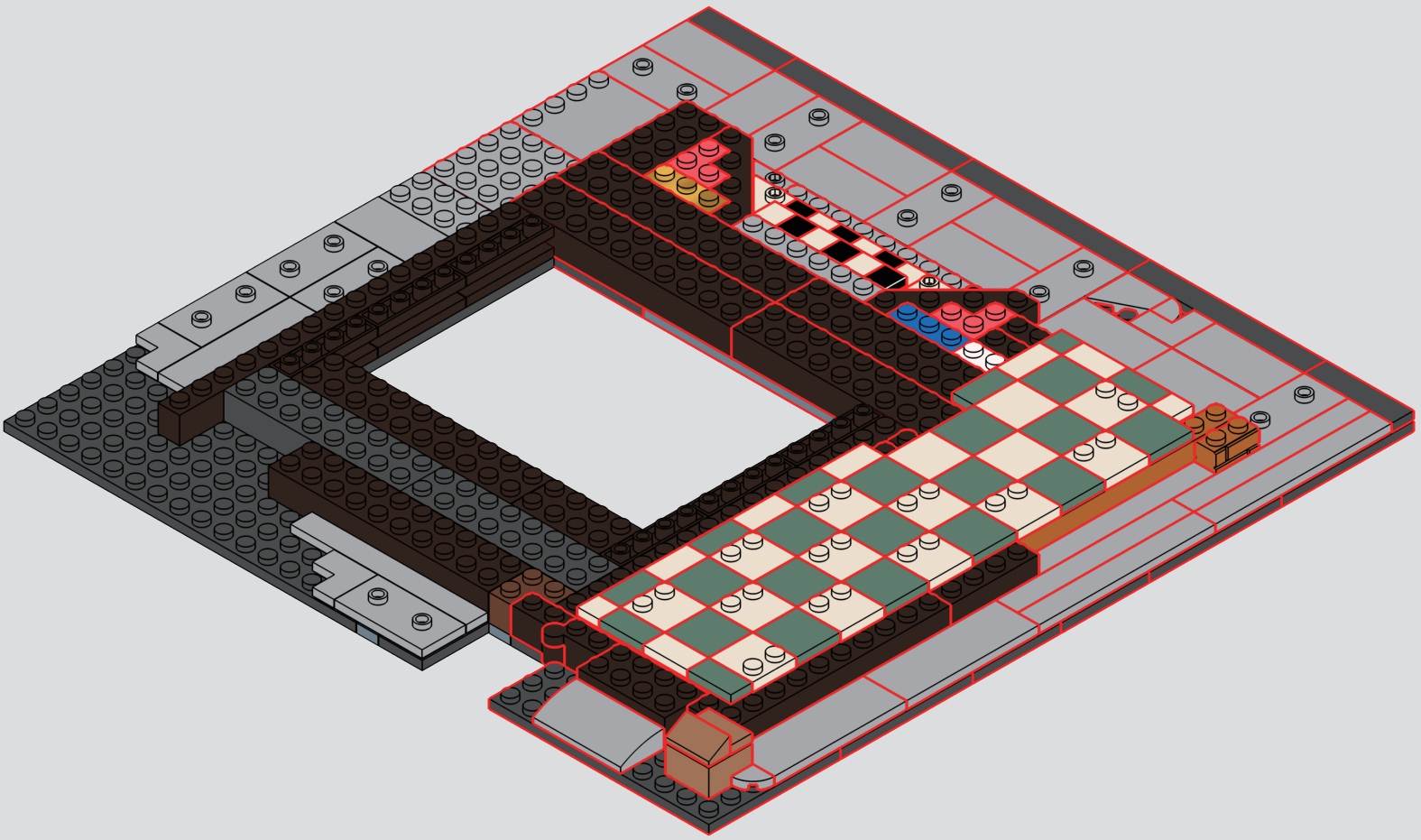

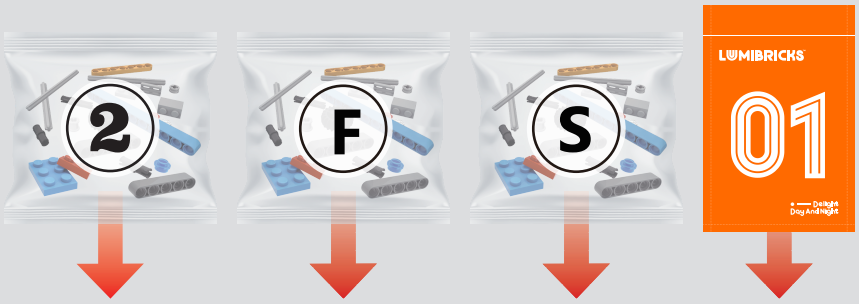
2
F
S
LUMIBRICKS
01


BARBER SHOP

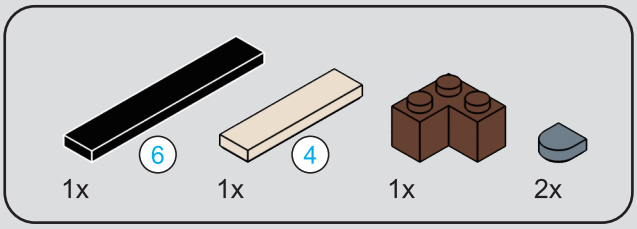

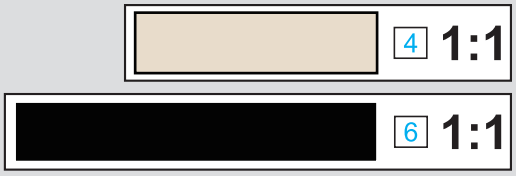

48

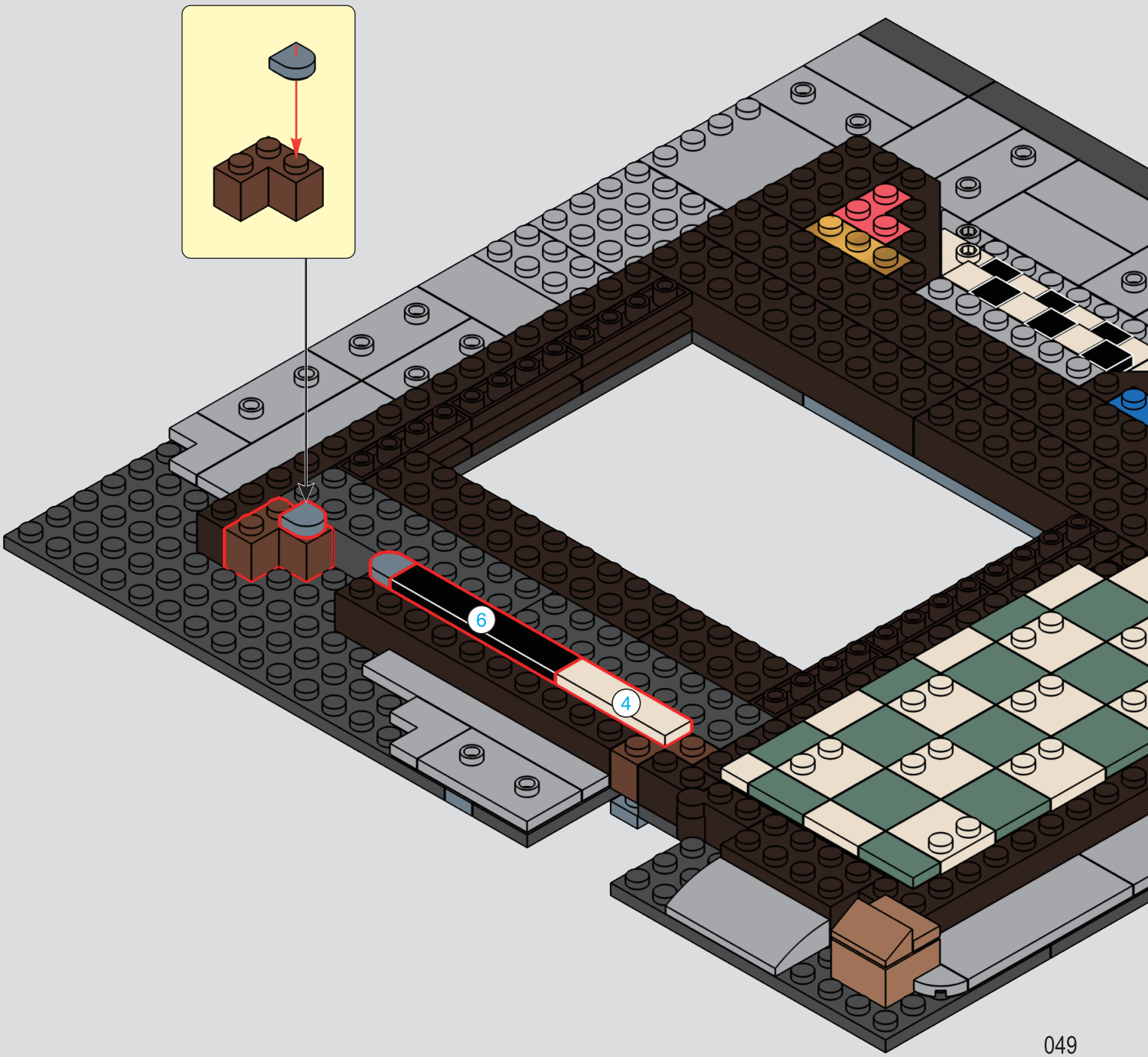

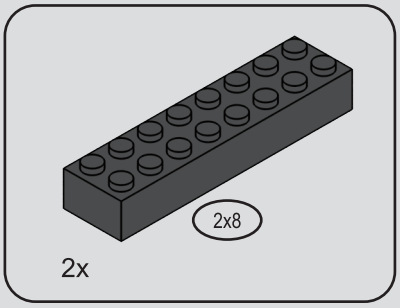

49

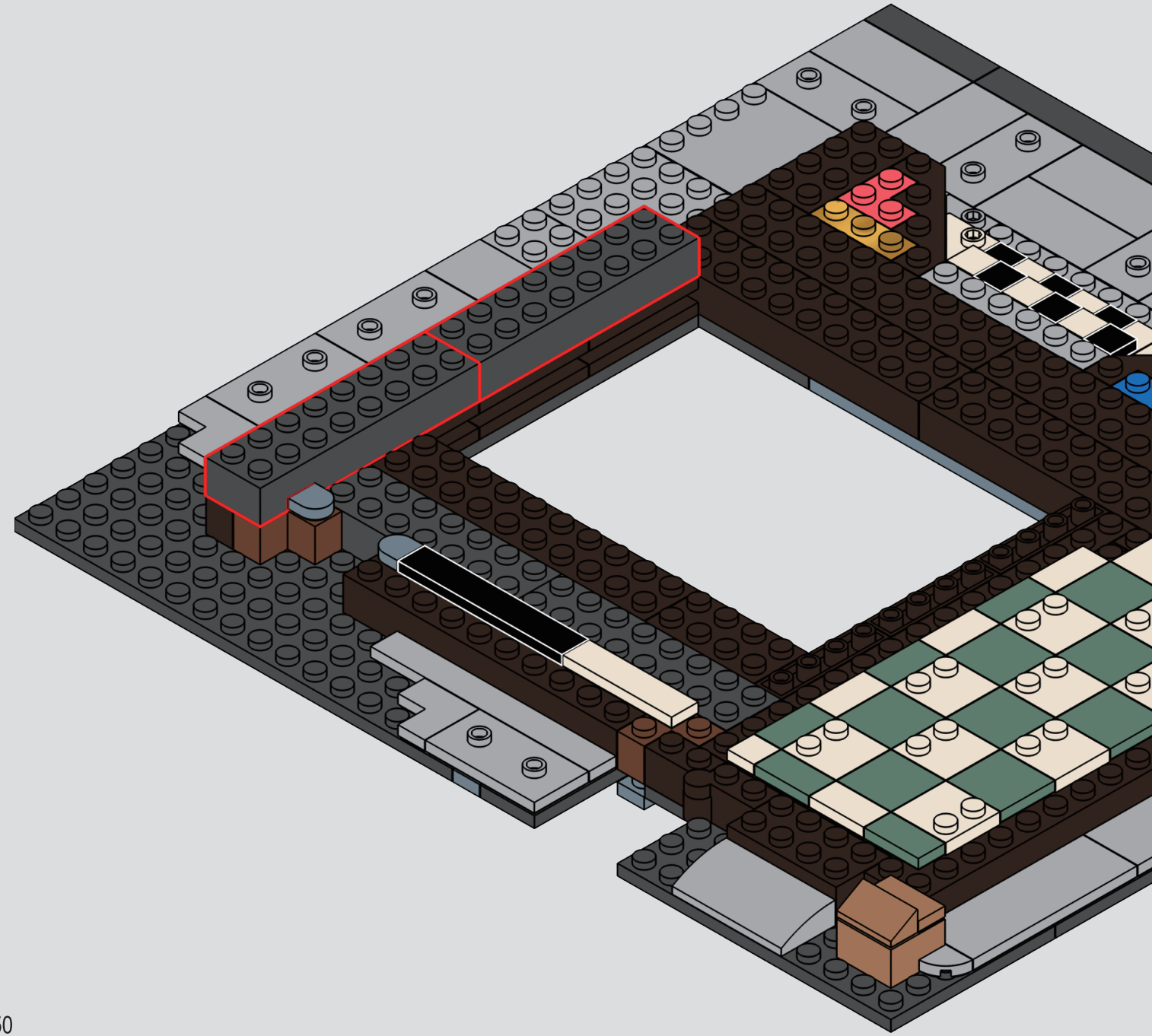



50

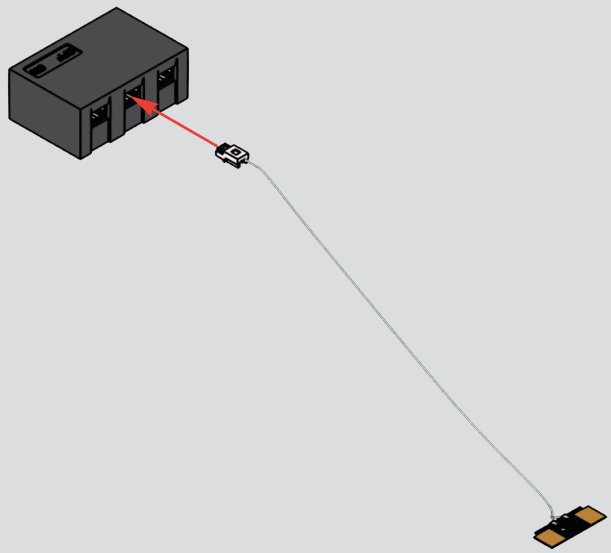

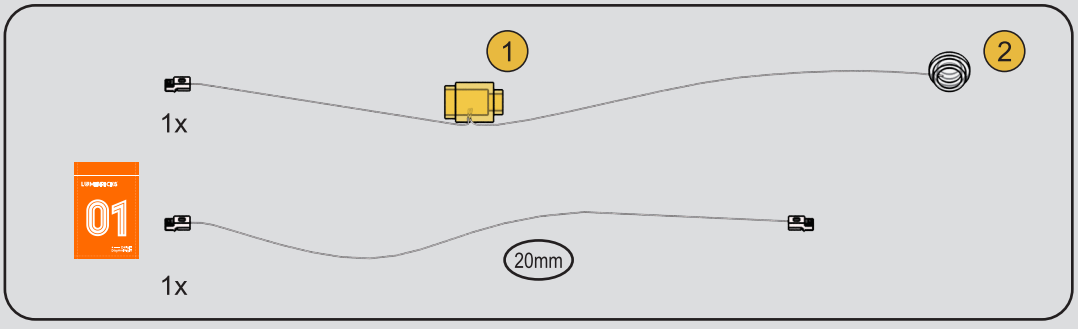

51

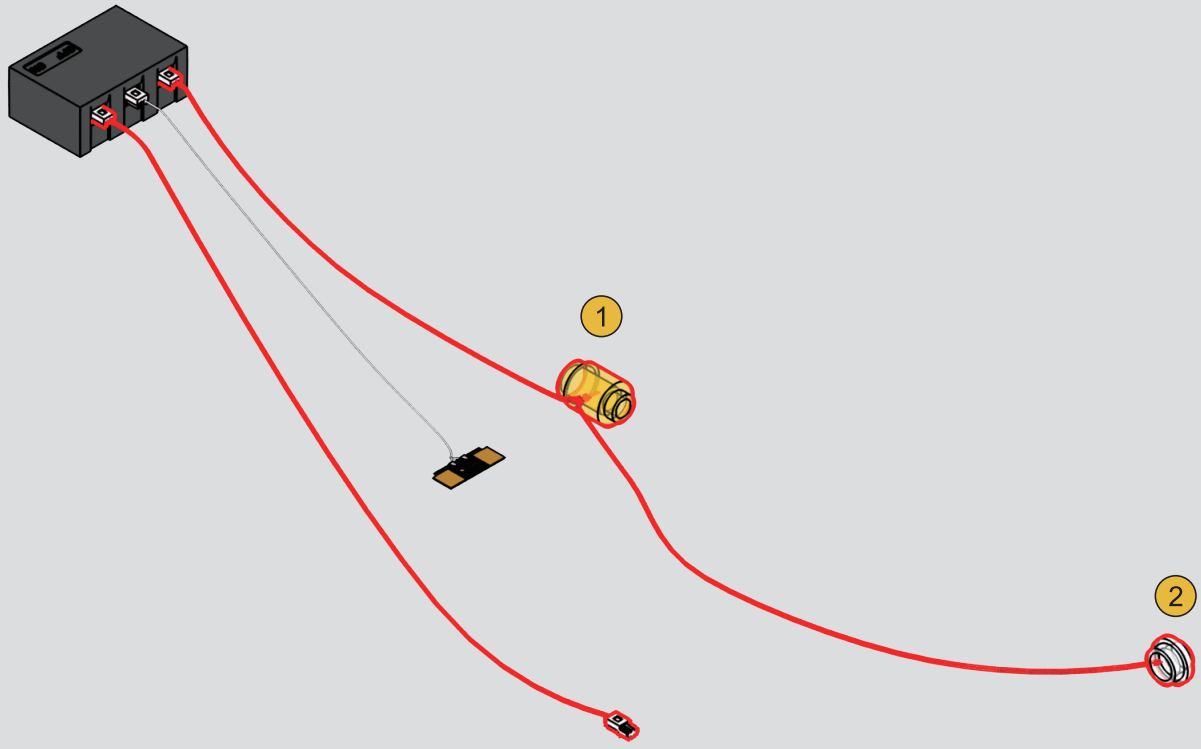

52

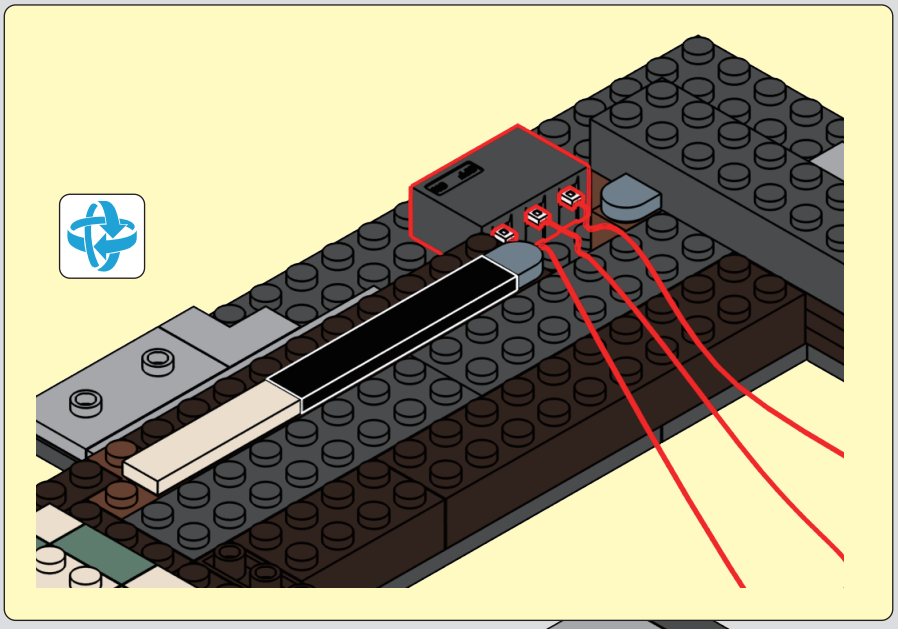

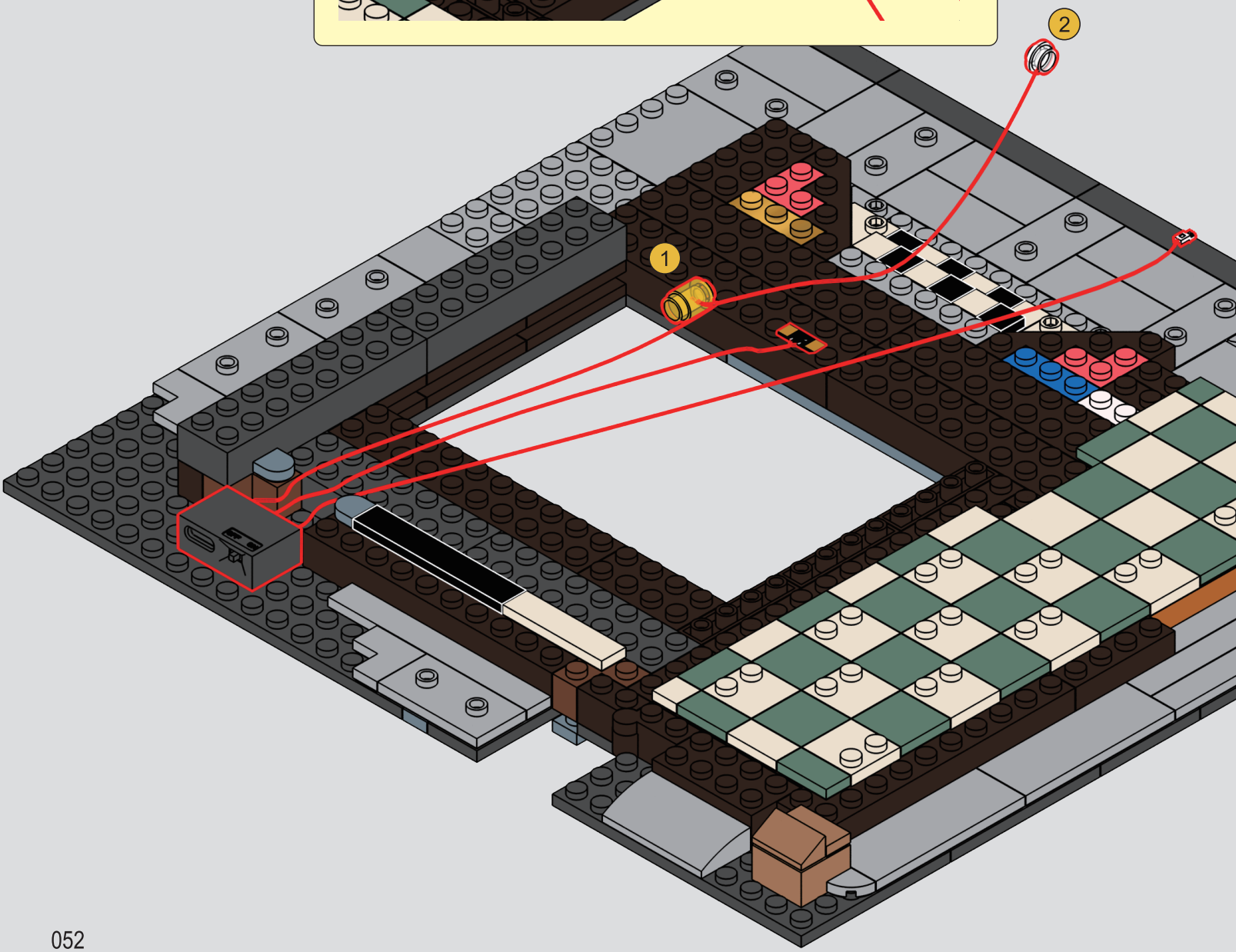

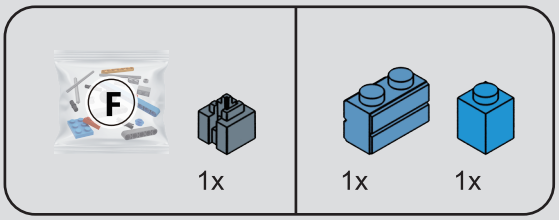
F
1x
1x
1x

53

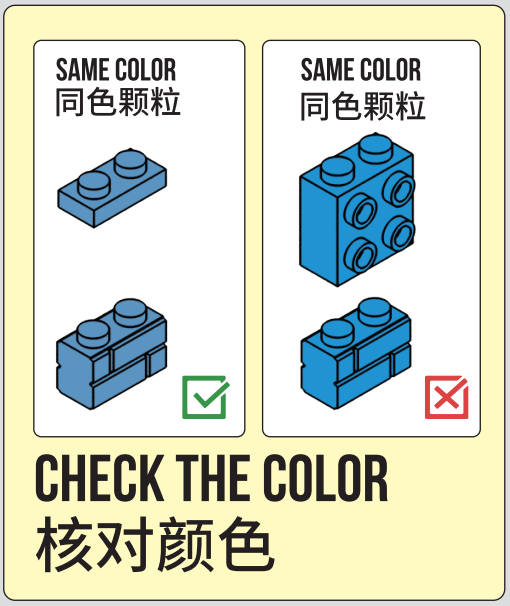
SAME COLOR
同色颗粒
SAME COLOR
同色颗粒
CHECK THE COLOR
核对颜色

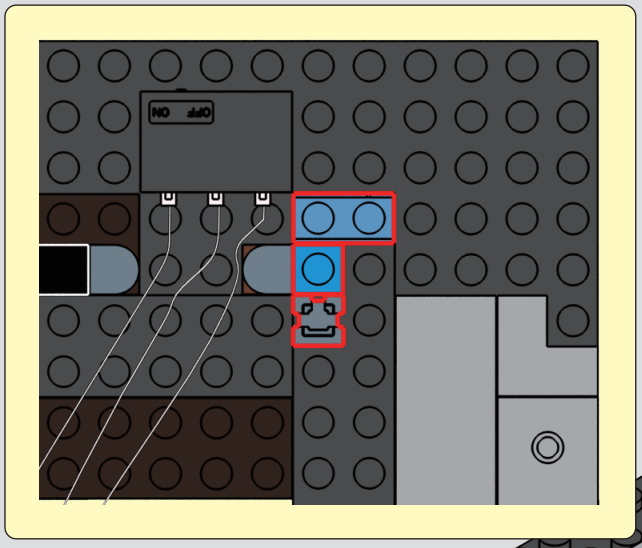



54

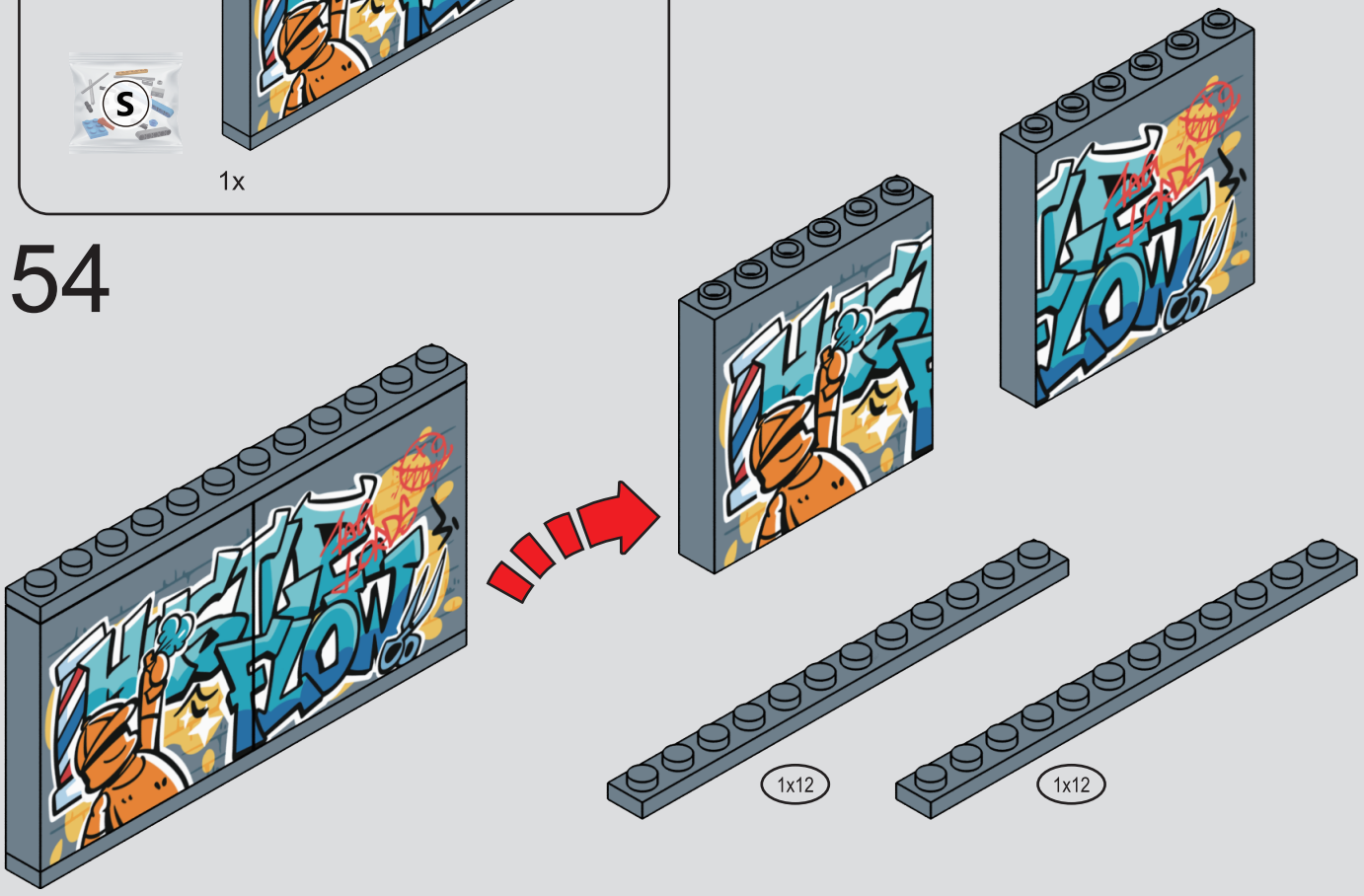

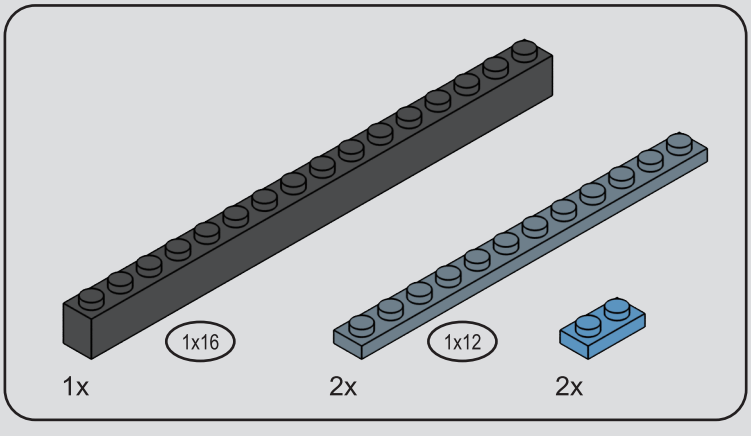

55

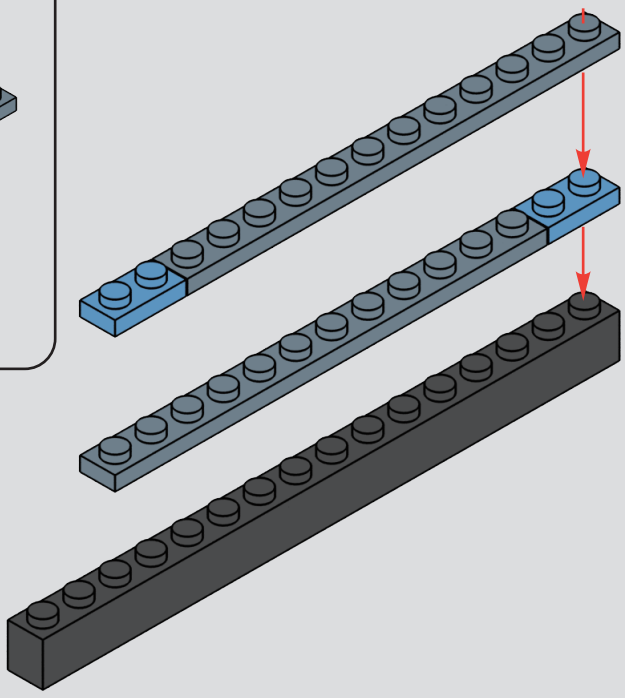

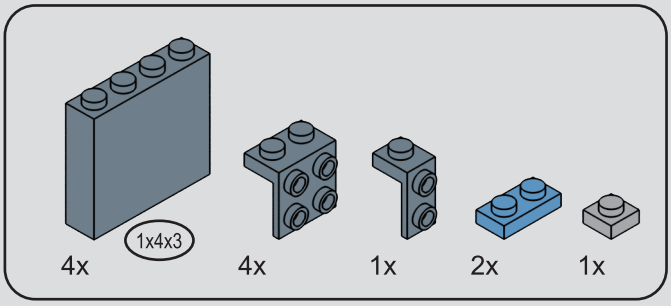

56

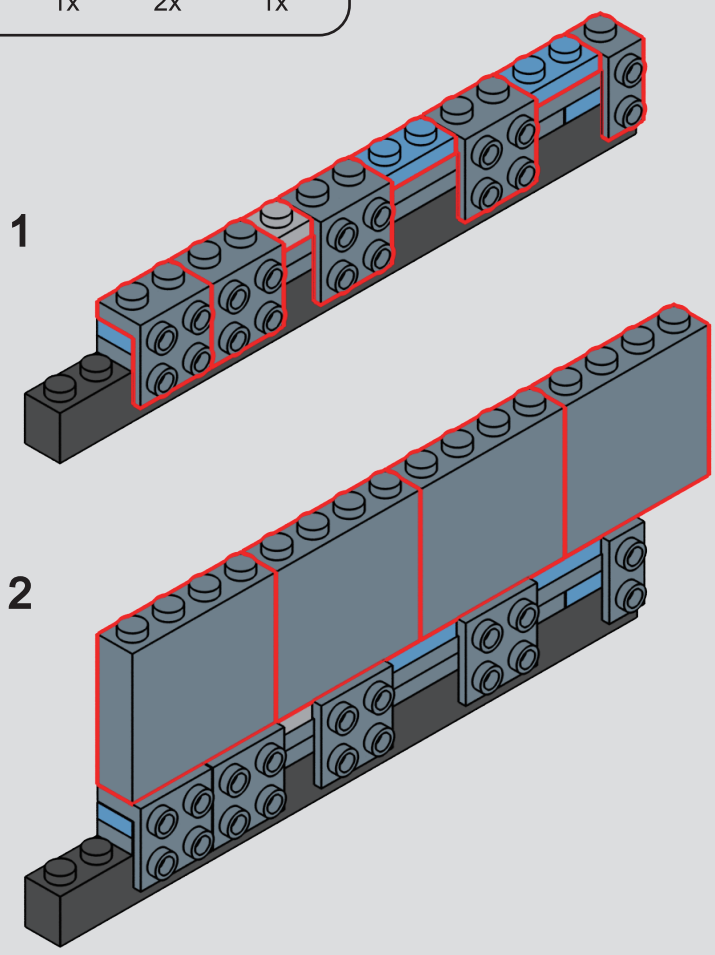

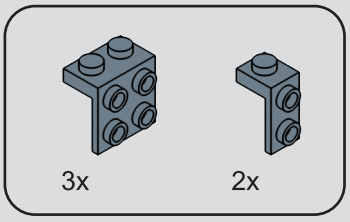

57

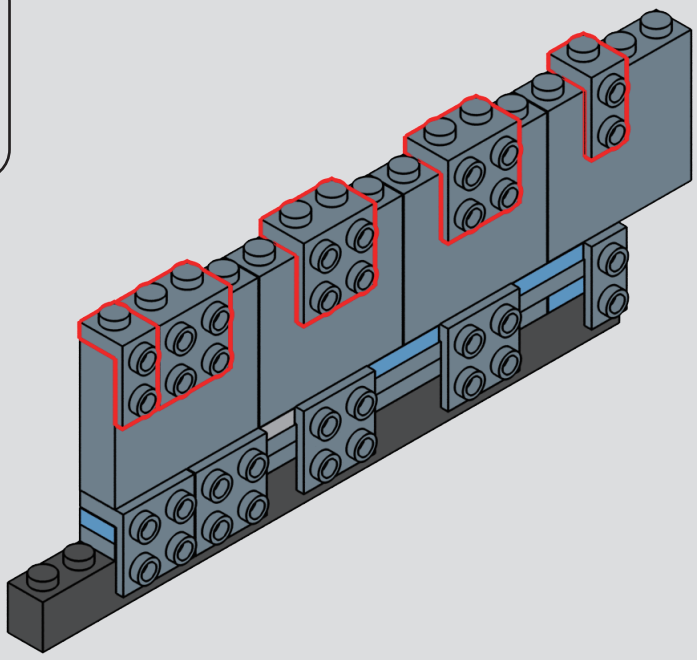

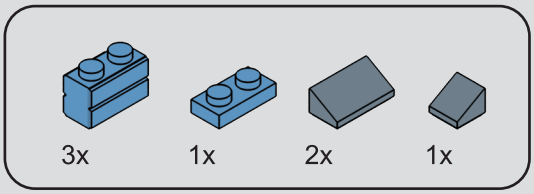
3x
1x
2x
1x

58

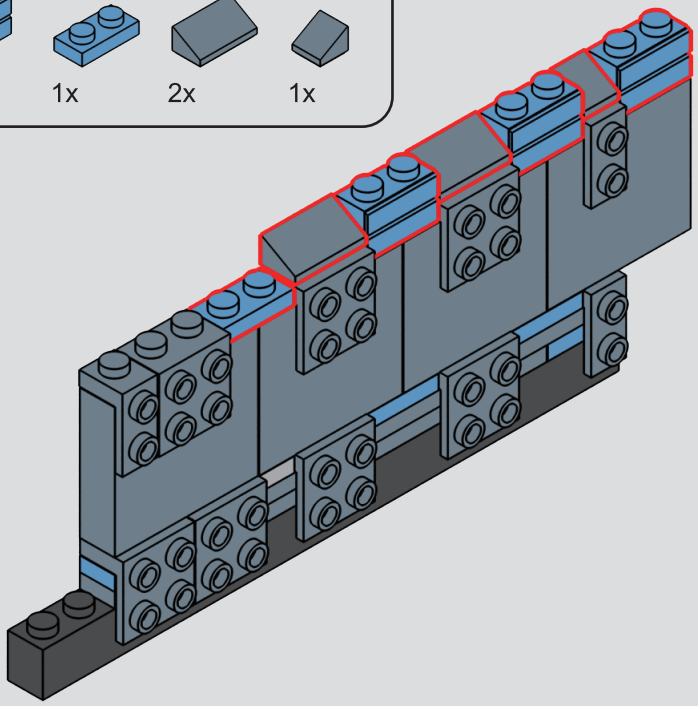

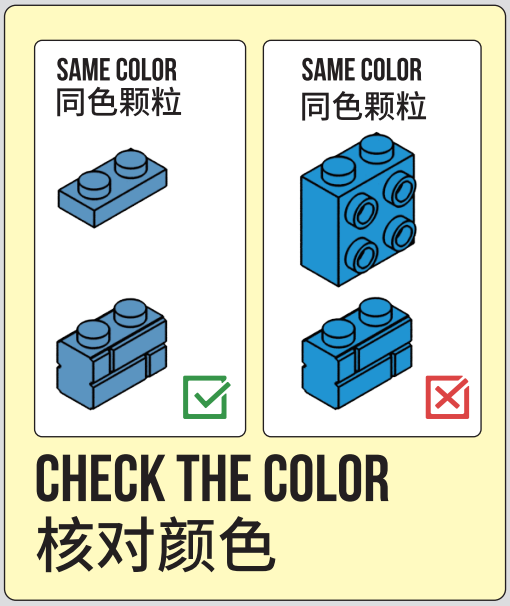
SAME COLOR
同色颗粒
SAME COLOR
同色颗粒
CHECK THE COLOR
核对颜色

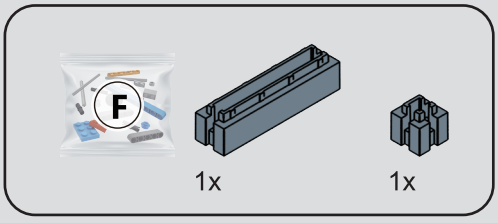
F
1x
1x

59

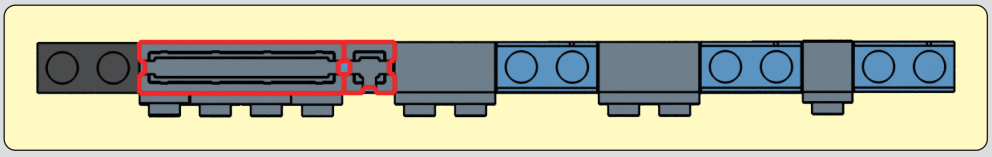

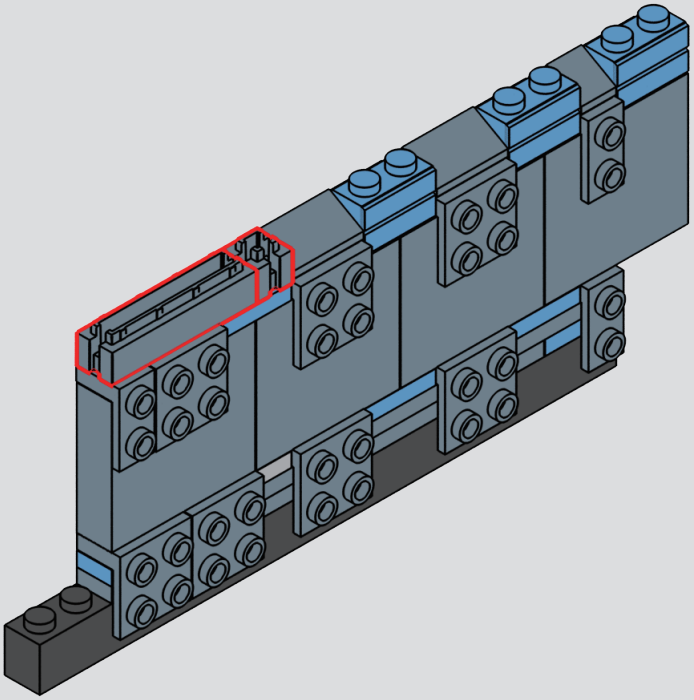

60

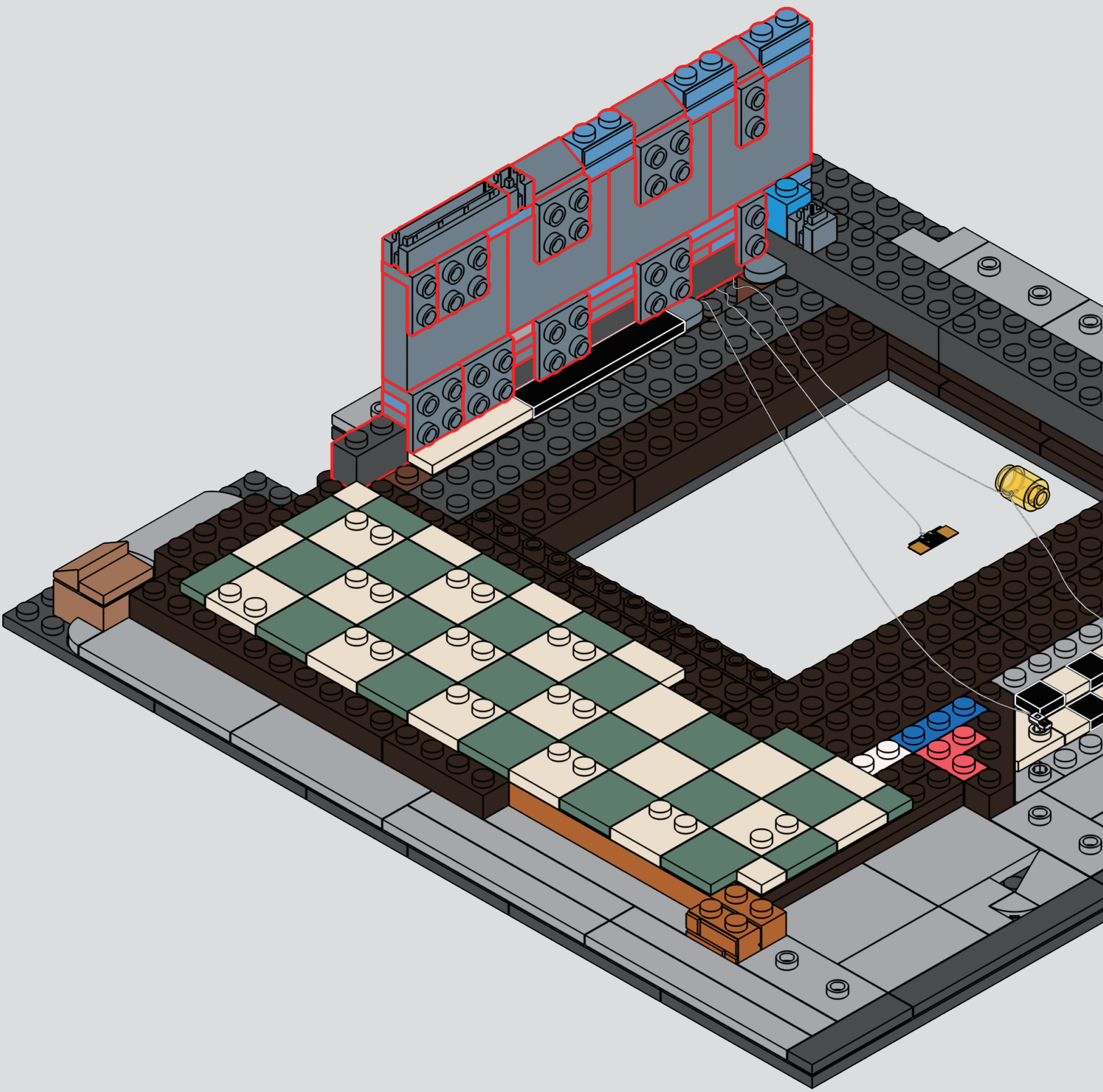

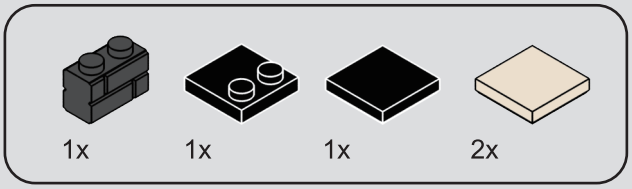

61

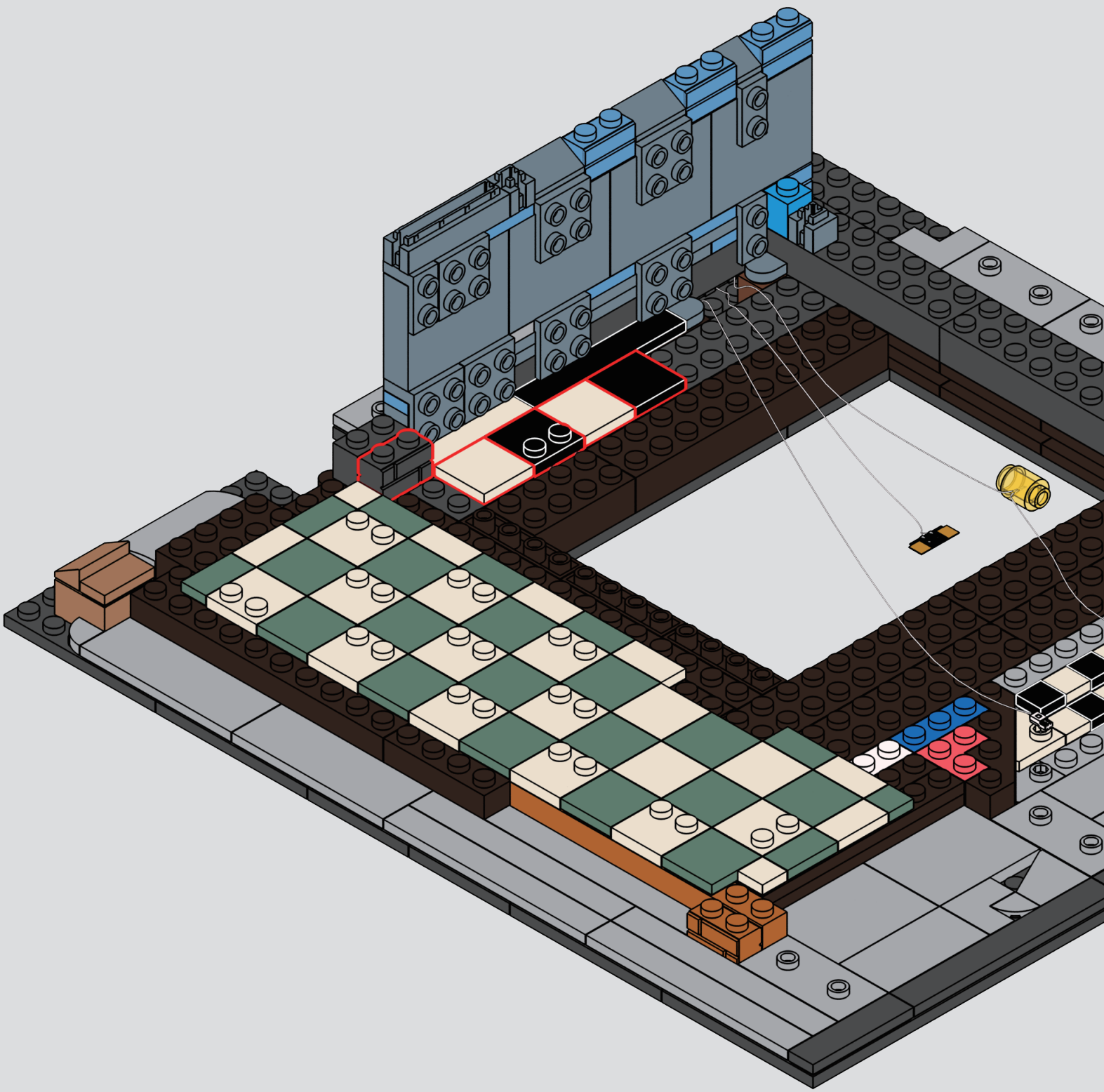

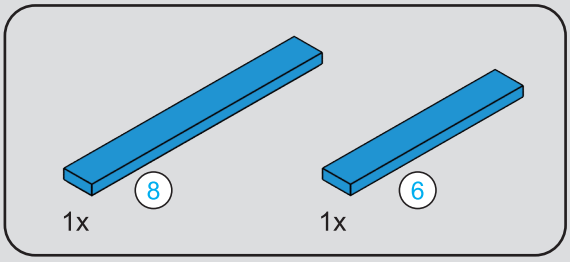

62

1

2

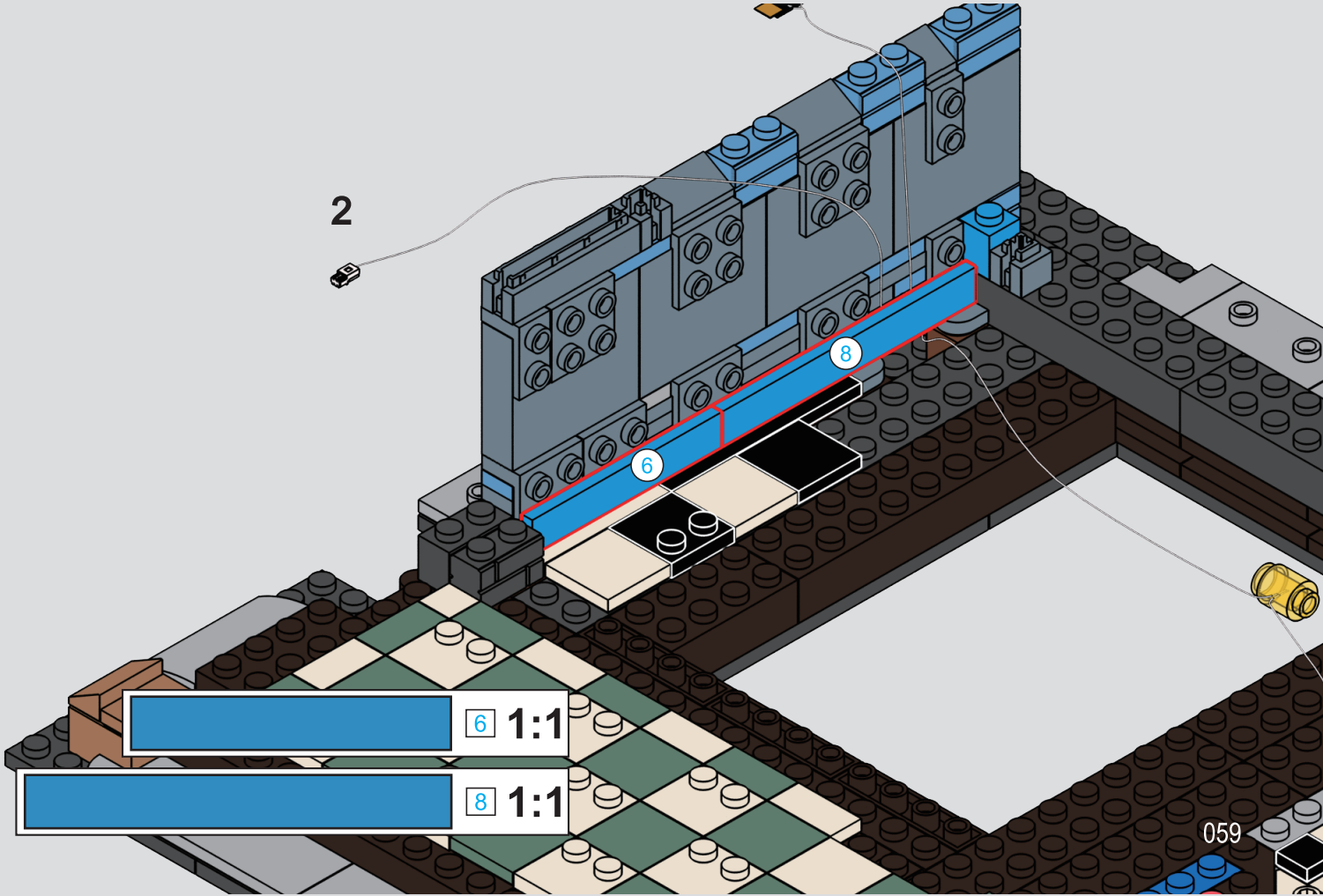

1x

63

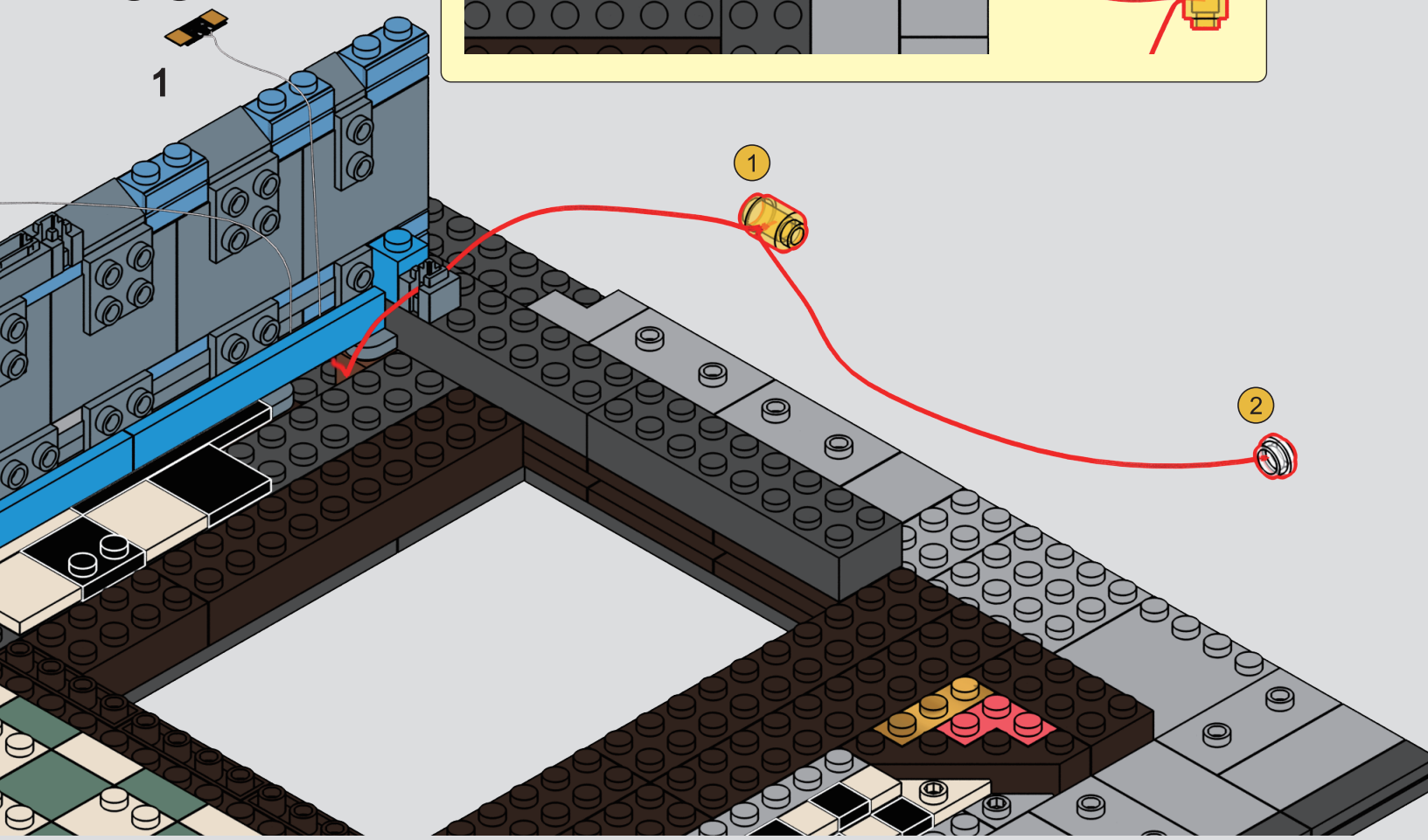

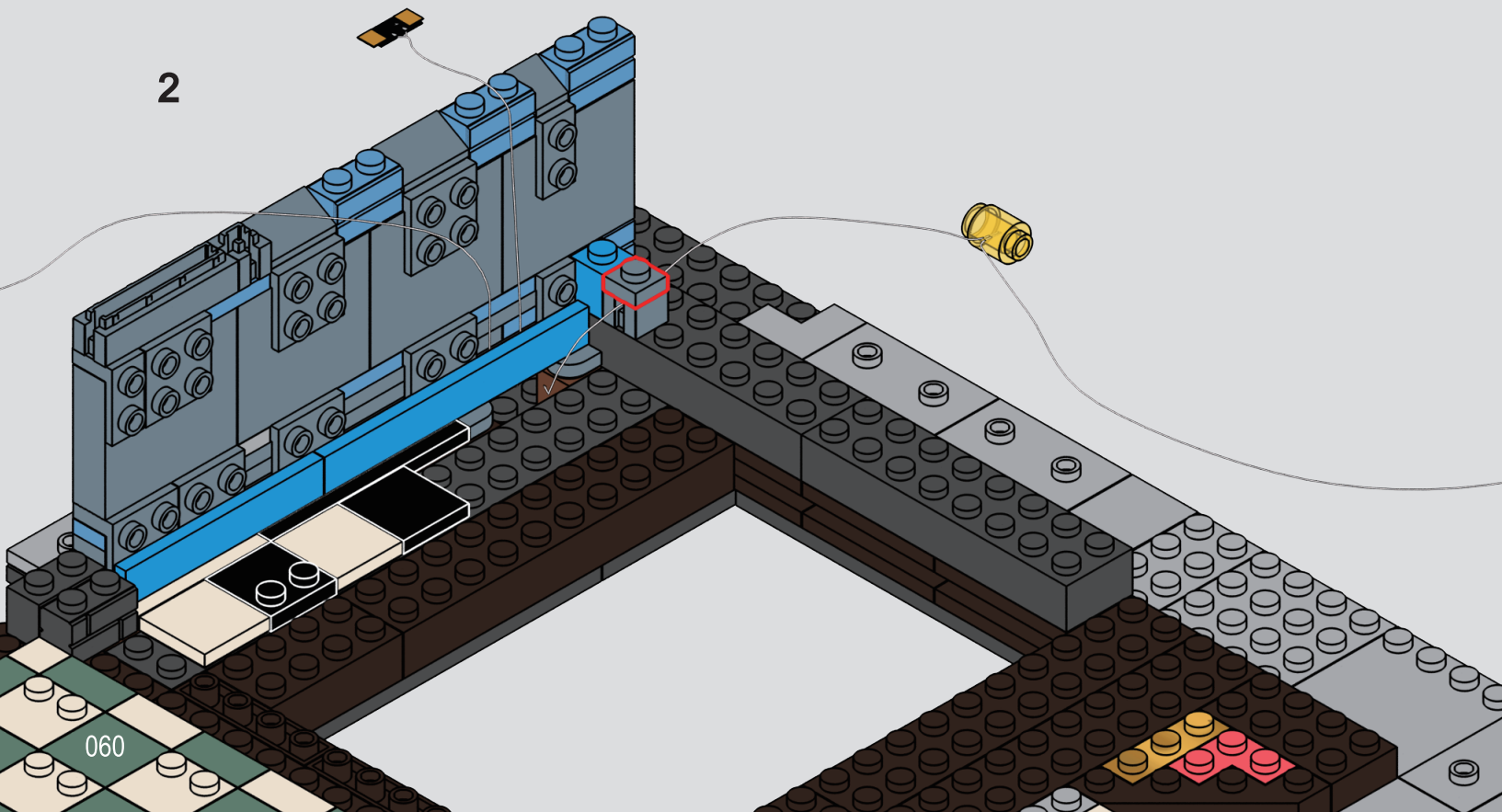

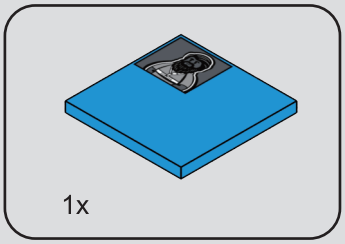

64

1

2

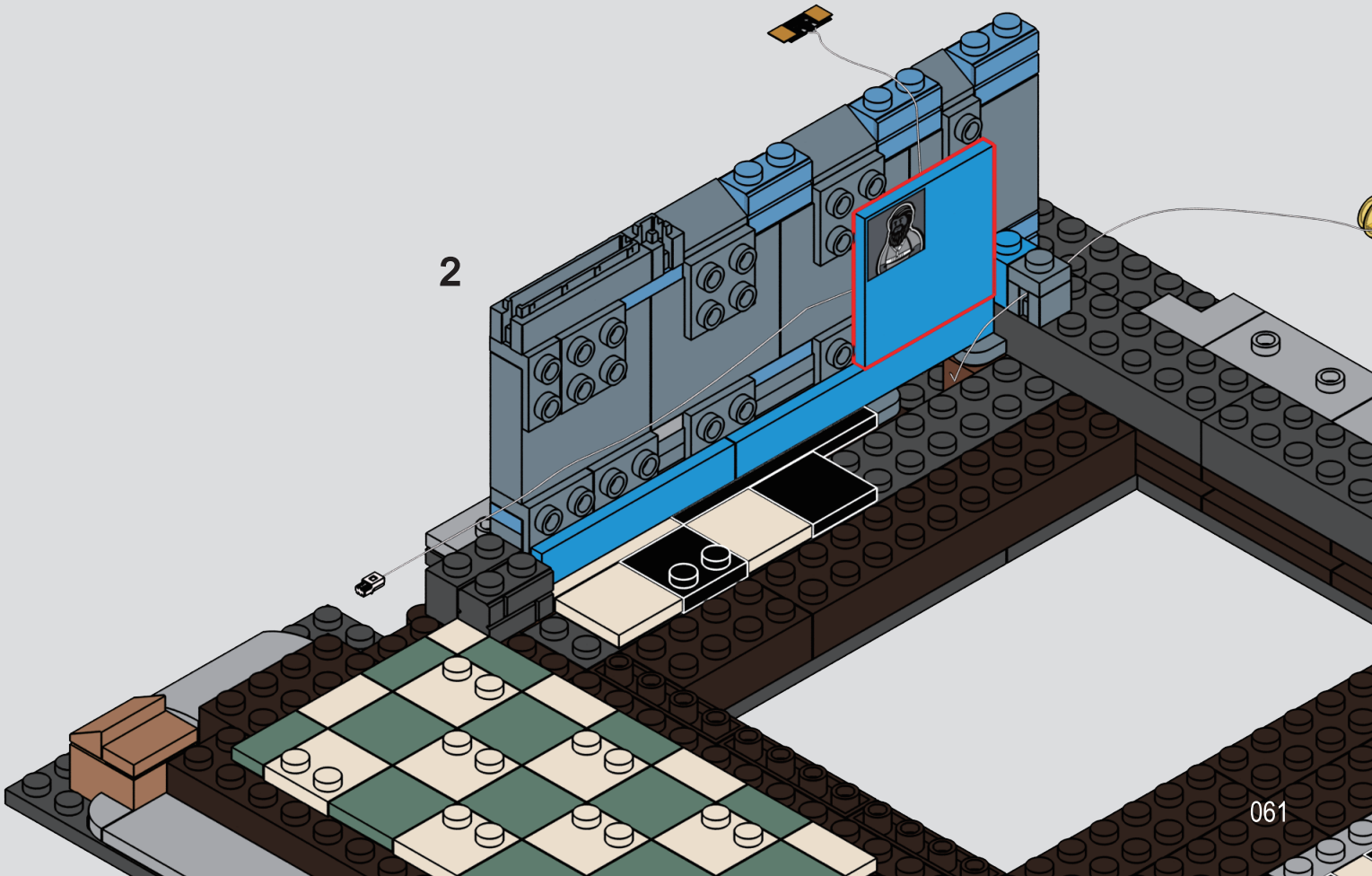

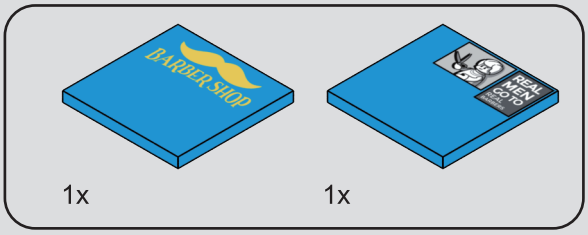

65

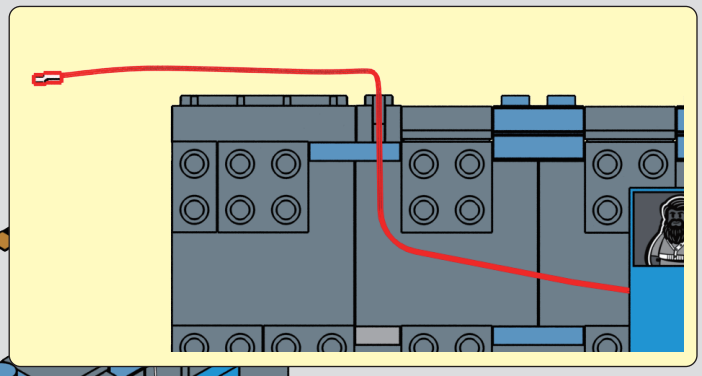

1

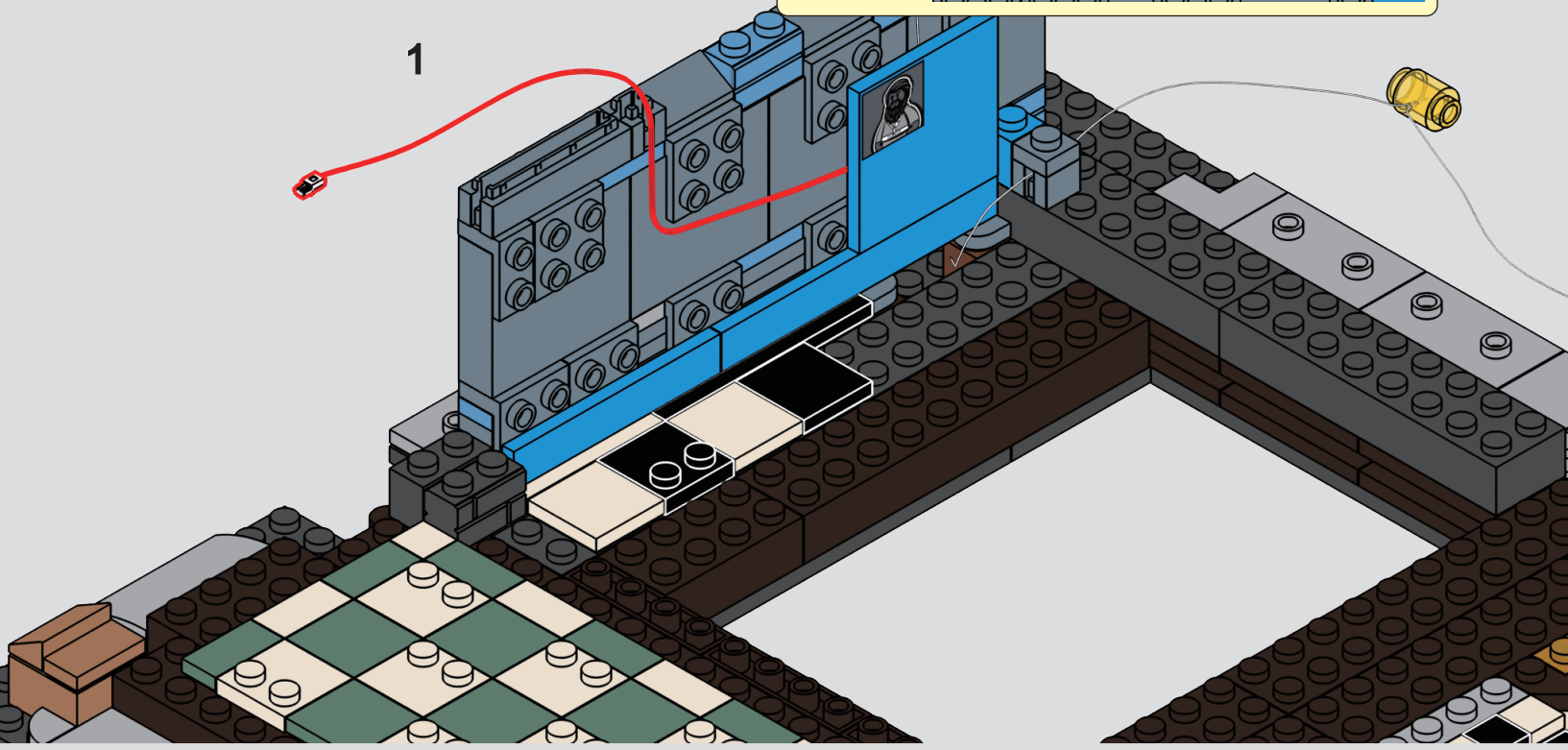

2

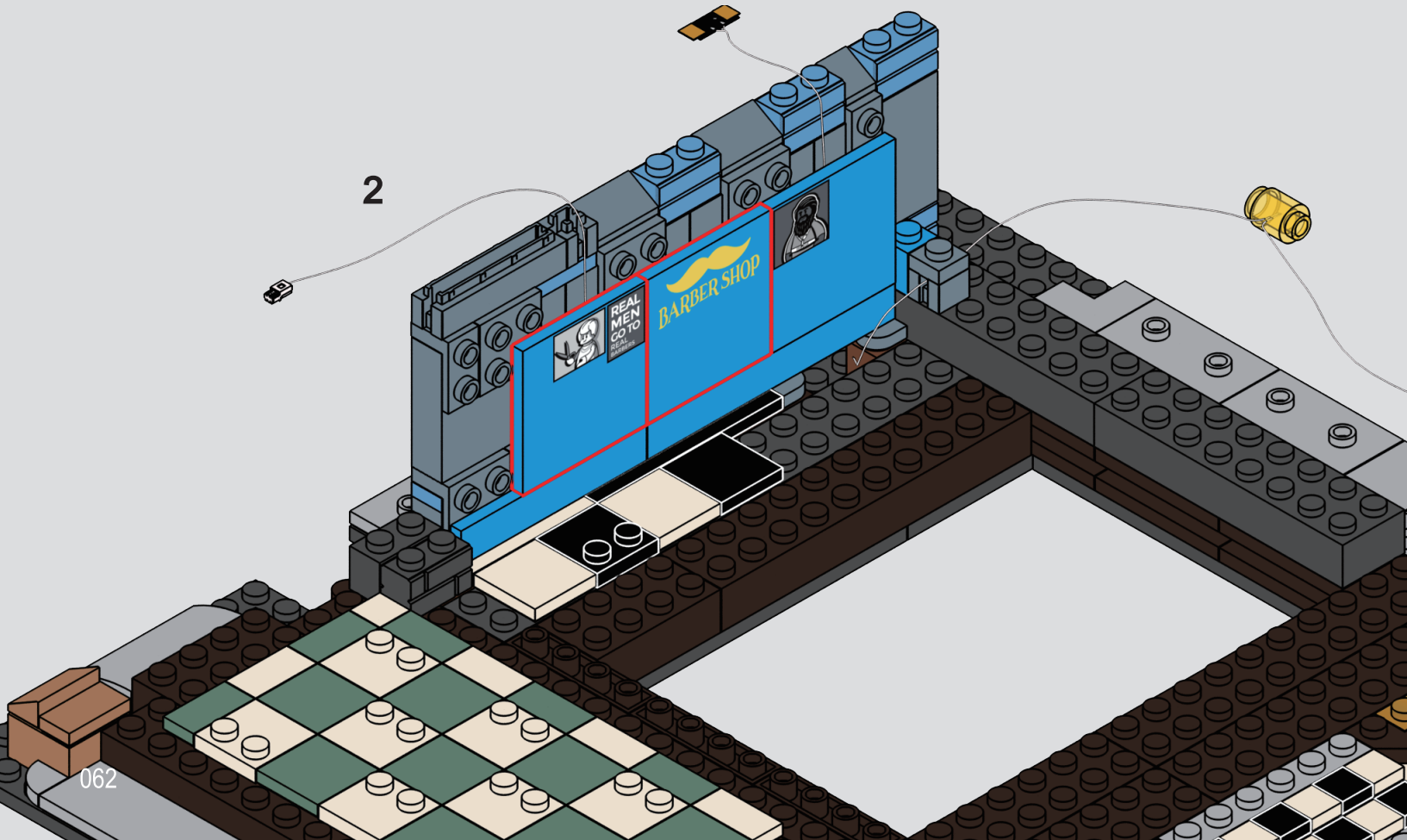

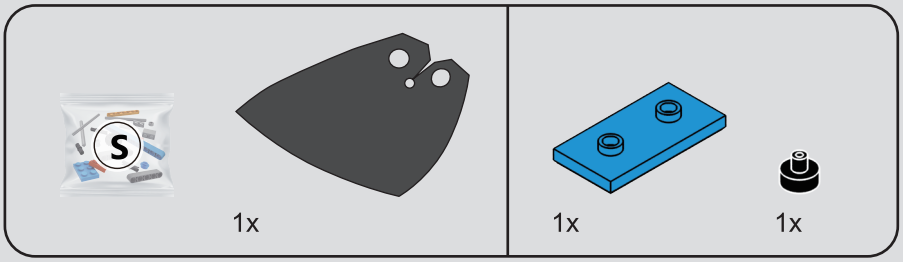

66

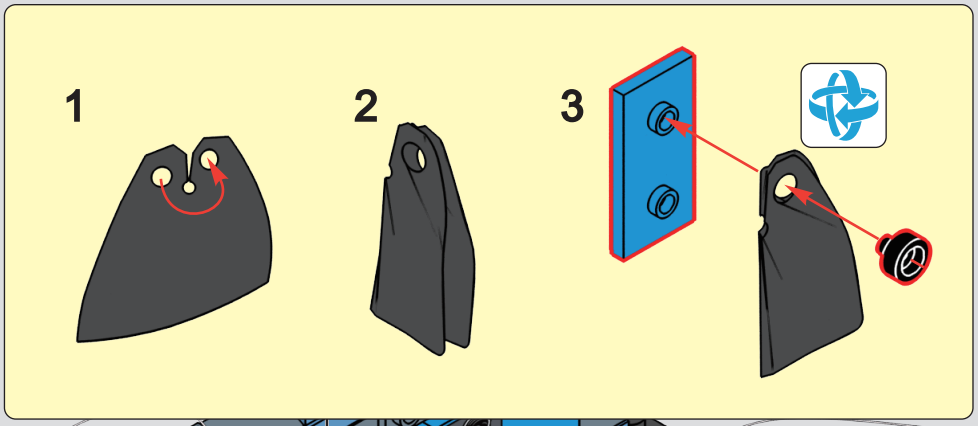

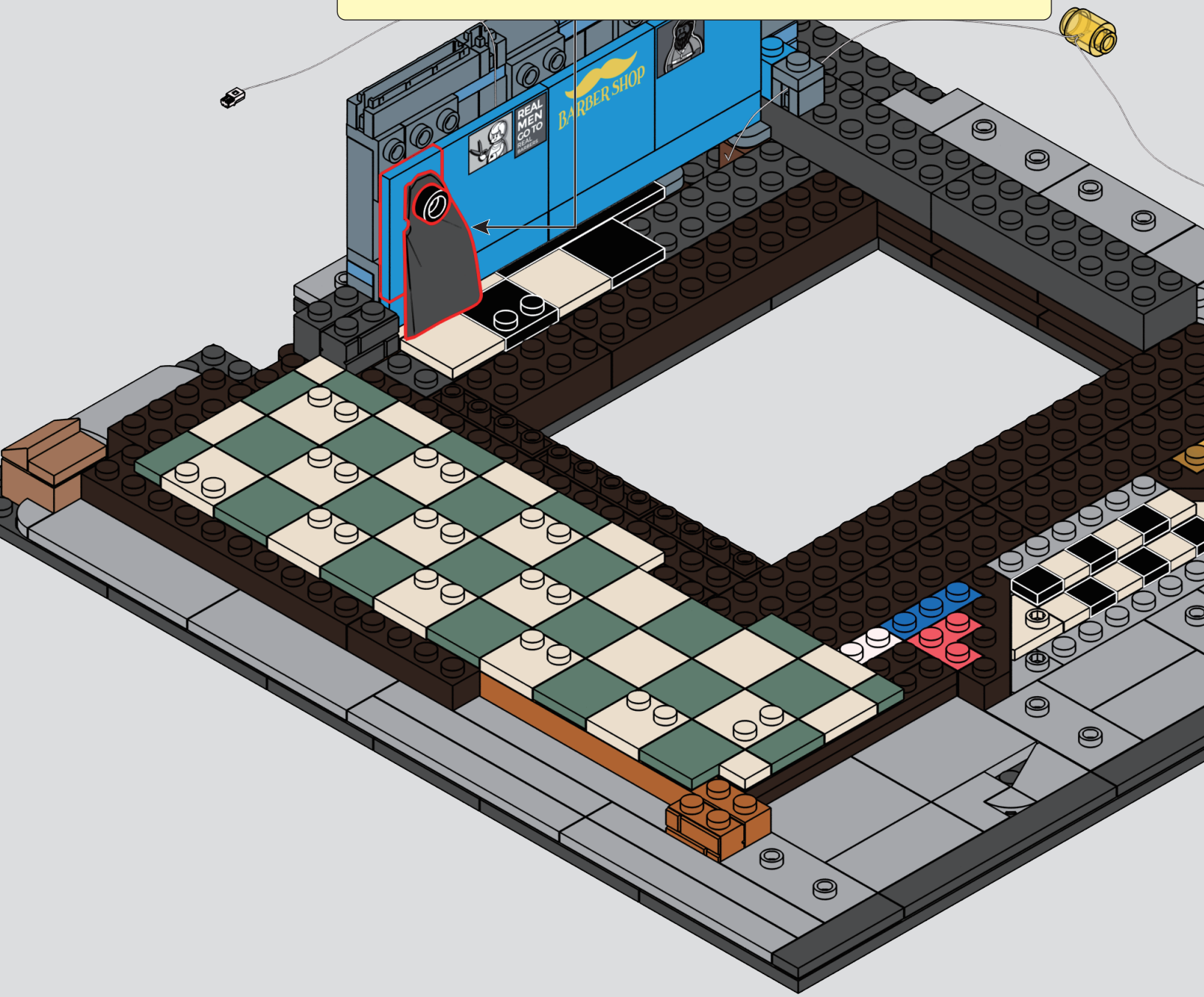

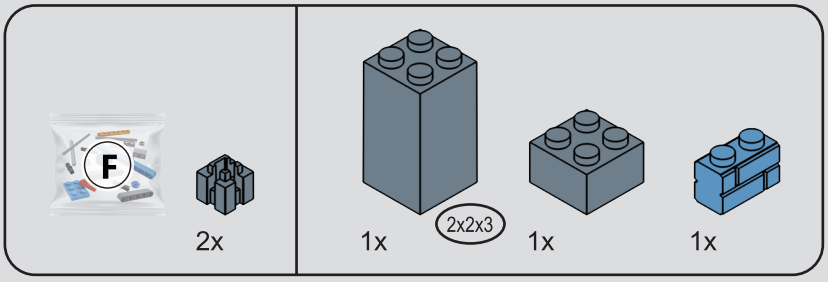
F
2x
1x
2x2x3
1x
1x

67

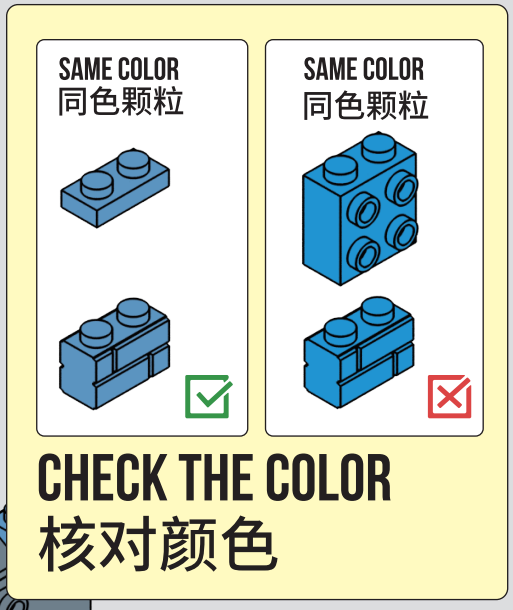
SAME COLOR
同色颗粒
SAME COLOR
同色颗粒
CHECK THE COLOR
核对颜色

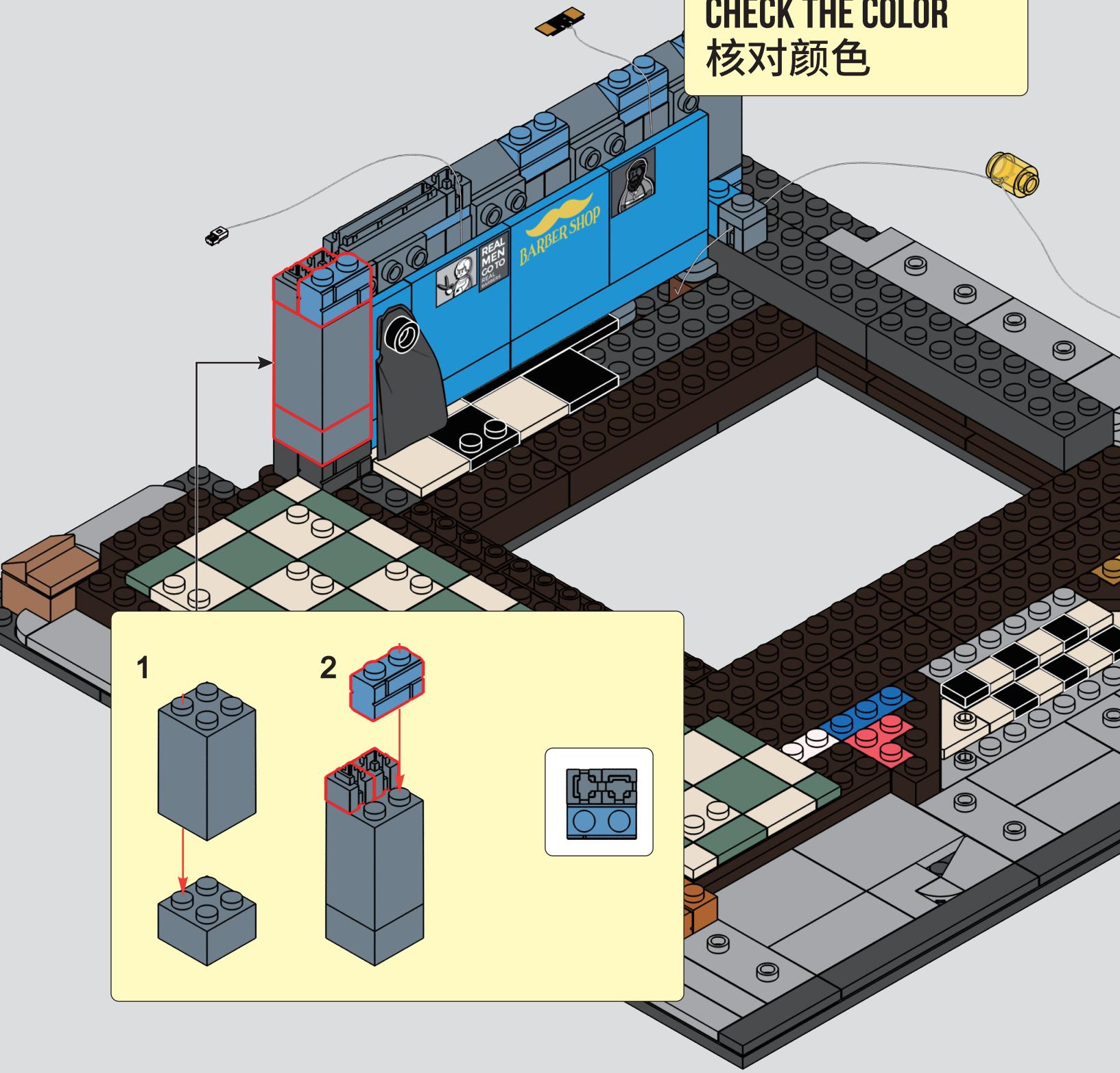
BARBER SHOP
REAL MEN GO TO REAL BARBERS

1
2

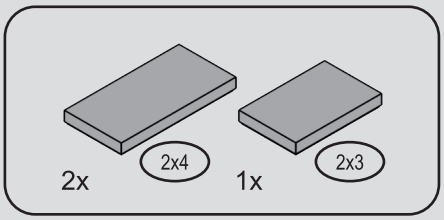

68

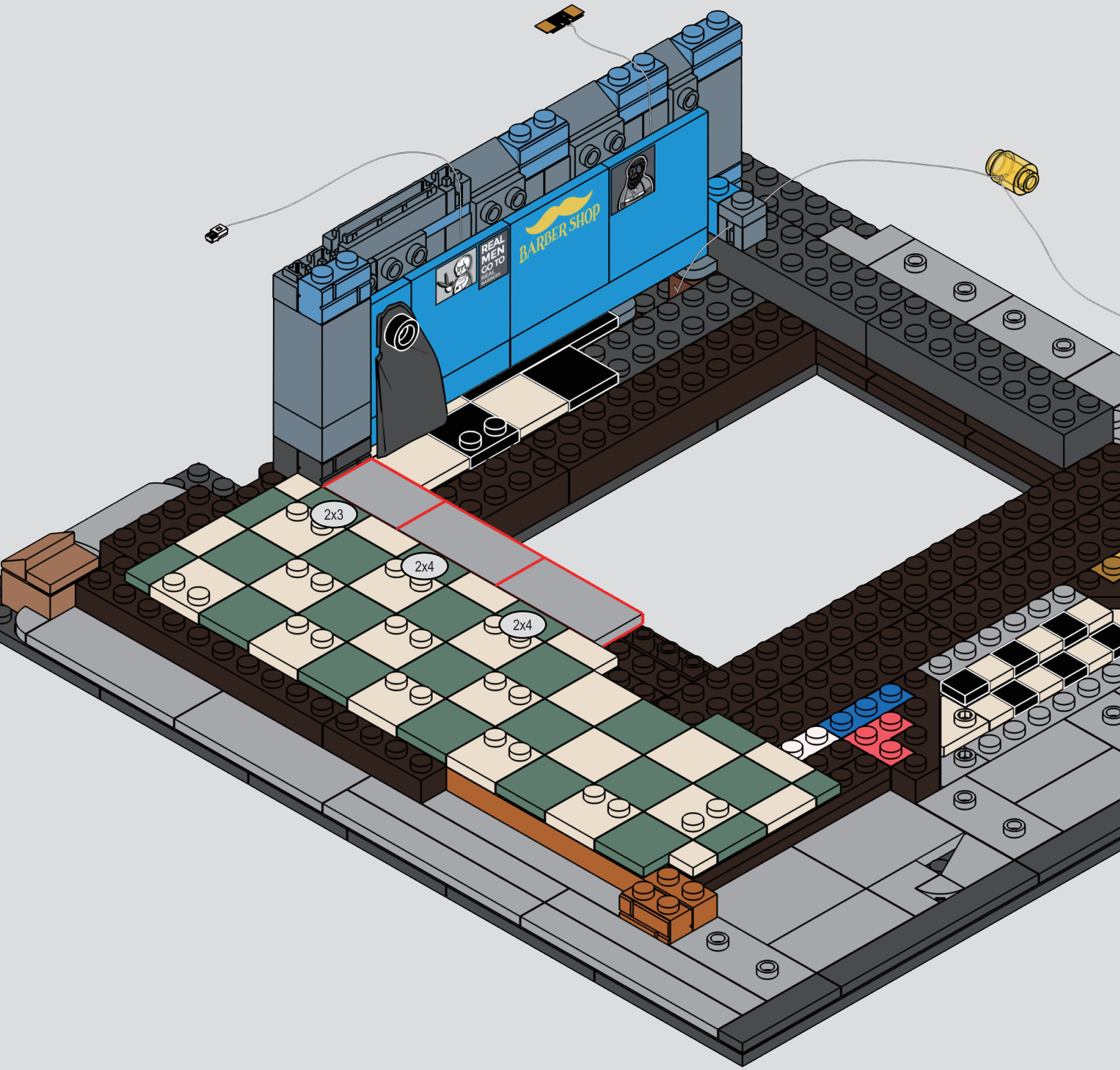

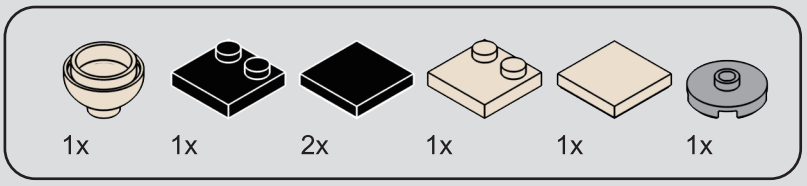

69

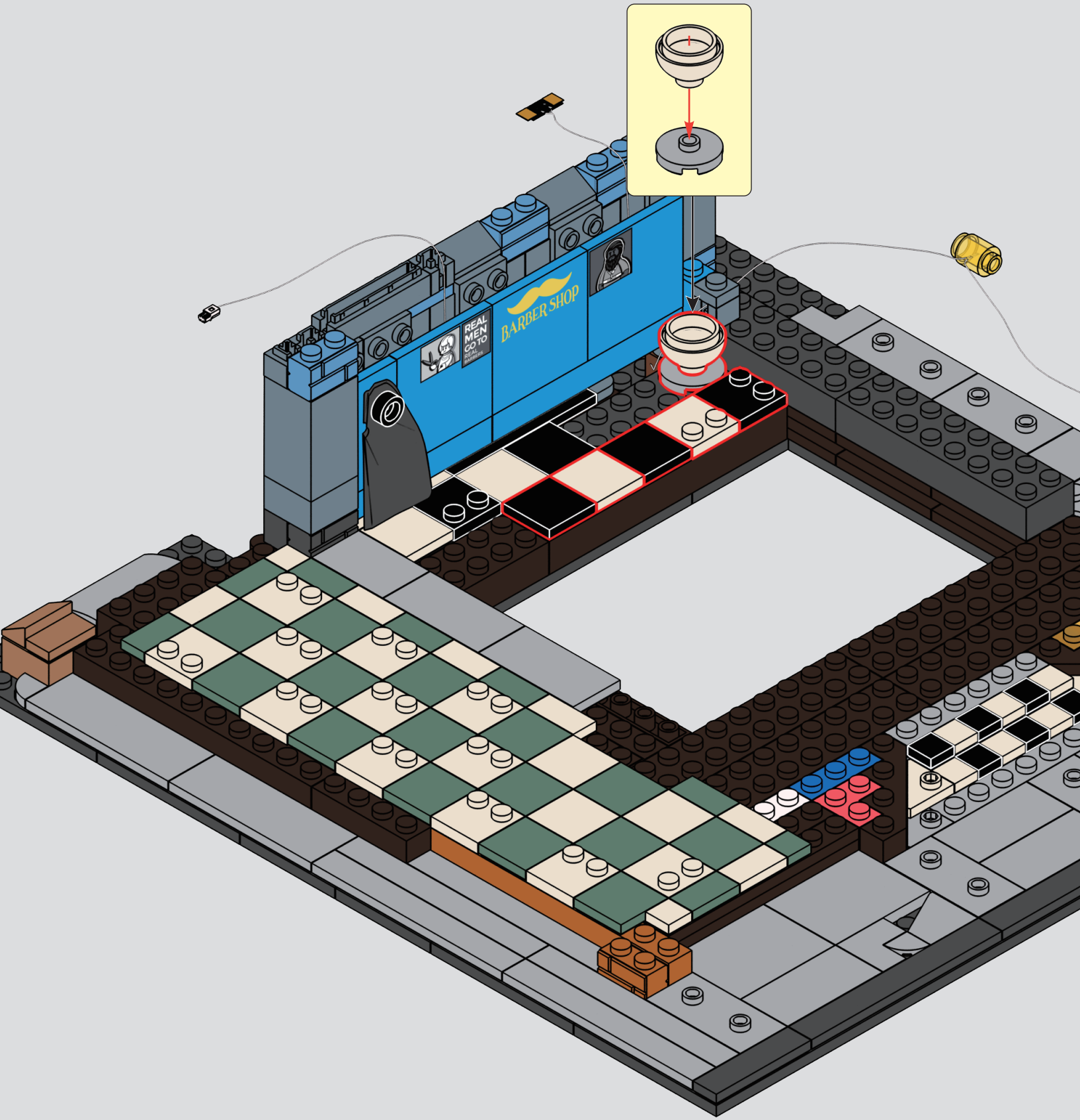

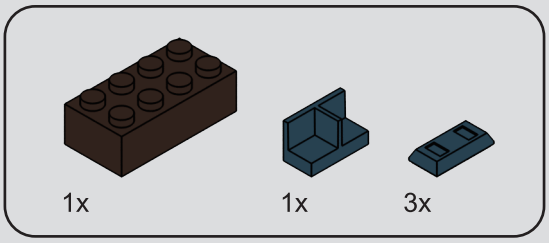

70

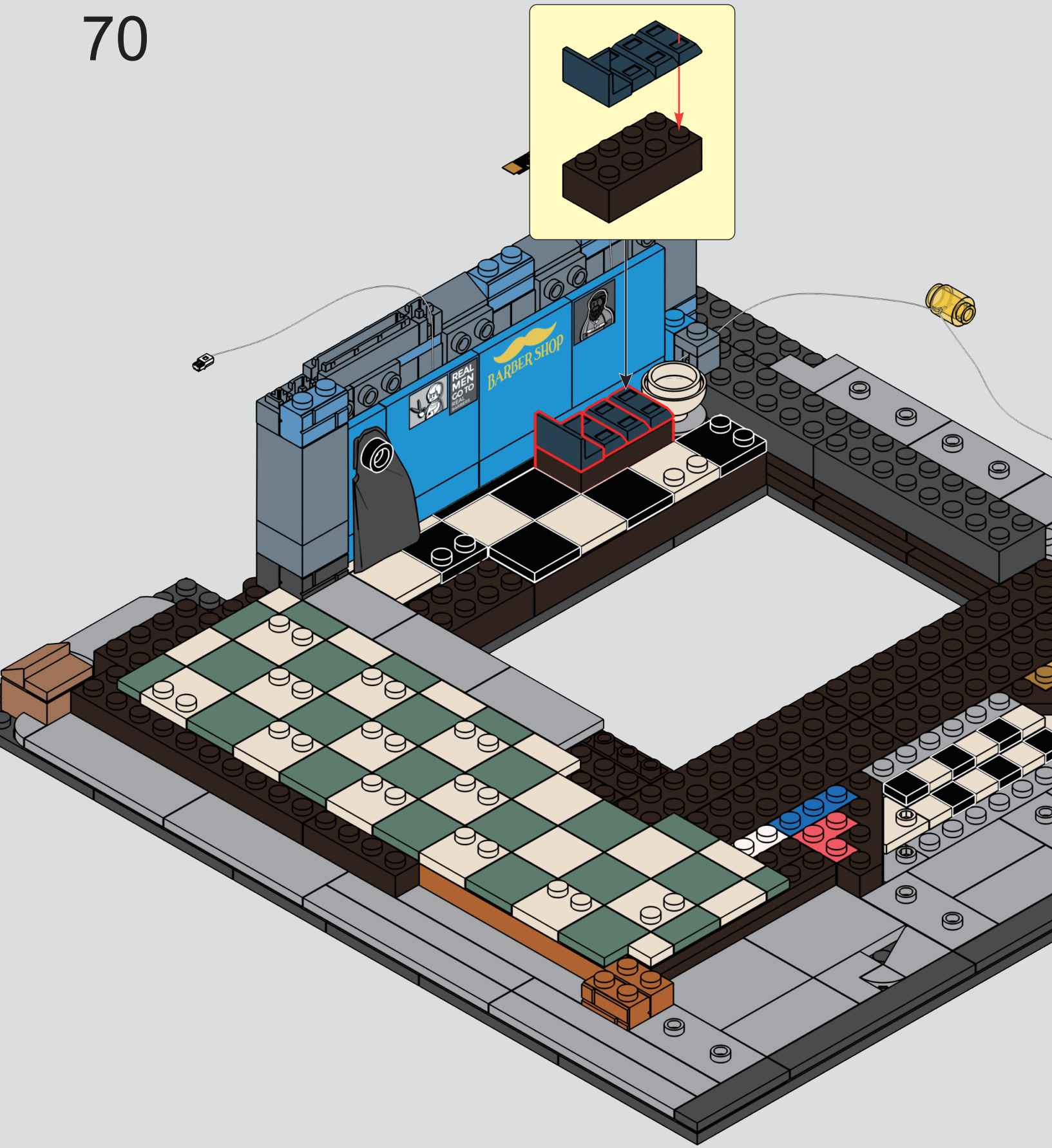

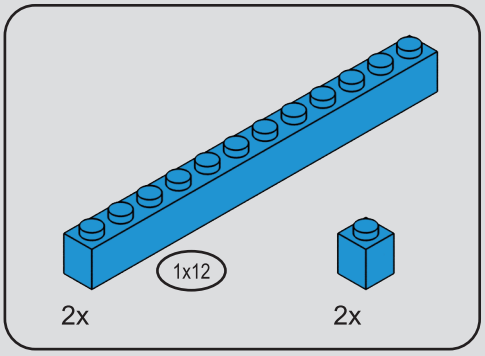

71

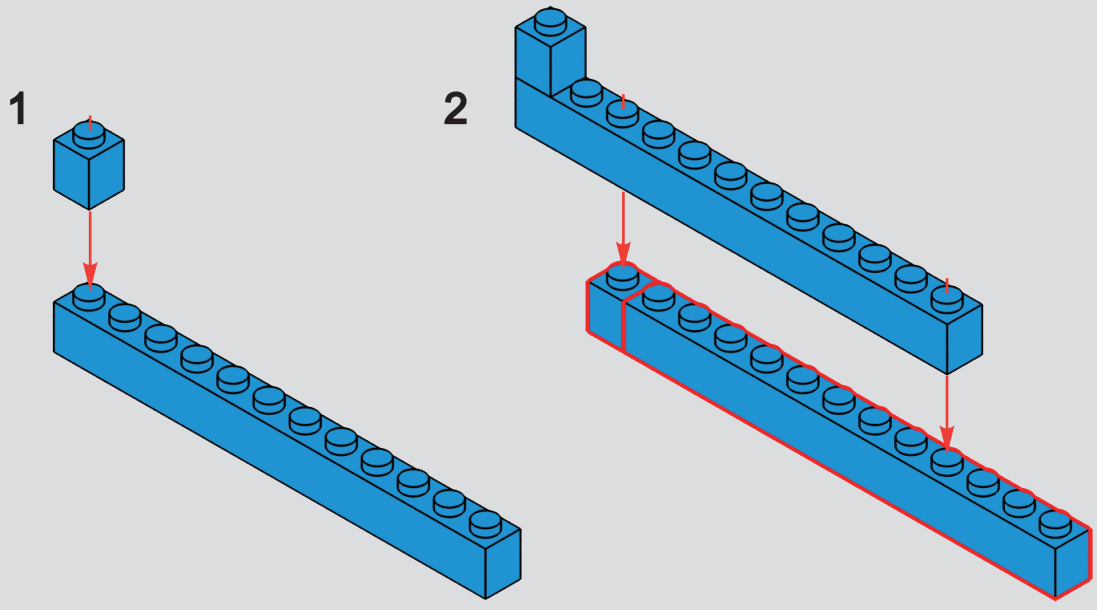

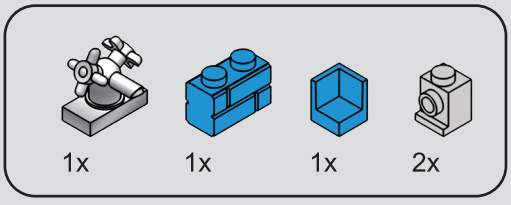

72

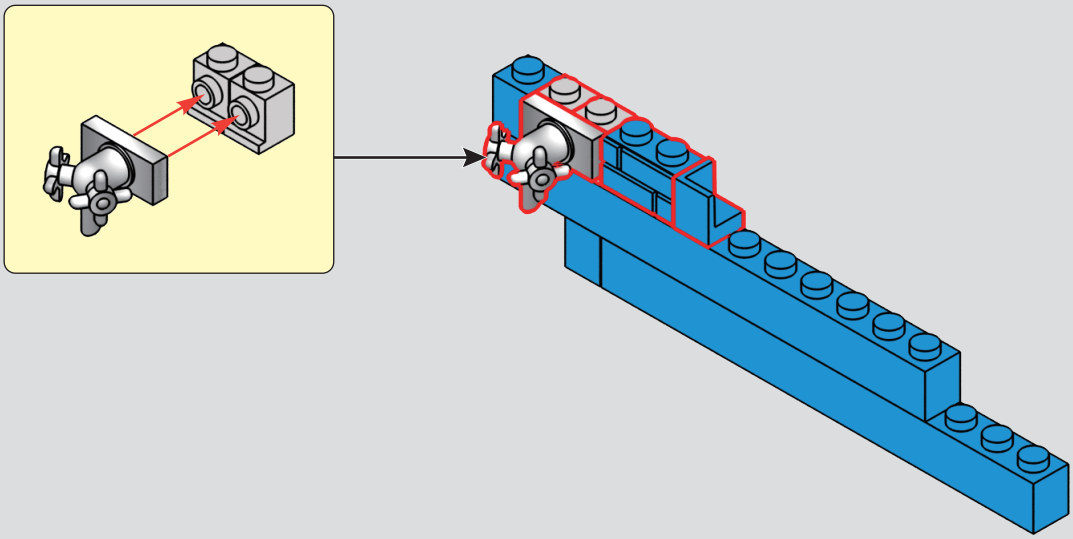

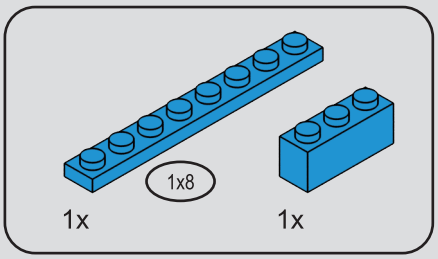

73

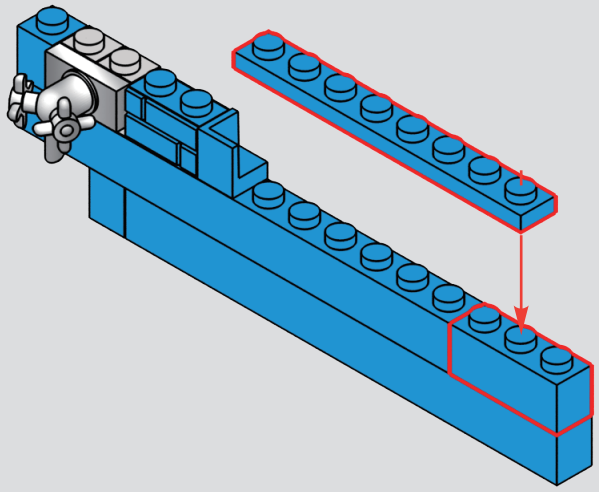

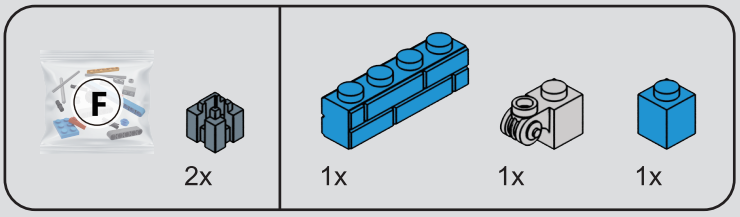

74

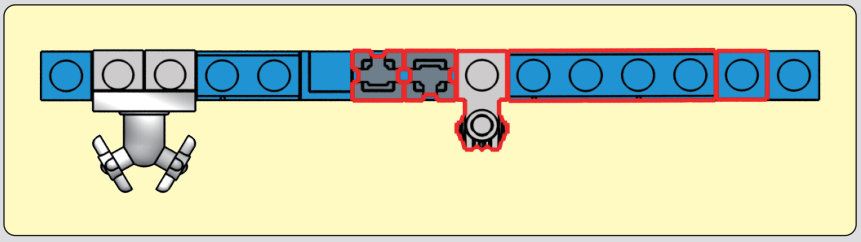

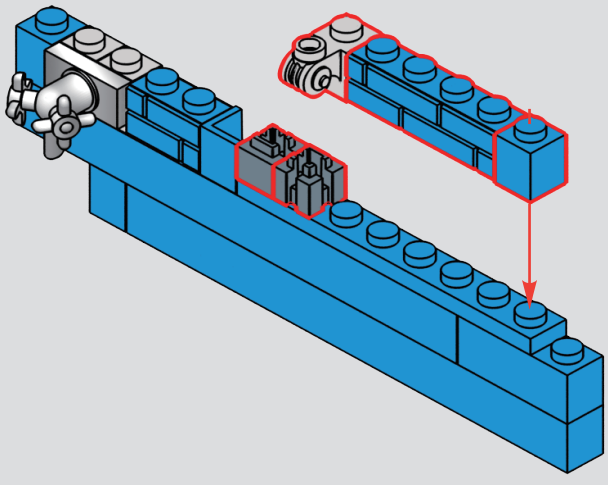

75

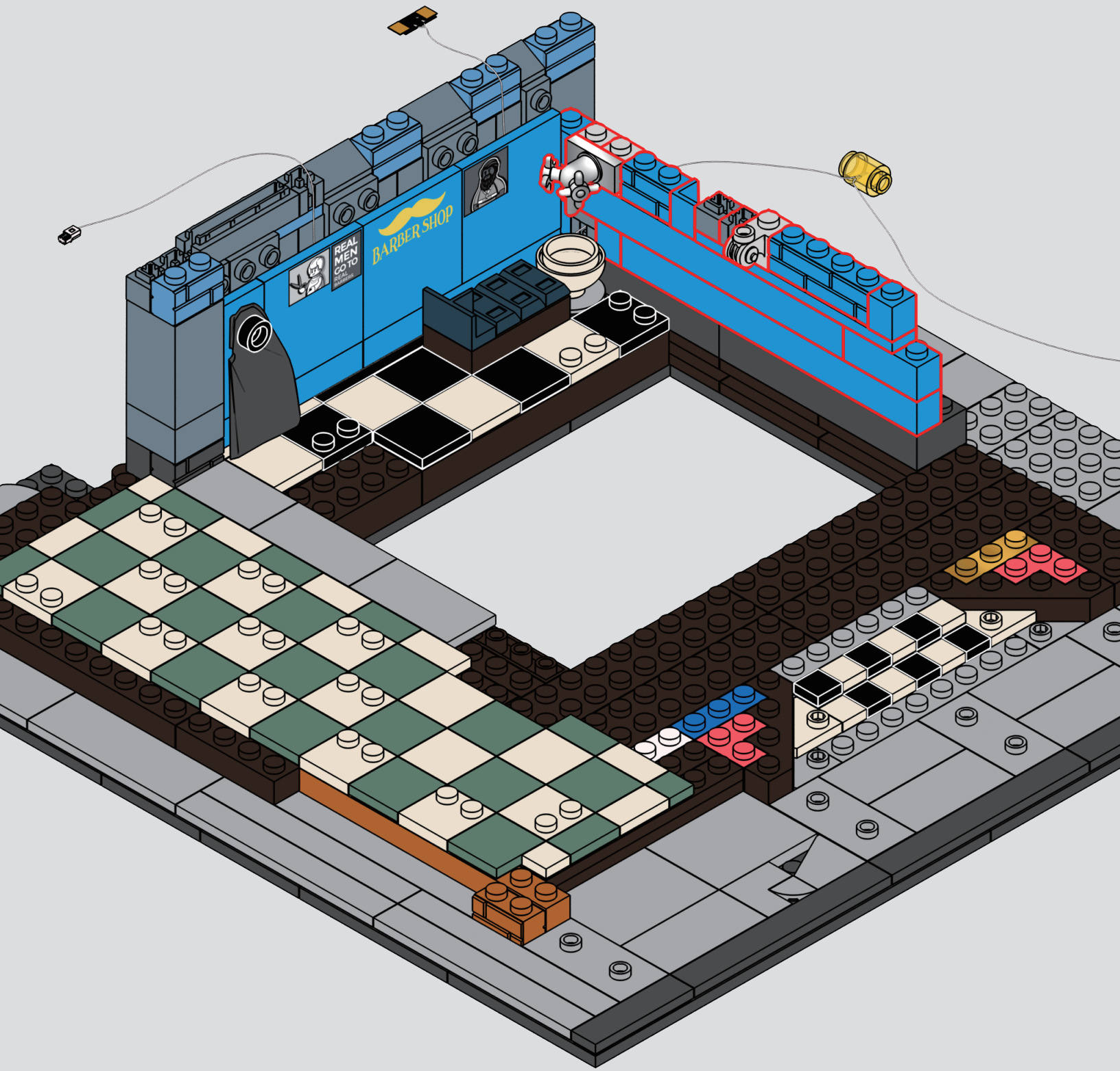

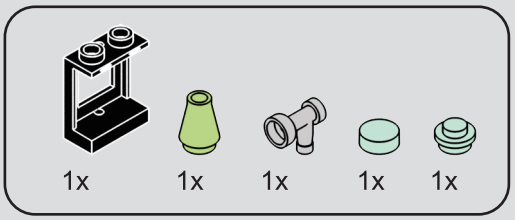

76

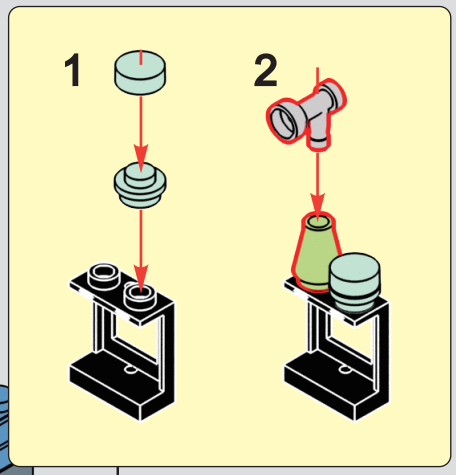

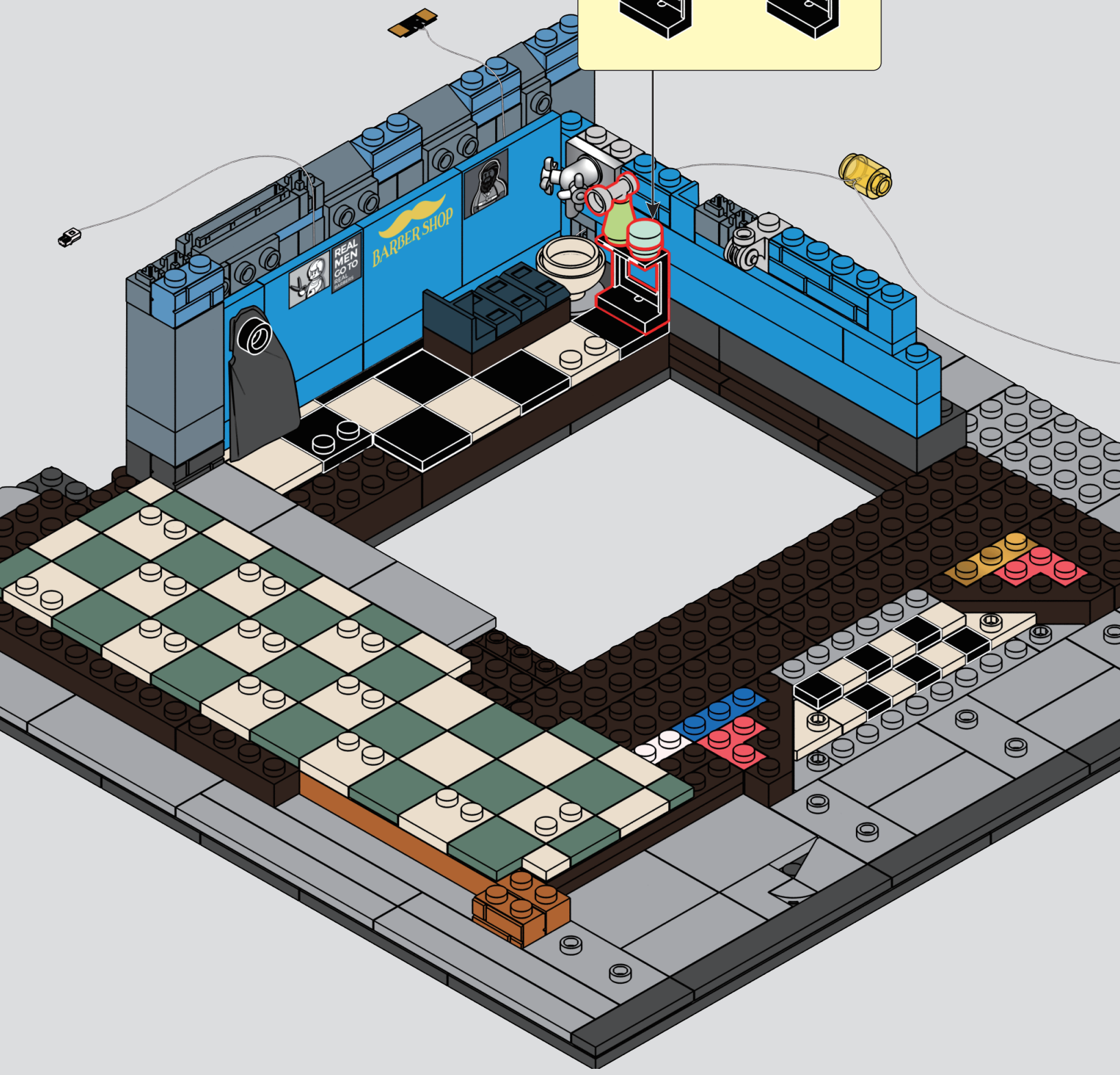

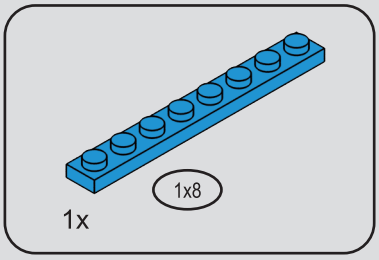
1x8
1x

77

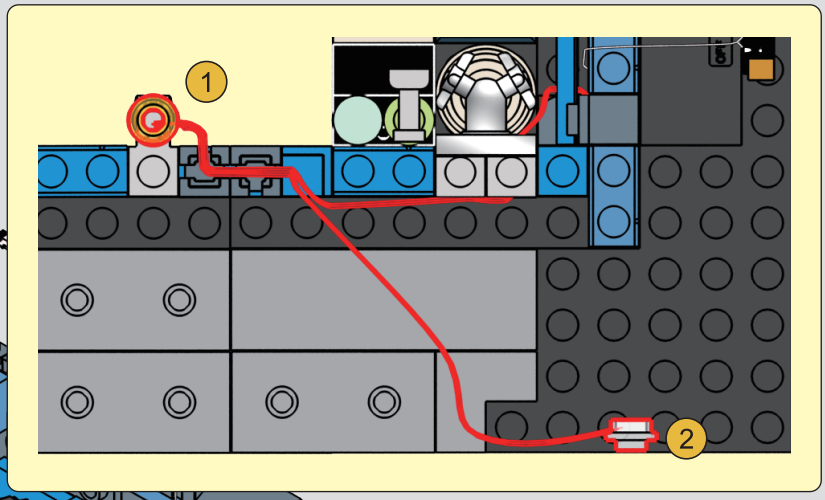
1
2

1

REAL MEN GO TO BARBER SHOP
1
2

2

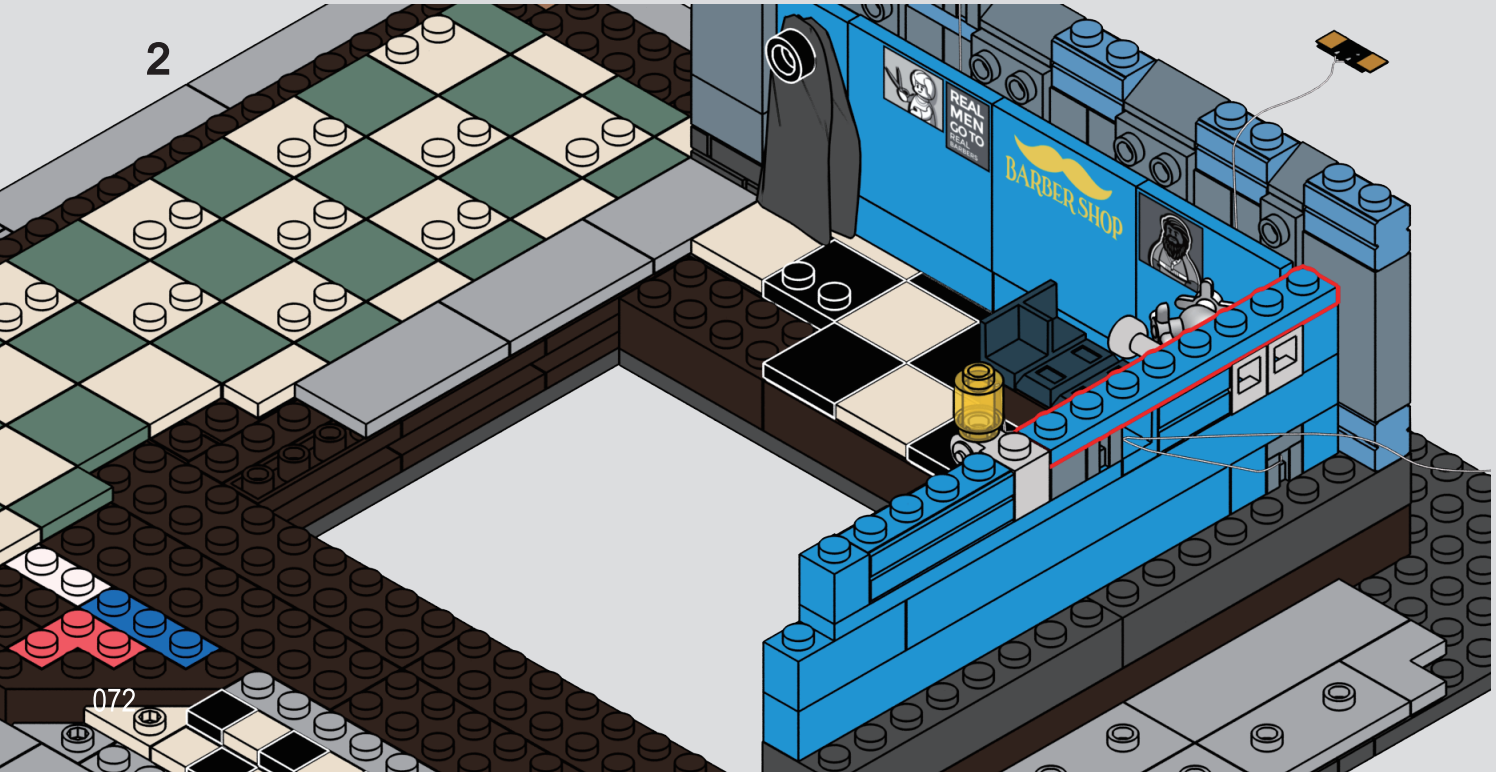
REAL MEN GO TO BARBER SHOP

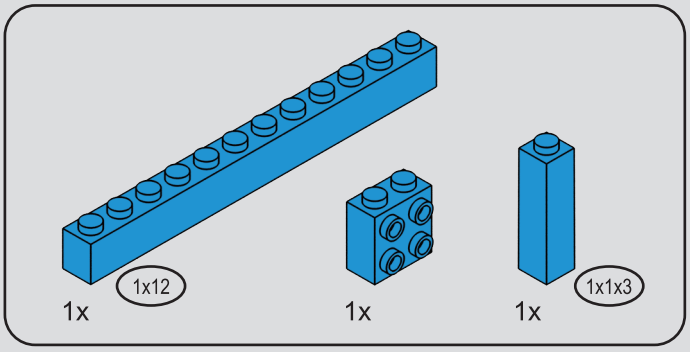

78

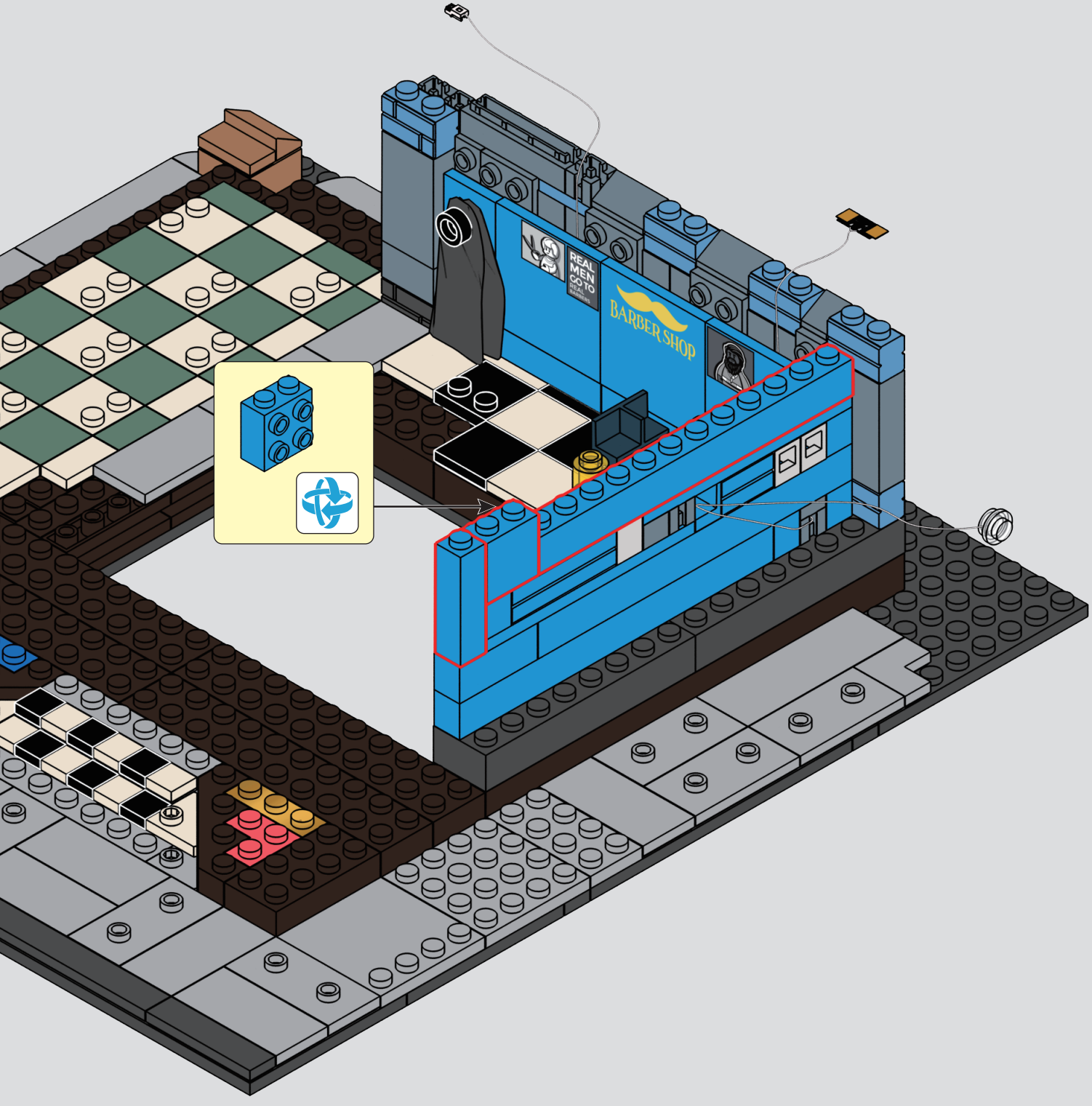

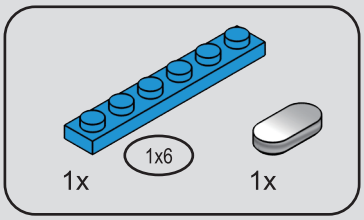

79

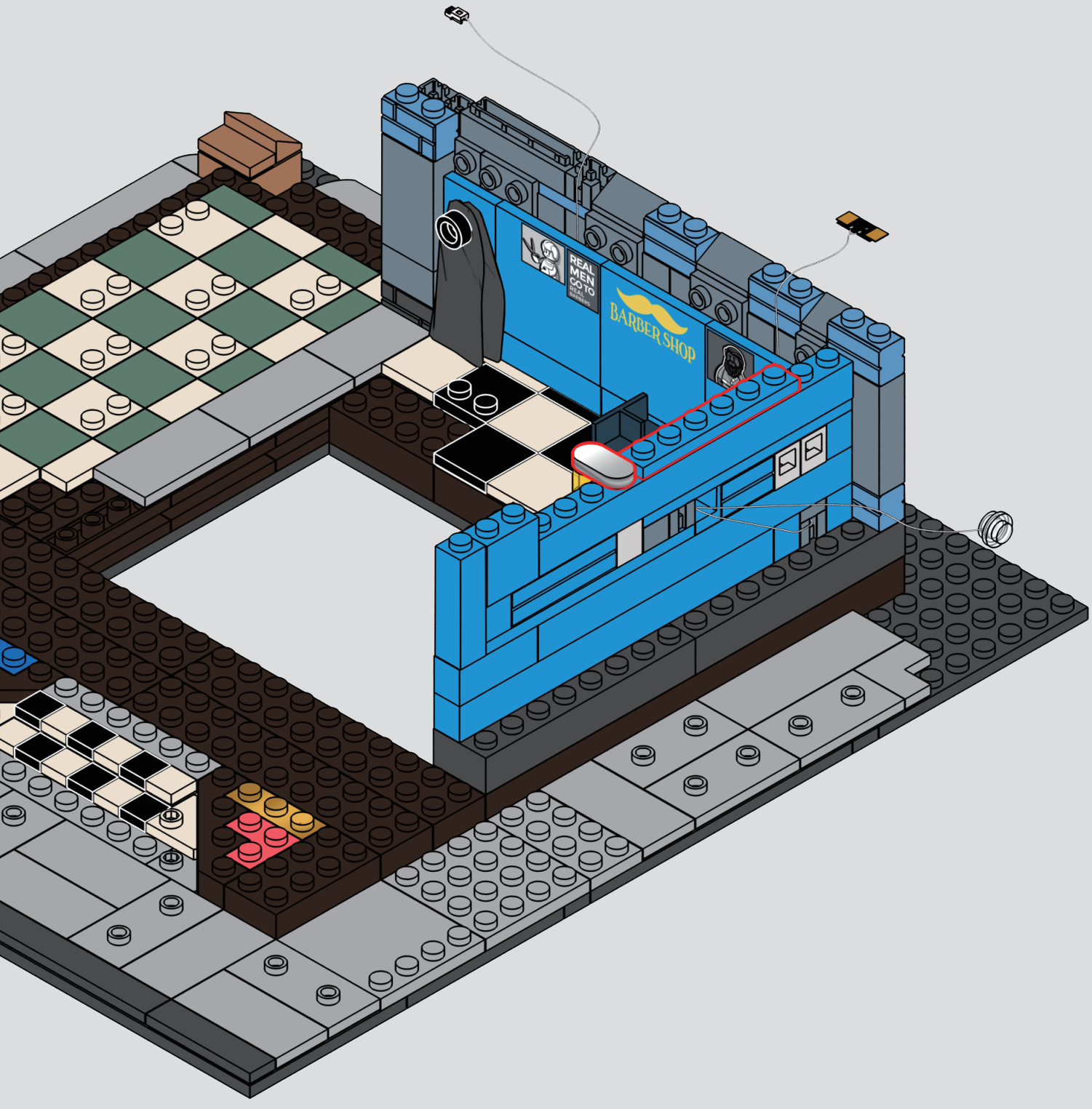

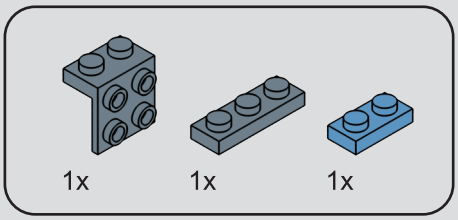

80



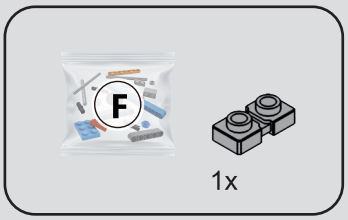

81

1

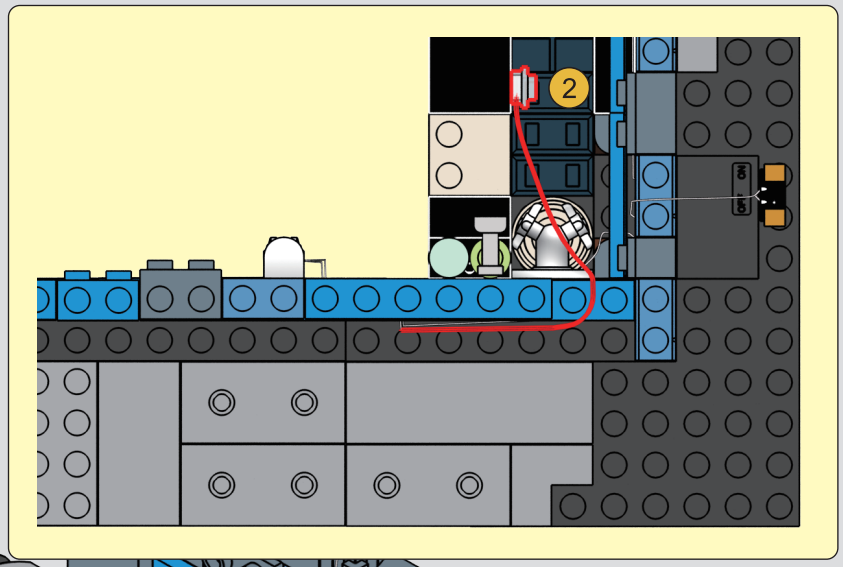

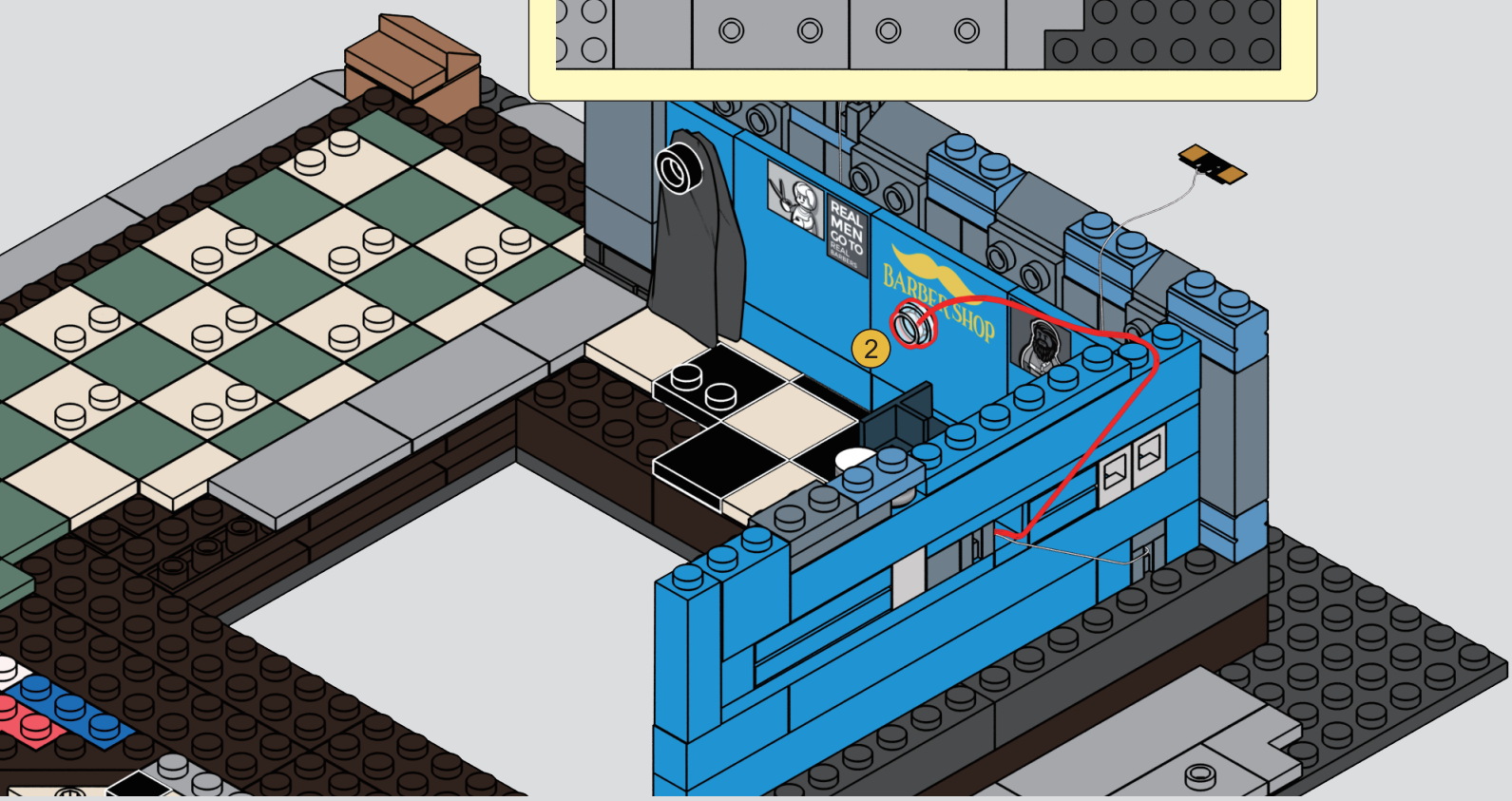

2

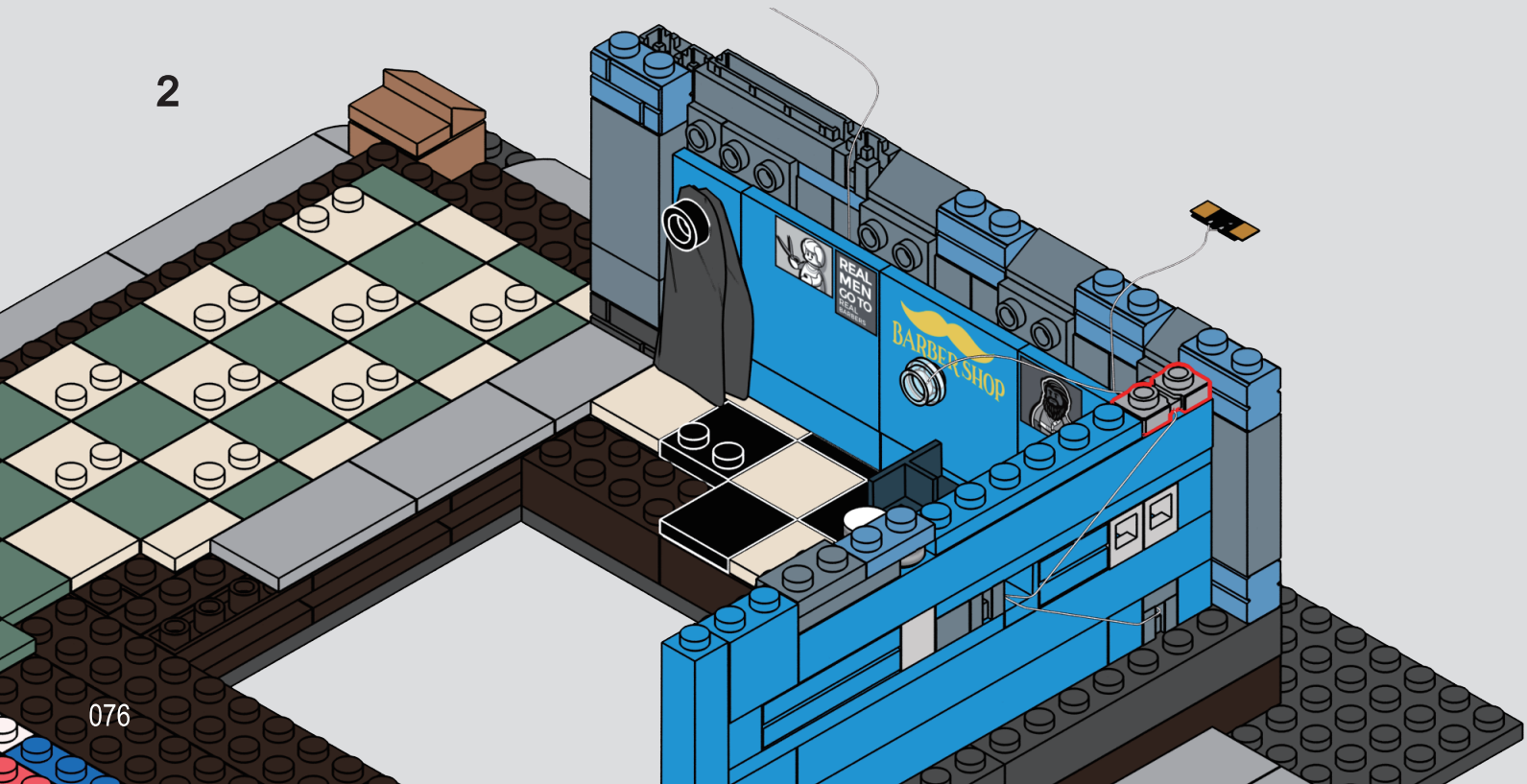

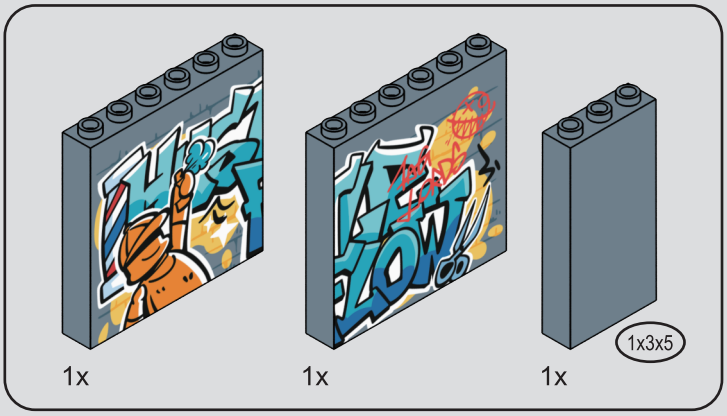

82

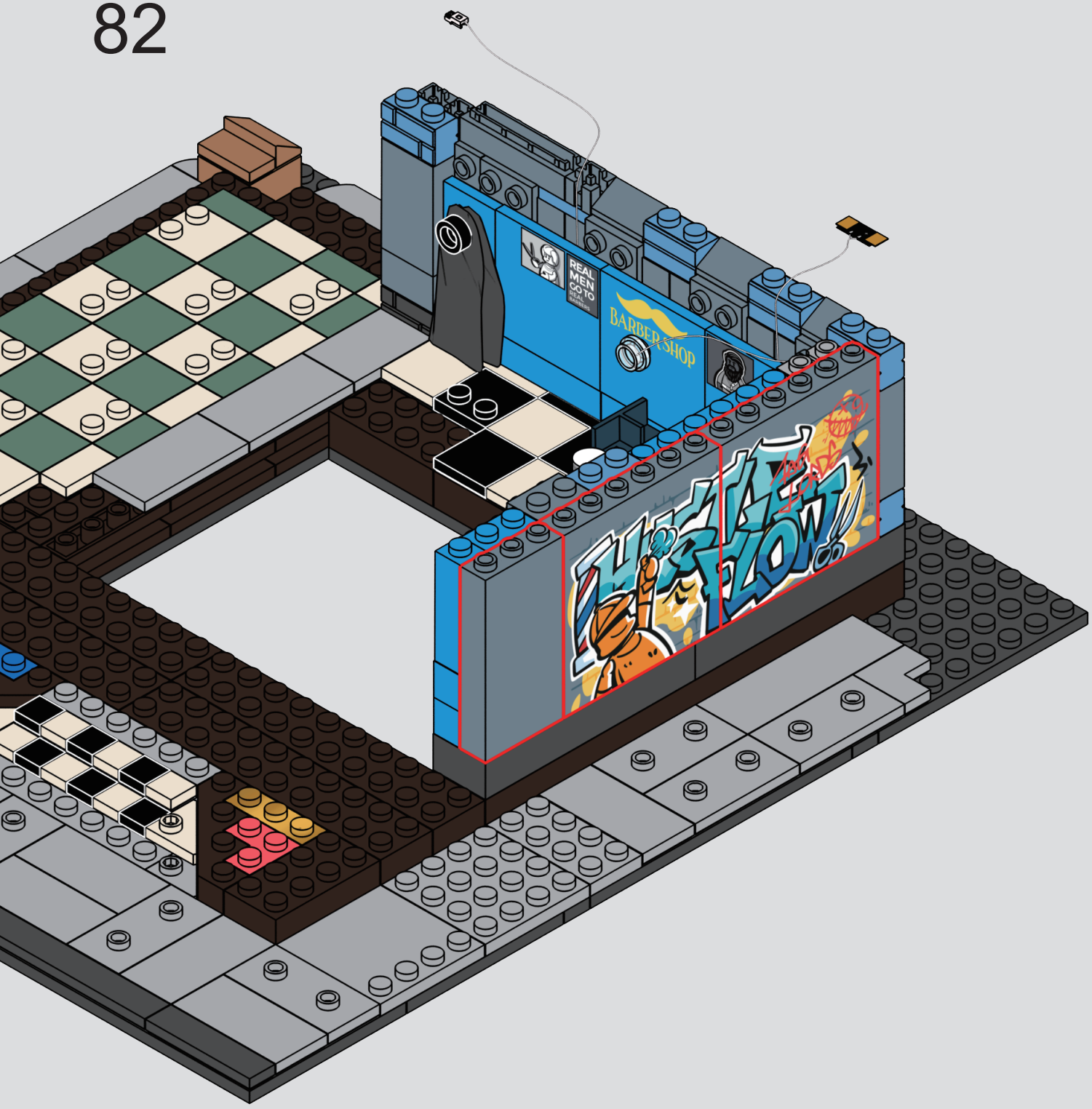

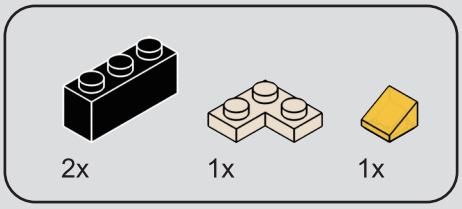

83

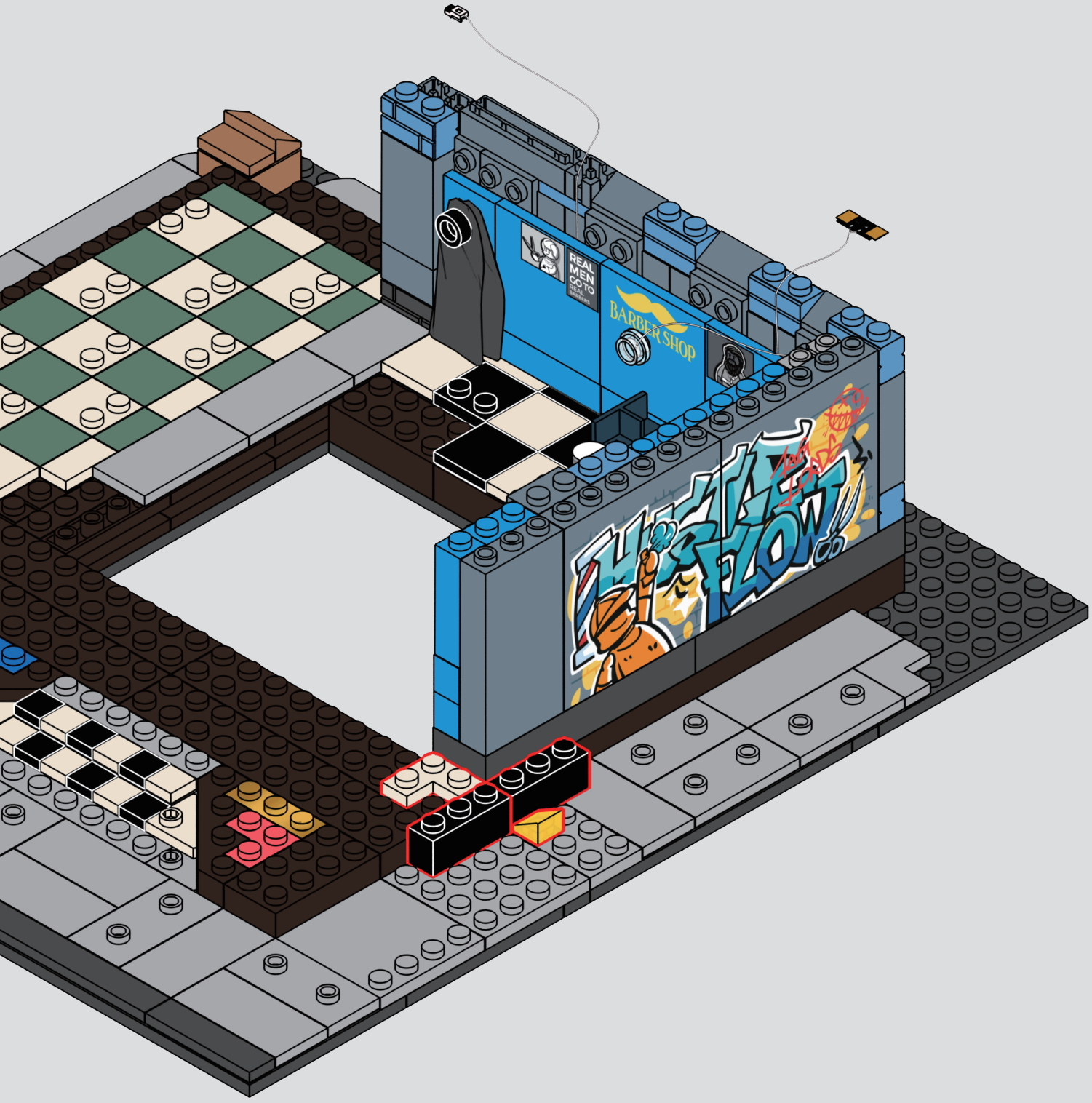

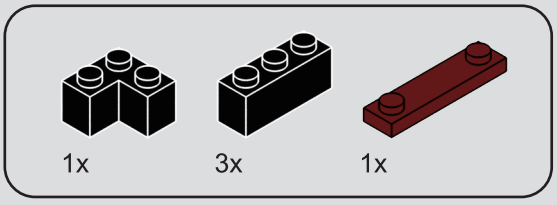

84



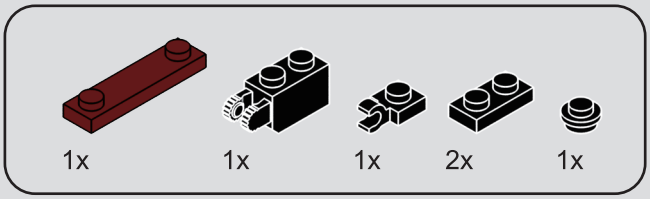

85



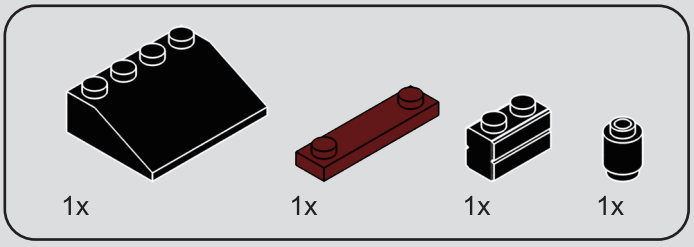

86



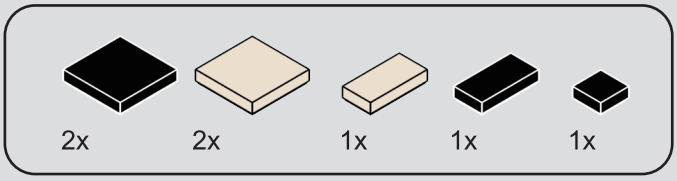

87

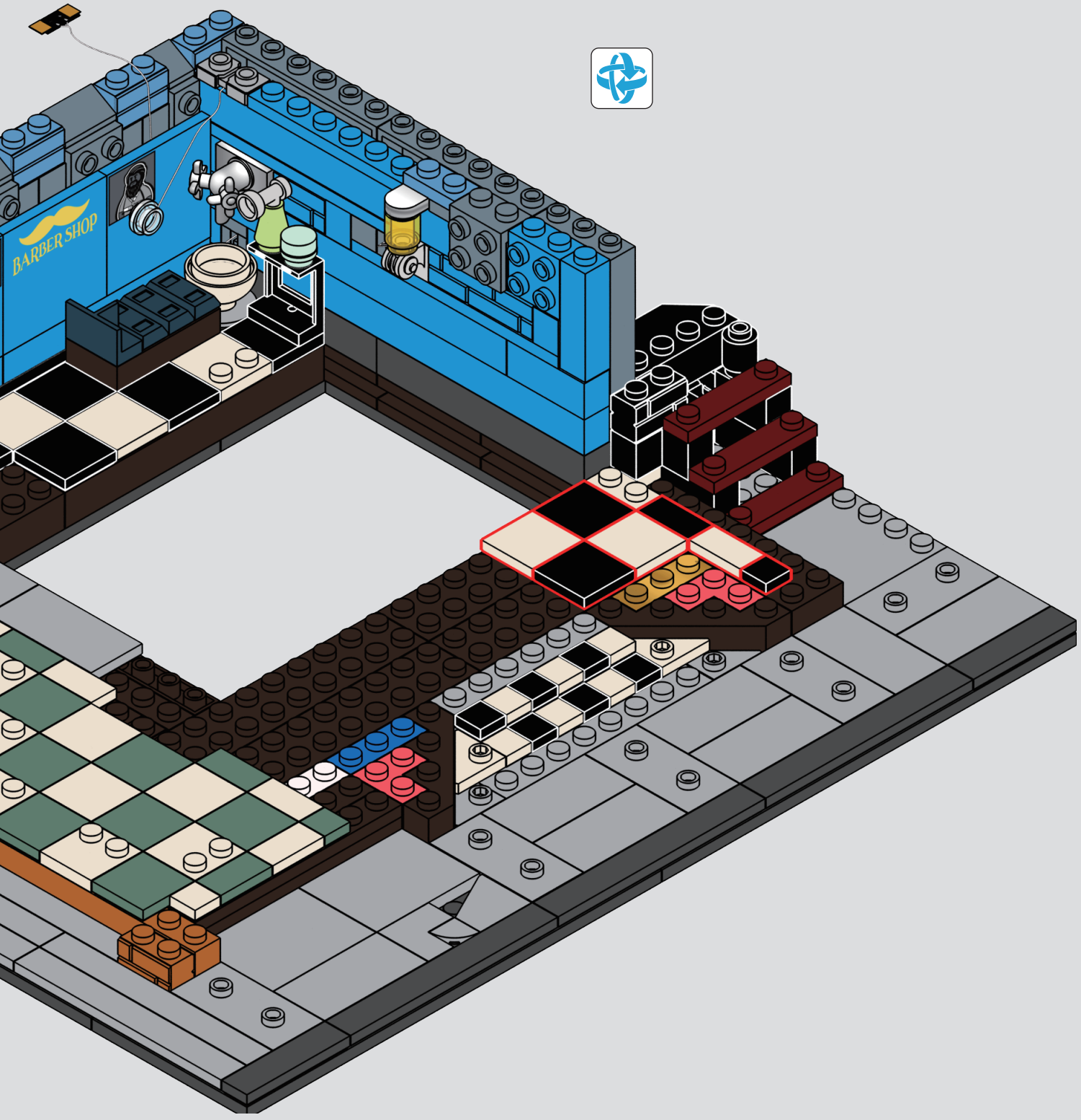

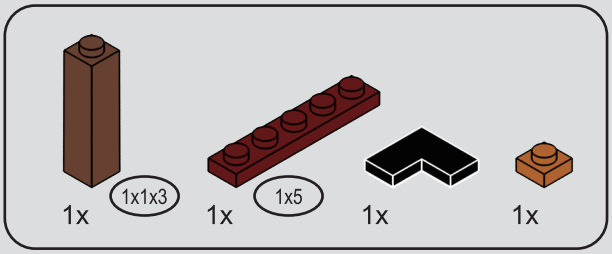

88

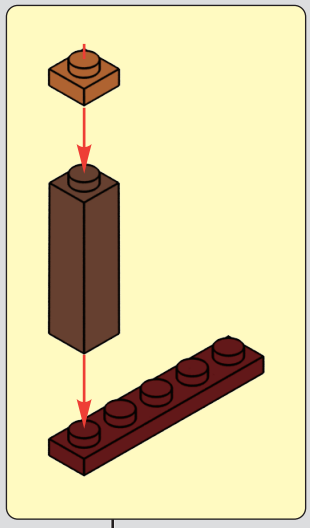



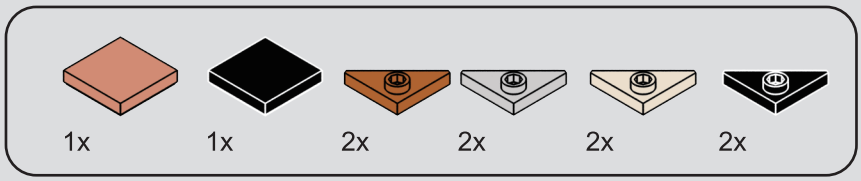

89



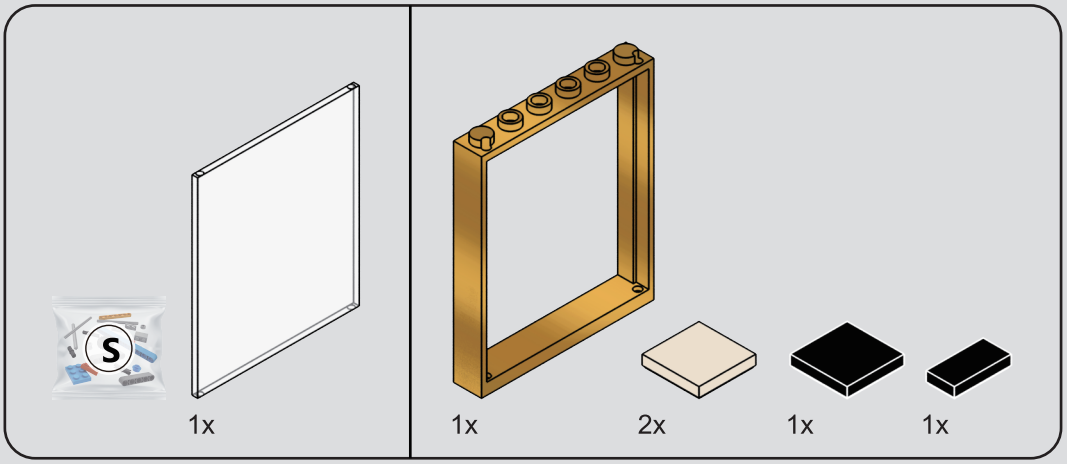

90



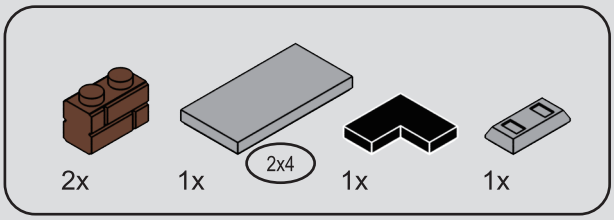

91



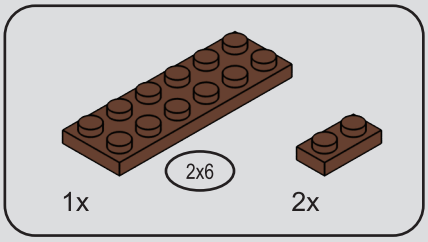

92

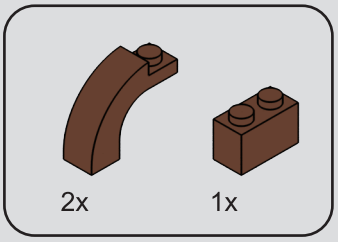

93

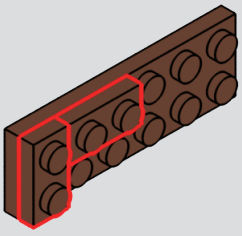

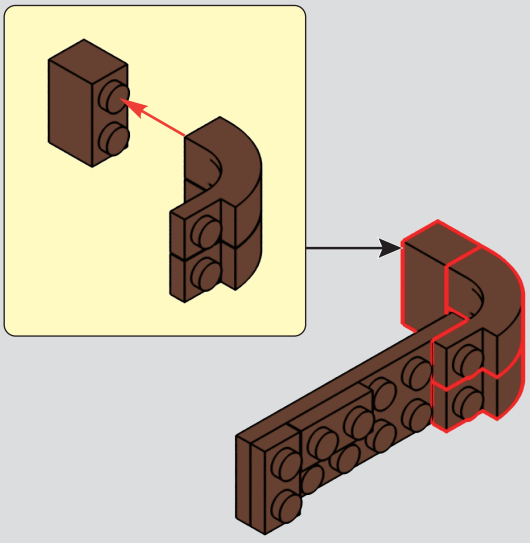

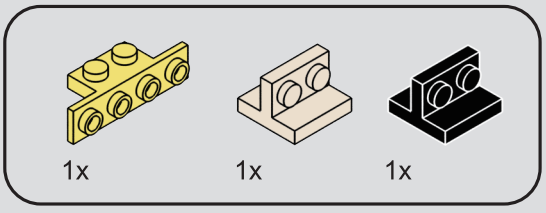

94

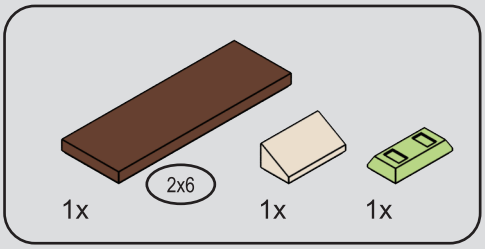

95

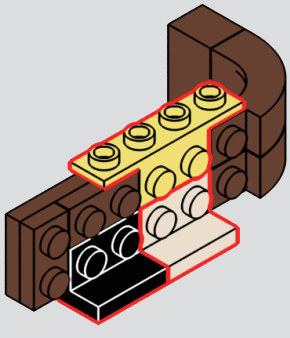

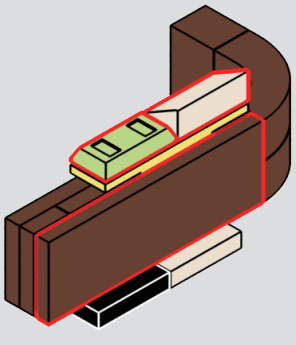

96



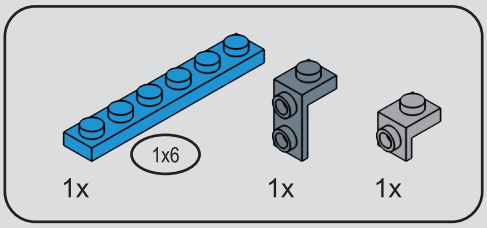

97


3
S
F
LUMIBRICKS
01


BARBER SHOP

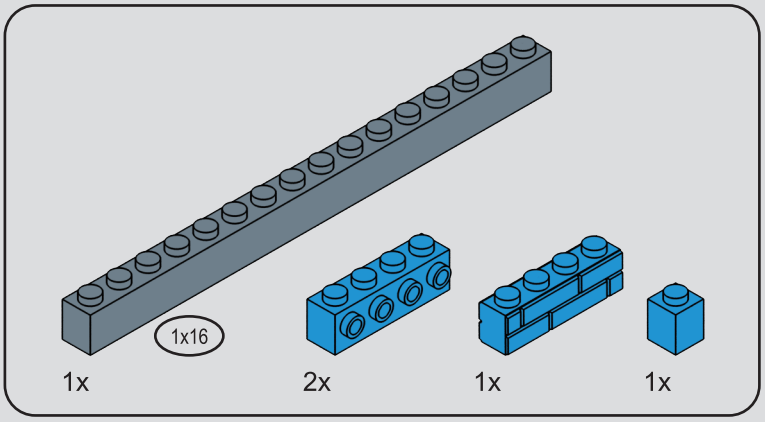

98

99



1x

100

1


BARBER SHOP
REAL MEN GO TO REAL BARBERS

2

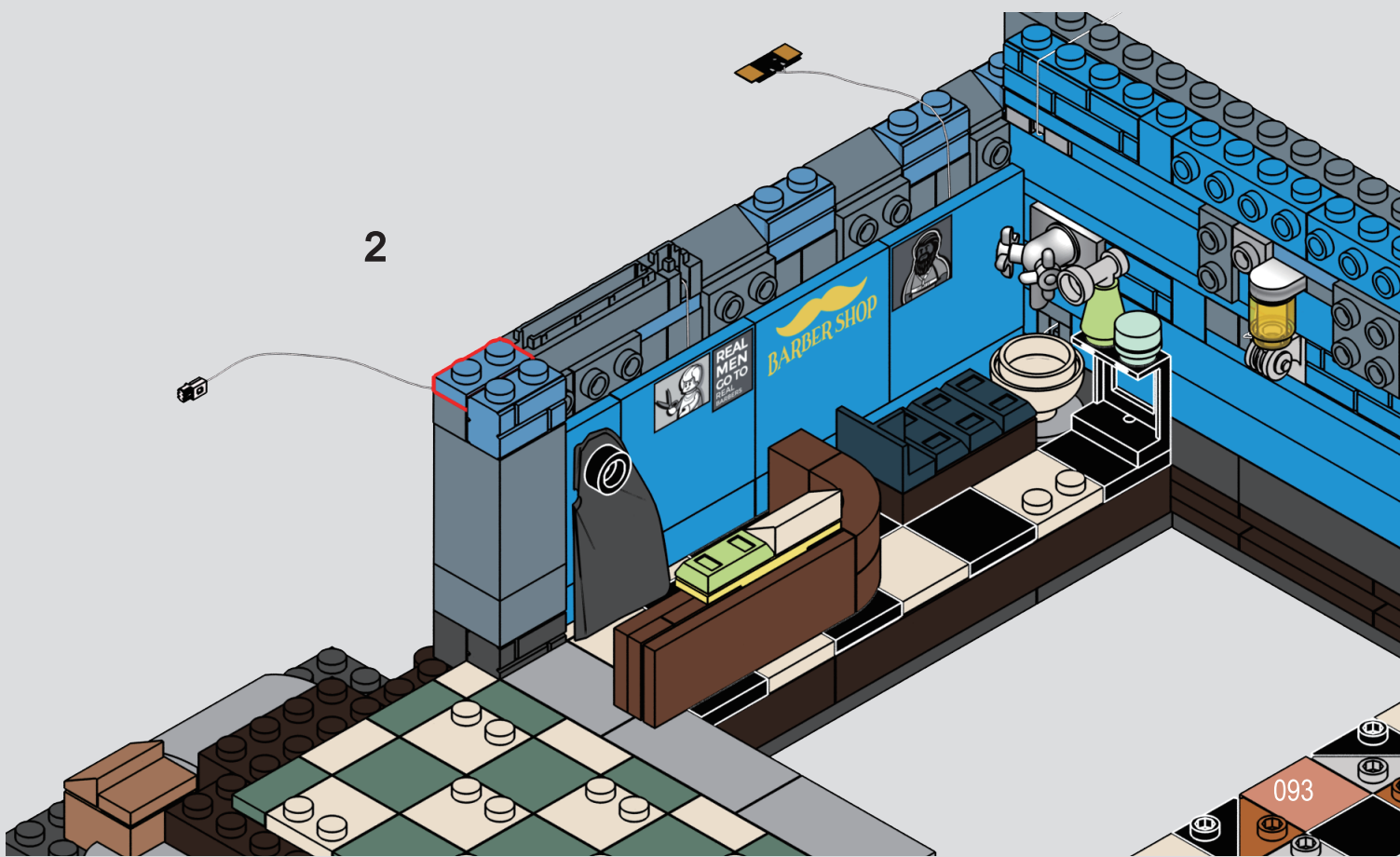
BARBER SHOP
REAL MEN GO TO REAL BARBERS

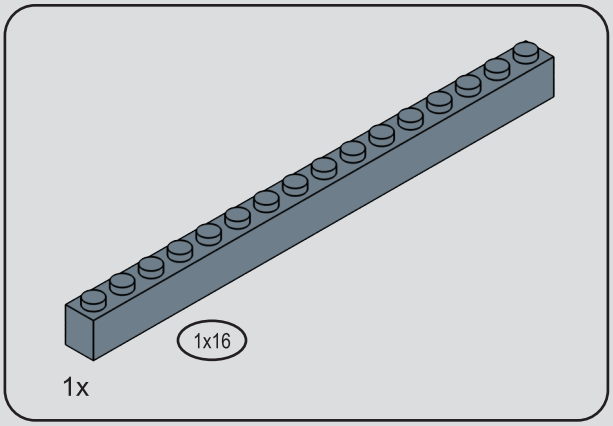
1x16
1x

101

1

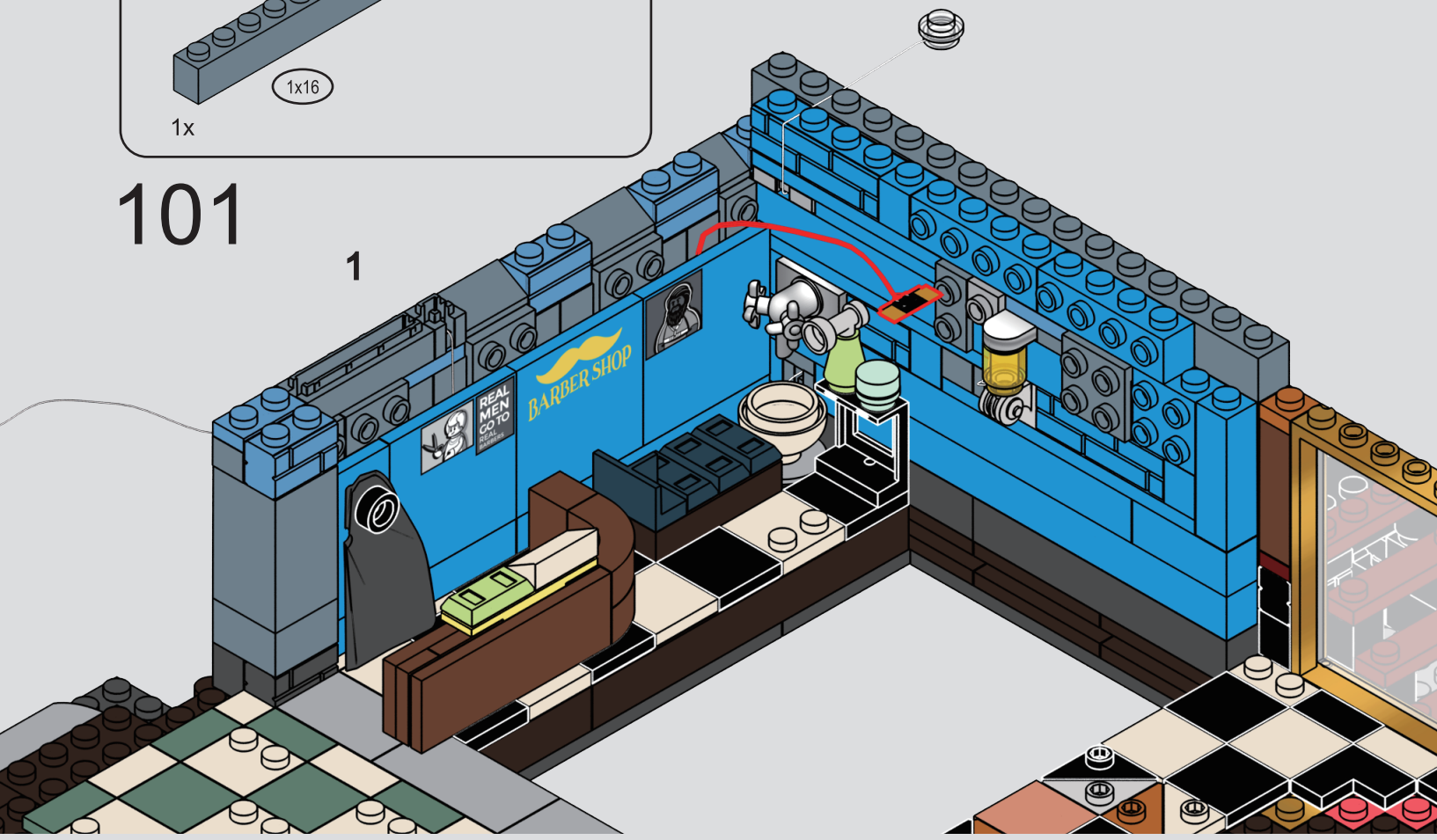
BARBER SHOP
REAL MEN GO TO REAL BARBERS

2


BARBER SHOP
REAL MEN GO TO REAL BARBERS

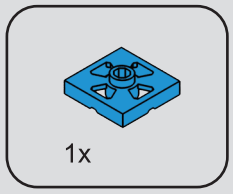

102

1

2

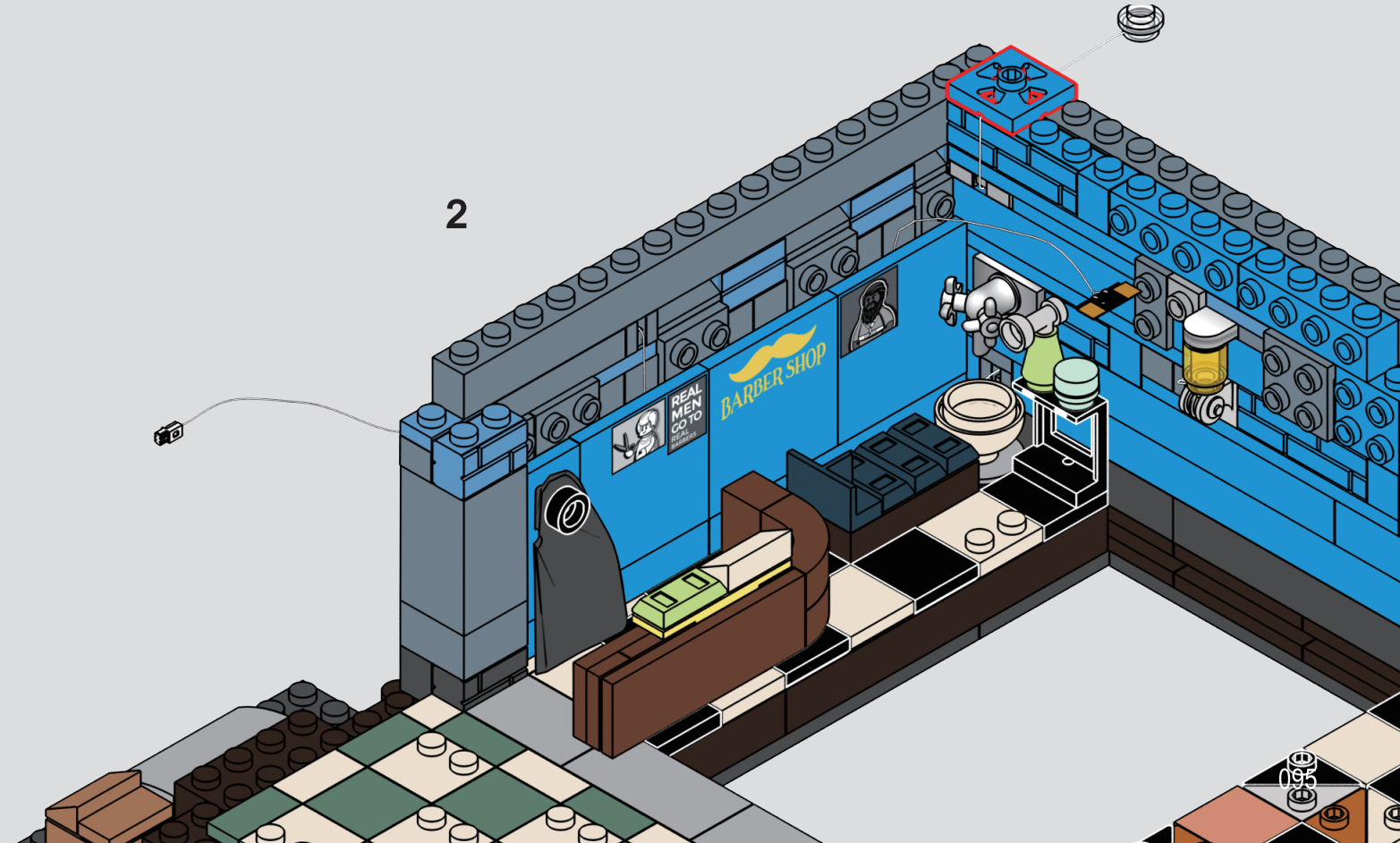

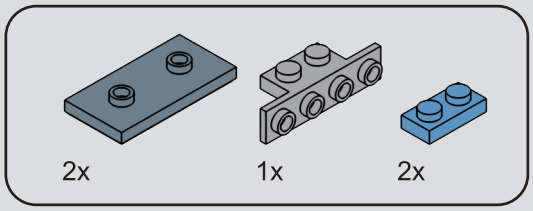

103



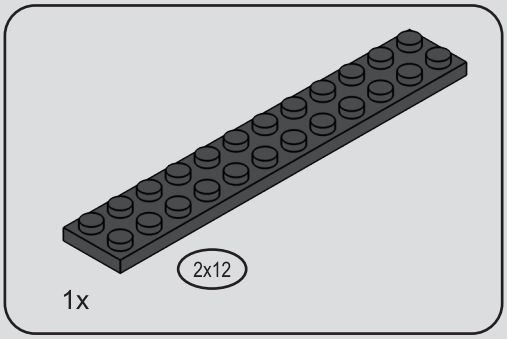

104



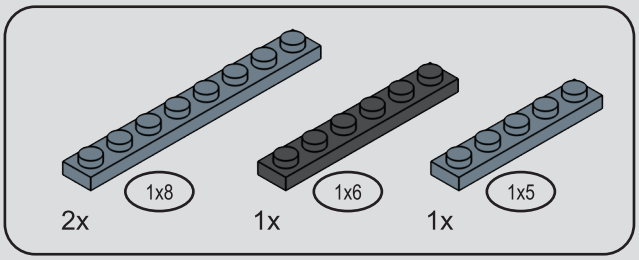

105

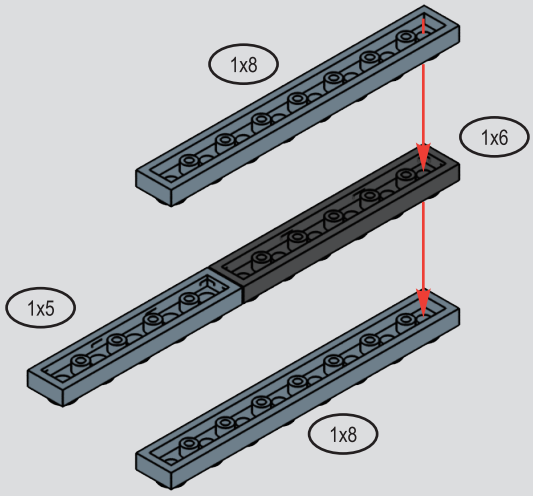

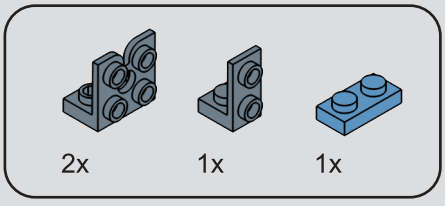

106

1

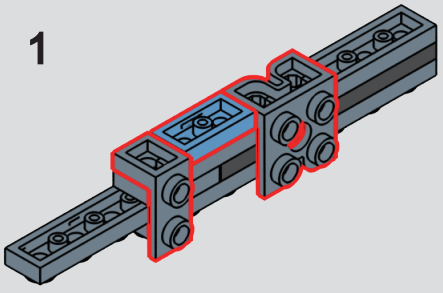

2

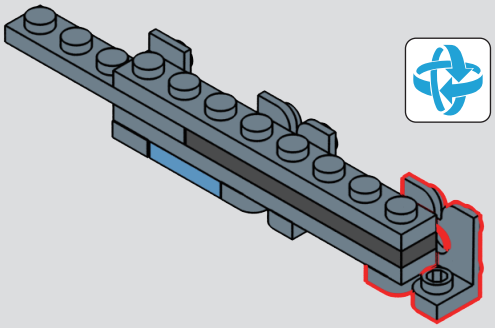

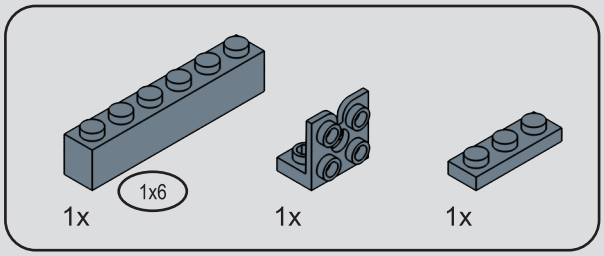

107

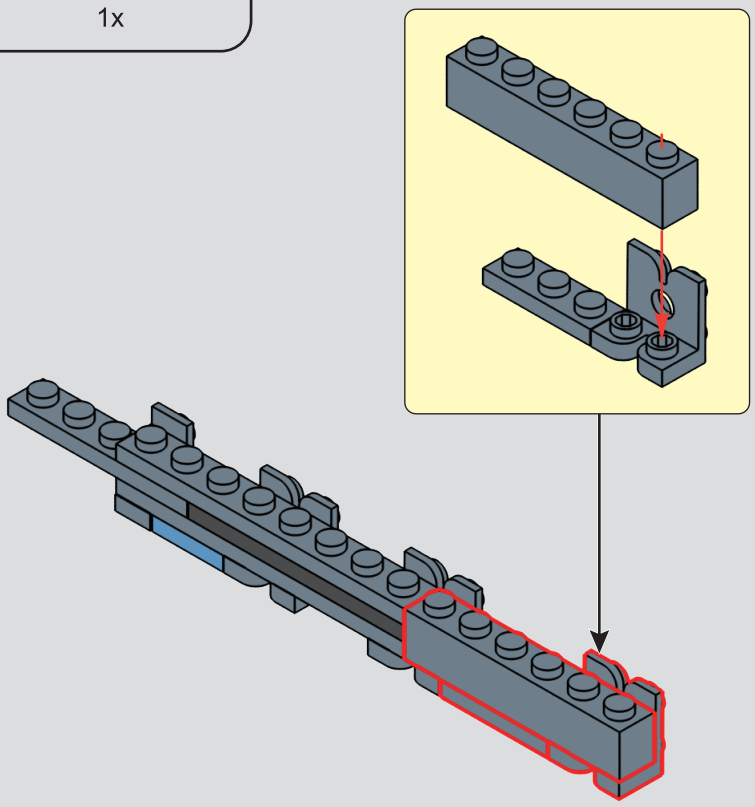

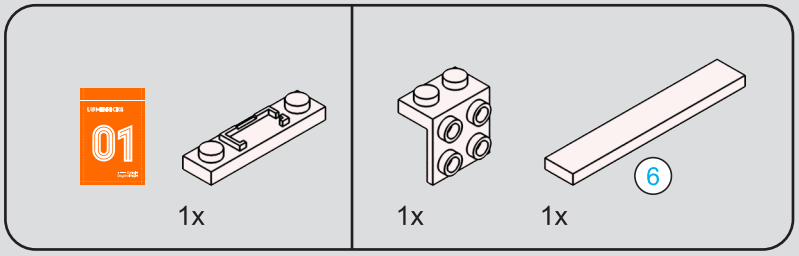



108

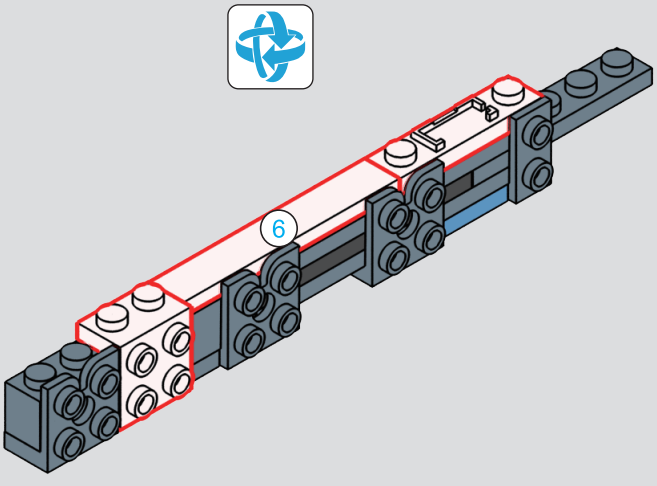

109



110

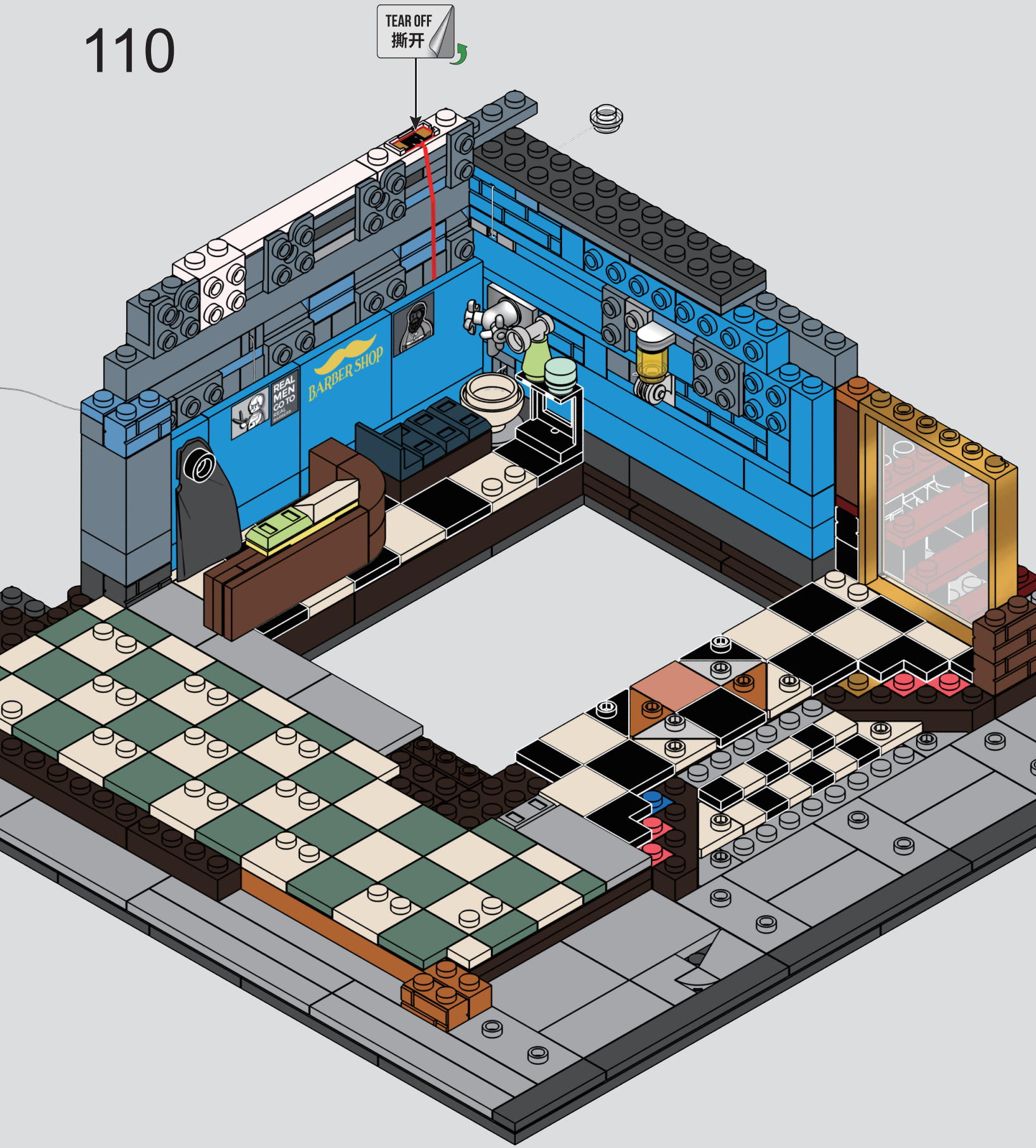

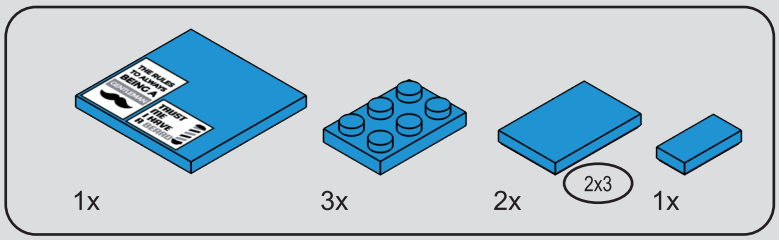

111

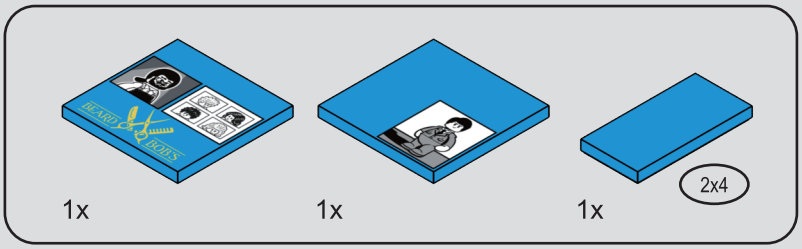

112

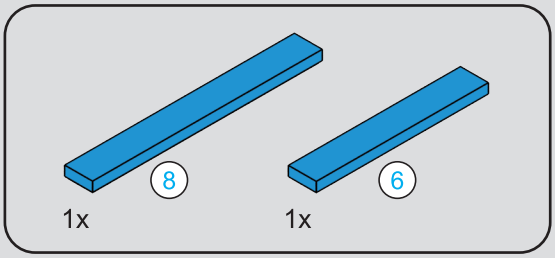
8
6
1x
1x


6
1:1
8
1:1

113


8
6
BEARD & BOB'S
BARBER SHOP
REAL MEN GO TO BEARD BARBER
THE RULES TO ALWAYS BEING A GENTLEMAN
TRUST ME I HAVE A BEARD

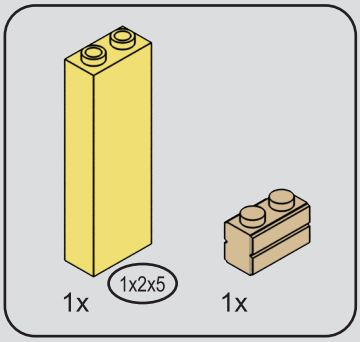
1x
1x2x5
1x

114

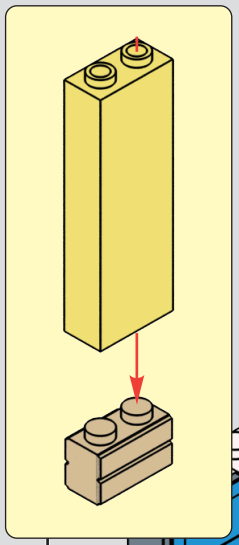

THE RULES TO ALWAYS BEING A GENTLEMAN
TRUST ME I HAVE A BEARD
REAL MEN GO TO BARBER SHOP
BEARD BOB'S
BARBER SHOP

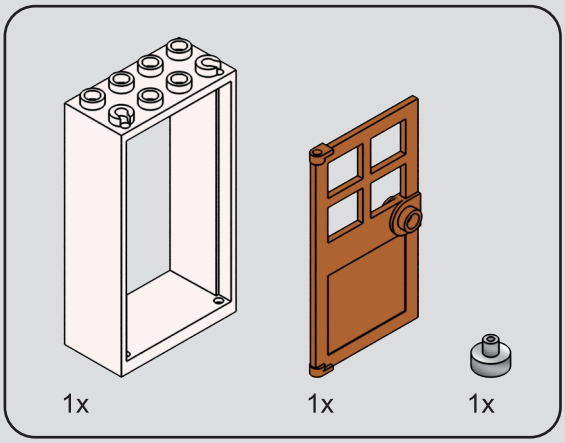
1x
1x
1x

115


REAL MEN GO TO
BEARD BOB'S
BARBER SHOP
THE RULES TO ALWAYS BEING A
TRUST ME I HAVE A

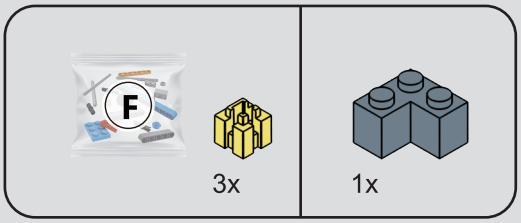
F
3x
1x

116


THE RULES TO ALWAYS BEING A GENTLEMAN
TRUST ME I HAVE A BEARD
BEARD BOB'S
BARBER SHOP
REAL MEN GO TO REAL BARBERS

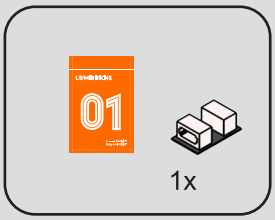
01
1x

117

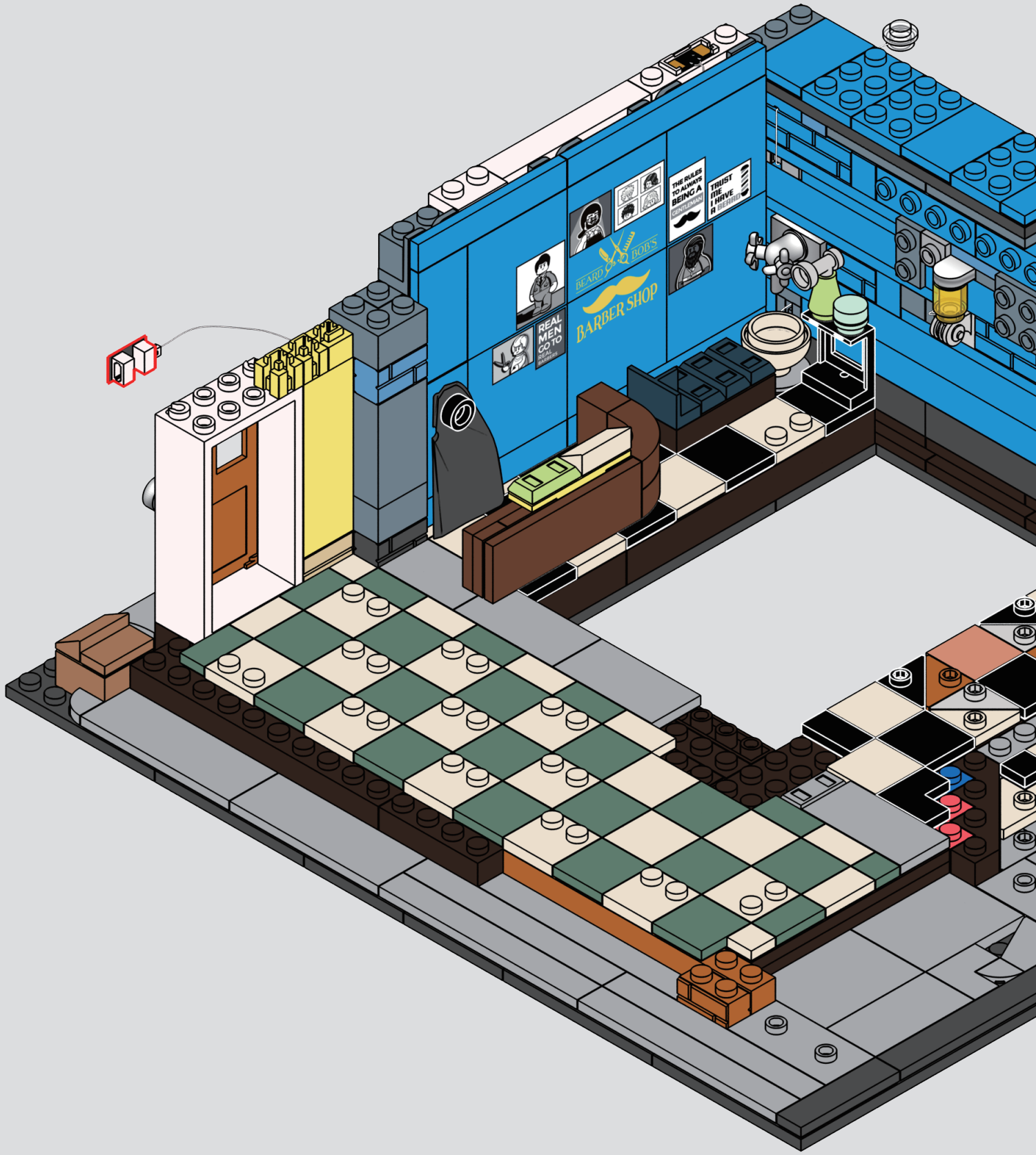
THE RULES TO ALWAYS BEING A GENTLEMAN
TRUST ME I HAVE A BEARD
BEARD BOB'S
BARBER SHOP
REAL MEN GO TO REAL BARBERS

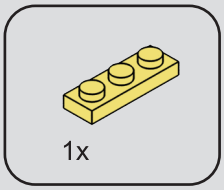
1x

118

1

THE RULES TO ALWAYS BEING A GENTLEMAN
TRUST ME I HAVE A BEARD
BEARD & BOB'S
BARBER SHOP
REAL MEN GO TO REAL BARBERS

2

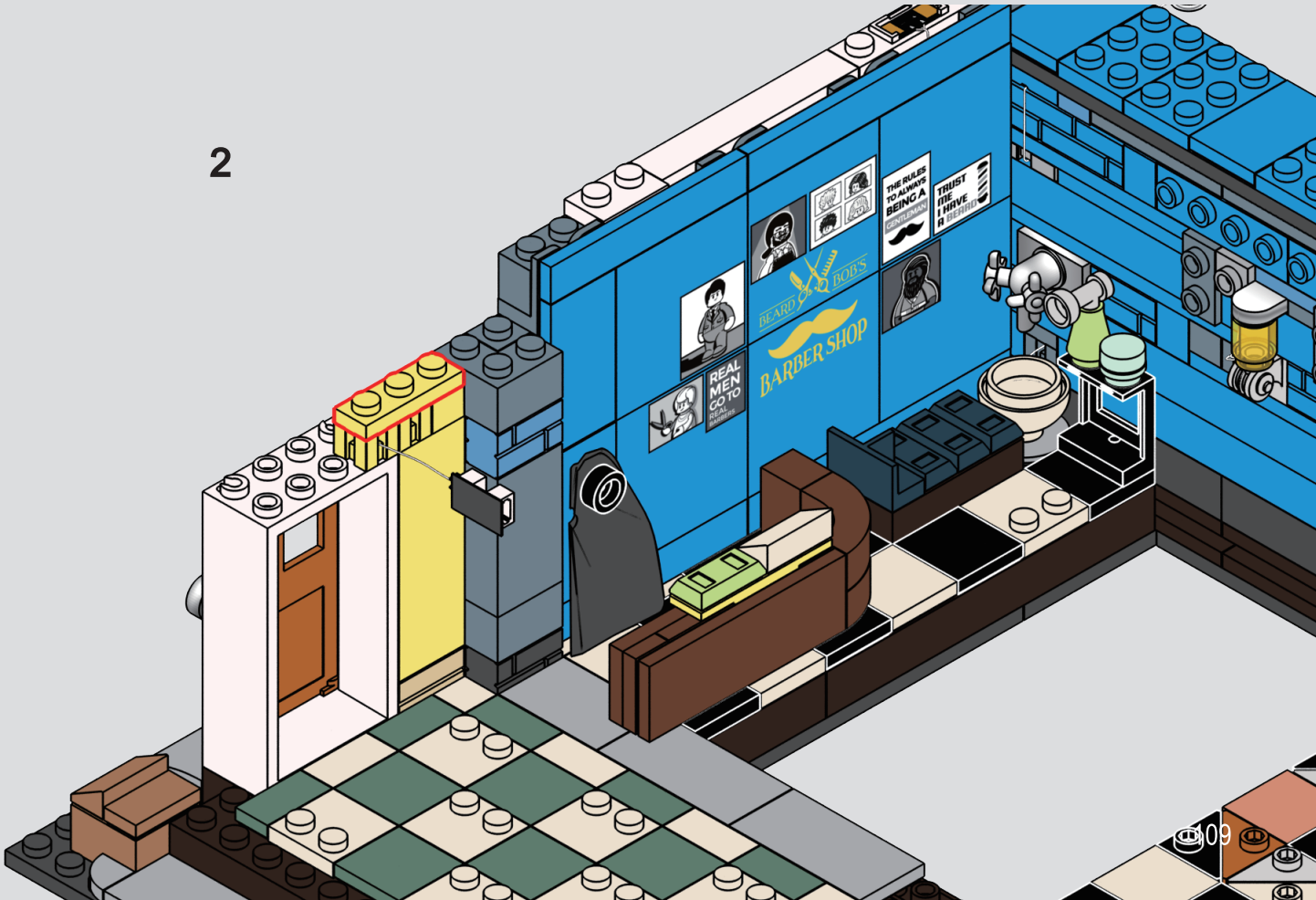
THE RULES TO ALWAYS BEING A GENTLEMAN
TRUST ME I HAVE A BEARD
BEARD & BOB'S
BARBER SHOP
REAL MEN GO TO REAL BARBERS

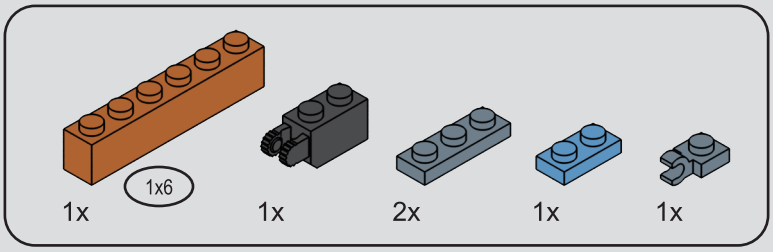

119

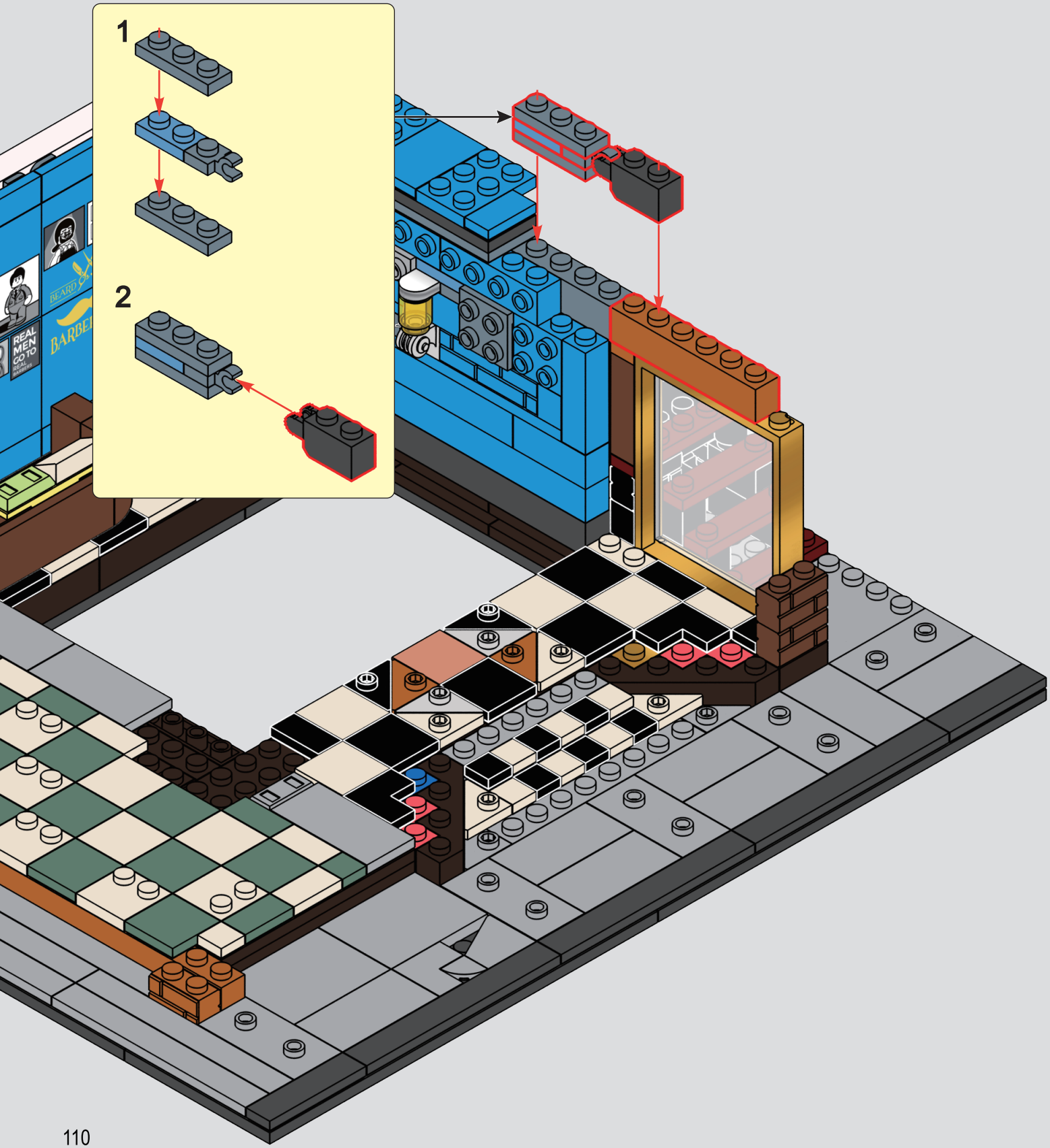

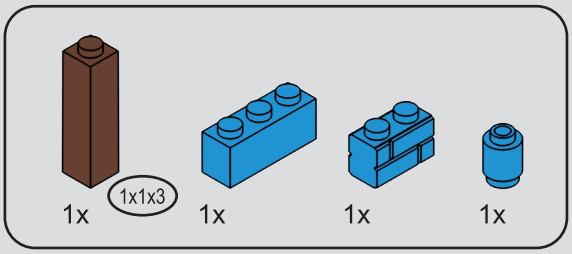
1x
1x1x3
1x
1x
1x

120

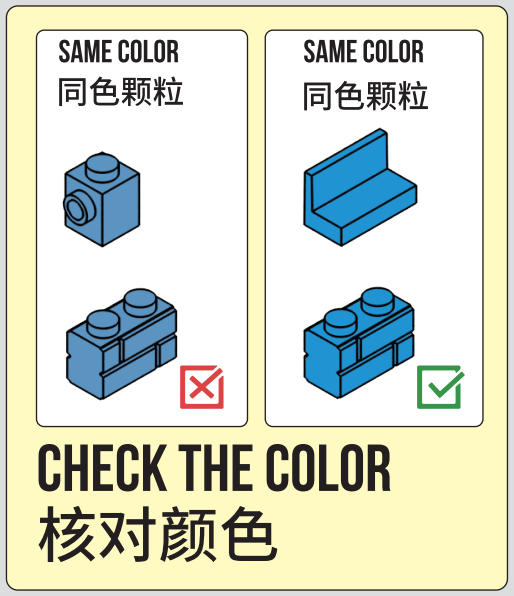
SAME COLOR
同色颗粒
SAME COLOR
同色颗粒
CHECK THE COLOR
核对颜色

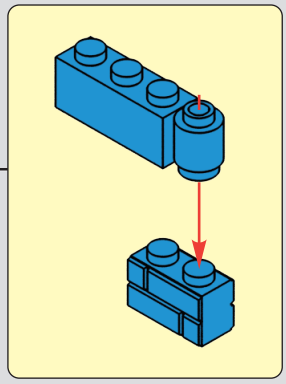

BEARD & BOB'S
BARBER SHOP
REAL MEN GO TO REAL BARBERS
THE RULES TO ALWAYS BEING A GENTLEMAN
TRUST ME I HAVE A BEARD

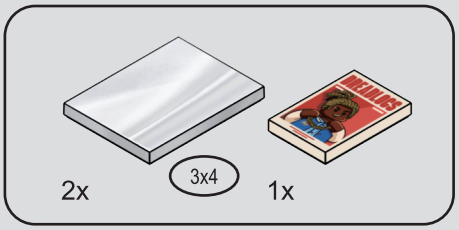
2x
3x4
1x

121

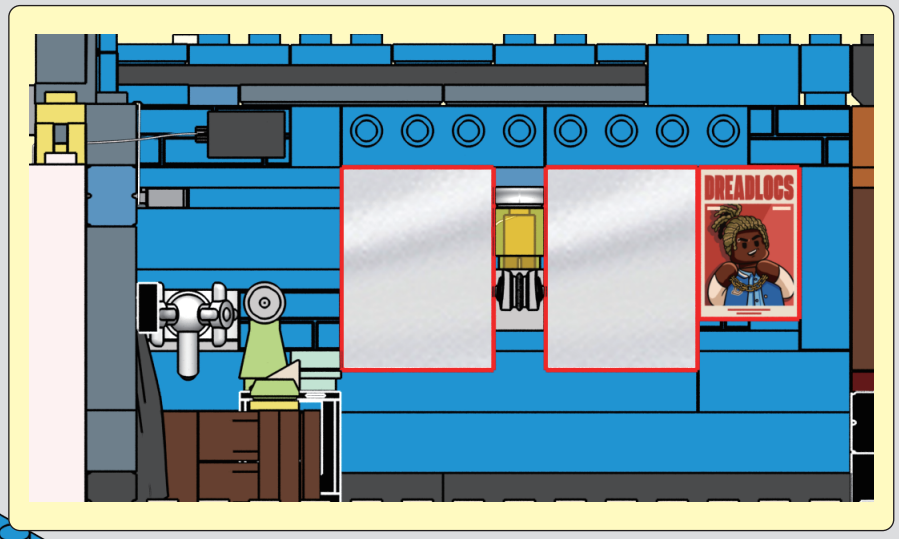
DREADLOCS


THE RULES TO ALWAYS BEING A GENTLEMAN
TRUST ME I HAVE A BEARD
BEARD & BOB'S
BARBER SHOP
REAL MEN GO TO REAL BARBERS
DREADLOCS

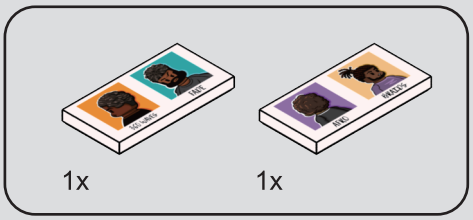
1x
1x

122

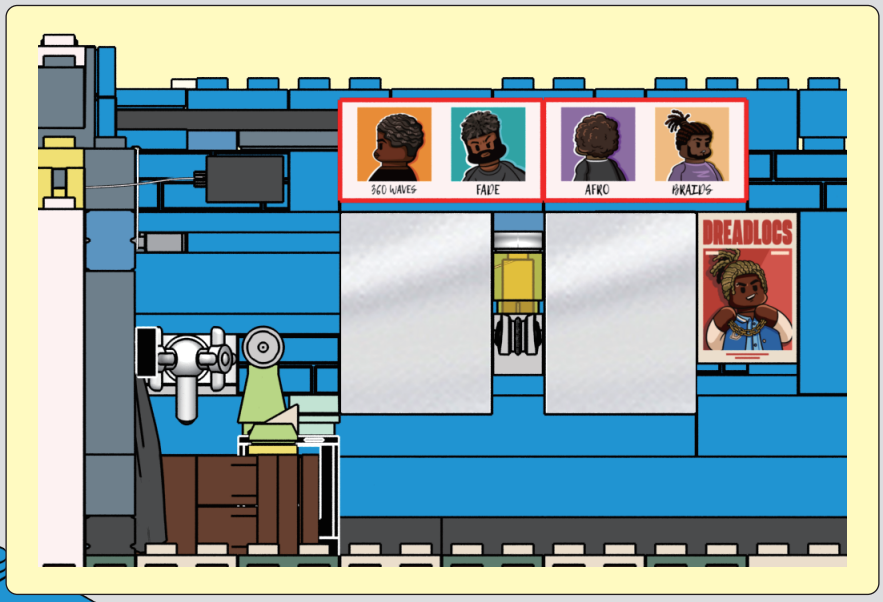
360 WAVES
FADE
AFRO
BRAID'S
DREADLOCS


THE RULES TO ALWAYS BEING A
TRUST ME I HAVE A
BEARD & BOB'S
BARBER SHOP
REAL MEN GO TO
360 WAVES
FADE
AFRO
BRAID'S
DREADLOCS

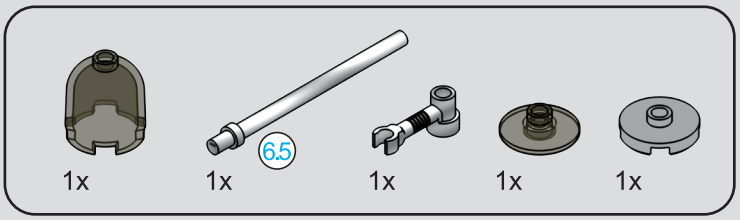
1x
6.5
1x
1x
1x
1x


6.5
1:1

123


6.5
1
2
3
BEARD & BOB'S
BARBER SHOP
REAL MEN GO TO REAL BARBERS
THE RULES TO ALWAYS BEING A GENTLEMAN
TRUST ME I HAVE A BEARD

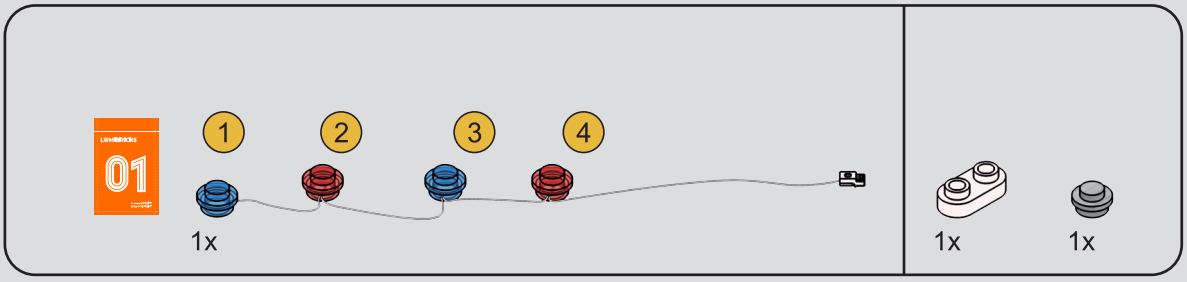

124

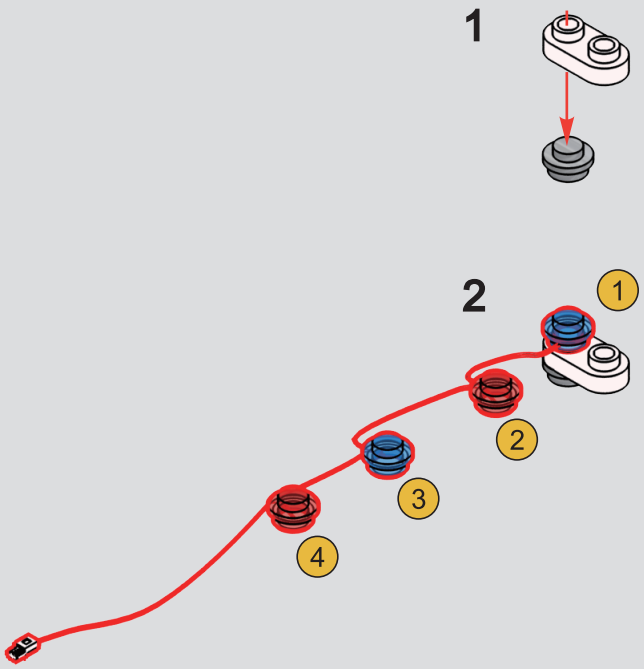

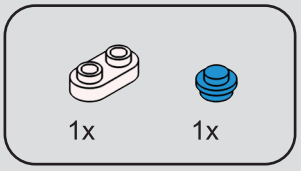

125

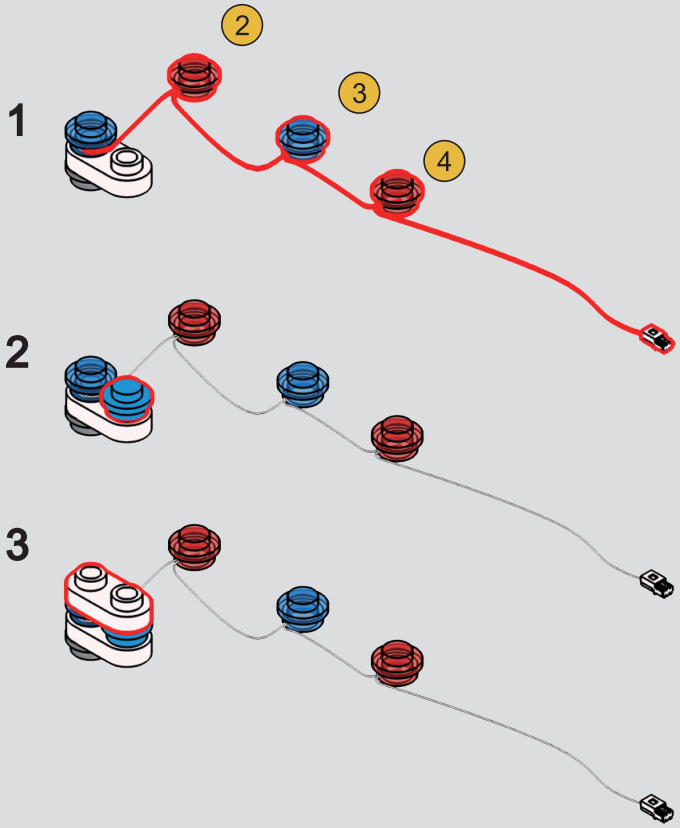

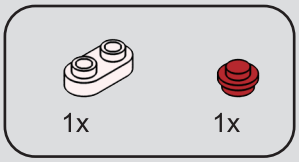

126

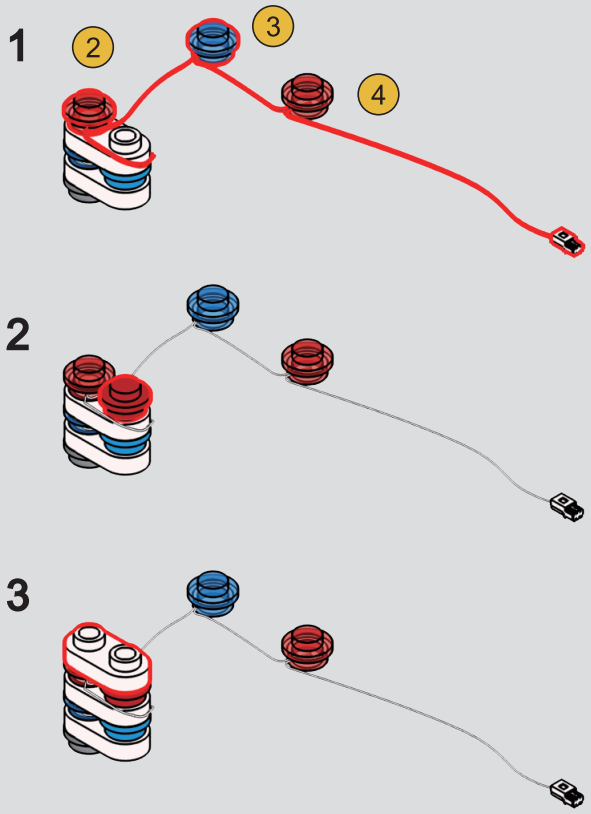

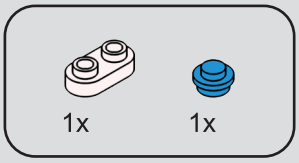

127

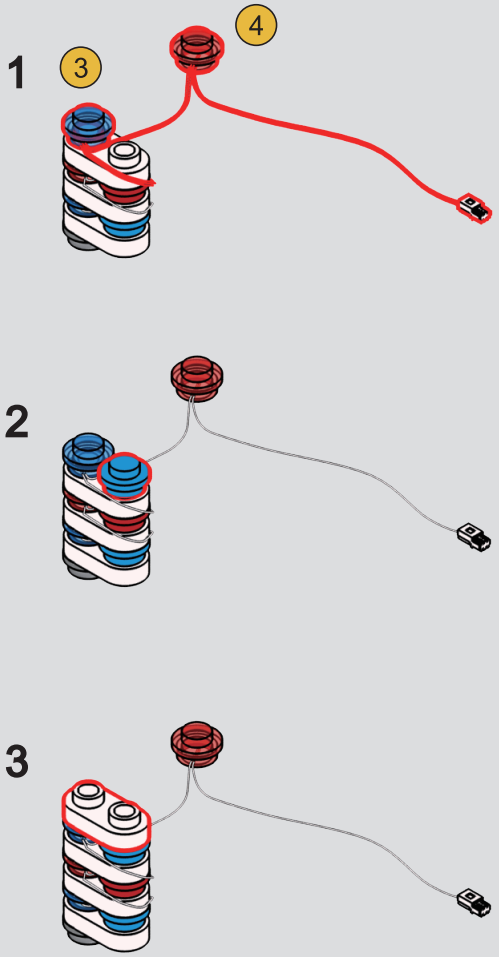

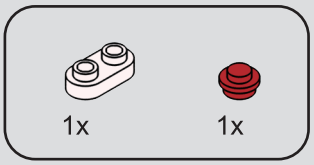

128

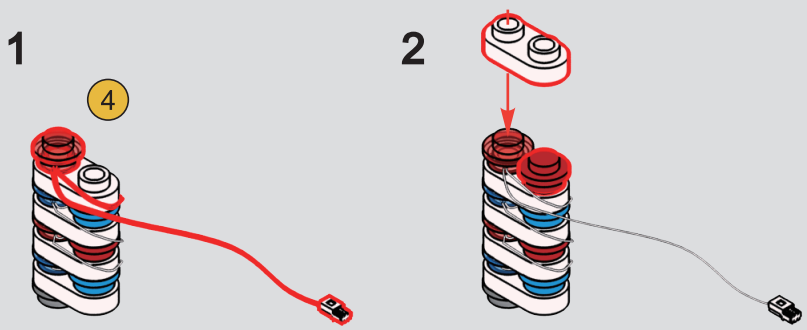

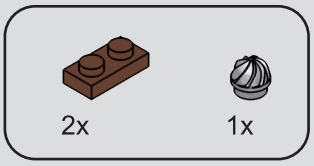

129

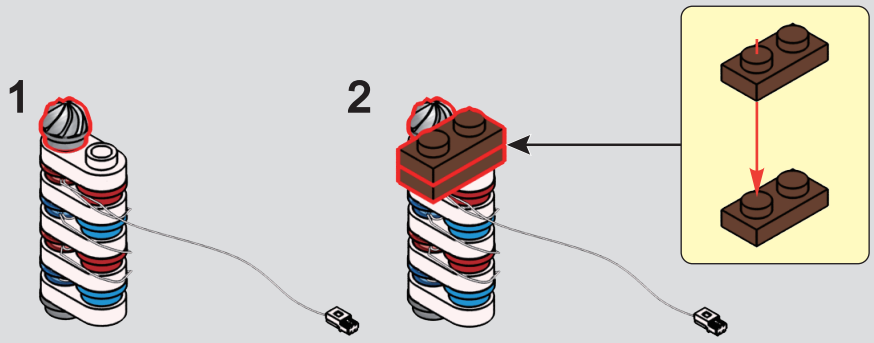

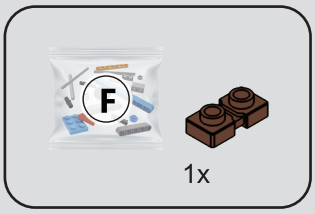

130

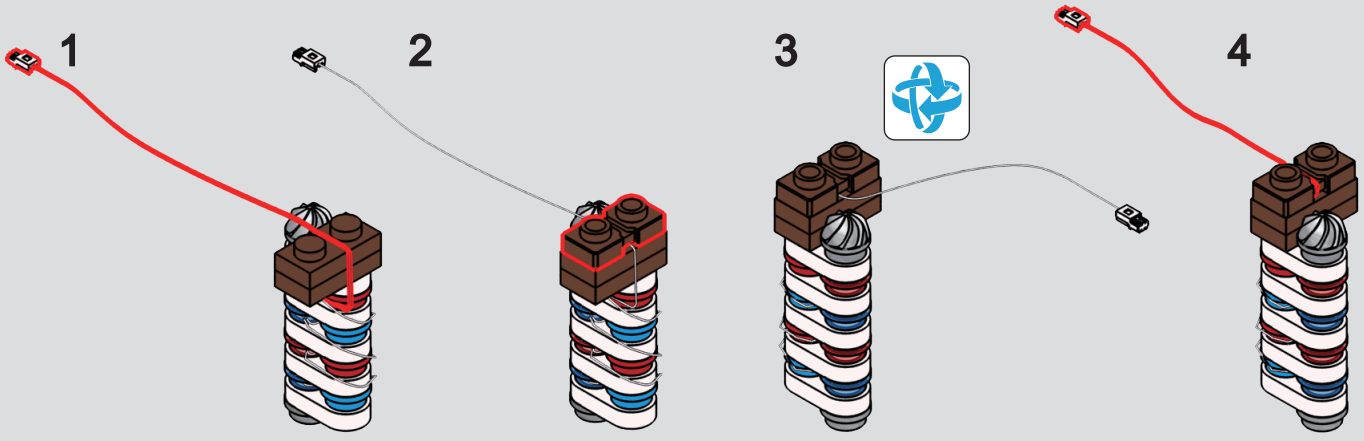

131


THE RULES TO ALWAYS BEING A GENTLEMAN
TRUST ME I HAVE A BEARD
BEARD & BOB'S
BARBER SHOP
REAL MEN GO TO REAL BARBERS
BREADLOCS

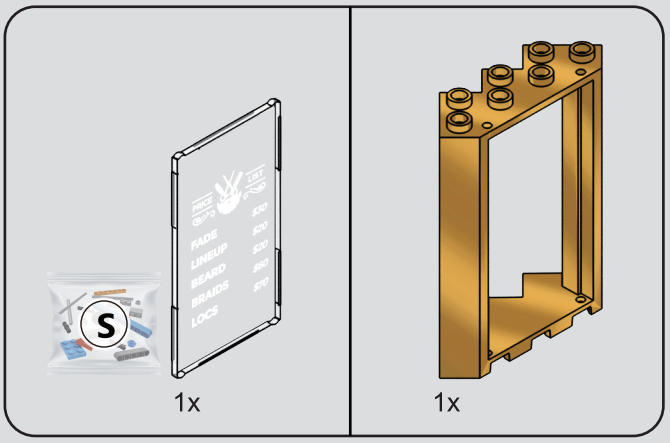

132

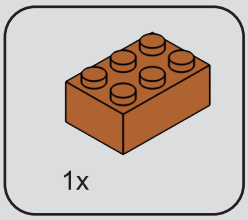
1x

133


BEARD & BOB'S
BARBER SHOP
REAL MEN GO TO
THE RULES TO ALWAYS BEING A
TRUST ME I HAVE A
BREADLOSS
FADE $30
LINEUP $20
BEARD $30
BRAIDS $60
LOCS $70

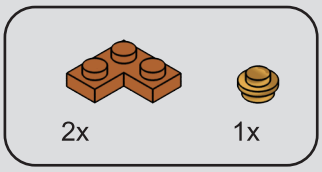
2x
1x

134


THE RULES TO ALWAYS BEING A GENTLEMAN
TRUST ME I HAVE A BEARD
BEARD BOB'S
BARBER SHOP
REAL MEN GO TO REAL BARBERS
FADE
AFRO
BRAIDS
DREADLOCS
PRICE
LIST
FADE $30
LINEUP $20
BEARD $20
BRAIDS $60
LOCS $70

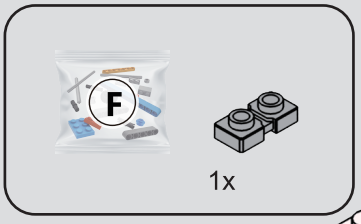
F
1x

135

1


BEARD & BOB'S
BARBER SHOP
REAL MEN GO TO
THE RULES TO ALWAYS BEING A
TRUST ME I HAVE A
DREADLOCS
LINEUP
BEARD
BRAIDS
LOCS

2


BEARD & BOB'S
BARBER SHOP
REAL MEN GO TO
DREADLOCS
LINEUP
BEARD
BRAIDS
LOCS

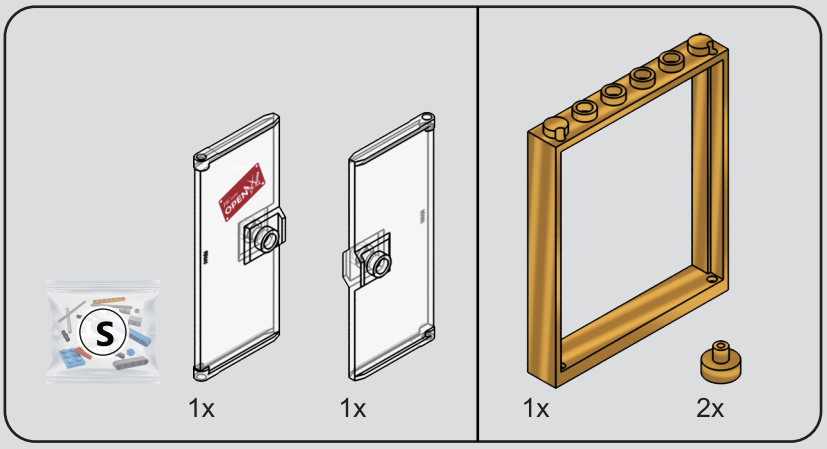

136

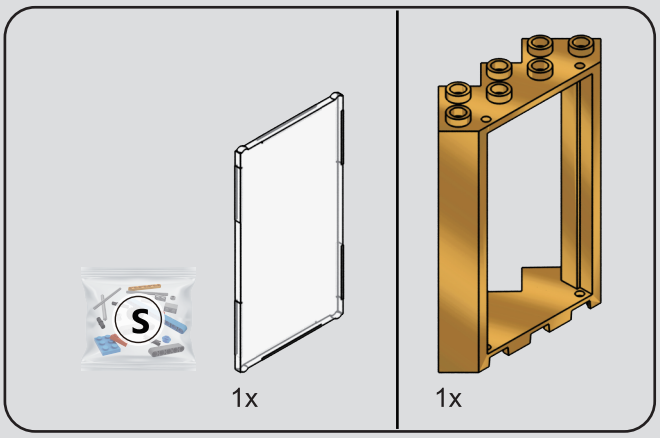
S
1x
1x

137


THE RULES TO ALWAYS BEING A GENTLEMAN
TRUST ME I HAVE A BEARD
BEARD BOB'S
BARBER SHOP
REAL MEN GO TO REAL BARBERS
OPEN
PRICE LIST
FADE $30
LINEUP $20
BEARD $40
BRAIDS $50
LOCS $70

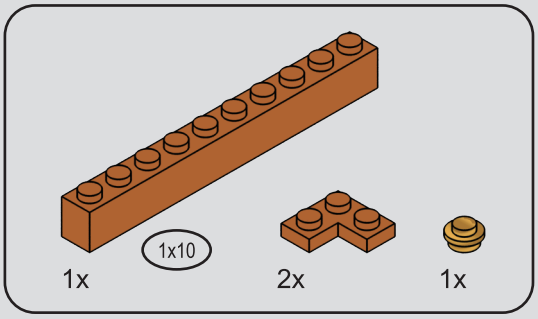

138

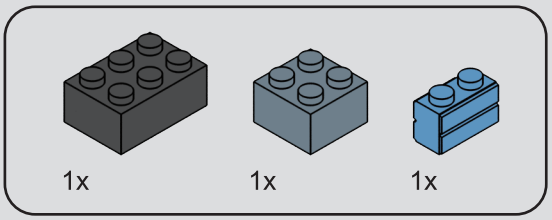

139

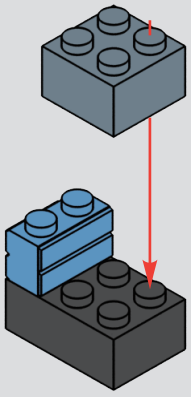

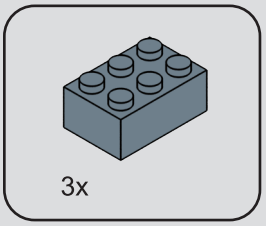

140

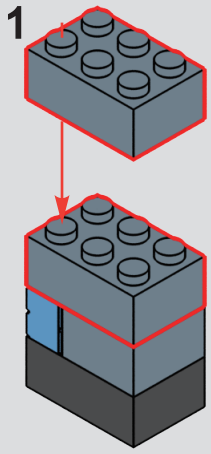

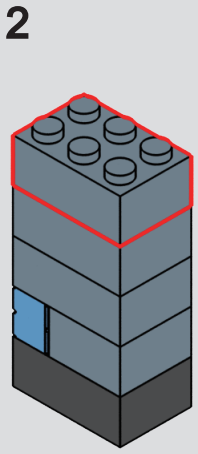

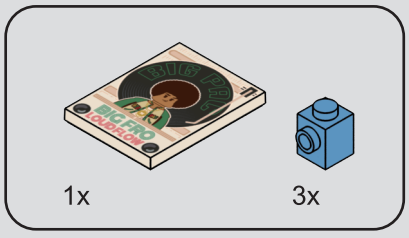

141

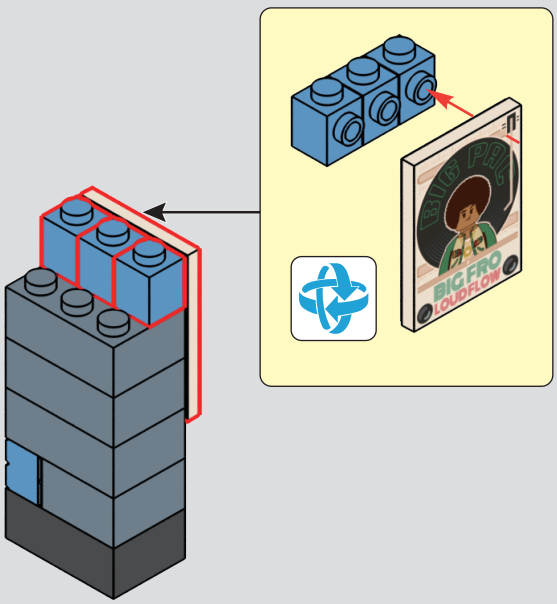

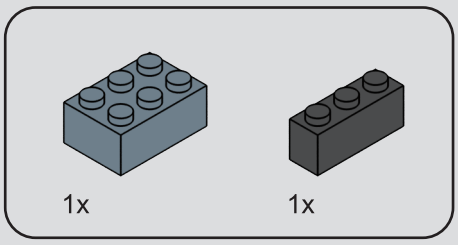

142

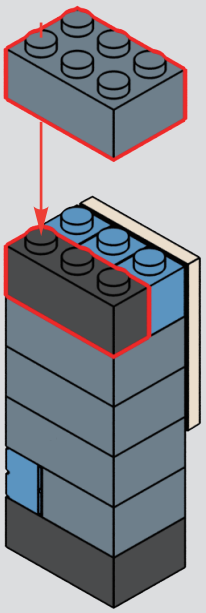

143



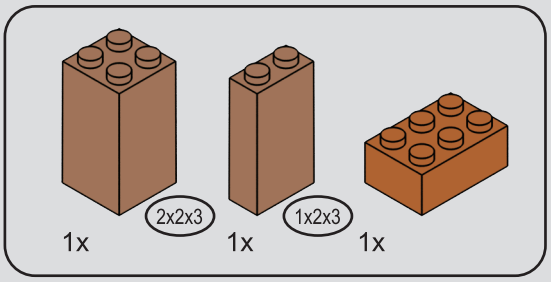

144

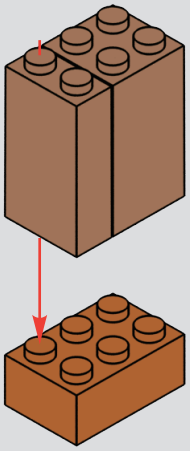

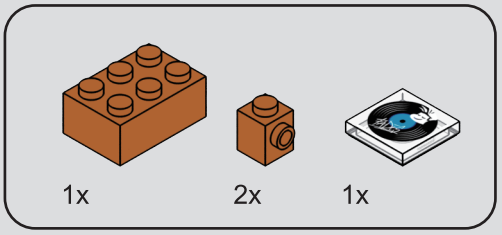

145

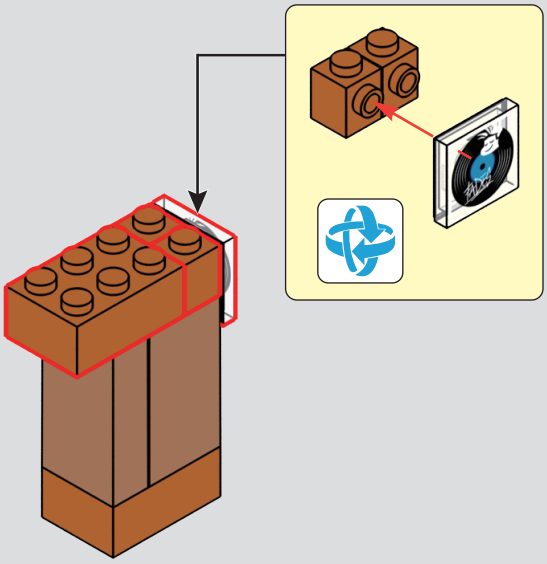

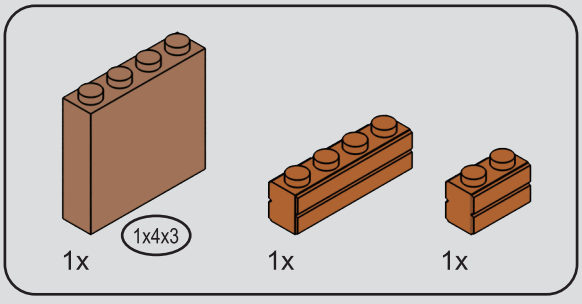

146

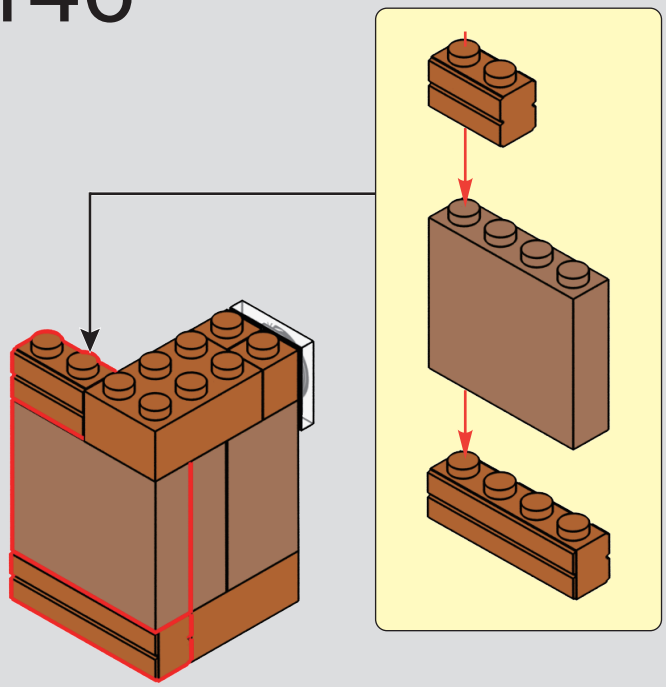

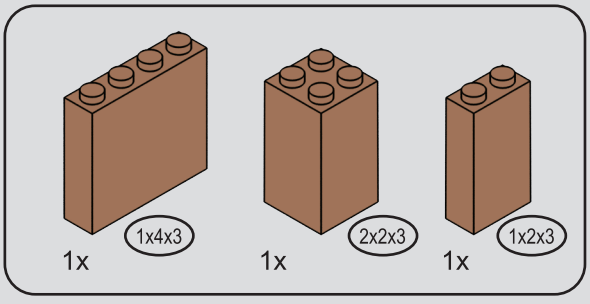

147

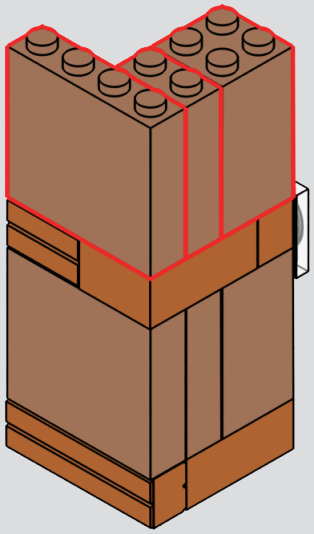

148



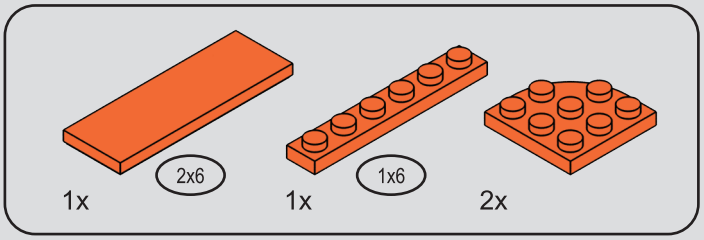

149

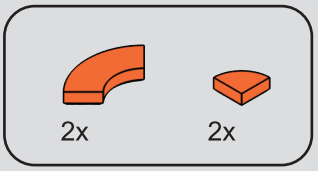

150

1

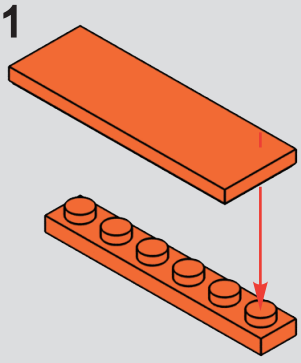

2

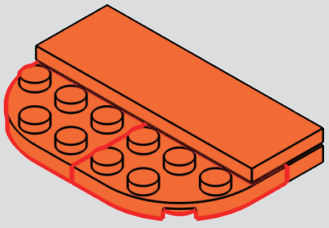

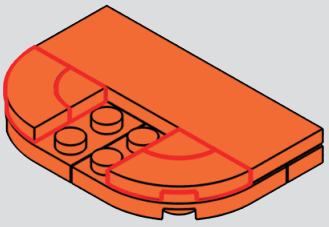

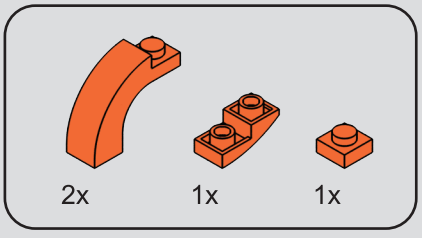

151

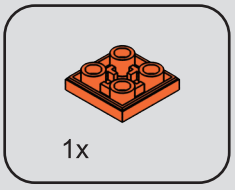

152

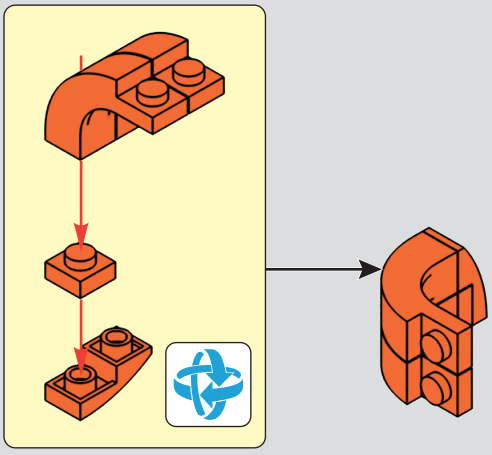

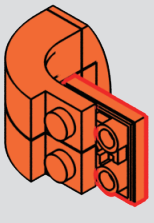

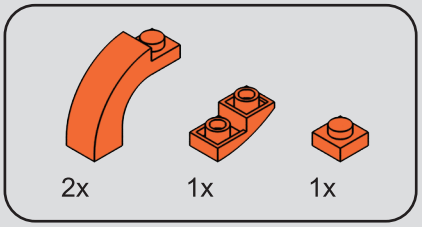

153

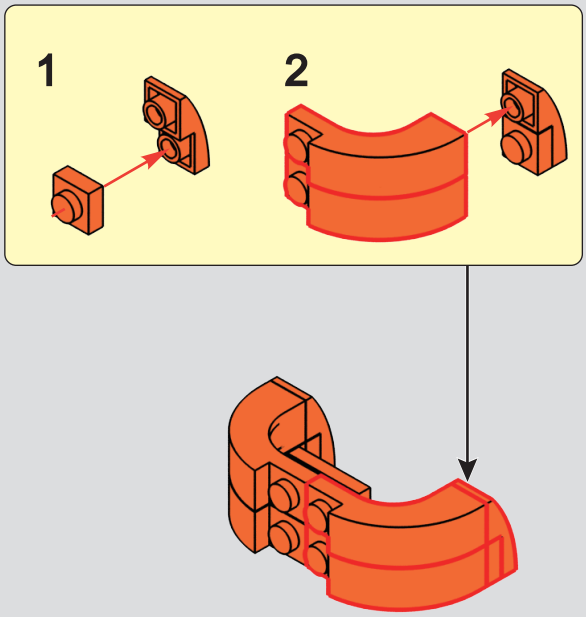

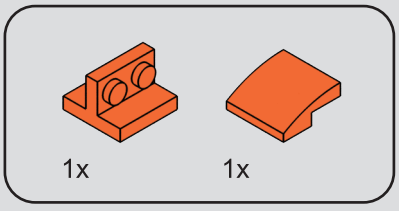

154

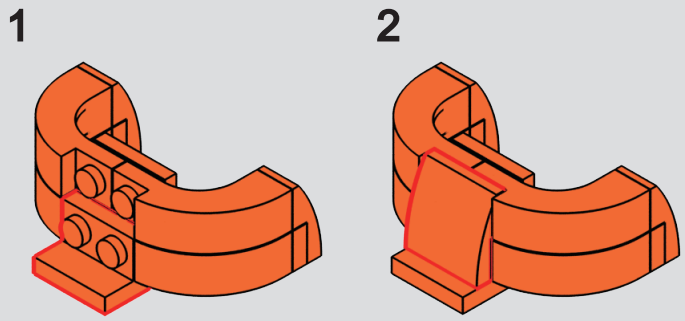

155

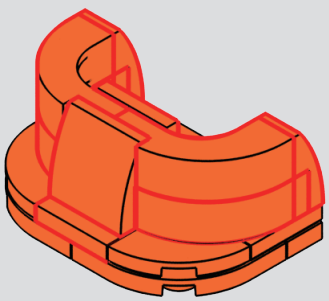

156



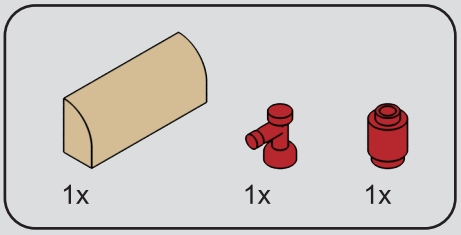

157



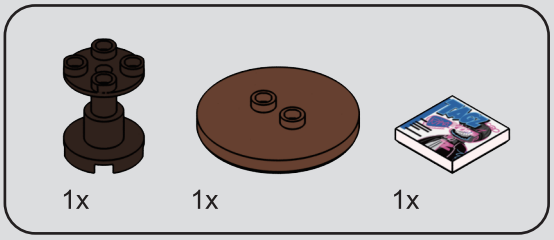

158



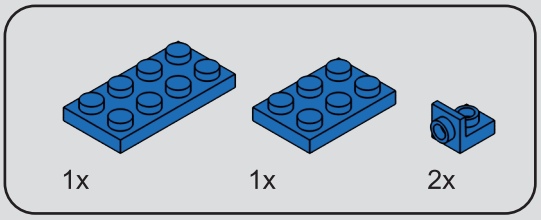

159

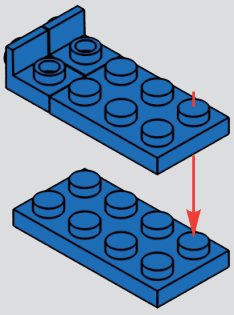

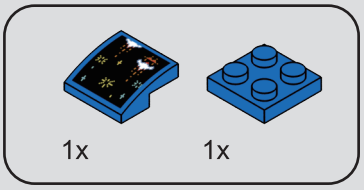

160

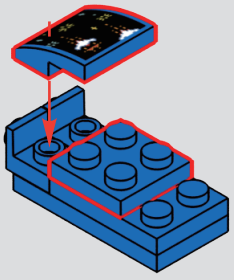

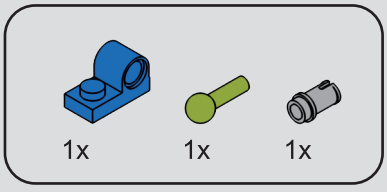

161

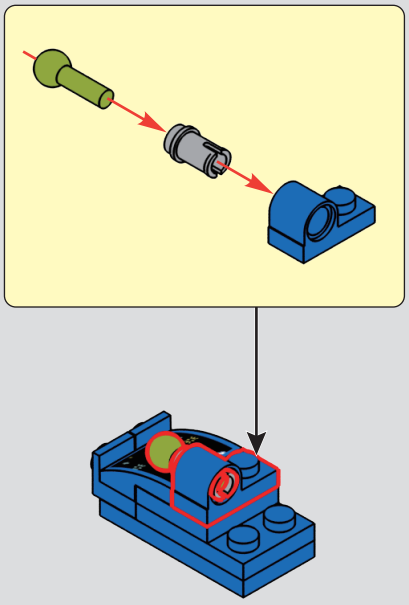

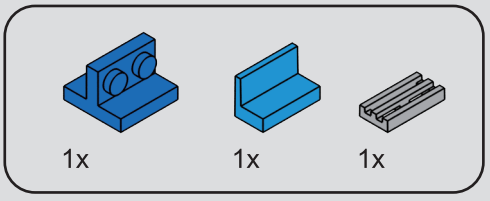

162

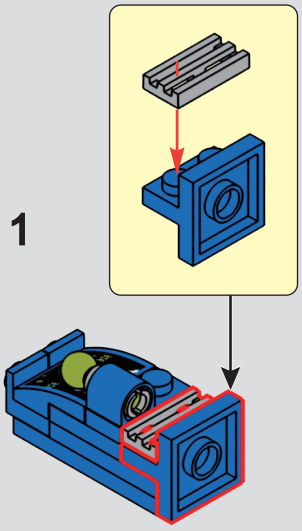

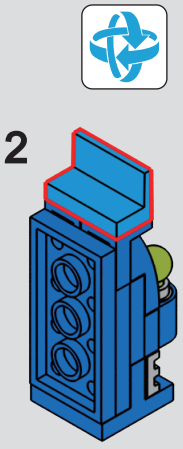

163



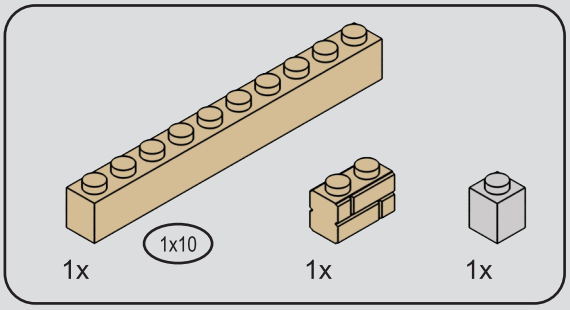

164

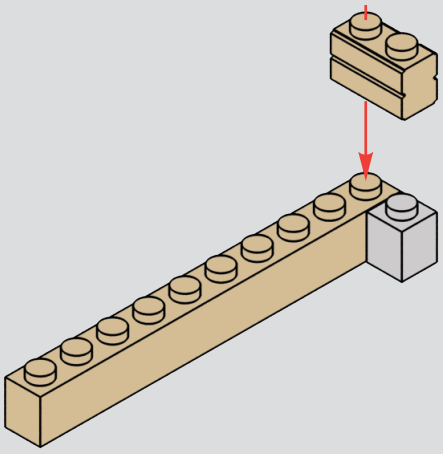

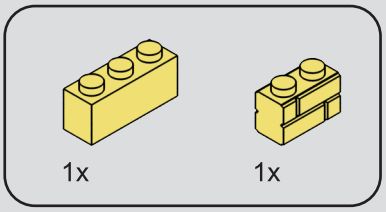

165

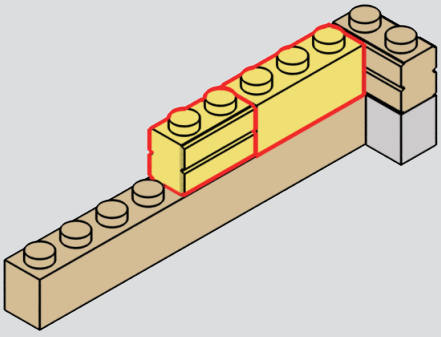

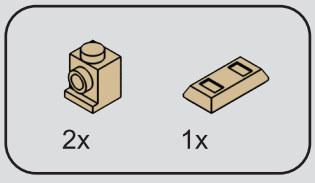

166

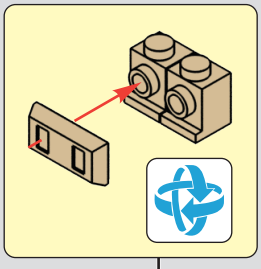

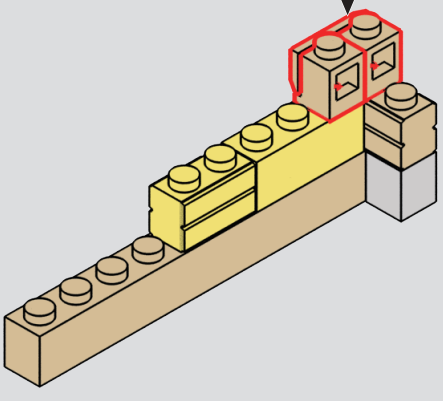

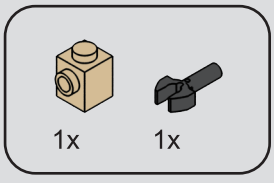

167

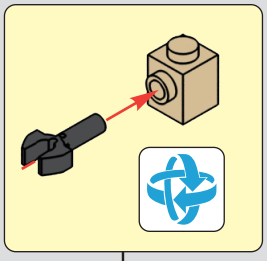

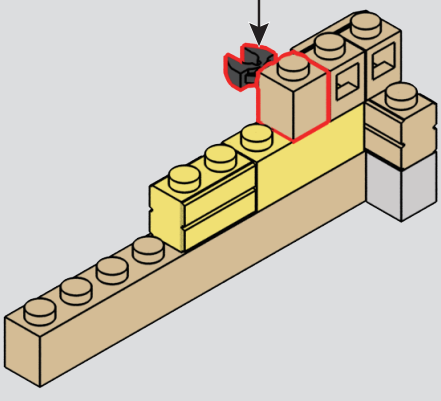

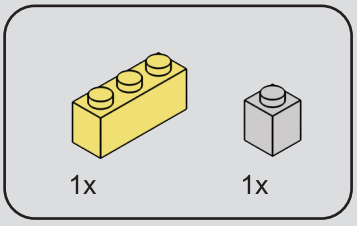

168

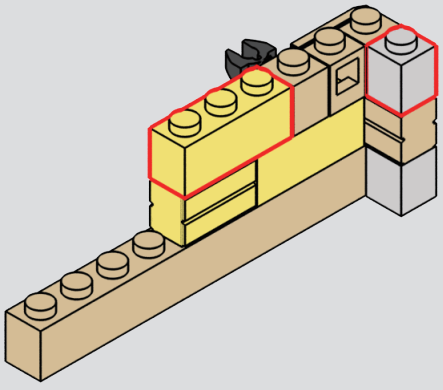

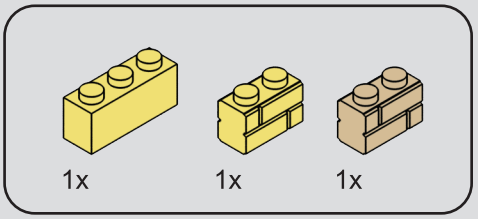

169

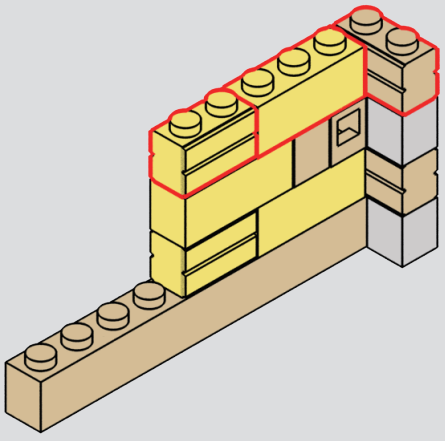

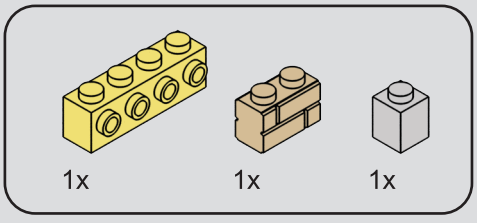

170

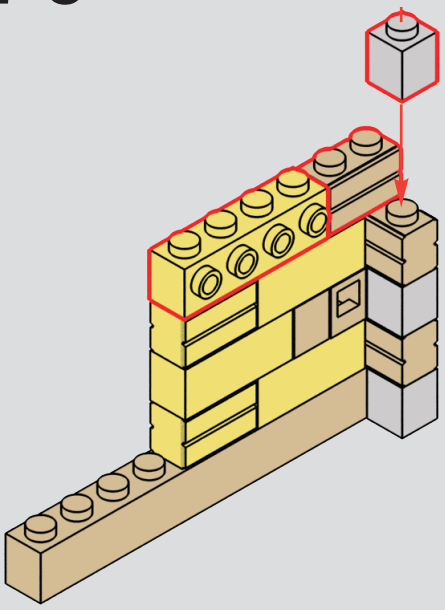

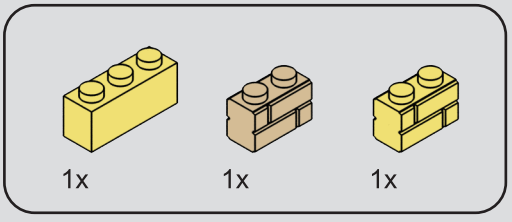

171

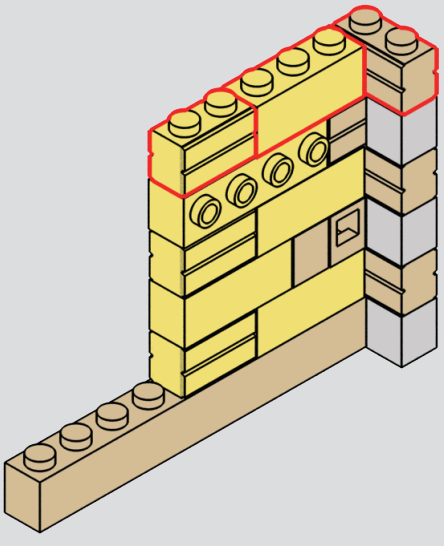



172

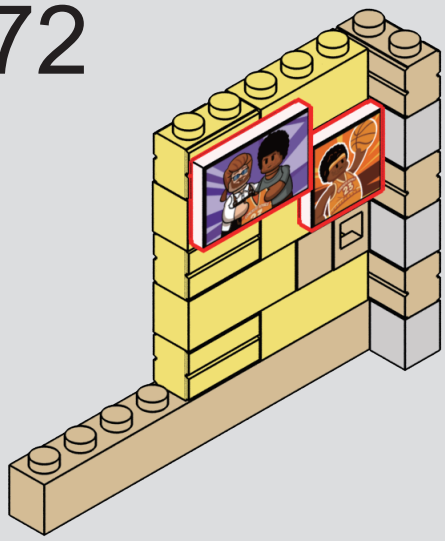

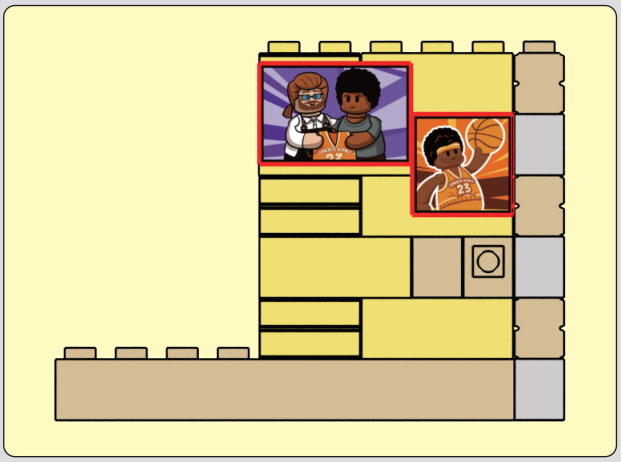

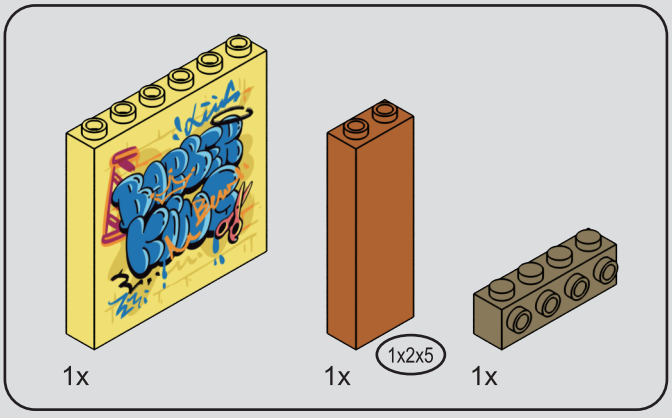

173

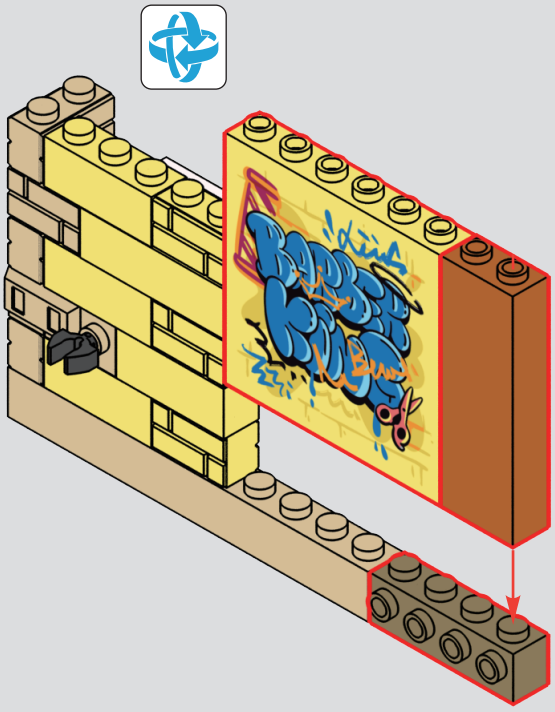

174


REAL MEN GO TO BEARD BARBERS.
BEARD & BOB'S
BARBER SHOP
THE RULES TO ALWAYS BEING A GENTLEMAN
TRUST ME I HAVE A BEARD

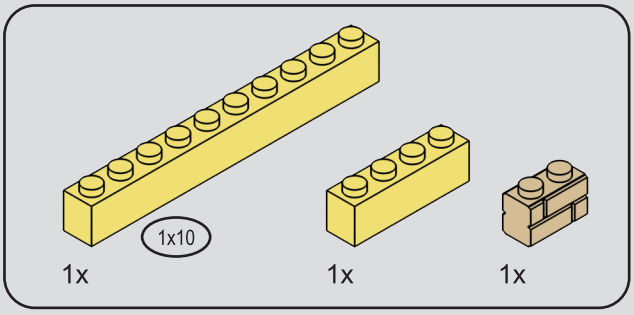

175

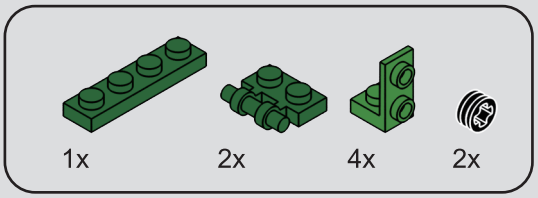

176

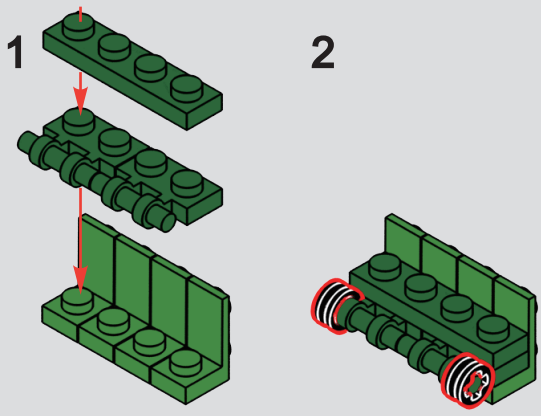

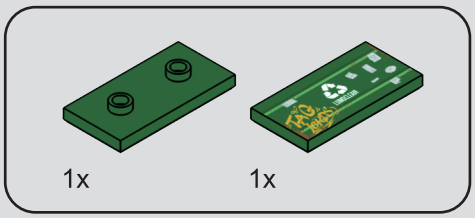

177

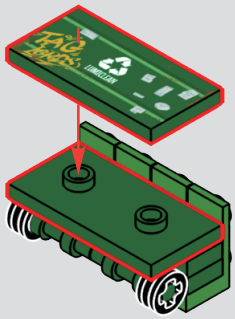

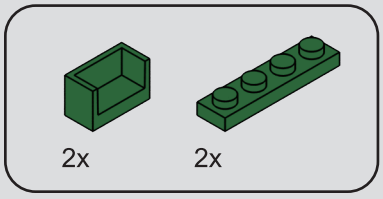

178

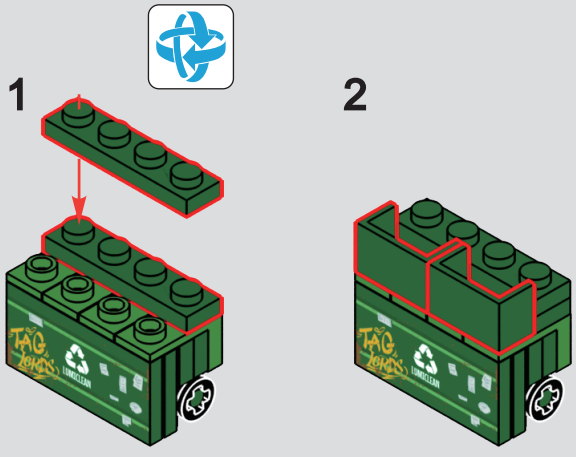

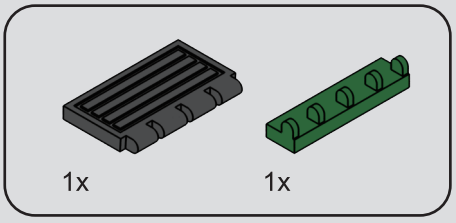

179

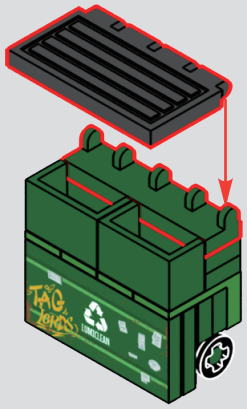

180


REAL MEN GO TO BARBER SHOP
BEARD & BOB'S
BARBER SHOP
THE RULES TO ALWAYS BEING A GENTLEMAN
TRUST ME I HAVE A BEARD

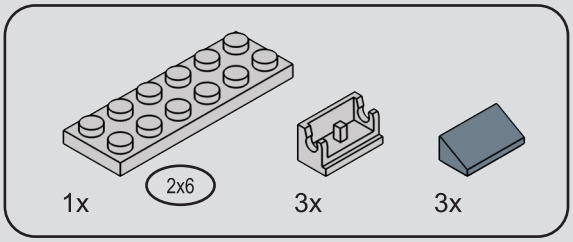

181

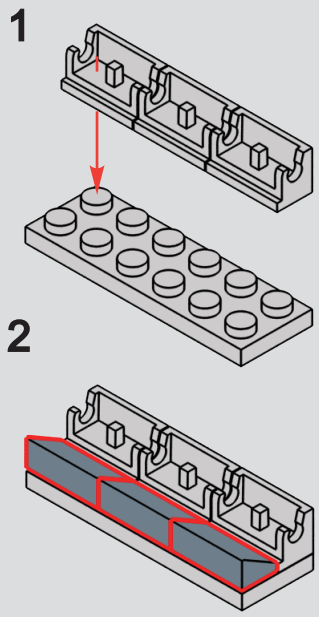

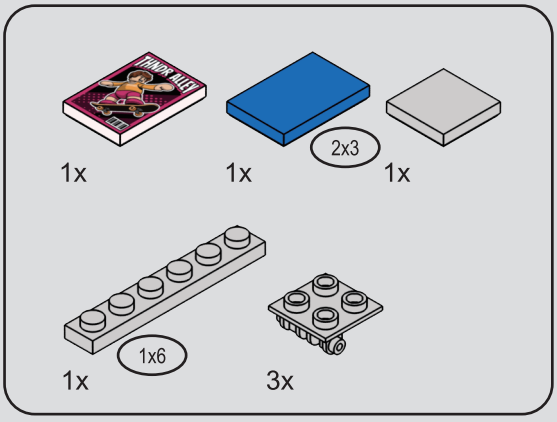

182

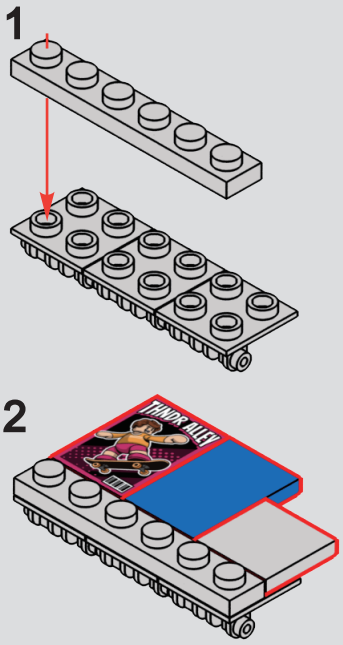



183

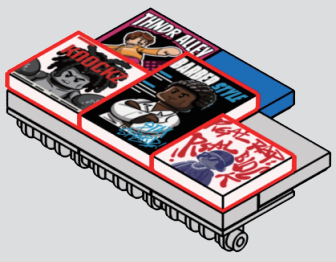

184

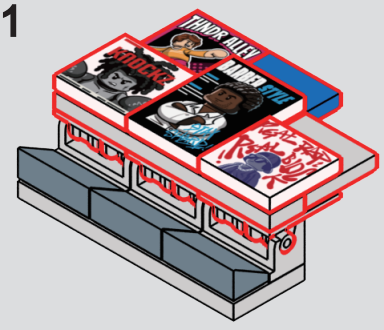



185


REAL MEN GO TO
BEARD & BOB'S
BARBER SHOP
THE RULES TO ALWAYS BEING A
TRUST ME I WAVE A BEARD
THNDR ALLEY
BARBER STYLE
KNOCK!

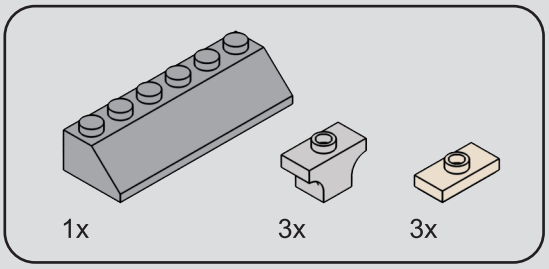

186

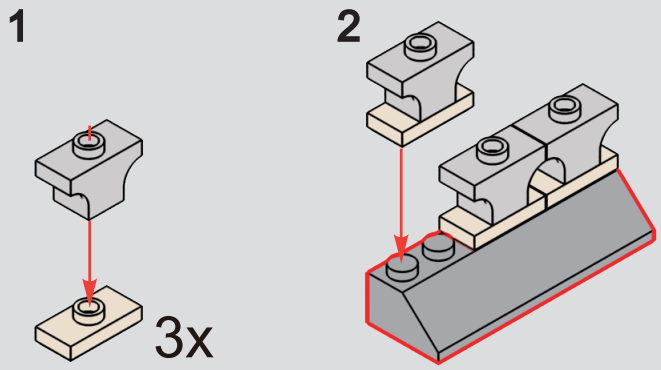

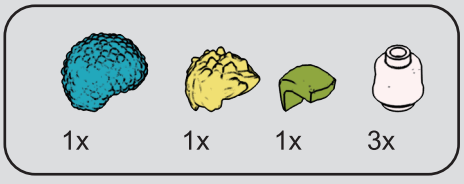

187

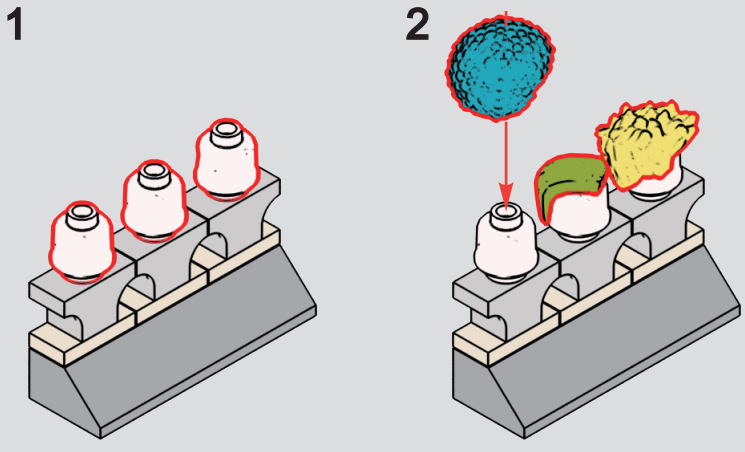

188


THE RULES TO ALWAYS BEING A GENTLEMAN
TRUST ME I HAVE A BEARD
BEARD BOB'S
BARBER SHOP
REAL MEN GO TO REAL BARBERS
DREADLOCS
THNDR ALLEY
BARBER STYLE
KNOCK!
TAG LOKI'S

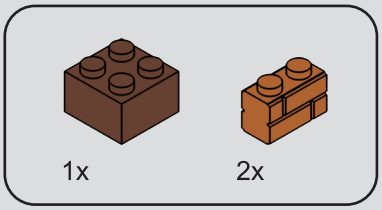

189

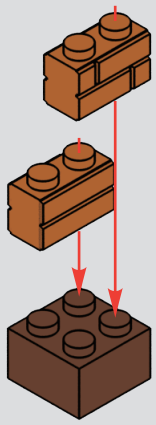

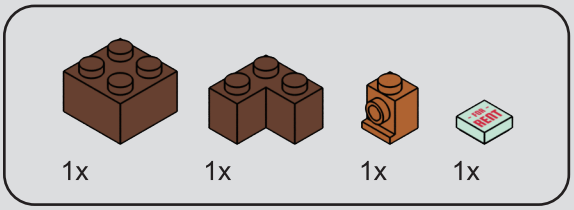

190

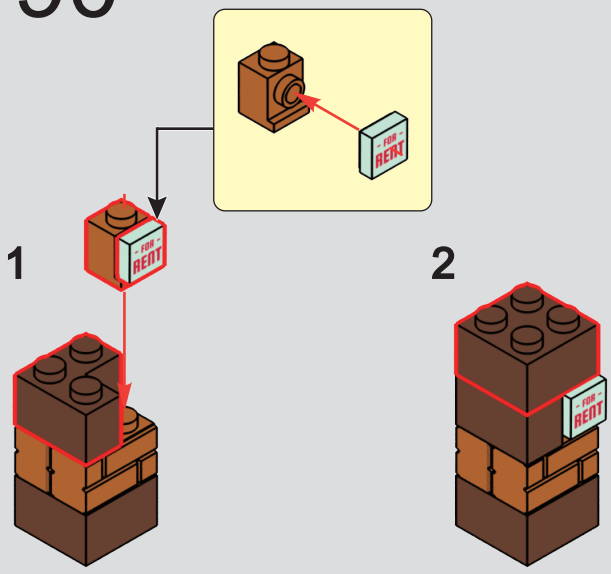

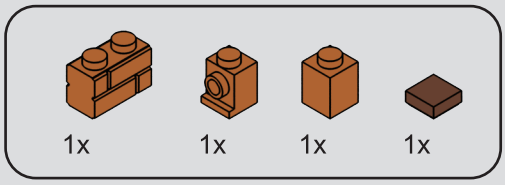

191

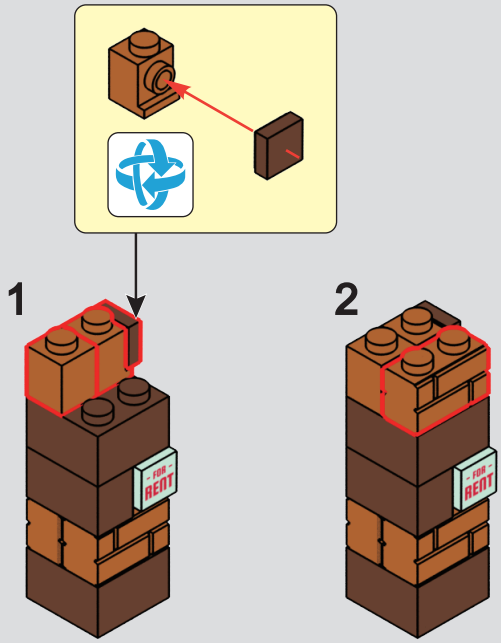

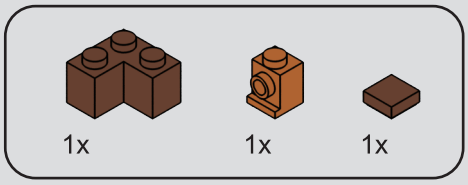

192

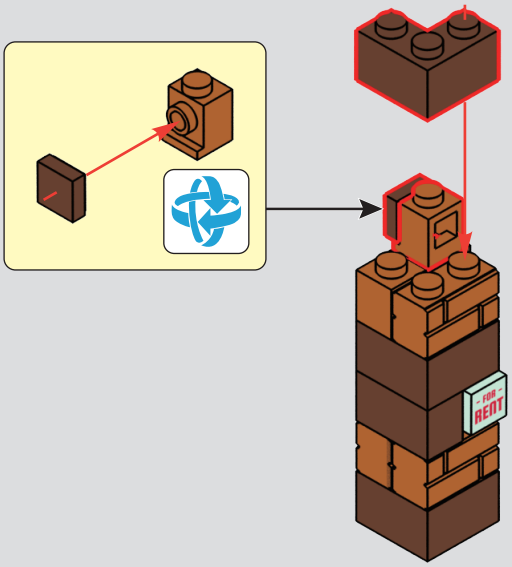

193


REAL MEN GO TO
BEARD & BOB'S
BARBER SHOP
THE RULES TO ALWAYS BEING A
TRUST ME I HAVE A
BREADLOCS
OPEN
FOR RENT

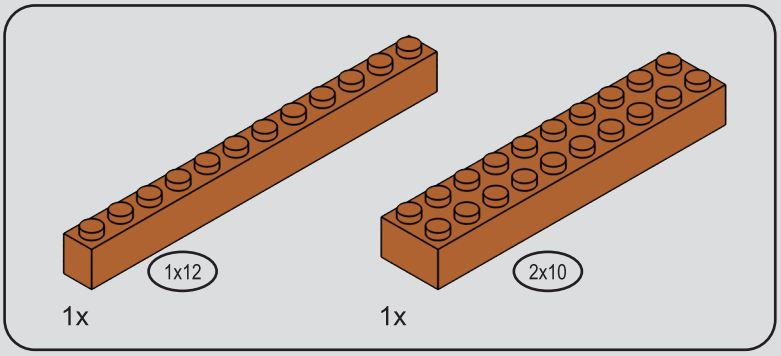
1x12
1x
2x10
1x

194


THE RULES TO ALWAYS BEING A
TRUST ME I HAVE A
BEARD & BOB'S
BARBER SHOP
REAL MEN GO TO
BREADLOCS
OPEN
FOR RENT


4


BARBER SHOP
REAL MEN CO TO
BEARD BOB'S
THE ROLES TO ANSWER BEING A
TRUST ME I HAVE A BARBER
BREAKING LOCS
LINEUP
LOCS
BARBER STYLE
TAG
RENT

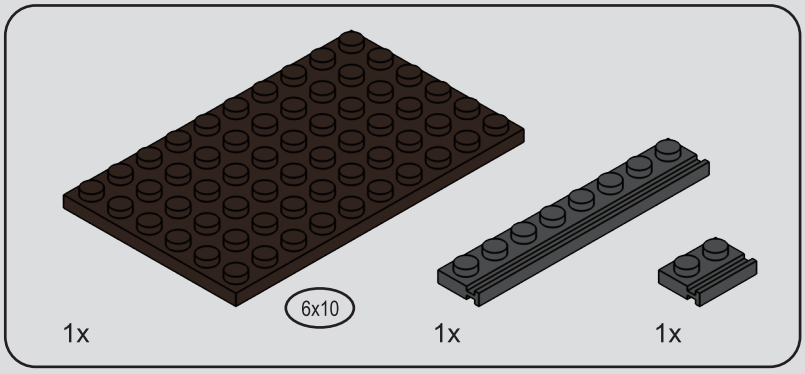

195

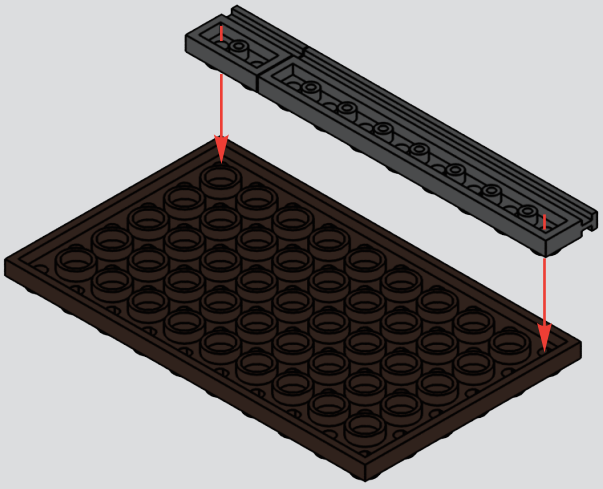

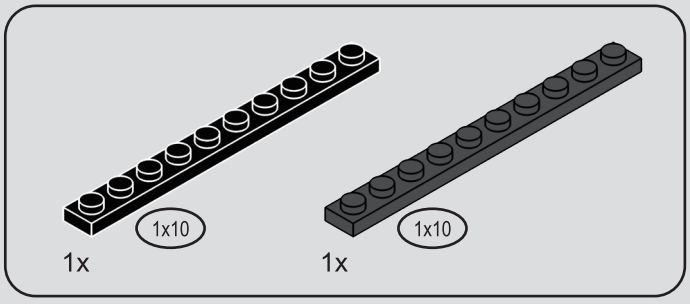

196

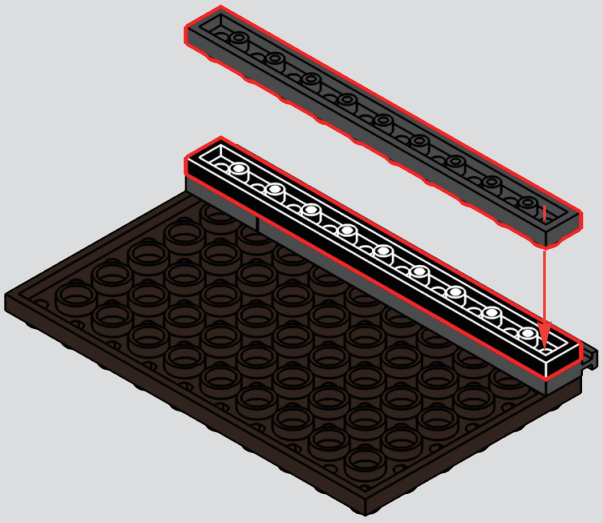

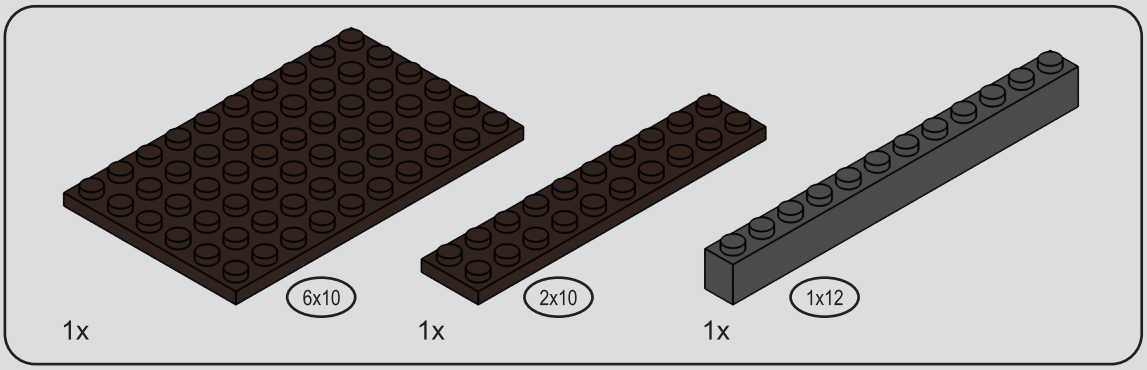

197

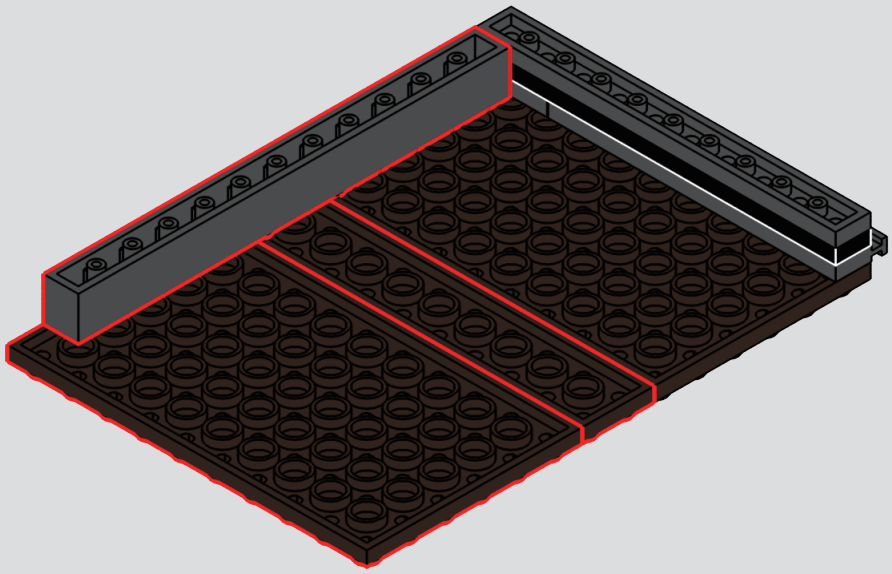

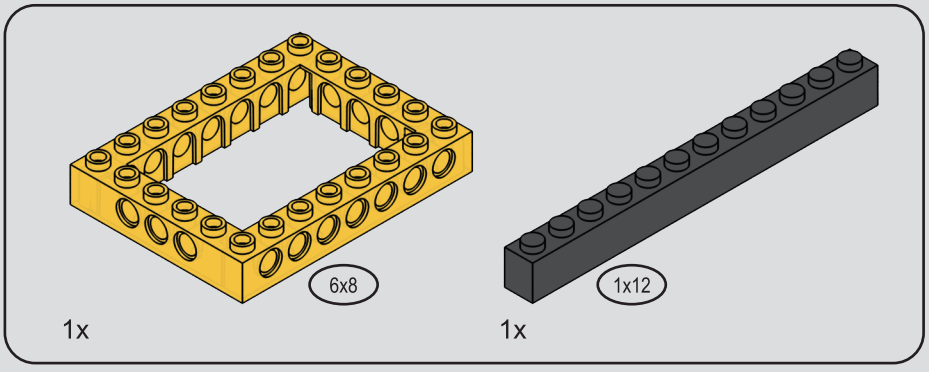

198

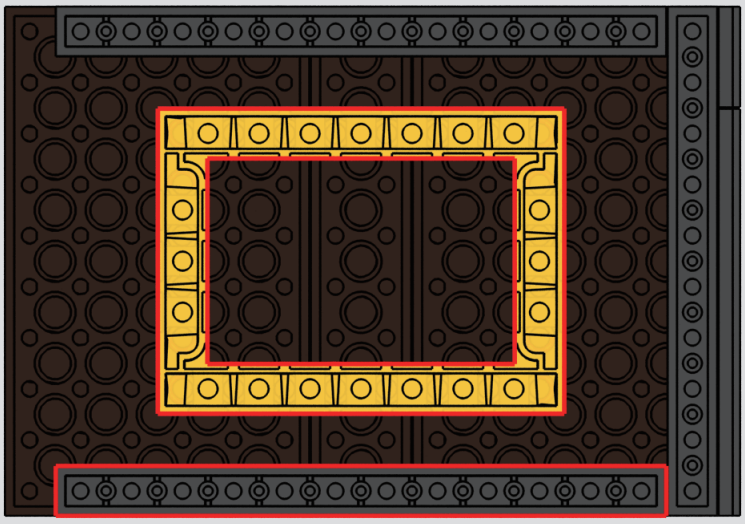

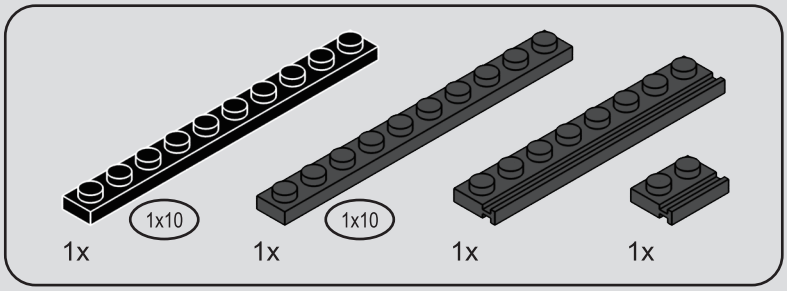

199

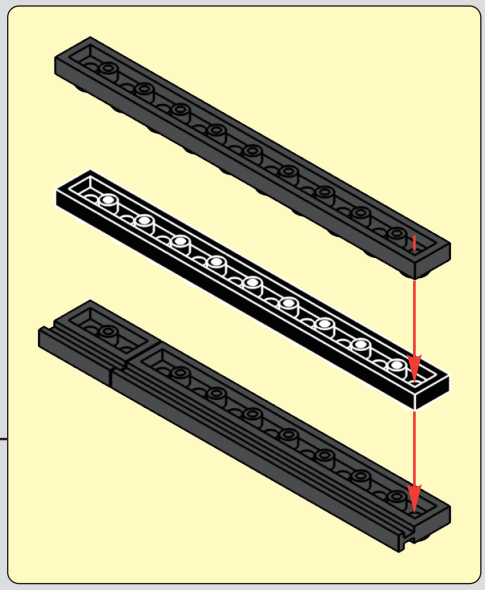

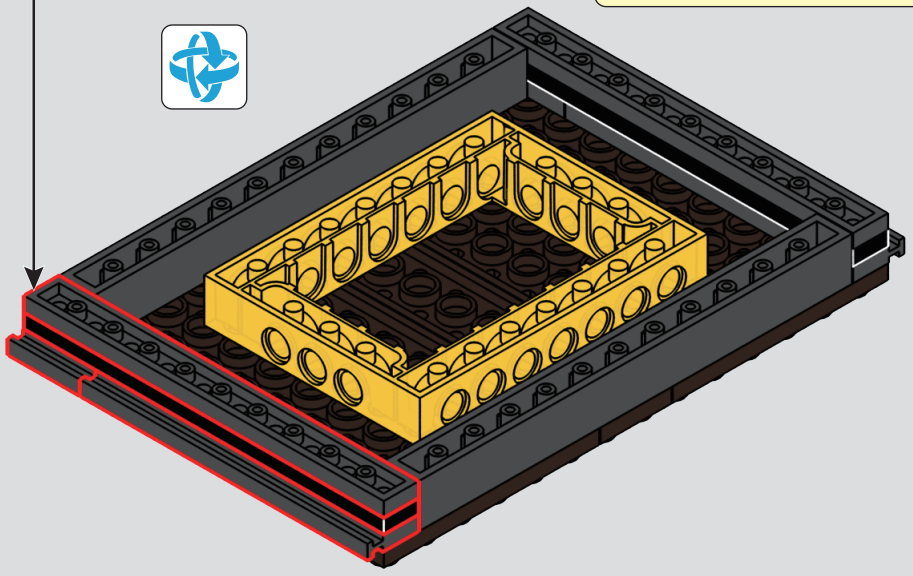

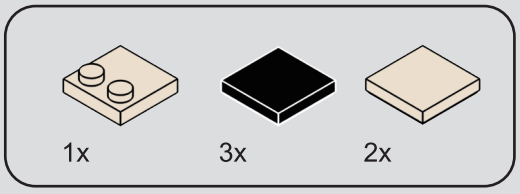

200

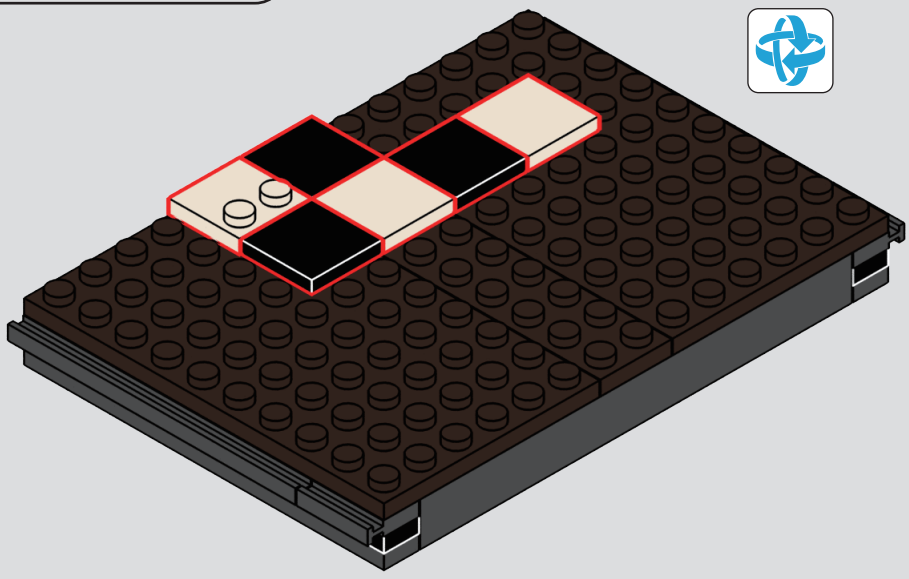

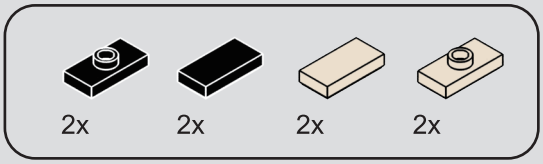

201

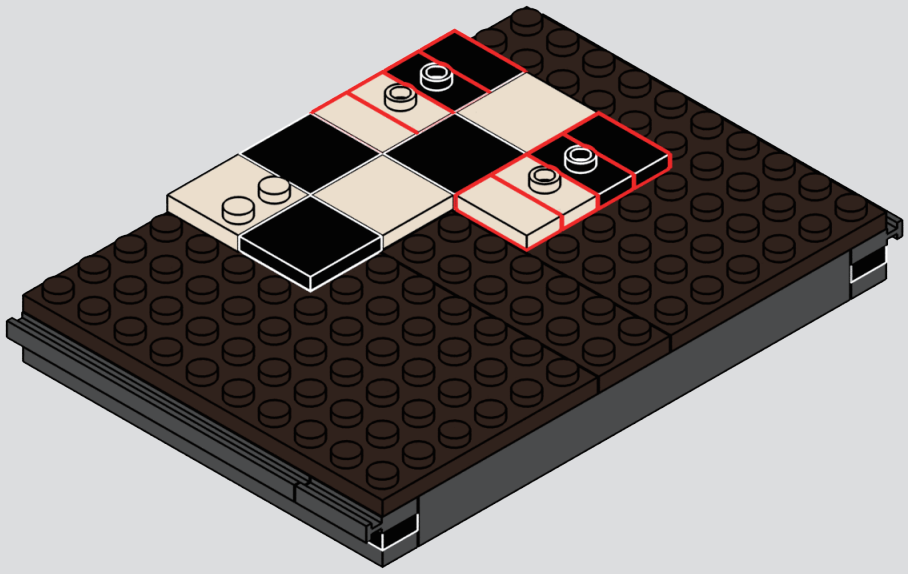

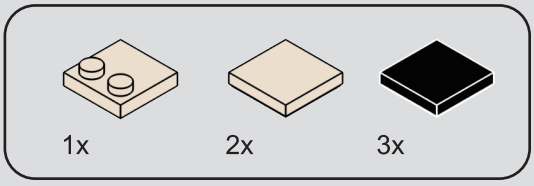

202

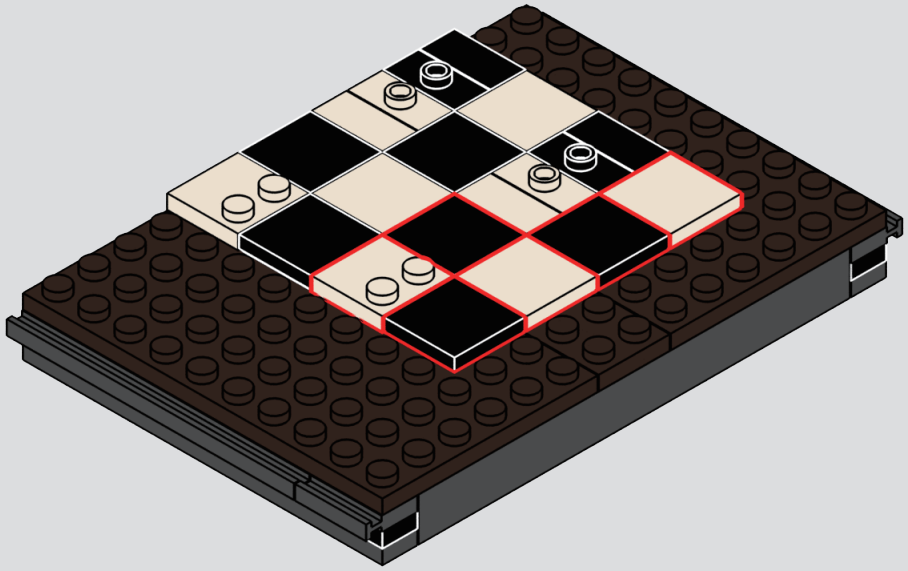

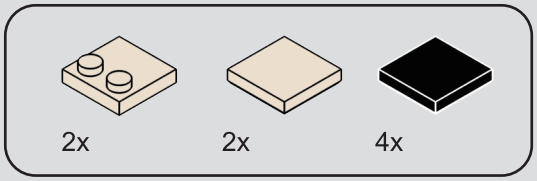

203

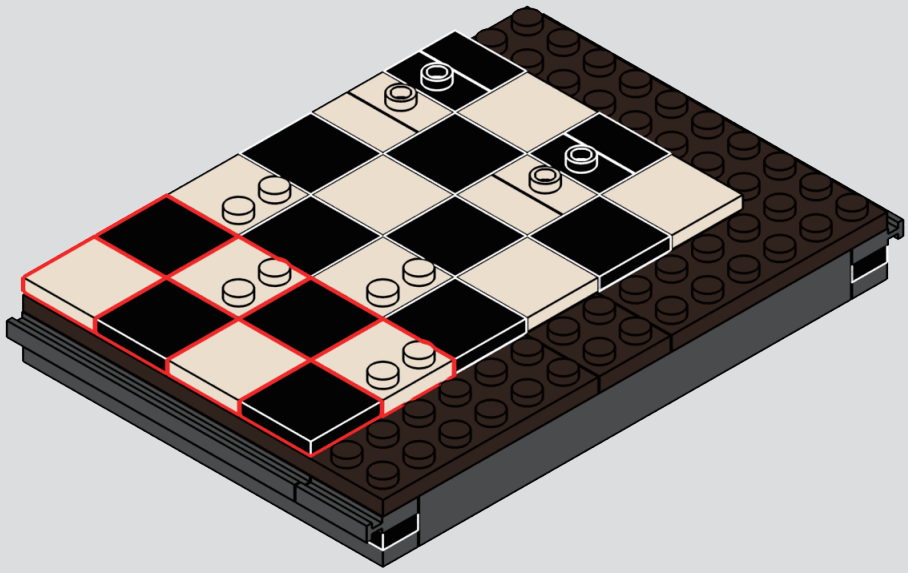

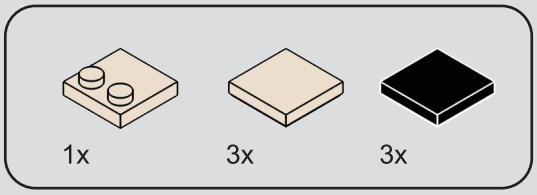

204

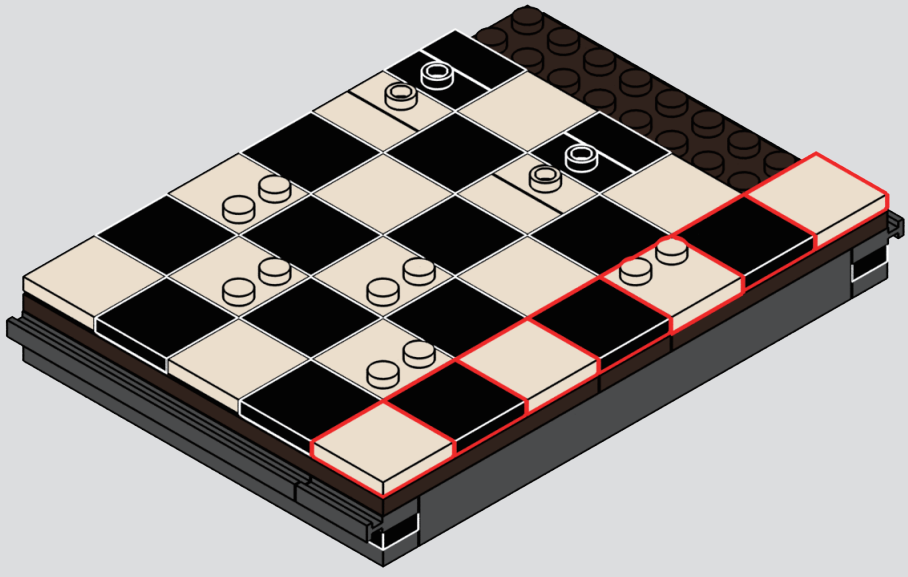

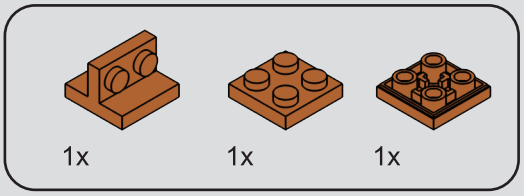

205

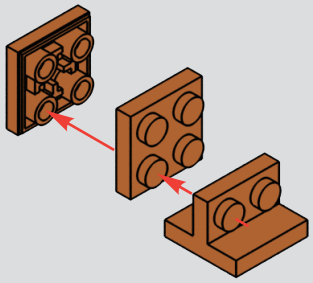

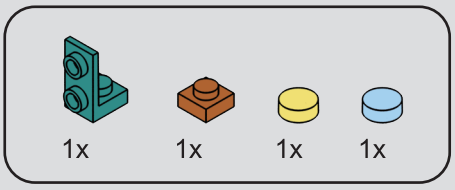

206

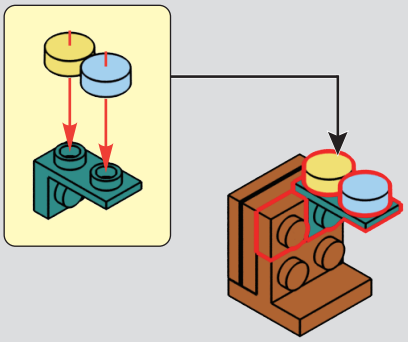

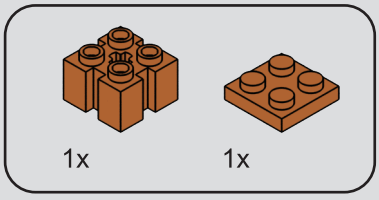

207

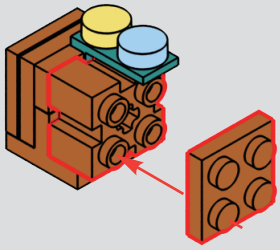

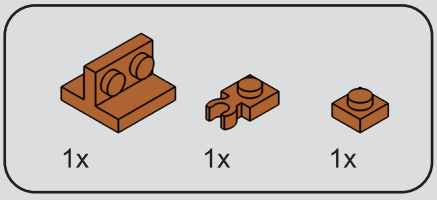

208

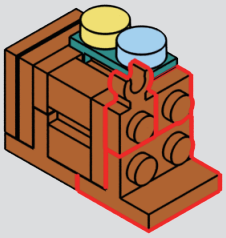

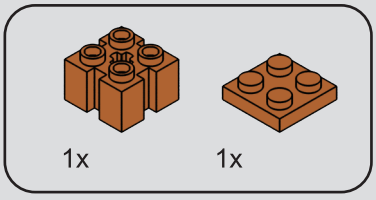

209

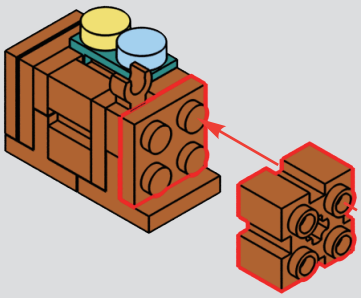

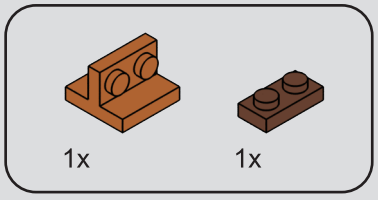

210

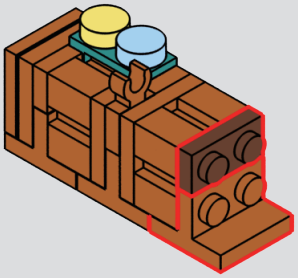

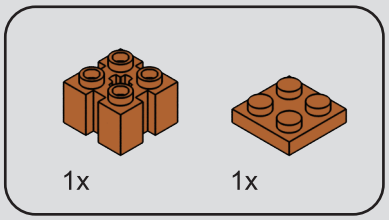

211

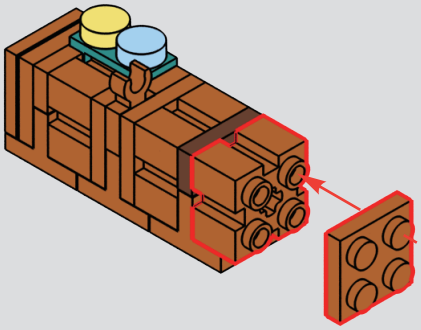

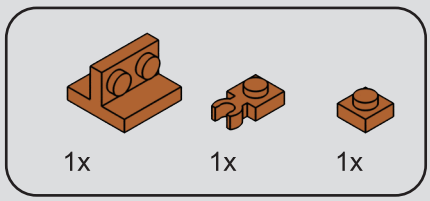

212

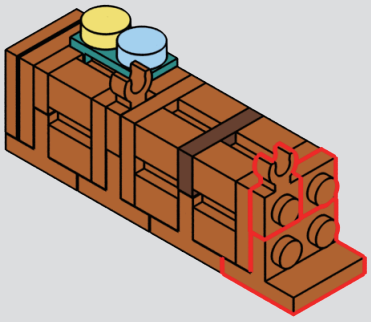

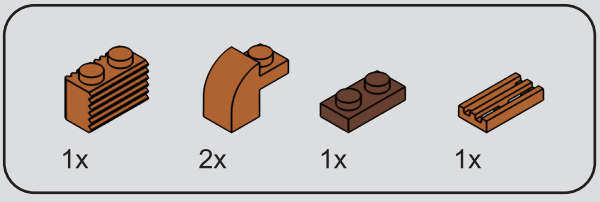

213

1

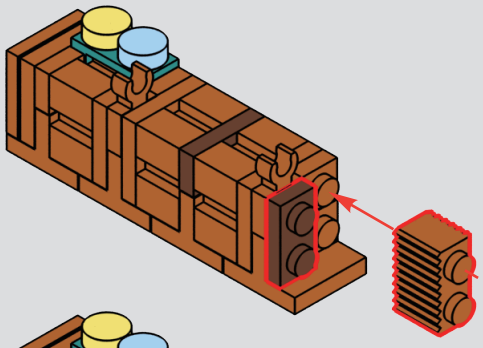

2

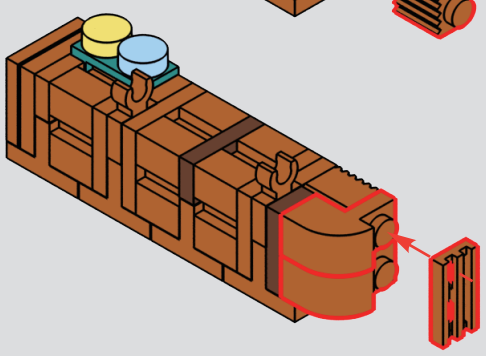

214

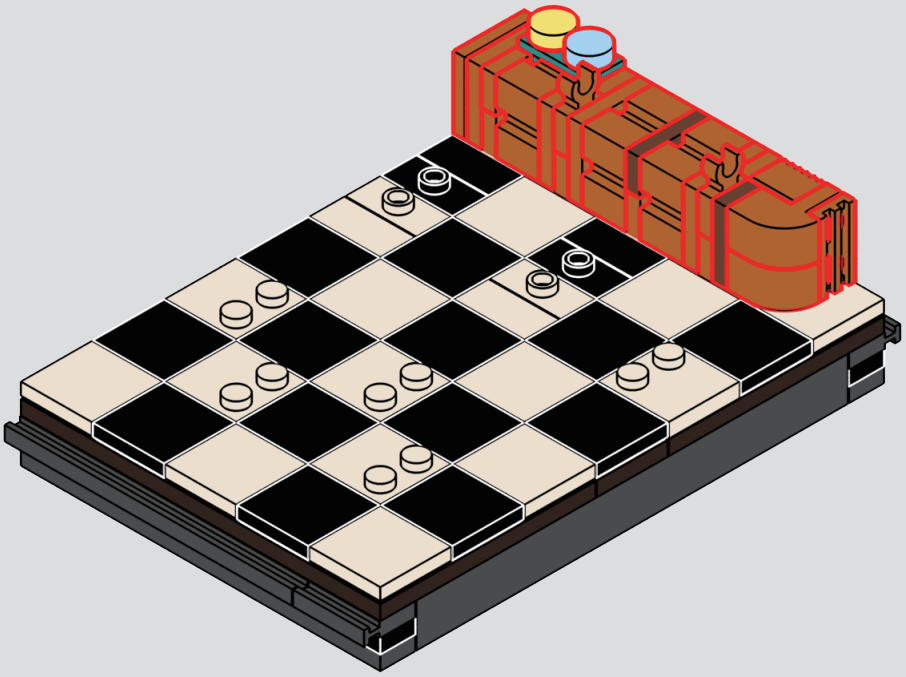

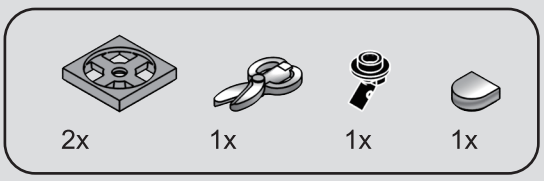

215

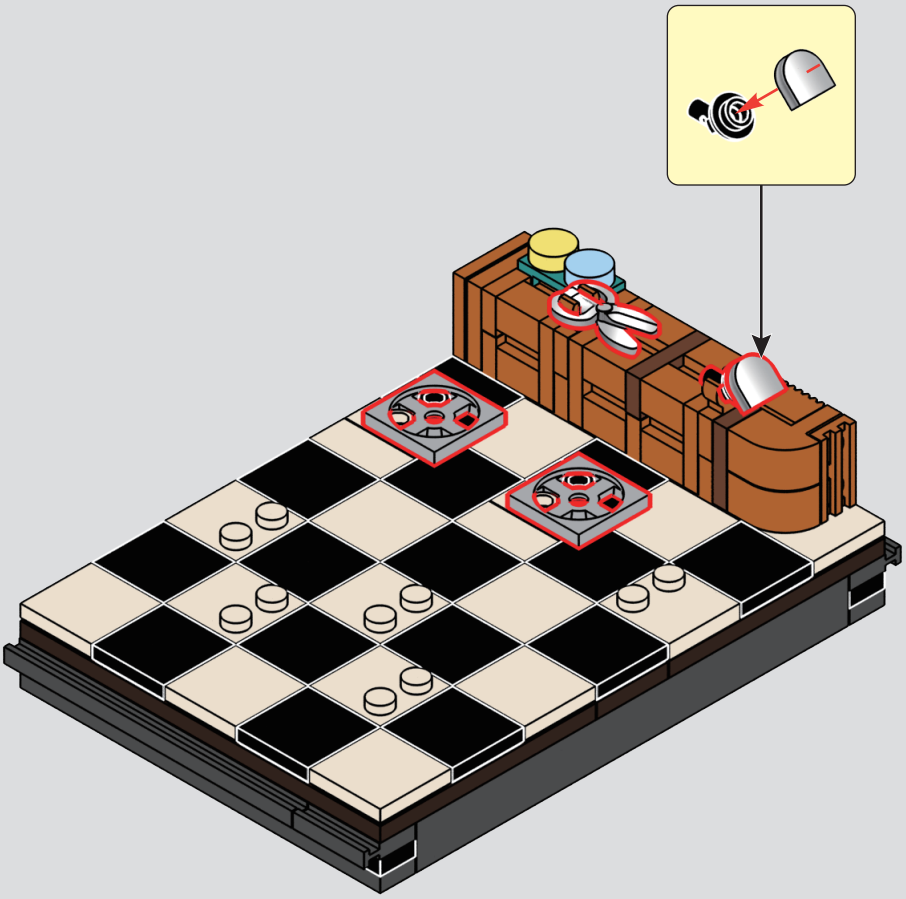

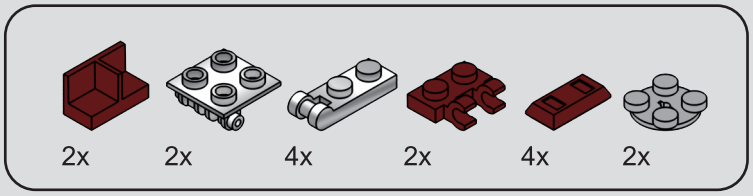

216

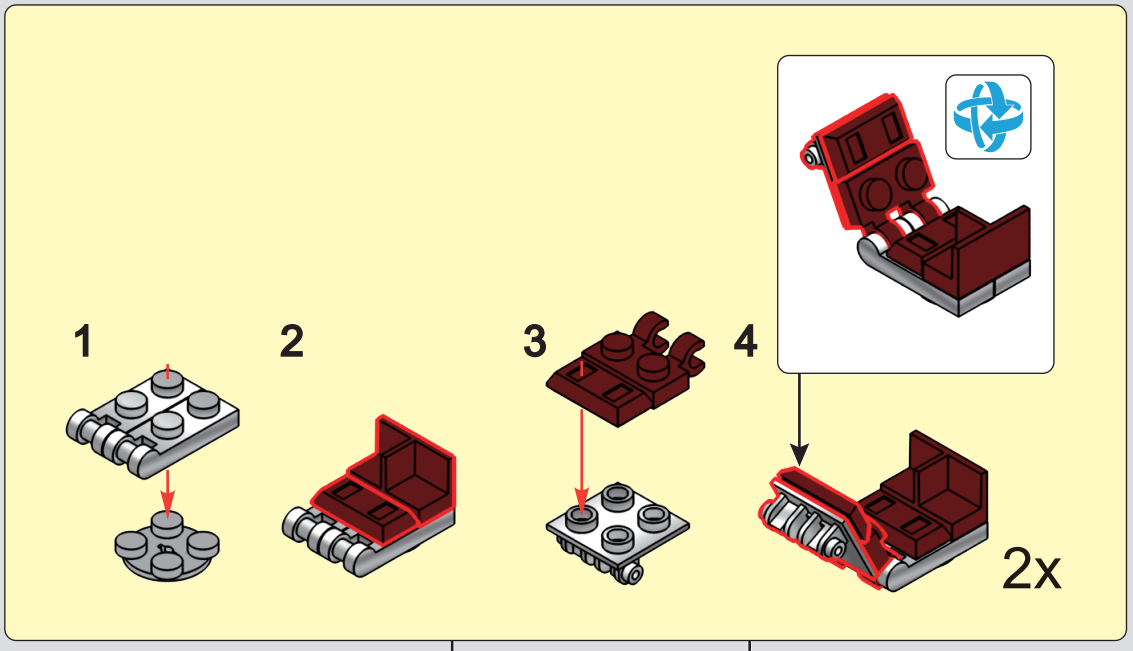

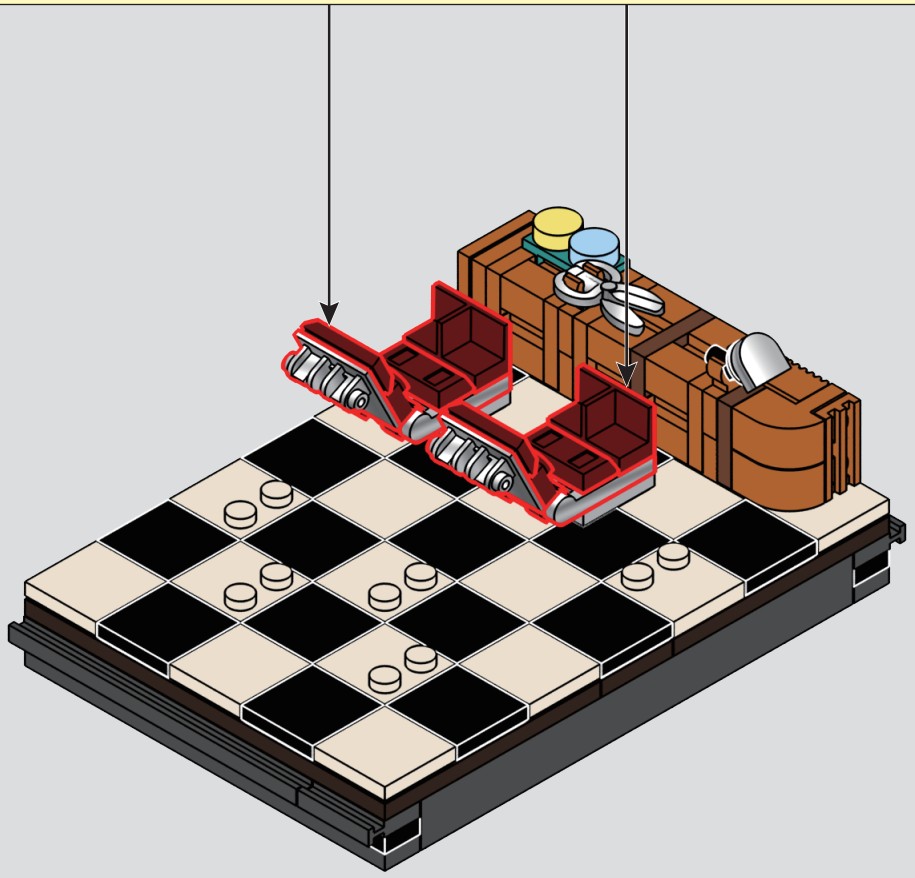

1x

217

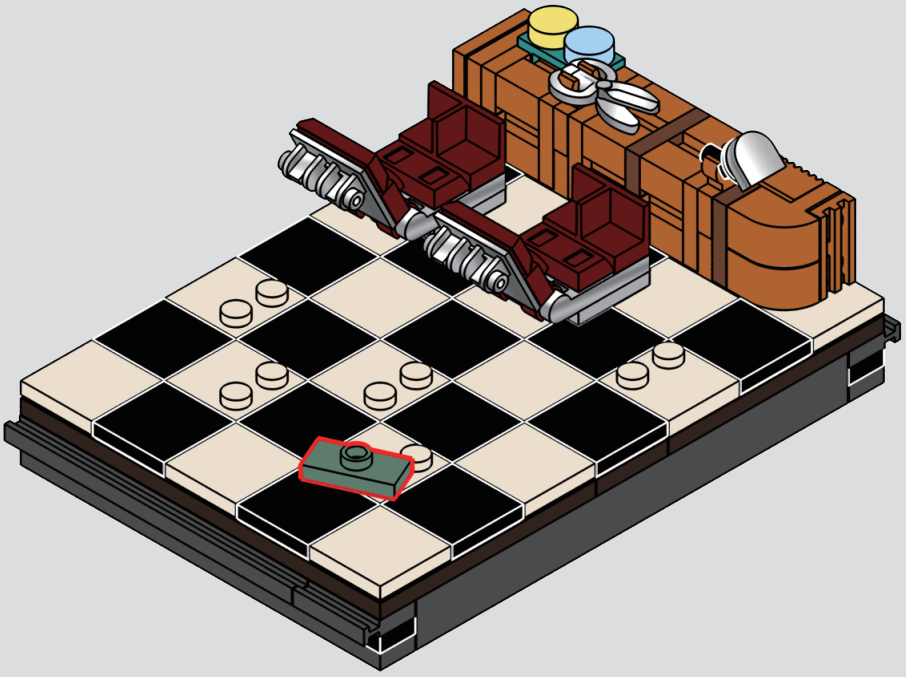

1x 1x 1x 1x 1x

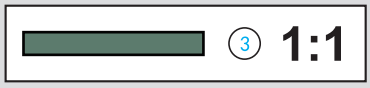

218

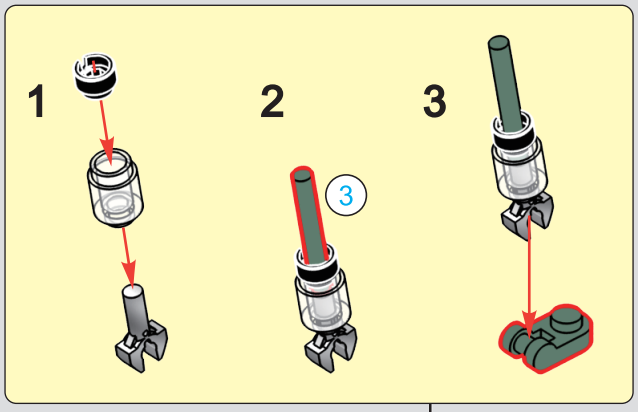

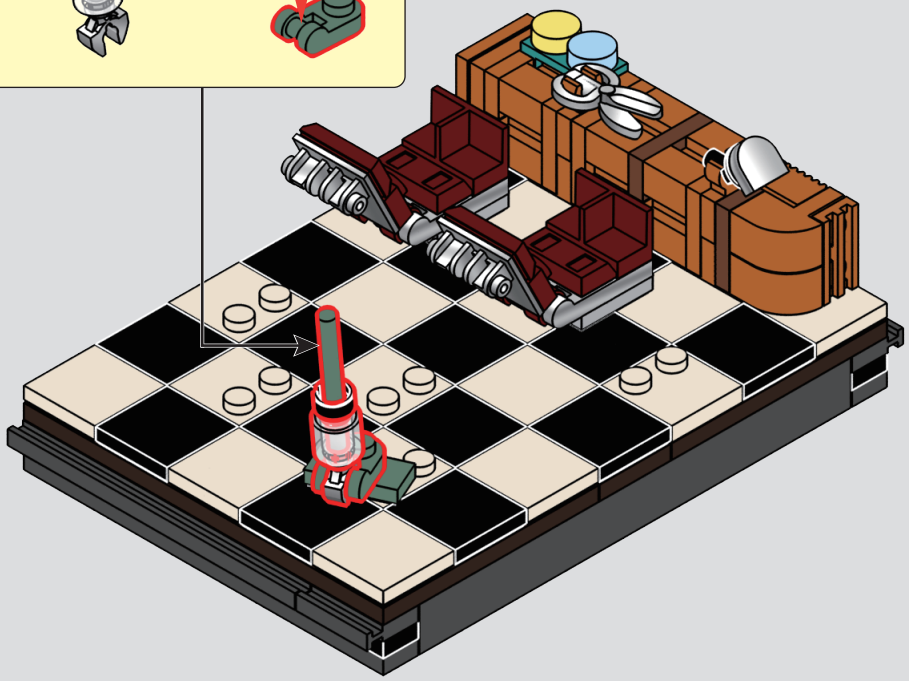

219

1



2



220


BEARD & HOBS
BARBER SHOP
REAL MEN GO TO BARBERSHOPS
DREADLOCS
OPEN

221




5
F
S
LUMIBRICKS
01
LUMIBRICKS
02

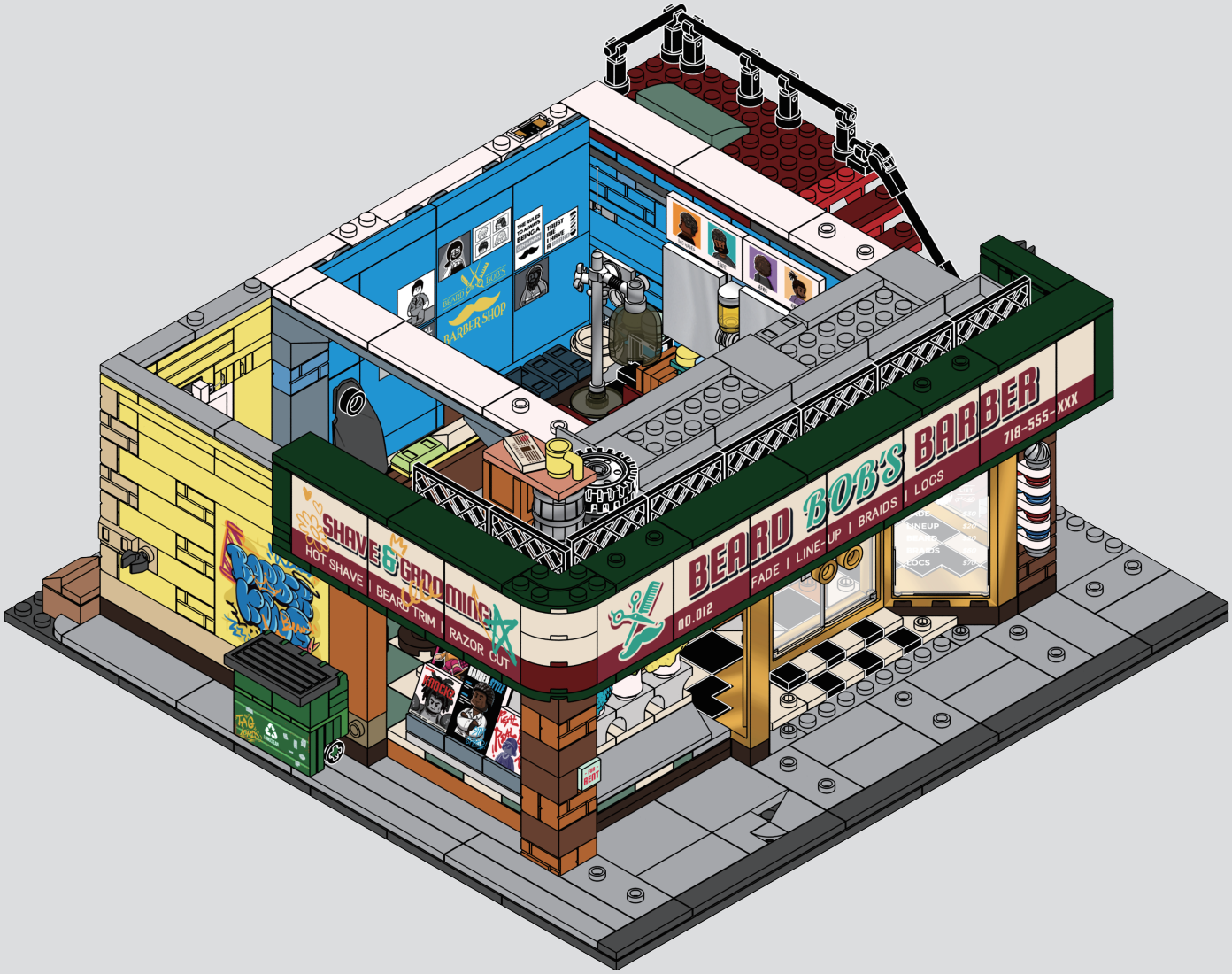
BEARD BOB'S BARBER
718-555-XXX
FADE | LINE-UP | BRAIDS | LOCS
NO.012
SHAVE & GROOMING
HOT SHAVE | BEARD TRIM | RAZOR CUT
BARBER SHOP

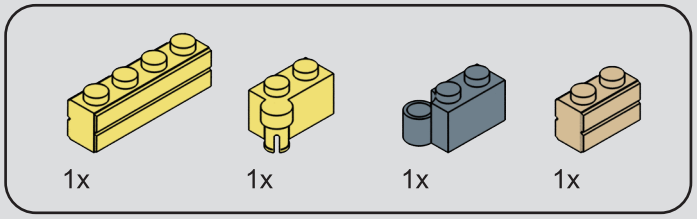
1x
1x
1x
1x

222

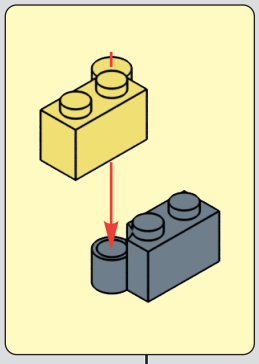

THE RULES TO ALWAYS BEING A GENTLEMAN
TRUST ME I HAVE A BEARD
BEARD & BOB'S
BARBER SHOP
REAL MEN GO TO BEARD & BOB'S BARBERS
FOR RENT

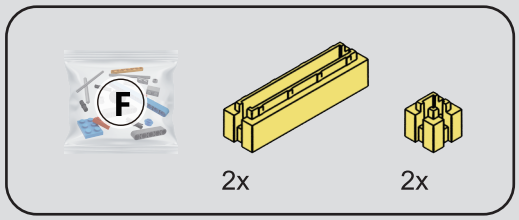

223



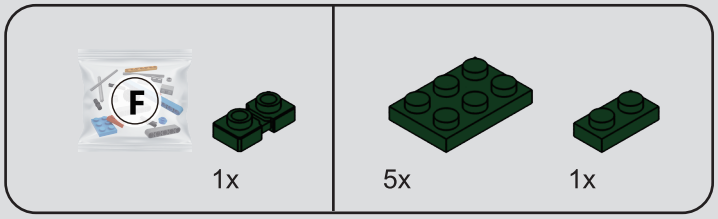
F
1x
5x
1x

224


THE RULES TO ALWAYS BEING A GENTLEMAN
TRUST ME I HAVE A BEARD
BEARD BOB'S
BARBER SHOP
REAL MEN GO TO REAL BARBERS
KNOCK!
BARBER STYLE
FOR RENT

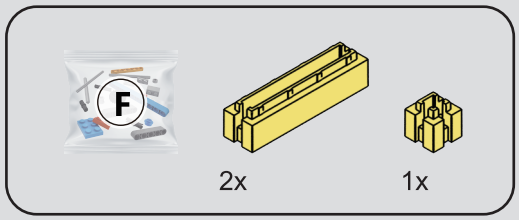

225



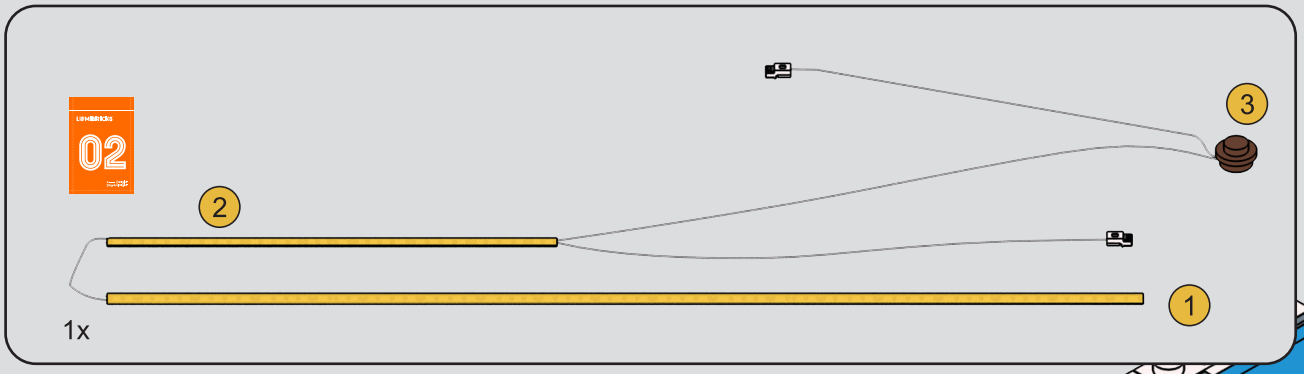
02
3
2
1
1x

226

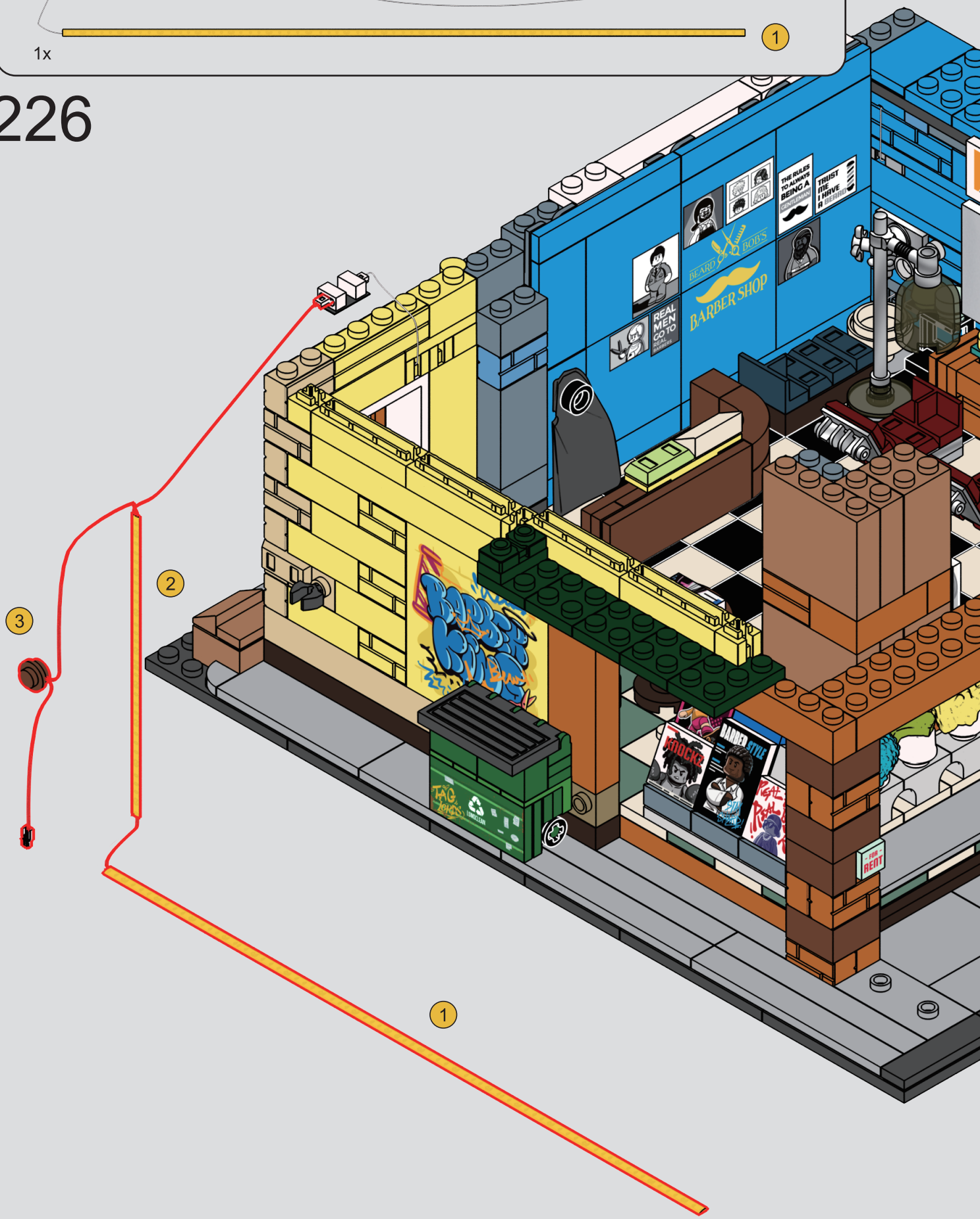
3
2
1
BEARD BOB'S
BARBER SHOP
REAL MEN GO TO REAL BARBERS
THE RULES TO ALWAYS BEING A
TRUST ME I HAVE A
KNOCKS
BARBER STYLE
FOR RENT

227

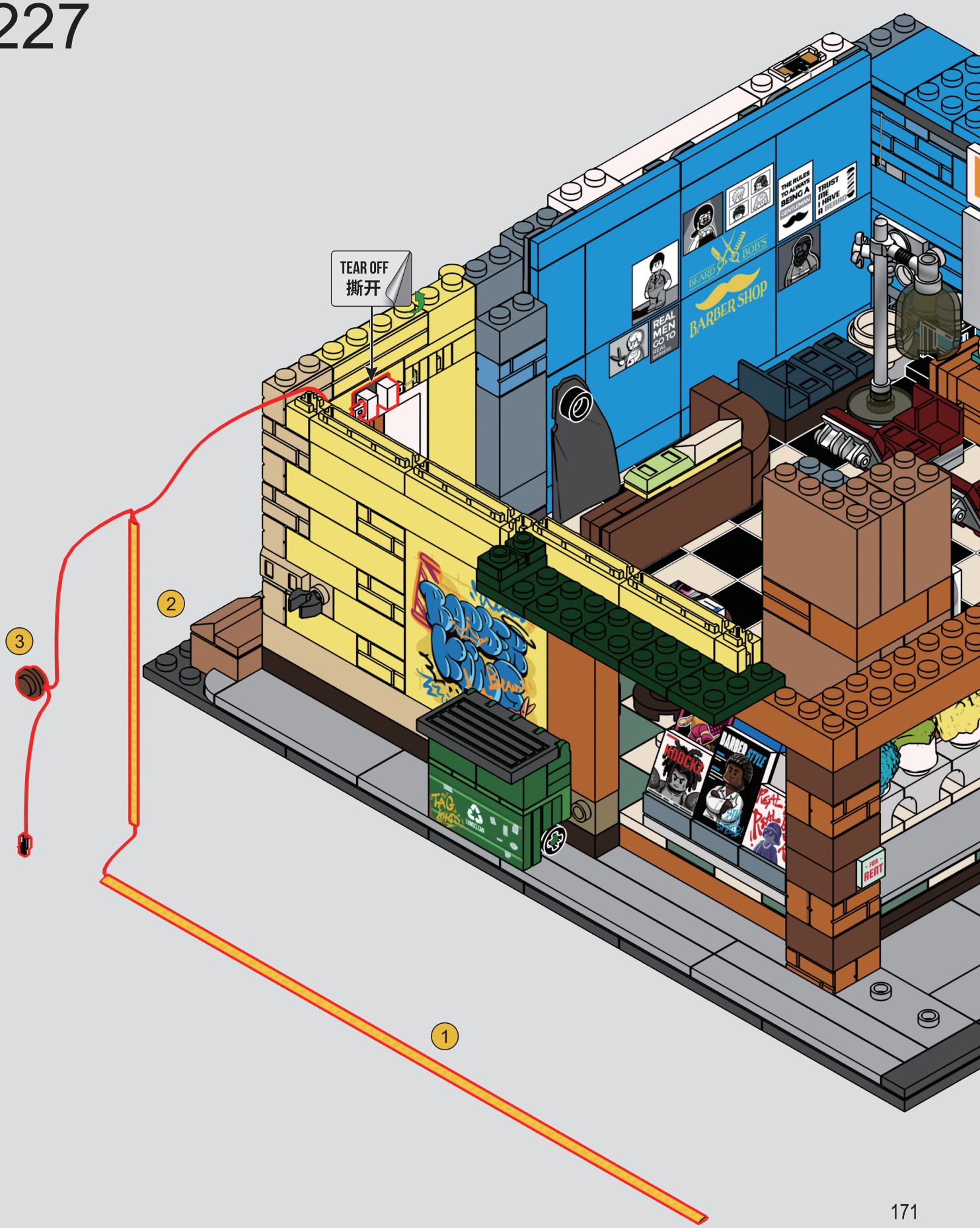
TEAR OFF
撕开
1
2
3
BEARD BOB'S
BARBER SHOP
REAL MEN GO TO
THE RULES TO ALWAYS BEING A
TRUST ME I HAVE A BEARD
FOR RENT

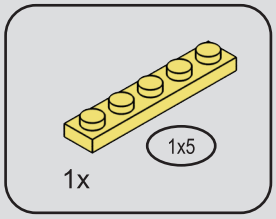

228

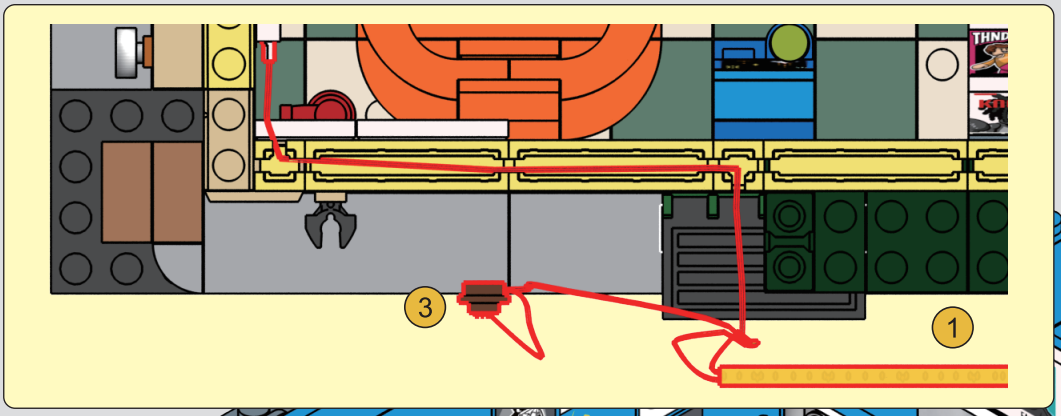

1

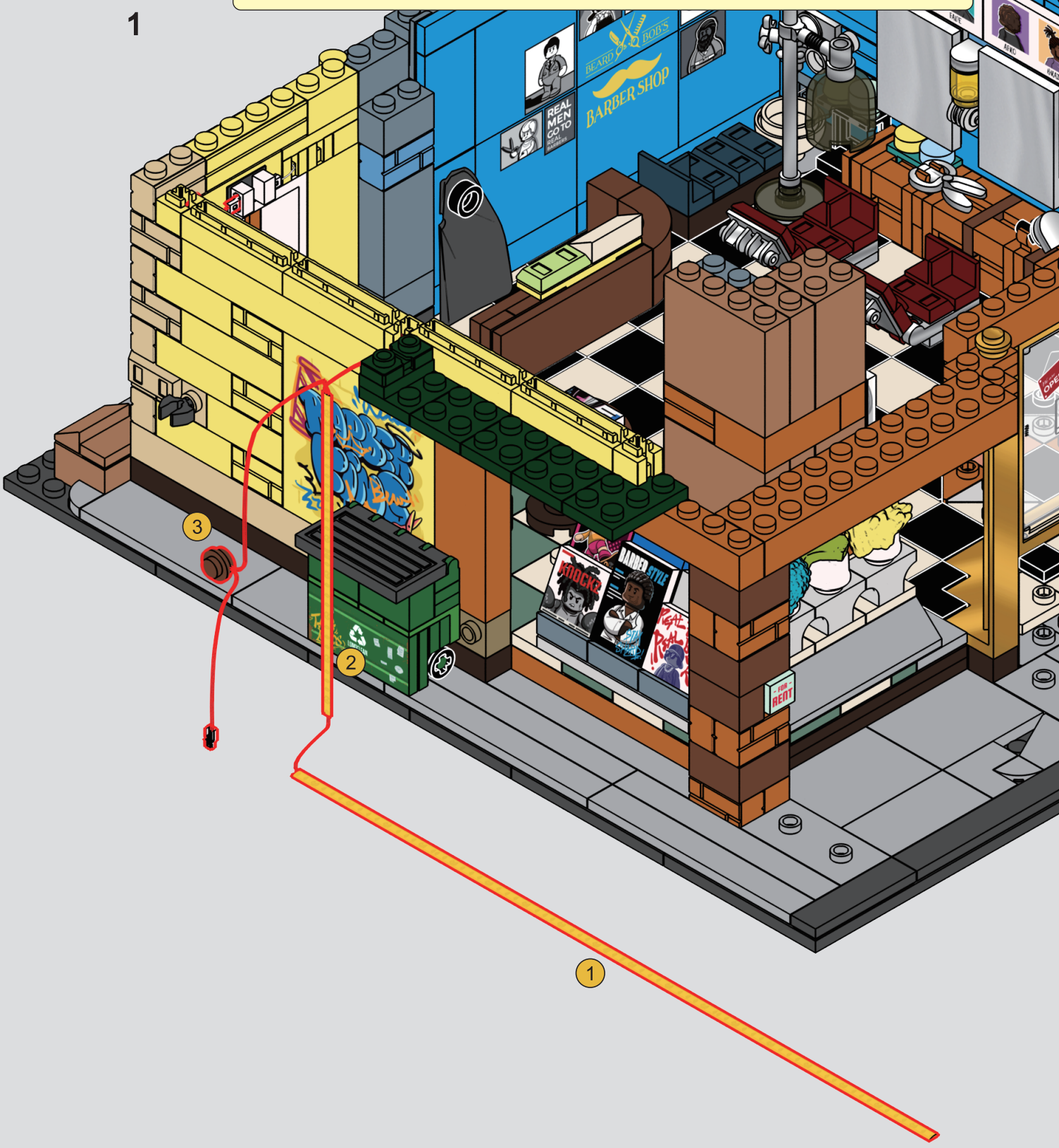


2
THE RULES TO ALWAYS BEING A GENTLEMAN
TRUST ME I HAVE A BEARD
BEARD & BOB'S
BARBER SHOP
REAL MEN GO TO
KNOCK!
FOR RENT

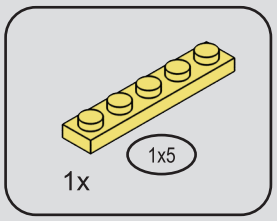
1x5
1x

229

1

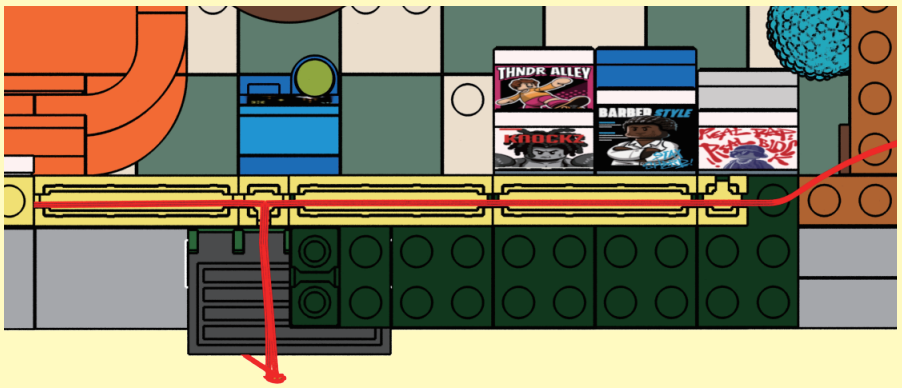
THNDR ALLEY
KNOCKS
BARBER STYLE

2
3
KNOCKS
BARBER STYLE
FOR RENT
BREADLOCS

2


BARBER SHOP
REAL MEN GO TO
KNOCKS
BARBER STYLE
BREADLOCS

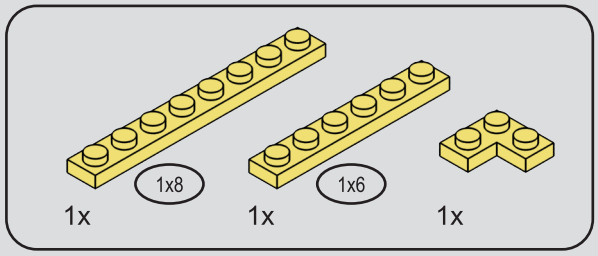

230


2x
1x5
231
1
3
3
2
BEARD & BOB'S
BARBER SHOP
REAL MEN GO TO REAL BARBERS
BREADLOSS
OPEN
KNOCKS
BARBER STYLE

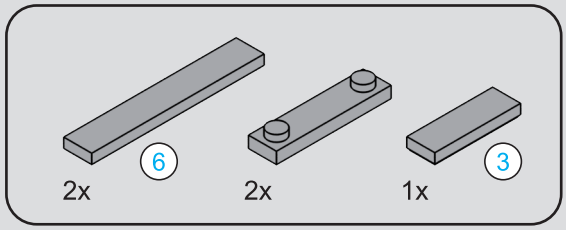
6
2x
2x
3
1x


6
1:1

232


3
6
6
BEARD & BOB'S
BARBER SHOP
REAL MEN GO TO BEAR BARBERS
THE RULES TO ALWAYS BEING A GENTLEMAN
TRUST ME I HAVE A BEARD
KNOCK
BARBER STYLE
FOR RENT

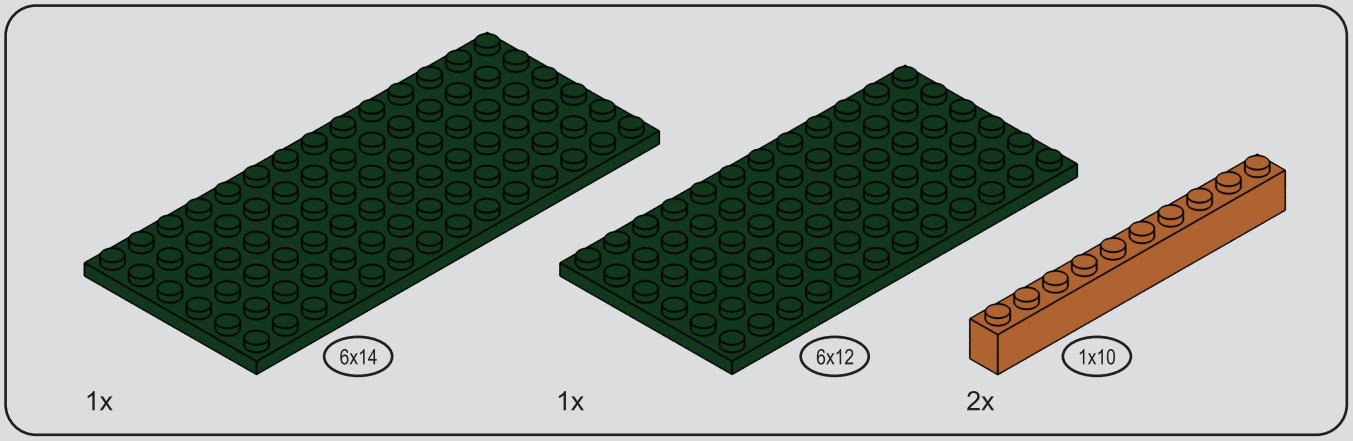

233

1

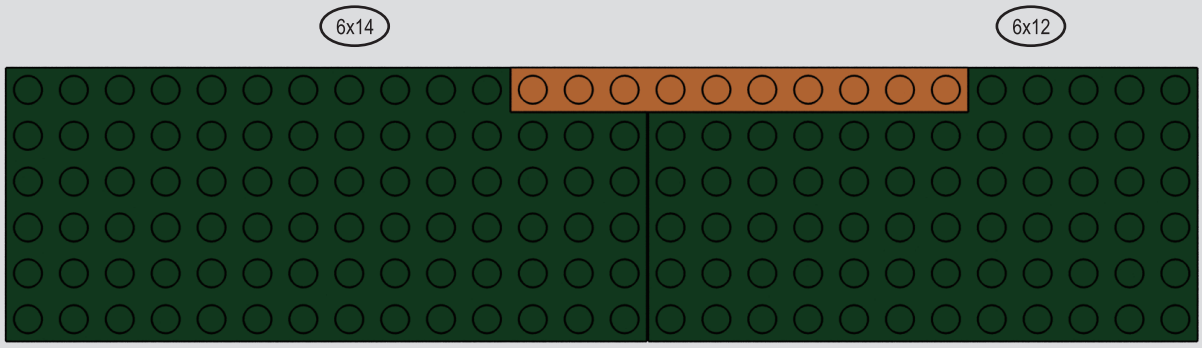

2

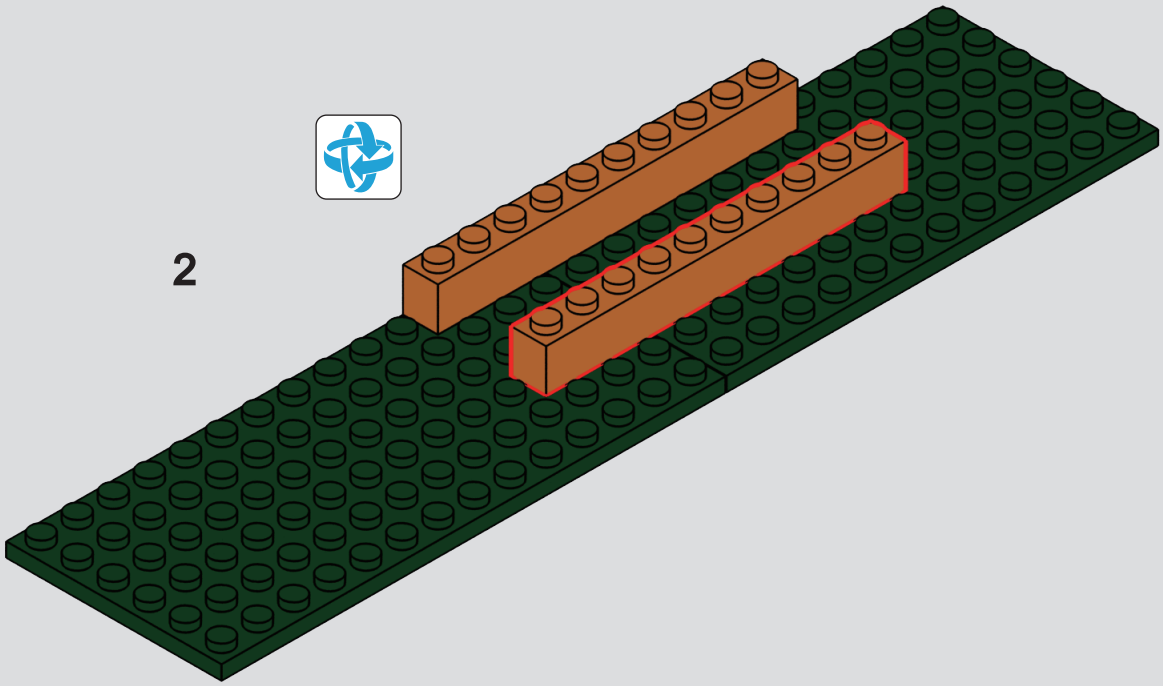

234



THE RULES TO ALWAYS BEING A GENTLEMAN
TRUST ME I HAVE A BEARD
BEARD BOB'S
BARBER SHOP
REAL MEN GO TO REAL BARBERS
3
PRICE
LIST
FADE
LINEUP
BEARD
BRAIDS
LOCS
$30
$20
$70
KNOCKS
BARBER STYLE
FOR RENT

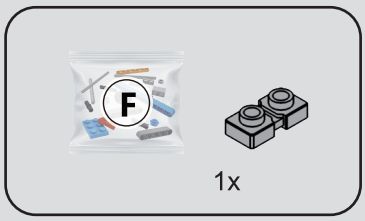

235

1

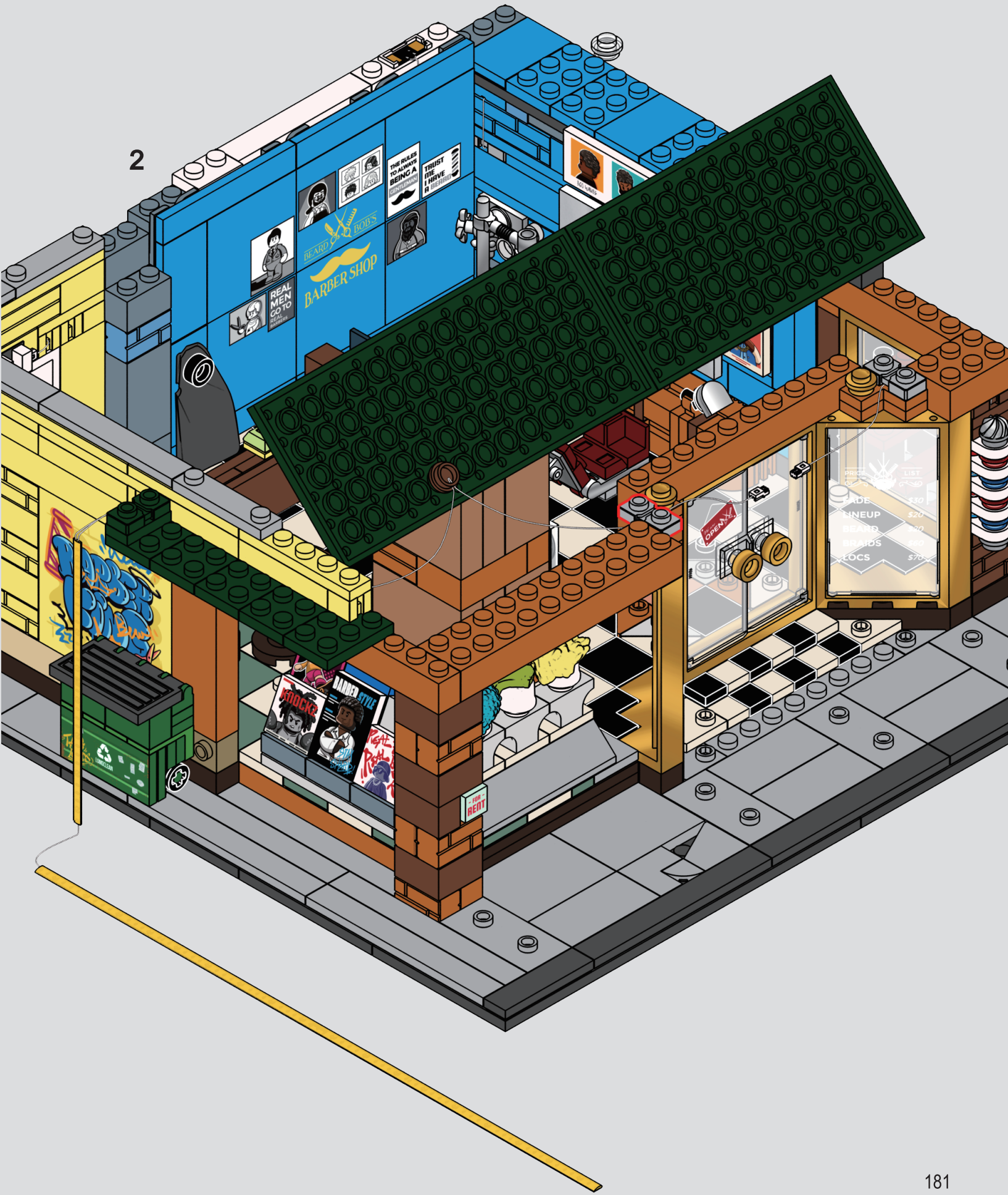
2
BEARD BOB'S
BARBER SHOP
REAL MEN GO TO
THE RULES TO ALWAYS BEING A
TRUST ME I HAVE A
OPEN
FOR RENT

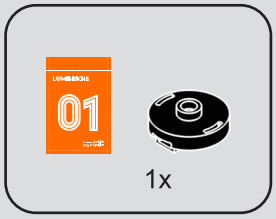
01
1x

236


BEARD & BOB'S
BARBER SHOP
REAL MEN GO TO
THE RULES TO ALWAYS BEING A
TRUST ME I HAVE A
OPEN
FOR RENT

237


REAL MEN GO TO
BEARD & BOB'S
BARBER SHOP
THE RULES TO ALWAYS BEING A
TRUST ME I HAVE A BEARD
FADE
LINEUP
BEARD
BRAIDS
LOCS
OPEN
FOR RENT

238


BEARD & BOB'S
BARBER SHOP
REAL MEN GO TO
THE RULES TO ALWAYS BEING A
TRUST ME I HAVE A BEARD
BREADLOCS
FADE
$30
LINEUP
$20
BEARD
$50
BRAIDS
$60
LOCS
$70
KNOCKS
BARBER STYLE
FOR RENT

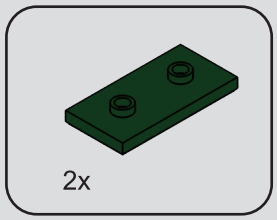
2x

239


REAL MEN GO TO BEAL BARBERS
THE RULES TO ALWAYS BEING A GENTLEMAN
TRUST ME I HAVE A BEARD
BEARD & BOB'S BARBER SHOP
DREADLOCS
LINEUP
BRAIDS
LOCS
KNOCKS
BARBER STYLE
FOR RENT

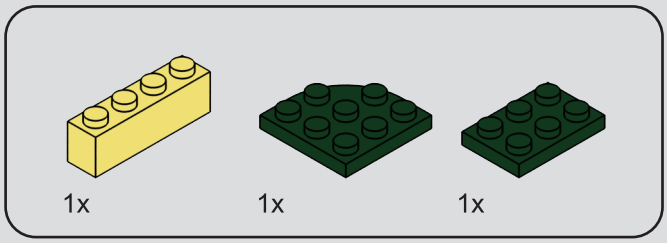
1x
1x
1x

240


REAL MEN GO TO REAL BARBERS
DREADLOCS
LINEUP
BEARD
BRAIDS
LOCS
FOR RENT

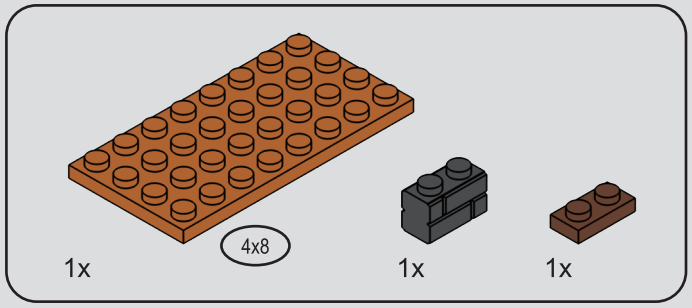

241

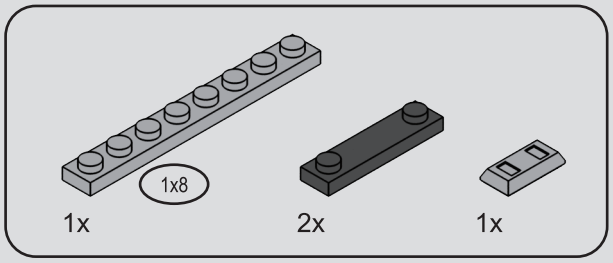
1x8
1x
2x
1x

242

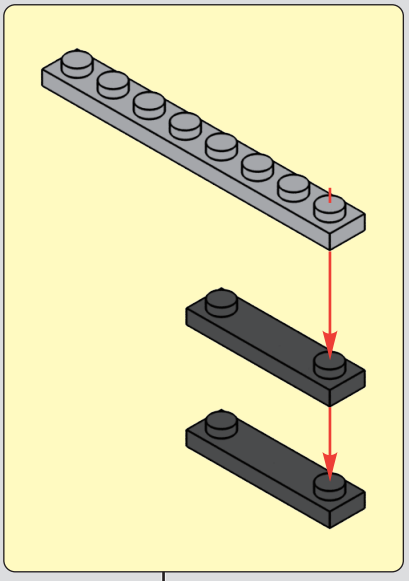

REAL MEN GO TO BARBERS
BEARD & BOB'S
BARBER SHOP
THE RULES TO ALWAYS BEING A GENTLEMAN
TRUST ME I HAVE A BEARD
DREADLOCS
LINEUP
BEARD
BRAIDS
LOCS
FOR RENT

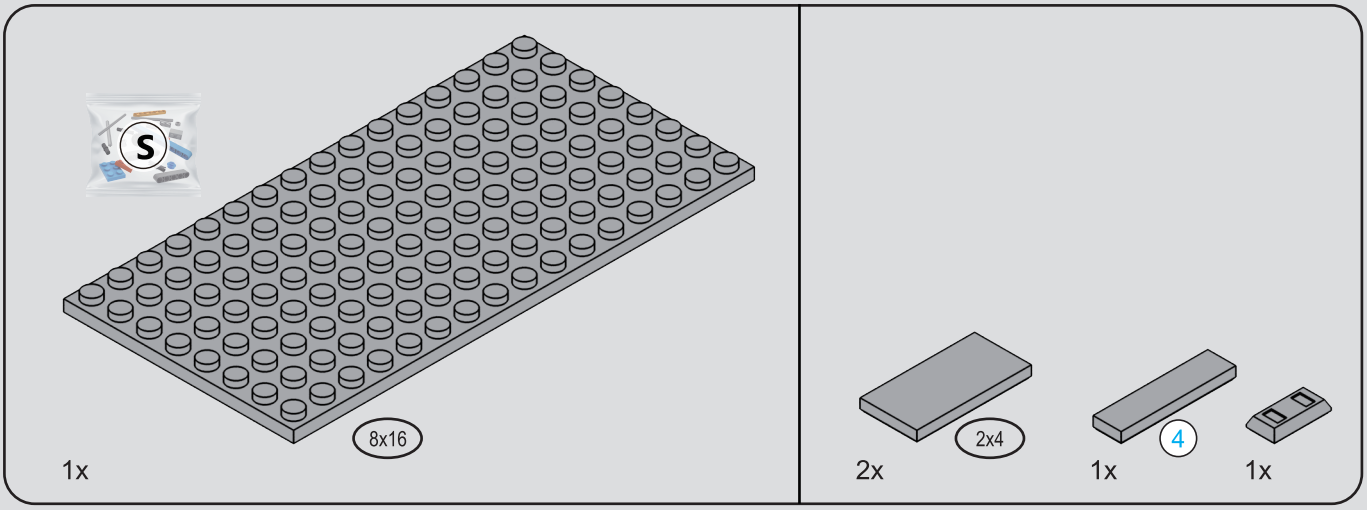

243

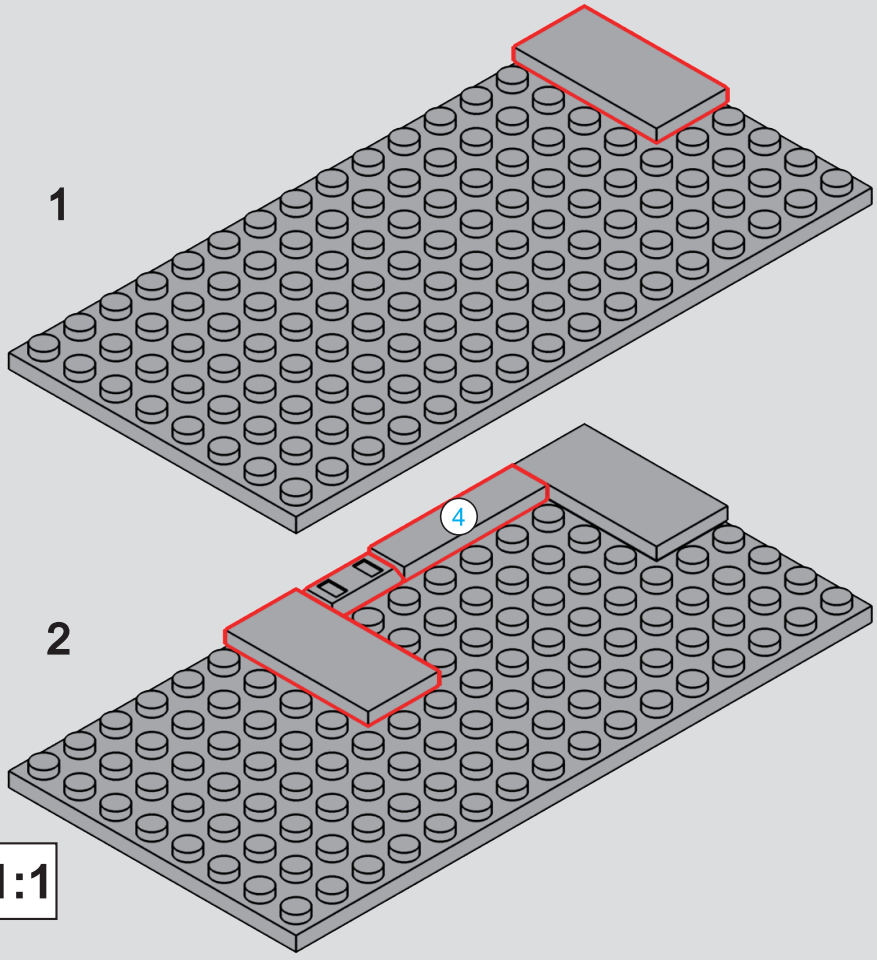



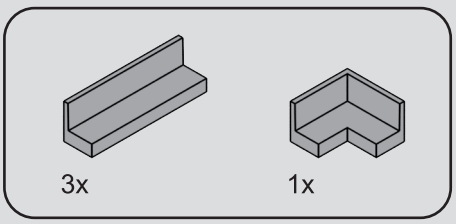

244

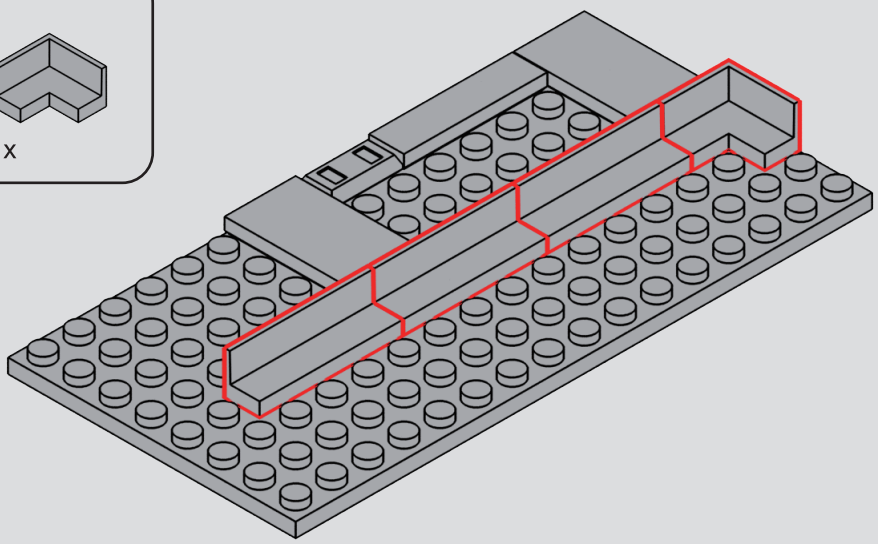

245

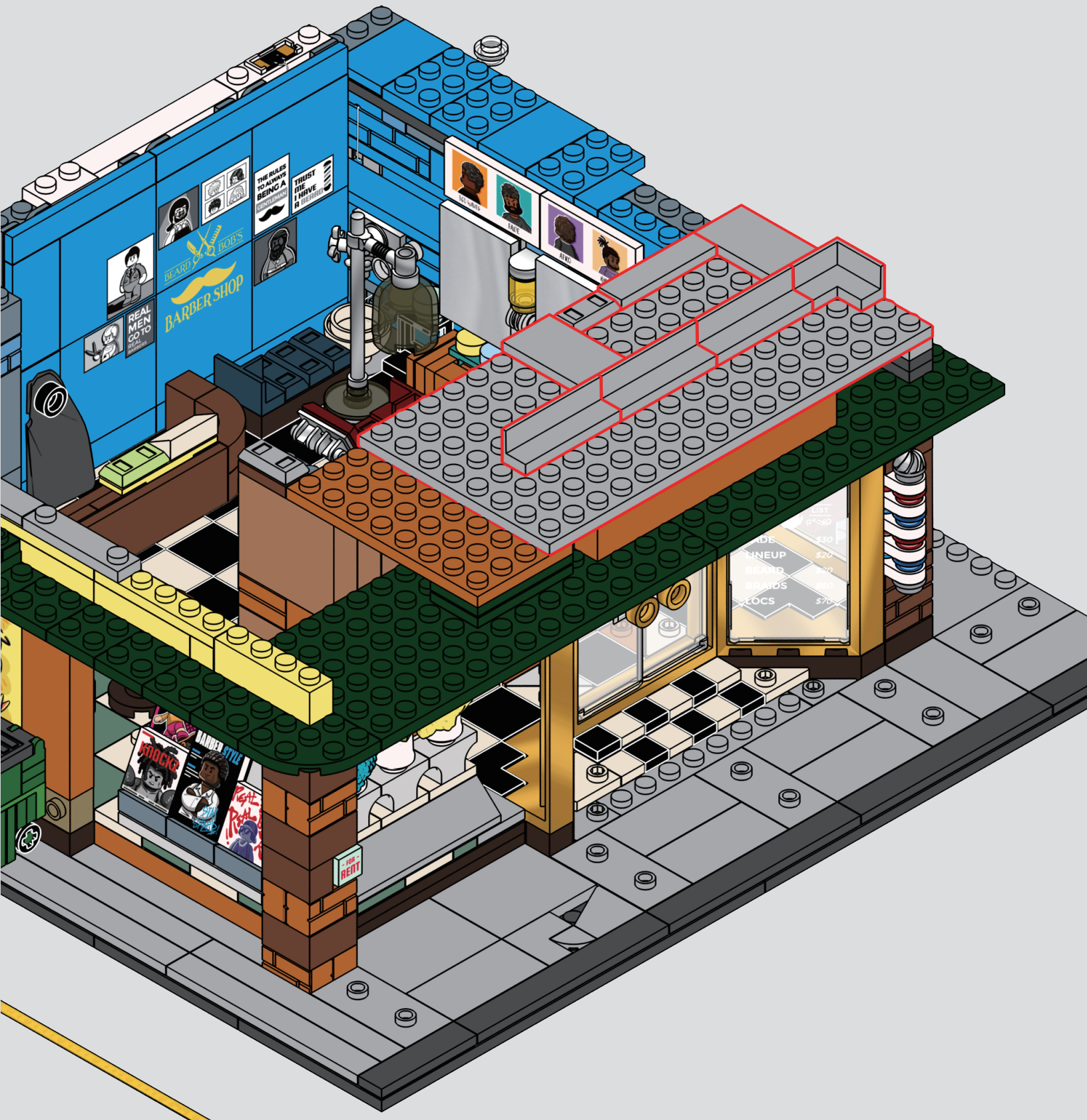
THE RULES TO ALWAYS BEING A GENTLEMAN
TRUST ME I HAVE A BEARD
BEARD BOB'S
BARBER SHOP
REAL MEN GO TO REAL BARBERS
FADE
AFRO
LINEUP
BEARD
BRAIDS
LOCS
KNOCK
BARBER STYLE
FOR RENT

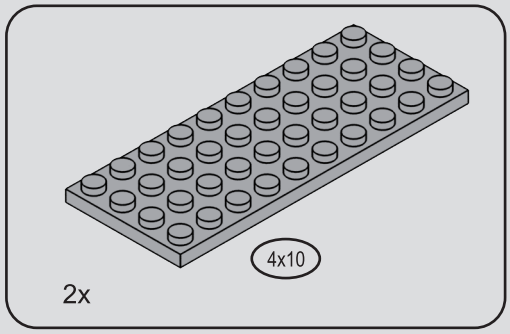

246

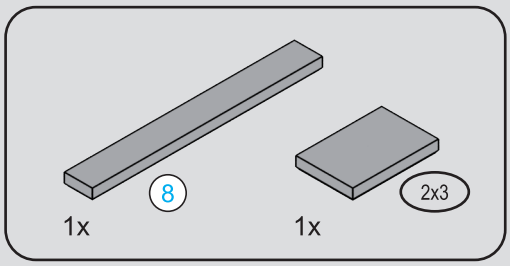
8
1x
2x3
1x


8
1:1

247


THE RULES TO ALWAYS BEING A GENTLEMAN
TRUST ME I HAVE A BEARD
BEARD BOB'S
BARBER SHOP
REAL MEN GO TO REAL BARBERS
8
LINEUP
BEARD
BRAIDS
LOCS
BARBER STYLE
FOR RENT

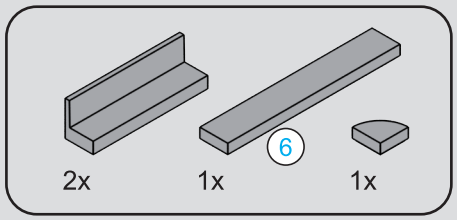
2x
1x
6
1x


6
1:1

248

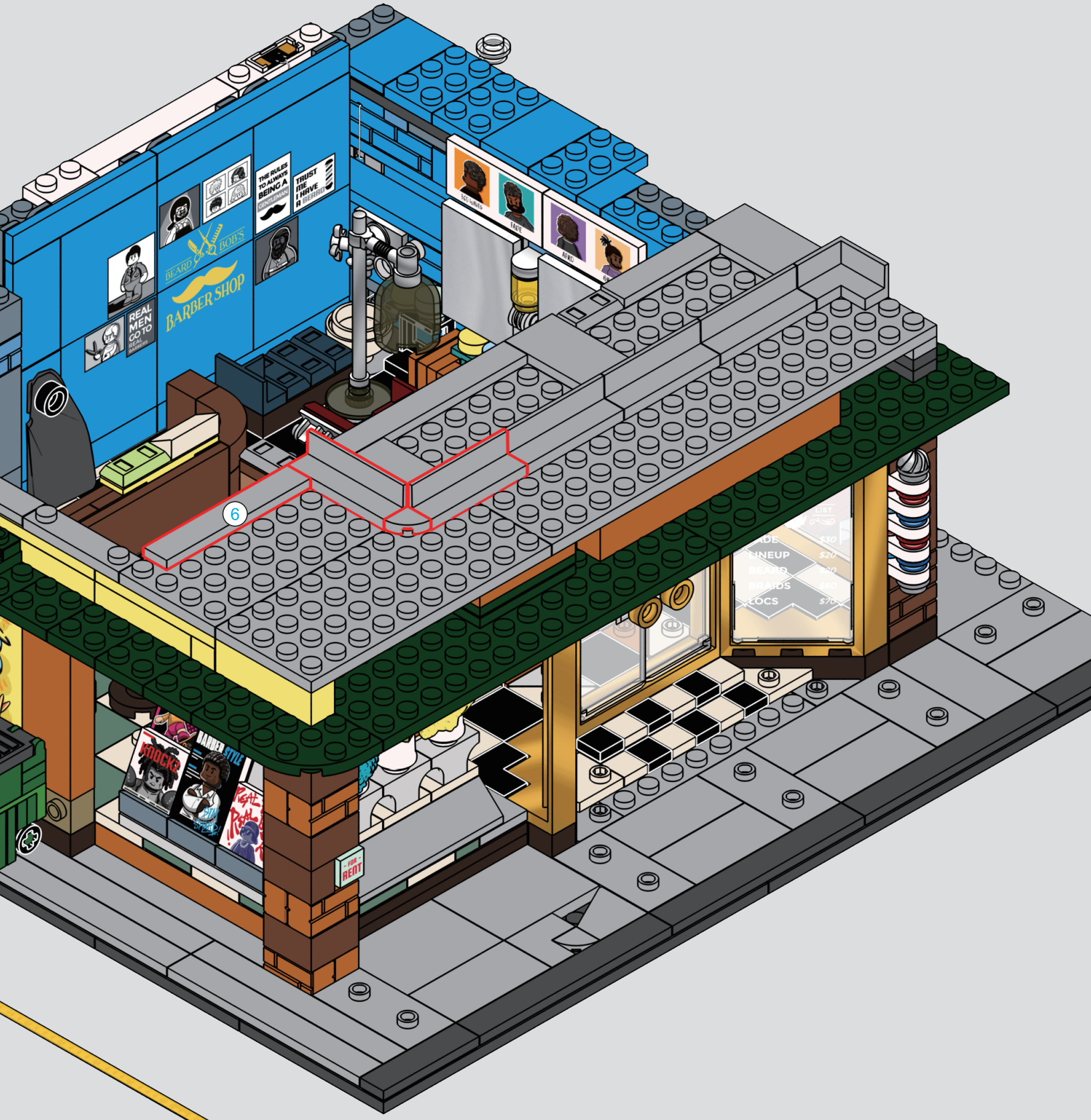
THE RULES TO ALWAYS BEING A GENTLEMAN
TRUST ME I HAVE A BEARD
BEARD BOB'S
BARBER SHOP
REAL MEN GO TO REAL BARBERS
6
LINEUP
BEARD
BRAIDS
LOCS
KNOCKS
BARBER STYLE
FOR RENT

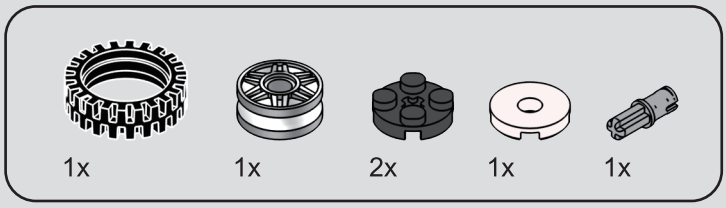

249



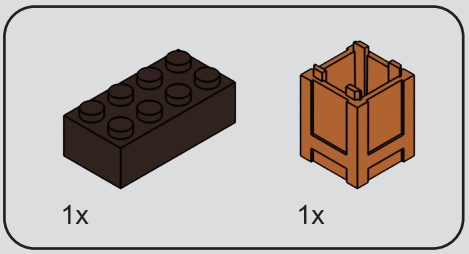

250

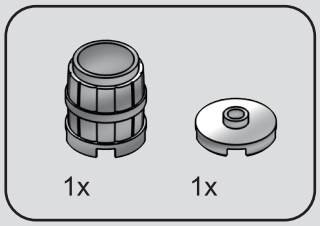

251

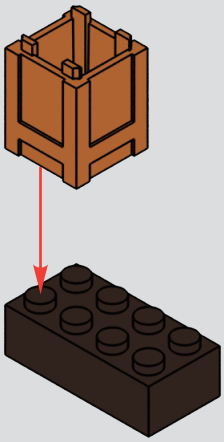

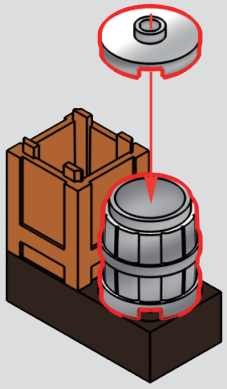

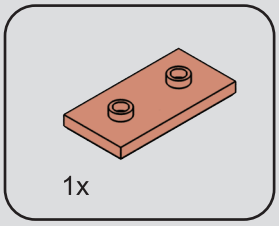

252

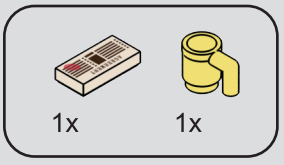

253

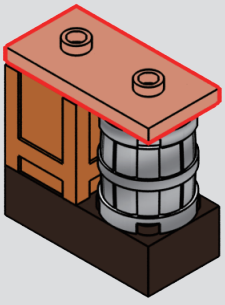

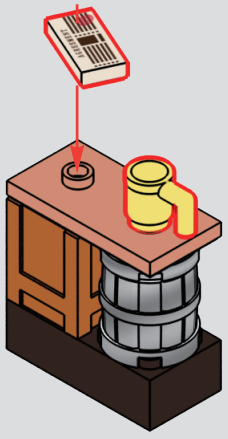

254

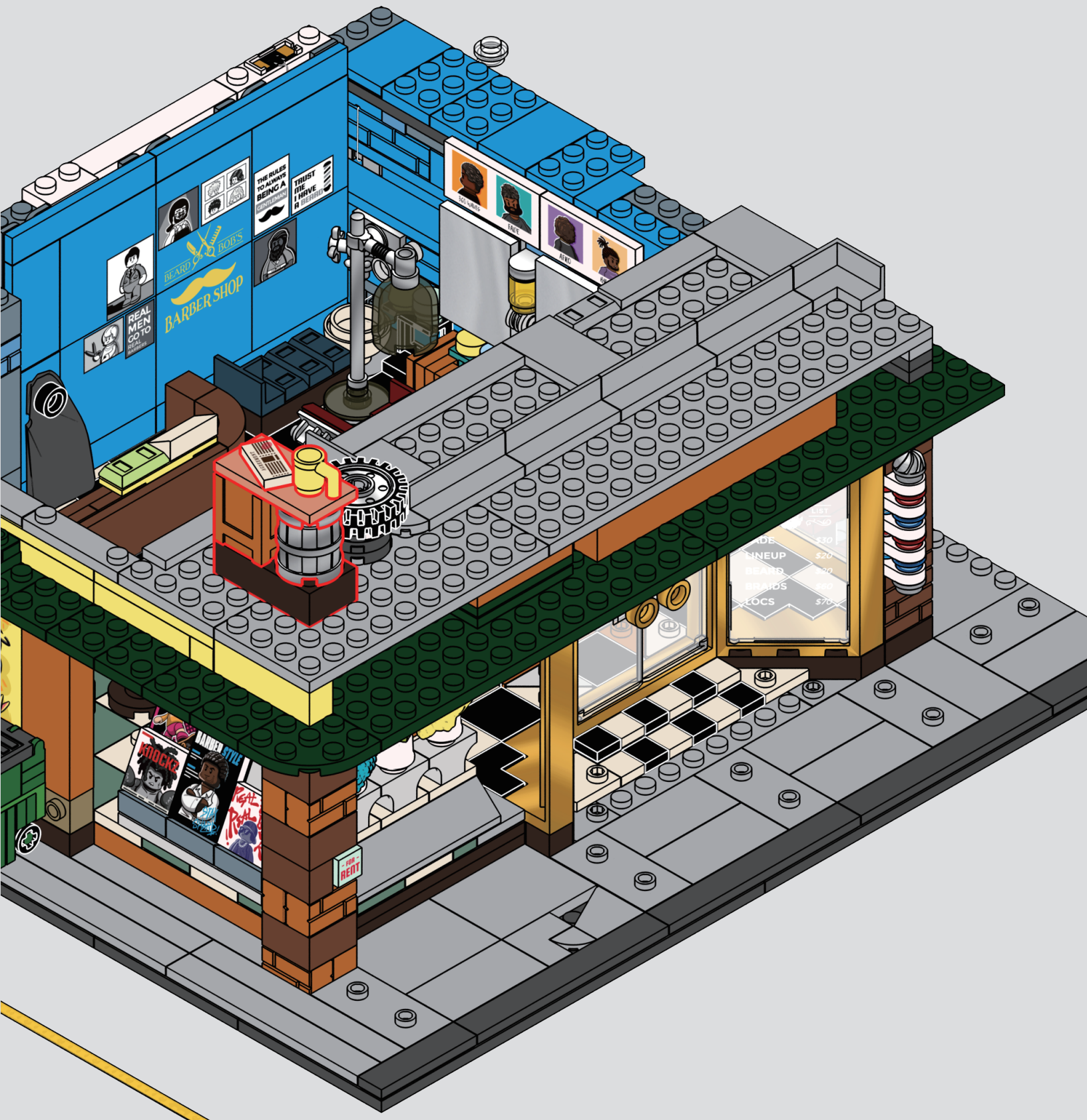
THE RULES TO ALWAYS BEING A GENTLEMAN
TRUST ME I HAVE A BEARD
BEARD BOB'S
BARBER SHOP
REAL MEN GO TO REAL BARBERS
FADE
AFRO
LINEUP
BEARD
BRAIDS
LOCS
$30
$20
$70
KNOCK!
BARBER STYLE
FOR RENT

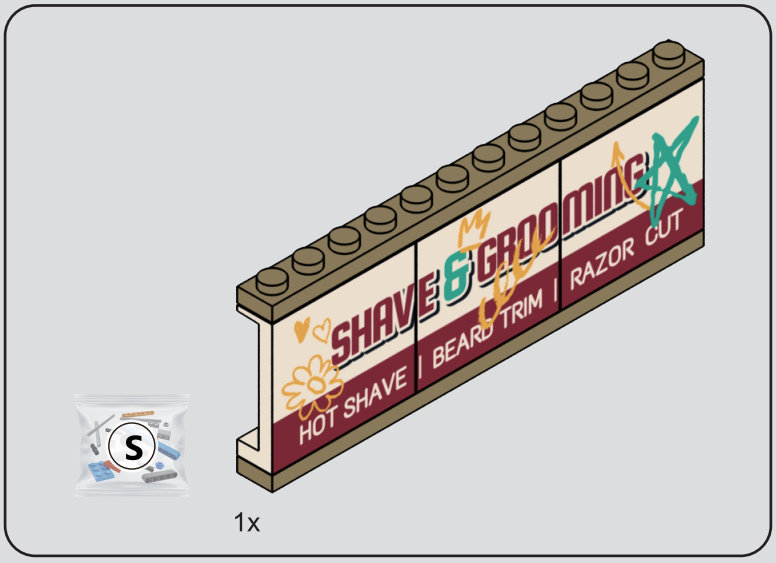
S
SHAVE & GROOMING
HOT SHAVE
BEARD TRIM
RAZOR CUT
1x

255

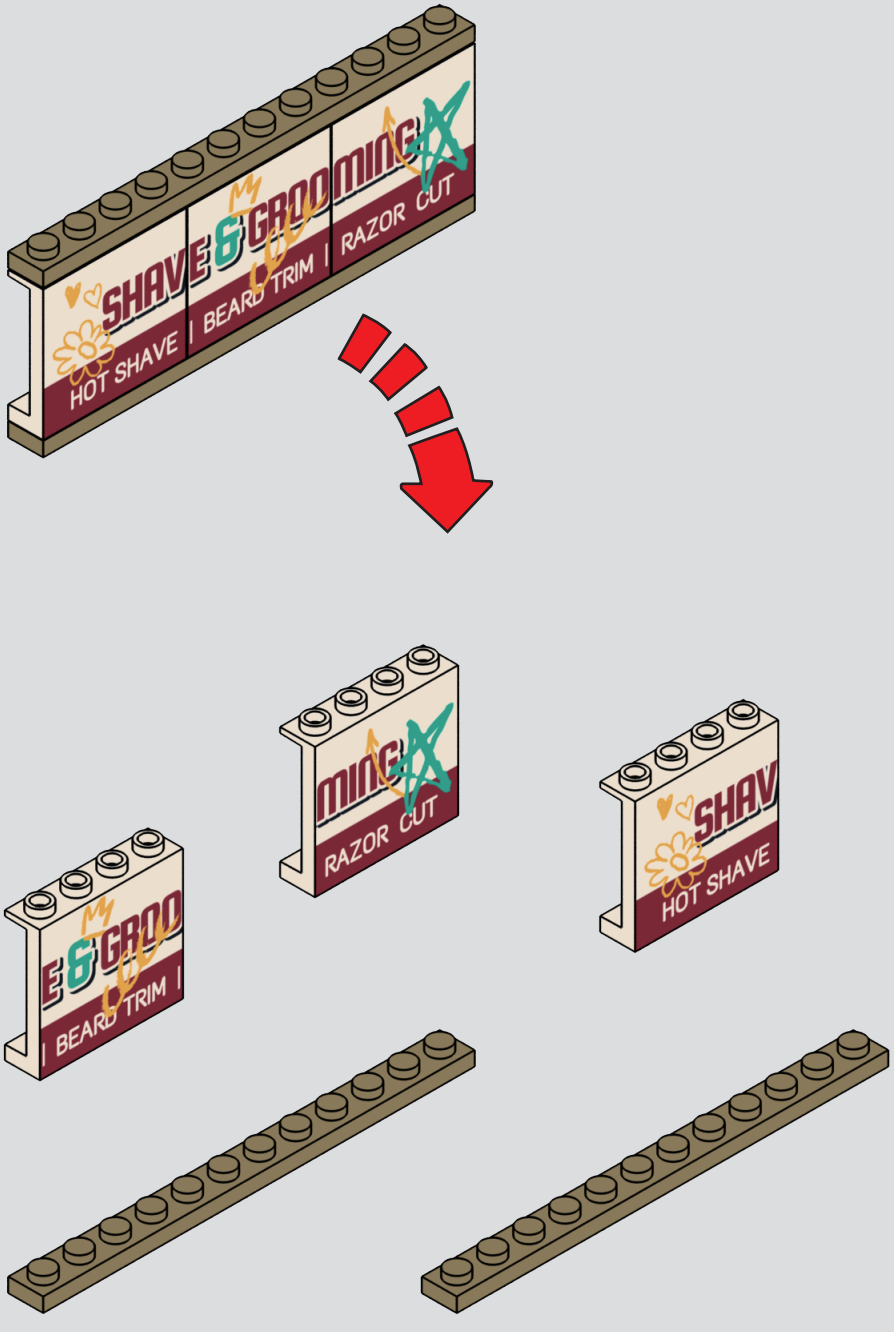
SHAVE & GROOMING
HOT SHAVE
BEARD TRIM
RAZOR CUT

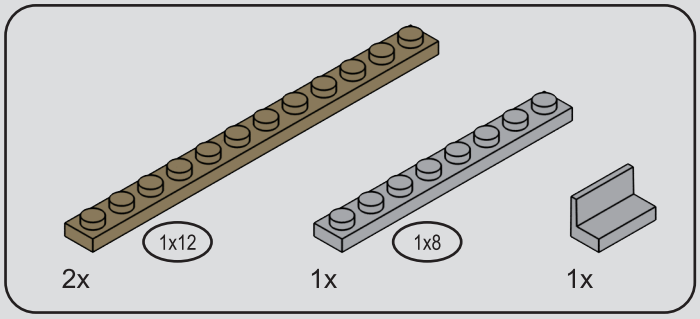

256

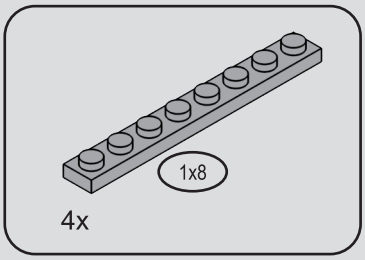
1x8
4x

257

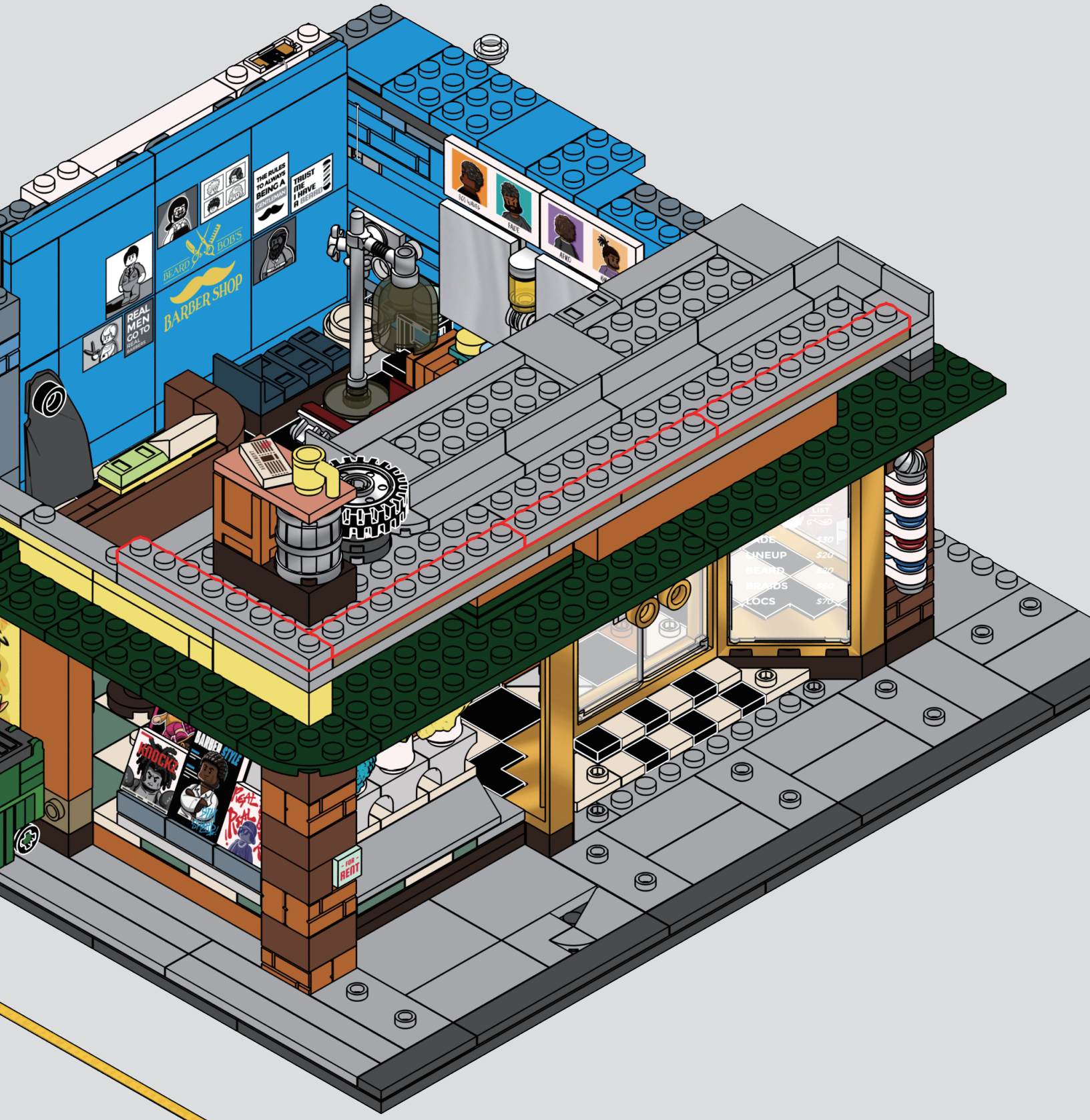
BEARD & BOB'S
BARBER SHOP
REAL MEN GO TO BARBER SHOPS
THE RULES TO ALWAYS BEING A GENTLEMAN
TRUST ME I HAVE A BEARD
FADE
AFRO
KNOCKS
BARBER STYLE
FOR RENT

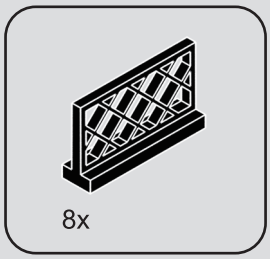
8x

258

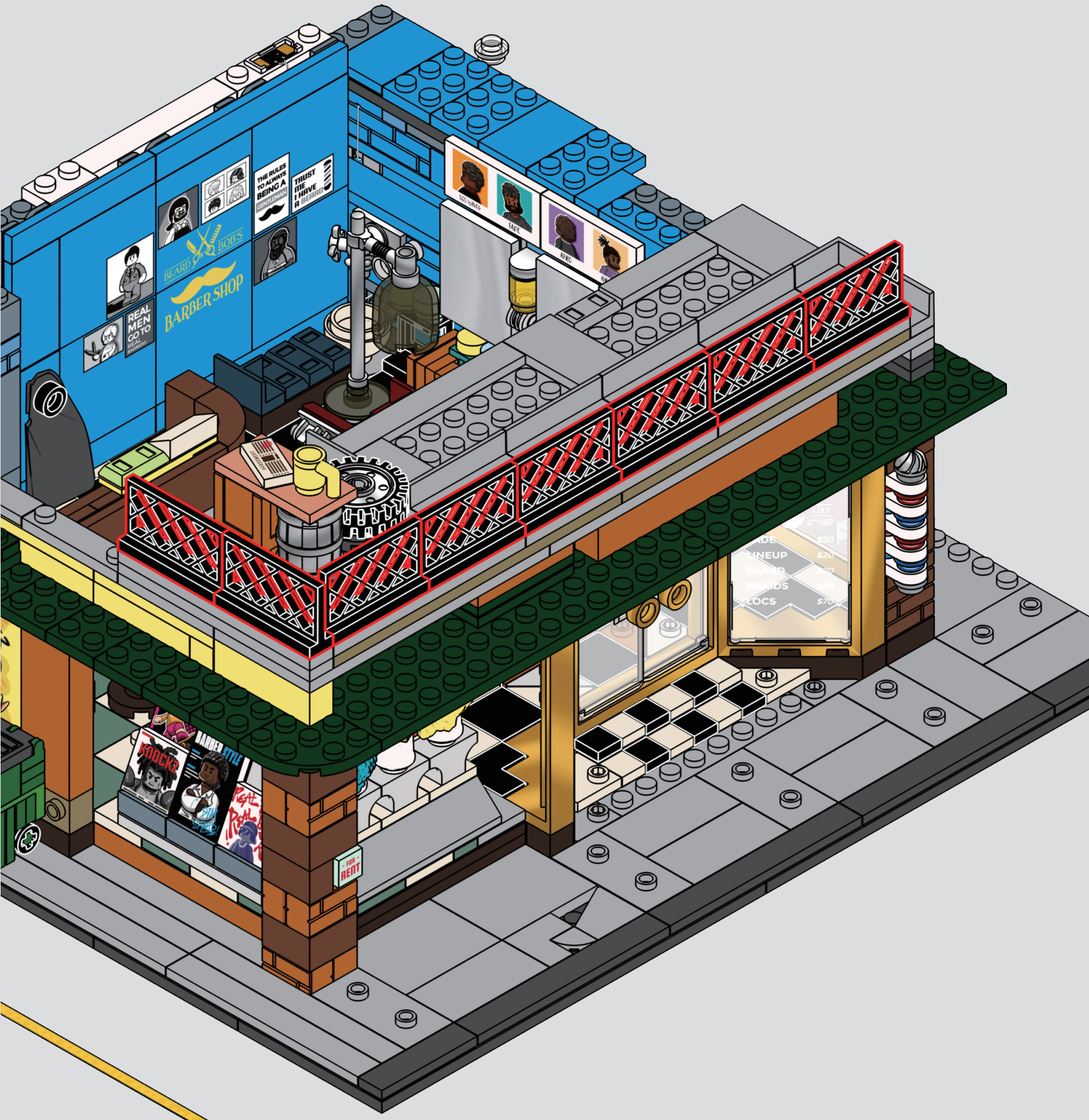
BEARD & BOB'S
BARBER SHOP
REAL MEN GO TO
THE RULES TO ALWAYS BEING A
TRUST ME I HAVE A BEARD
FOR RENT

259



THE RULES TO ALWAYS BEING A GENTLEMAN
TRUST ME I HAVE A BEARD
BEARD BOB'S
BARBER SHOP
REAL MEN GO TO REAL BARBERS
360 WAVES
FADE
AFRO
LINEUP
BEARD
BRAIDS
LOCS
$30
$20
$60
$70
KNOCK
BARBER STYLE
FOR RENT
2
1

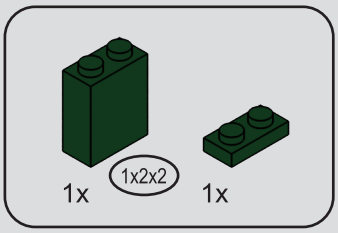
1x
1x2x2
1x

260

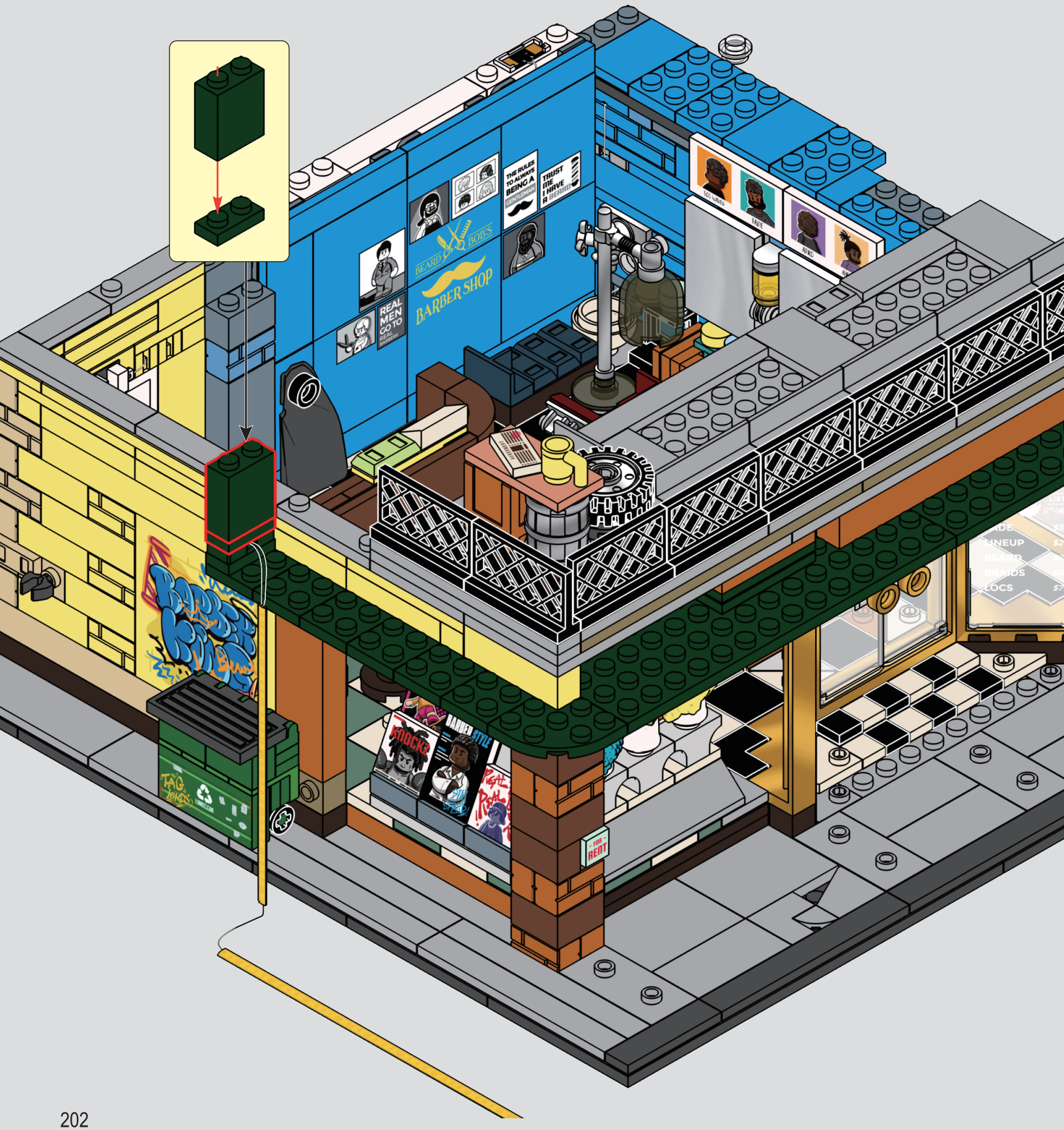
BEARD & BOB'S
BARBER SHOP
REAL MEN GO TO
THE RULES TO ALWAYS BEING A
TRUST ME I HAVE A
KNOCK
BARBER STYLE
FOR RENT

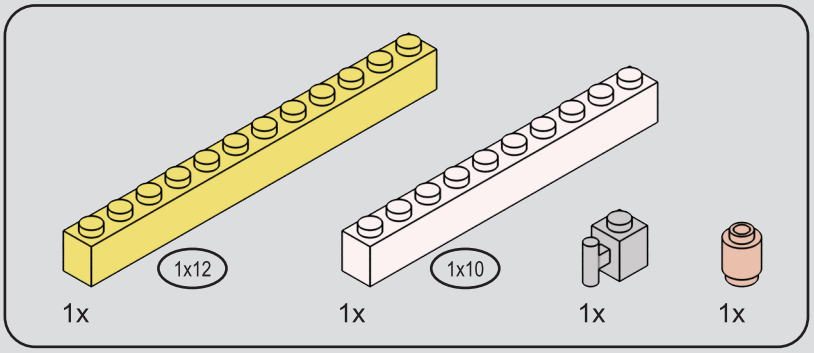

261

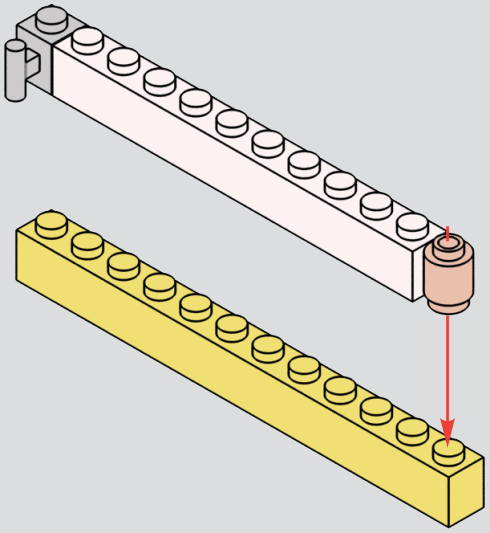

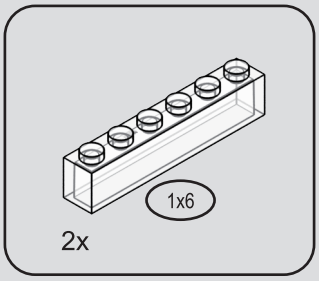

262

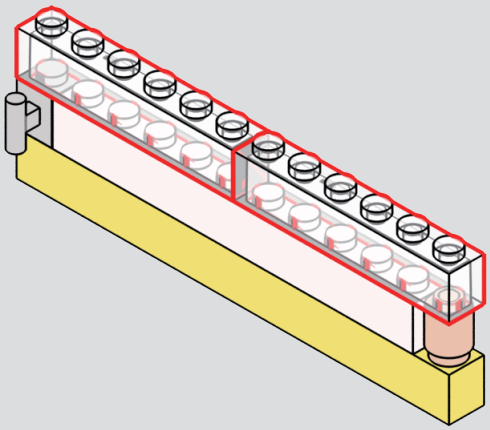

263

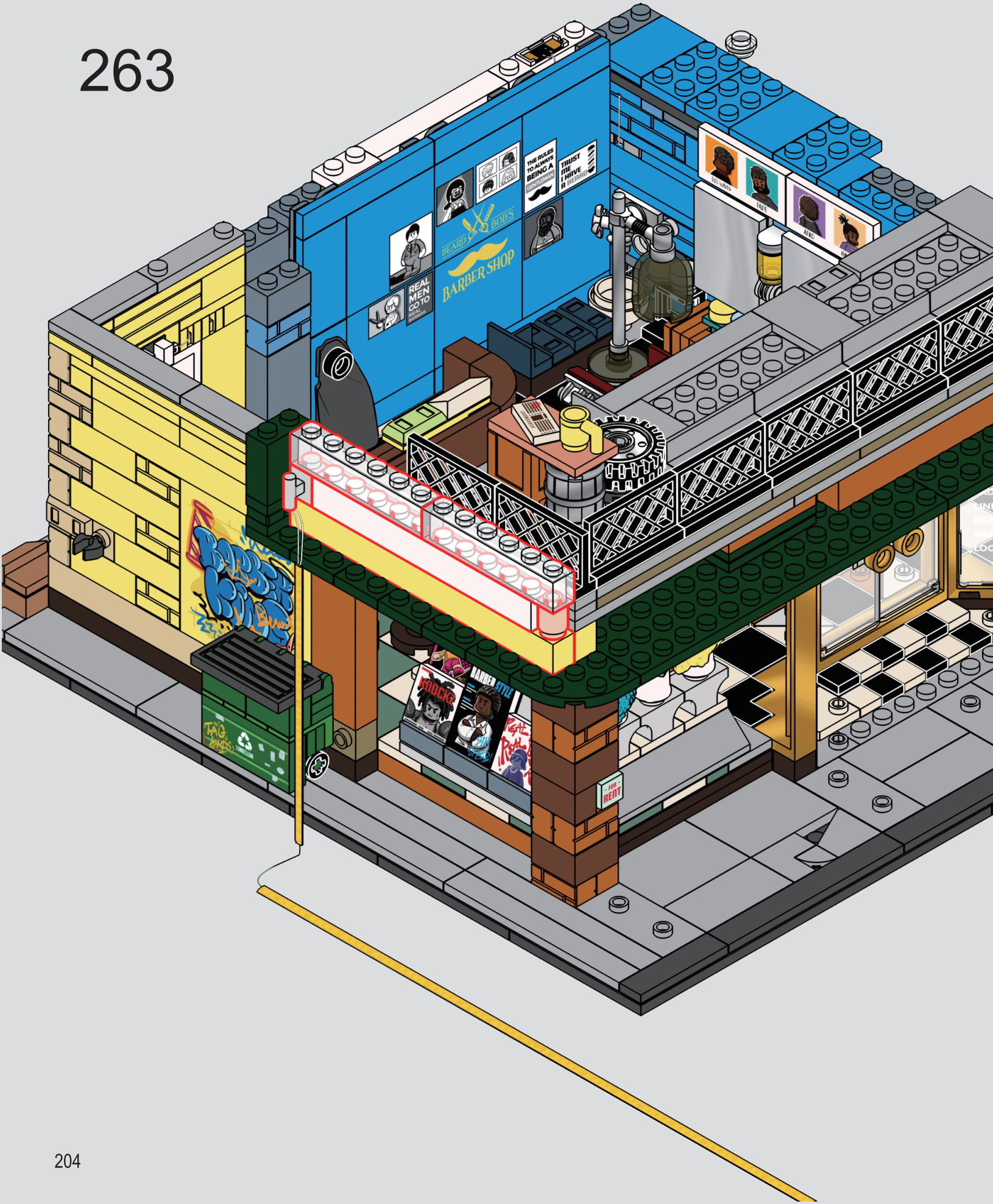
THE RULES TO ALWAYS BEING A GENTLEMAN
TRUST ME I HAVE A BEARD
BEARD & BOB'S
BARBER SHOP
REAL MEN GO TO BARBER SHOPS
KNOCK
BARBER STYLE
FOR RENT

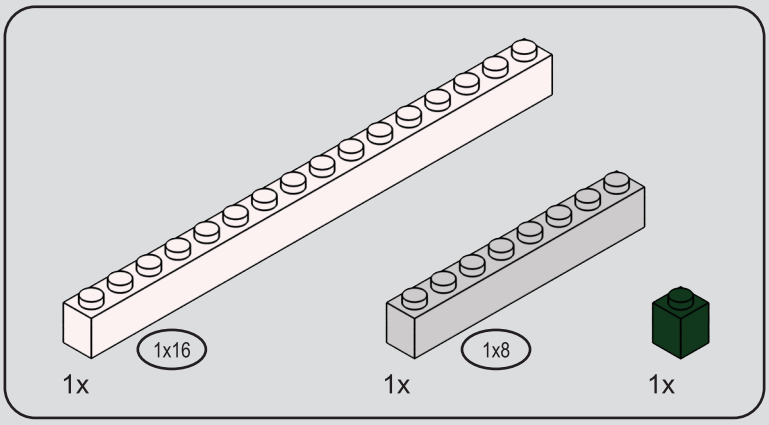

264

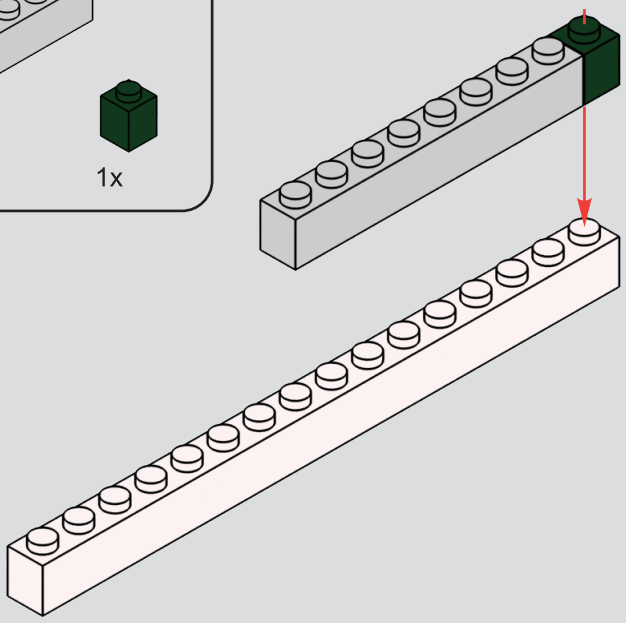

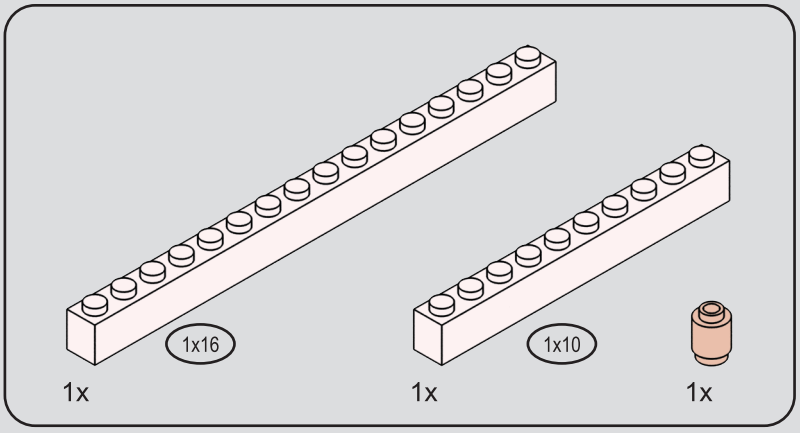

265

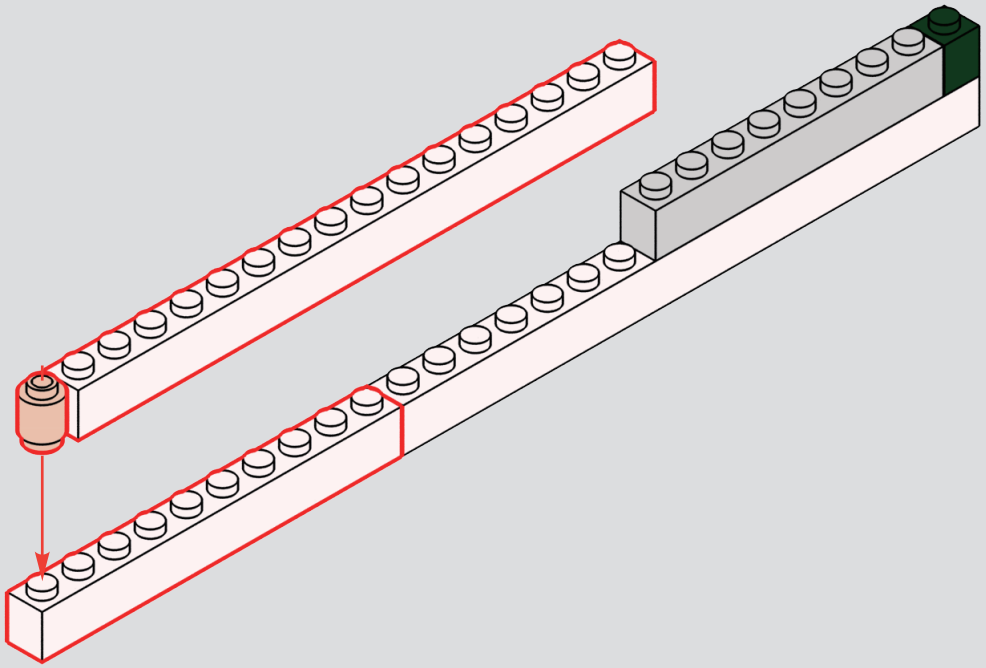

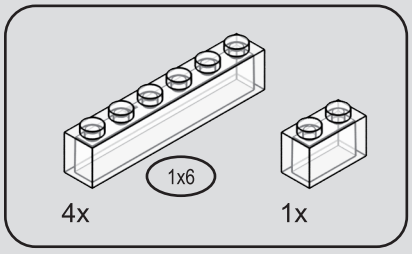

266

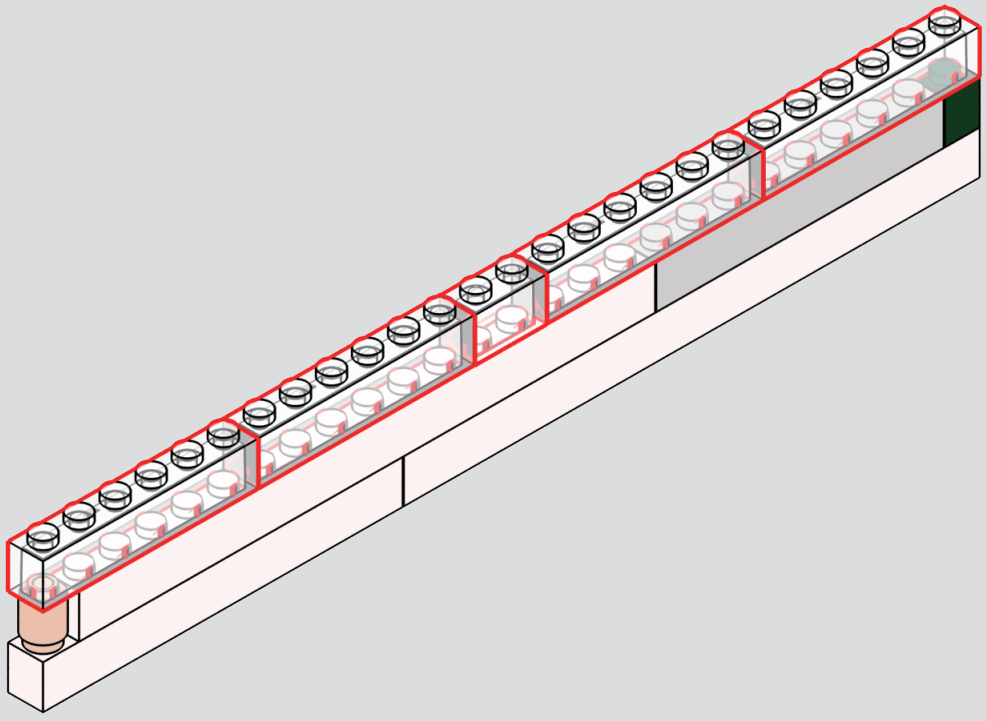

267


THE RULES TO ALWAYS BEING A GENTLEMAN
TRUST ME I HAVE A BEARD
BEARD BOB'S
BARBER SHOP
REAL MEN GO TO REAL BARBERS
FADE
AFRO
LINEUP
BEARD
BRAIDS
LOCS
$30
$20
$70
BARBER STYLE
FOR RENT

268



269

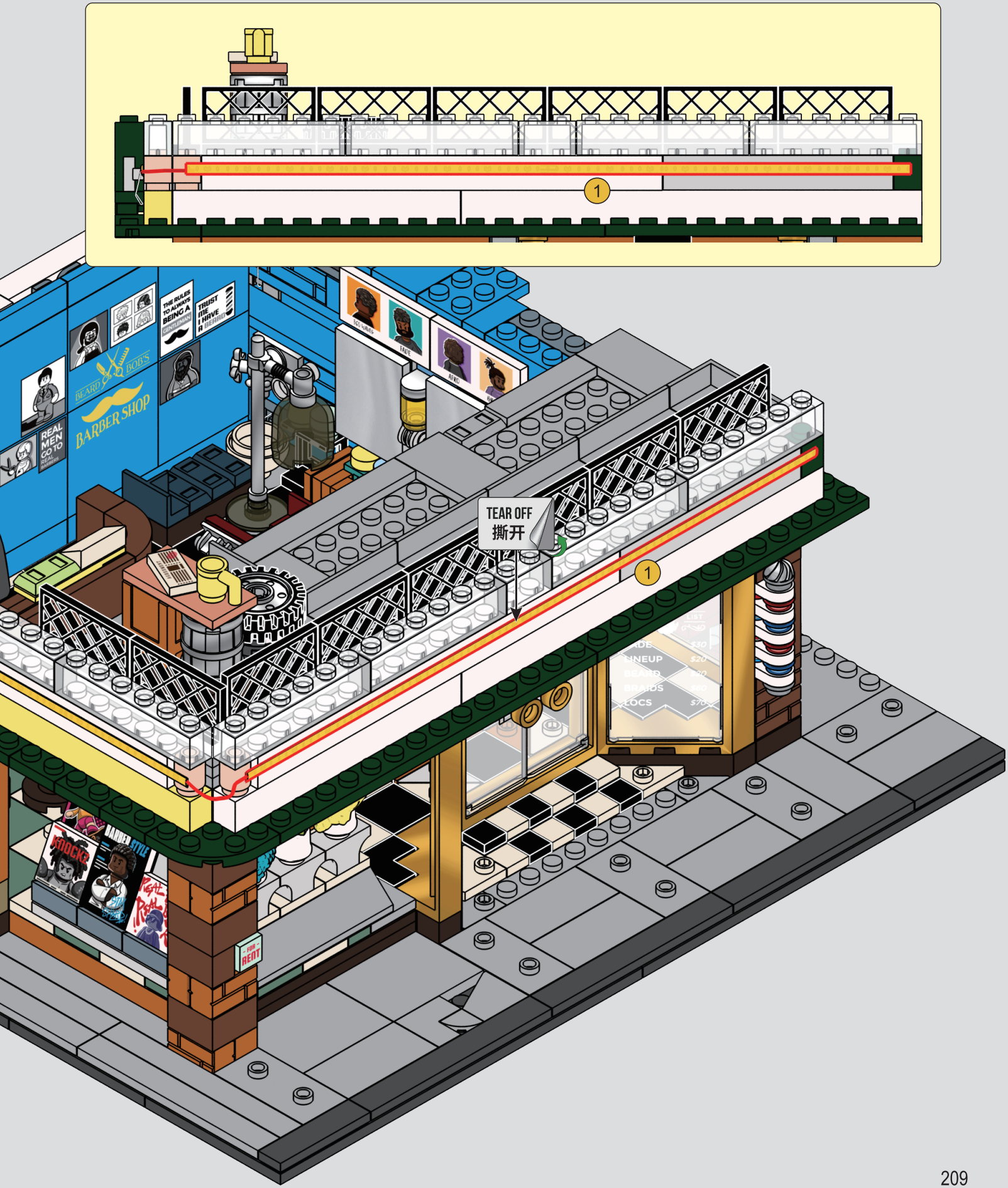
1
TEAR OFF
撕开
1
BARBER SHOP
BEARD BOB'S
REAL MEN GO TO
THE RULES TO ALWAYS BEING A GENTLEMAN
TRUST ME I HAVE A BEARD
FADE
AFRO
LINEUP
BEARD
BRAIDS
LOCS
$30
$20
$70
KNOCKS
BARBER STYLE
FOR RENT

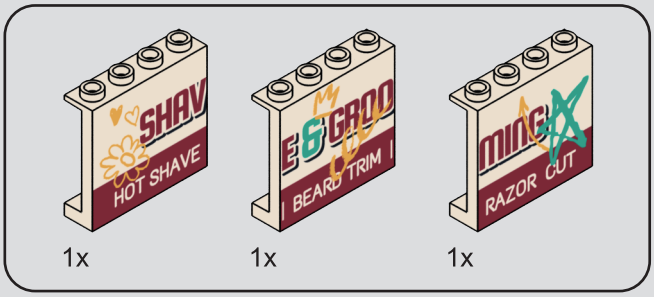
SHAV
HOT SHAVE
E & GROO
BEARD TRIM
MING
RAZOR CUT

1x 1x 1x

270

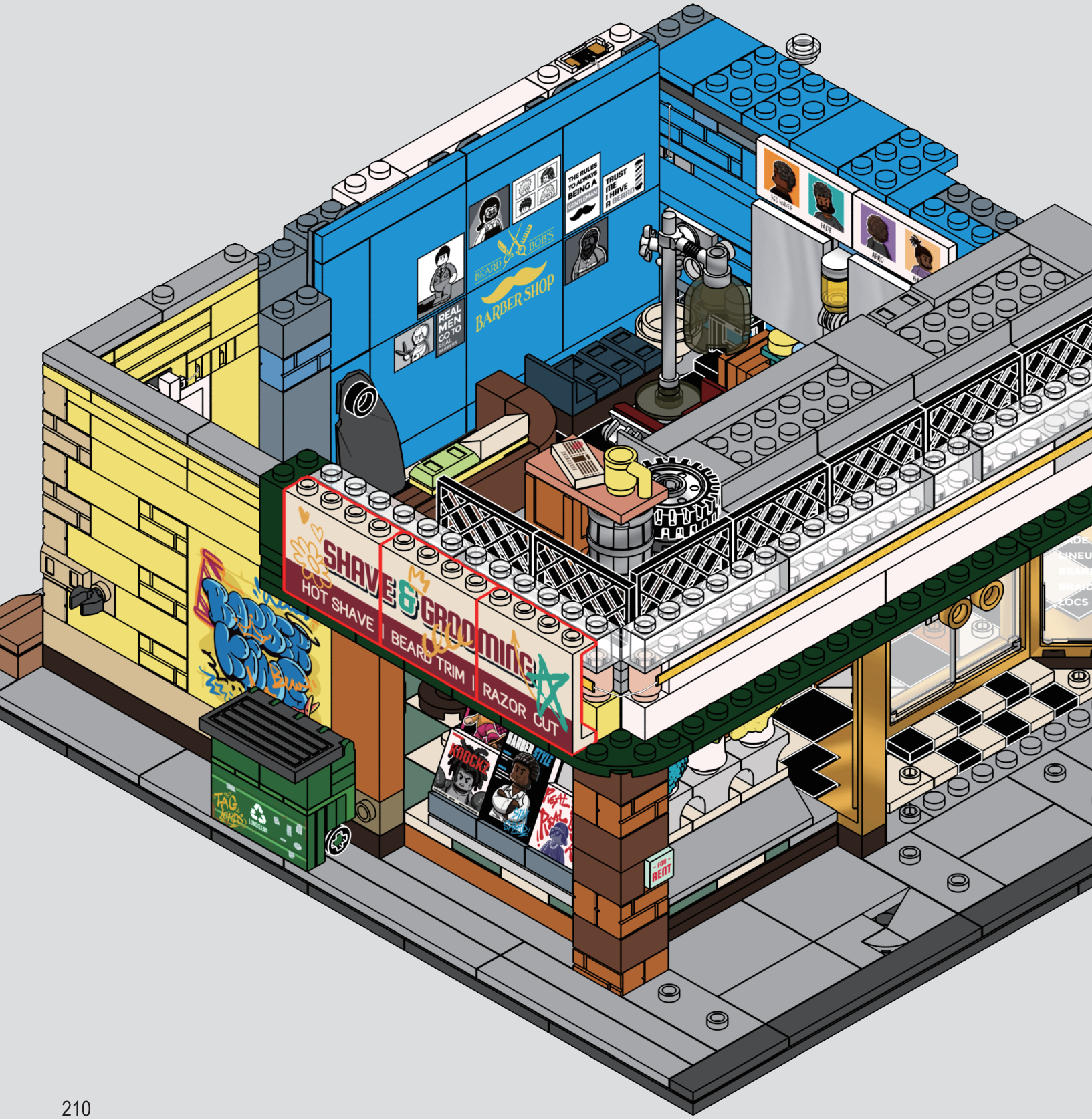
BEARD & BOB'S
BARBER SHOP
REAL MEN GO TO
THE RULES TO ALWAYS BEING A
TRUST ME I HAVE A
SHAVE & GROOMING
HOT SHAVE
BEARD TRIM
RAZOR CUT
FOR RENT

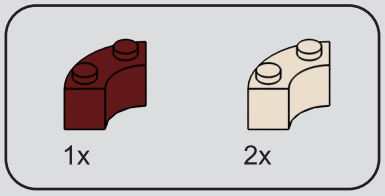

271

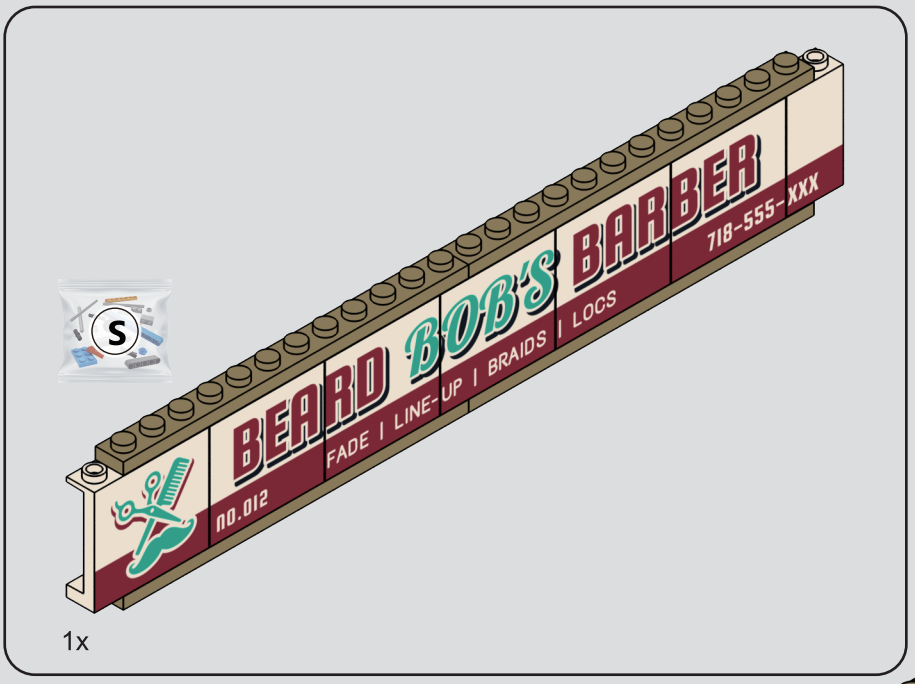
S
BEARD BOB'S BARBER
NO.012
FADE | LINE-UP | BRAIDS | LOCS
718-555-XXX
1x

272

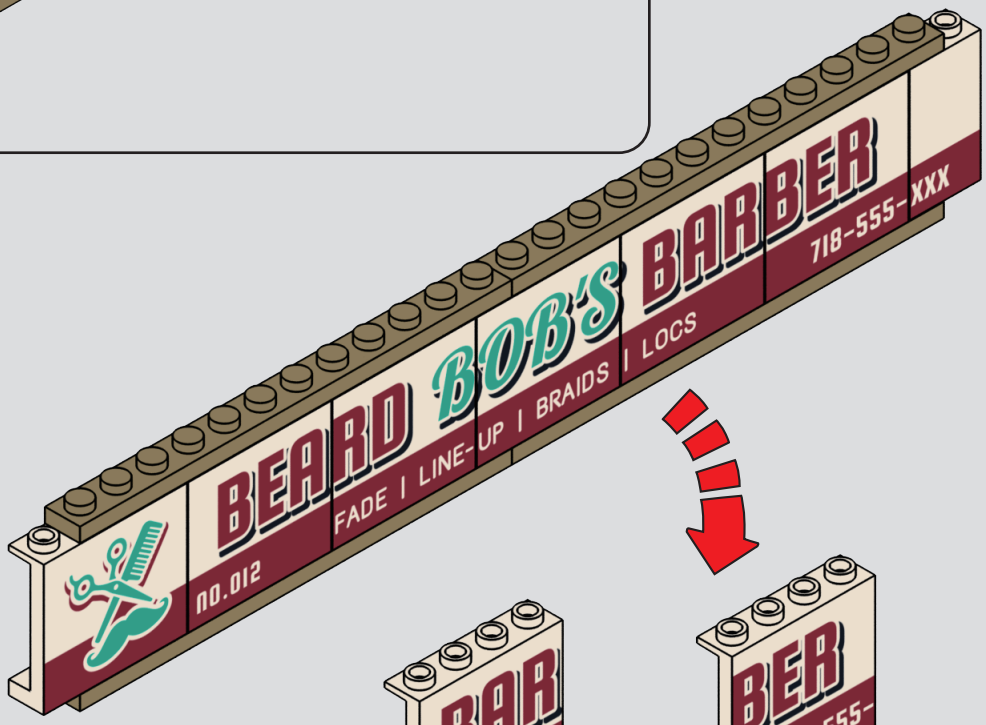
BEARD BOB'S BARBER
NO.012
FADE | LINE-UP | BRAIDS | LOCS
718-555-XXX


BAR
| LOCS
BER
718-555-
XXX
OB'S
UP | BRAIDS
BEA
NO.012
RD B
FADE | LINE-

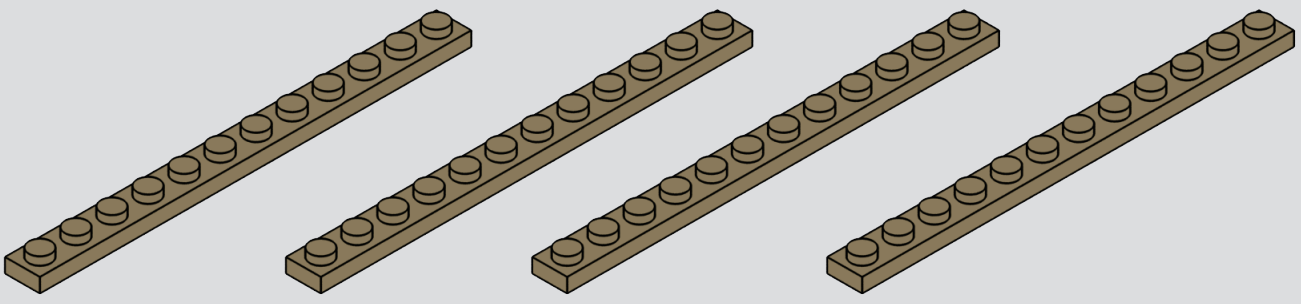

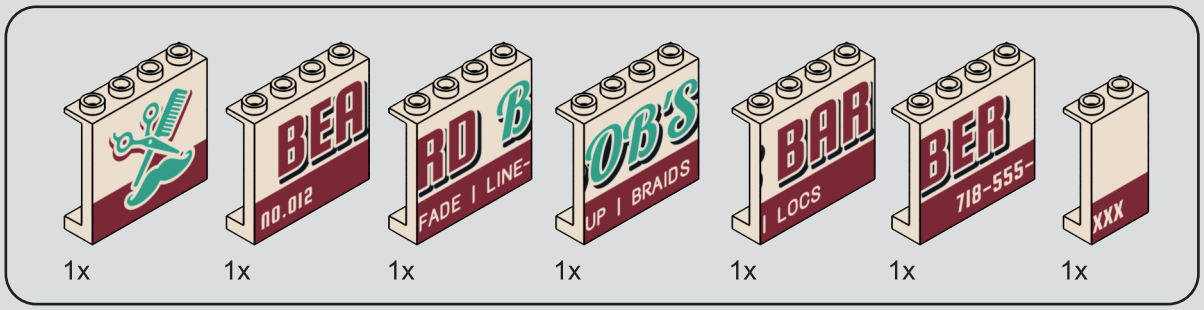

1x 1x 1x 1x 1x 1x 1x

273



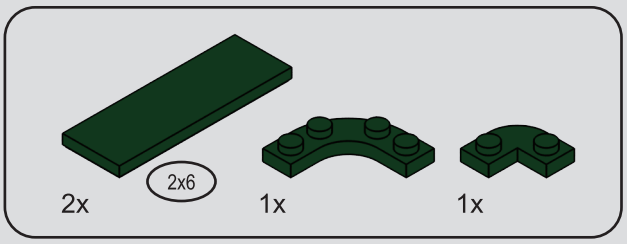
2x
2x6
1x
1x

274

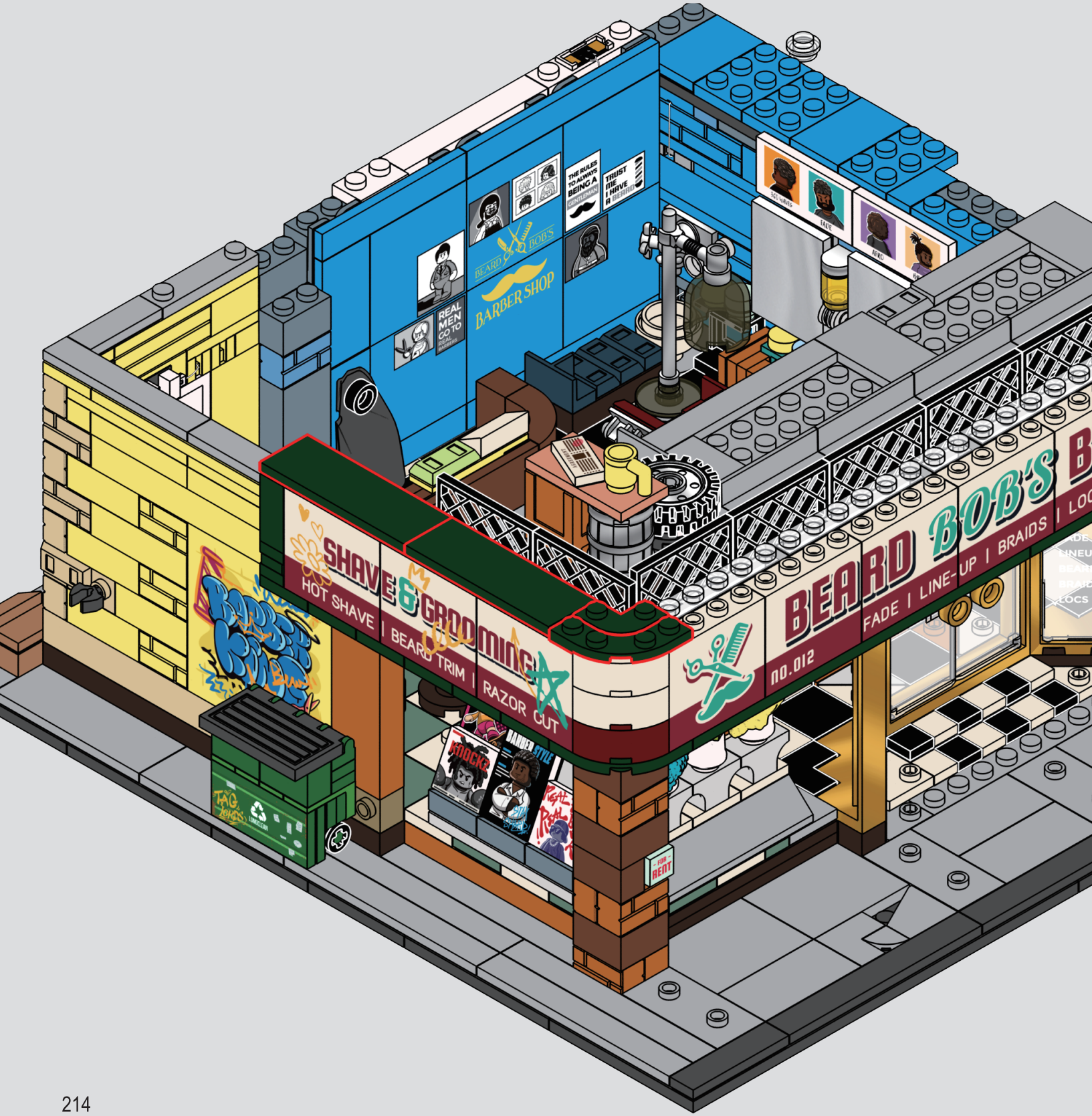
BEARD BOB'S
BARBER SHOP
REAL MEN GO TO BEARD BOB'S
THE RULES TO ALWAYS BEING A GENTLEMAN
TRUST ME I HAVE A BEARD
SHAVE & GROOMING
HOT SHAVE | BEARD TRIM | RAZOR CUT
BEARD BOB'S
FADE | LINE-UP | BRAIDS
NO.012
KNOCKS
BARBER STYLE
FOR REIT

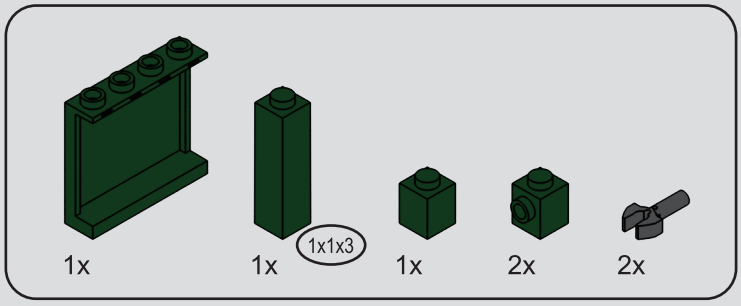
1x
1x
1x1x3
1x
2x
2x

275


1
2
2x
BEARD BOB'S BARBER
FADE | LINE-UP | BRAIDS | LOCS
718-555-XXX

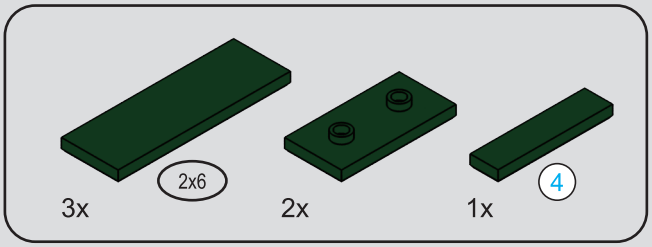
3x
2x6
2x
1x
4


4
1:1

276


BEARD BOB'S BARBER
NO.012
FADE | LINE-UP | BRAIDS | LOCS
718-555-XXX
FOR RENT
REAL MEN GO TO
4

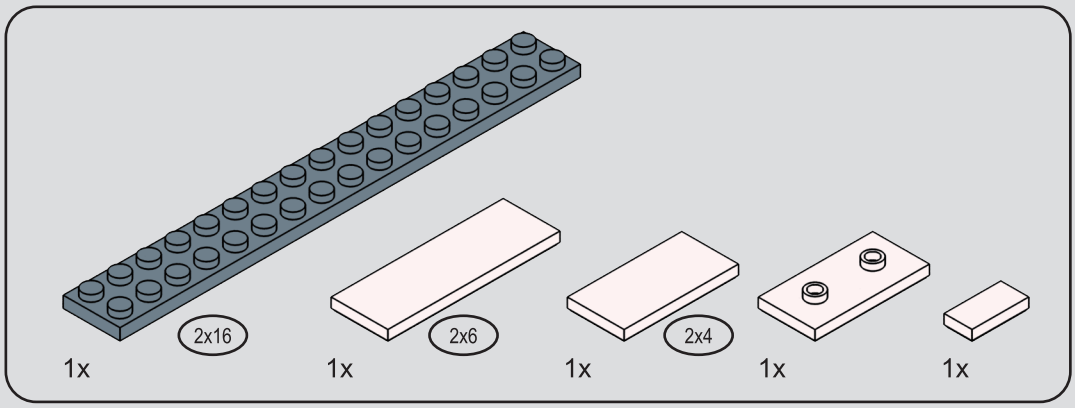

277

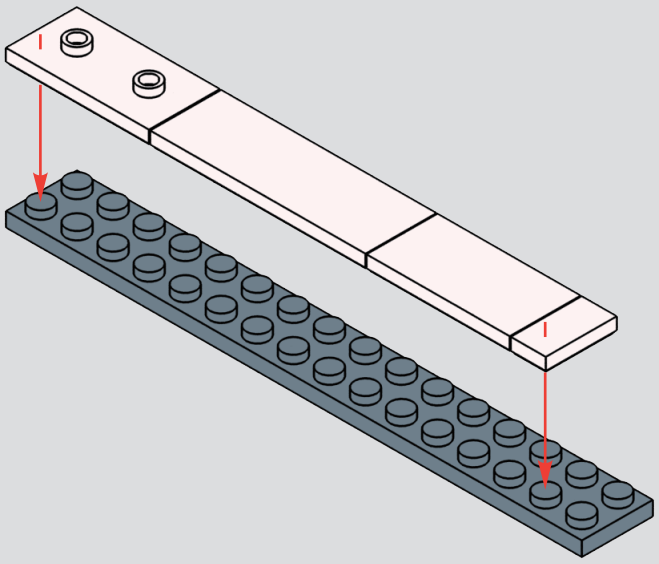

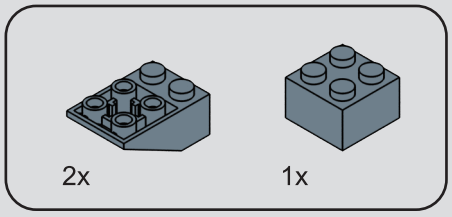

278

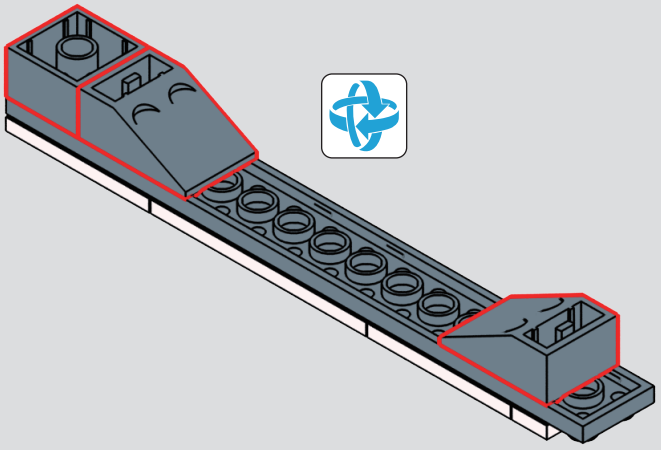

279



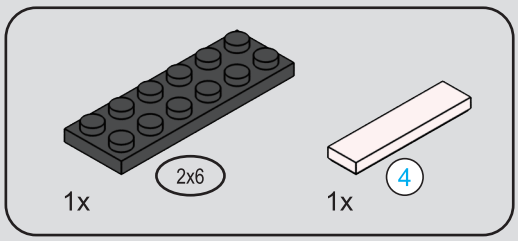

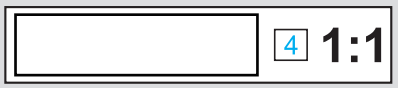

280



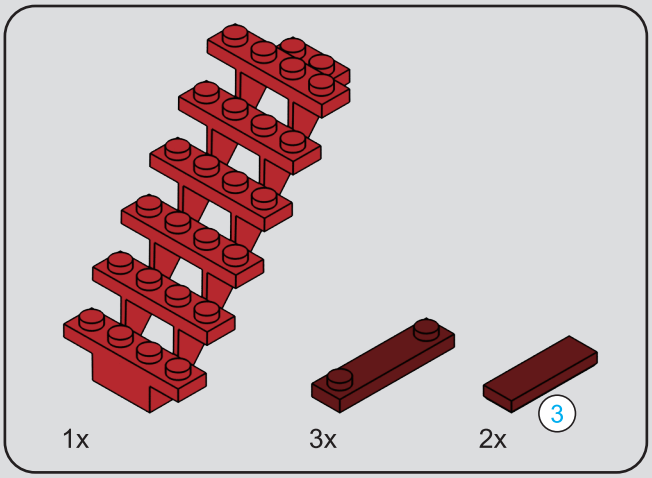

281

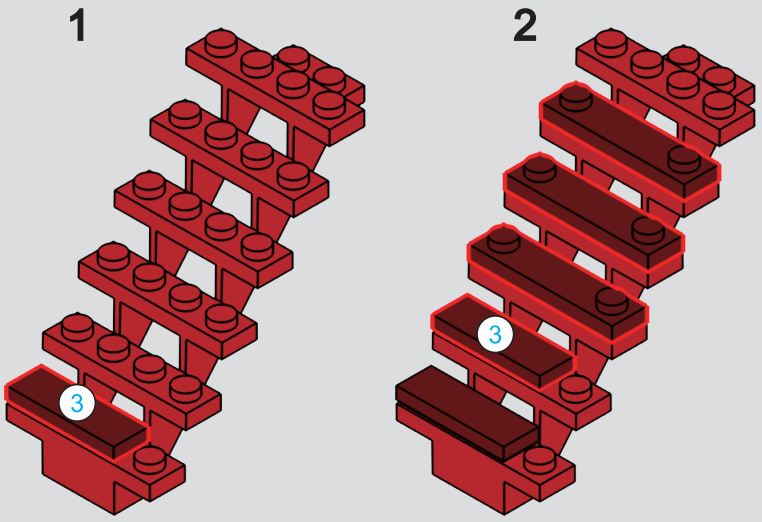

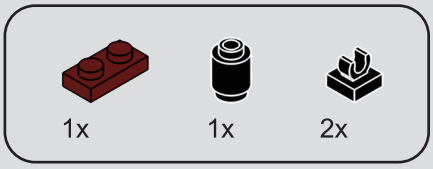

282

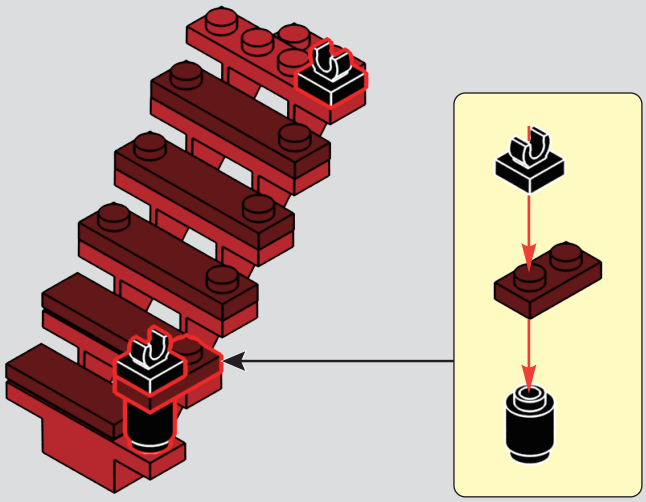

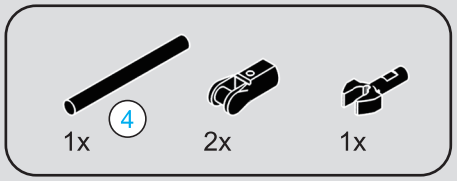



283

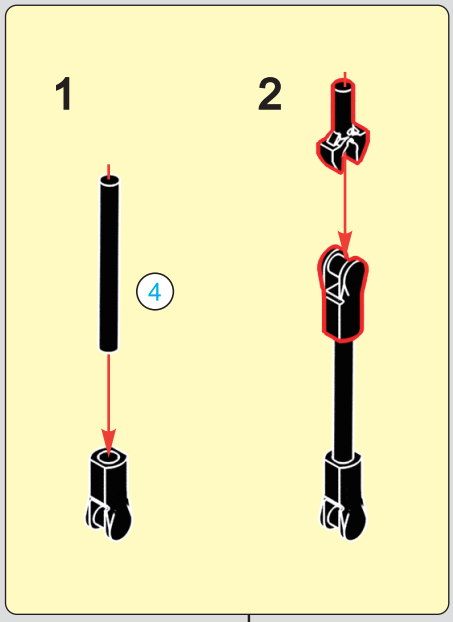

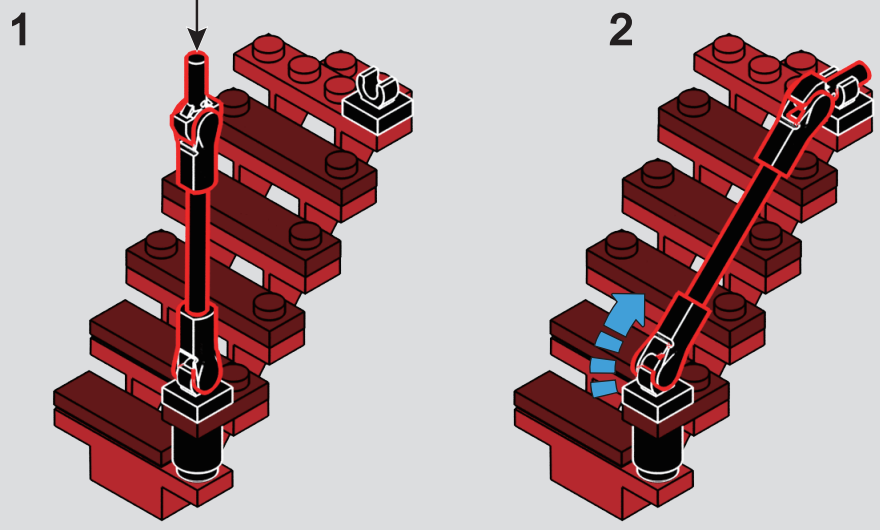

284





1x

285

1

2

2

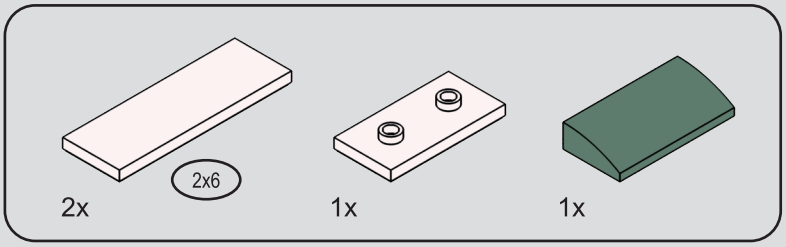

286

6x 6x

287



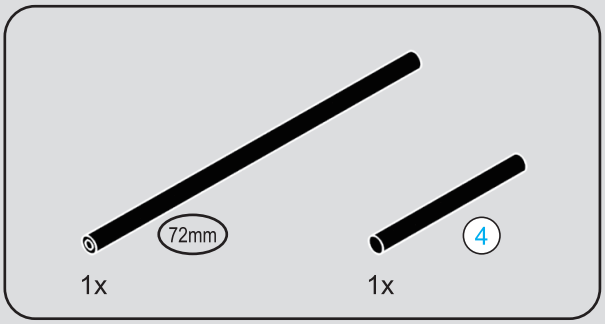



288



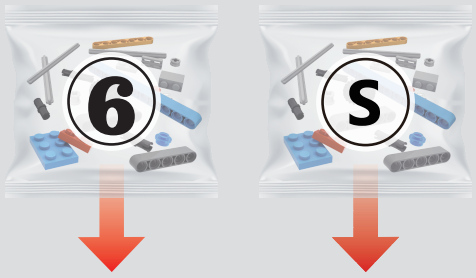
6
S

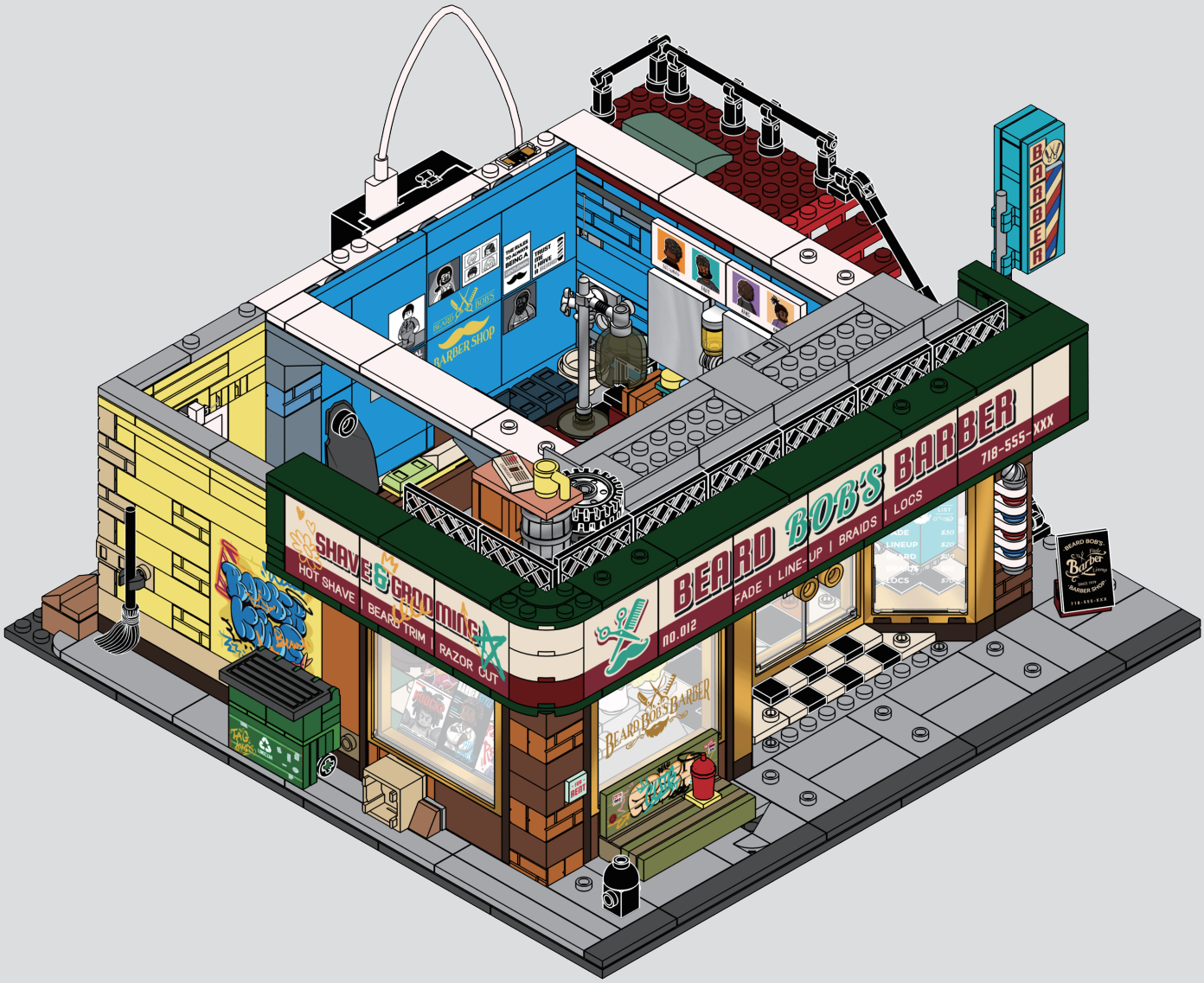
BARBER
BEARD BOB'S BARBER
718-555-XXX
FADE | LINE-UP | BRAIDS | LOCS
NO.012
SHAVE & GROOMING
HOT SHAVE | BEARD TRIM | RAZOR CUT
BARBER SHOP
BEARD BOB'S BARBER

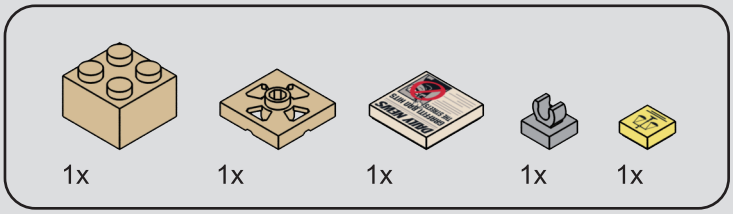

289

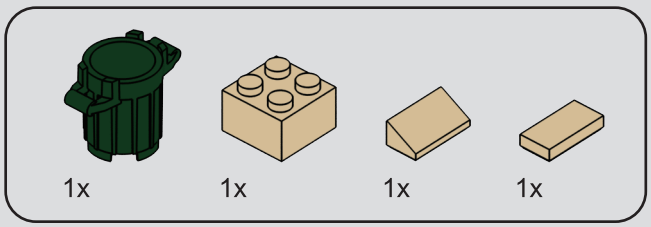

290

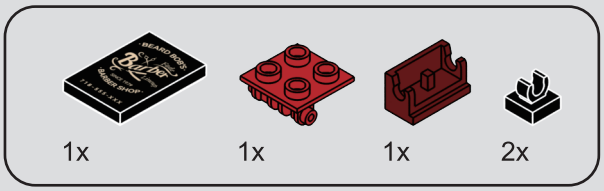
1x
1x
1x
2x

291


BOB'S BARB
LINE-UP | BRAIDS | LOCS
REAL MEN GO TO REAL BARBERS
FLOW
DAILY NEWS
1
2


2x
1x
3
1x

3
1:1

292

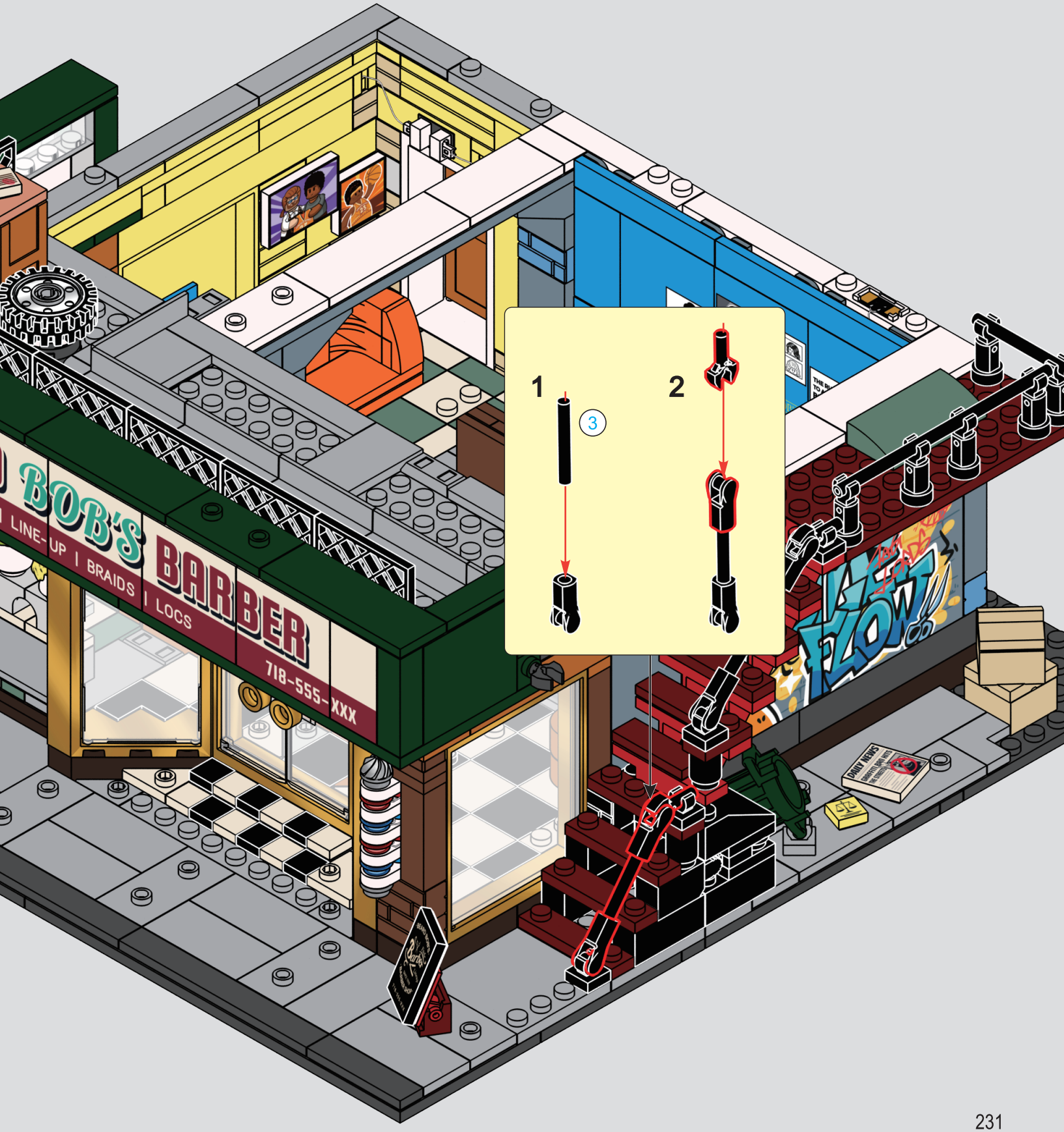
BOB'S BARBER
LINE-UP | BRAIDS | LOCS
718-555-XXXX
FLOW
DAILY NEWS
1
2
3

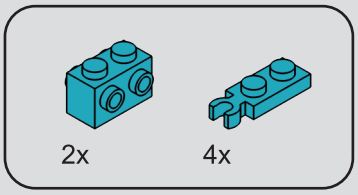

293

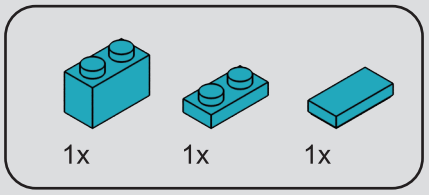

294

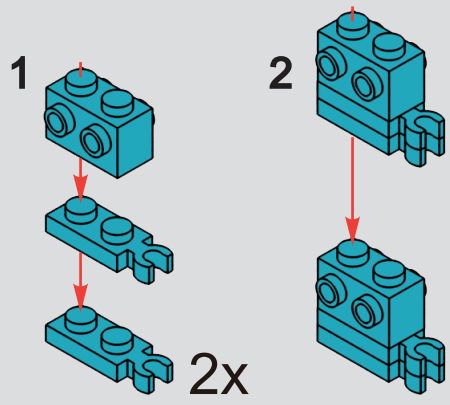

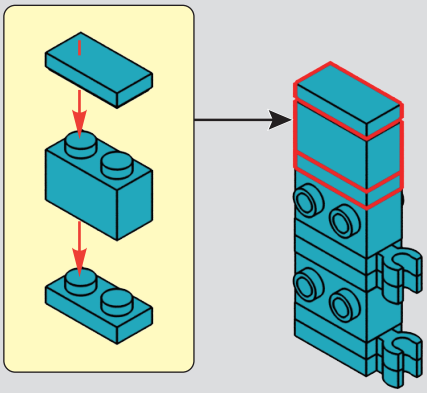

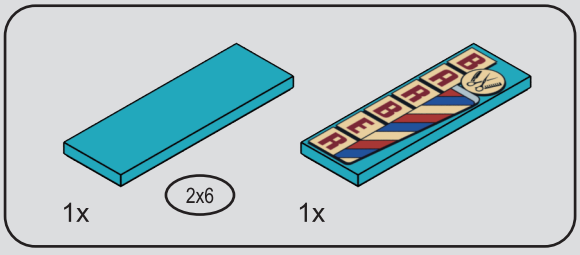

295

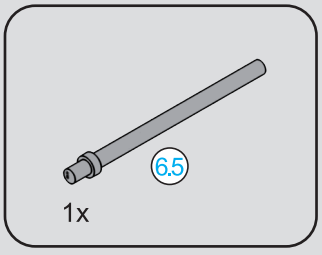

296

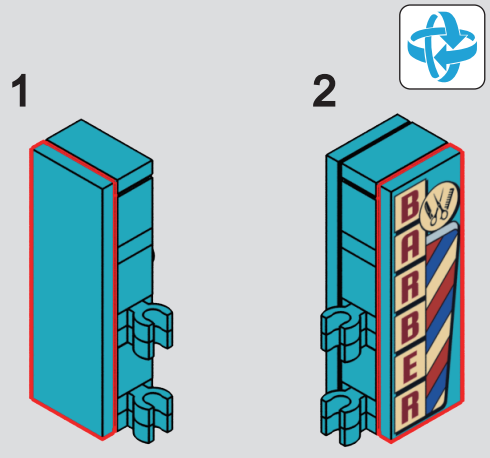

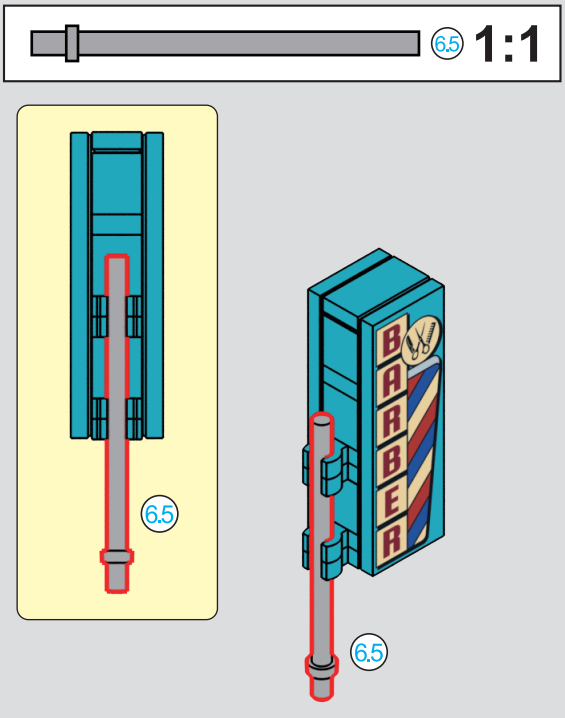

297

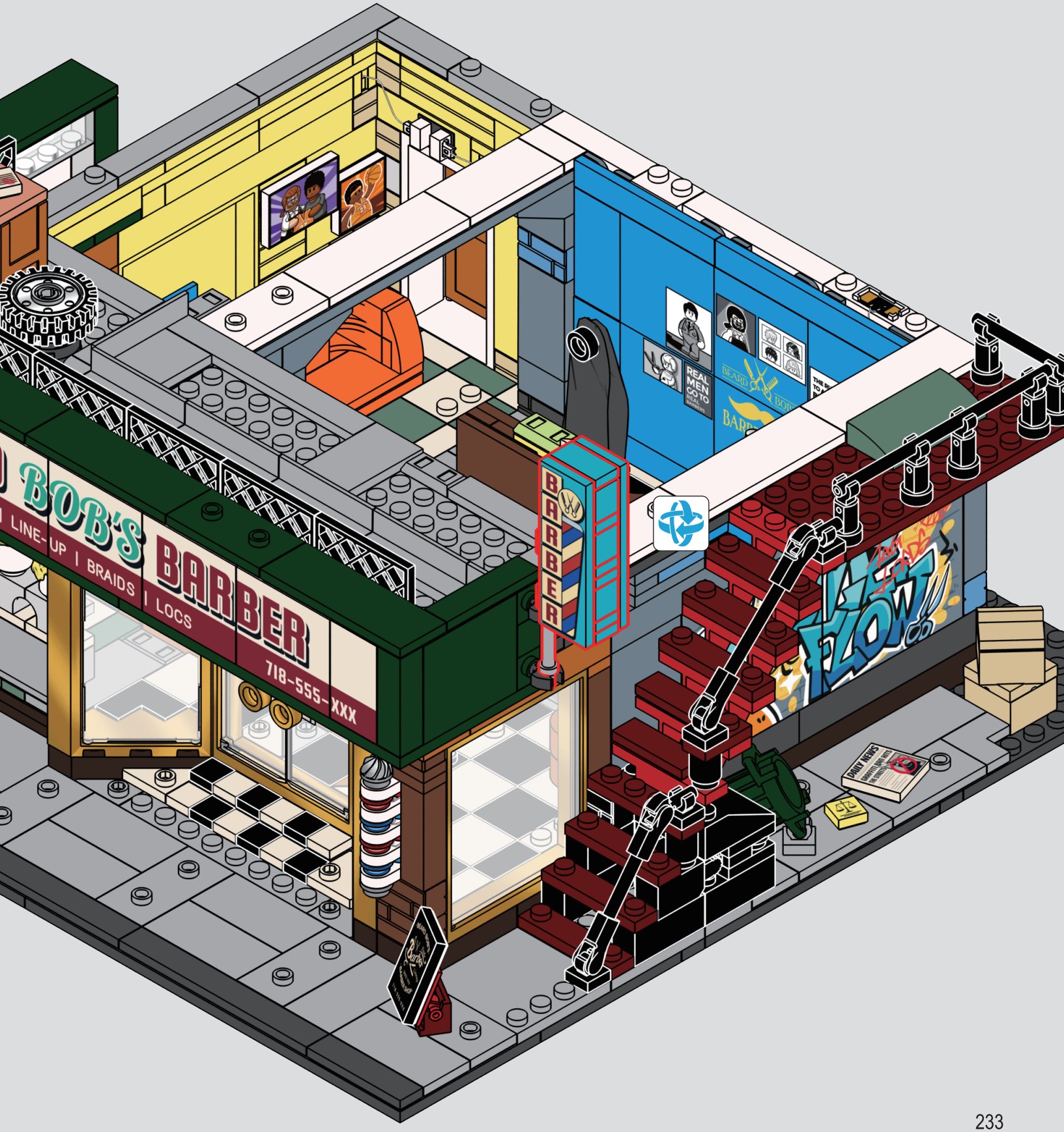
BOB'S BARBER
LINE-UP | BRAIDS | LOCS
718-555-XXXX
BARBER
REAL MEN GO TO REAL BARBERS
FLOW
DAILY NEWS

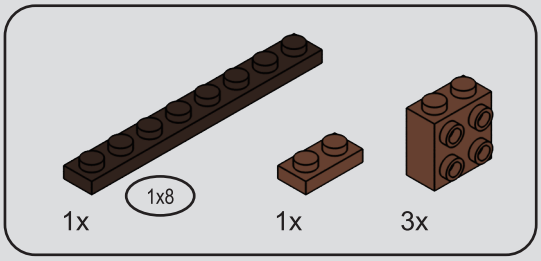

298

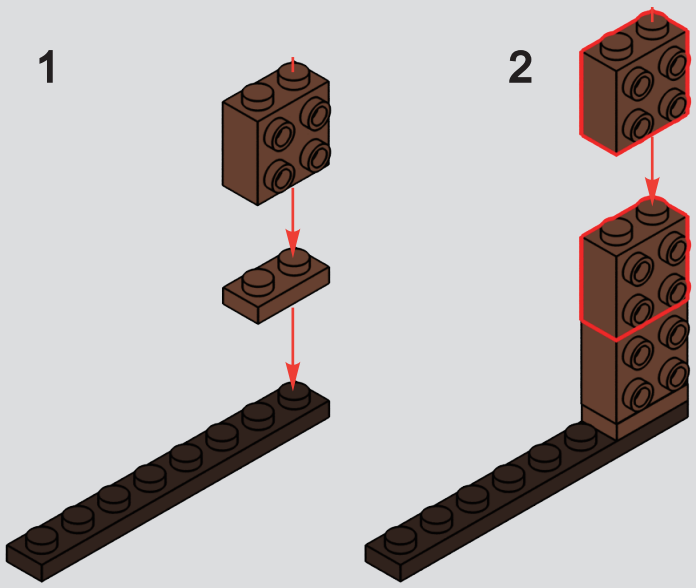

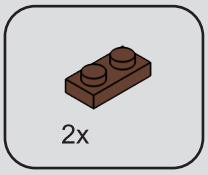

299

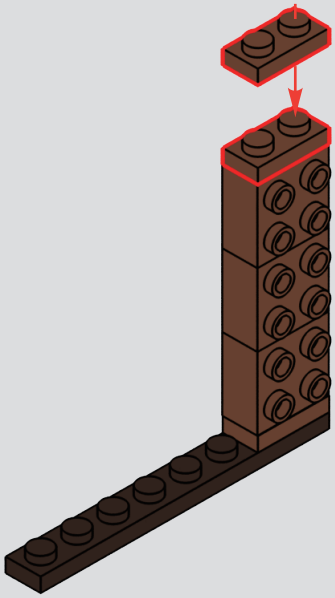

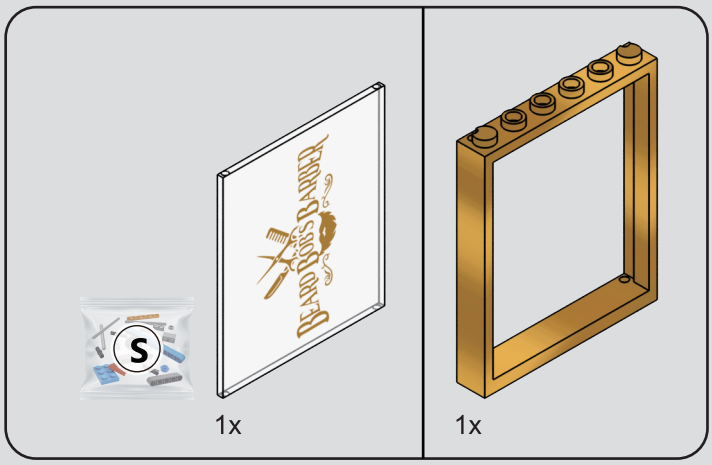

300

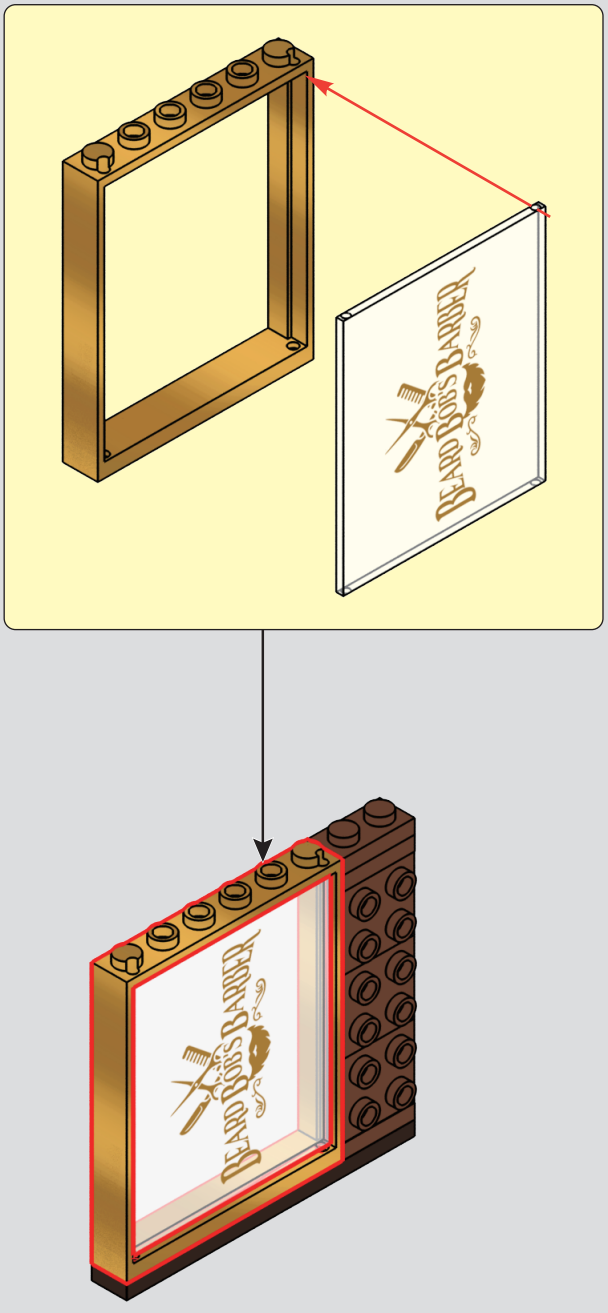

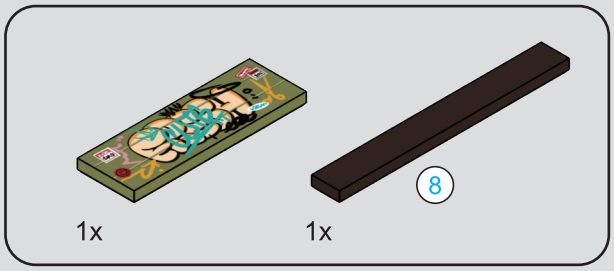



301



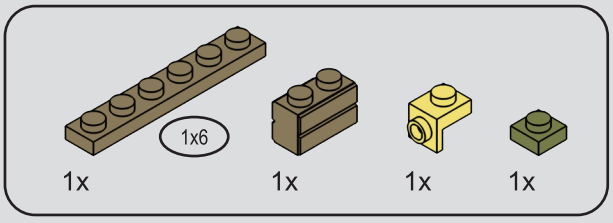

302

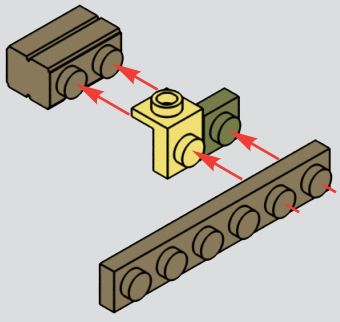

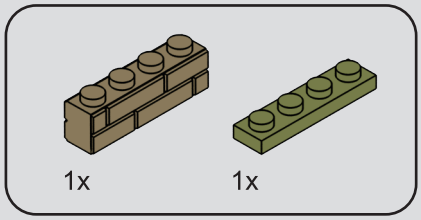

303

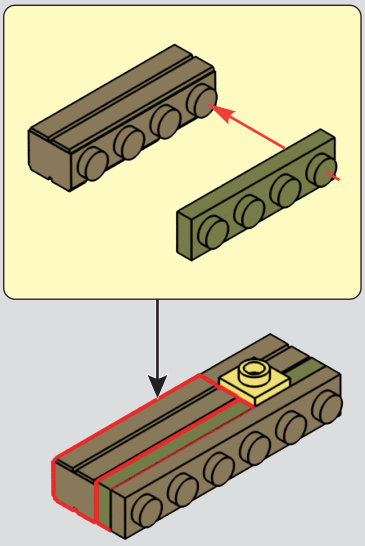

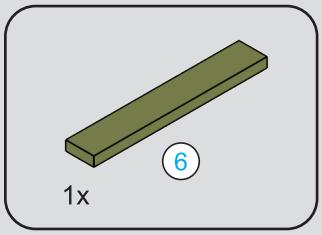



304

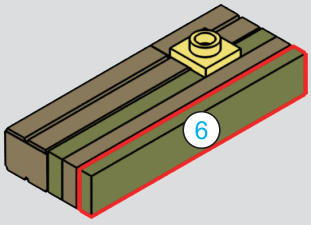

305



306


BEARD BOB'S BARBER
FADE | LINE-UP | BRAIDS | LOCS
718-555-XXX
NO.012
BARBER SHOP
BEARD TRIM | RAZOR CUT
BARBER STYLE
FOR RENT
BARBER

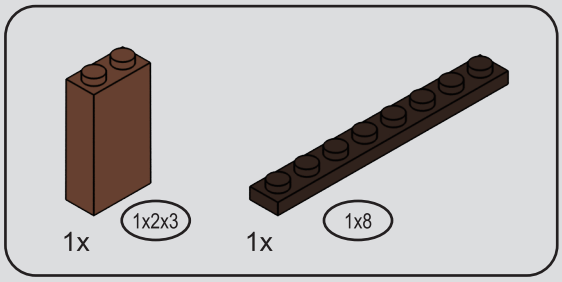

307

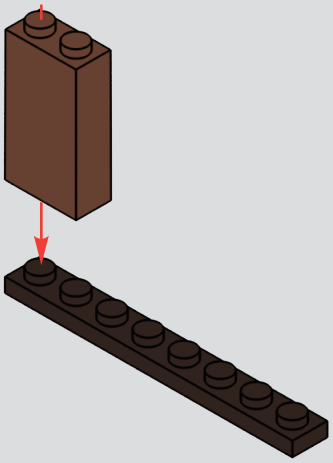

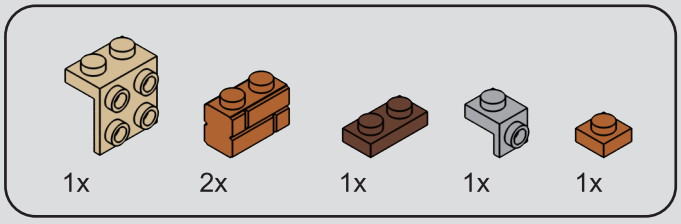

308

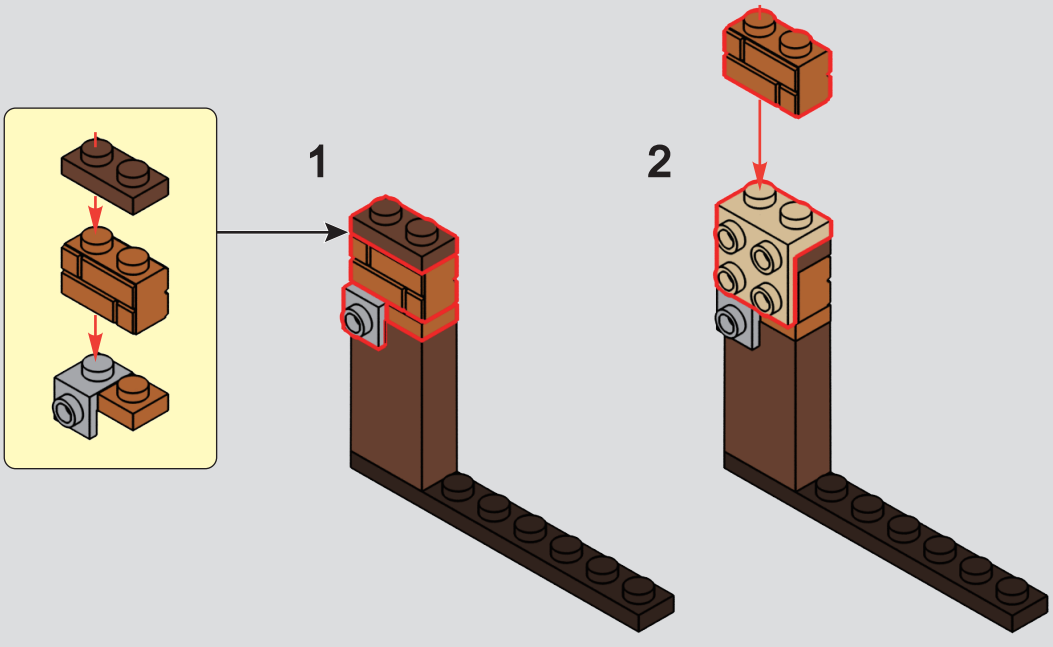

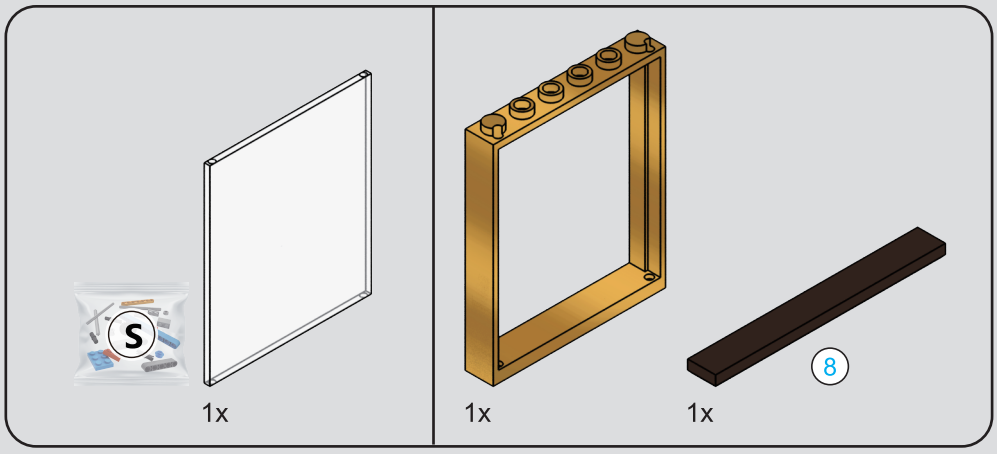

309

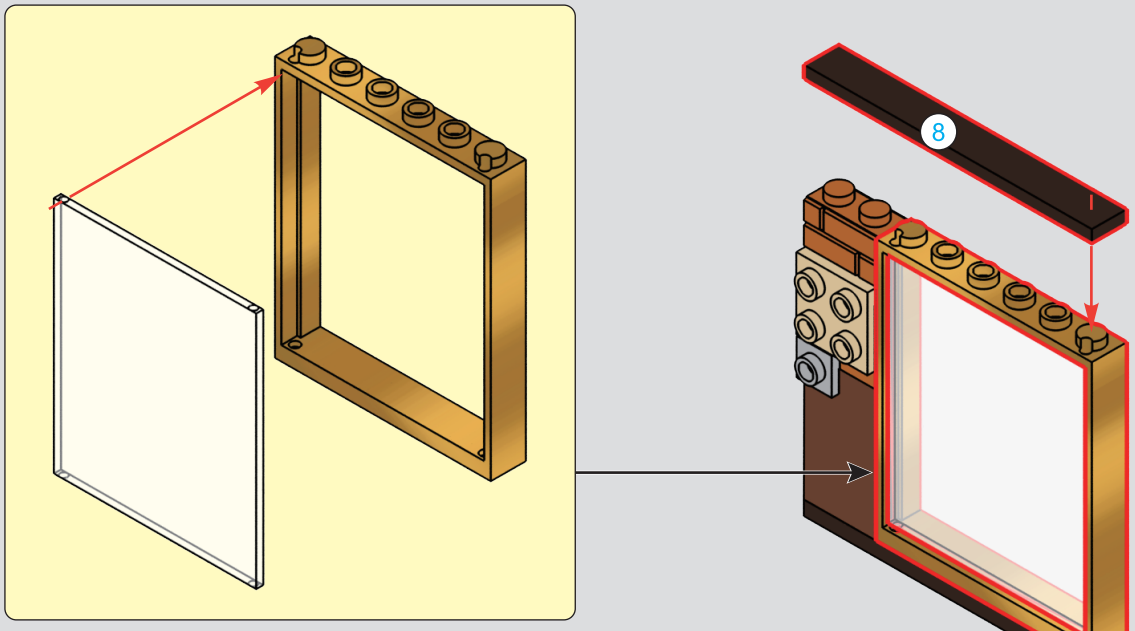



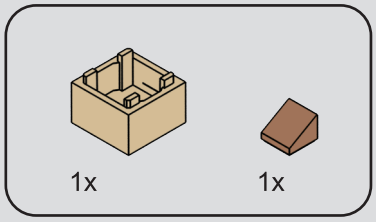

310

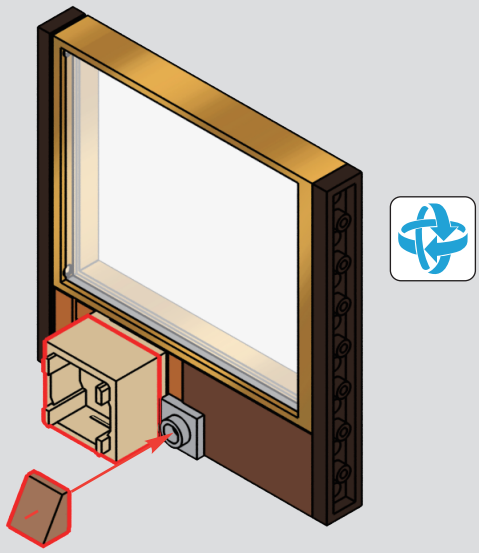

311


BEARD BOB'S
BARBER SHOP
THE RULES TO ALWAYS BEING A GENTLEMEN
TRUST ME I HAVE A BEARD
SHAVE & GROOMING
HOT SHAVE | BEARD TRIM | RAZOR CUT
BEARD
FADE | LINE
NO.012
BEARD BOB'S BARBER
FOR RENT

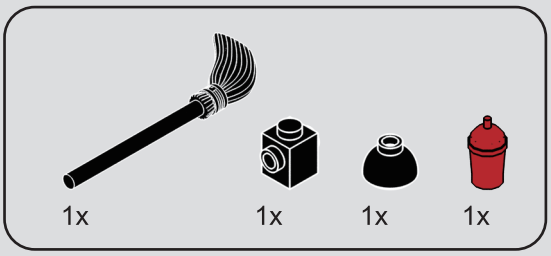
1x
1x
1x
1x

312


BEARD BOB'S
BARBER SHOP
THE RULES TO ALWAYS BEING A GENTLEMAN
TRUST ME I HAVE A BEARD
SHAVE & GROOMING
HOT SHAVE | BEARD TRIM | RAZOR CUT
BEARD
FADE | LINE-
NO.012
BEARD BOB'S BARBER
FOR RENT

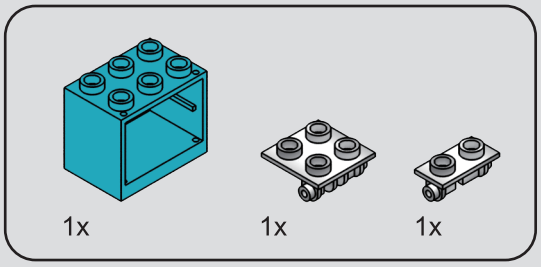

313

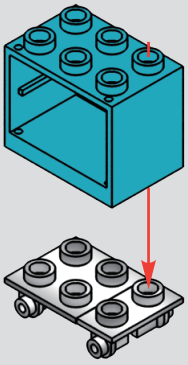

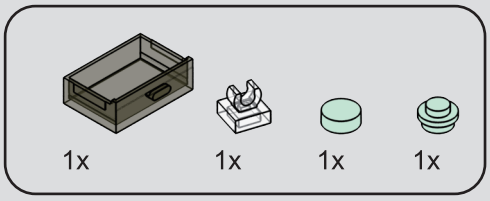

314

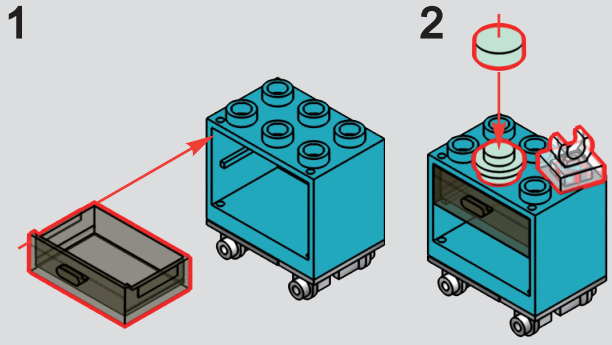

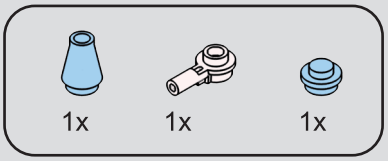

315

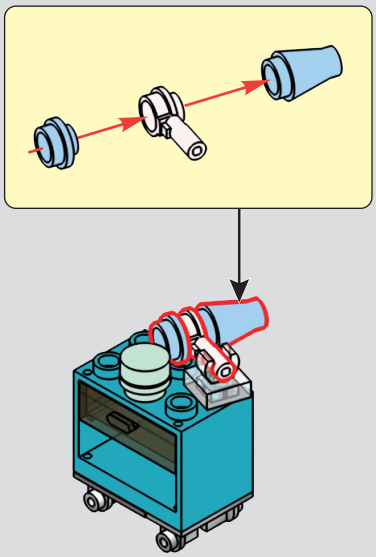

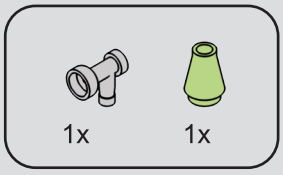

316

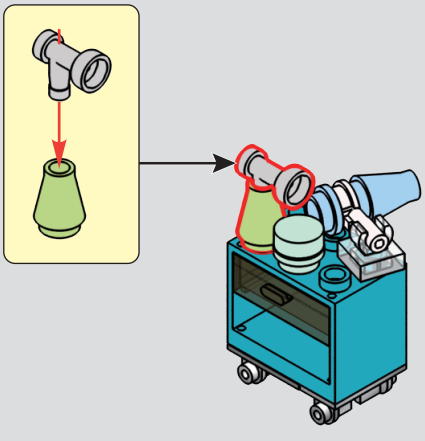

317



318

1

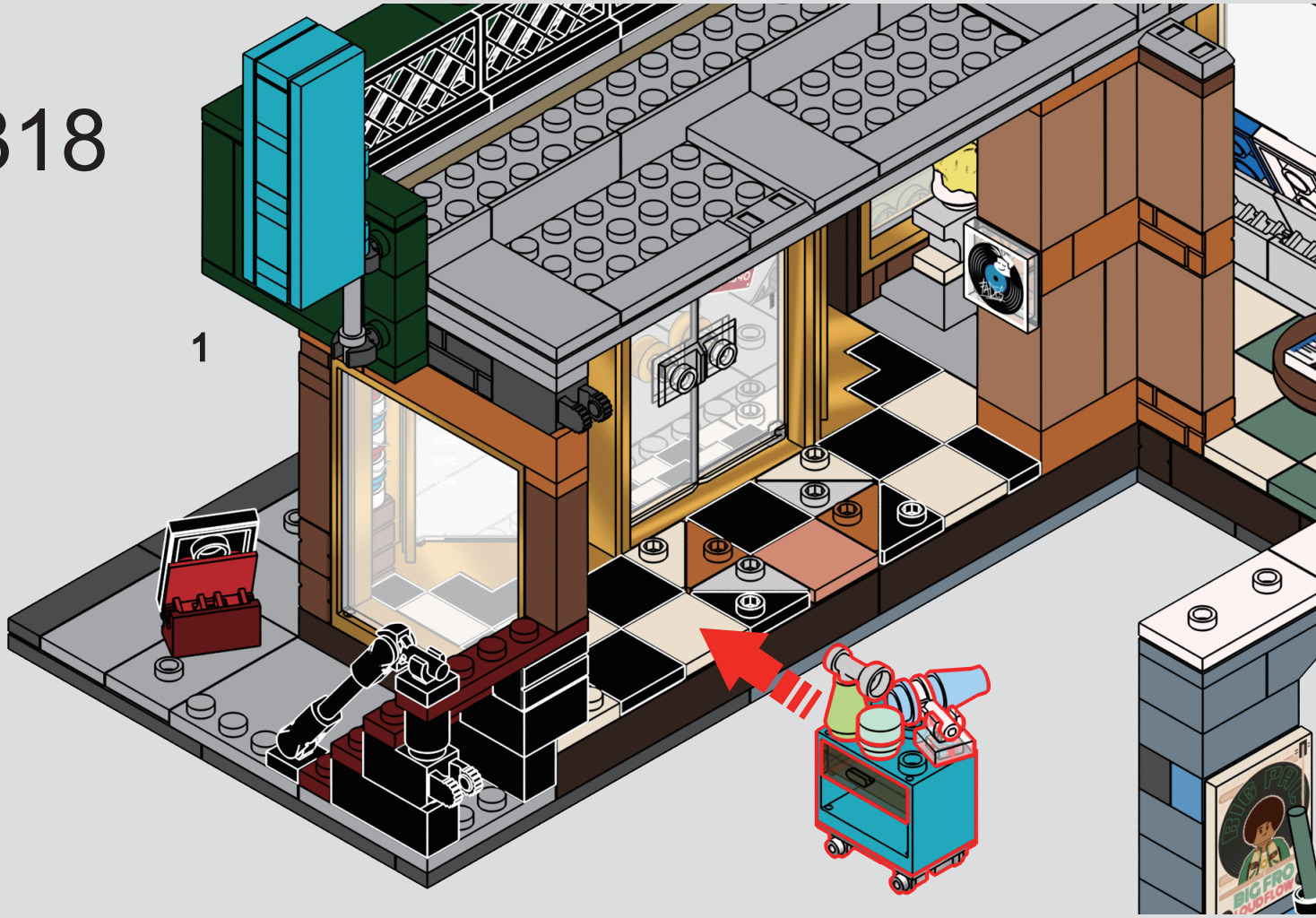

2

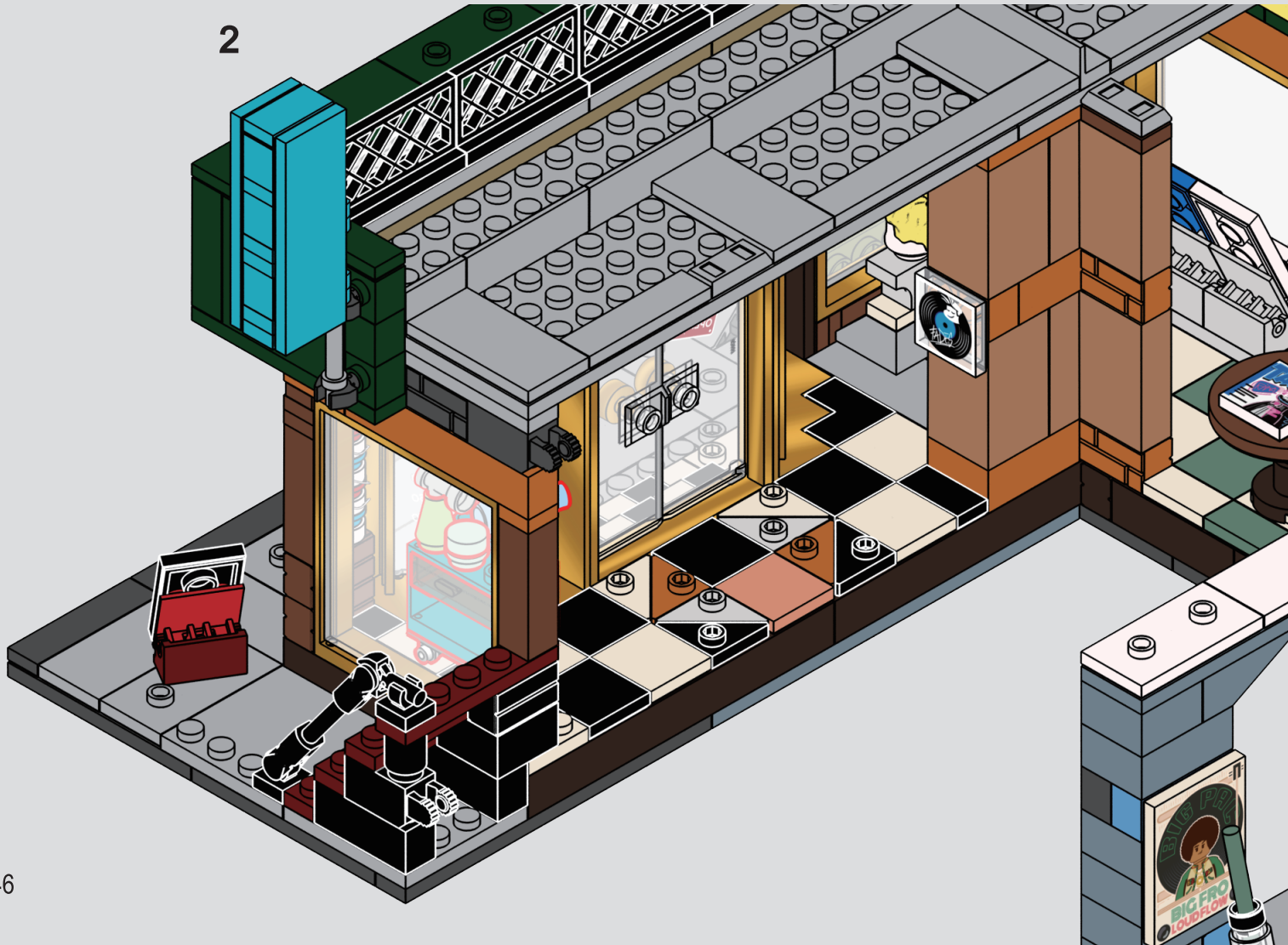

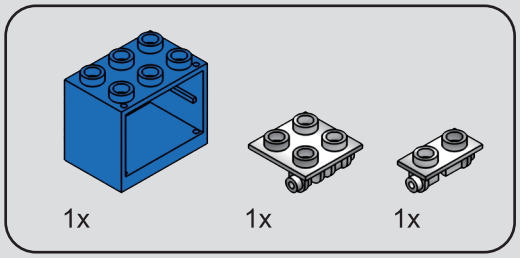

319

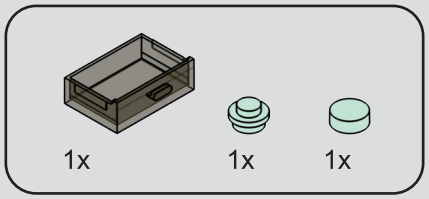

320

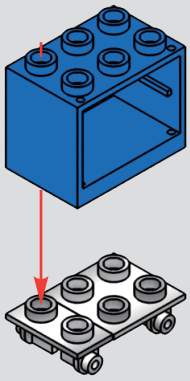

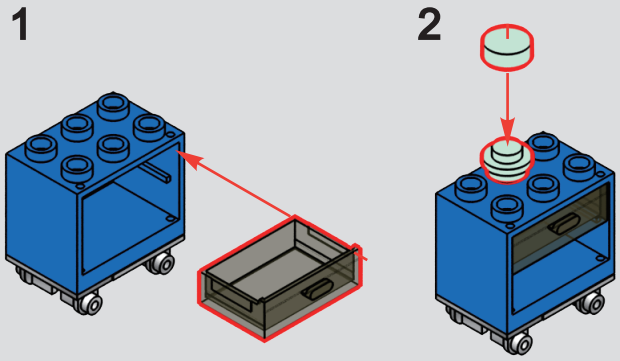

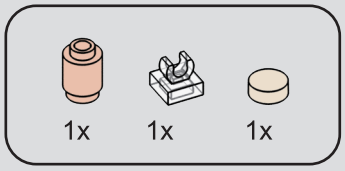

321

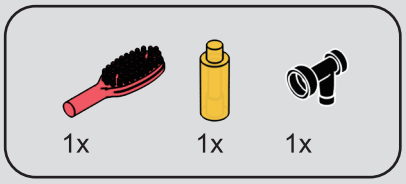

322

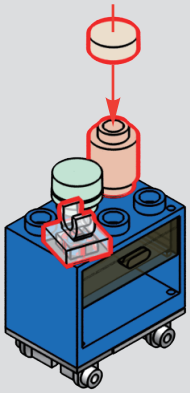

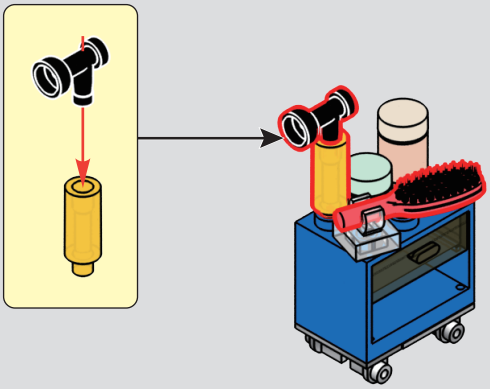

323



324

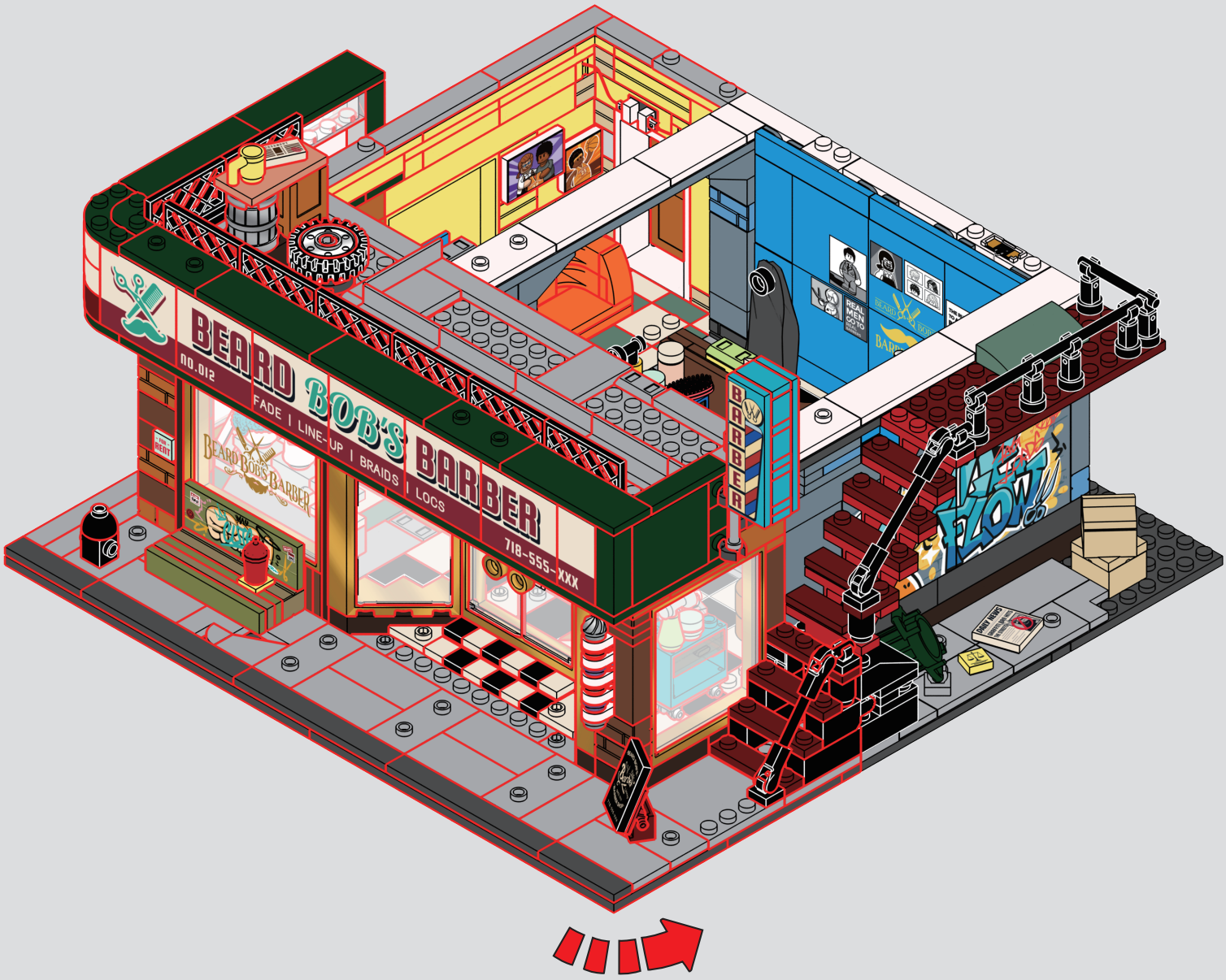
BEARD BOB'S BARBER
NO.012
FADE | LINE-UP | BRAIDS | LOCS
718-555-XXX
BARBER
WOW!

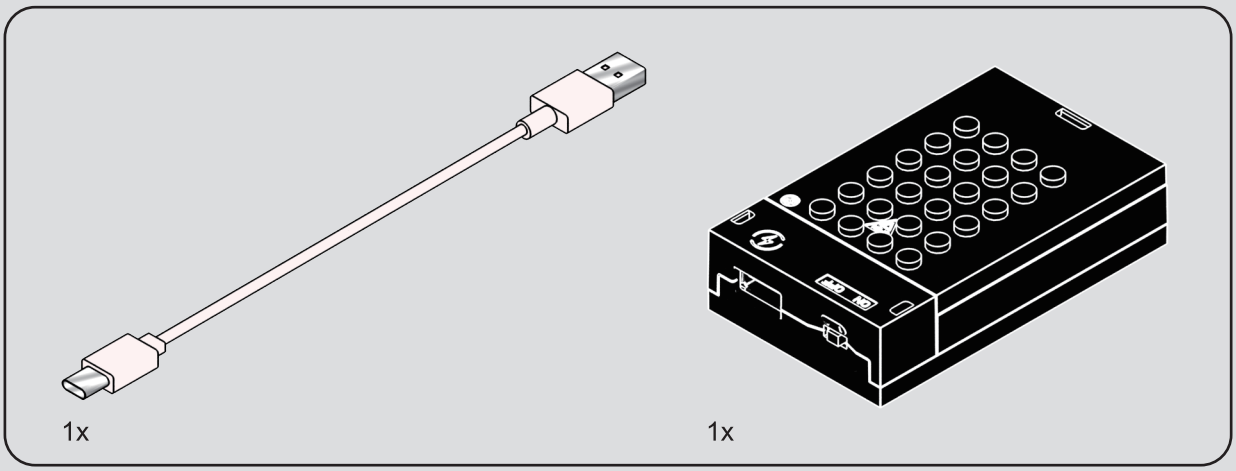
1x
1x

325

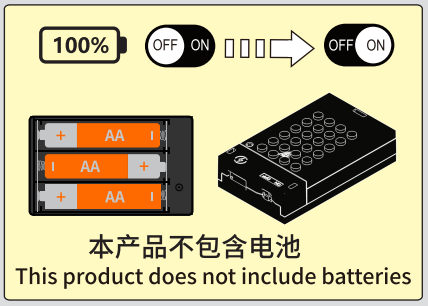
100%
OFF ON
OFF ON
AA
AA
AA
本产品不包含电池
This product does not include batteries

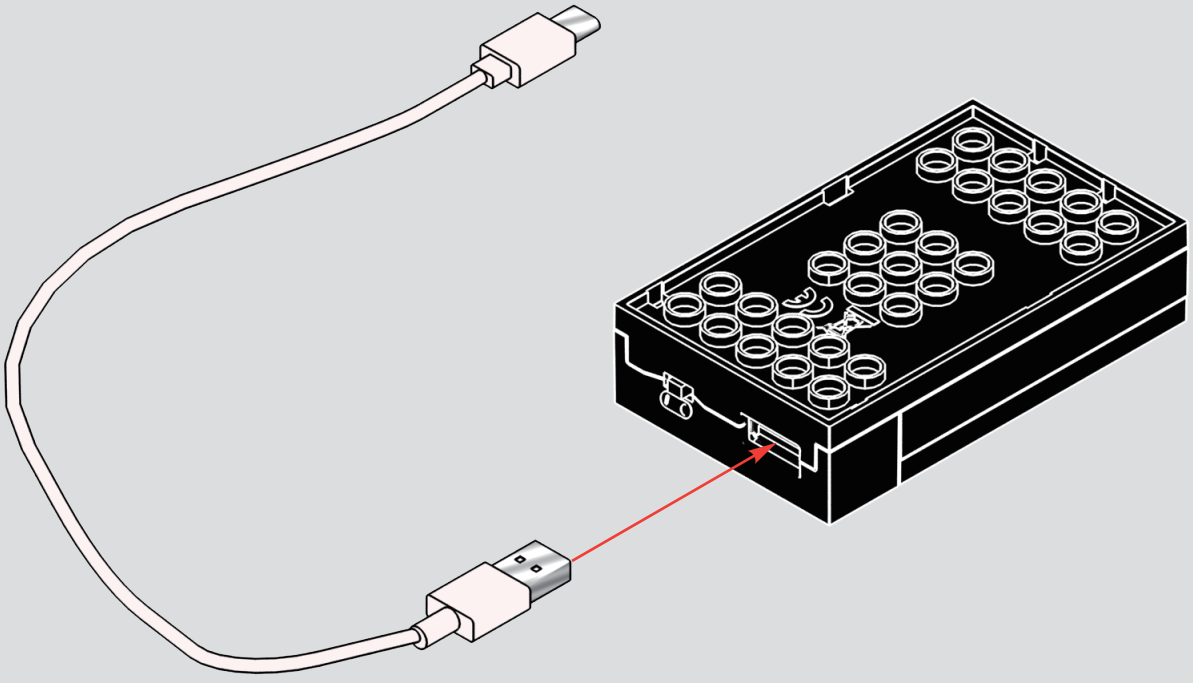

326

1



2

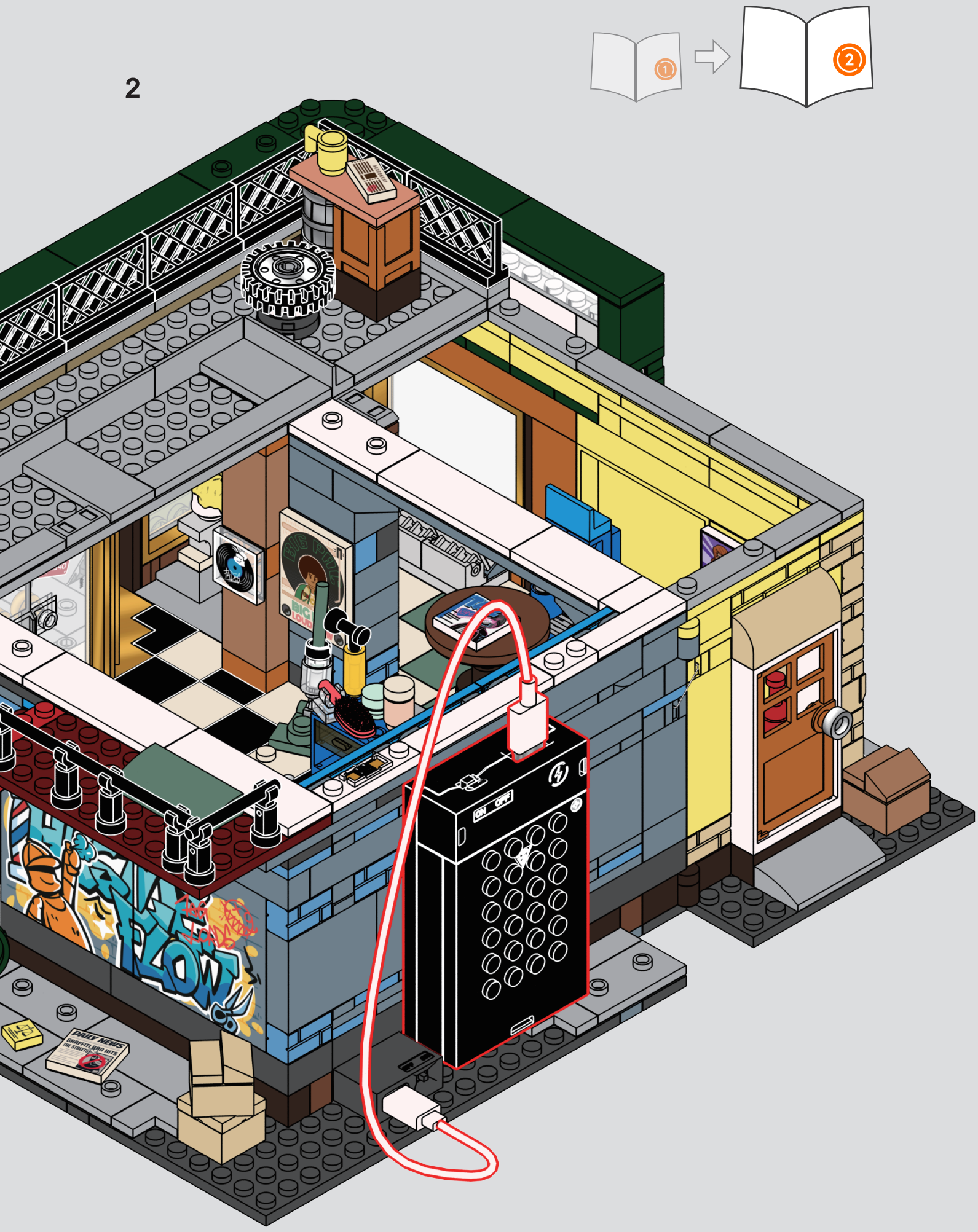
1
2
BIG PHILL
BIG LOUD
ON OFF
DAILY NEWS
GRAFFITI BAN HITS THE STREETS

美式街头系列

感谢您对本系列产品的喜爱与支持，如您在拼搭过程中遇到任何问题，均可通过微信扫描二维码联系企微客服寻求协助。
如果您还有其他意见或者建议，也请务必通过企微客服告知我们，期待与您的再次相遇！

企微客服

STREET FUSION

We would like your opinion on the new product you have just purchased. Your feedback will help shape the future development of this product series.
Please visit: https://www.lumibricks.com/pages/feedback
We sincerely hope you enjoy the product and we can't wait to see you again soon.Please let us know if we can do anything else to help!



Lumibricks and Lumibricks logo are trademarks of the Lumibricks group.

WWW.LUMIBRICKS.COM

如果您遇到任何问题，请通过以下方式与我们联系：

天猫 小红书

lumibricks灯搭官方旗舰店

会员中心