LUMIBRICKS™

19012
2557PCS
16+



MULTI-FORM MODULAR BUILDING

Y'ALL NEXT!
BEARD BOB'S
BARBER
RUNNIN' THE CHAIR SINCE '79

BEARD BOB'S BARBER
NO.012 FADE | LINE-UP | BRAIDS | LOCS 718-555-XXX
SHAVE & GROOMING
HOT SHAVE | BEARD TRIM | RAZOR CUT

212 555 XXXX

BARBER

FOR RENT

PRICE LIST
FADE $30
LINEUP $20
BEARD $20
BRAIDS $60
LOCS $70

2

Scan the QR code
for a PDF instruction

扫码关注公众号
获取电子版说明书

Barbershop
Street Fusion

ABOUT LUMIBRICKS

Welcome to Lumibricks, where imagination meets illumination in the brick world!

Formerly known as FUNWHOLE, the world's first lighting bricks manufacturer, Lumibricks continues its legacy as a trailblazer in the world of building brick sets with a unique twist - integrated lighting that transforms every creation into a radiant masterpiece.

Every Lumibricks' set celebrates the joy of building and the magic of illumination. Whether you're crafting intricate architectures or imaginative scenes, the design details and lighting features bring the sets to life, and also bring you joy and shine whether it is the day or night.

At Lumibricks, we believe in the power of light to transform and elevate. With our slogan, "Delight day and night," we invite you to explore the possibilities of illuminated brick sets. Discover a hobby that doesn't just shine - it glows with your inner creativity.

欢迎来到Lumibricks灯搭的乐园

在这里，我们不仅仅是玩具制造商，我们还是创造快乐的艺术家。

自2014年诞生起，Lumibricks灯搭（原FUNWHOLE）就坚守一个独特的愿景：在日与夜的交替中，为我们的玩家揭示积木之美的无限可能。

作为全球领先的灯光积木品牌，本着充分表现积木套装整体之美的初衷，Lumibricks致力于灯光积木套装产品的开发，将积木与灯光合为一体。

Lumibricks不仅仅是一套普通的积木，更是代表了一种全新的玩乐方式，每一块积木，每一束光线，都承载着我们带给全球数百万家庭更多欢笑的承诺。

我们相信，积木有灯，生活有光，让Lumibricks与你一起，拼搭出更多乐趣，创造属于你的灯光宇宙。

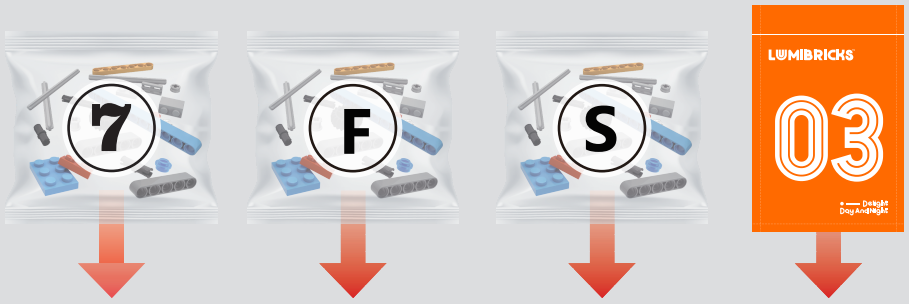
7
F
S
LUMIBRICKS
03

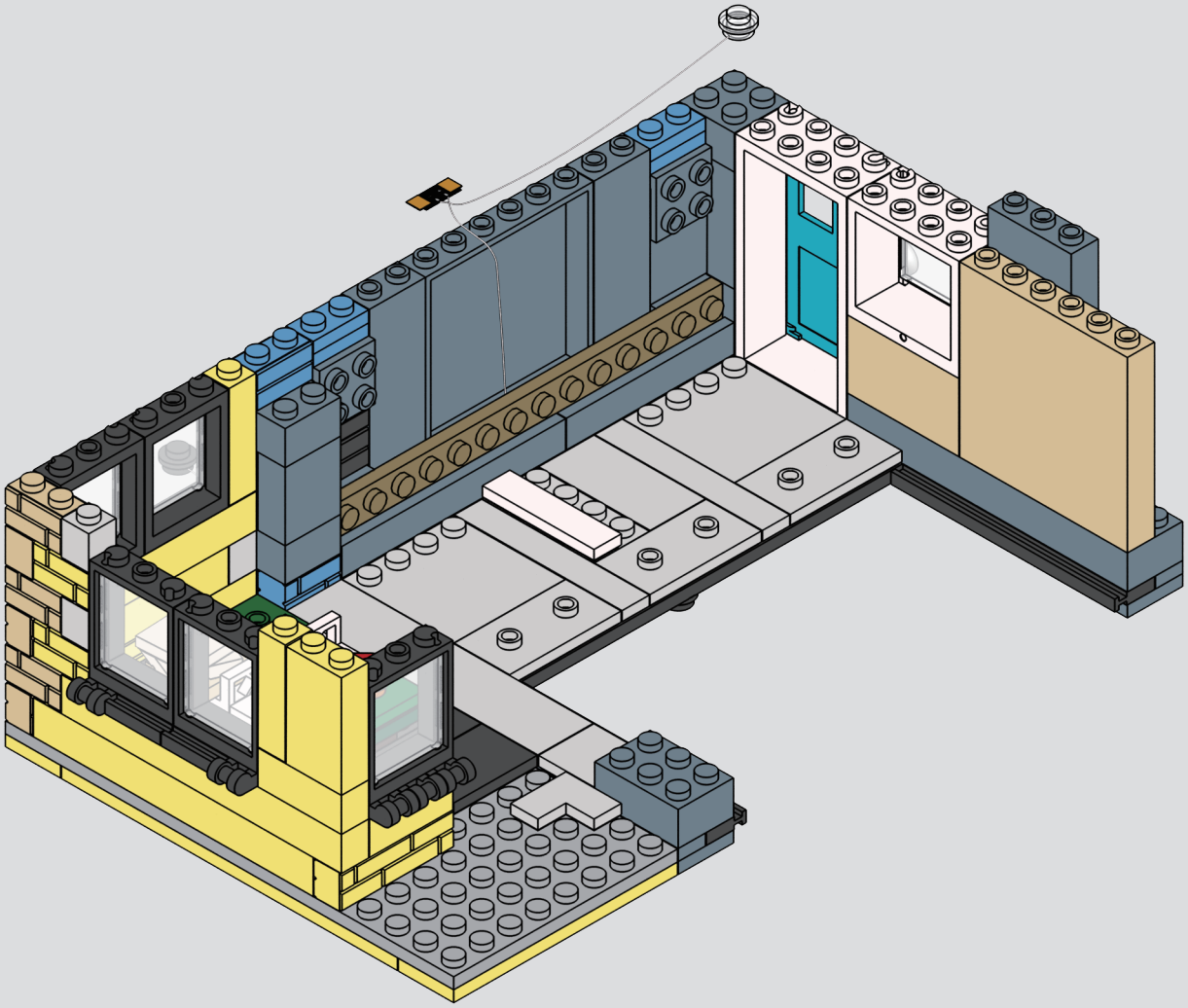

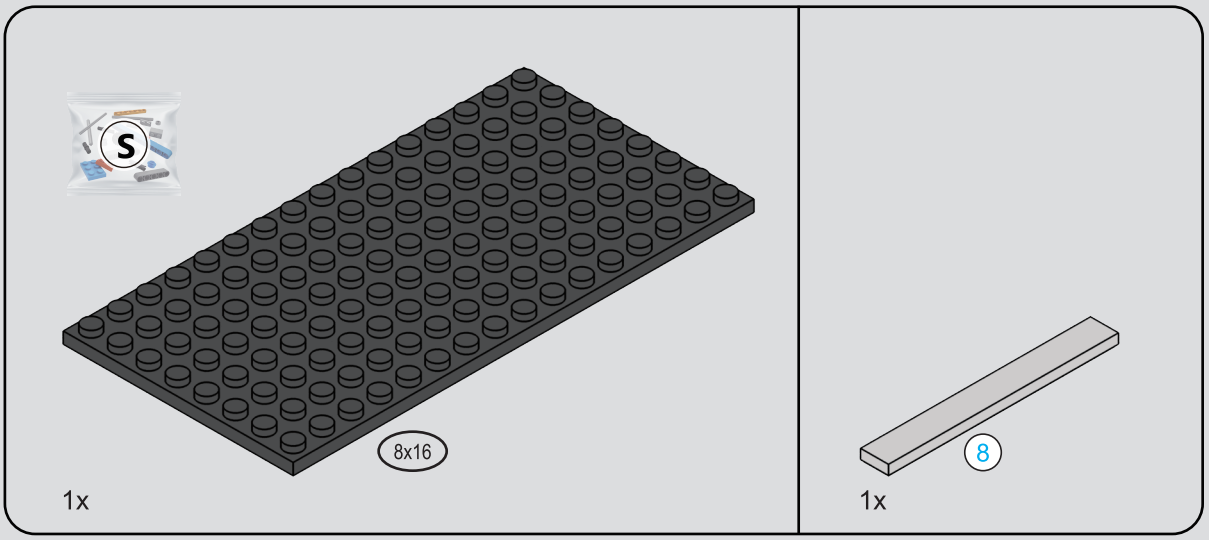

1

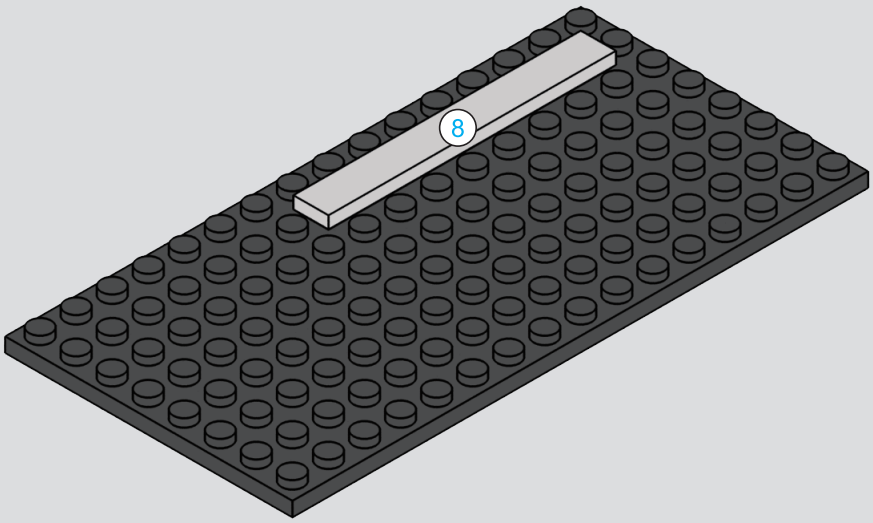

8 1:1

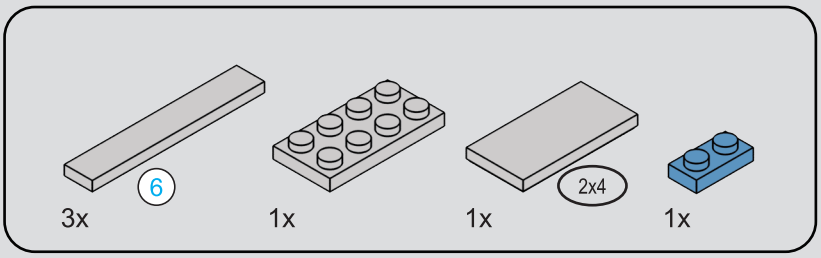



2

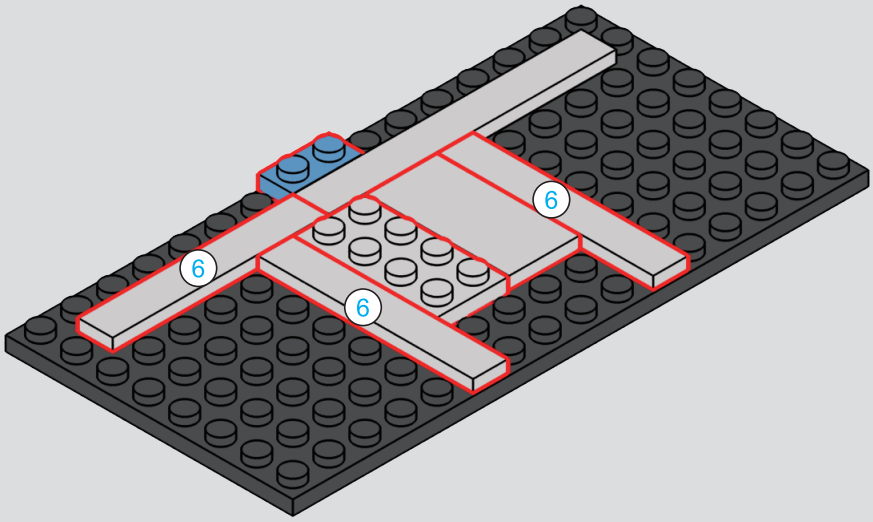

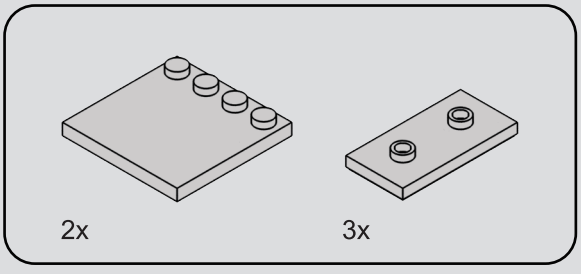

3

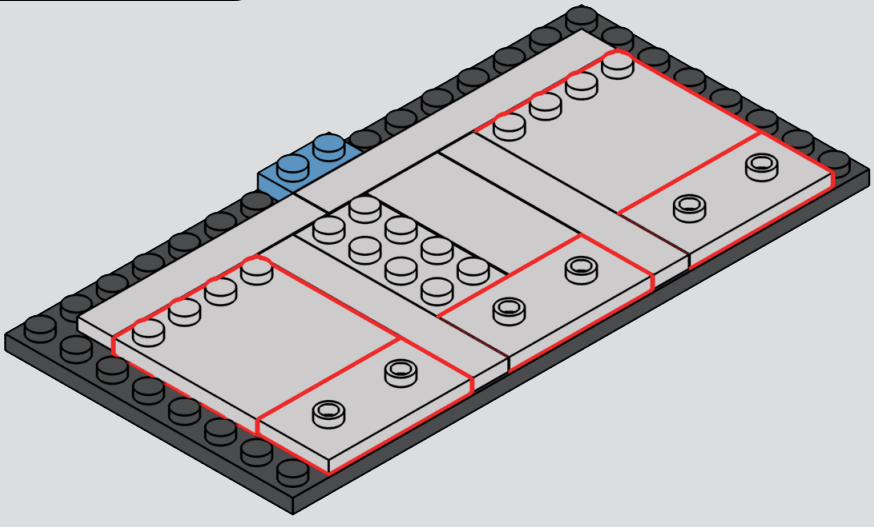

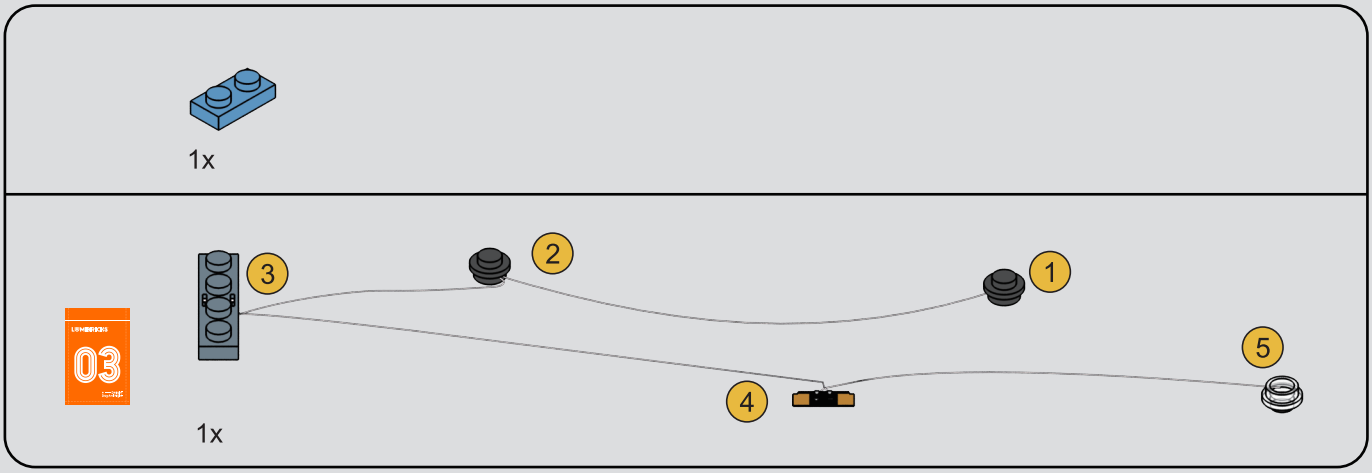

4

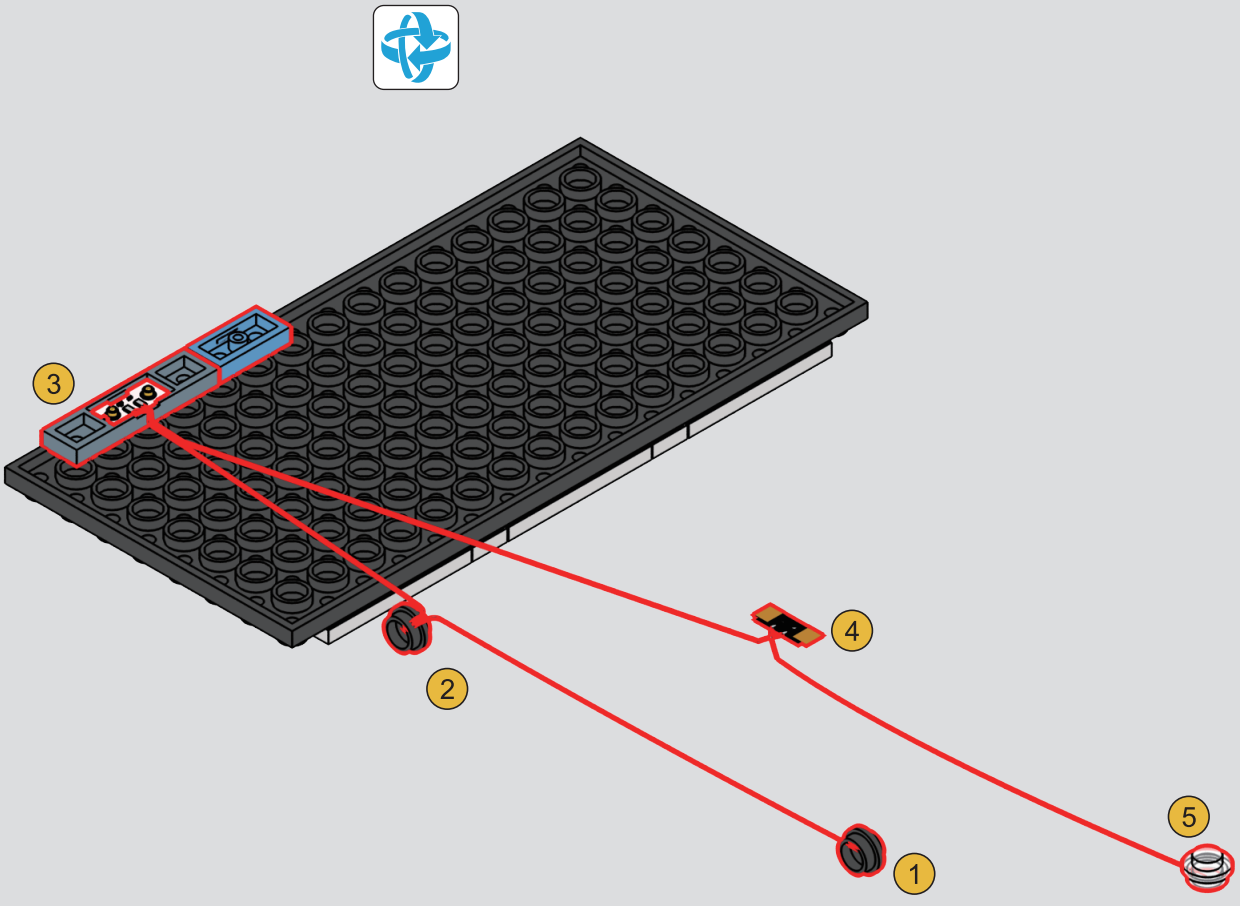

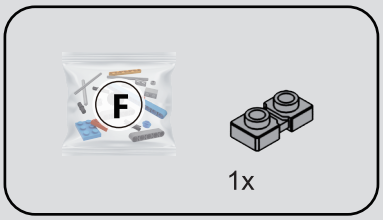

5

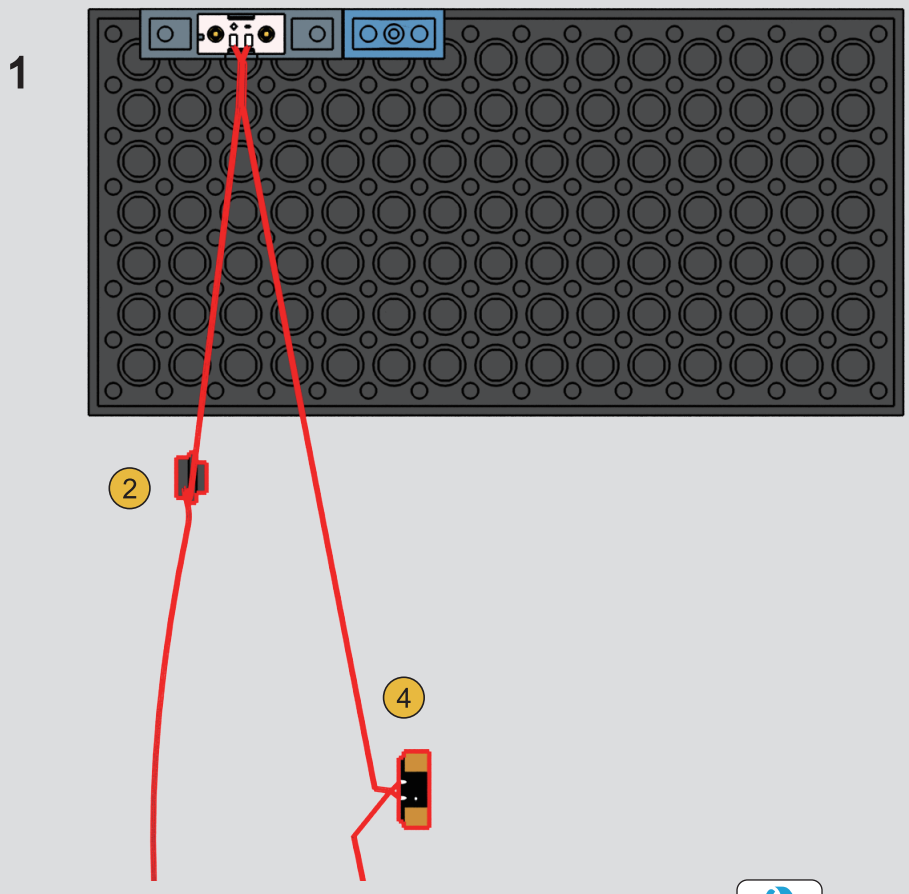

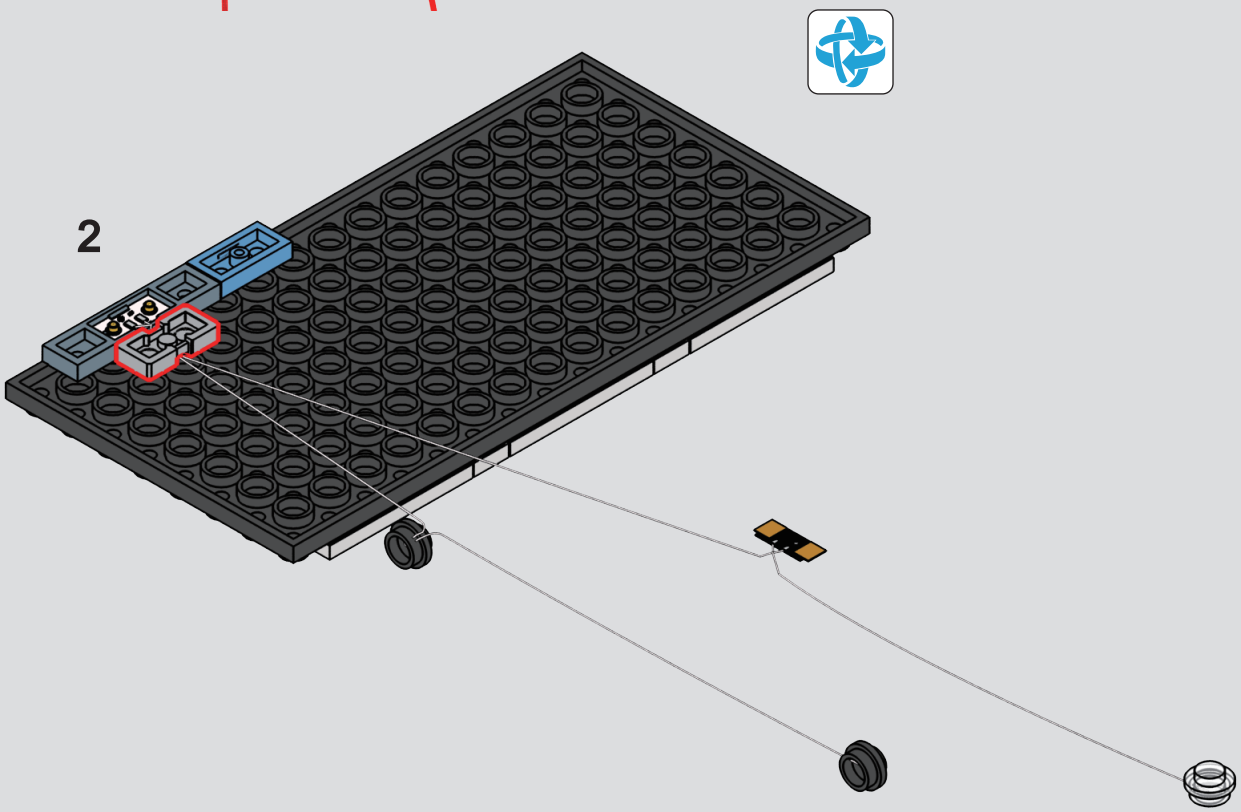

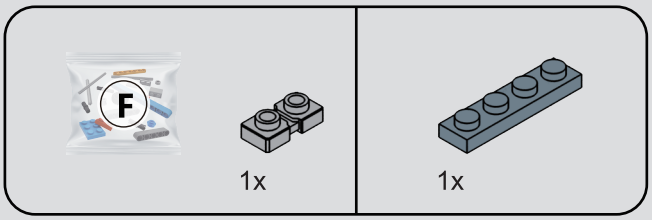

6

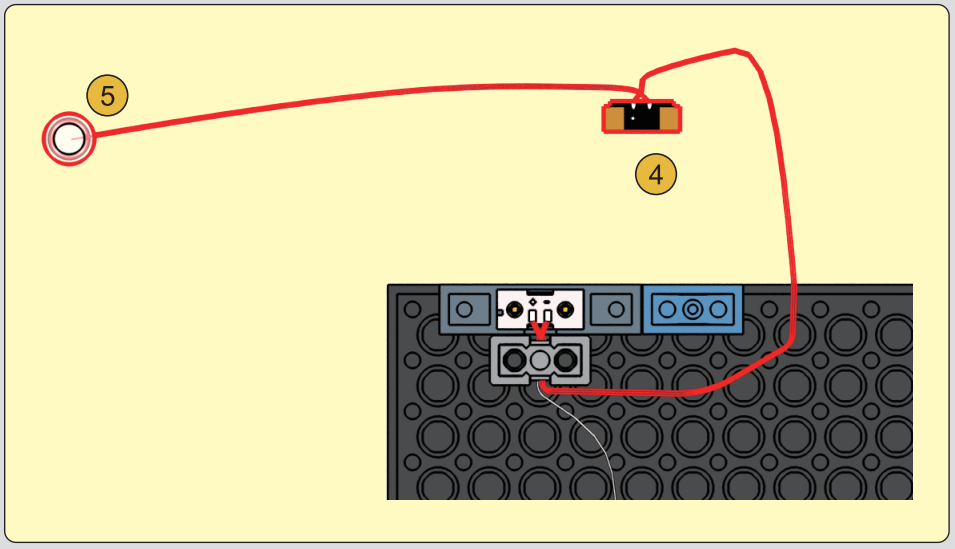

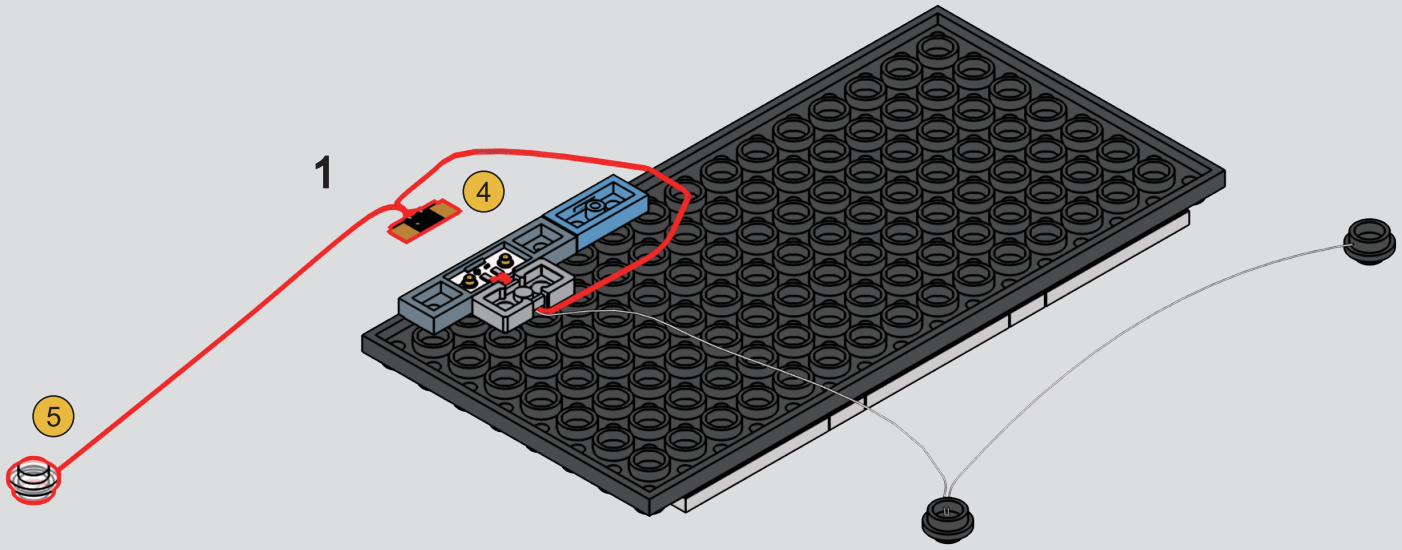

2

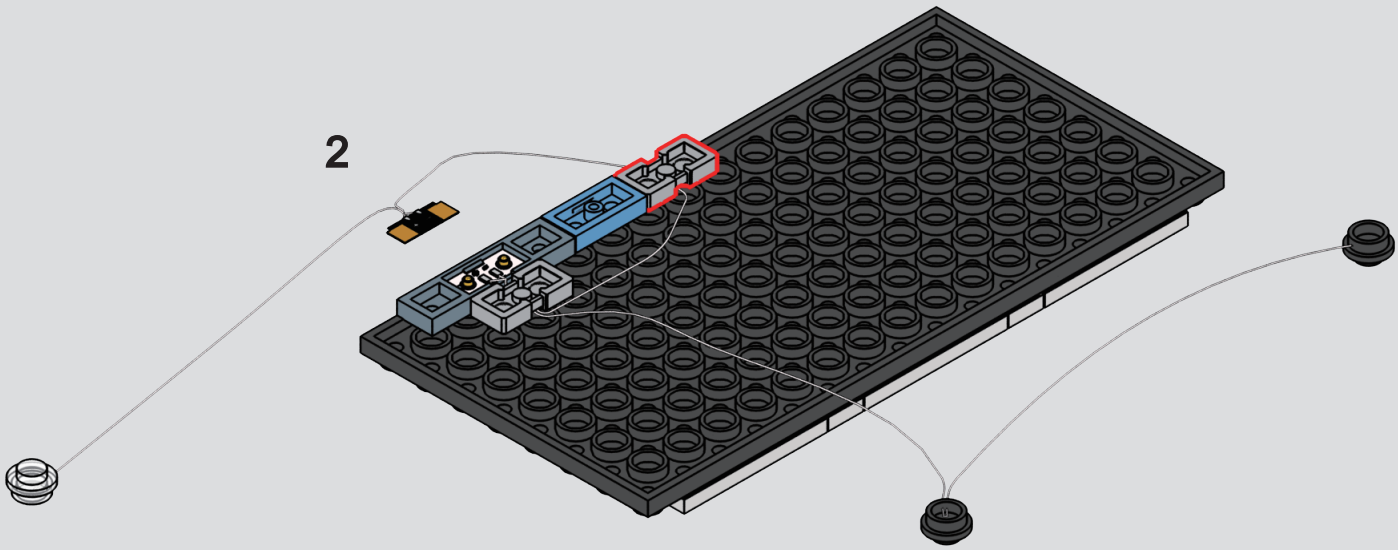

3

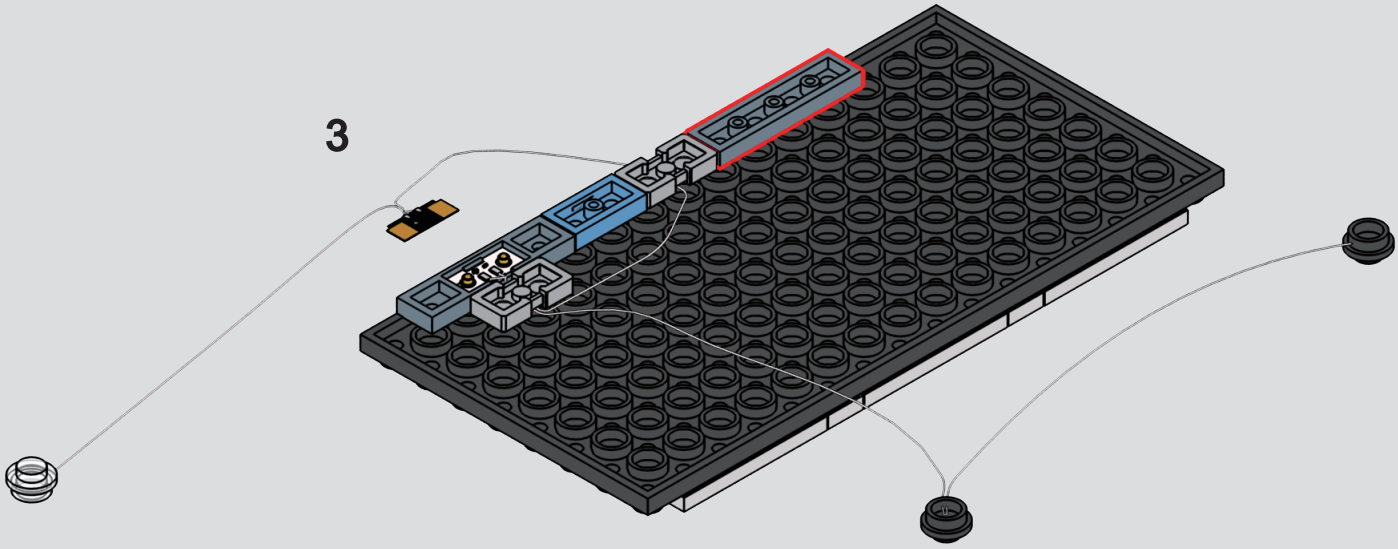

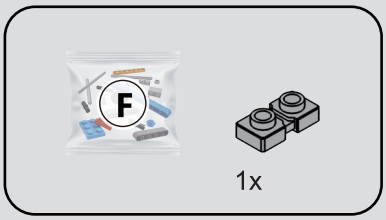

7

1

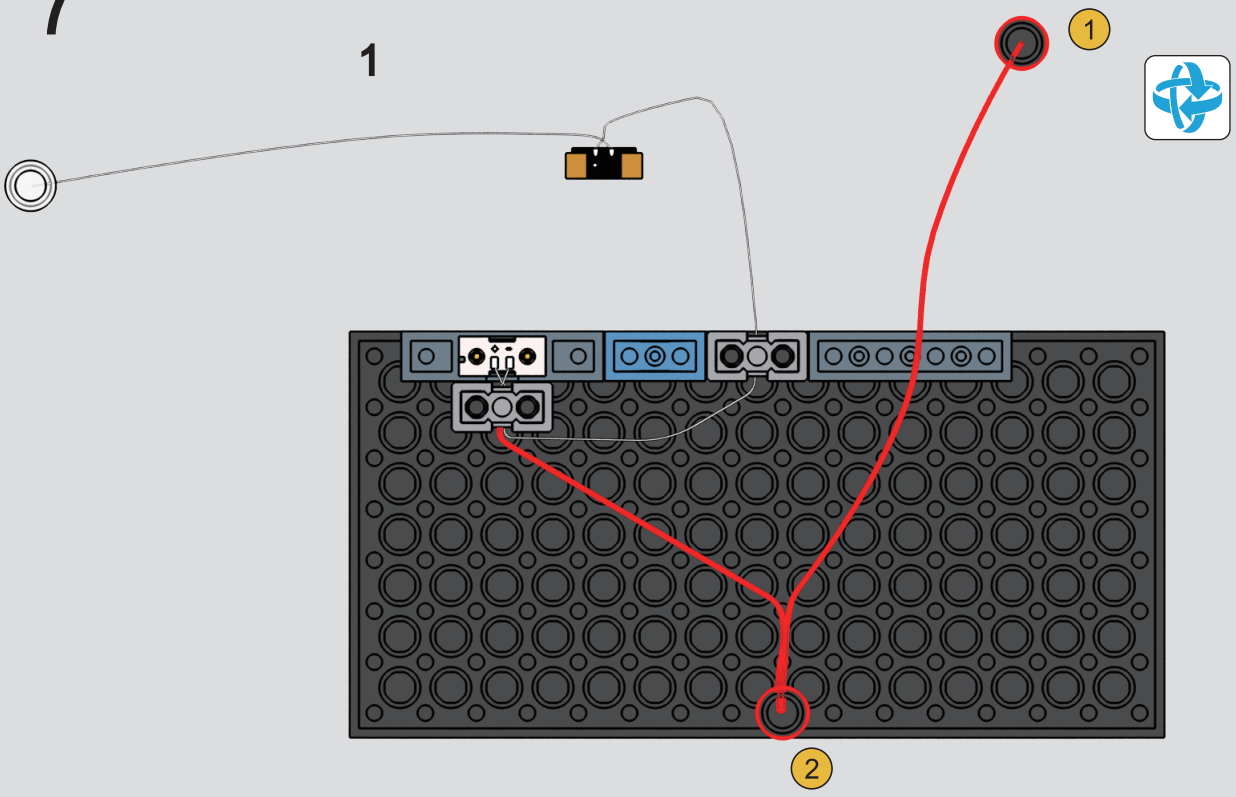

2

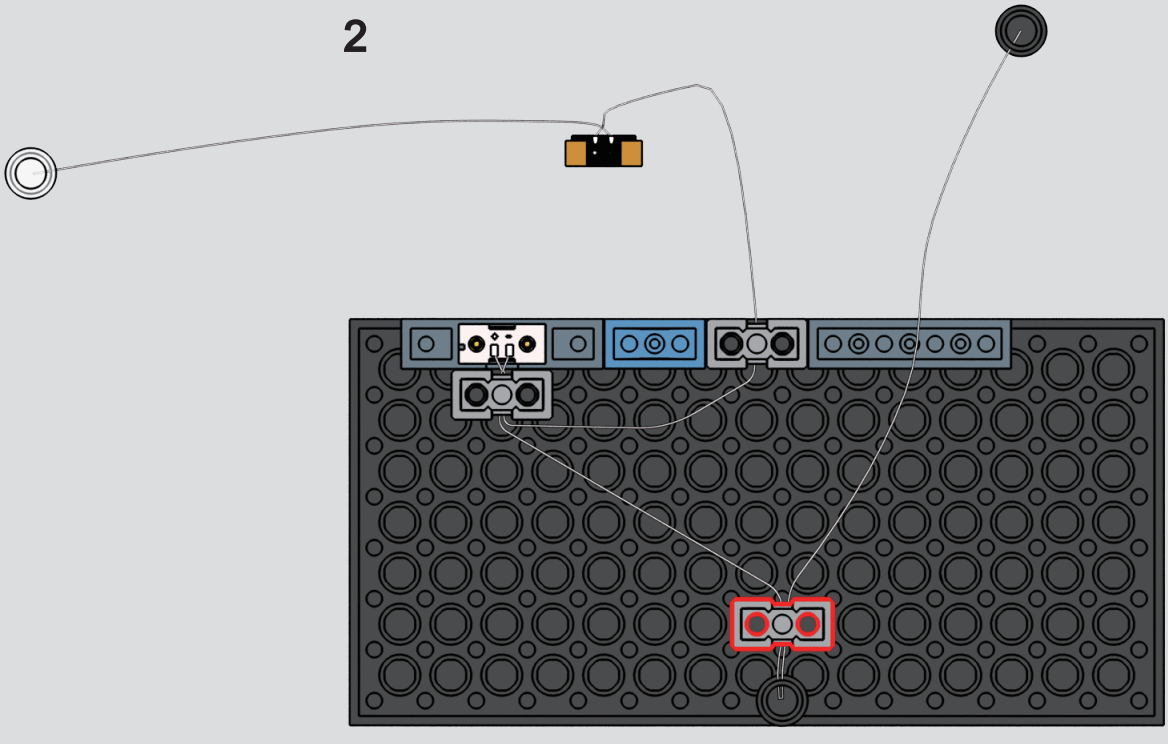

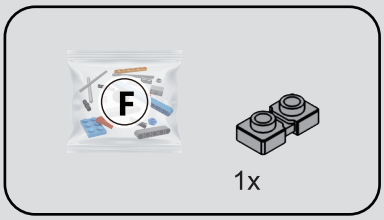

8

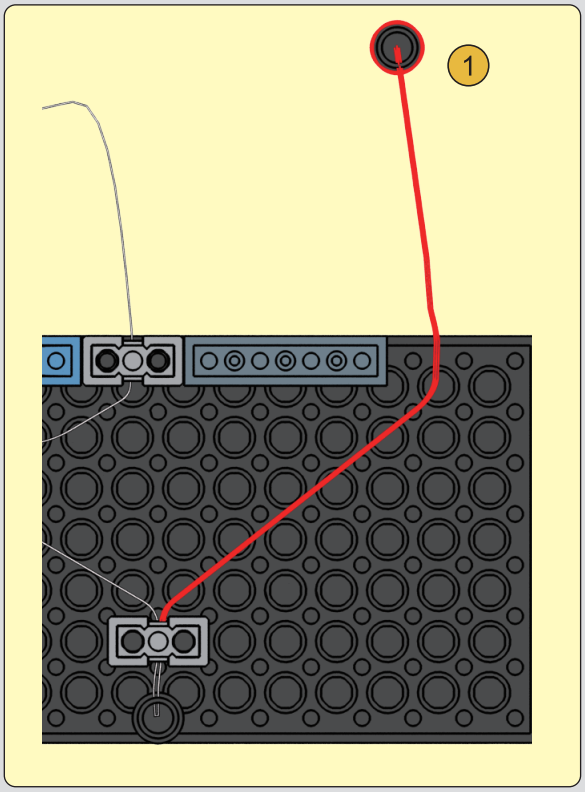

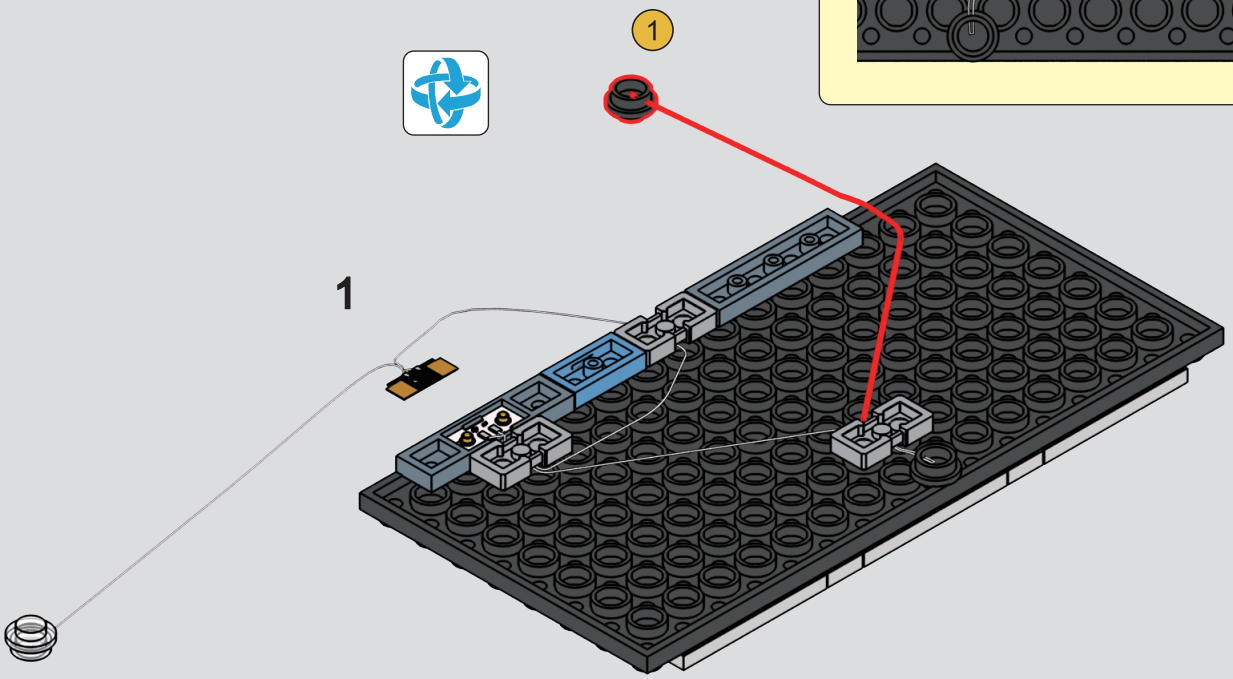

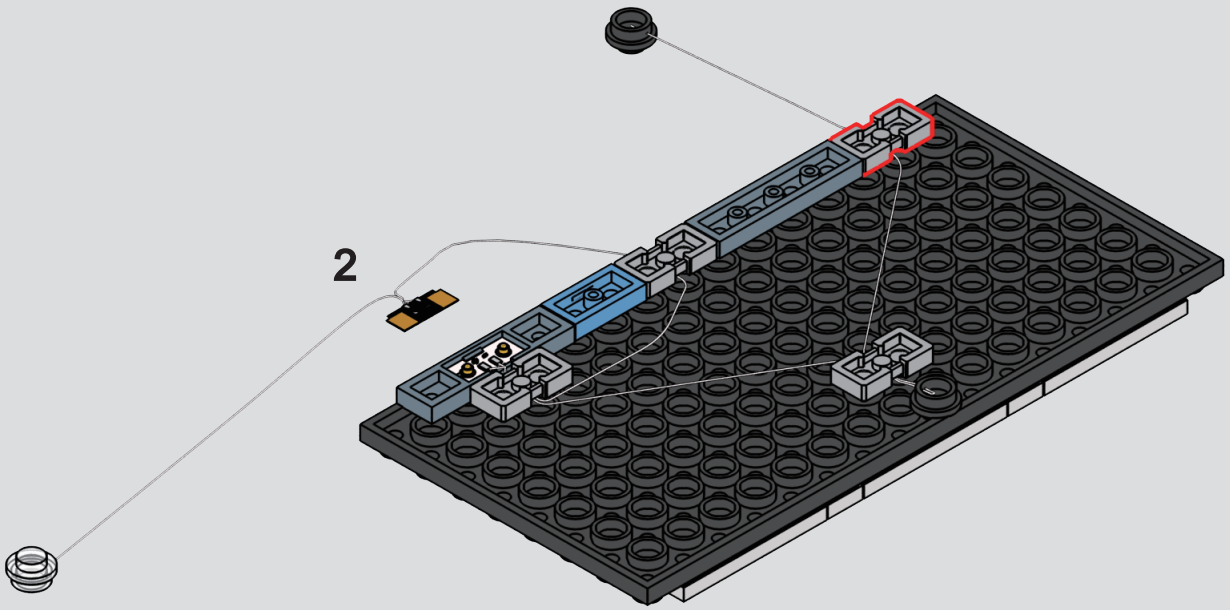

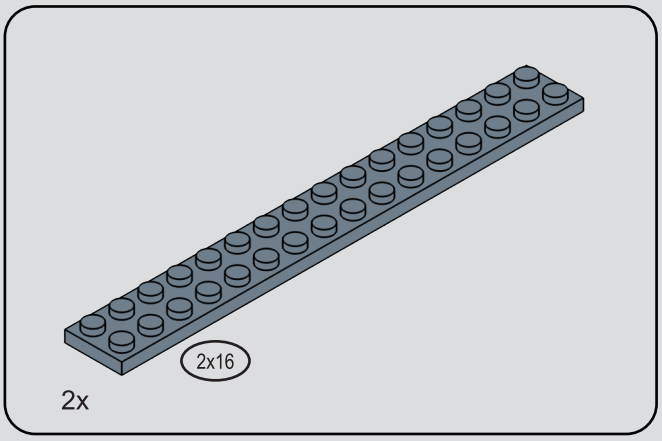

9

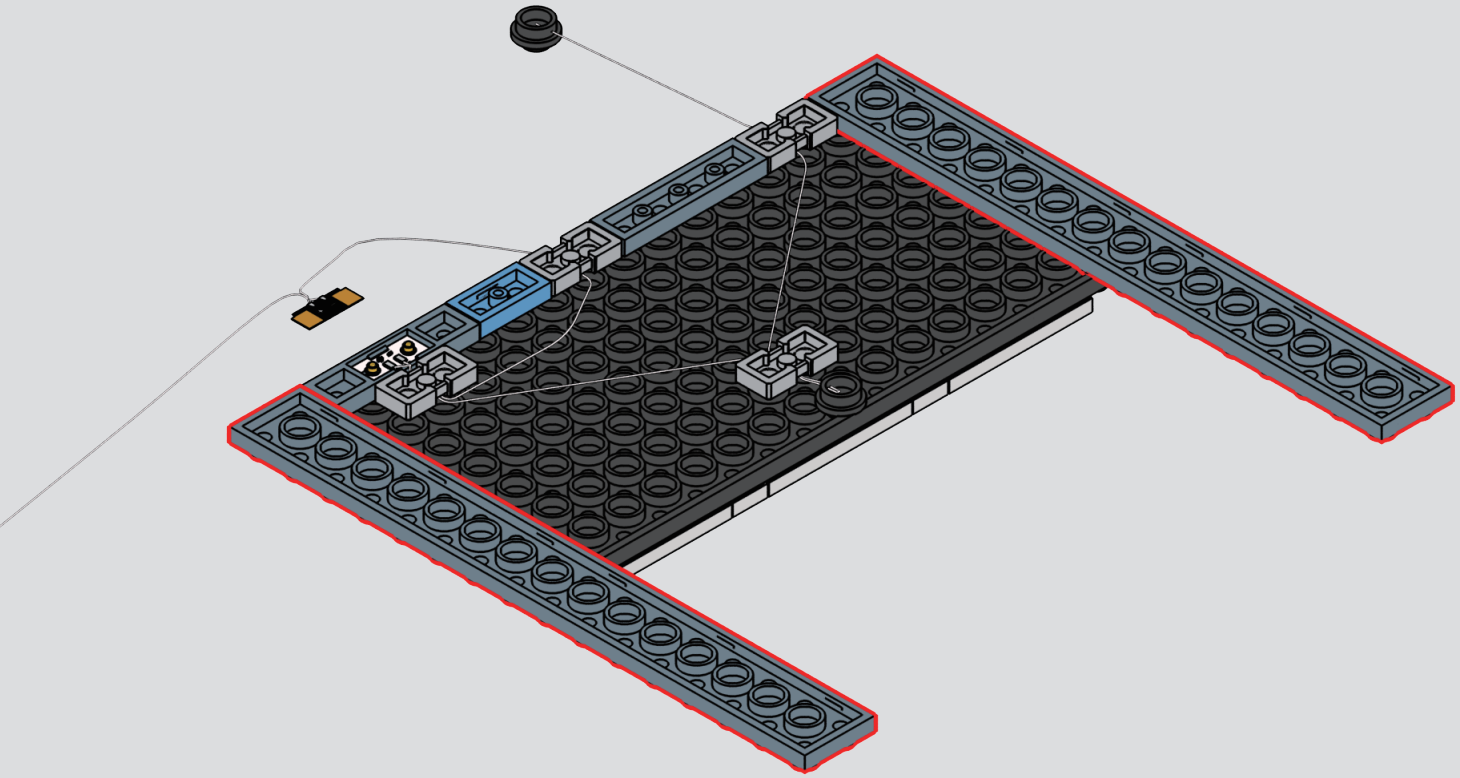

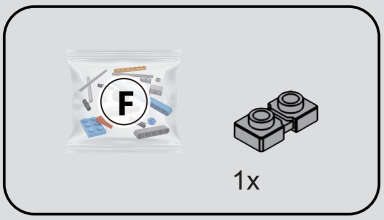

10

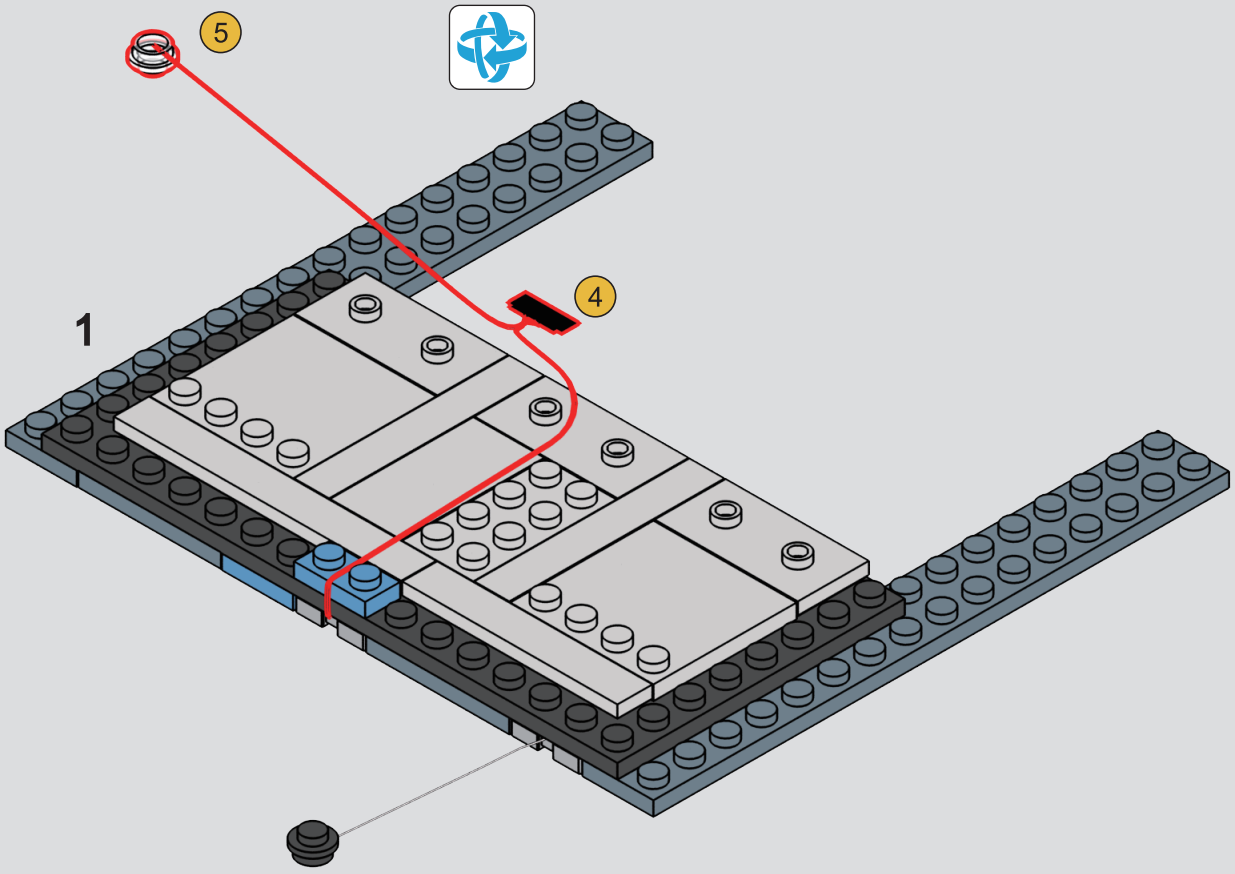

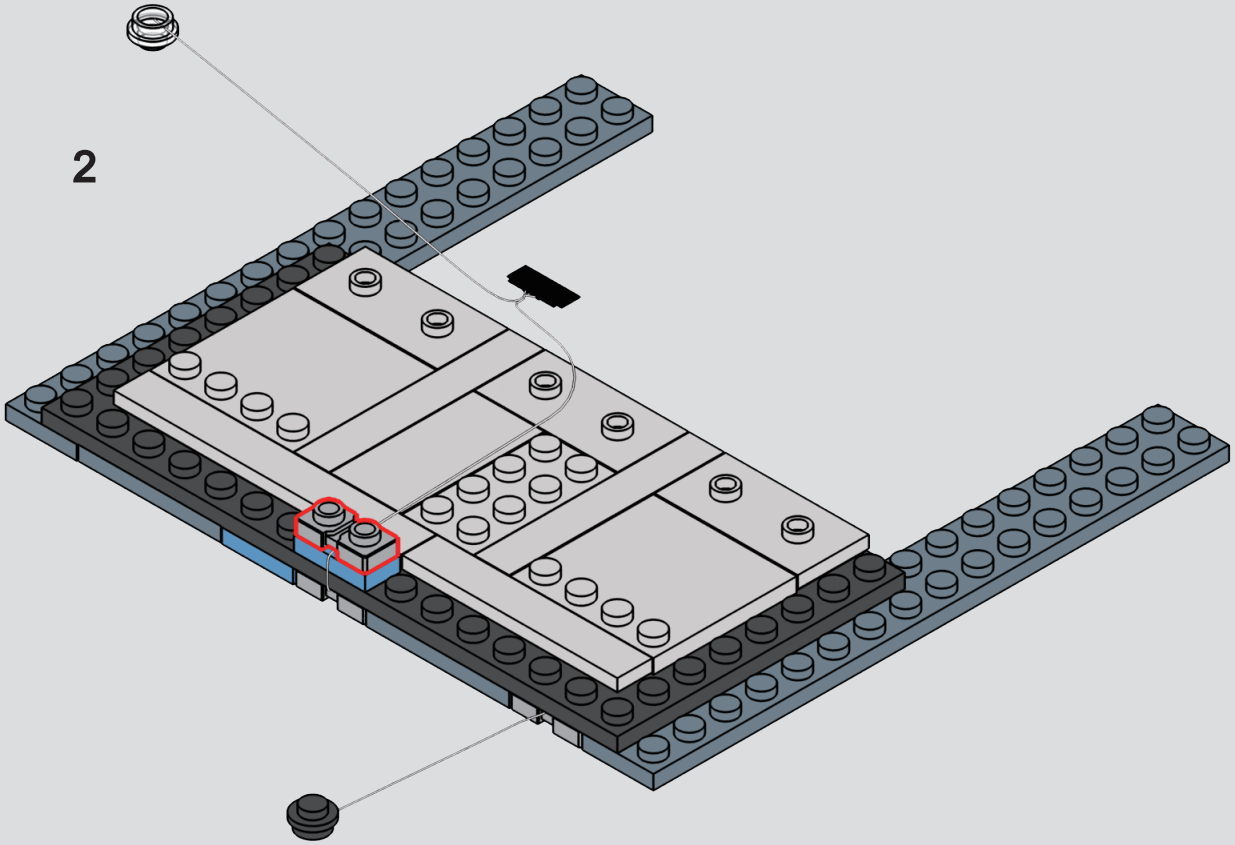

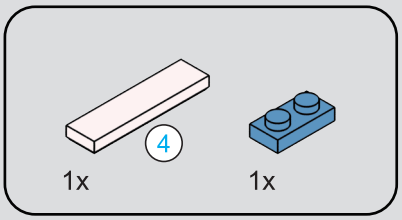

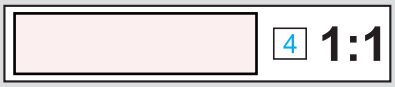

11

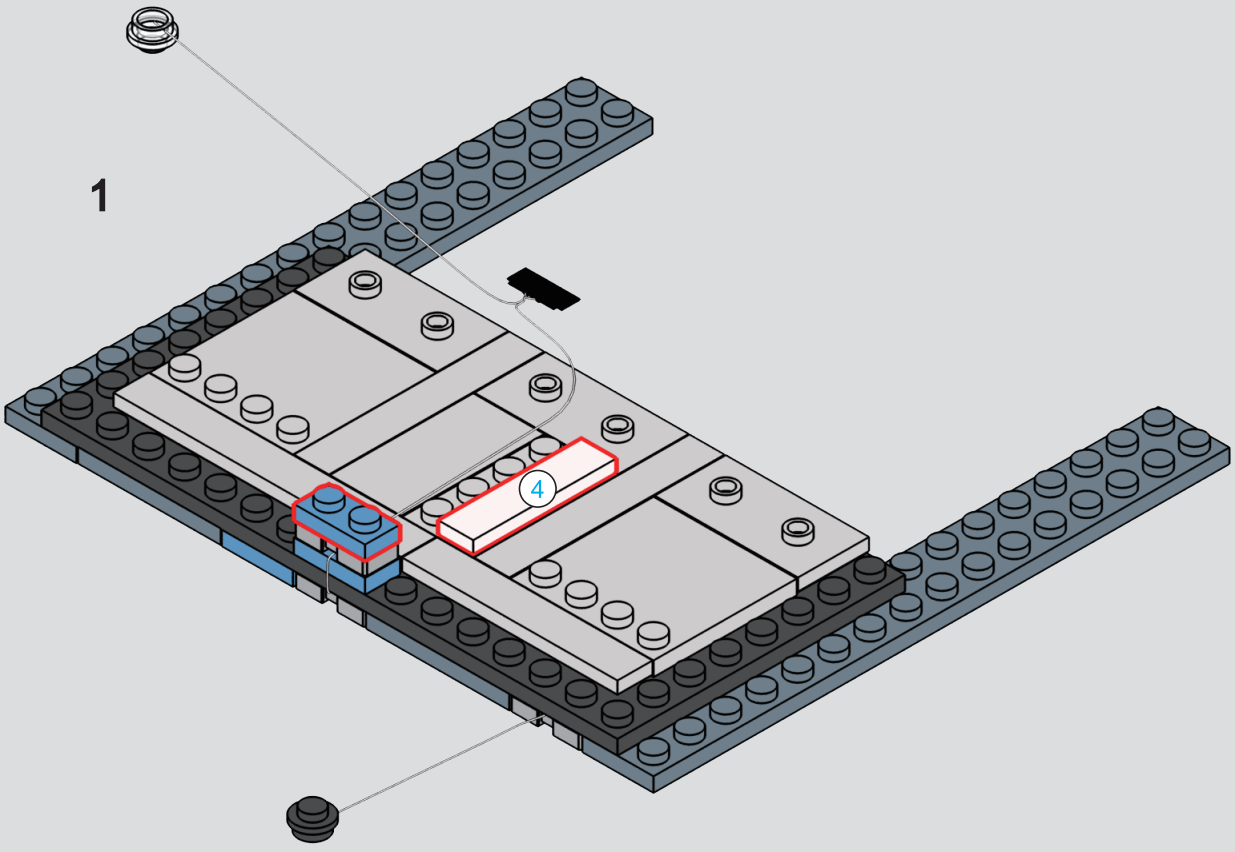

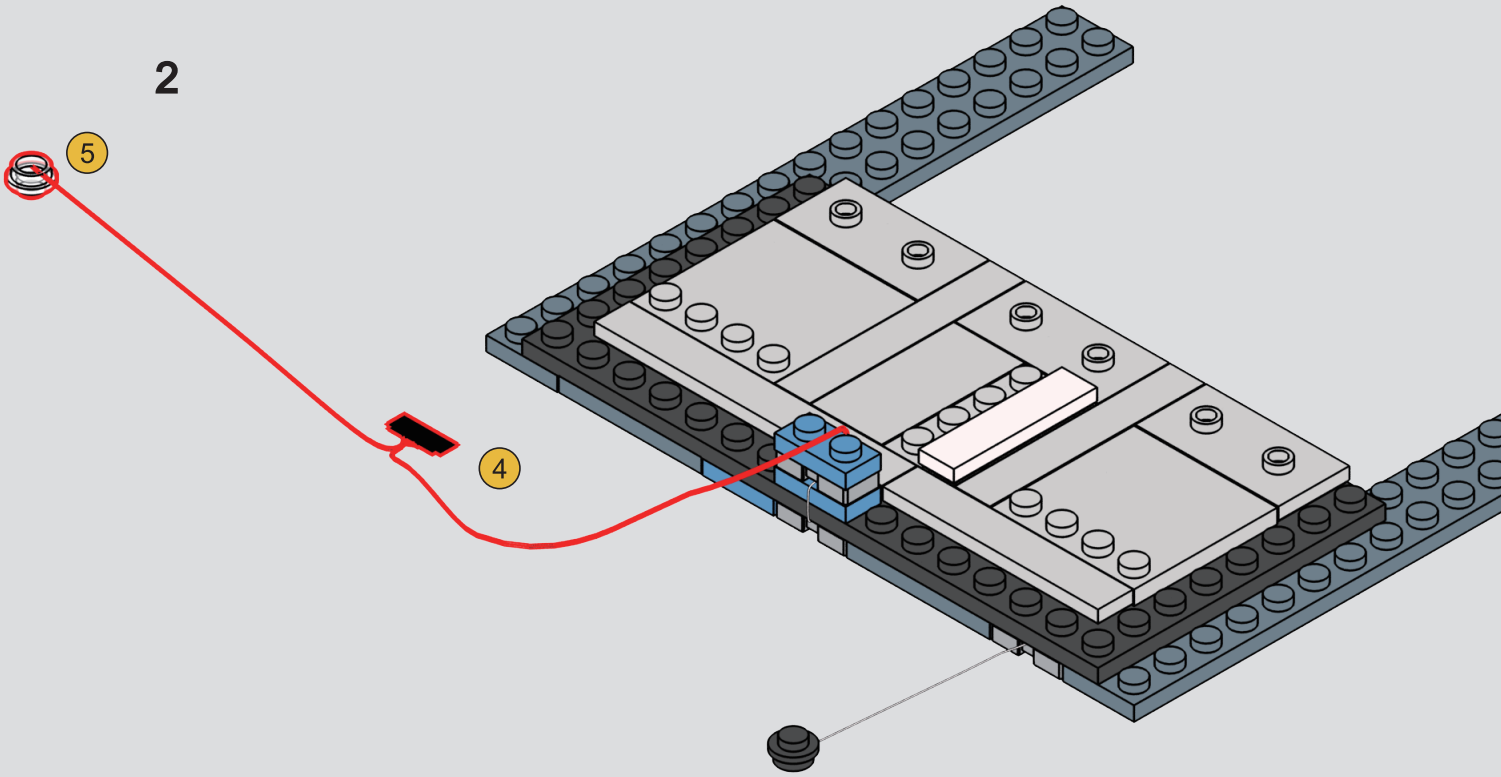

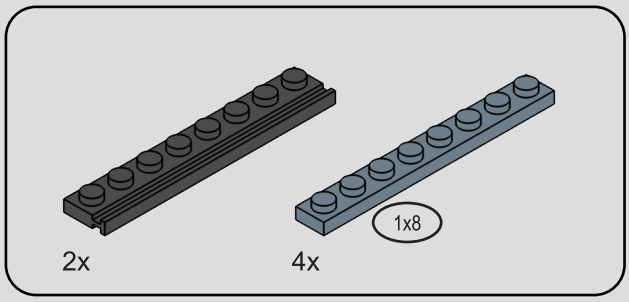

12

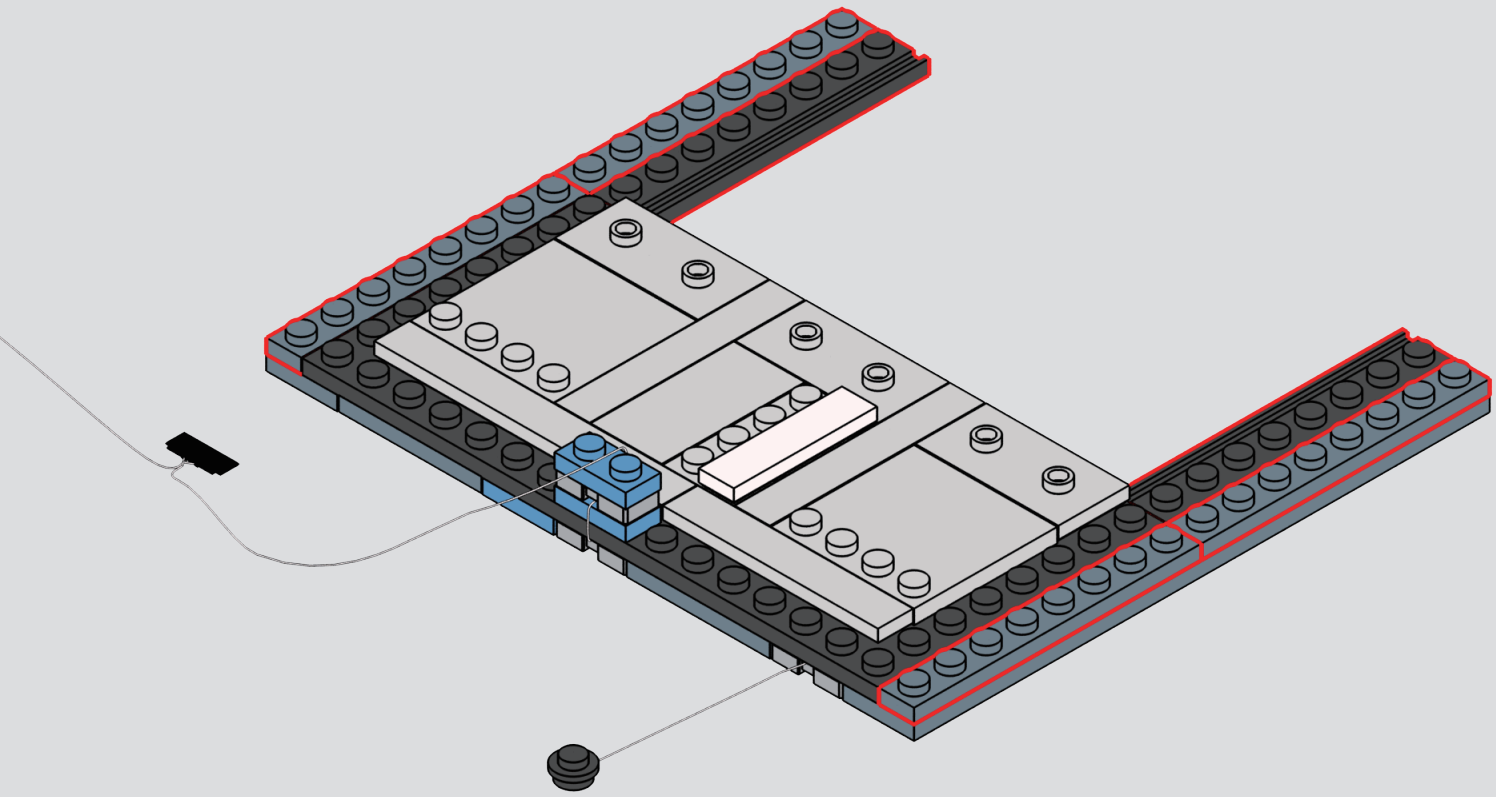

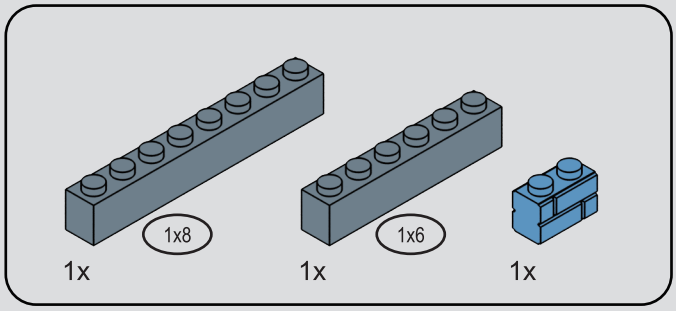

13

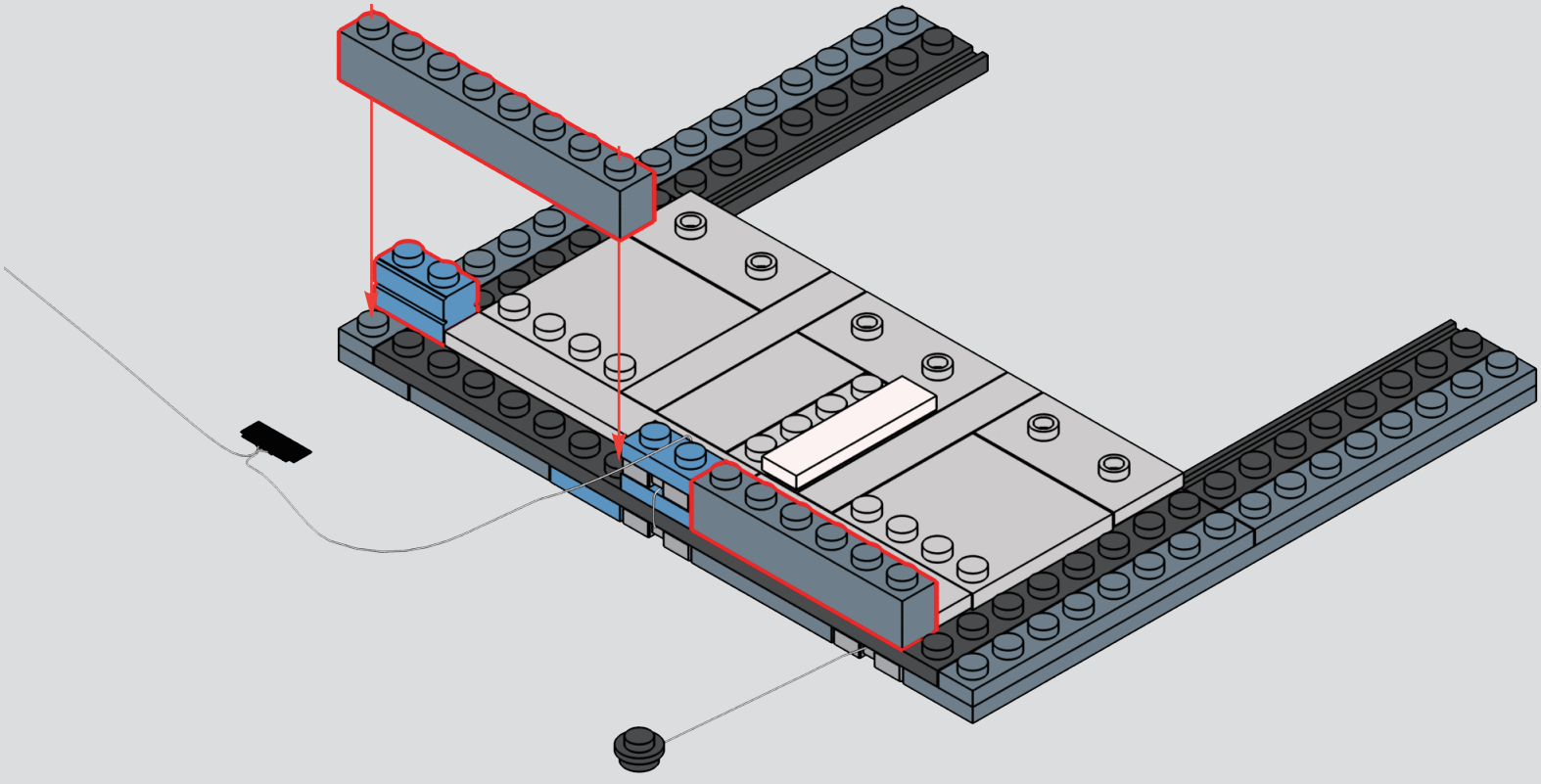

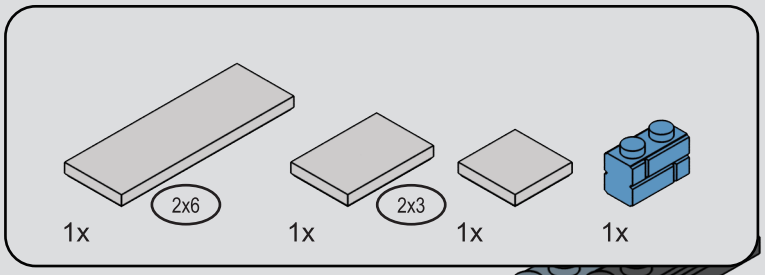

14

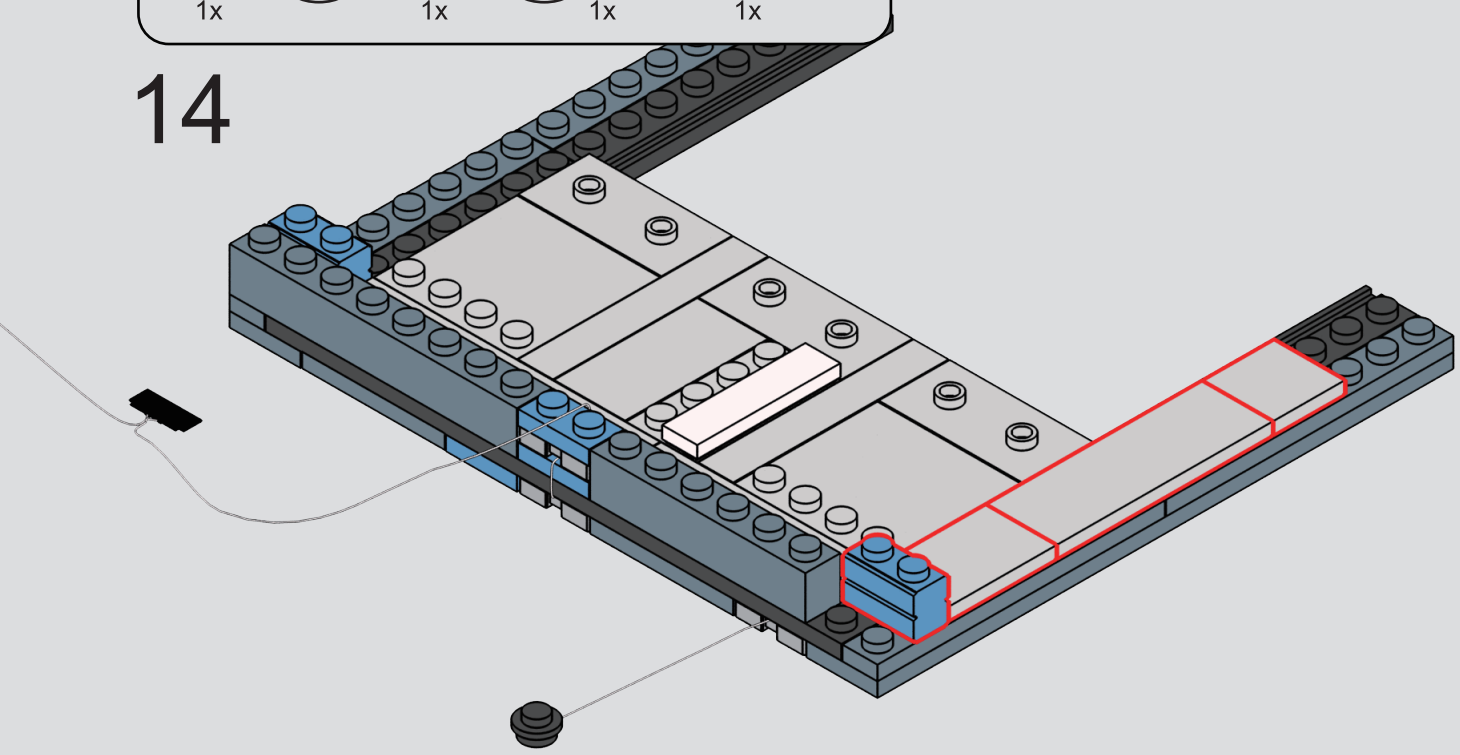

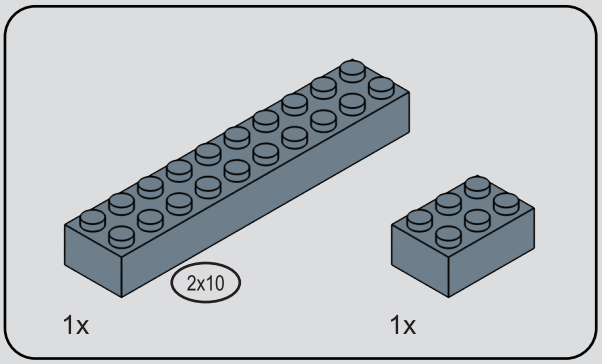

15

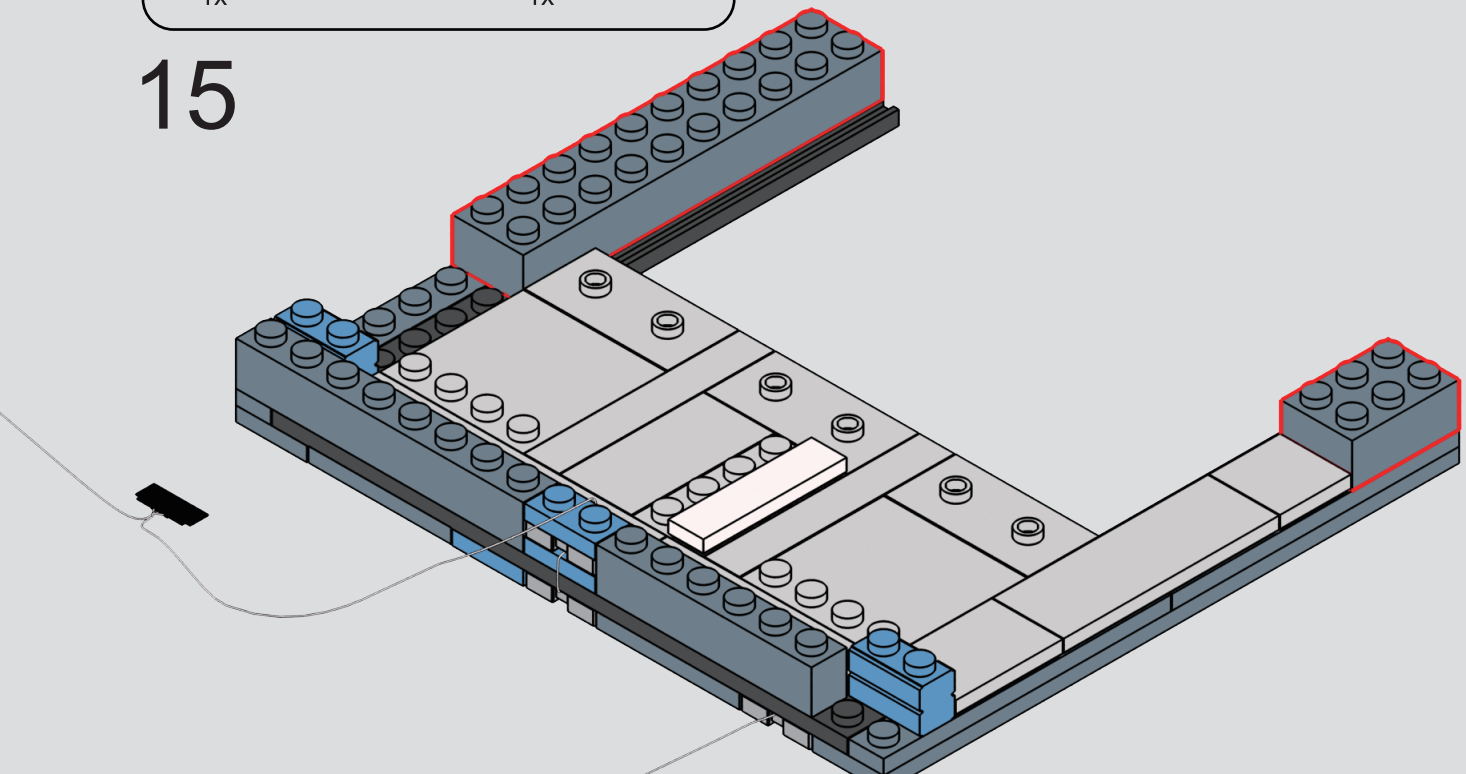

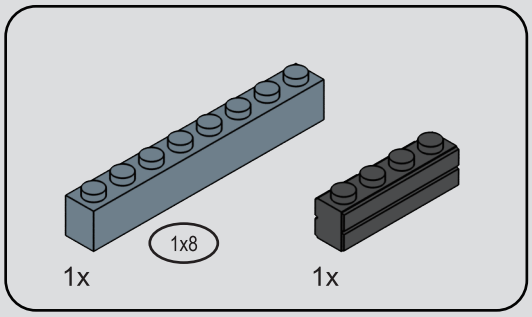

16

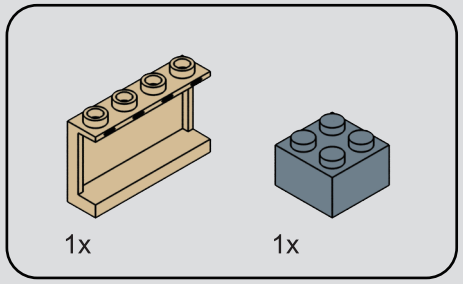

17

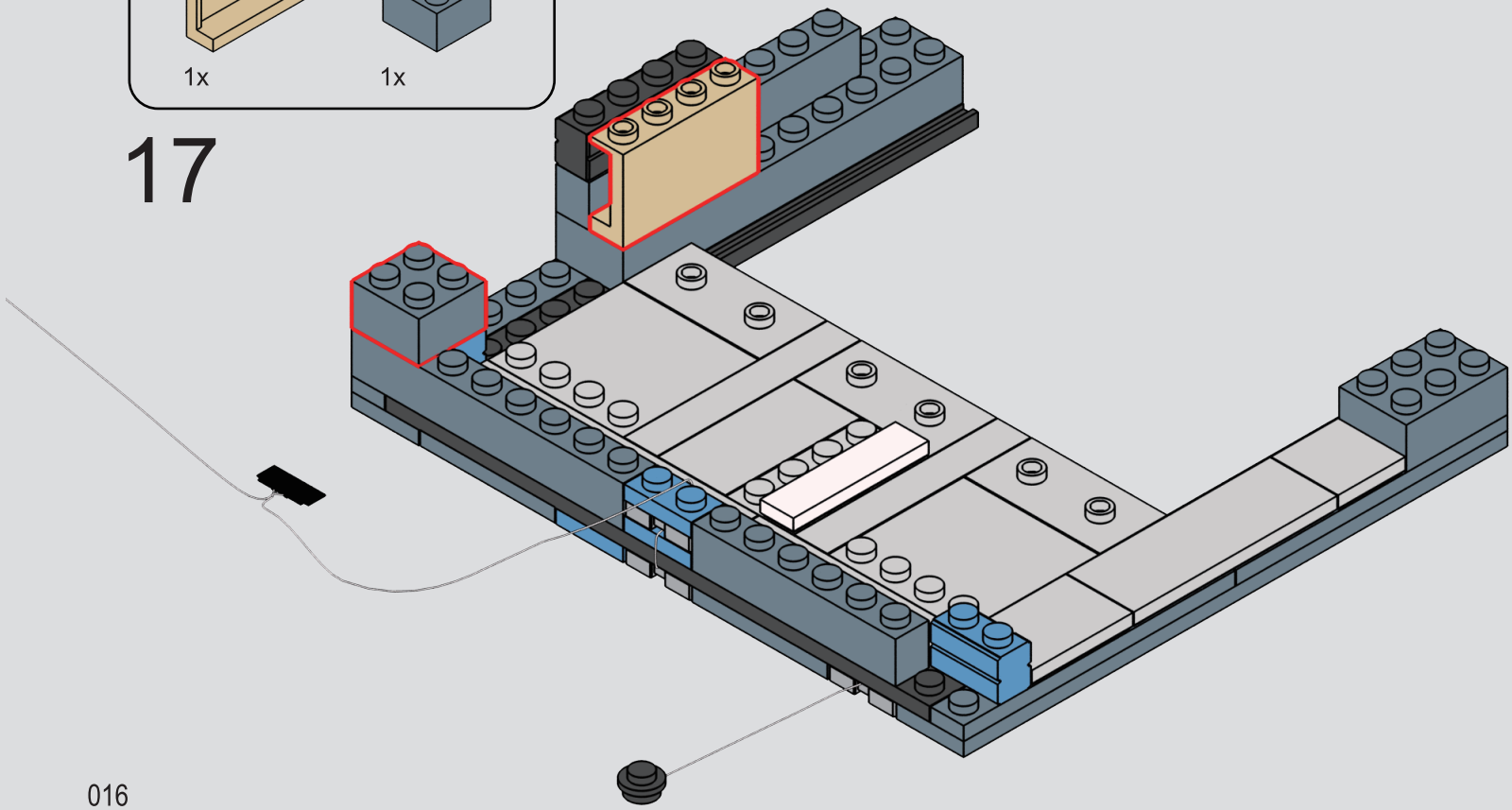

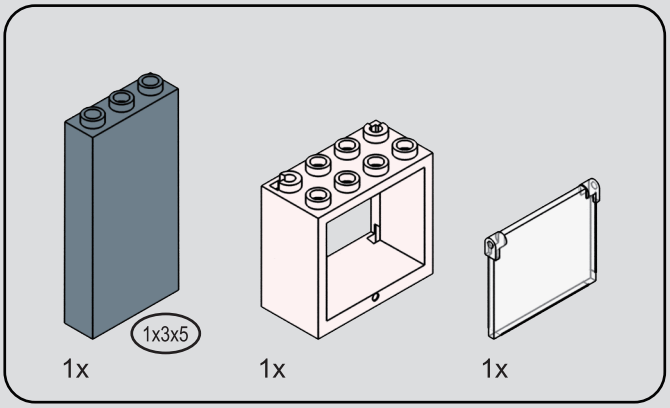

18

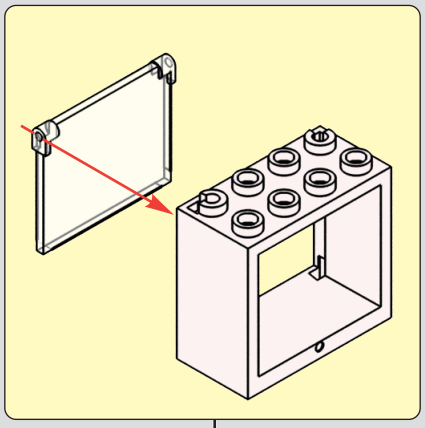

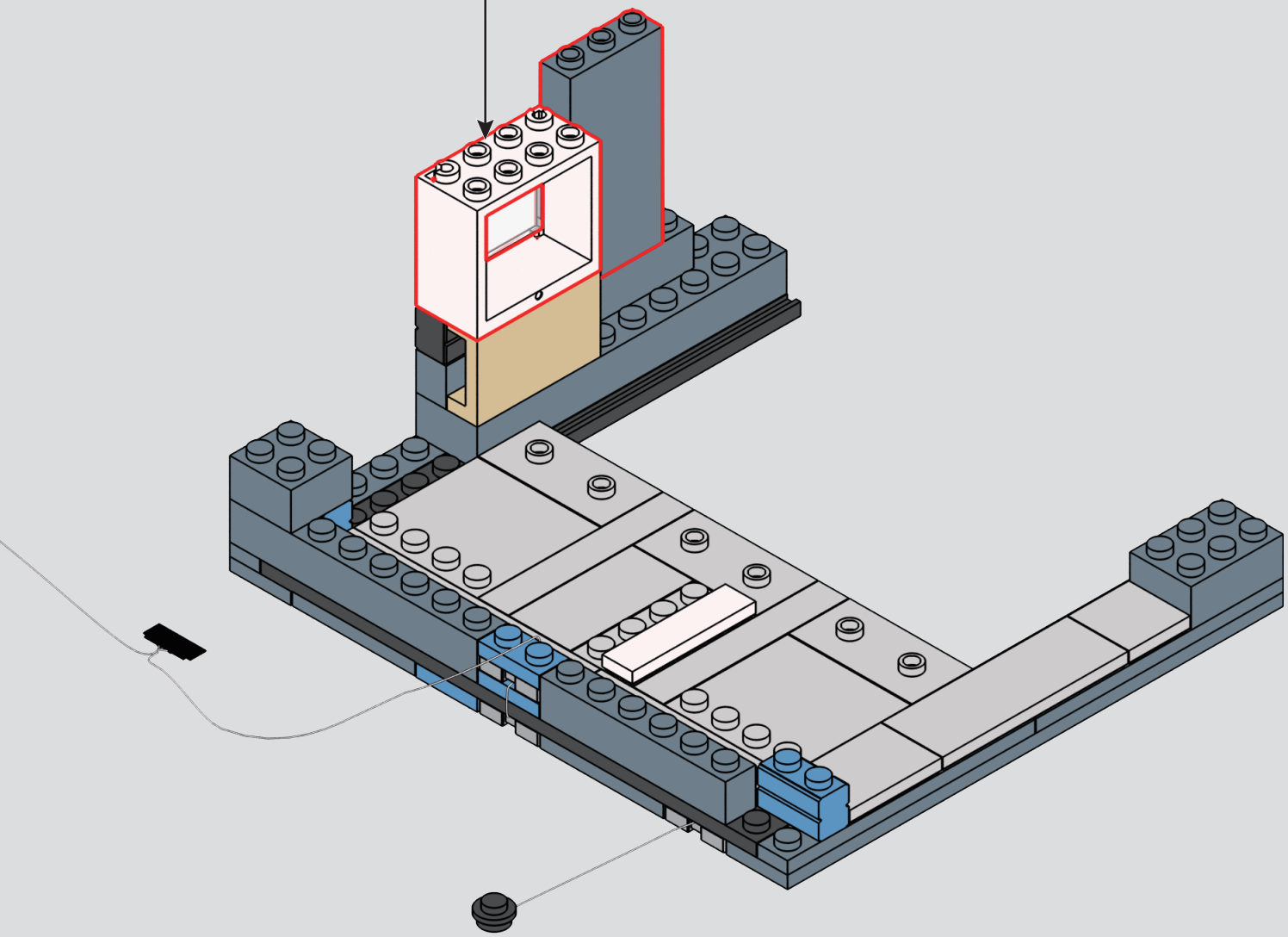

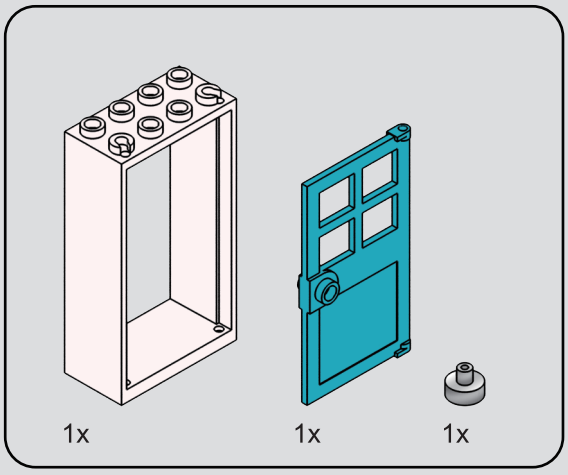

19

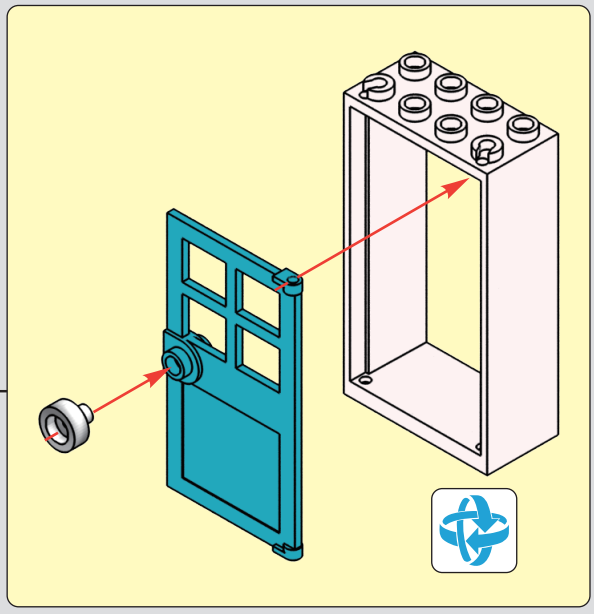

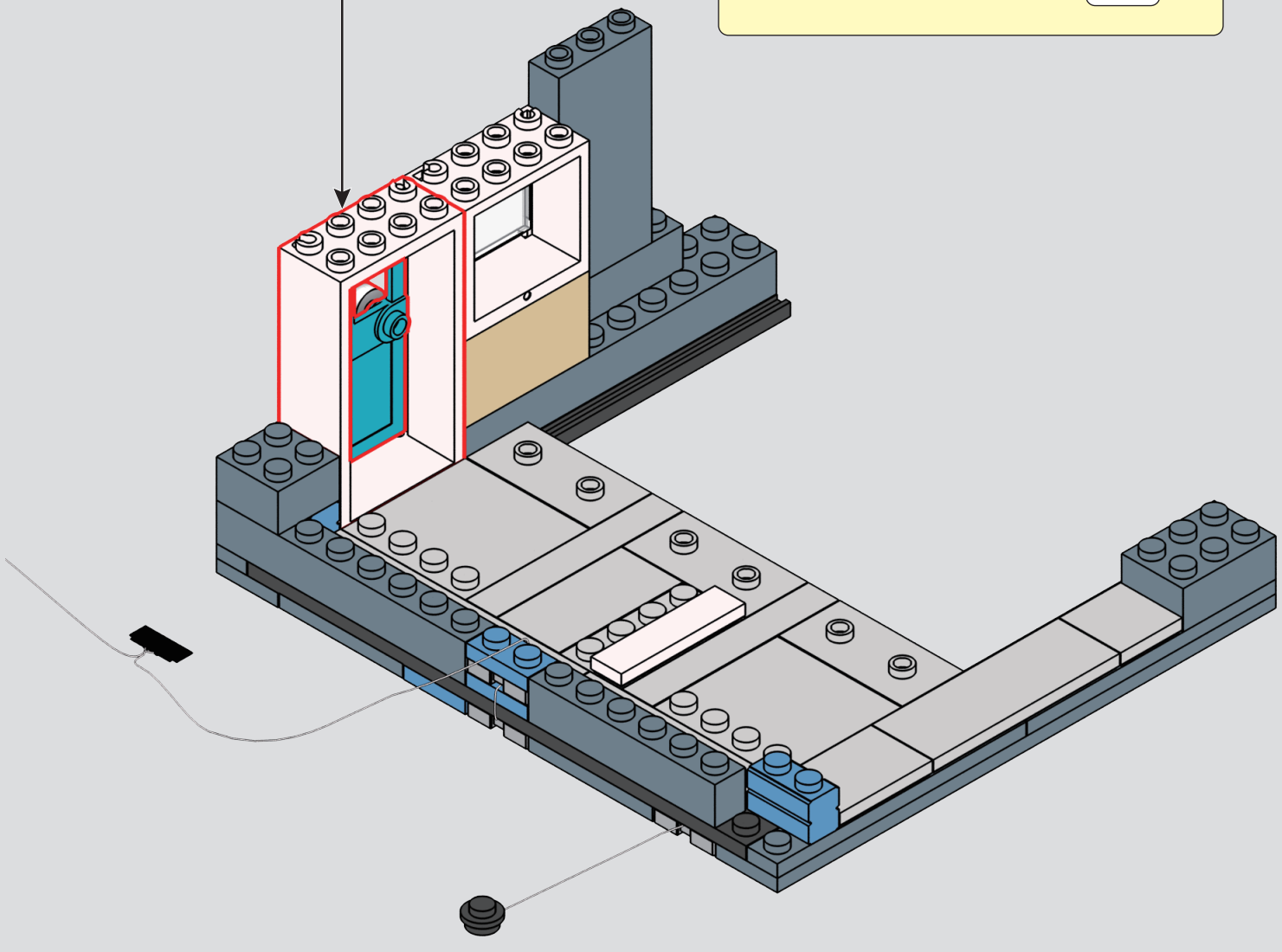

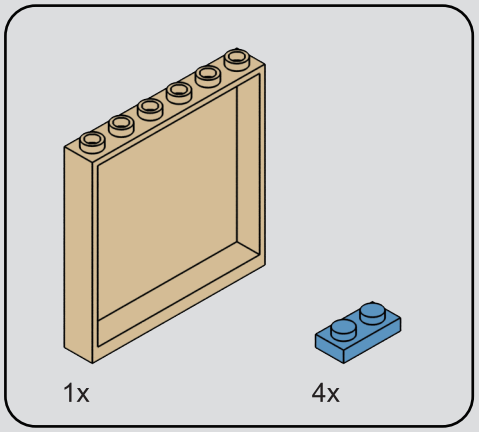

20

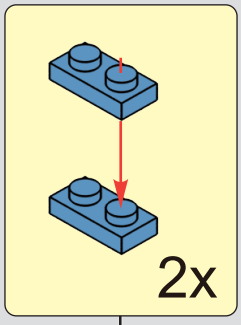

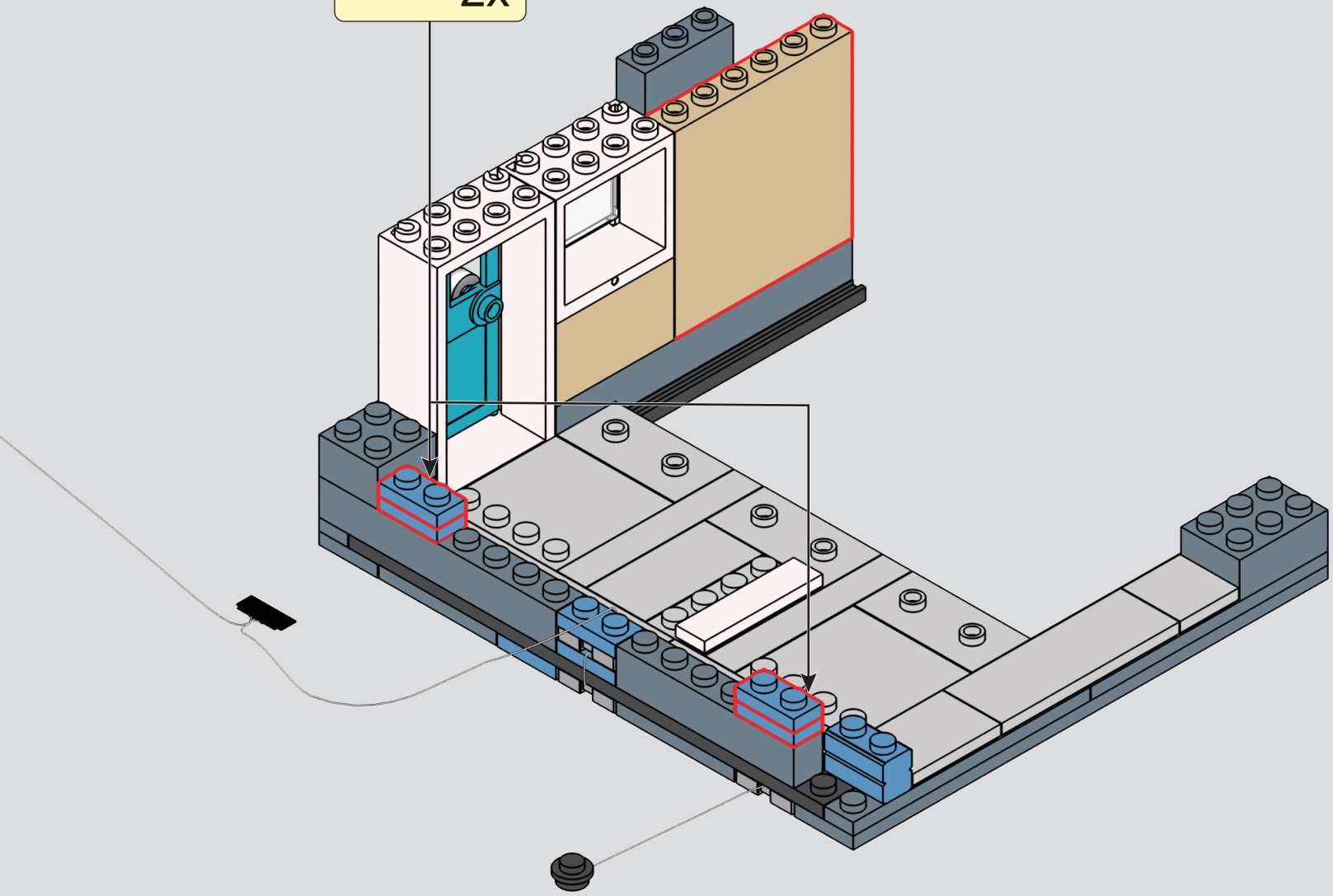

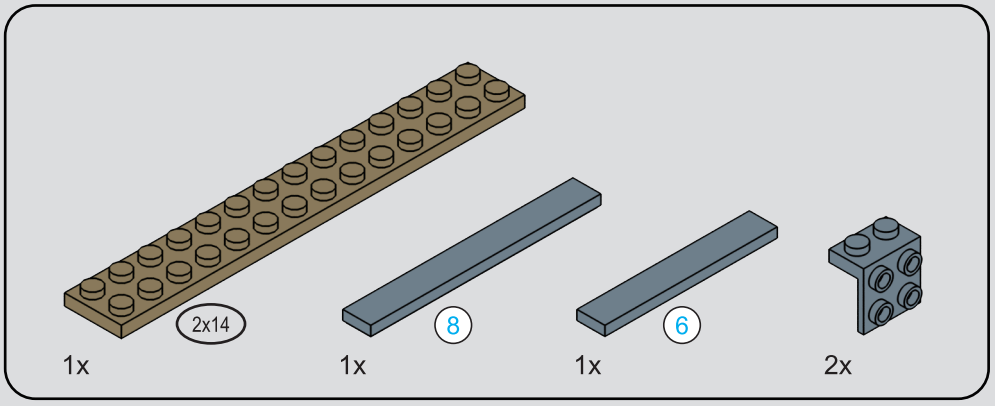

21

1

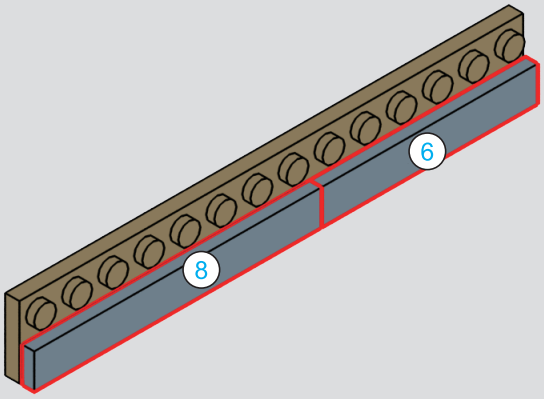

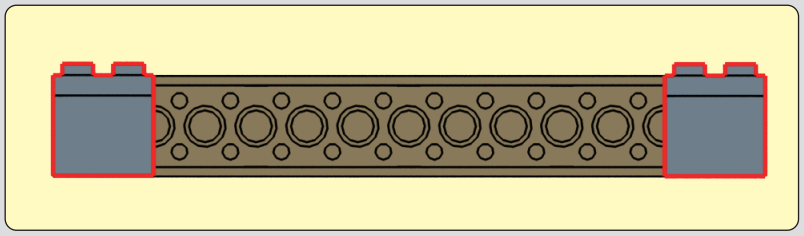

2

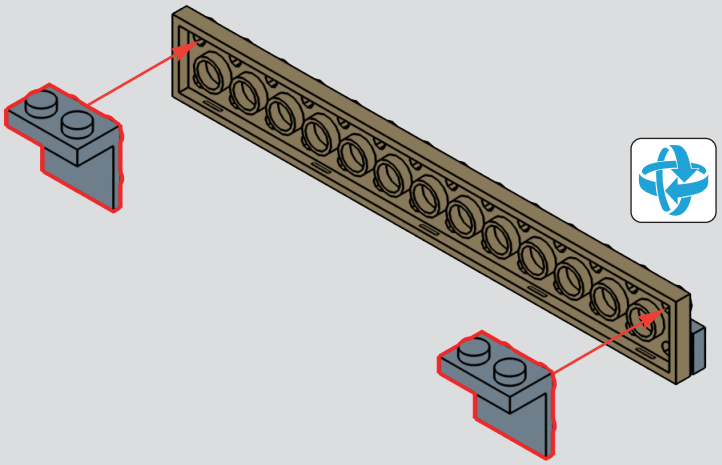



22

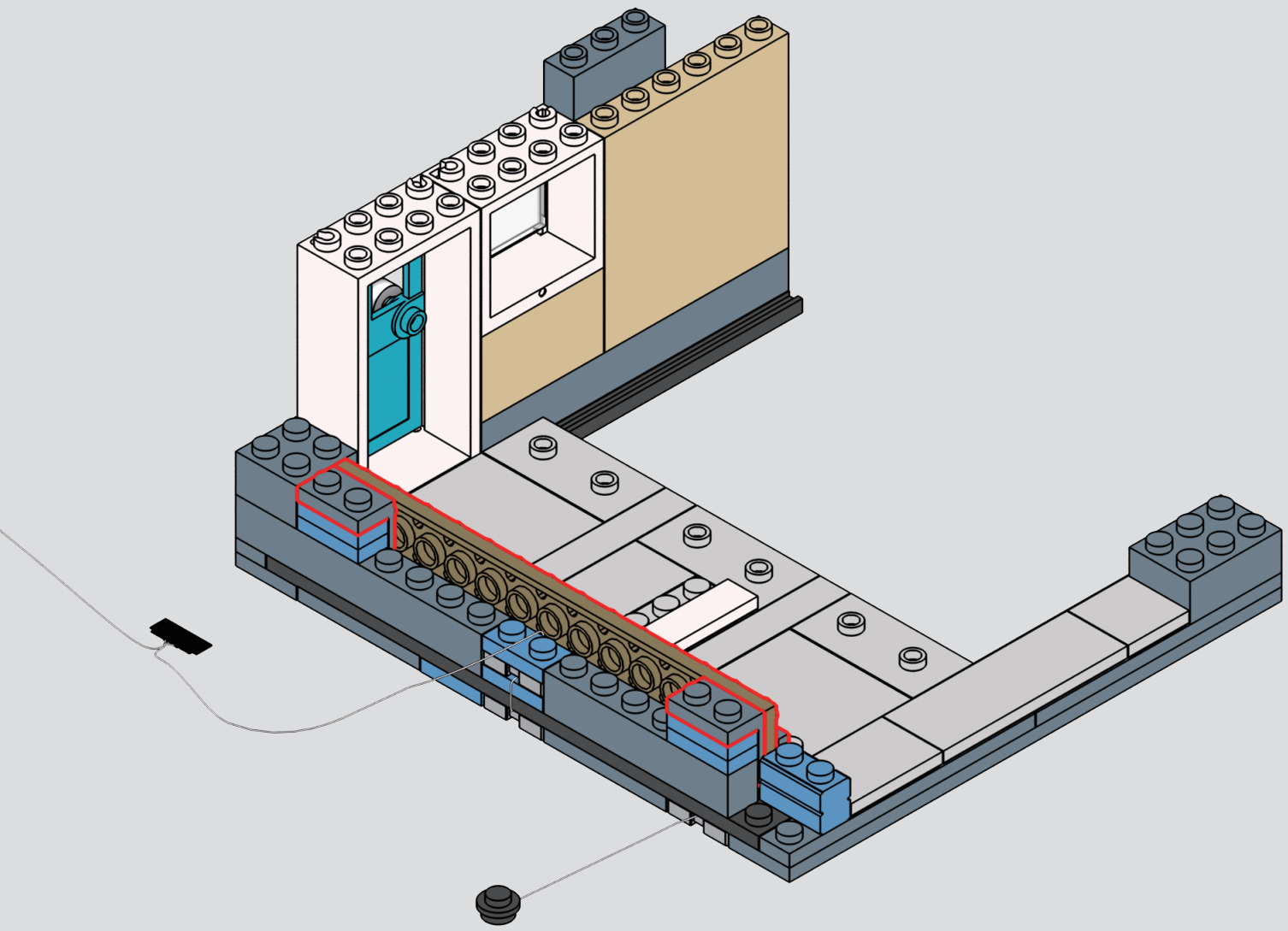

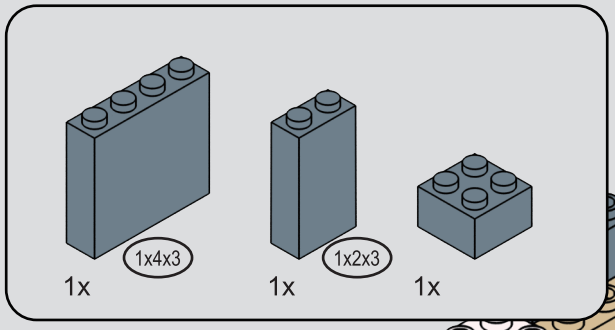

23

1

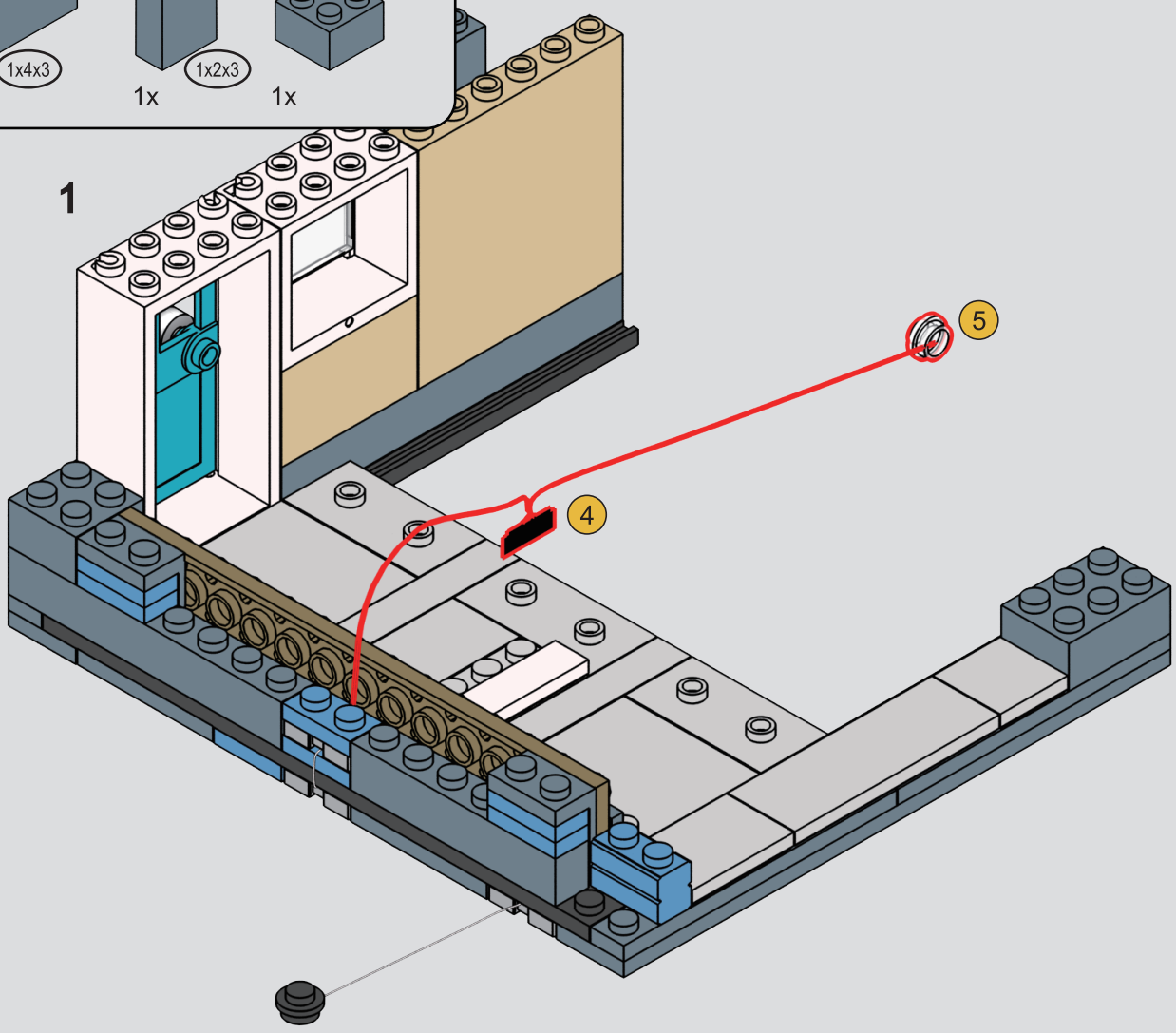

2

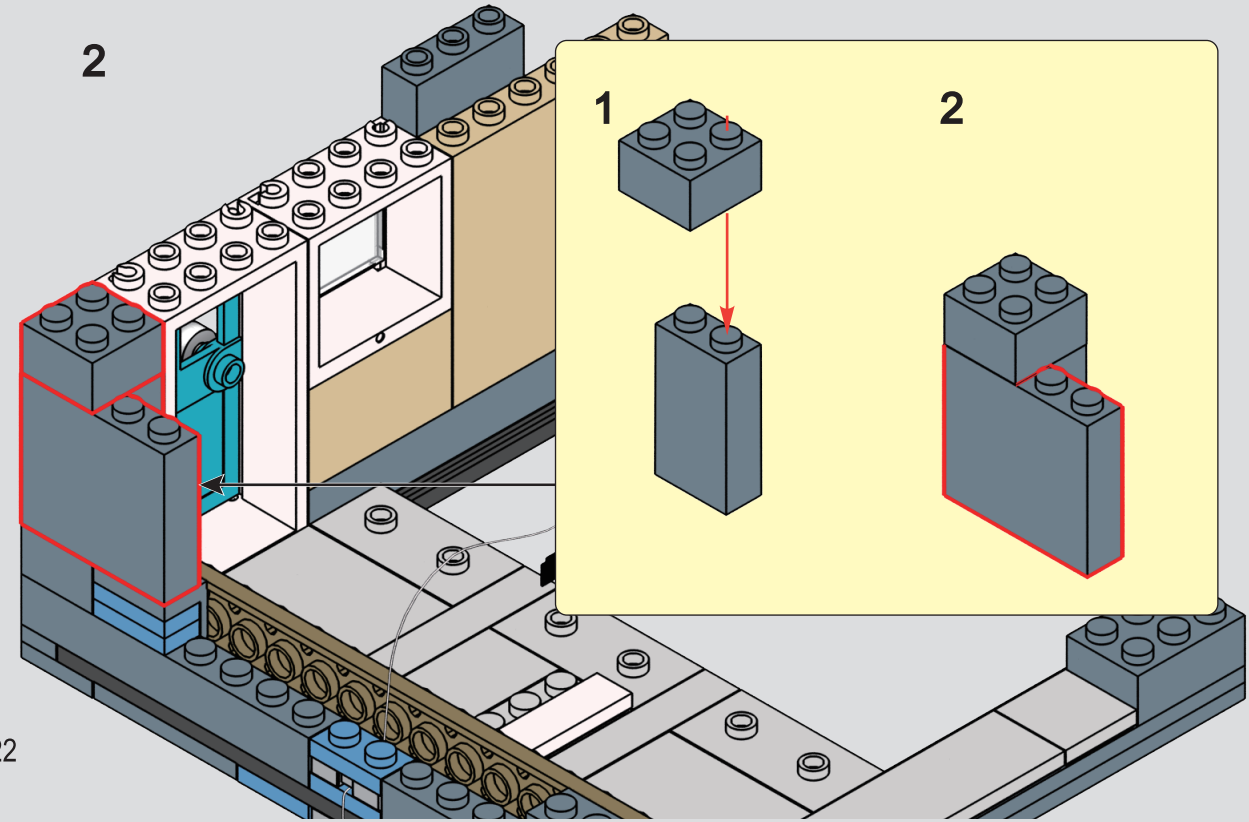

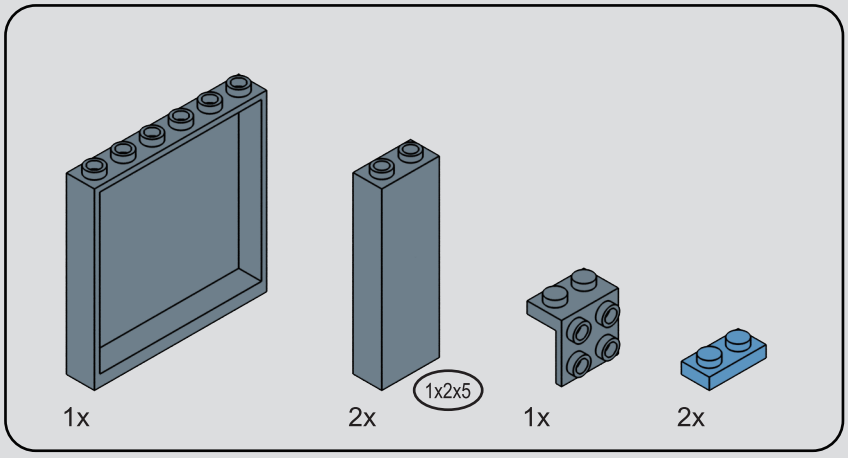

24

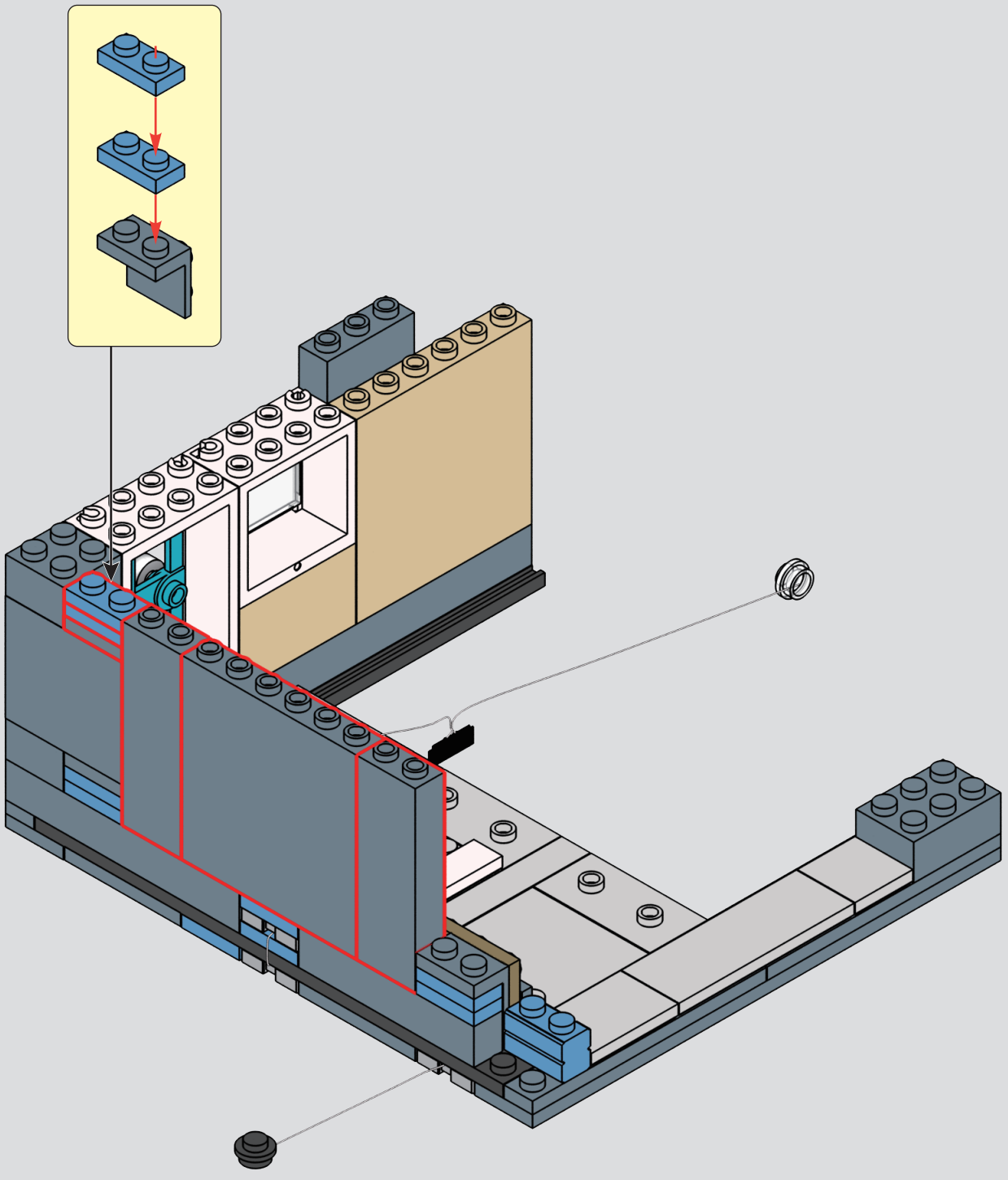

25

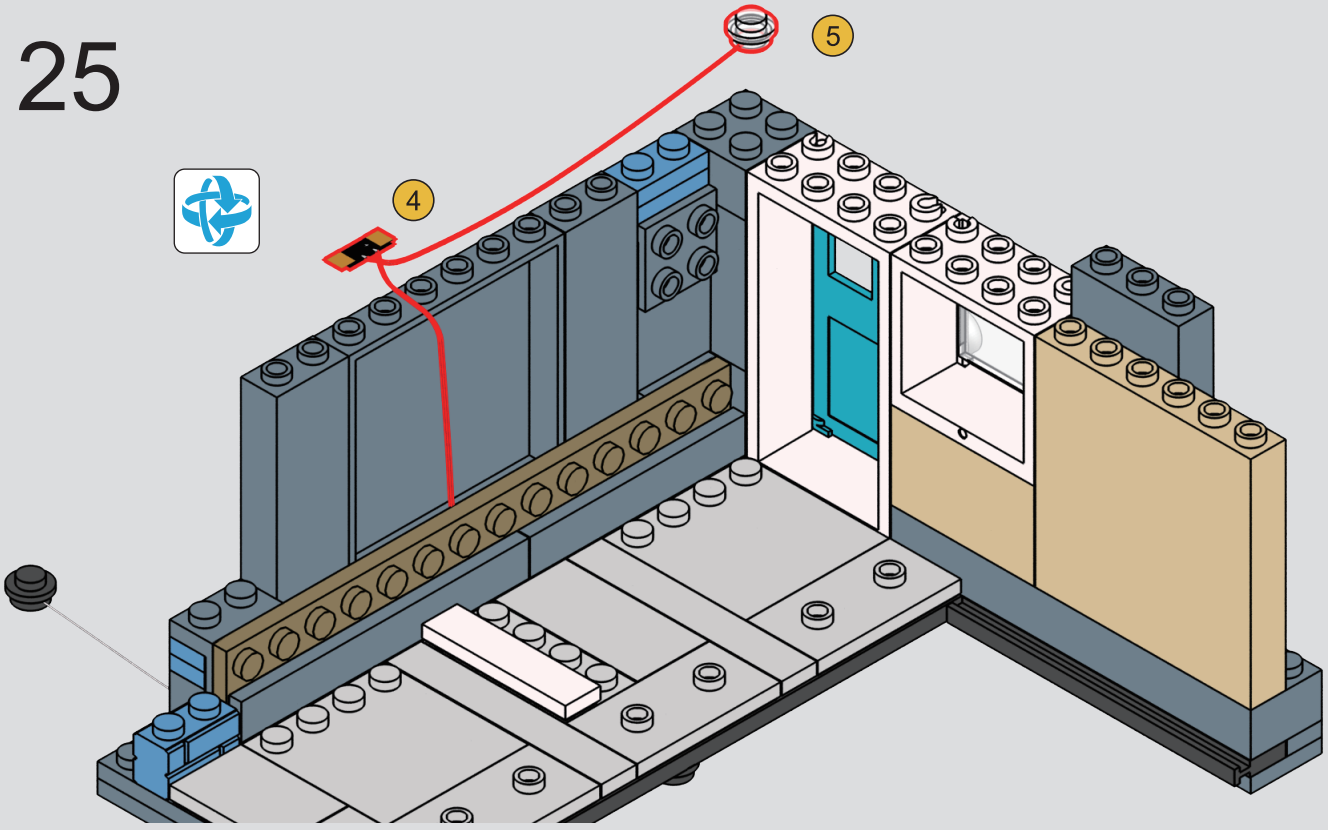

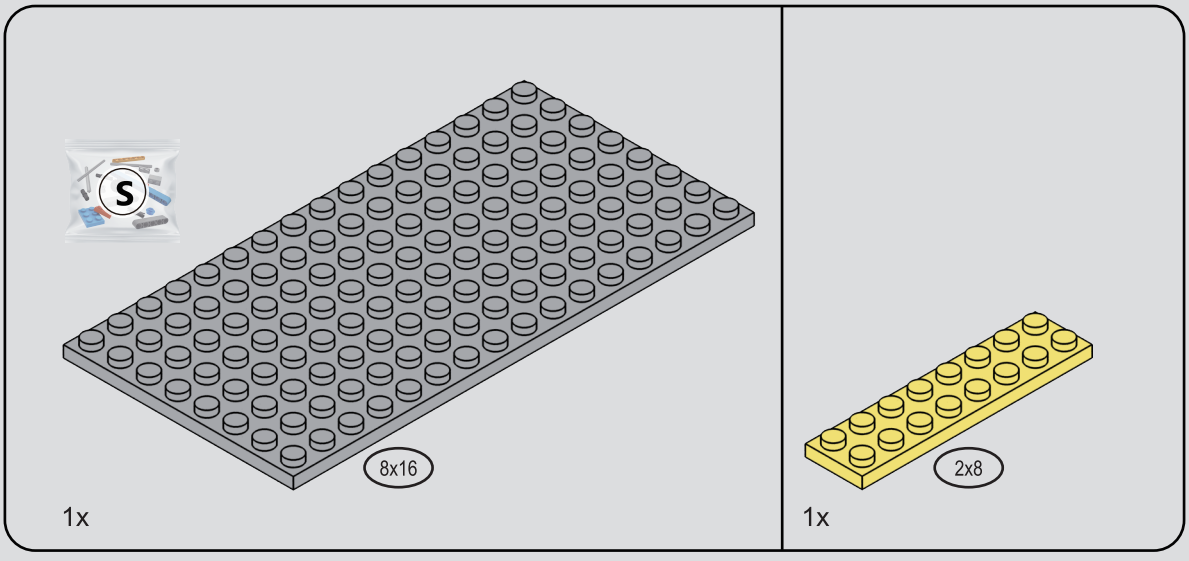

26

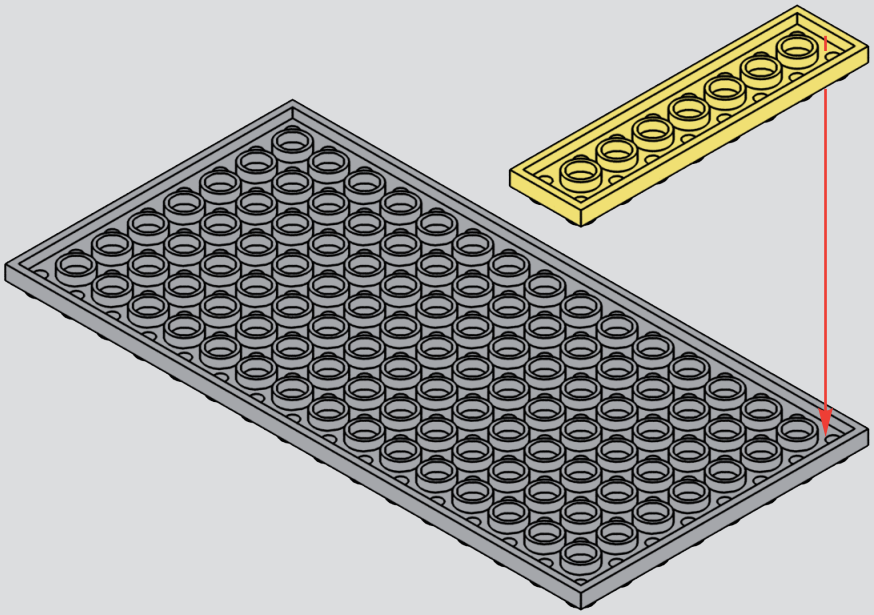

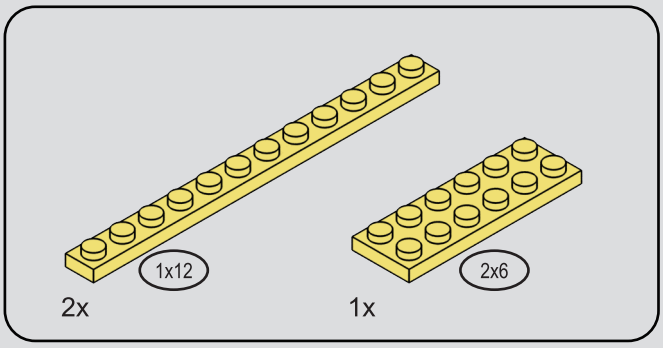

27

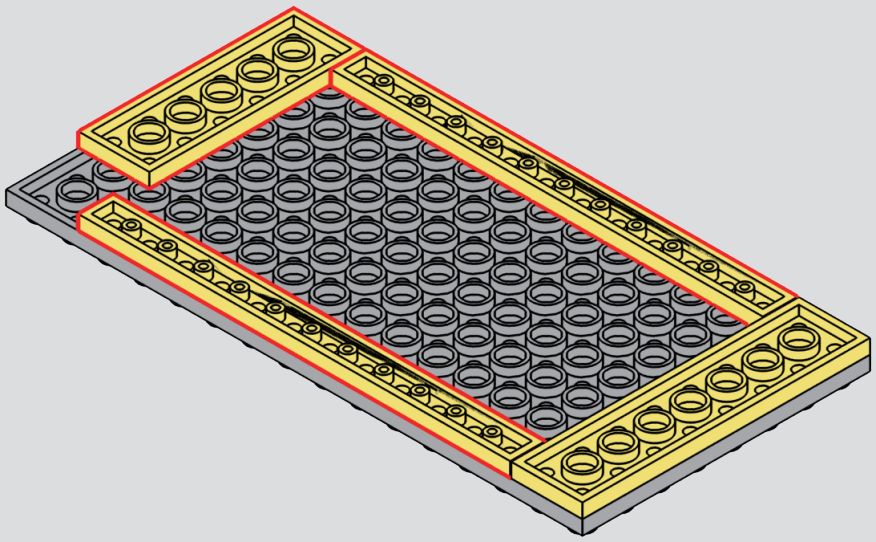

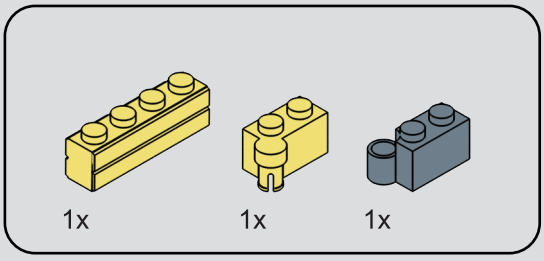

28

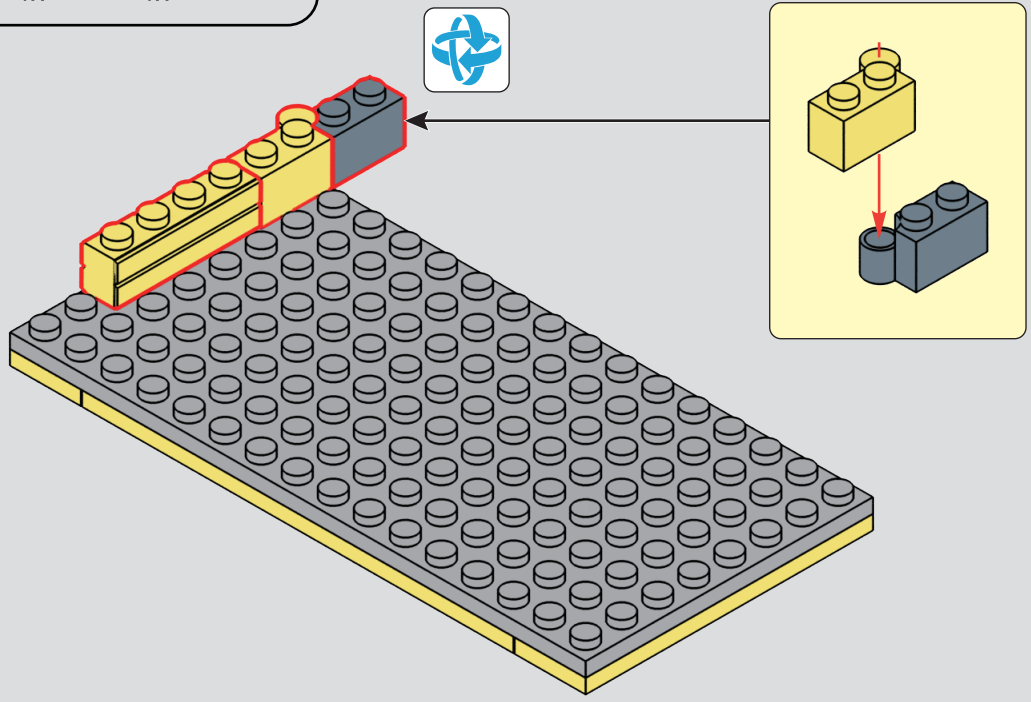

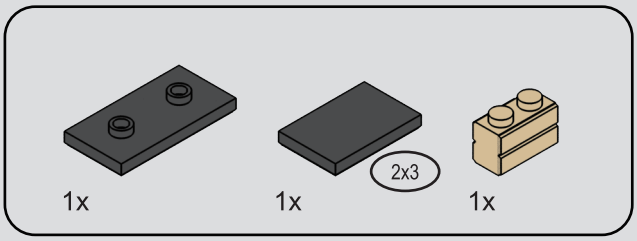

29

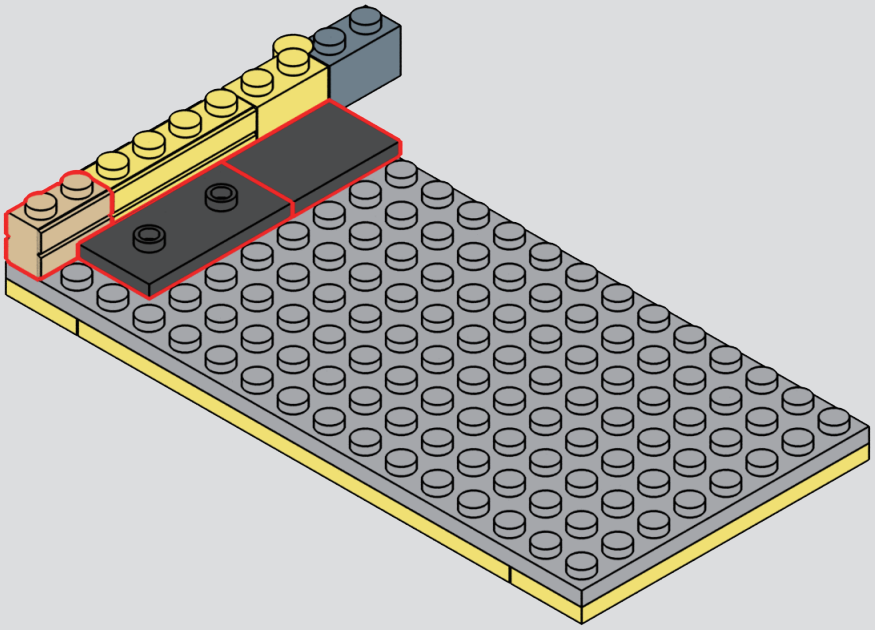

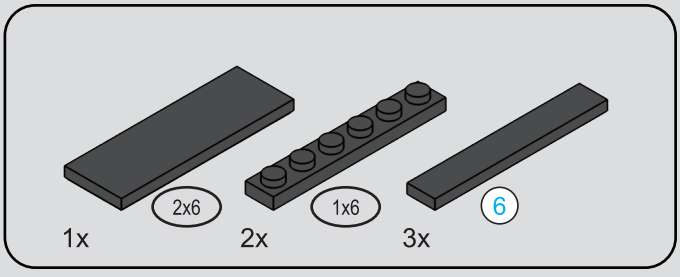



30

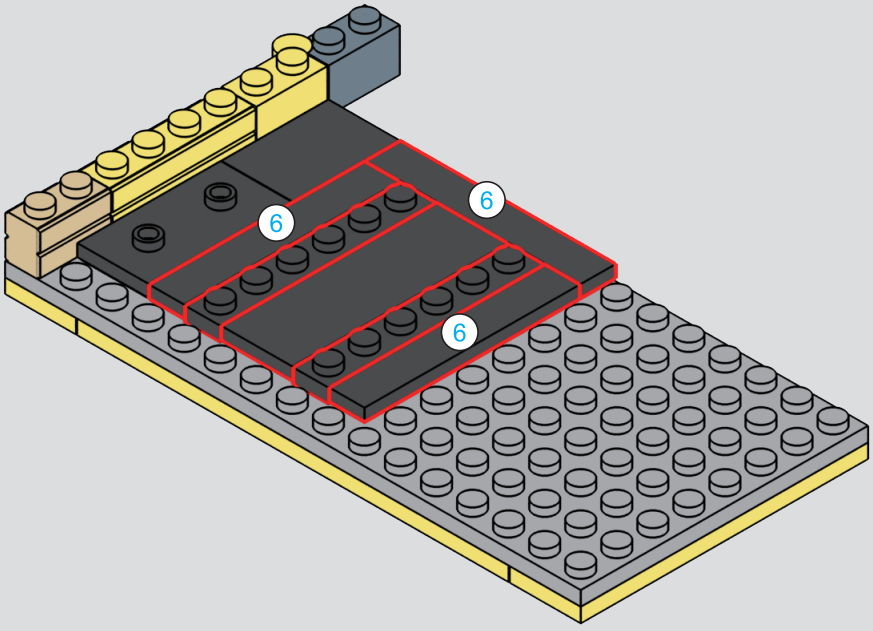

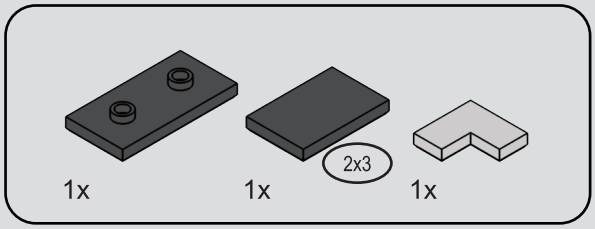

31

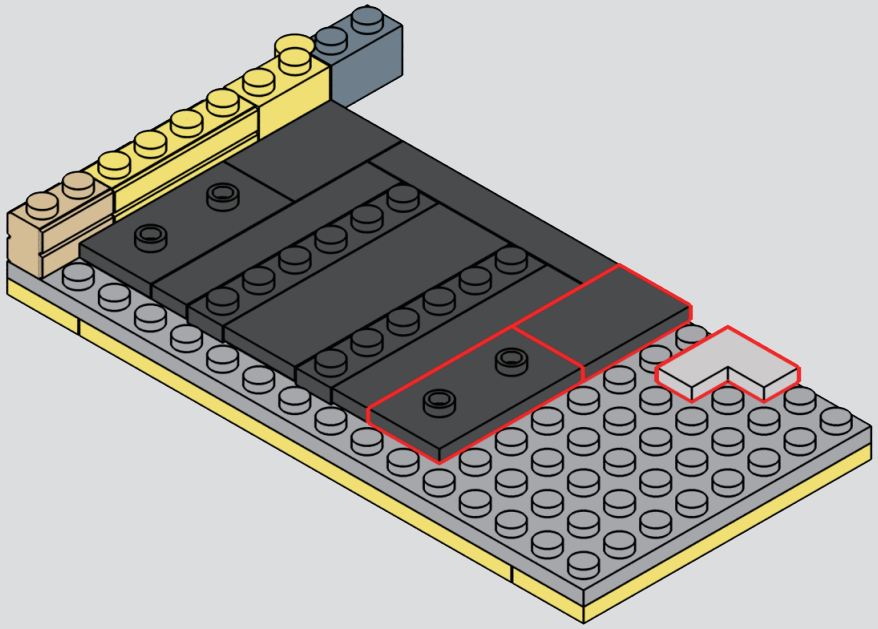

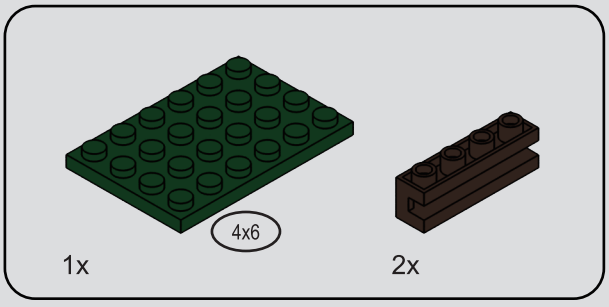

32

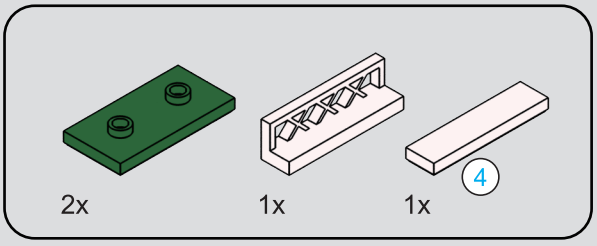

33

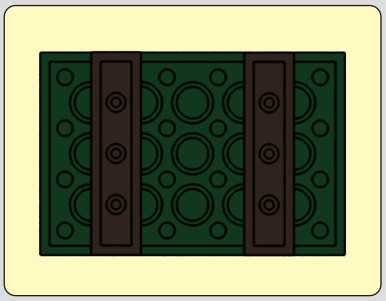

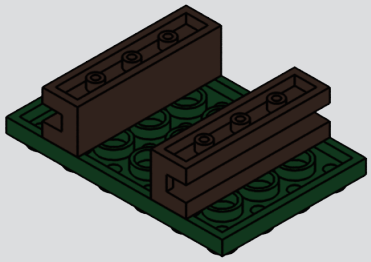

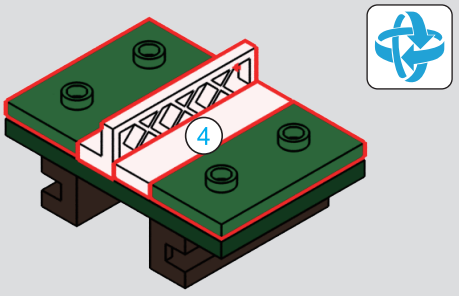

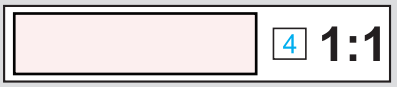

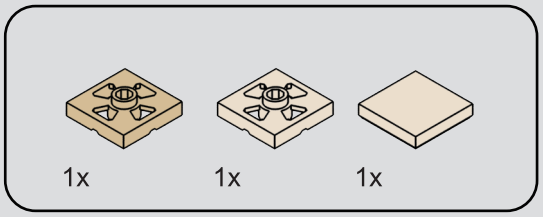

34

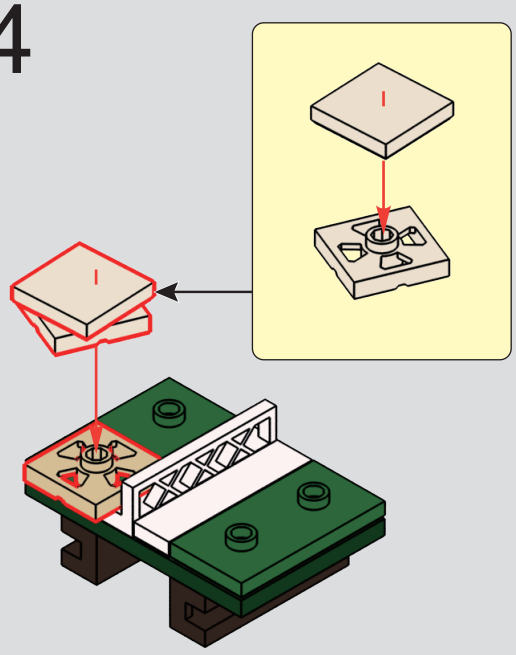

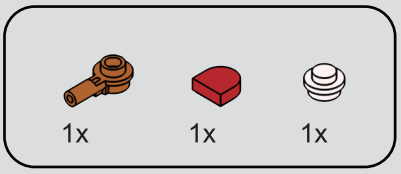

35

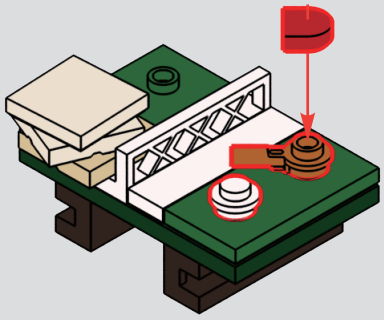

36

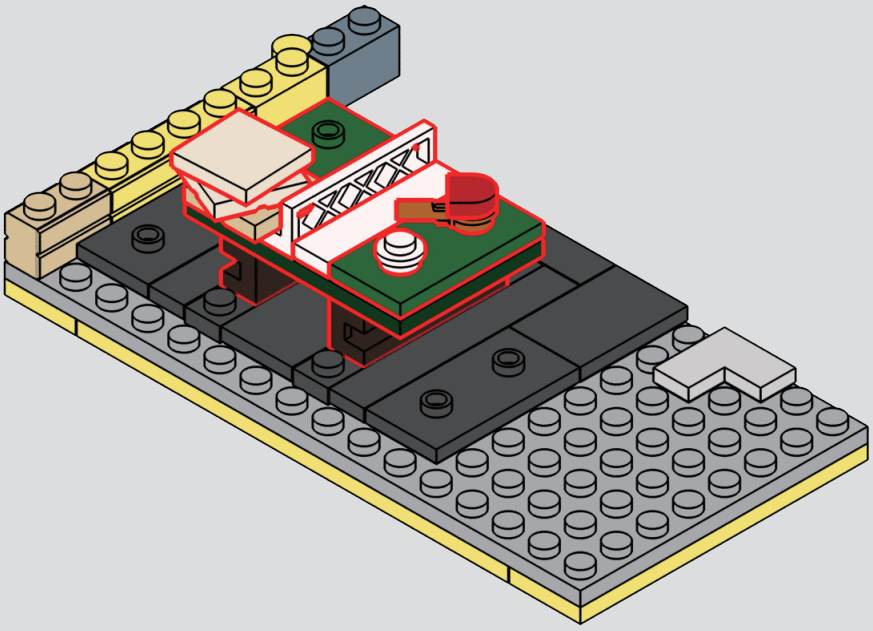

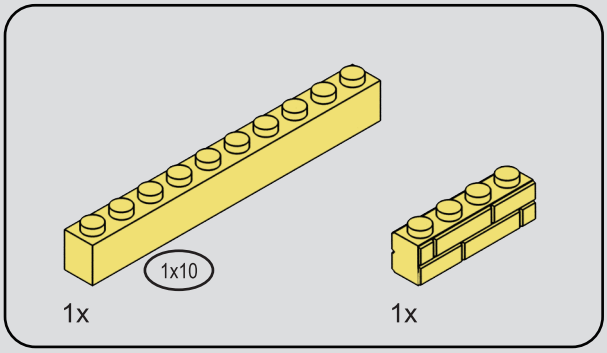

37

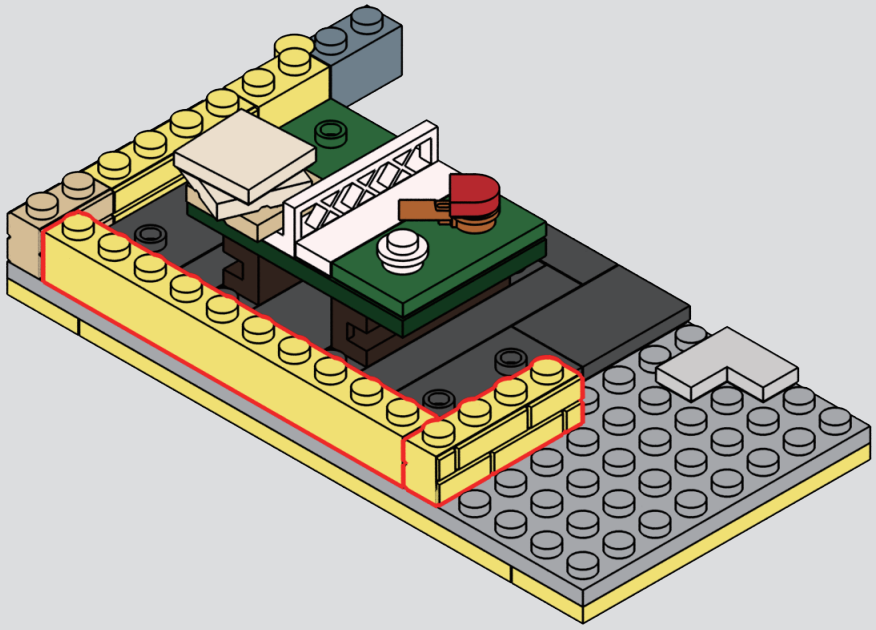

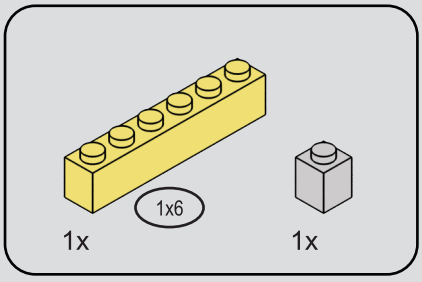

38

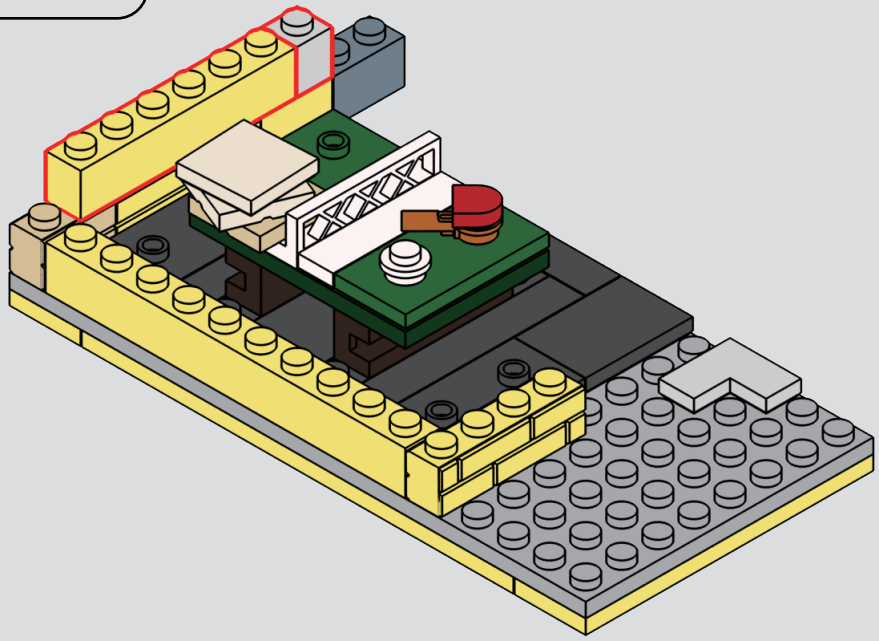

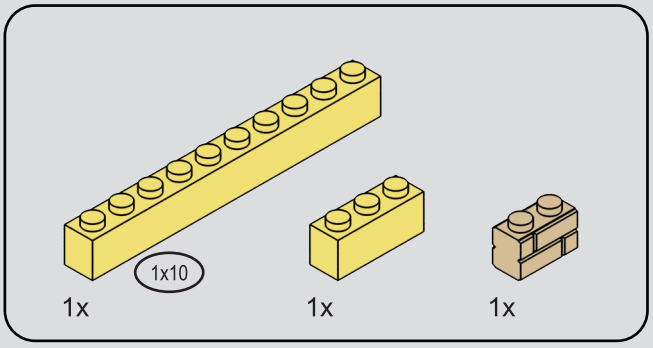

39

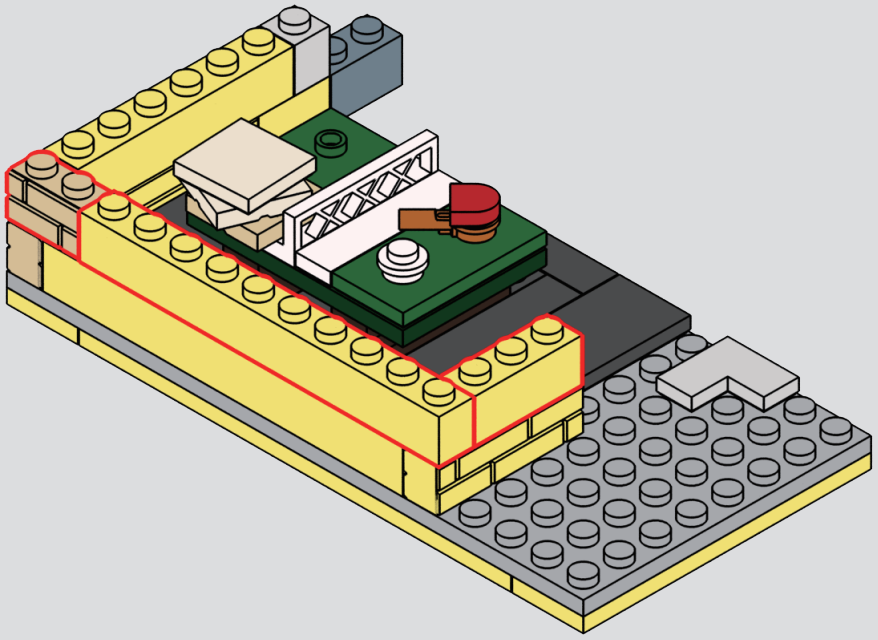

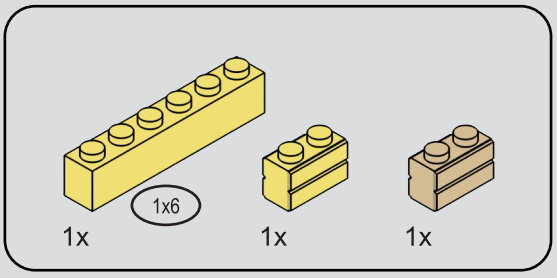

40

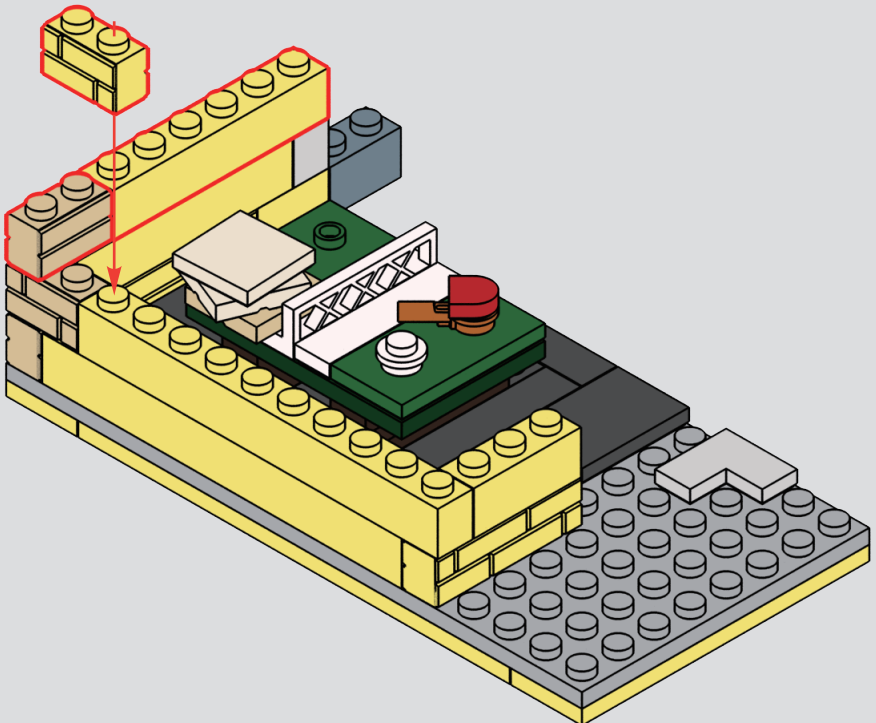

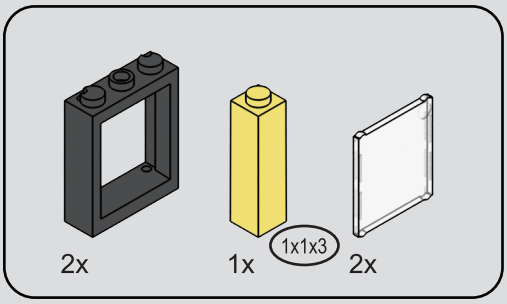

41

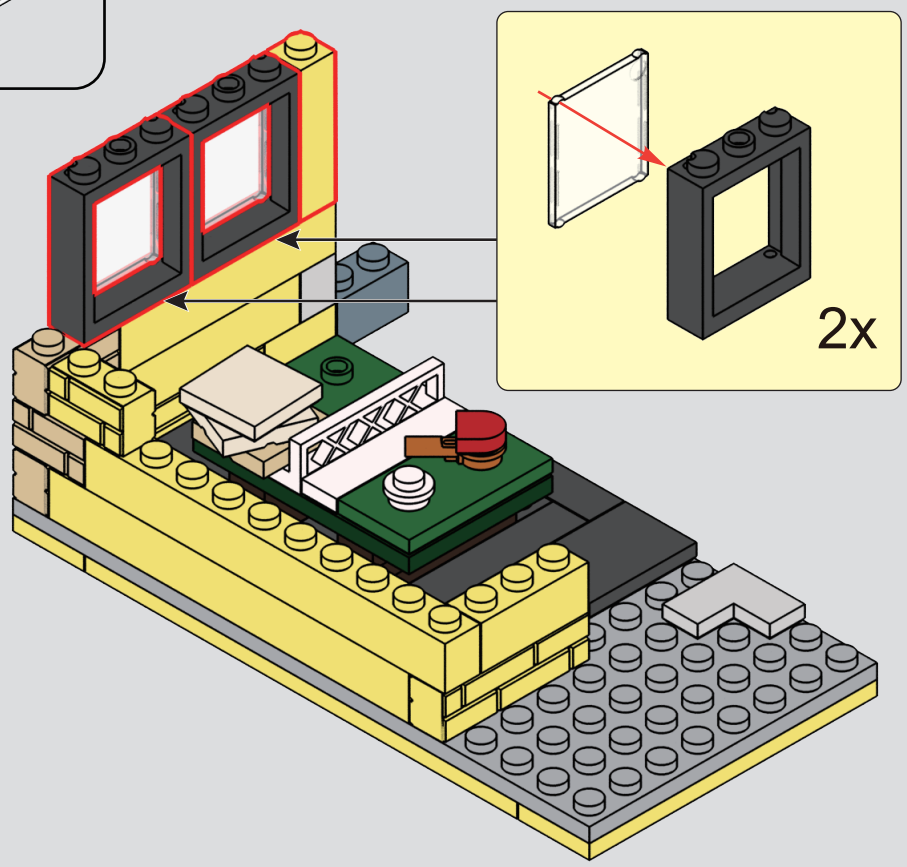

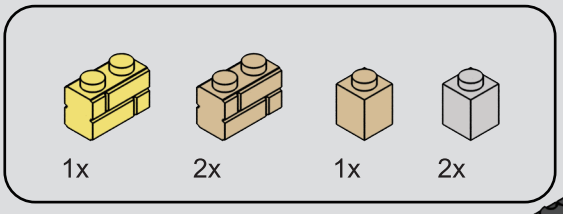

42

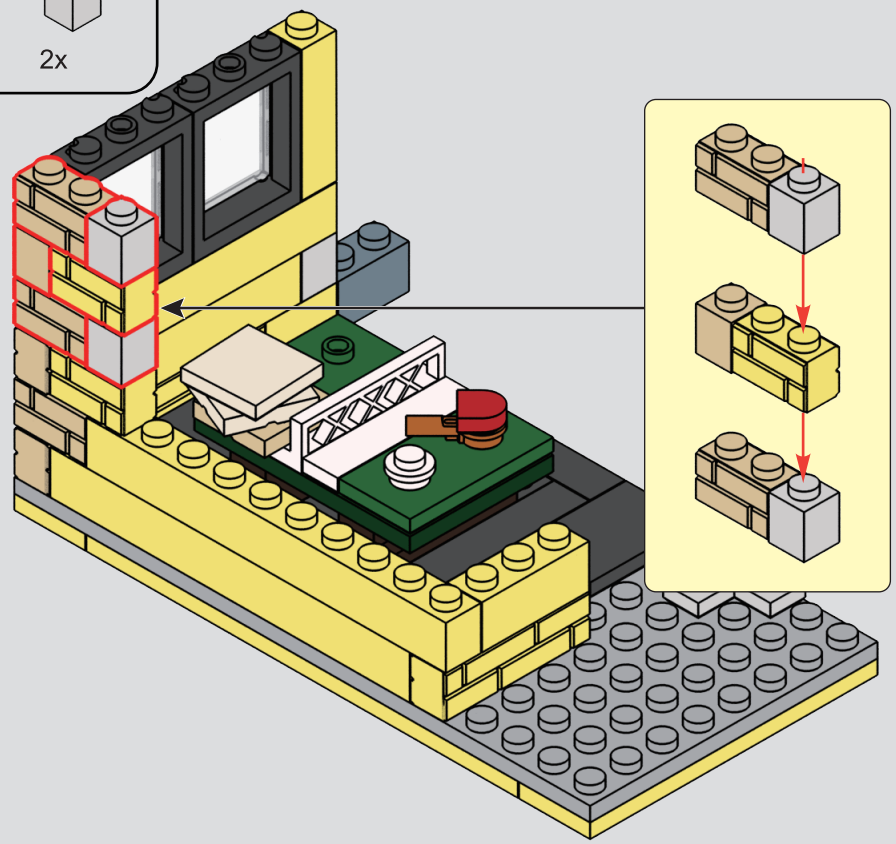

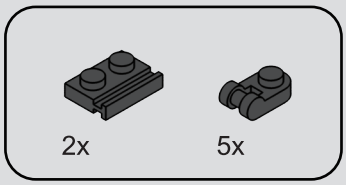

43

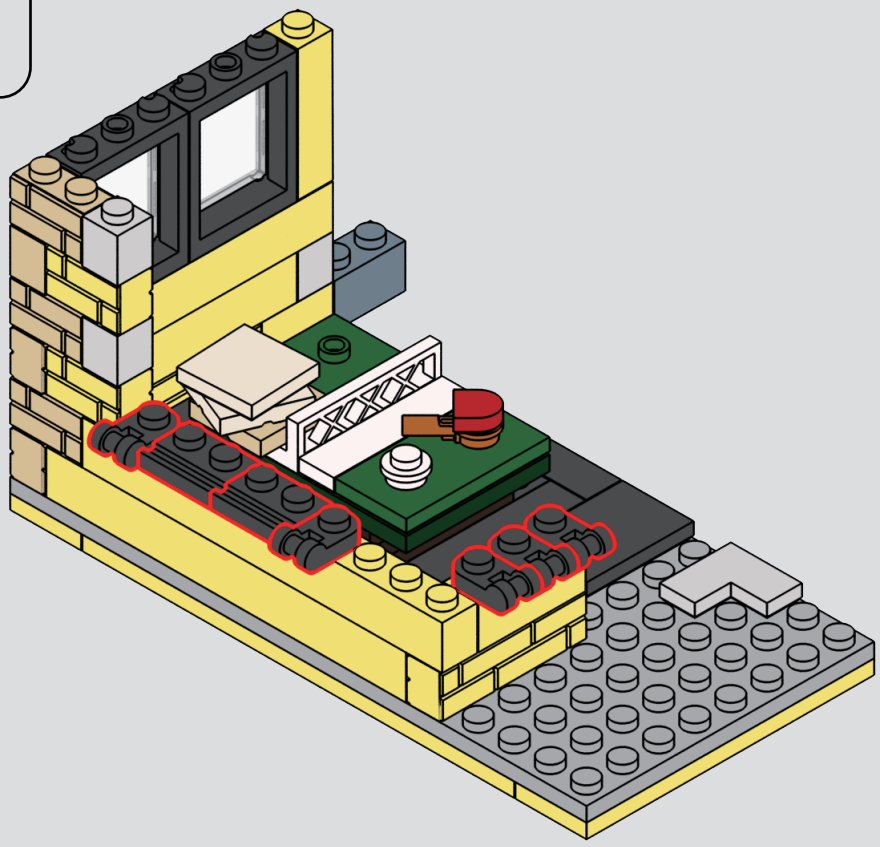

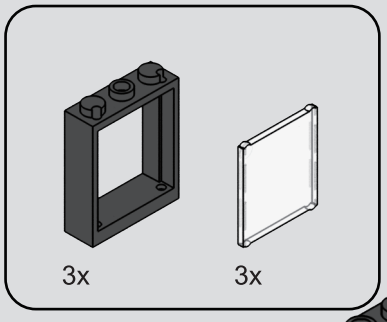

44

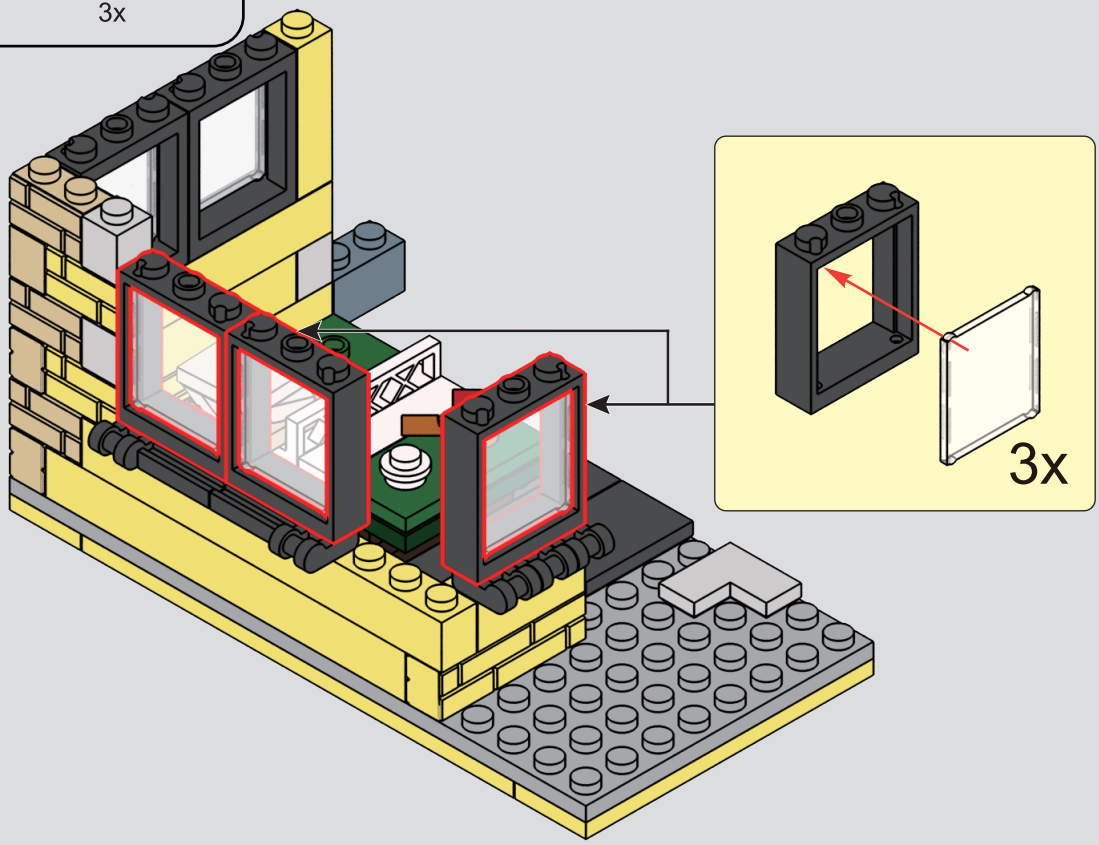

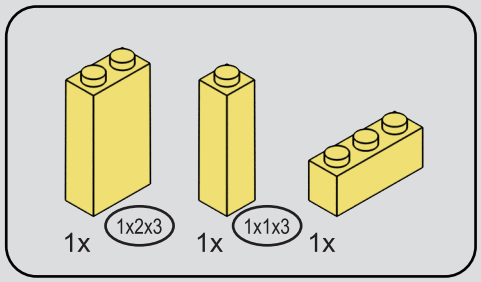

45

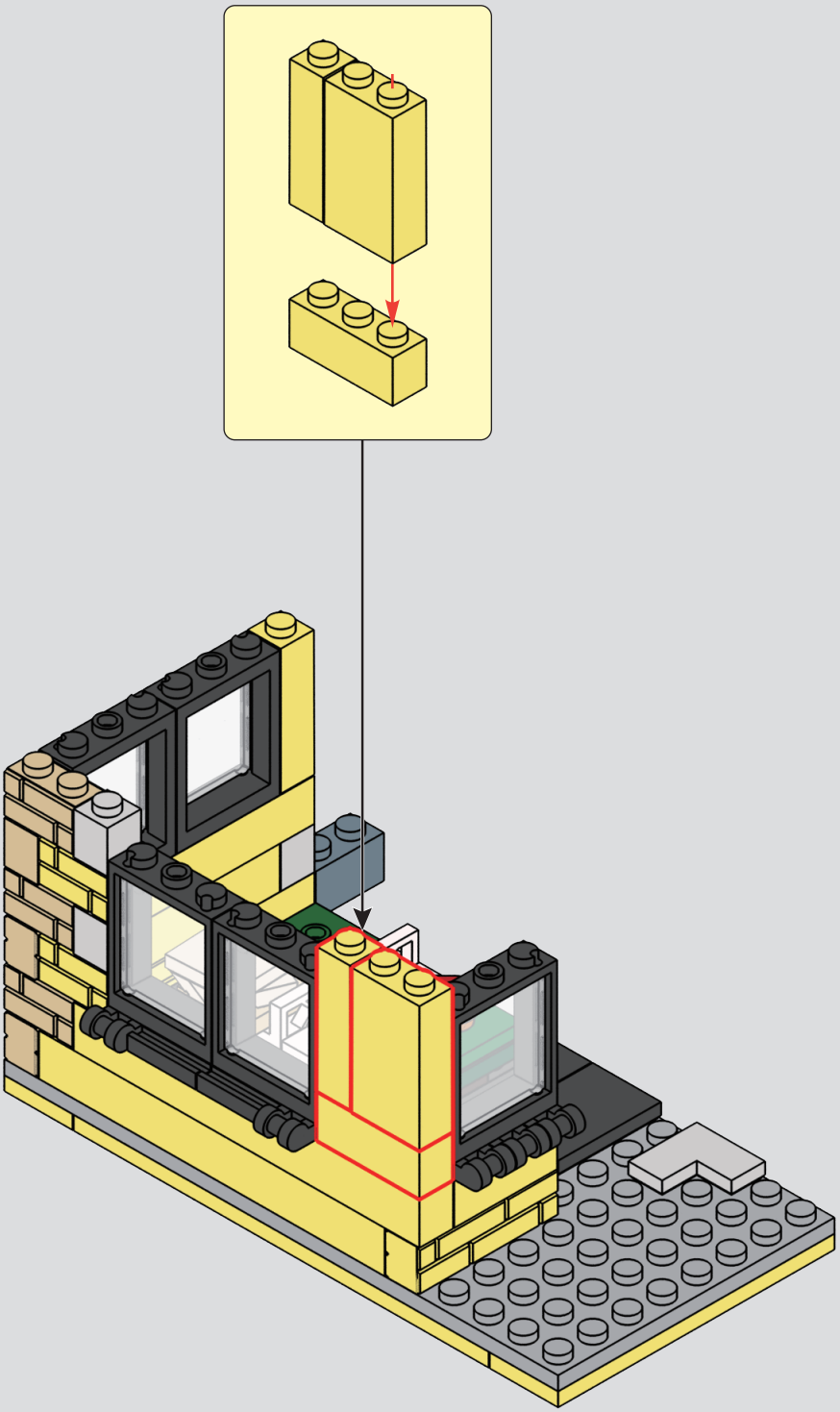

46

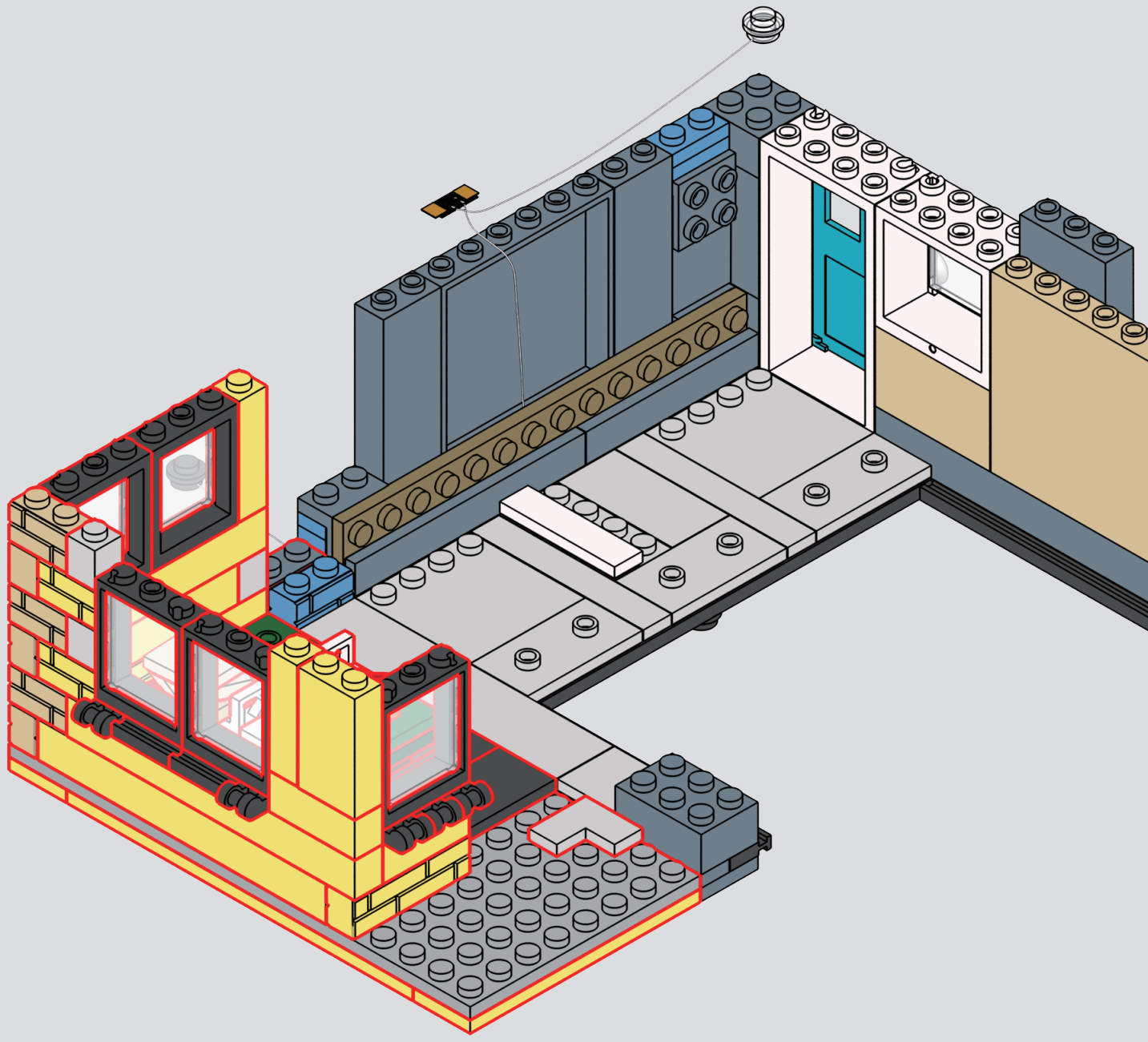

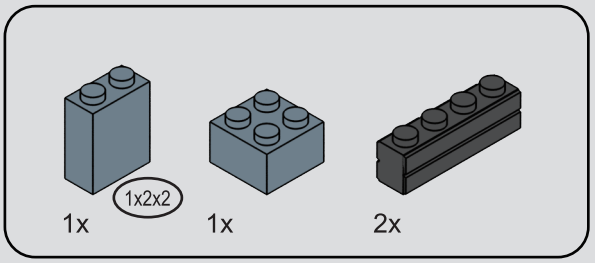

47

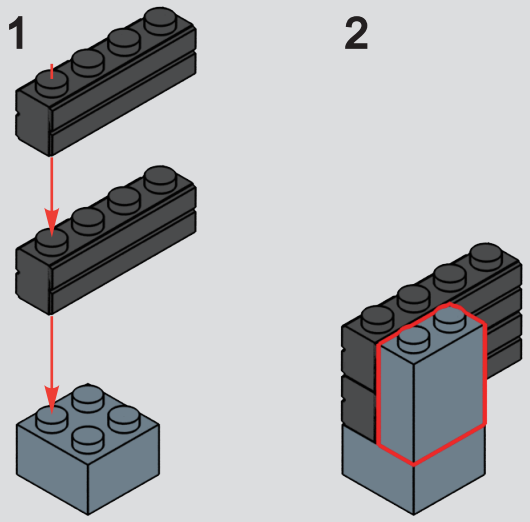

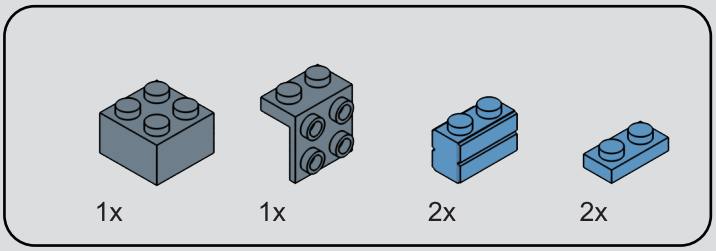

48

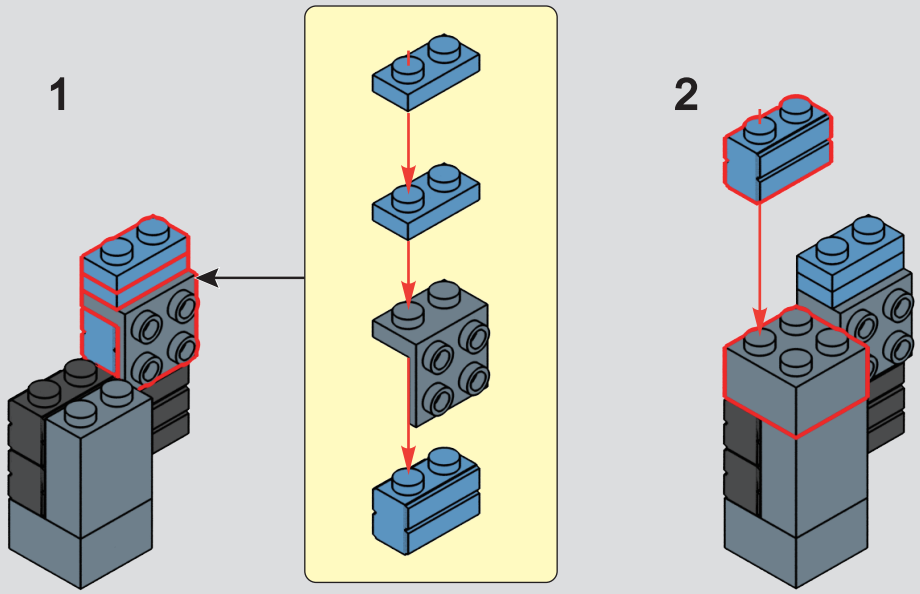

49

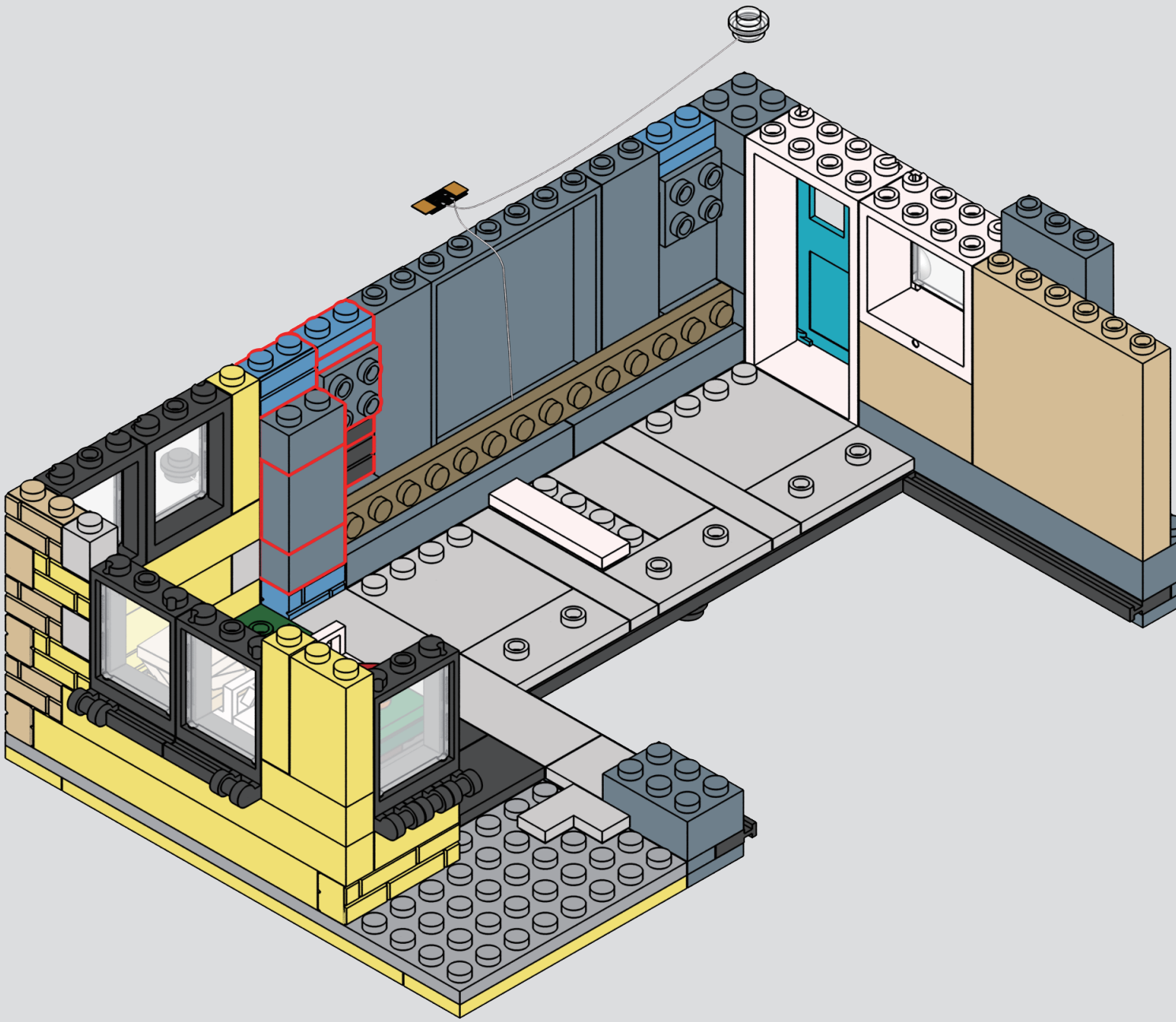


8
S
F
LUMBRICKS
03

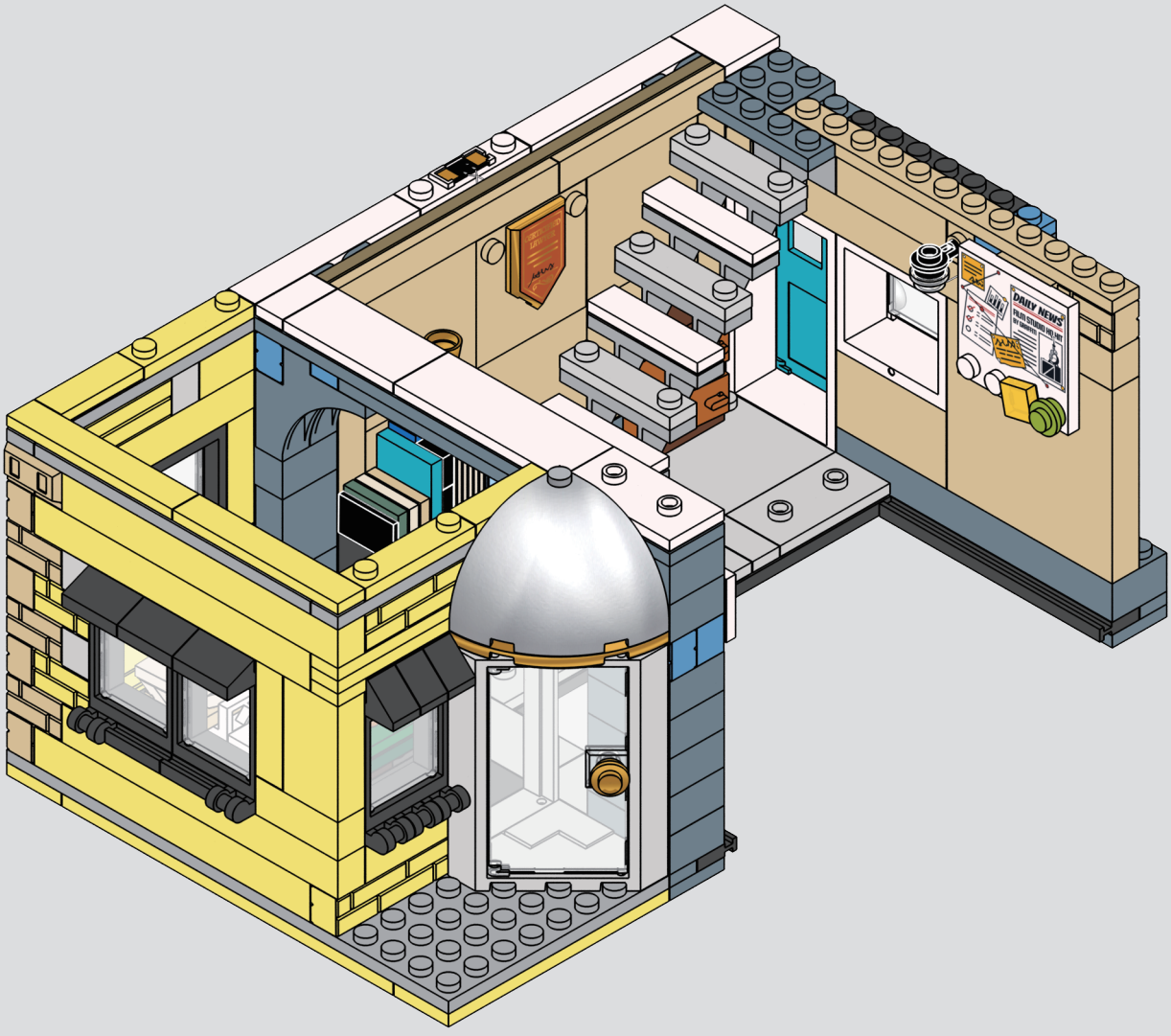
DAILY NEWS

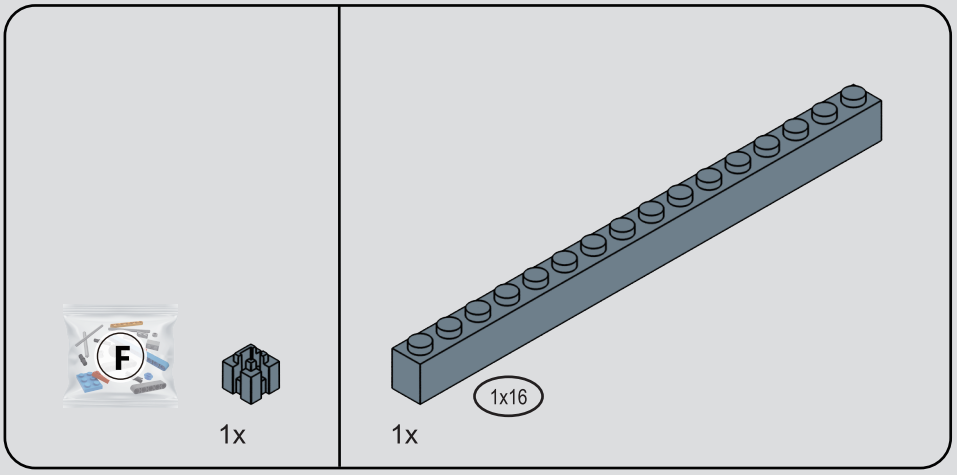

50

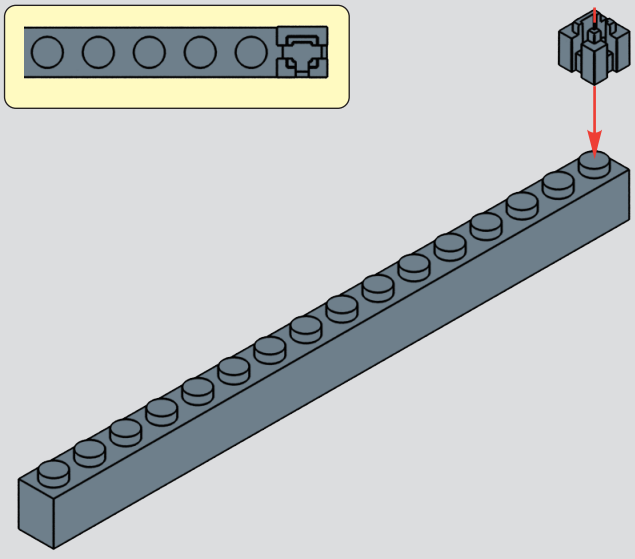

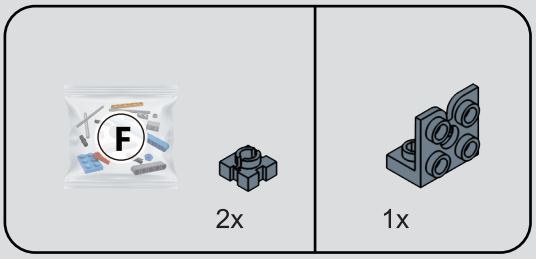

51

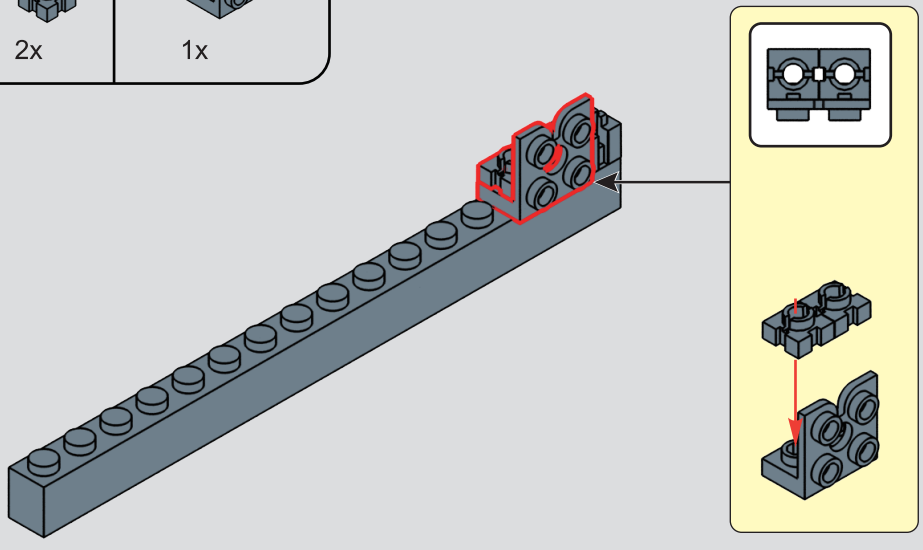

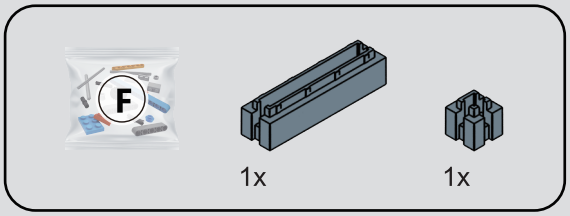

52

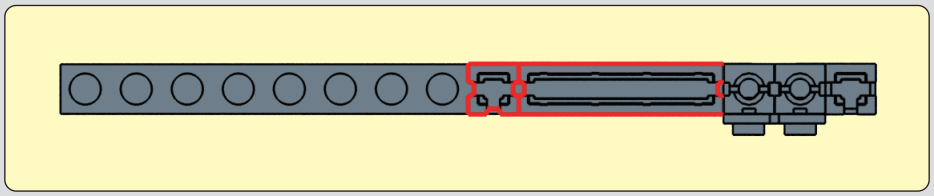

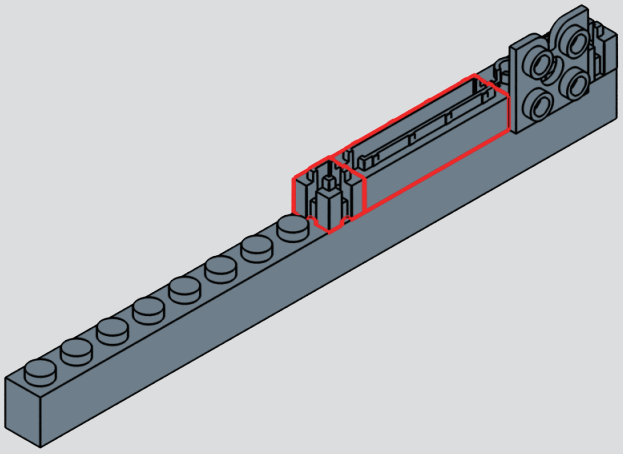

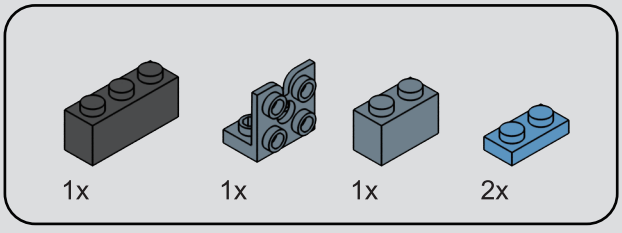

53

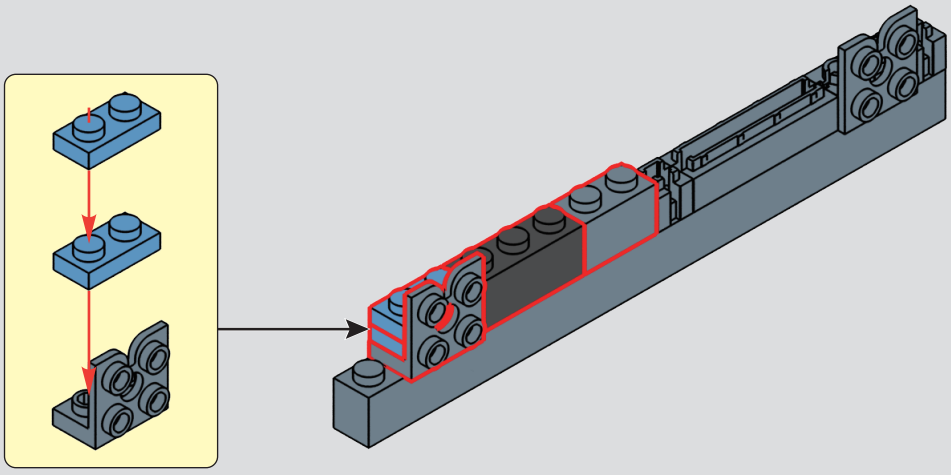

54

1

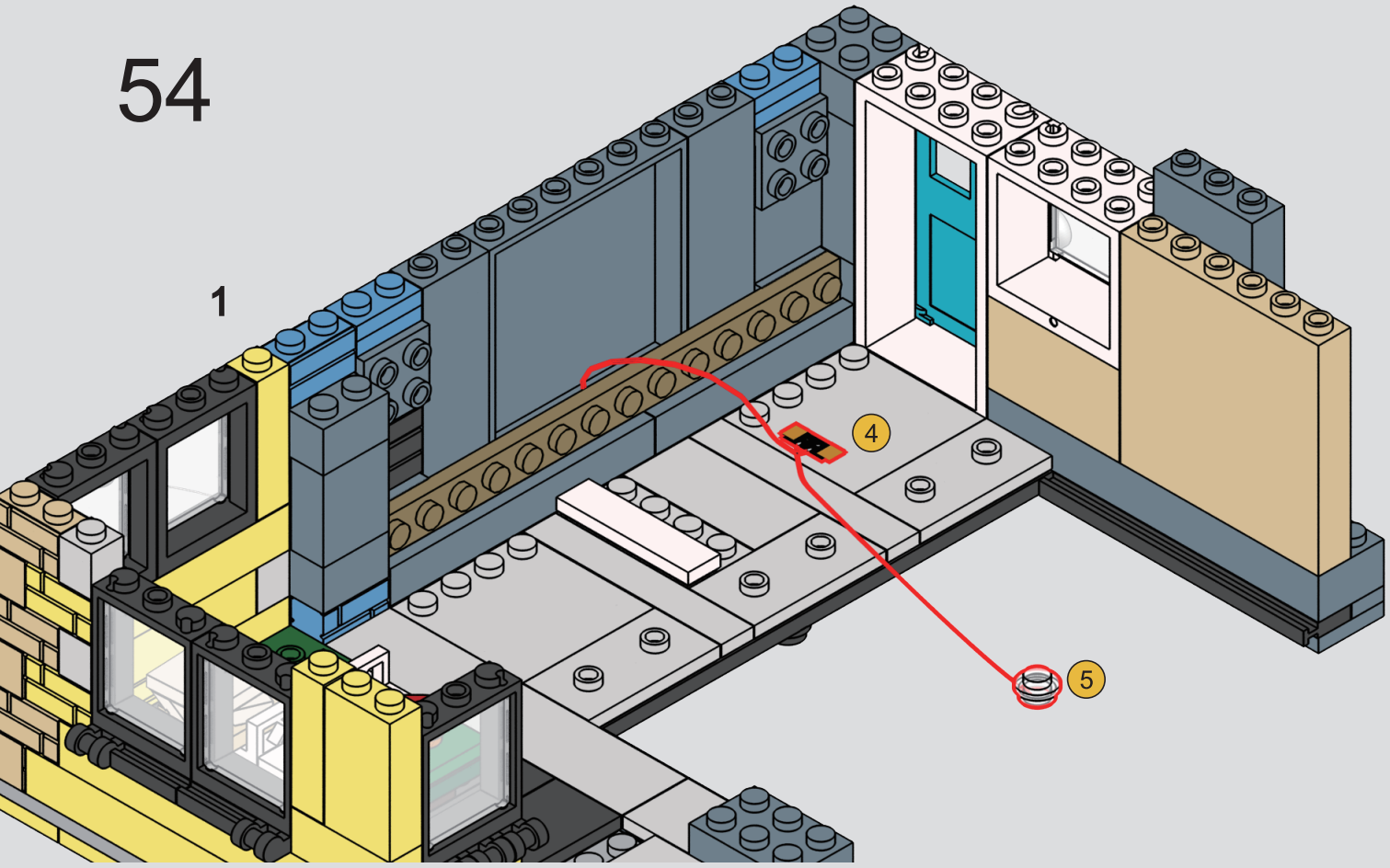

2

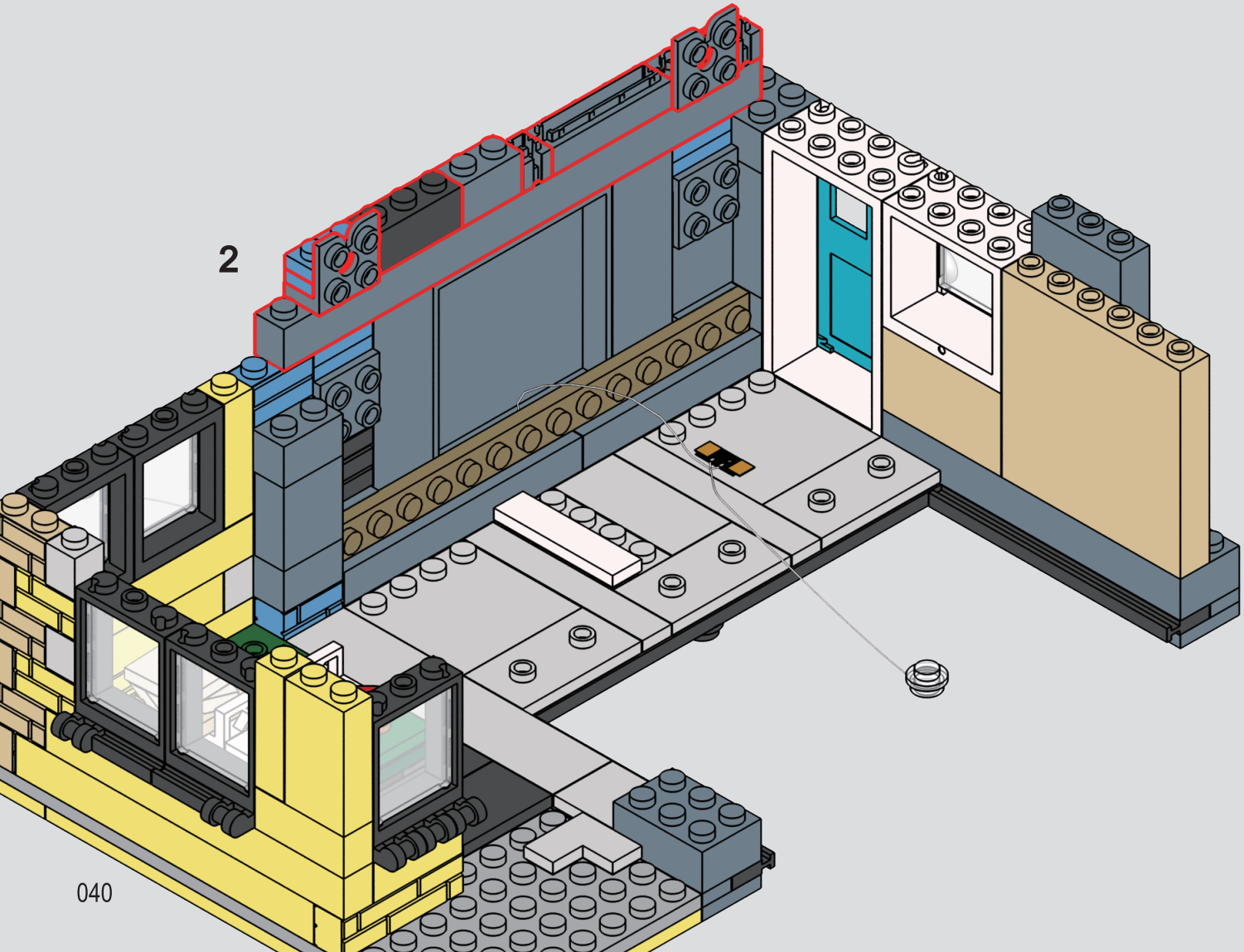

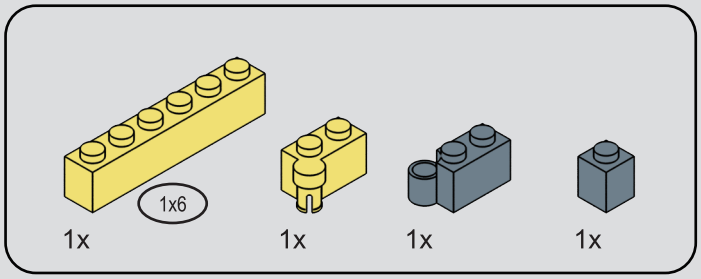

55

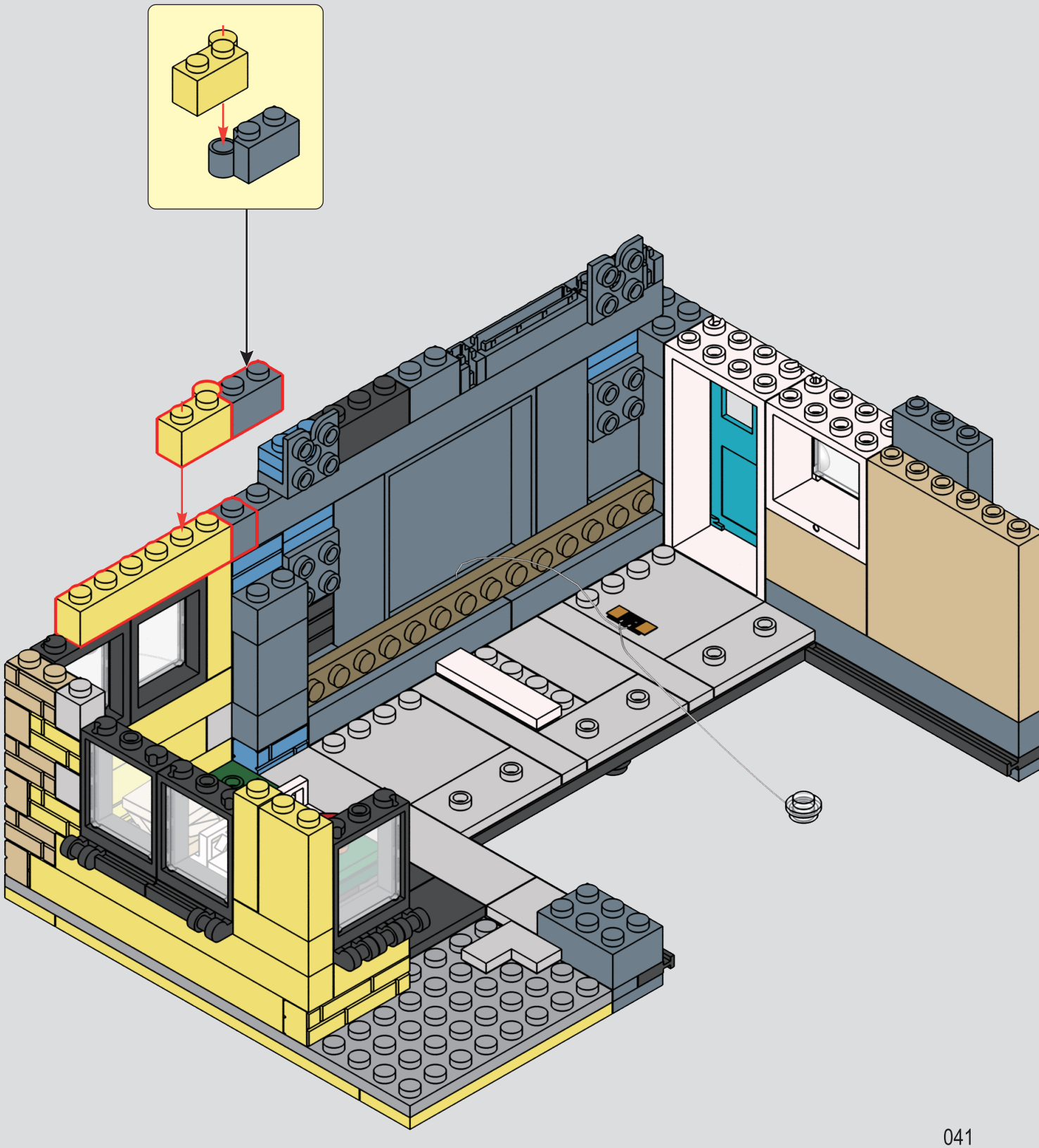

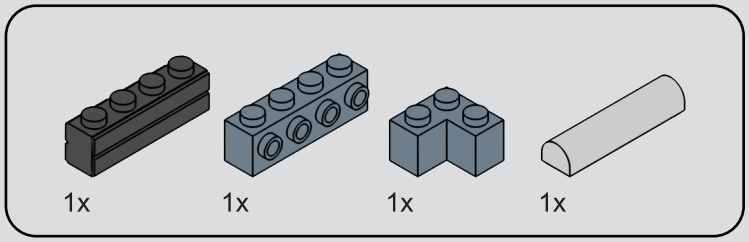

56

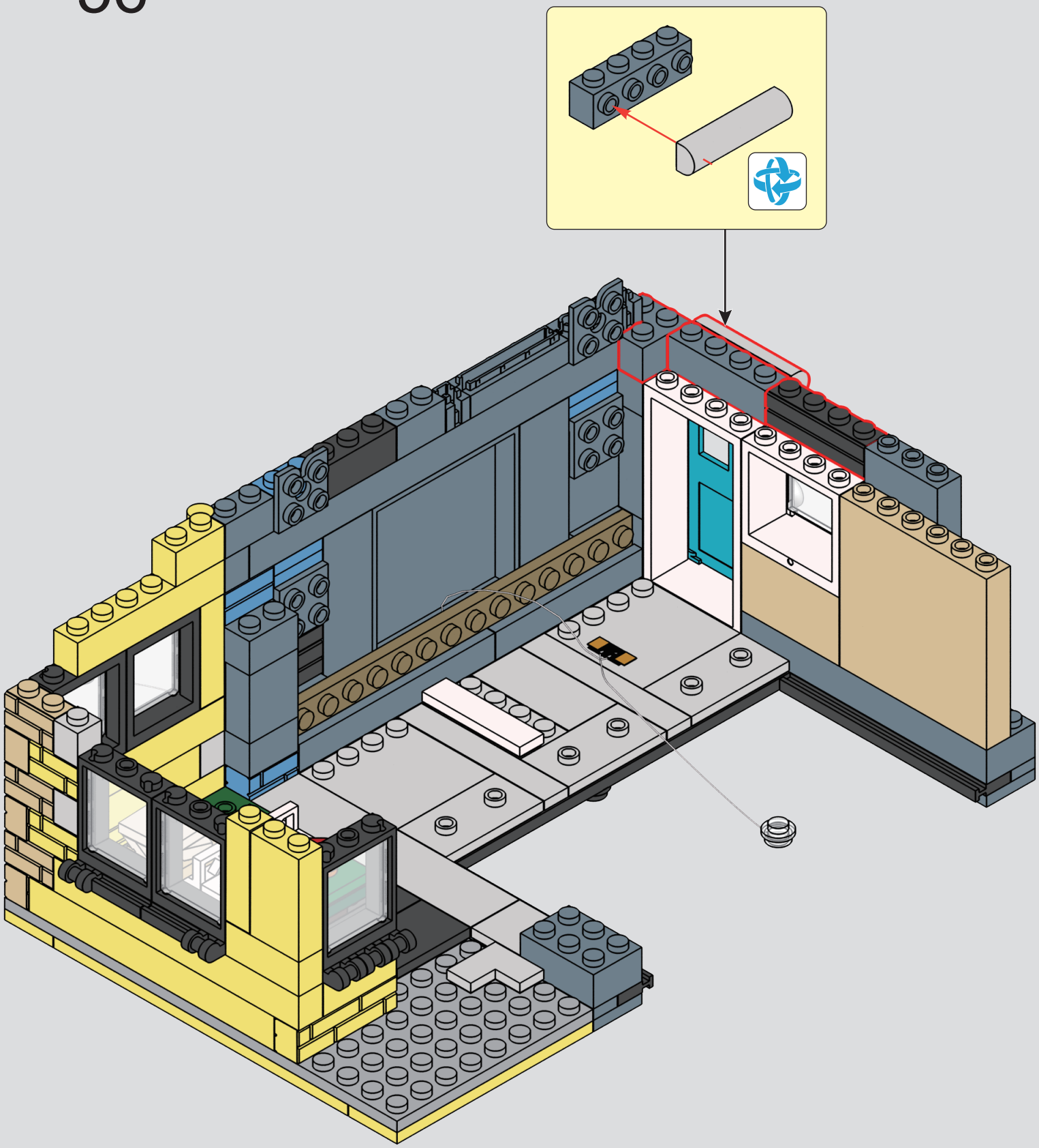

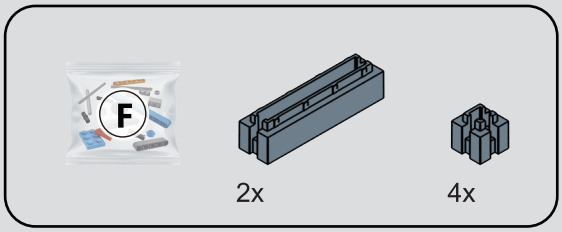

57

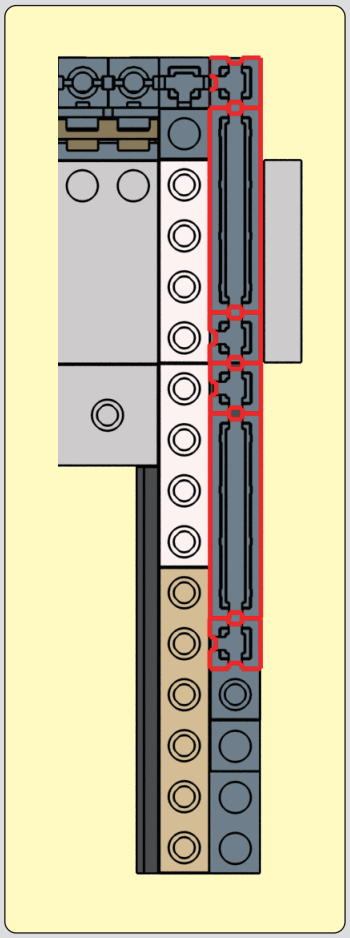

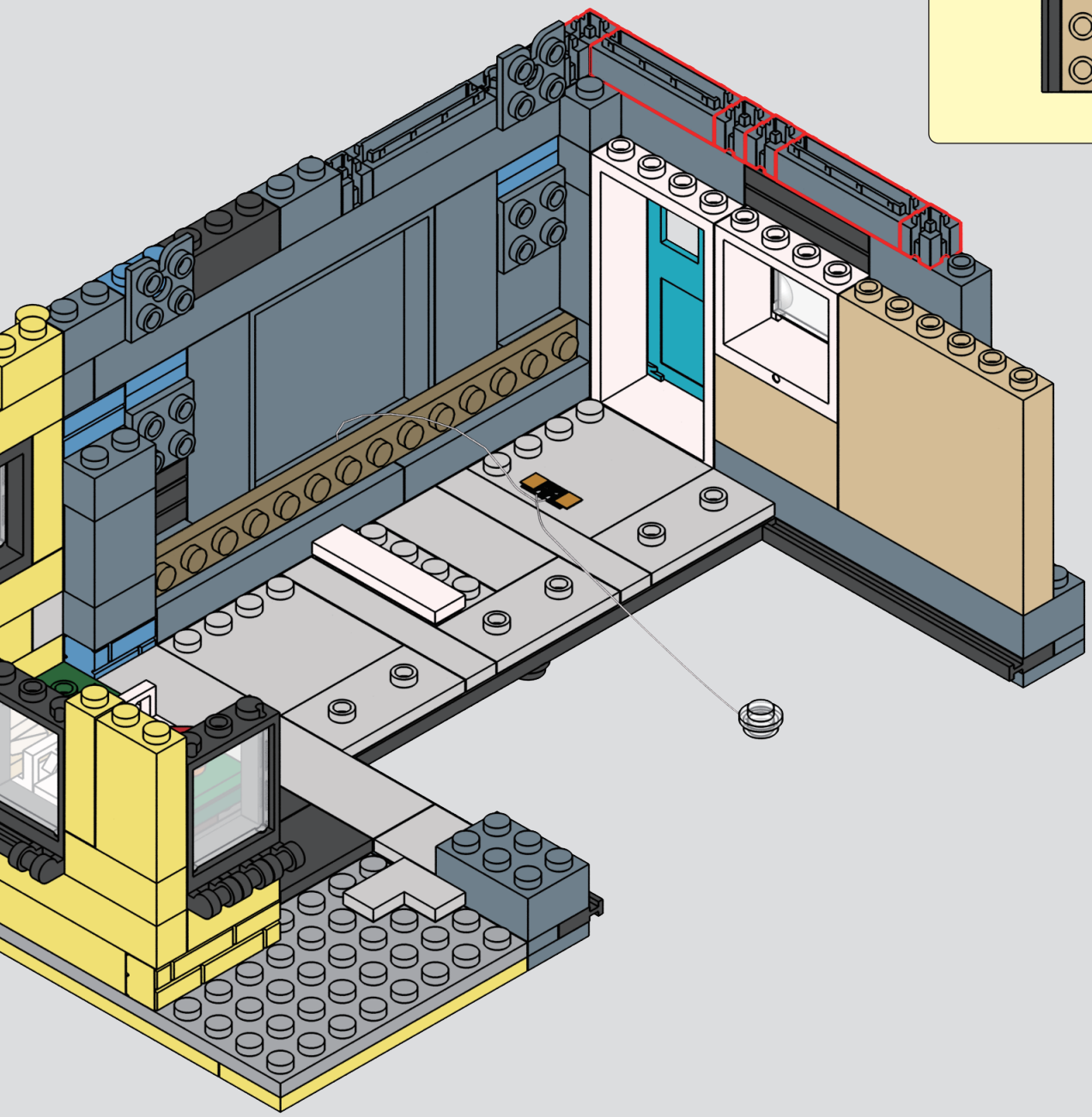

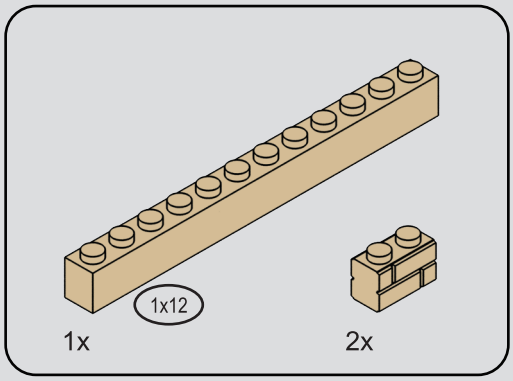

58

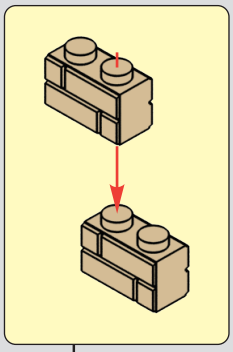

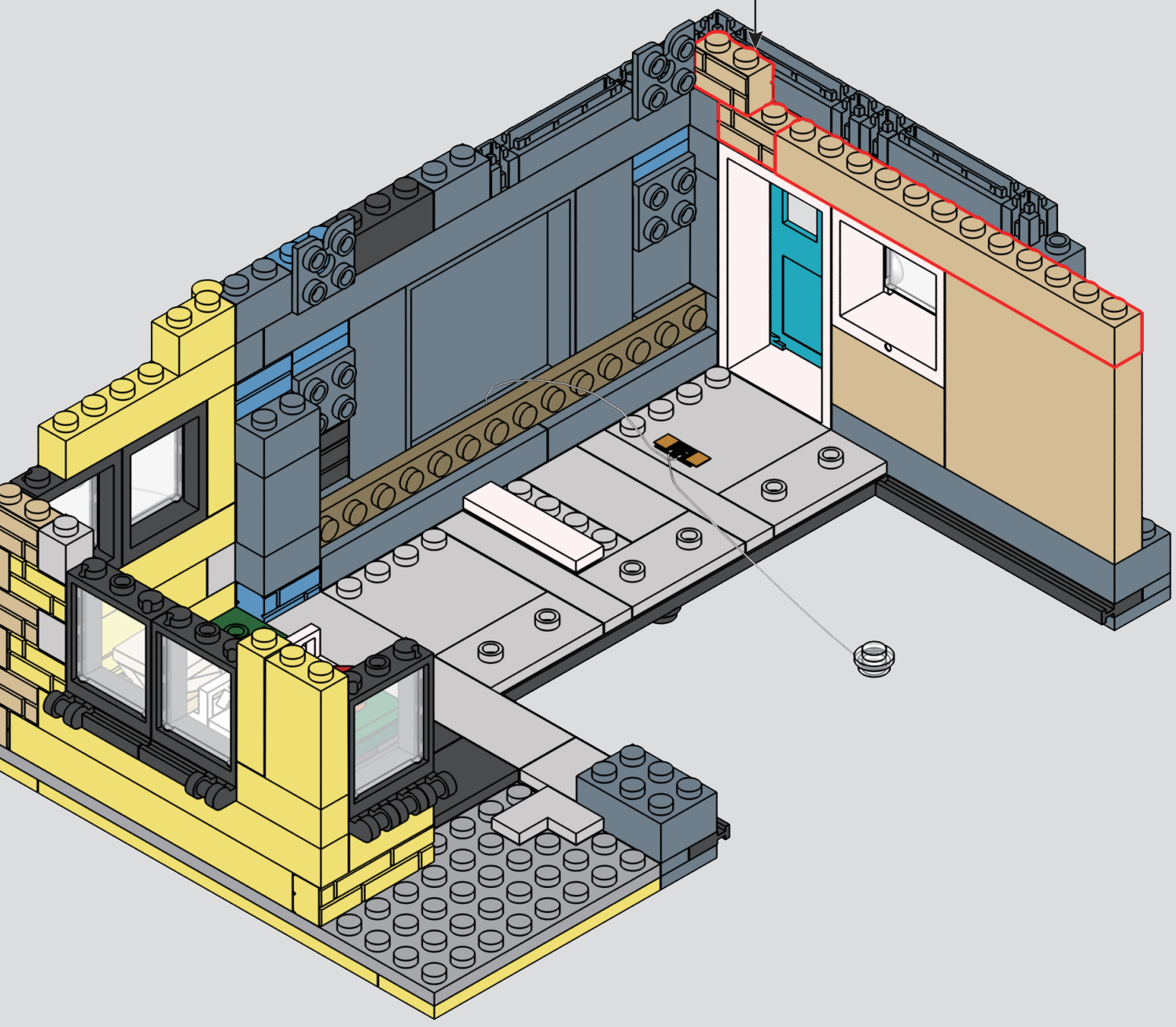

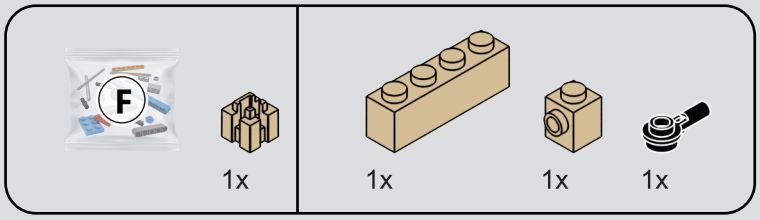

59

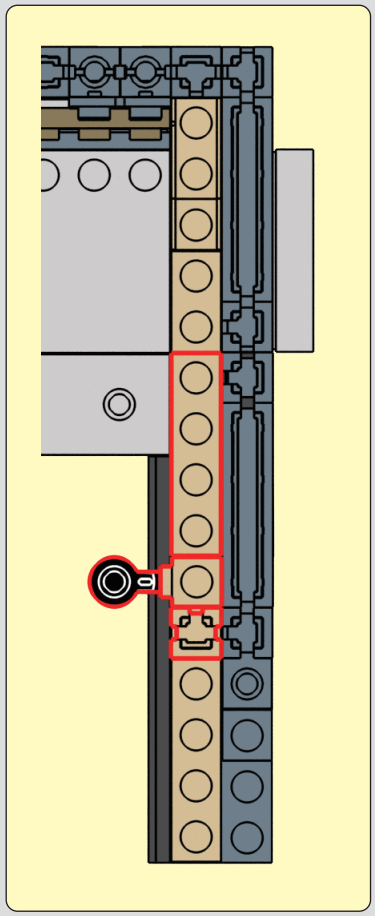

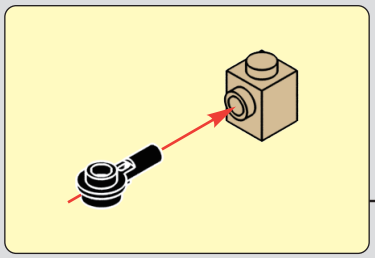

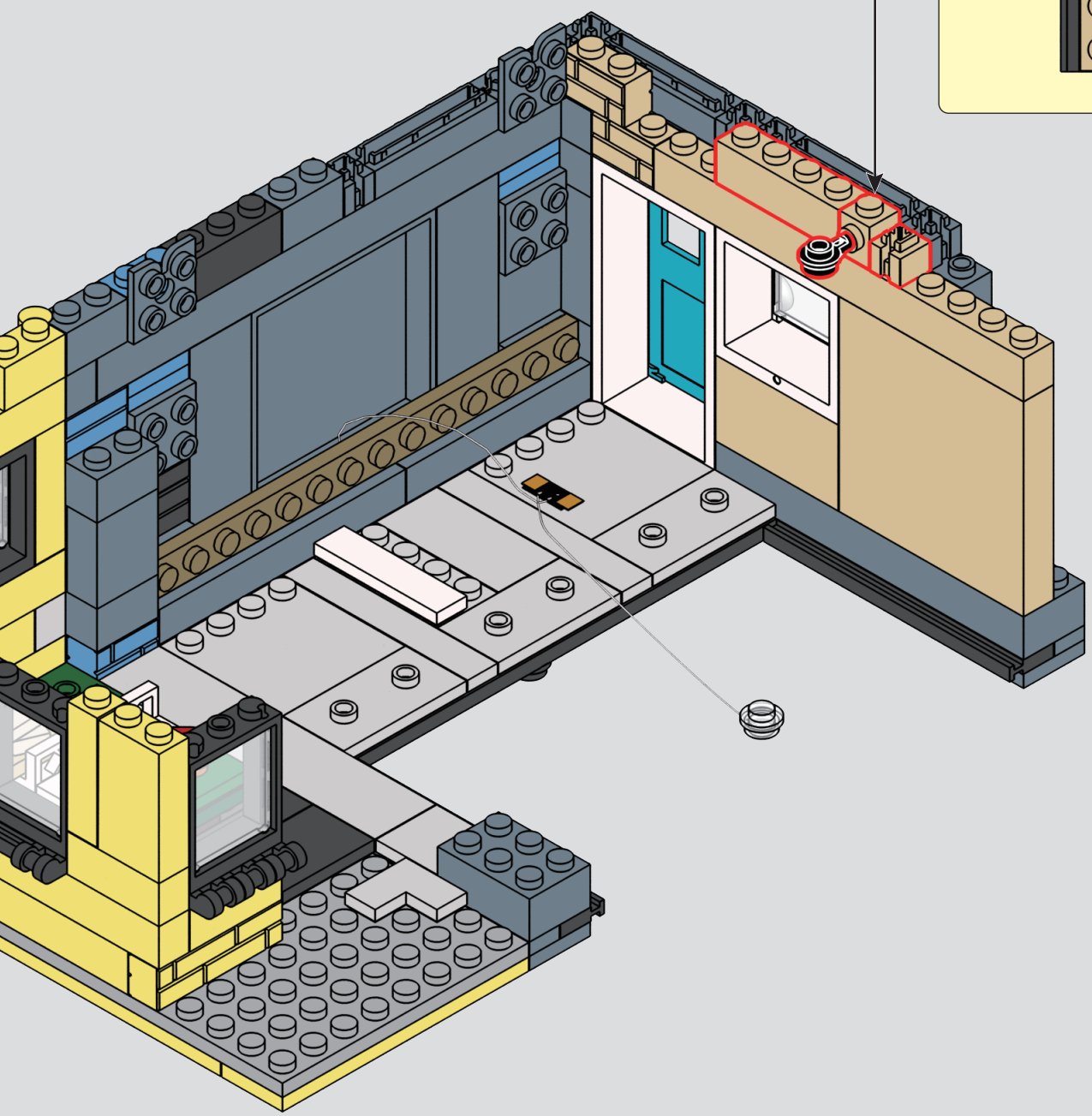

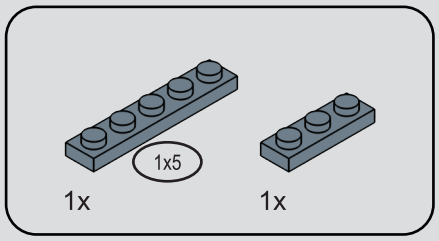

60

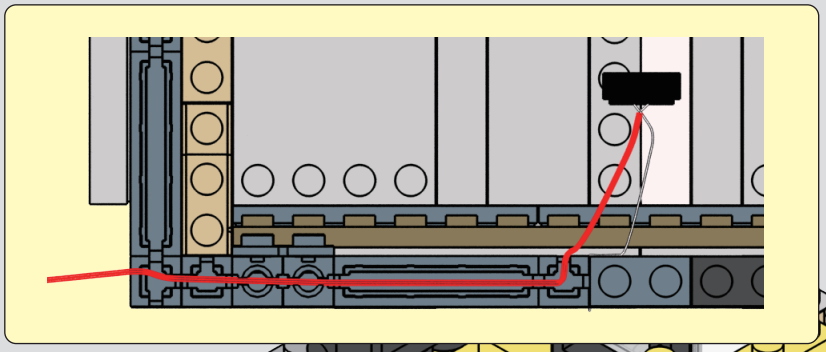

1

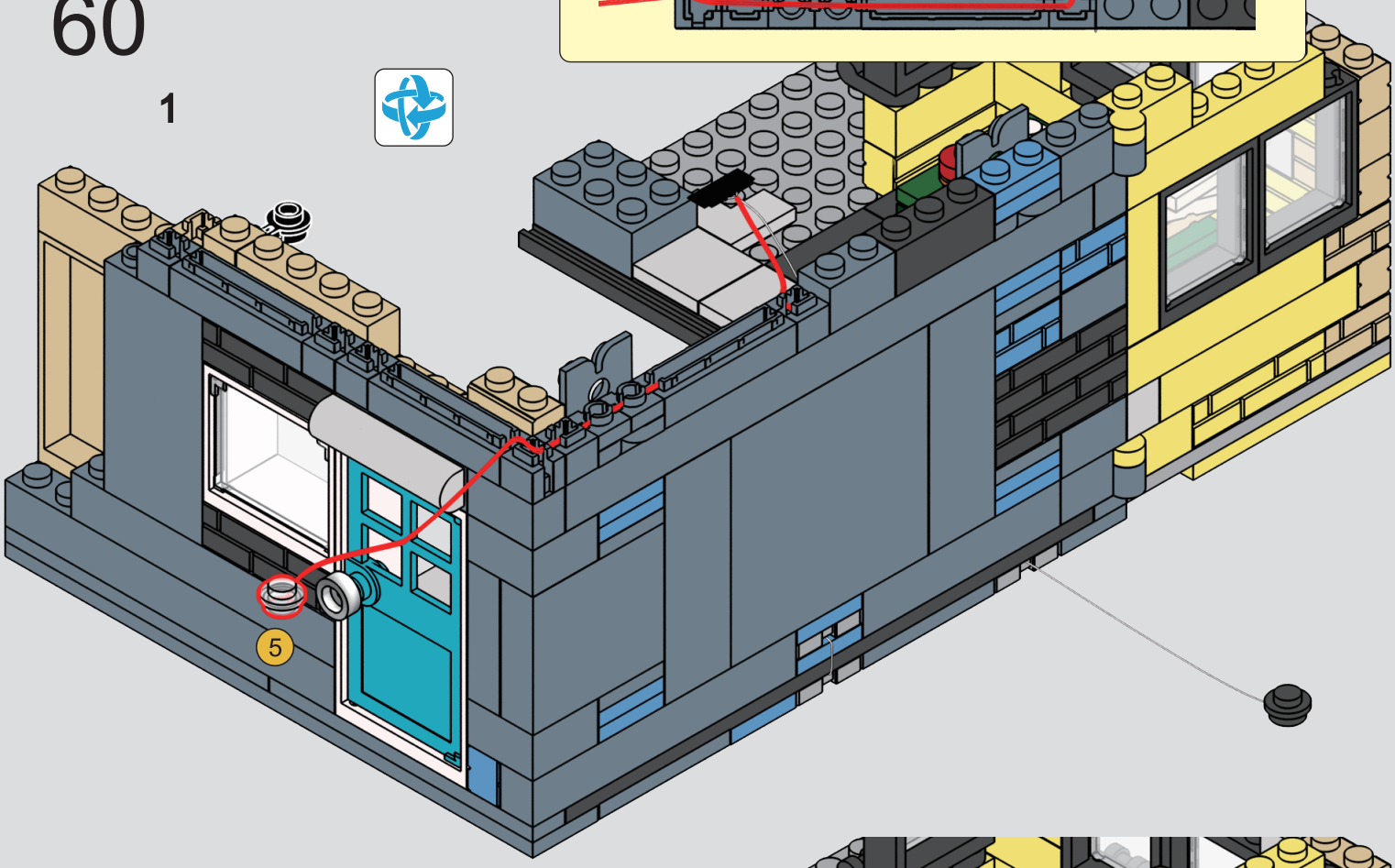

2

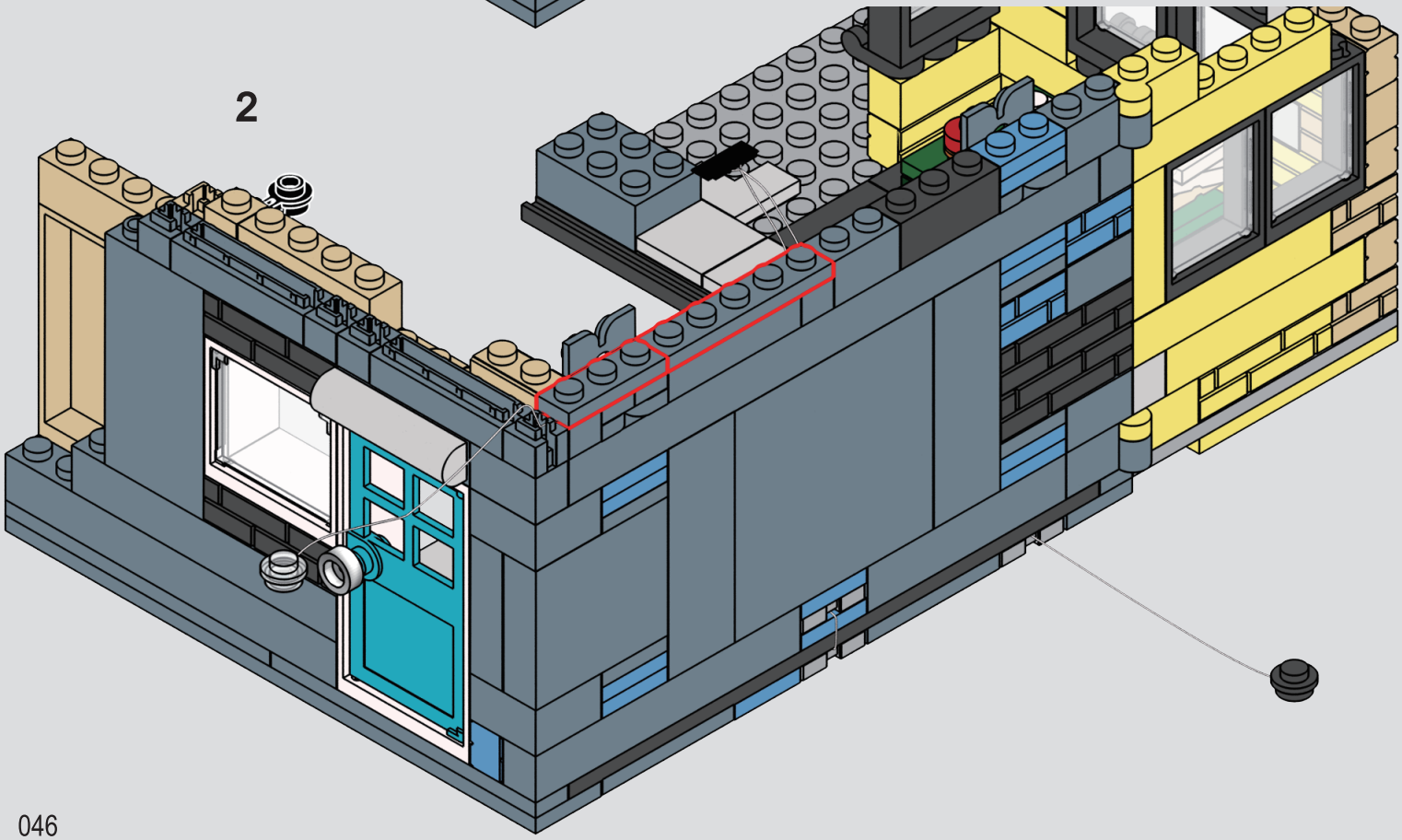

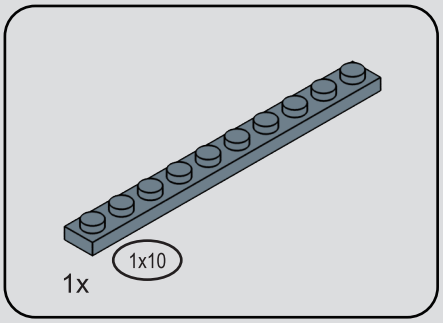

61

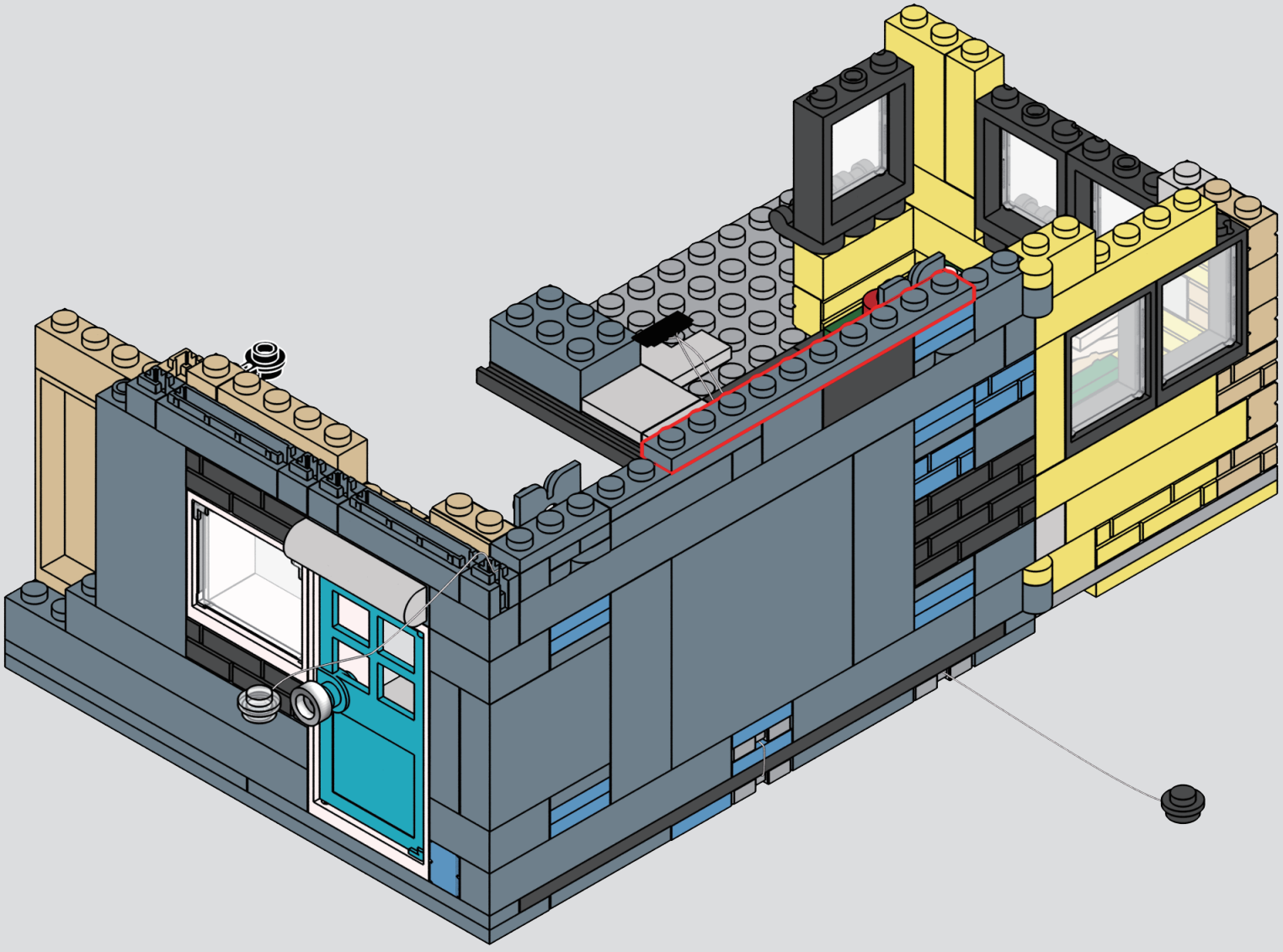

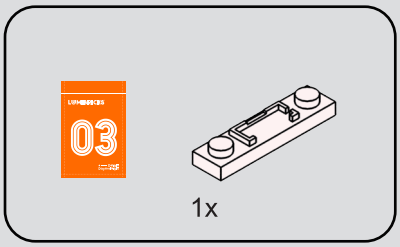

62

1

2

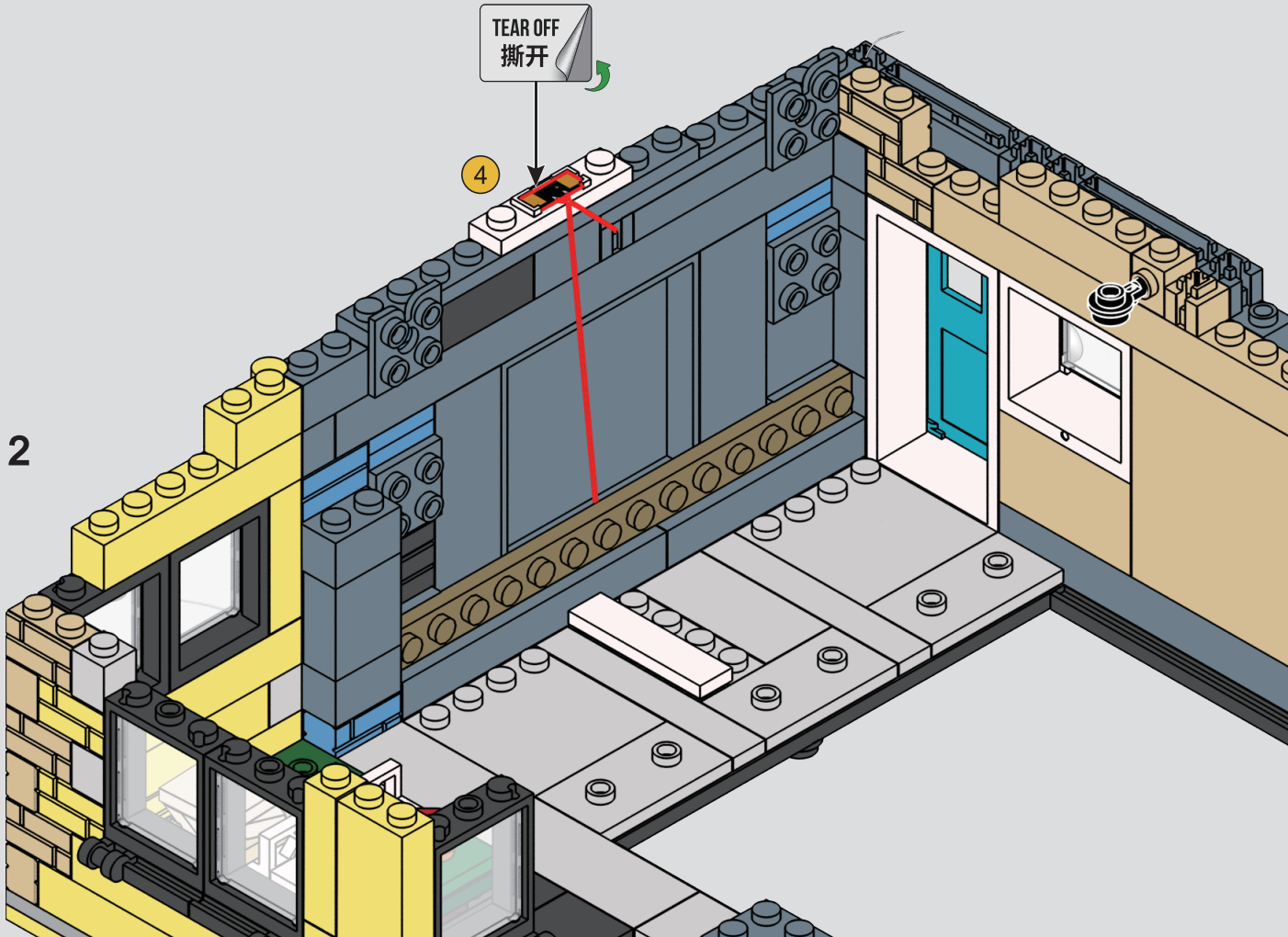

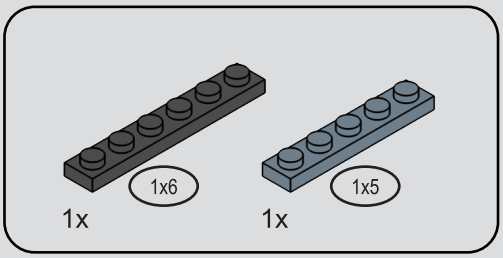

63

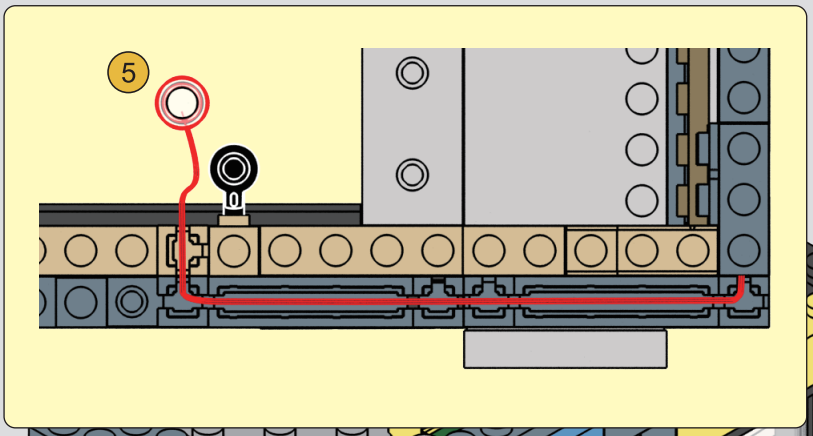

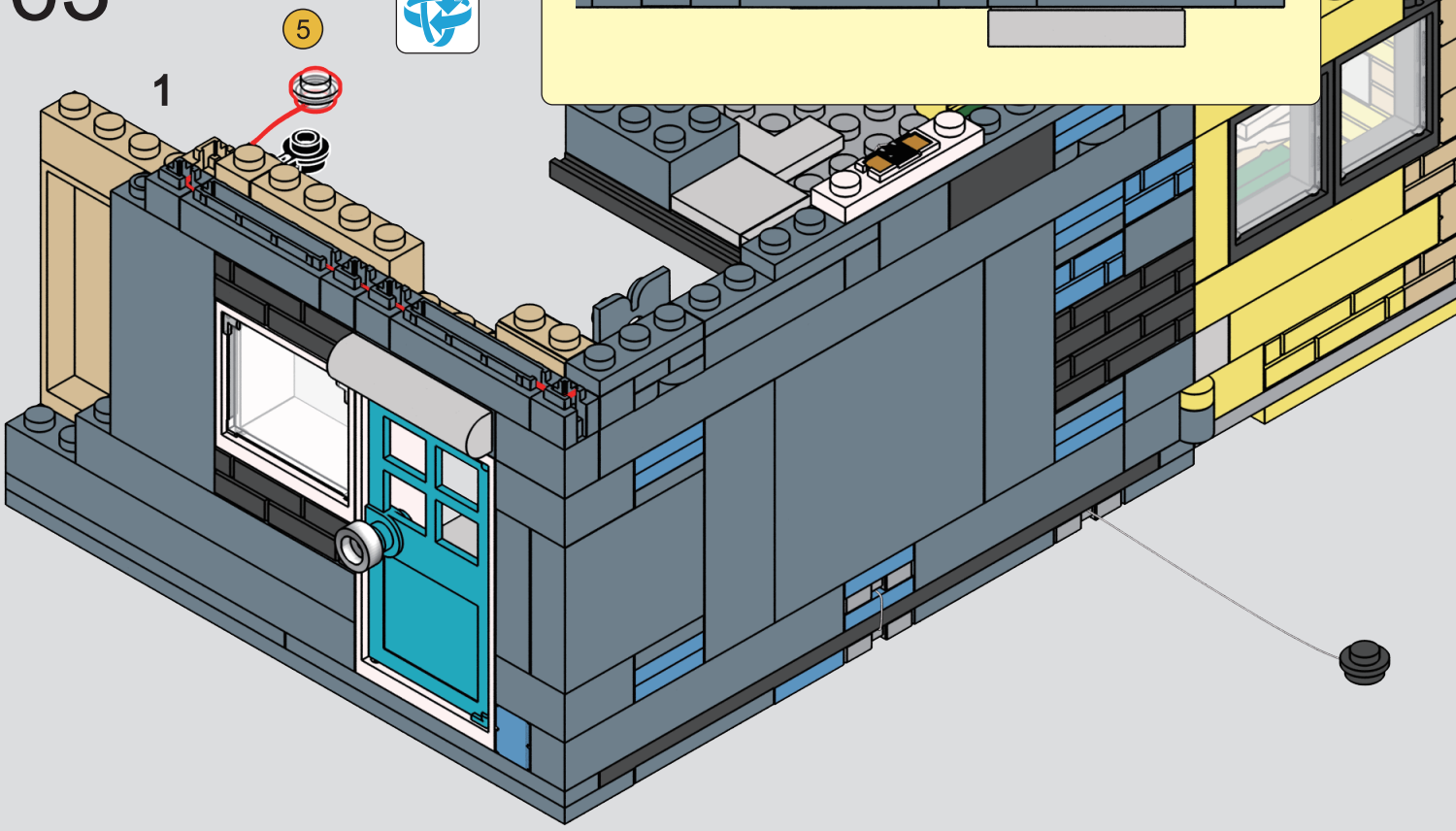

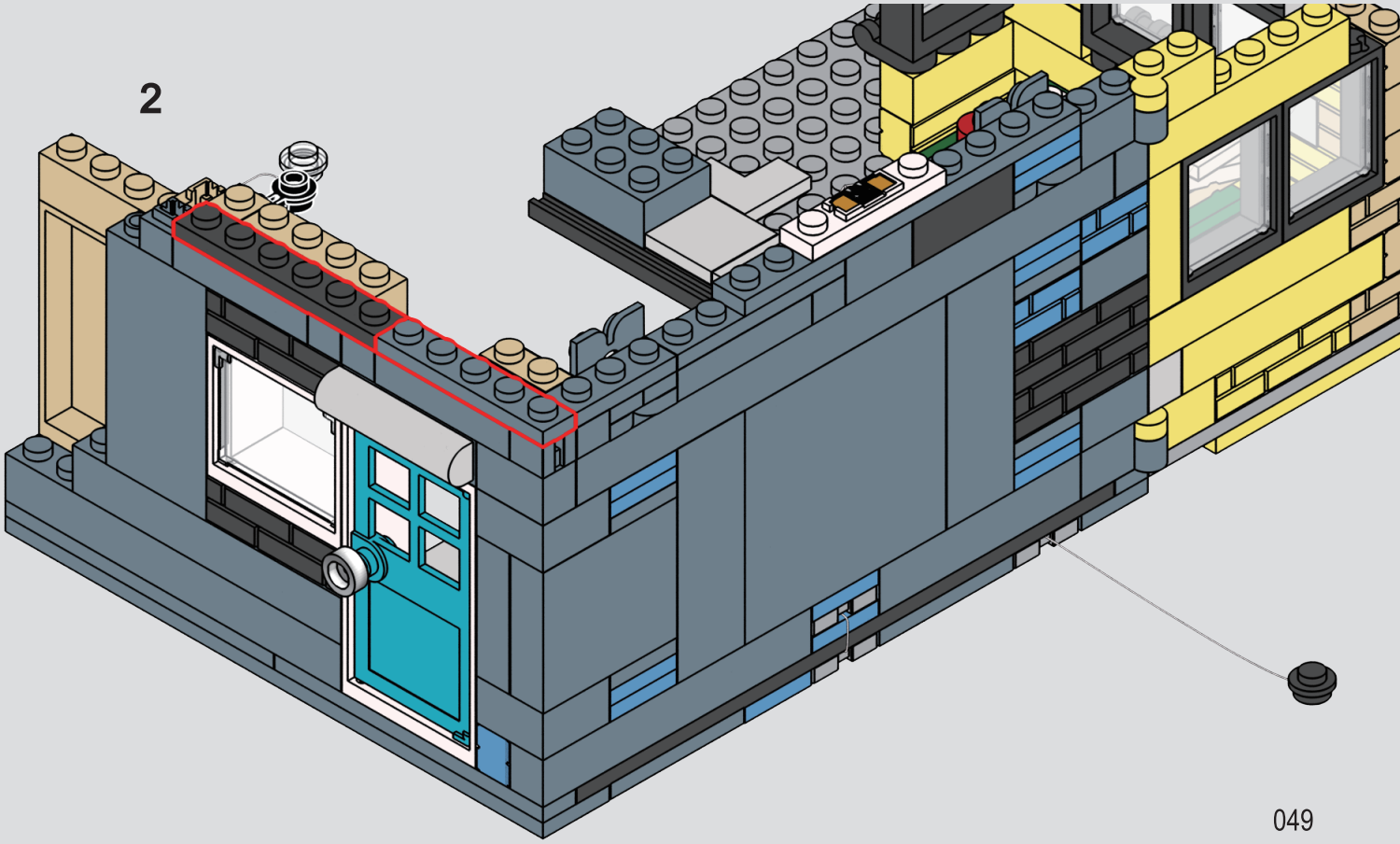

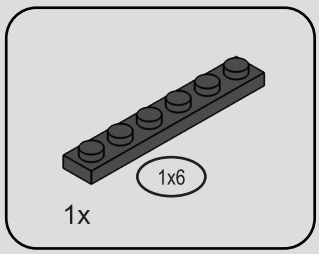

64

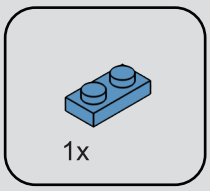

65

1

2

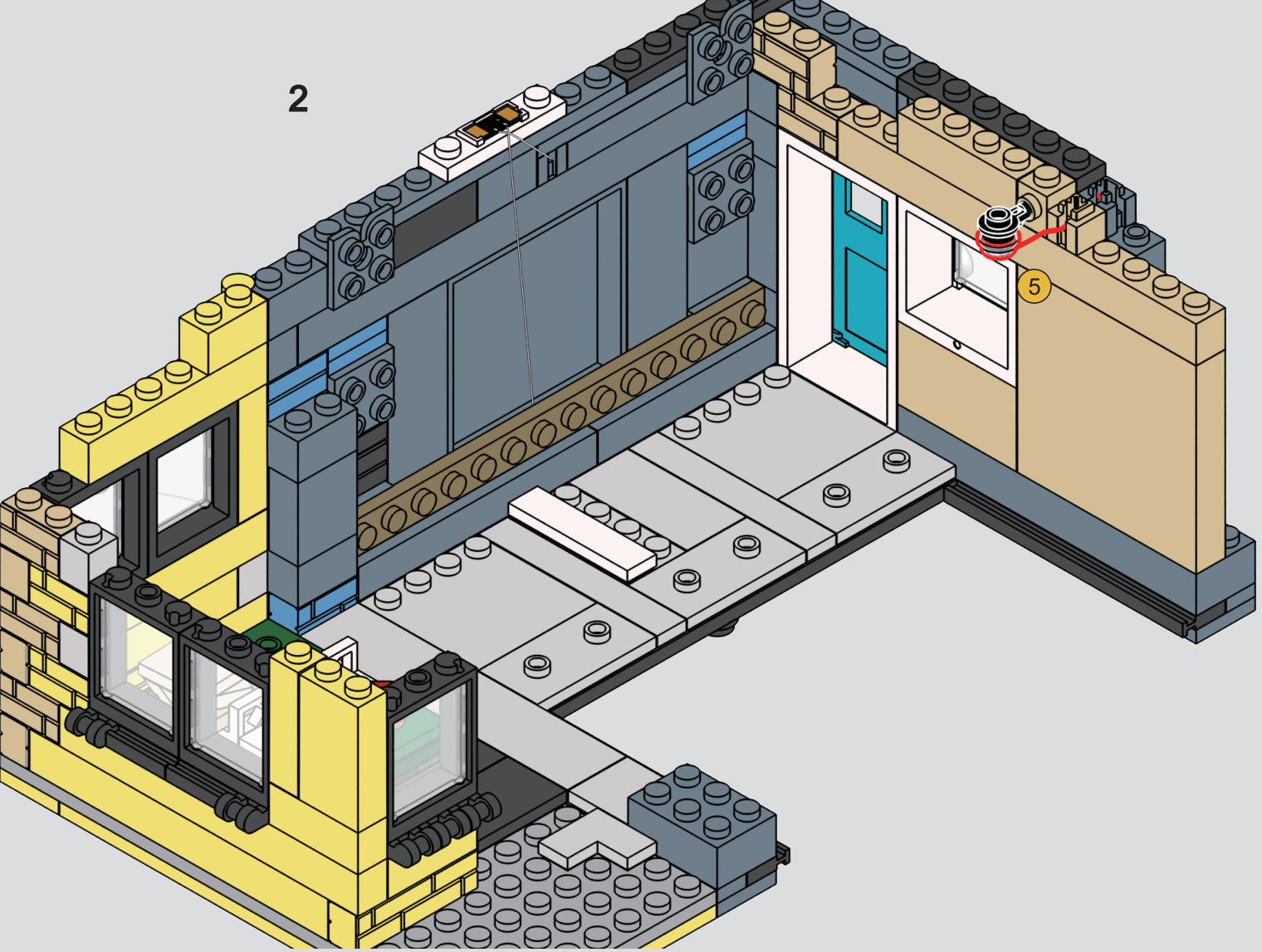

3

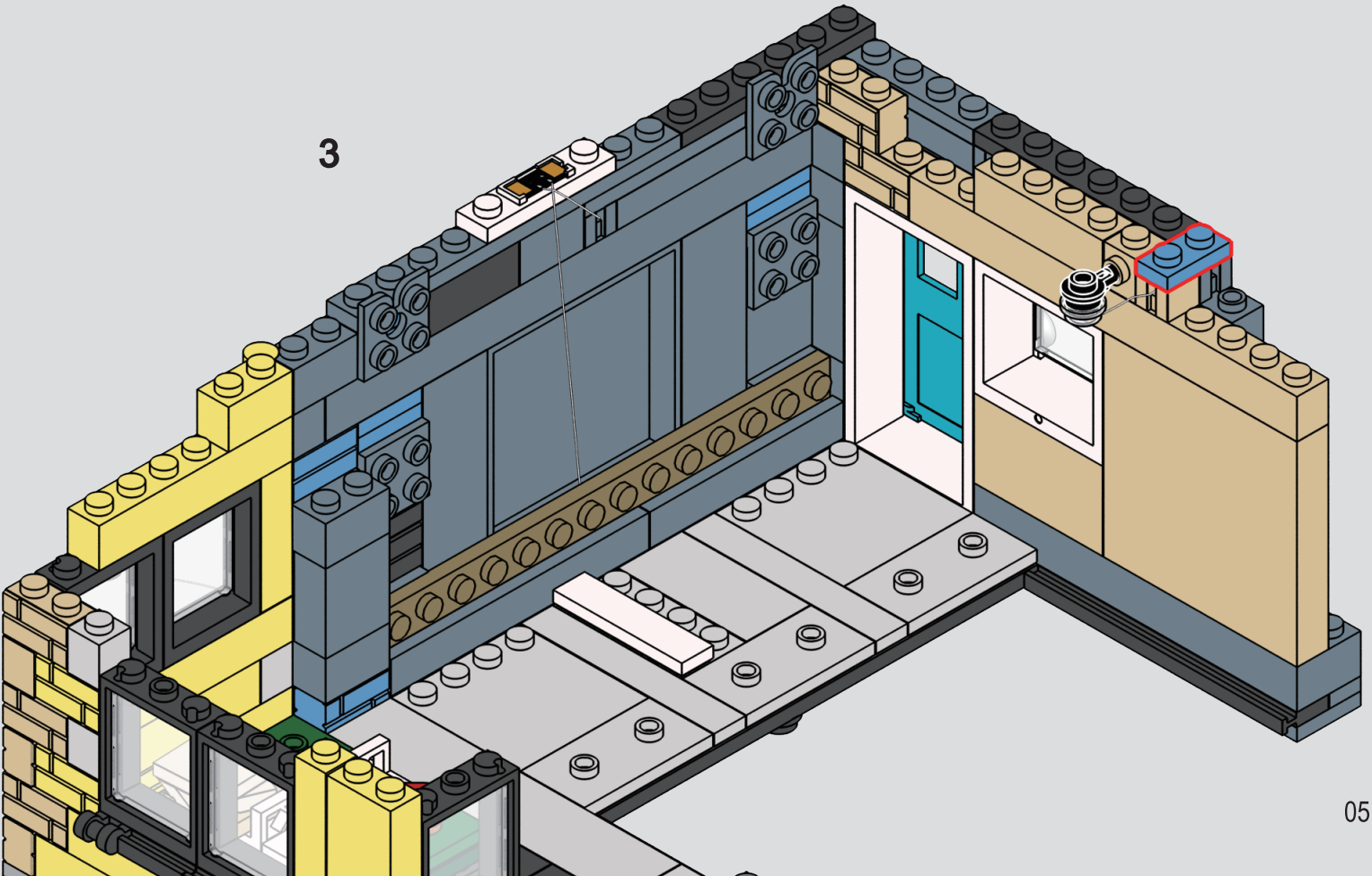

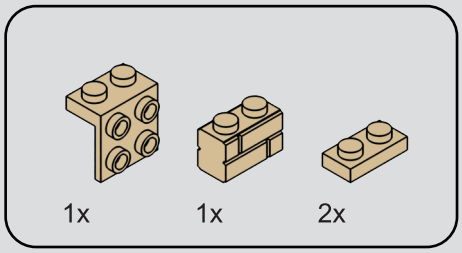

66

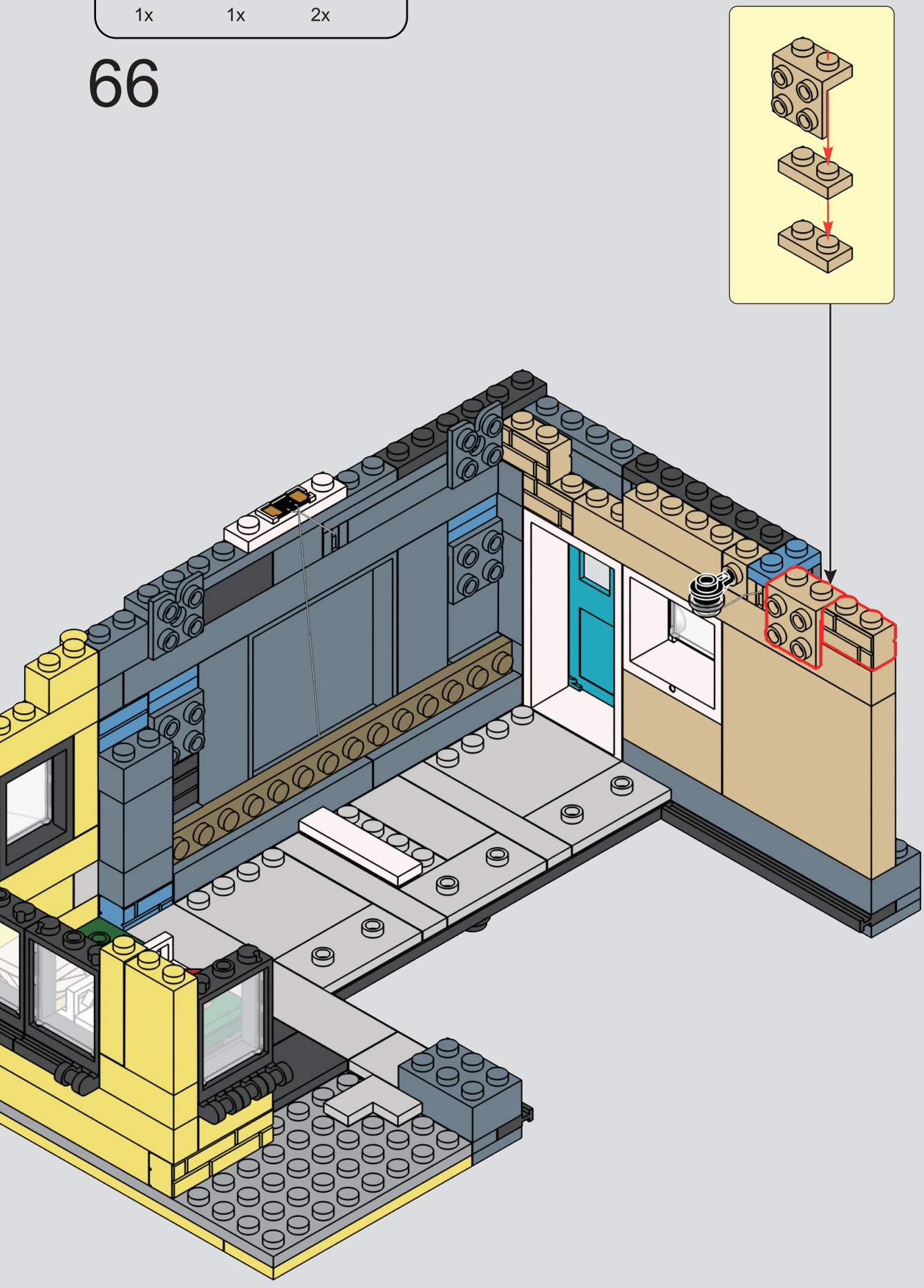

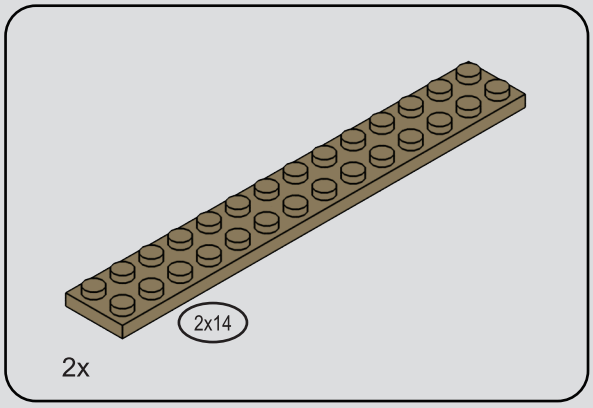

67

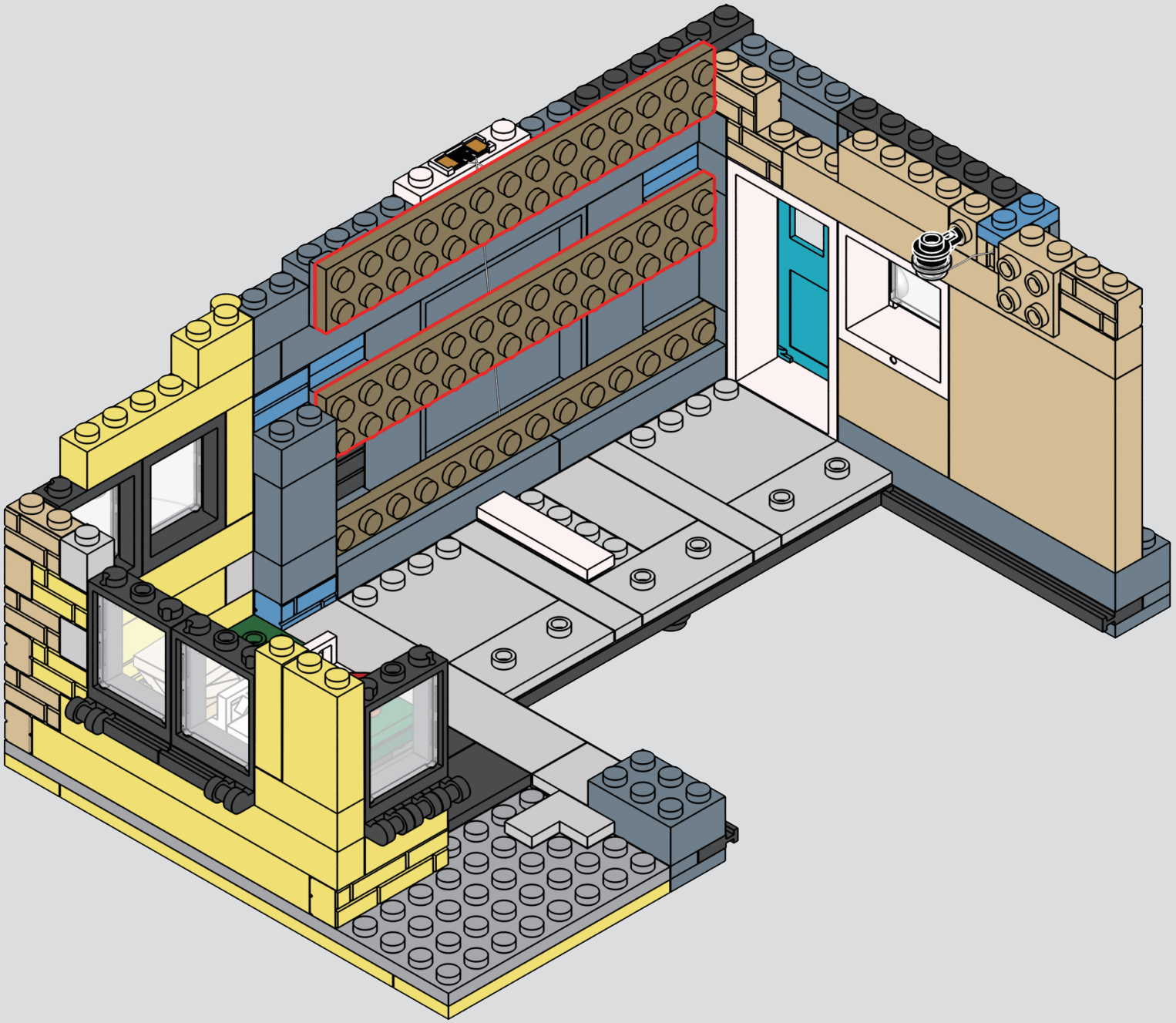

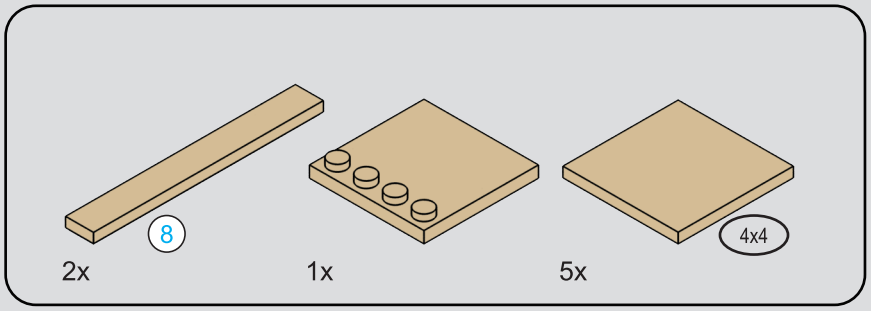

68

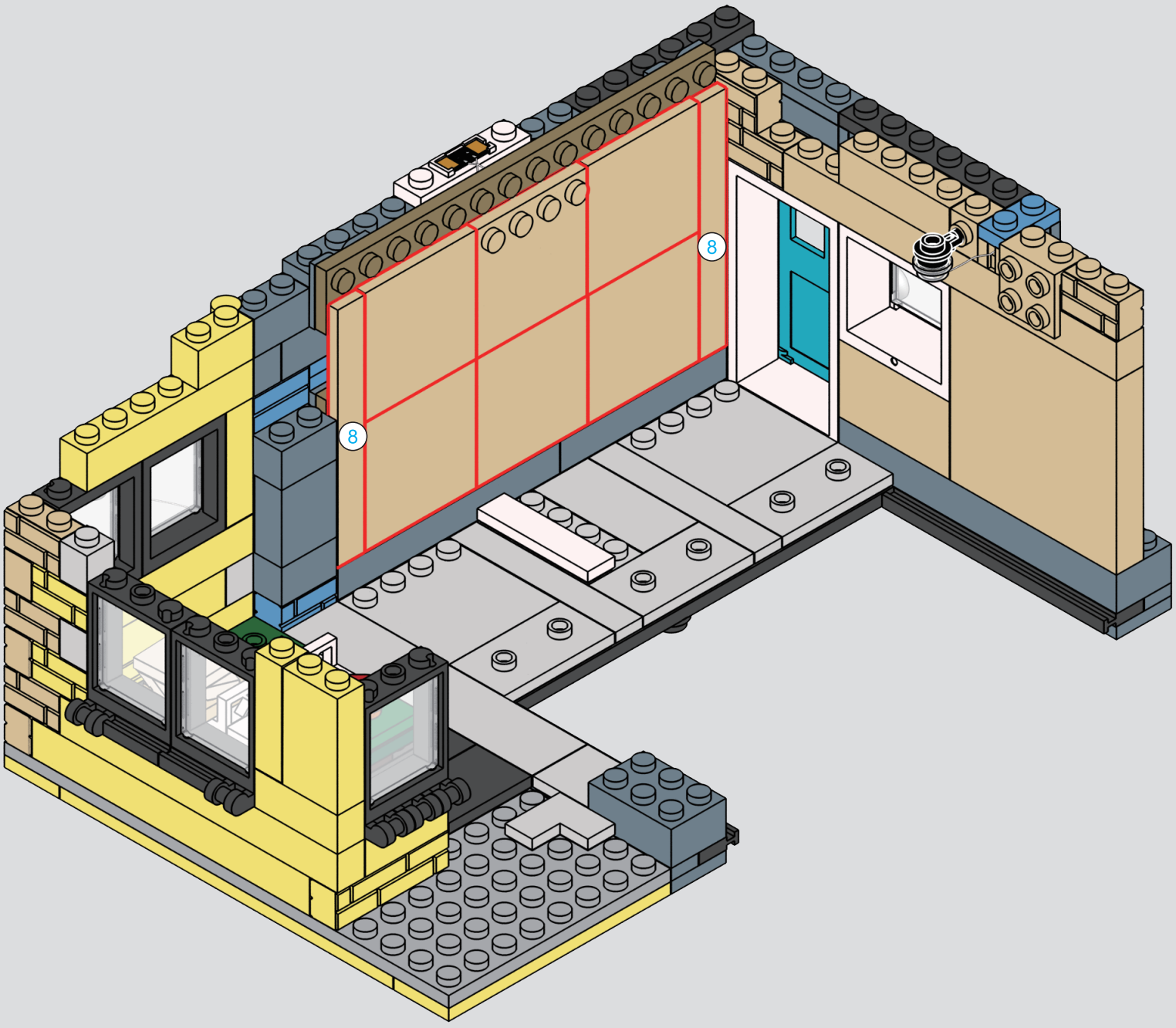



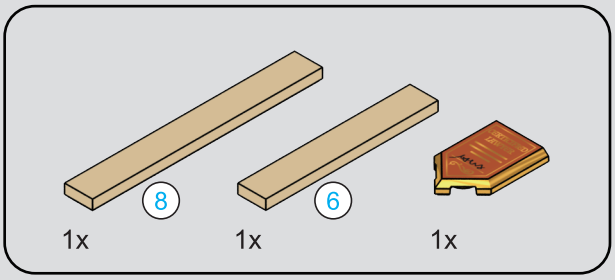





69

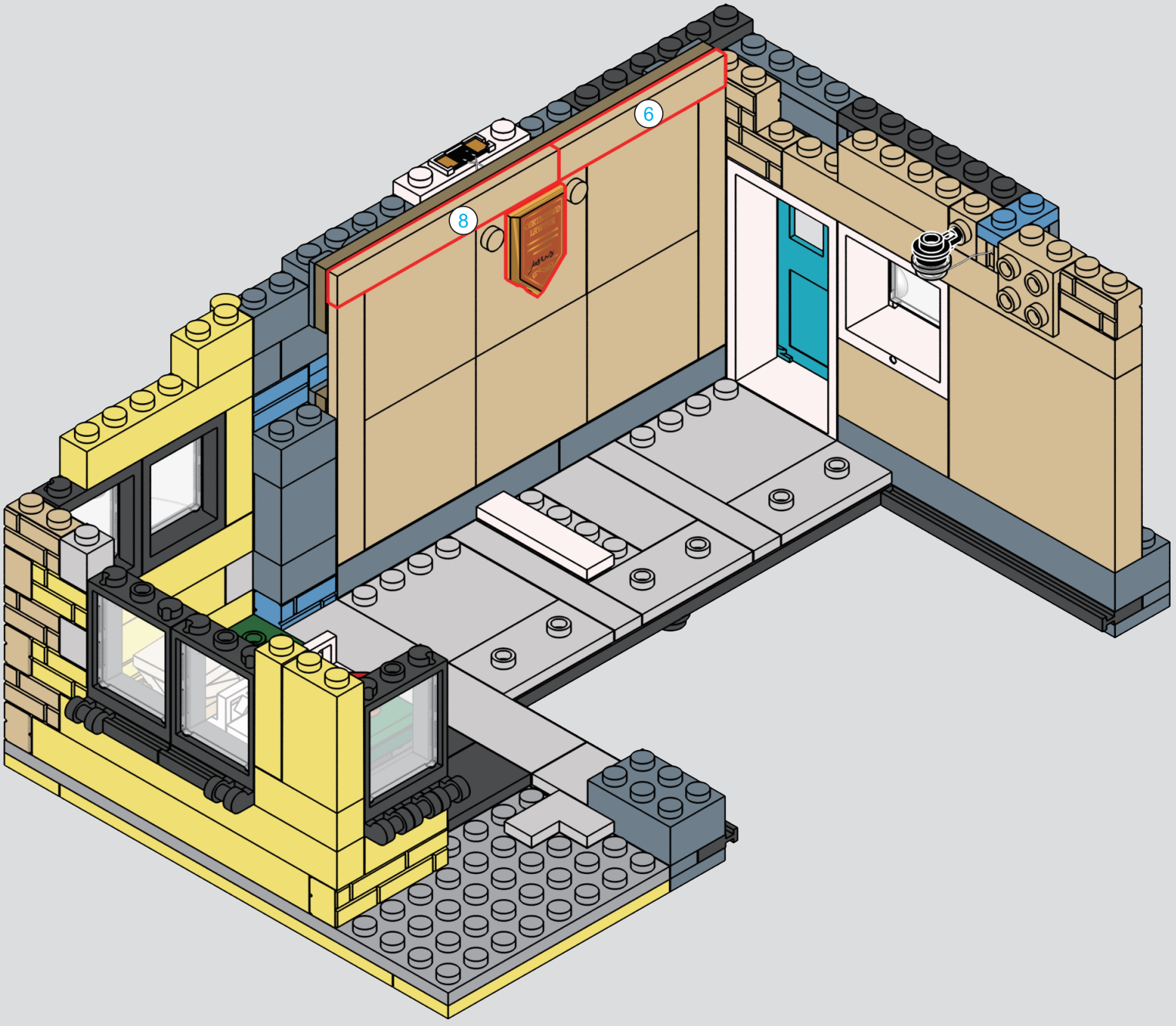

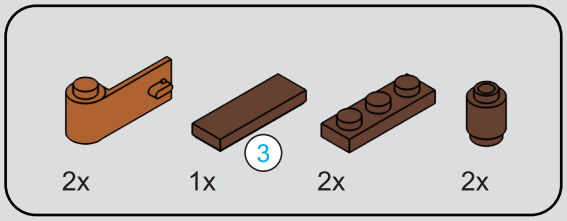

70

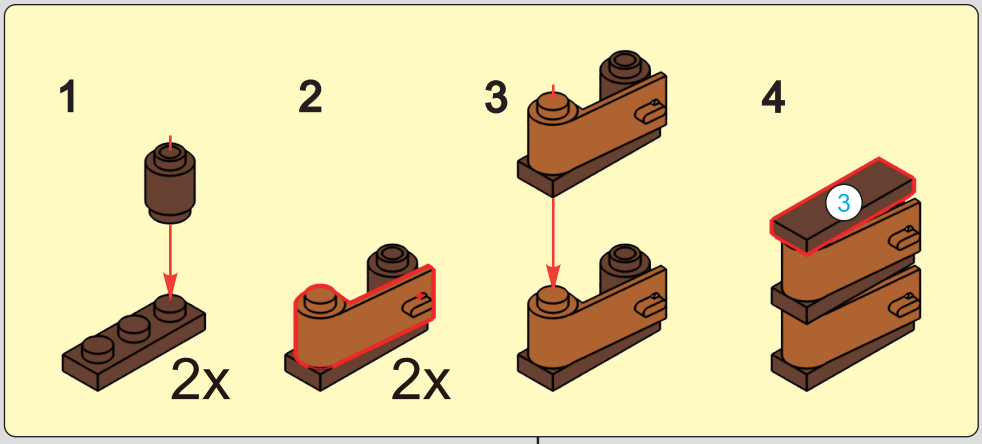

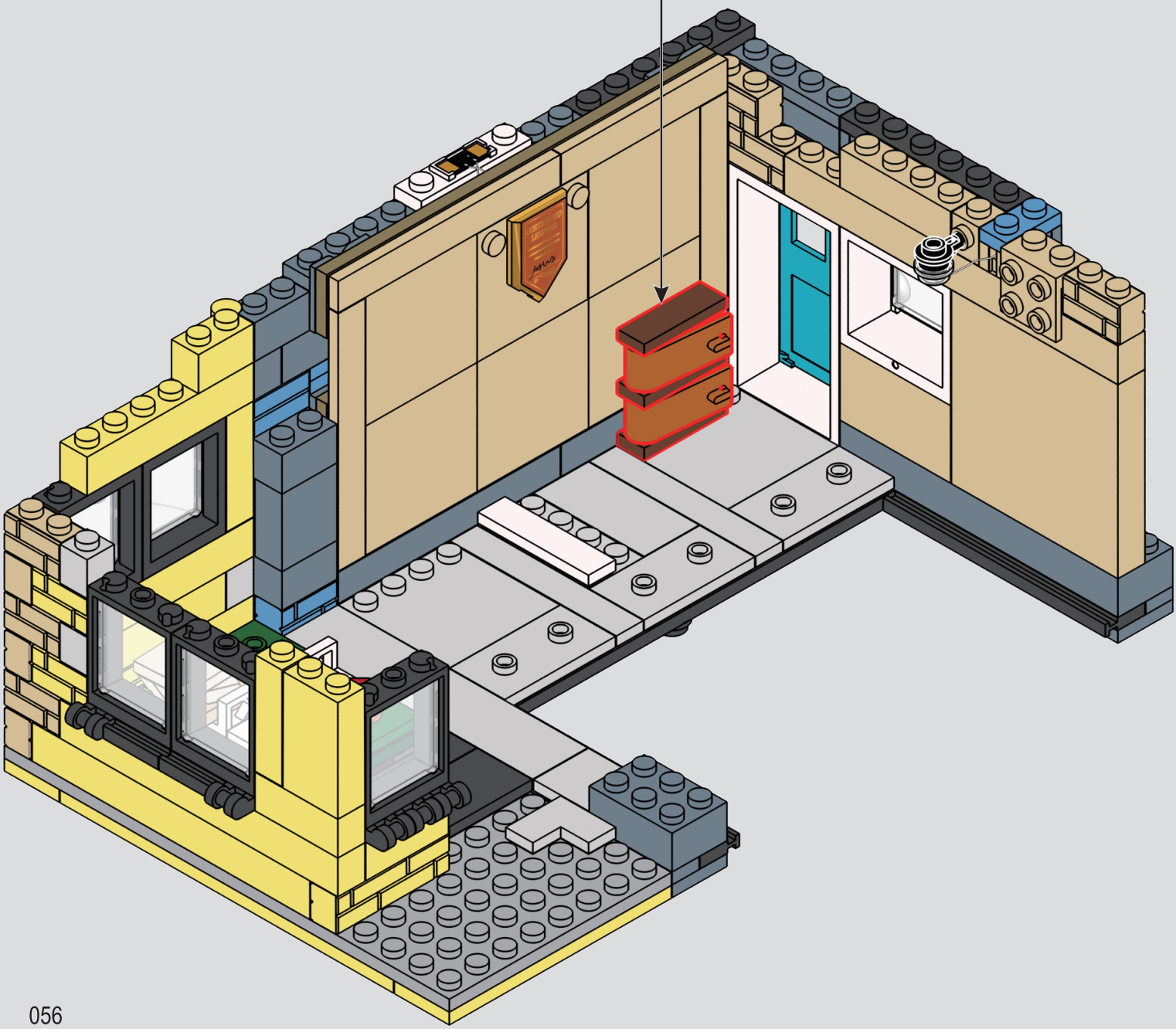

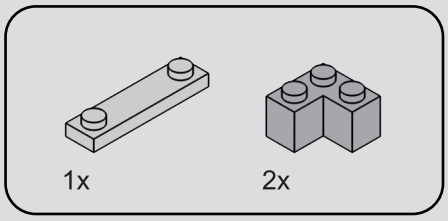

71

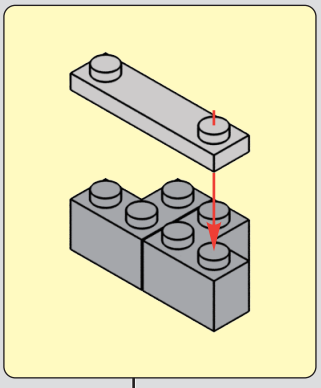

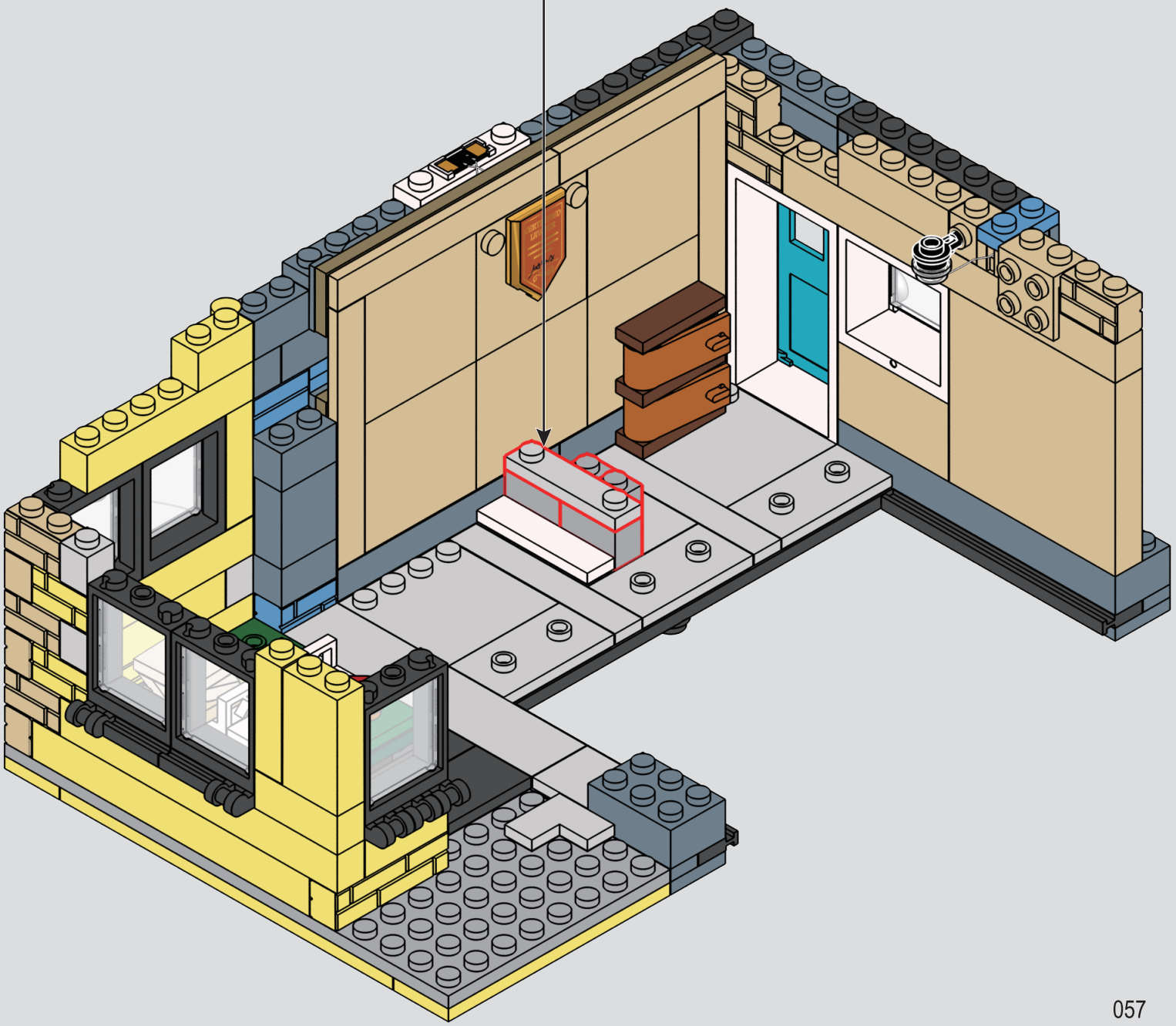

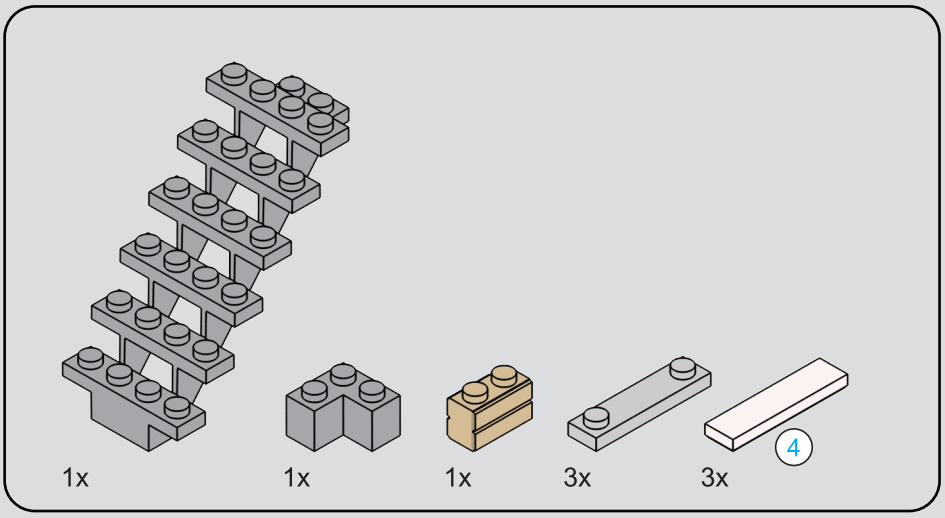



72

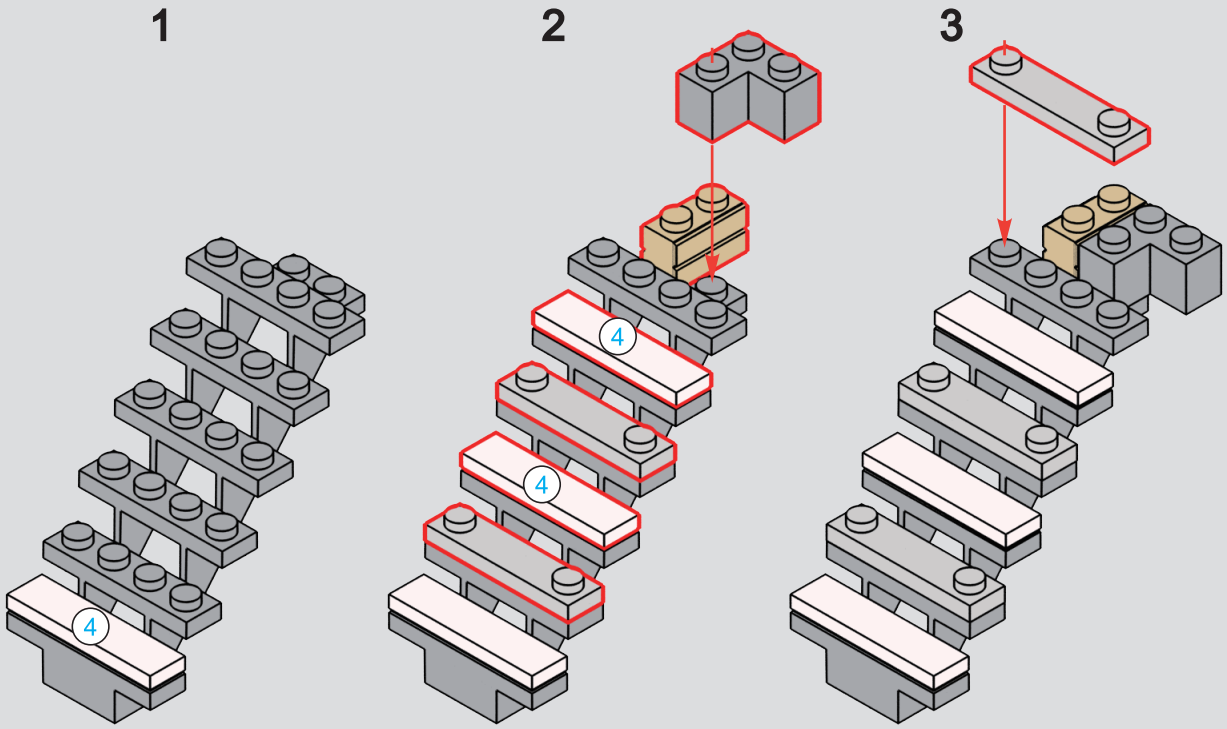

73

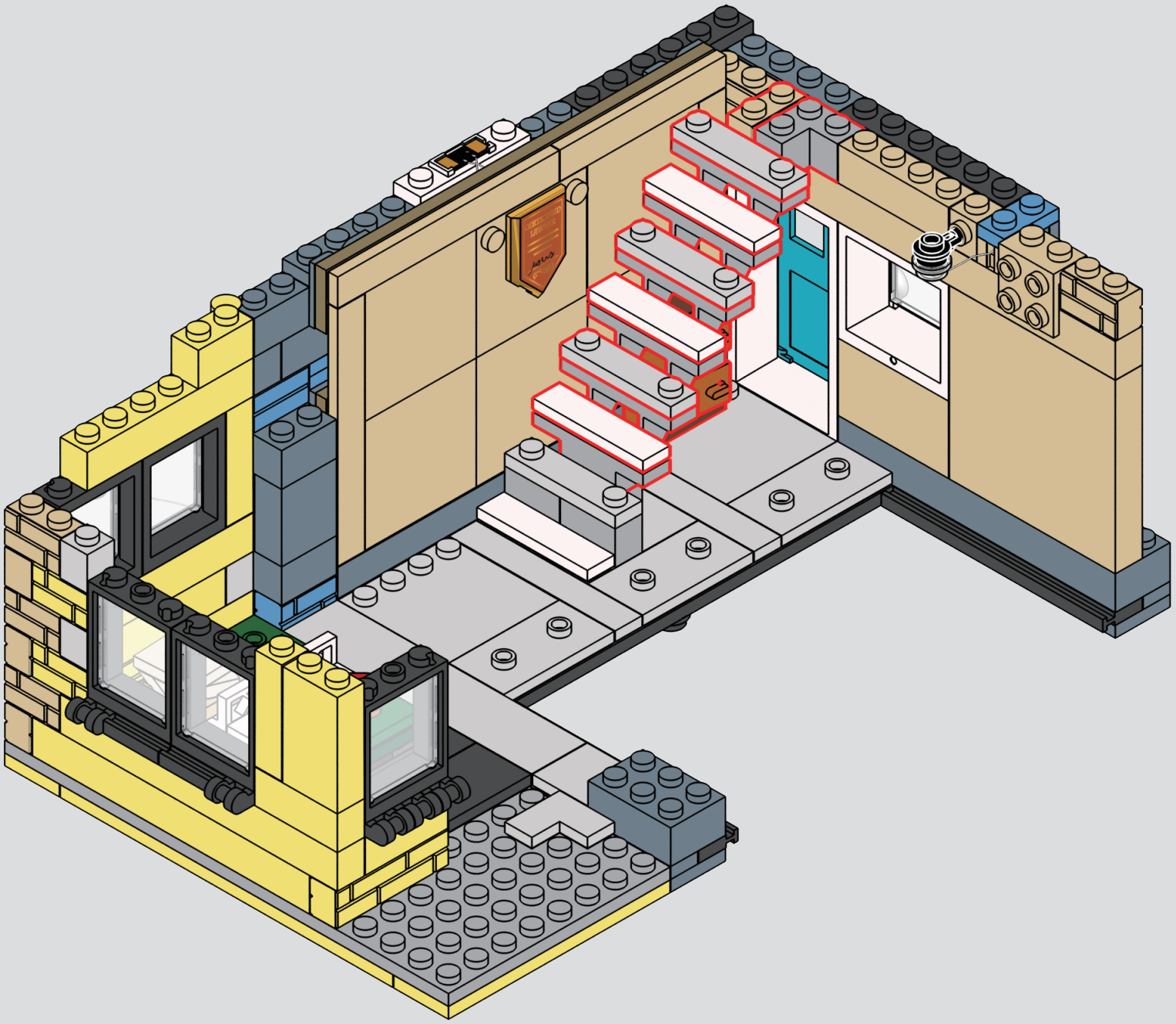

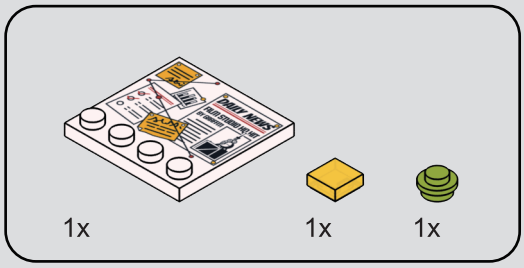

74

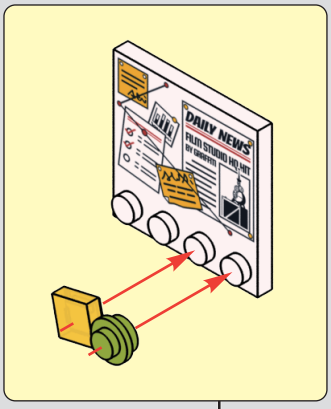

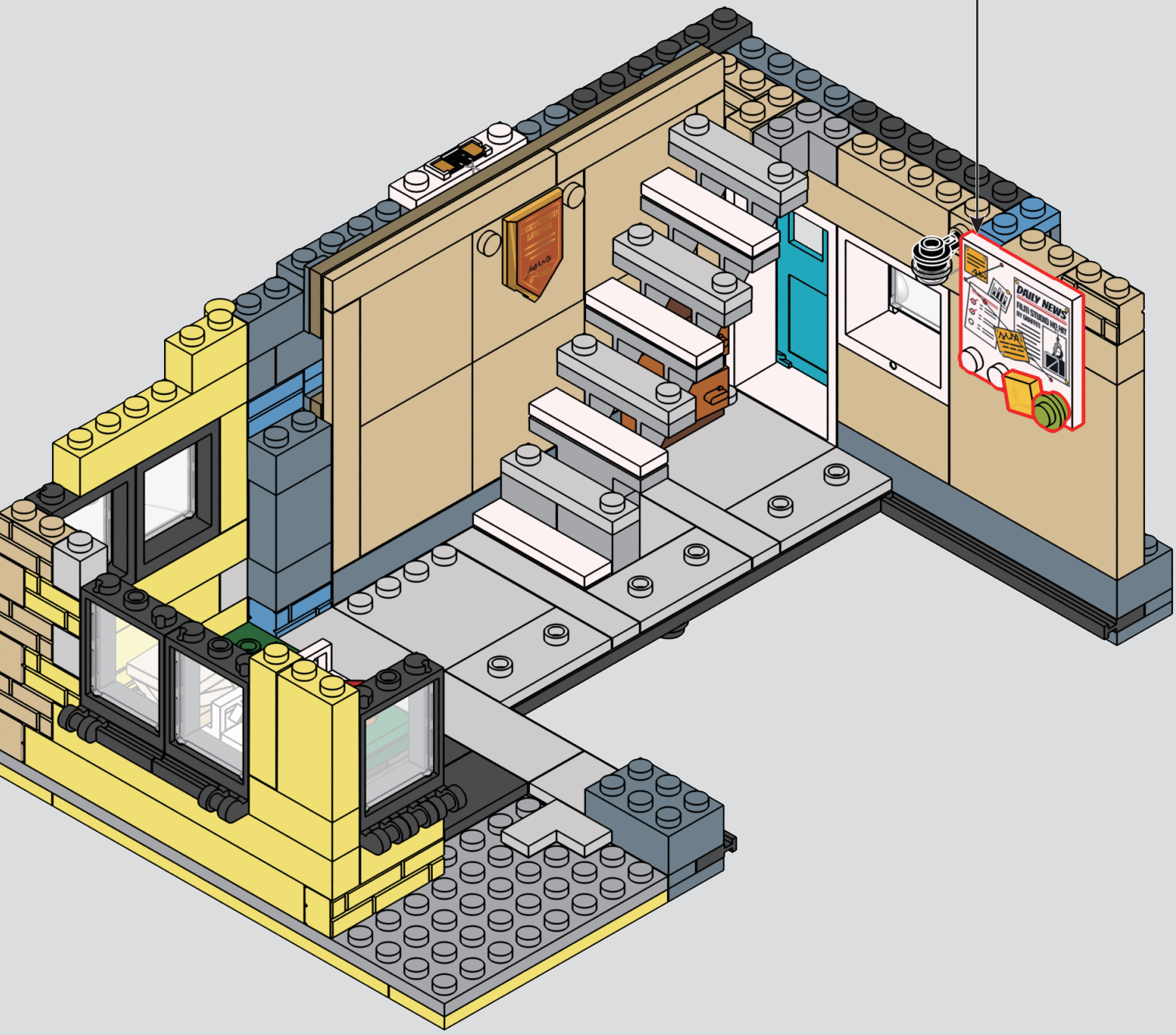

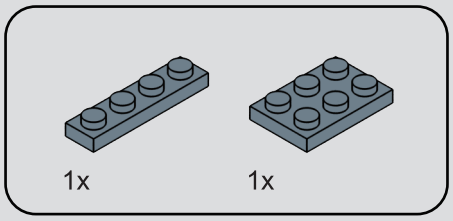

75

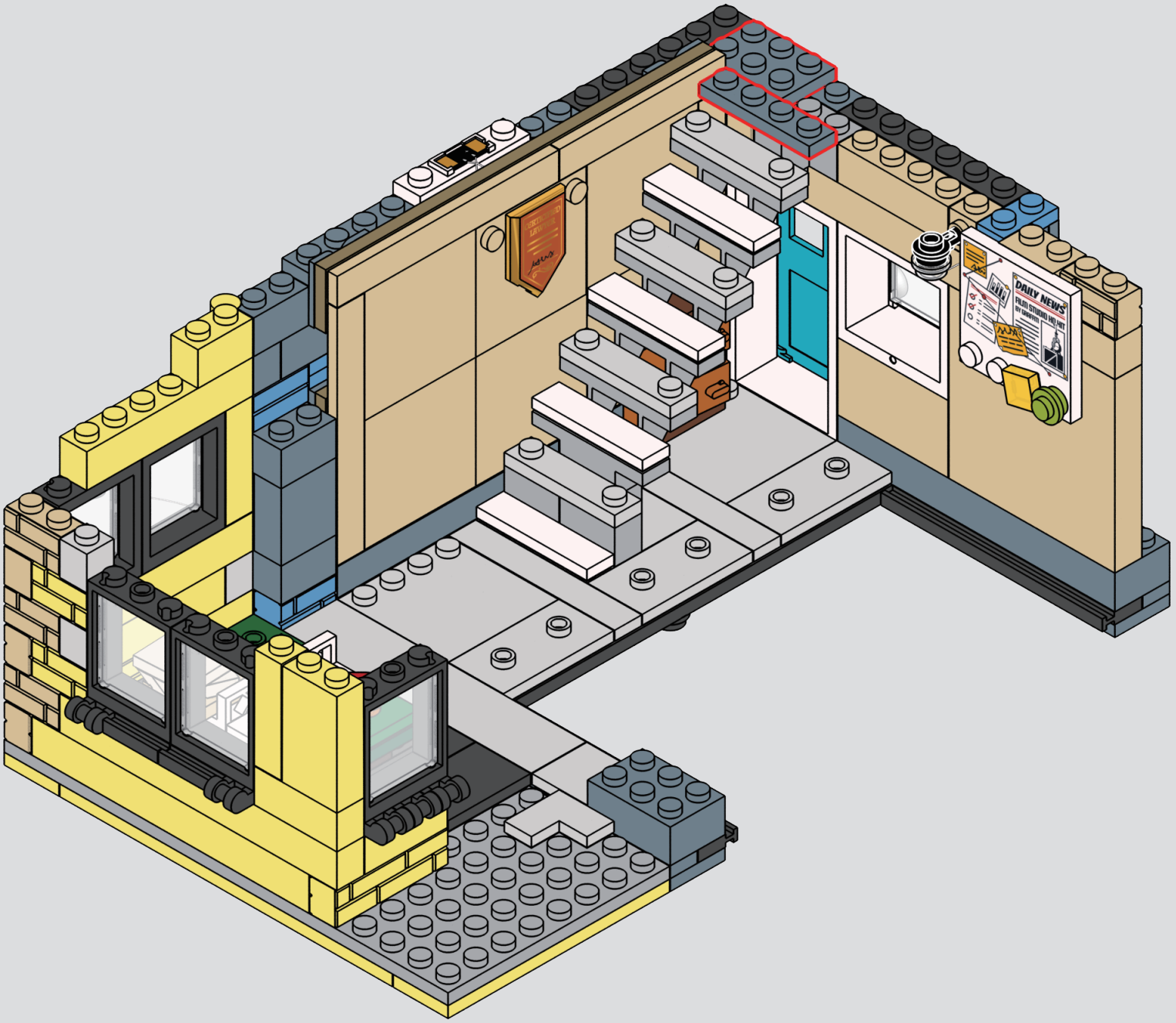

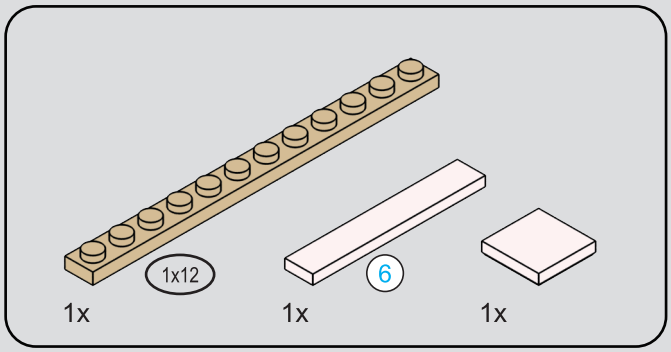



76

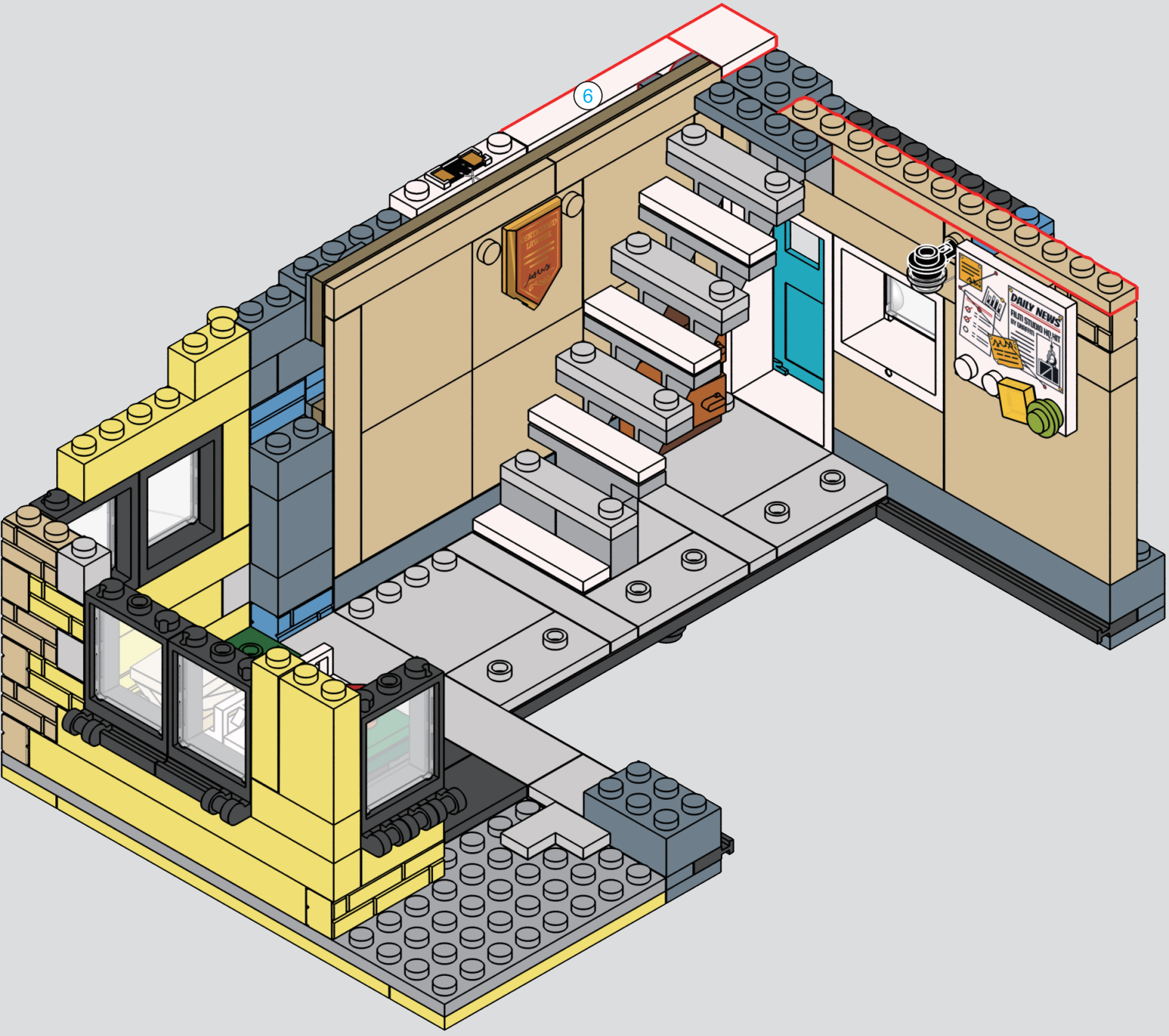

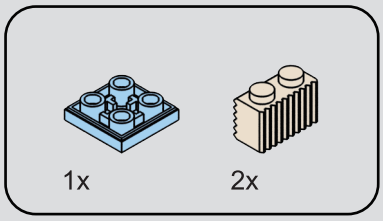

77

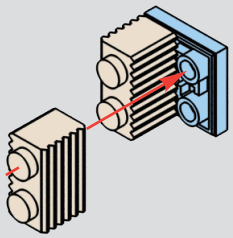

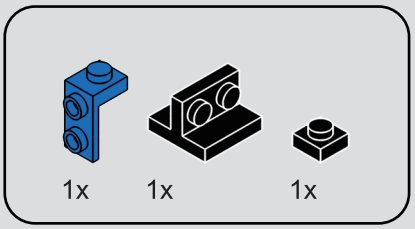

78

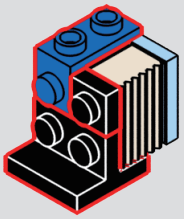

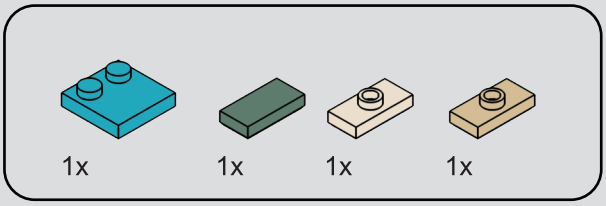

79

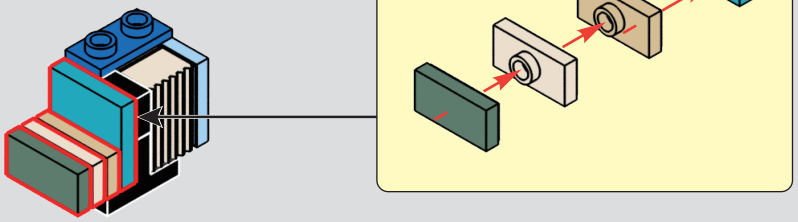

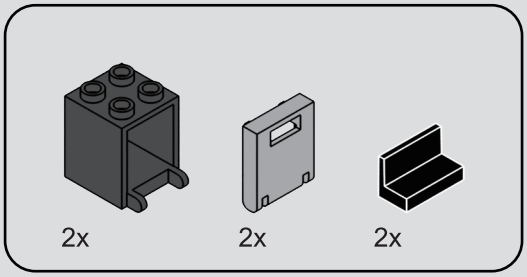

80

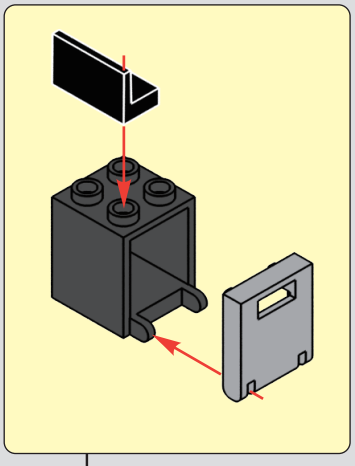

1

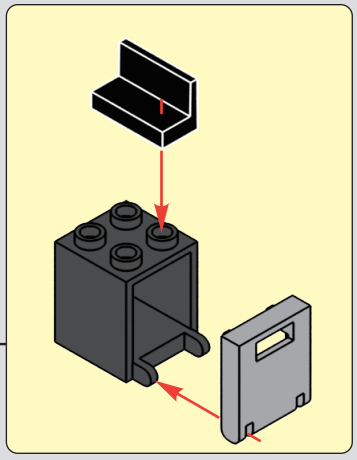

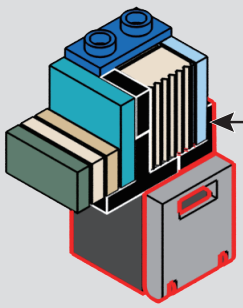

2

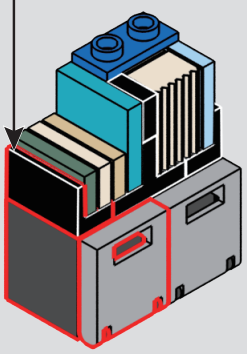

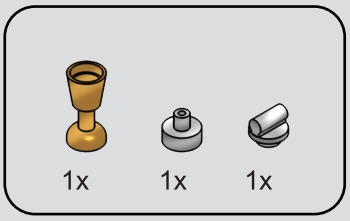

81

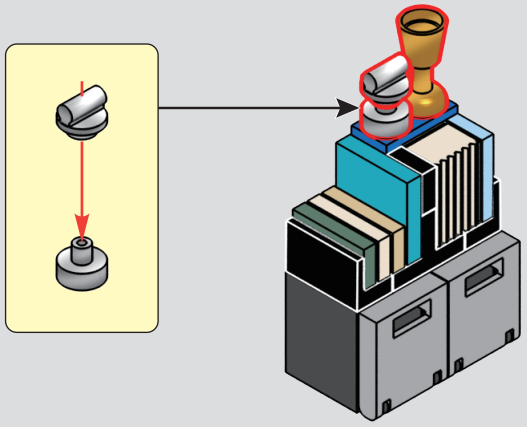

82

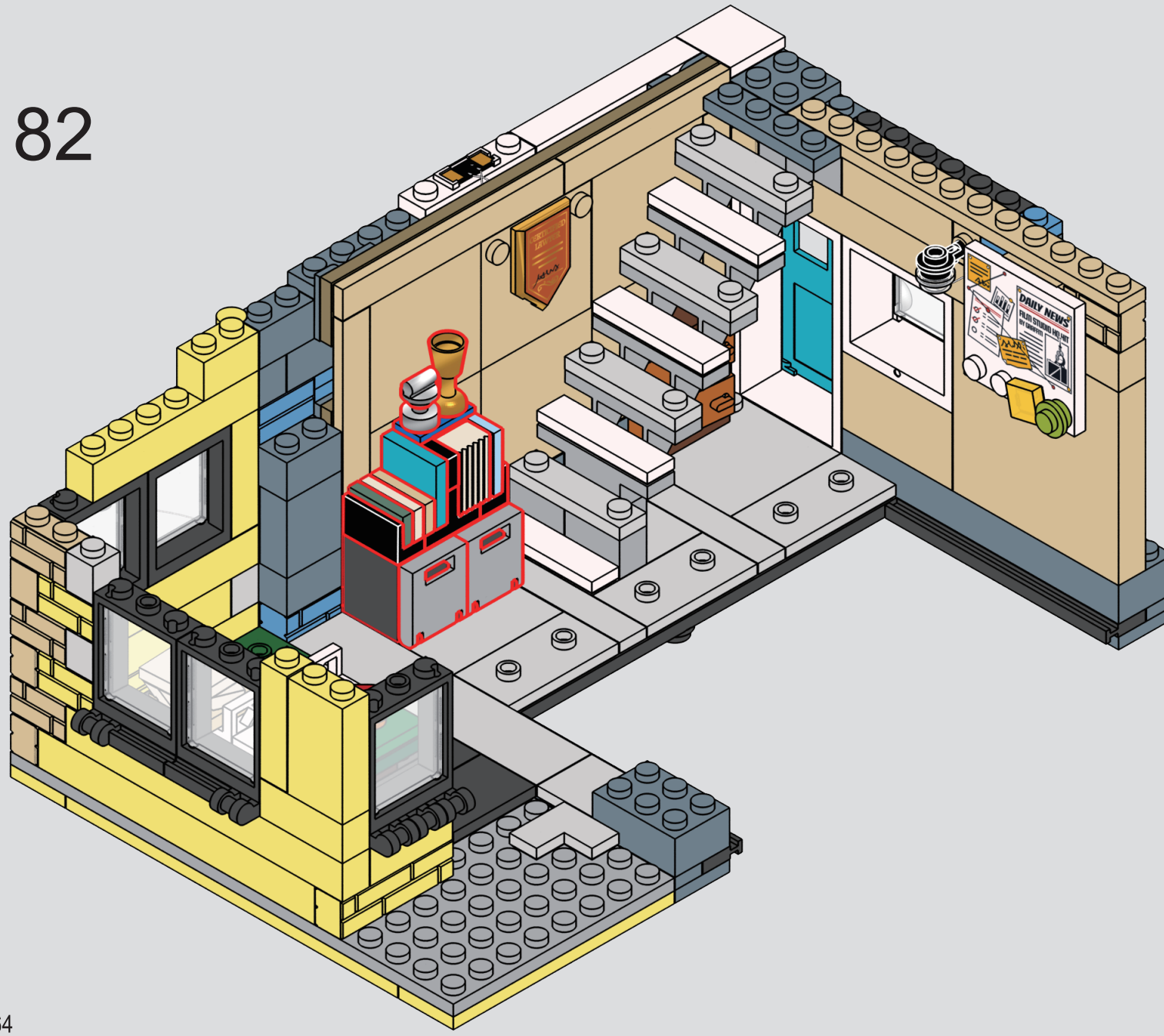

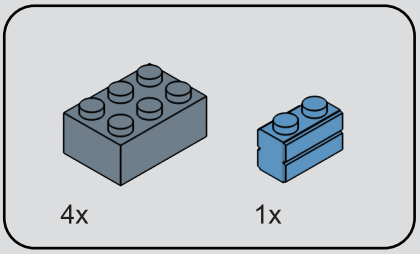

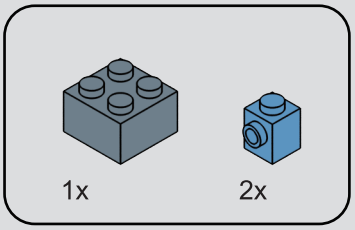

83

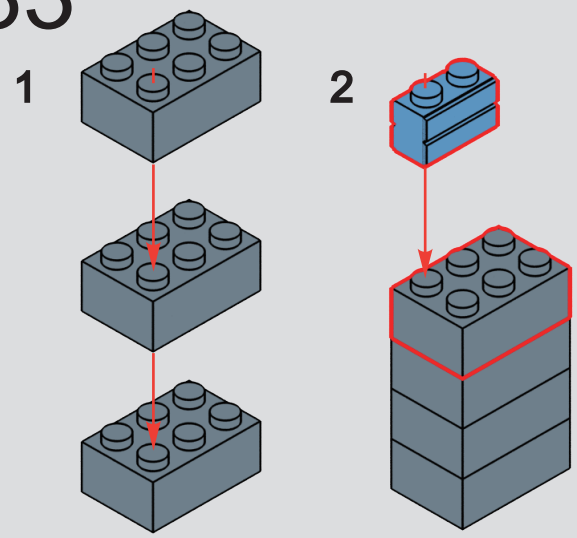

84

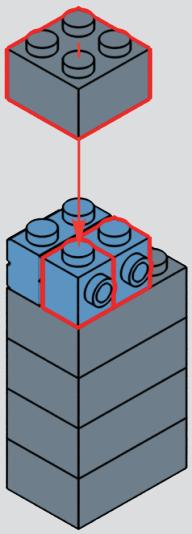

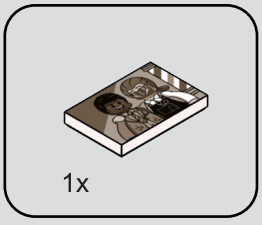

85

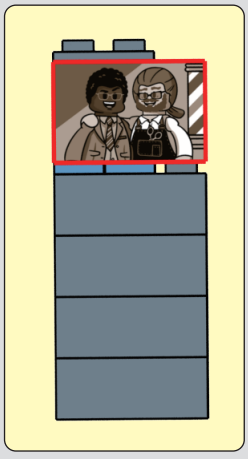

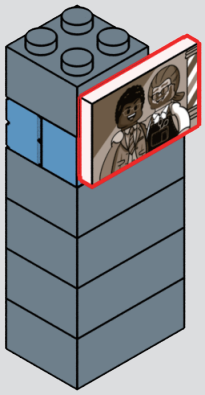

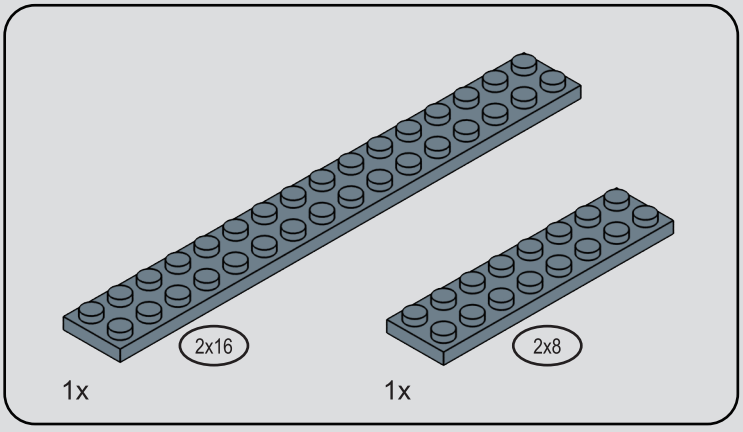

86

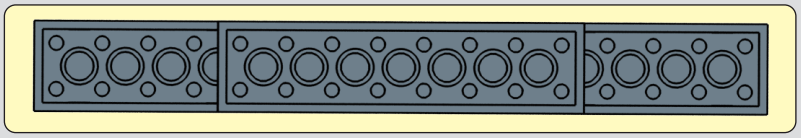

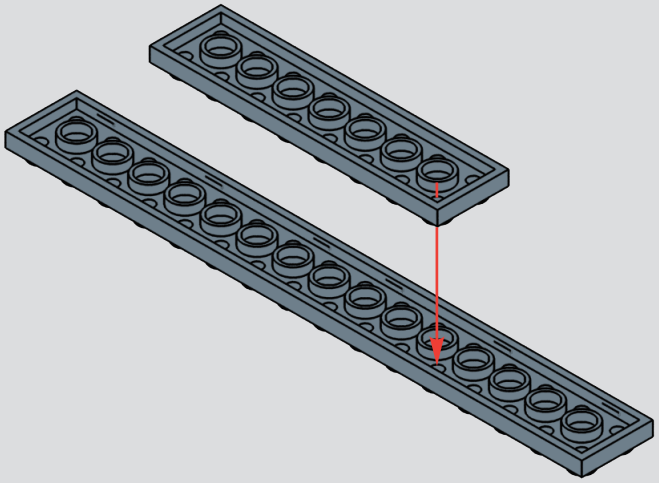

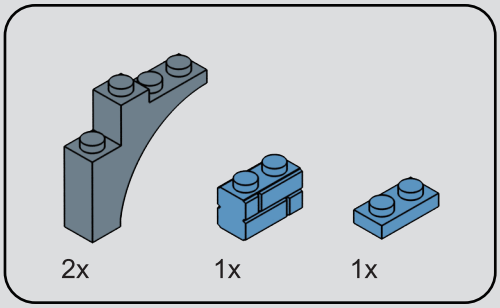

87

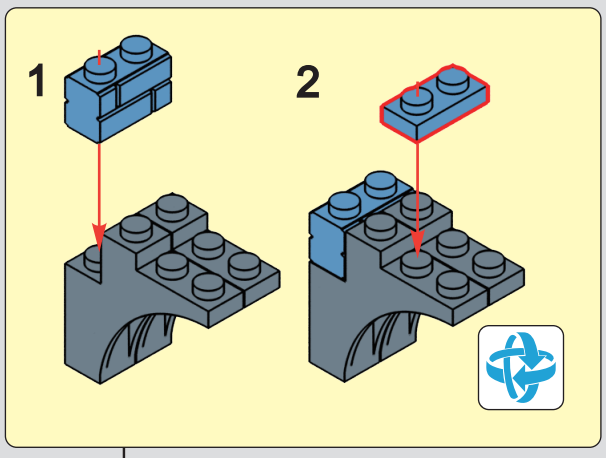

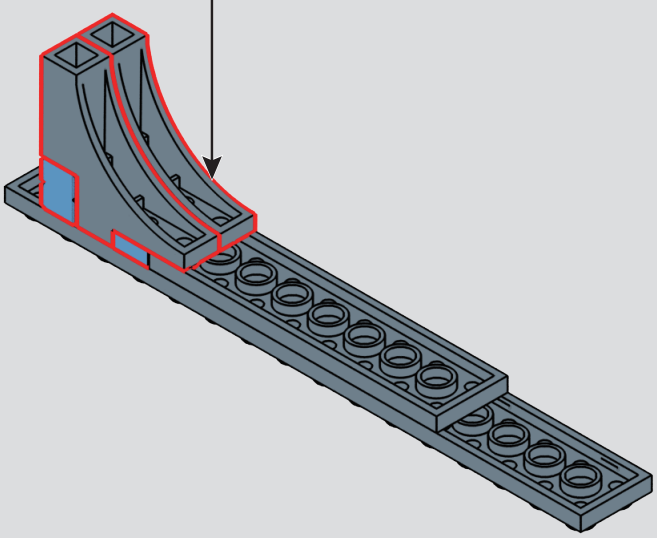

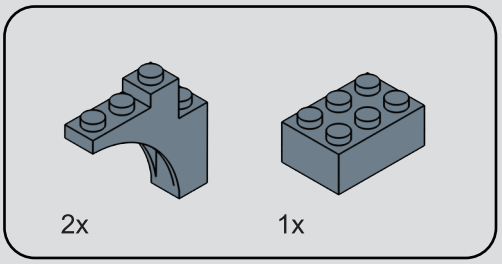

88

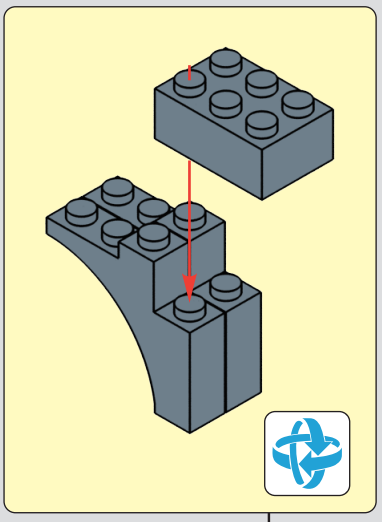

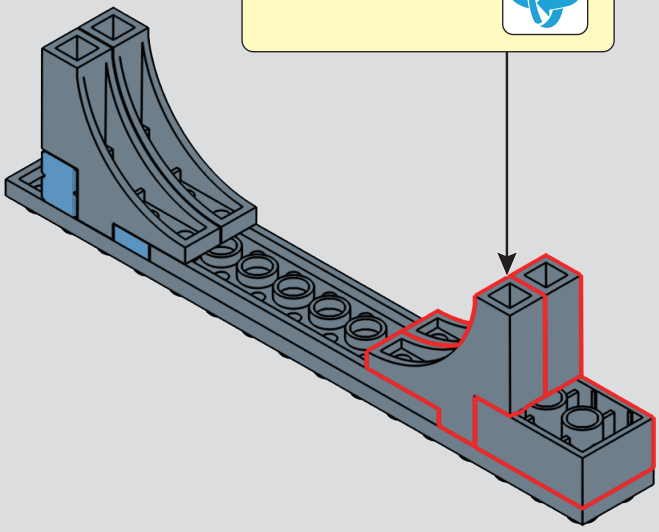

89

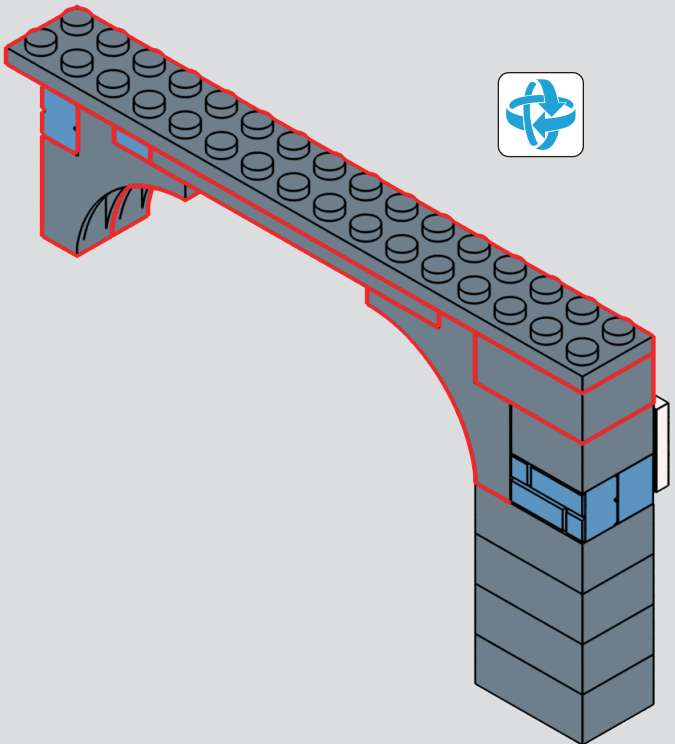

90

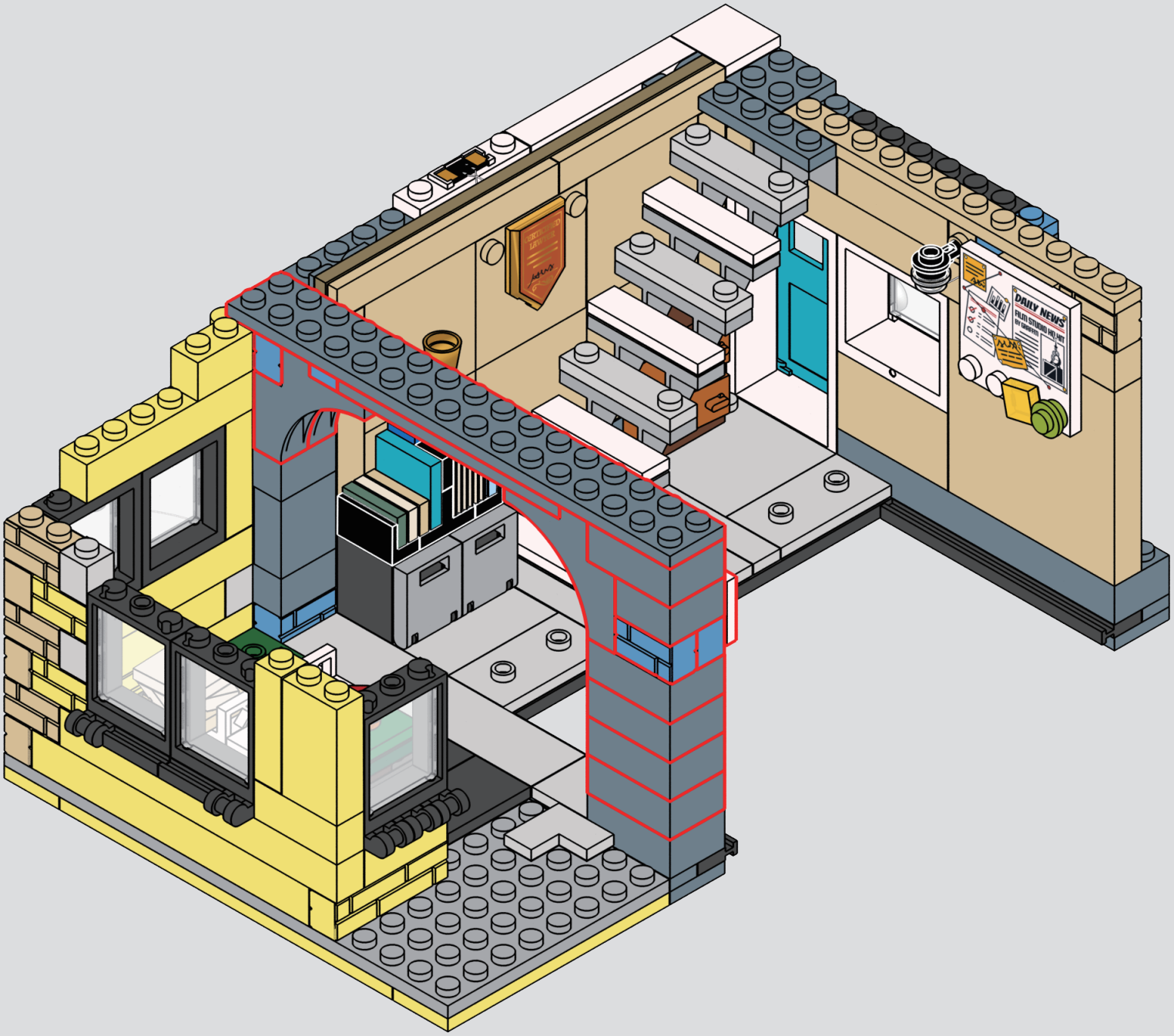

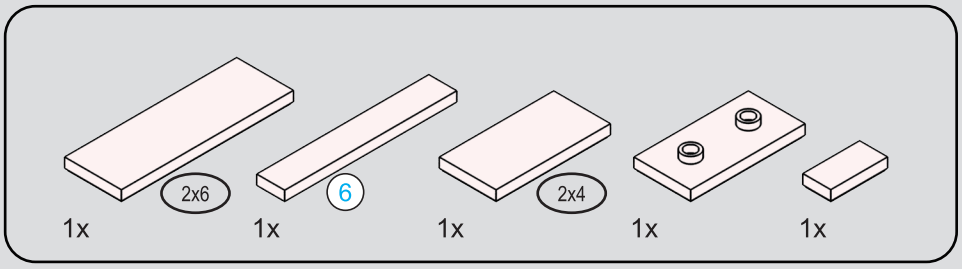

91

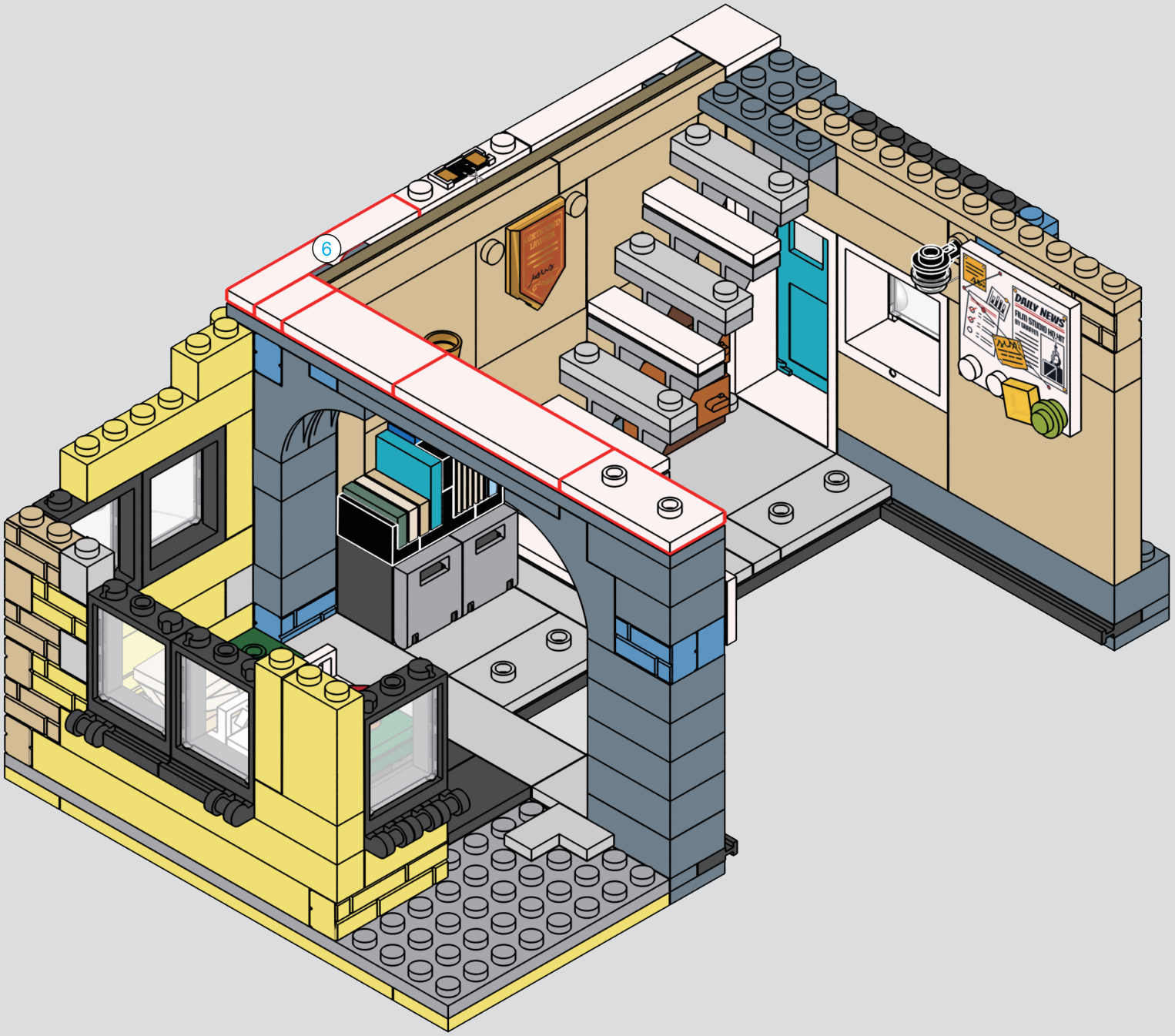



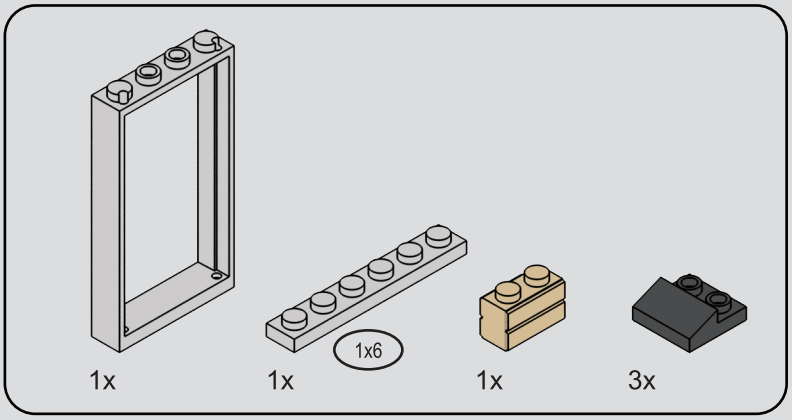

92

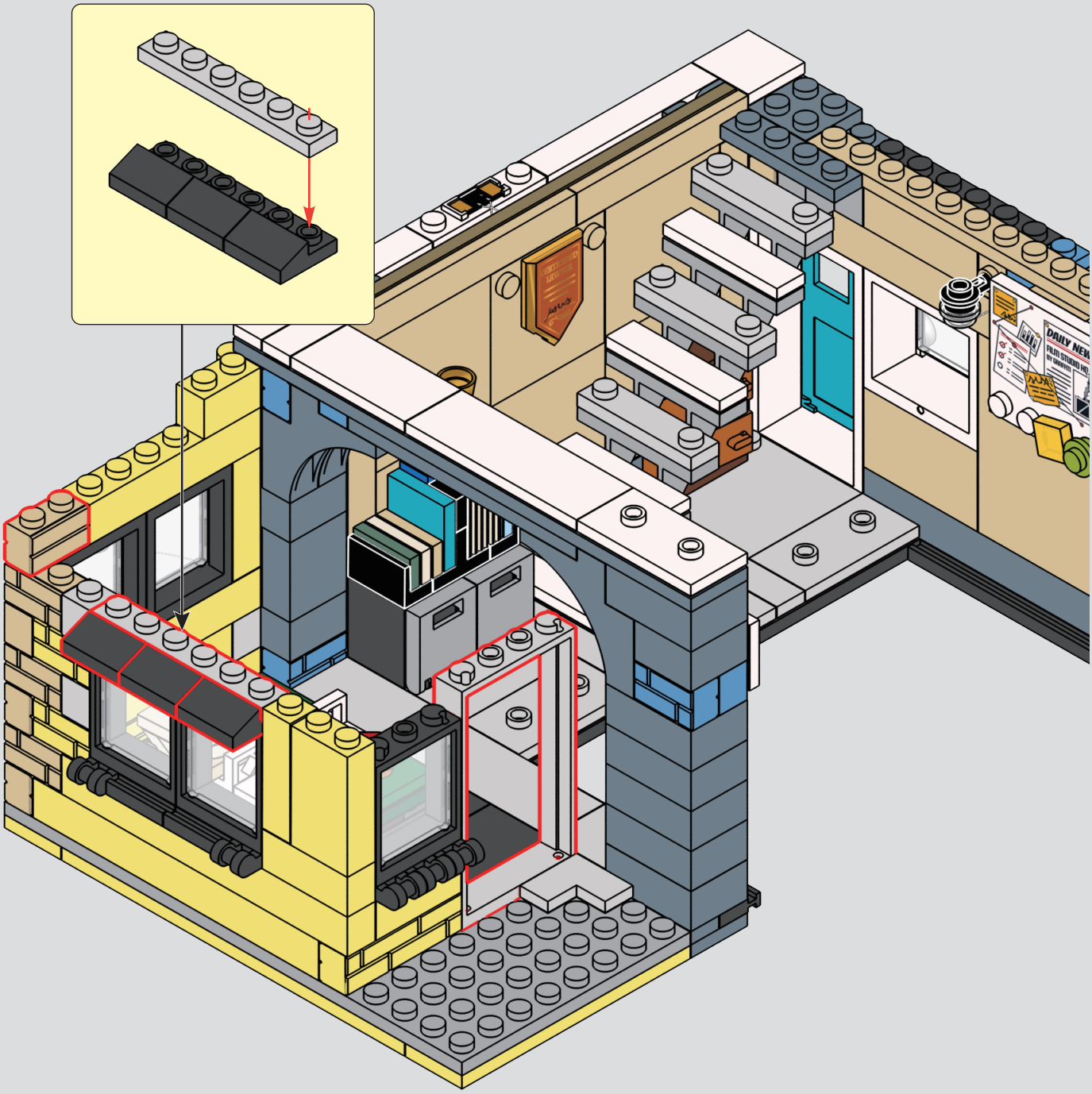

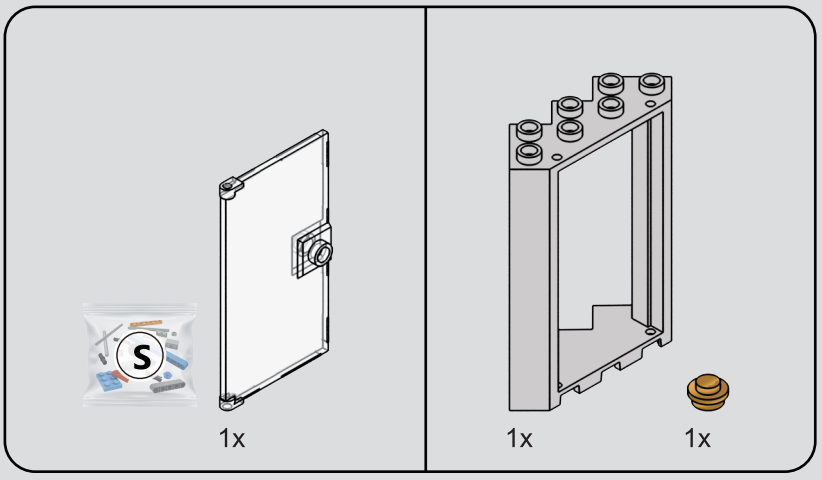

93

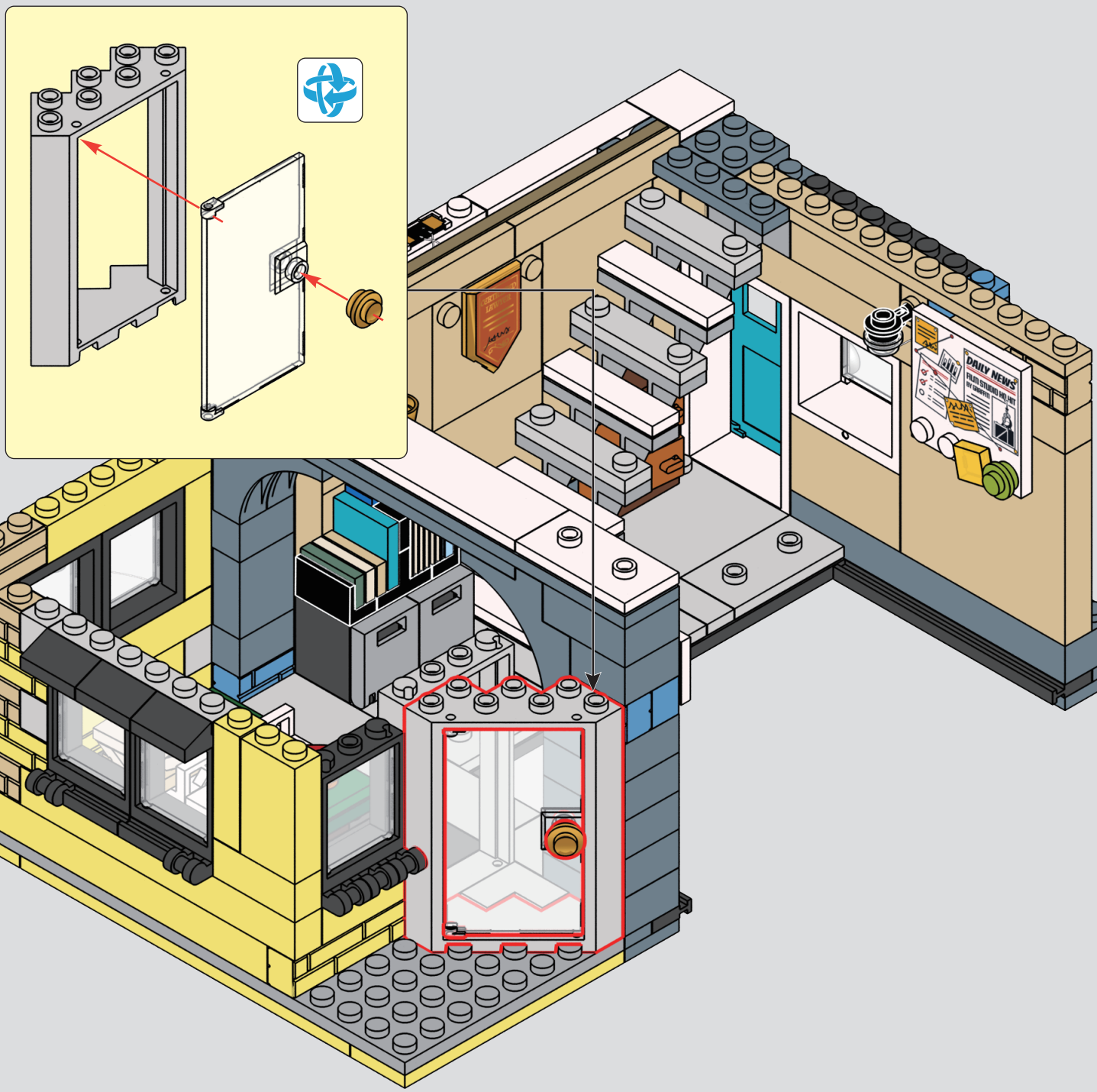

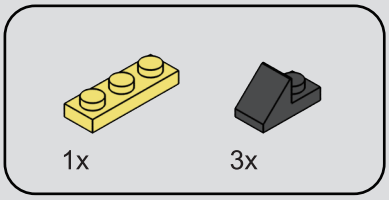

94

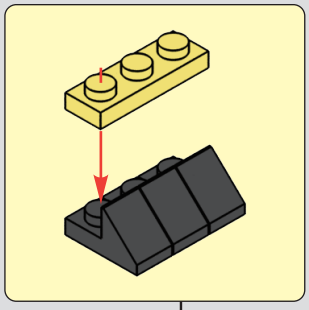

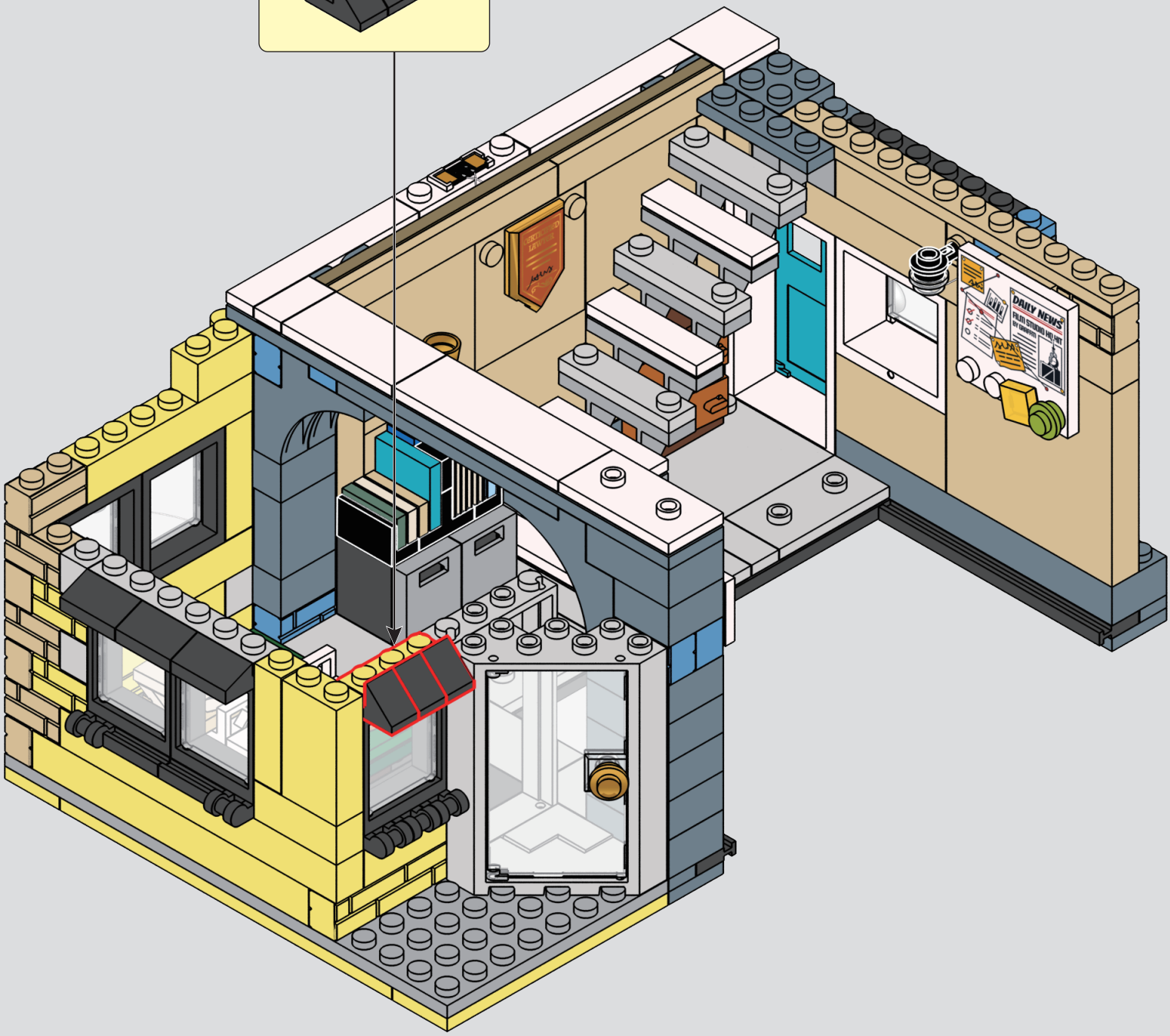

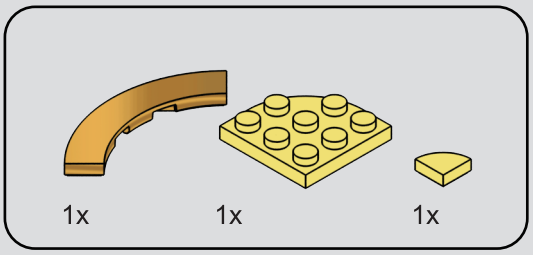

95

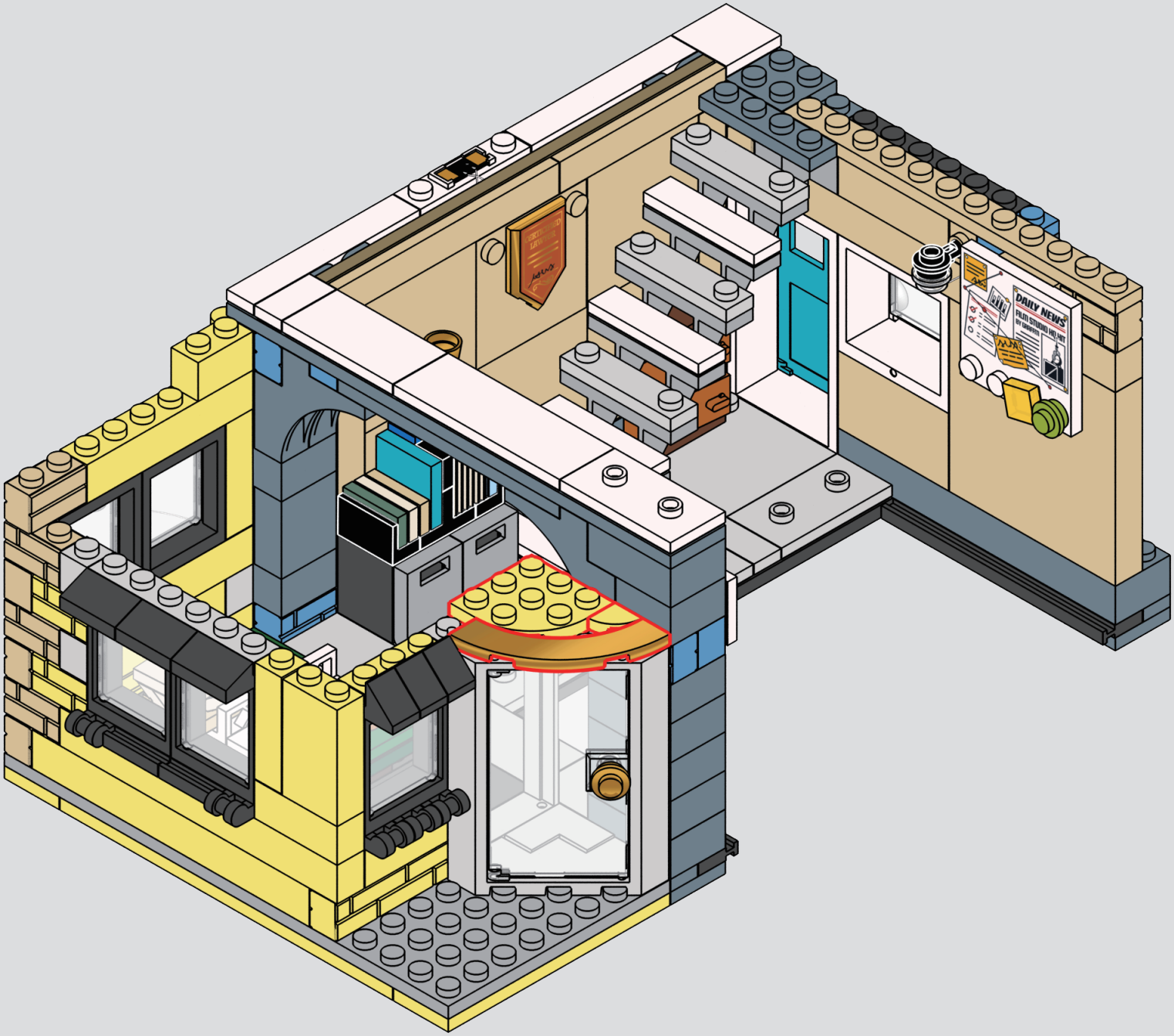

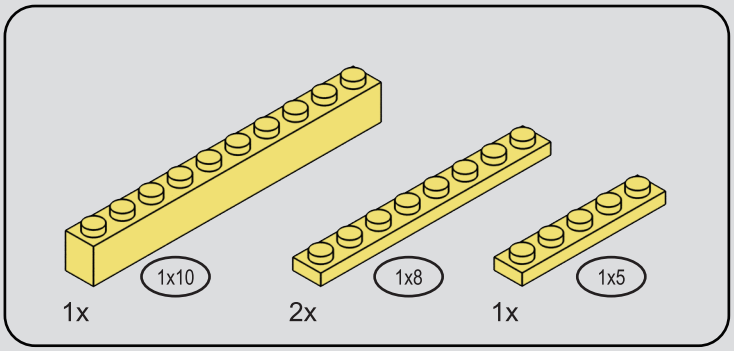

96

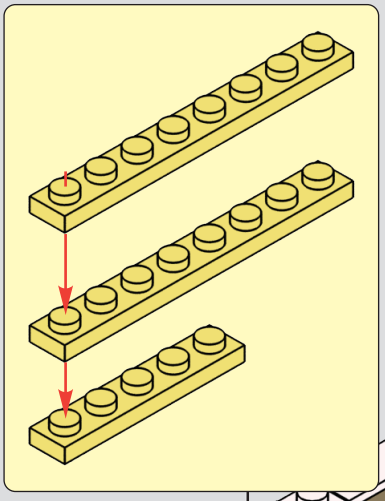

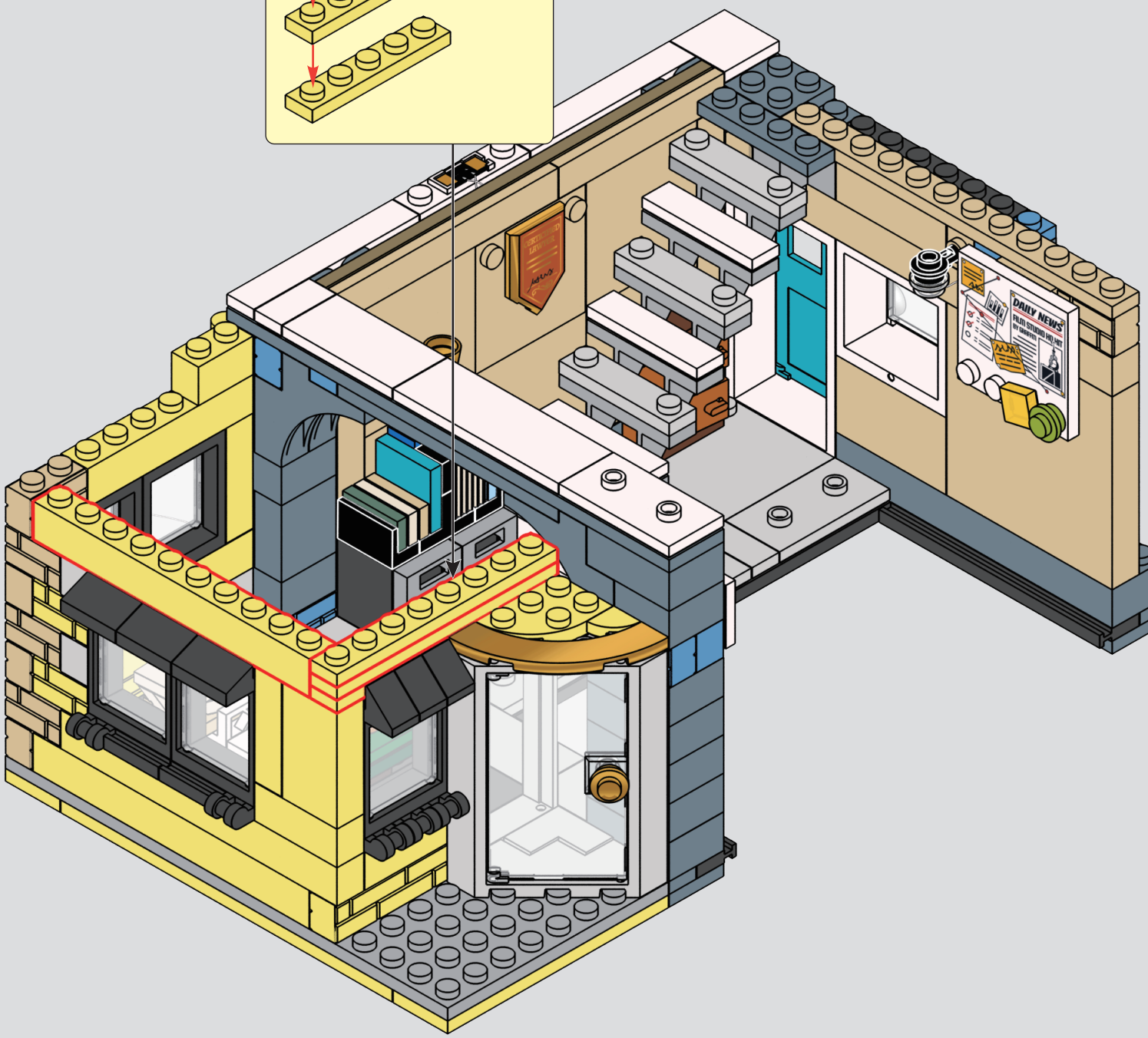

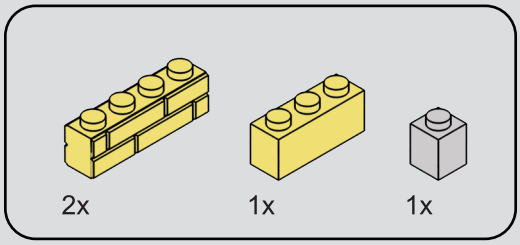

97

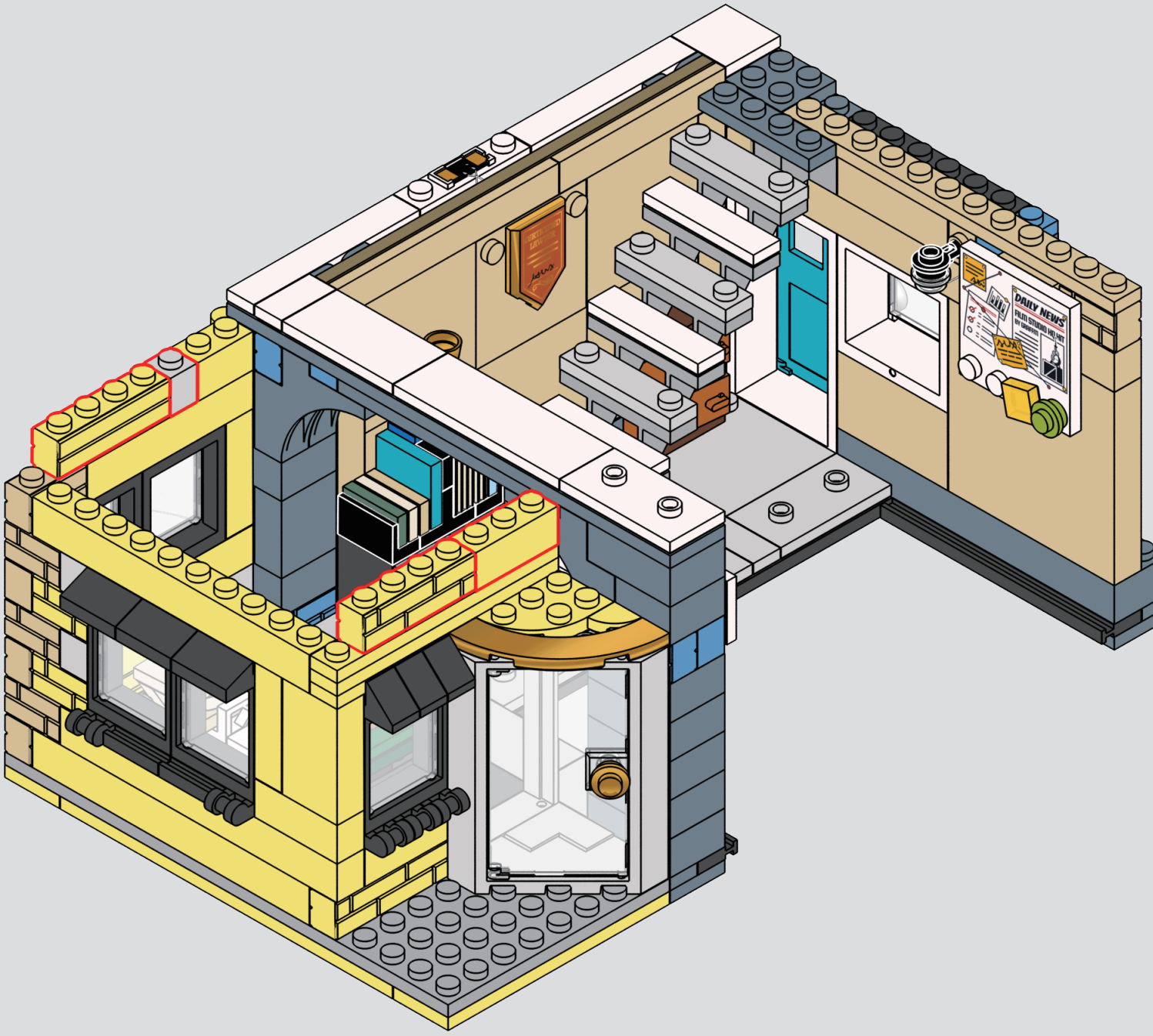

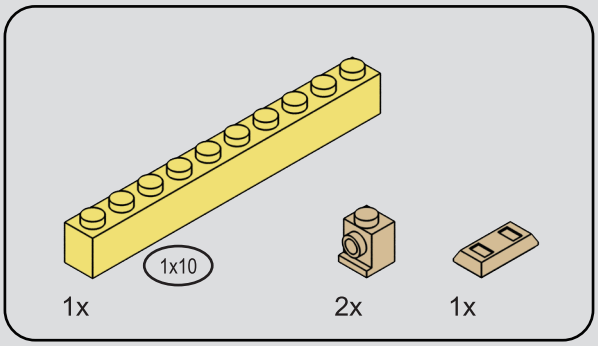

98

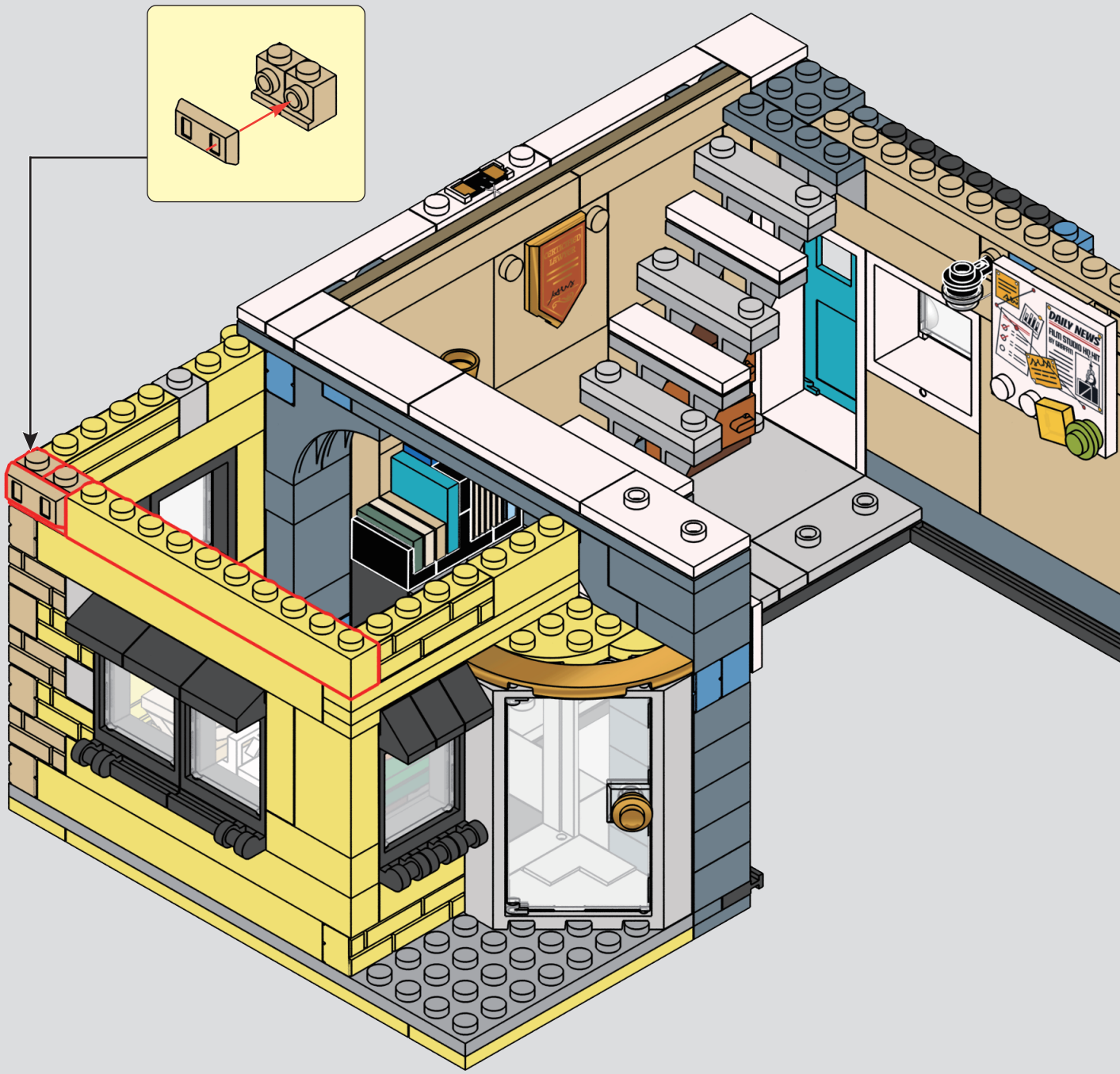

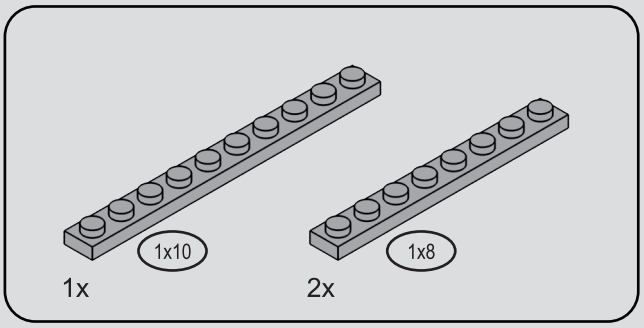

99

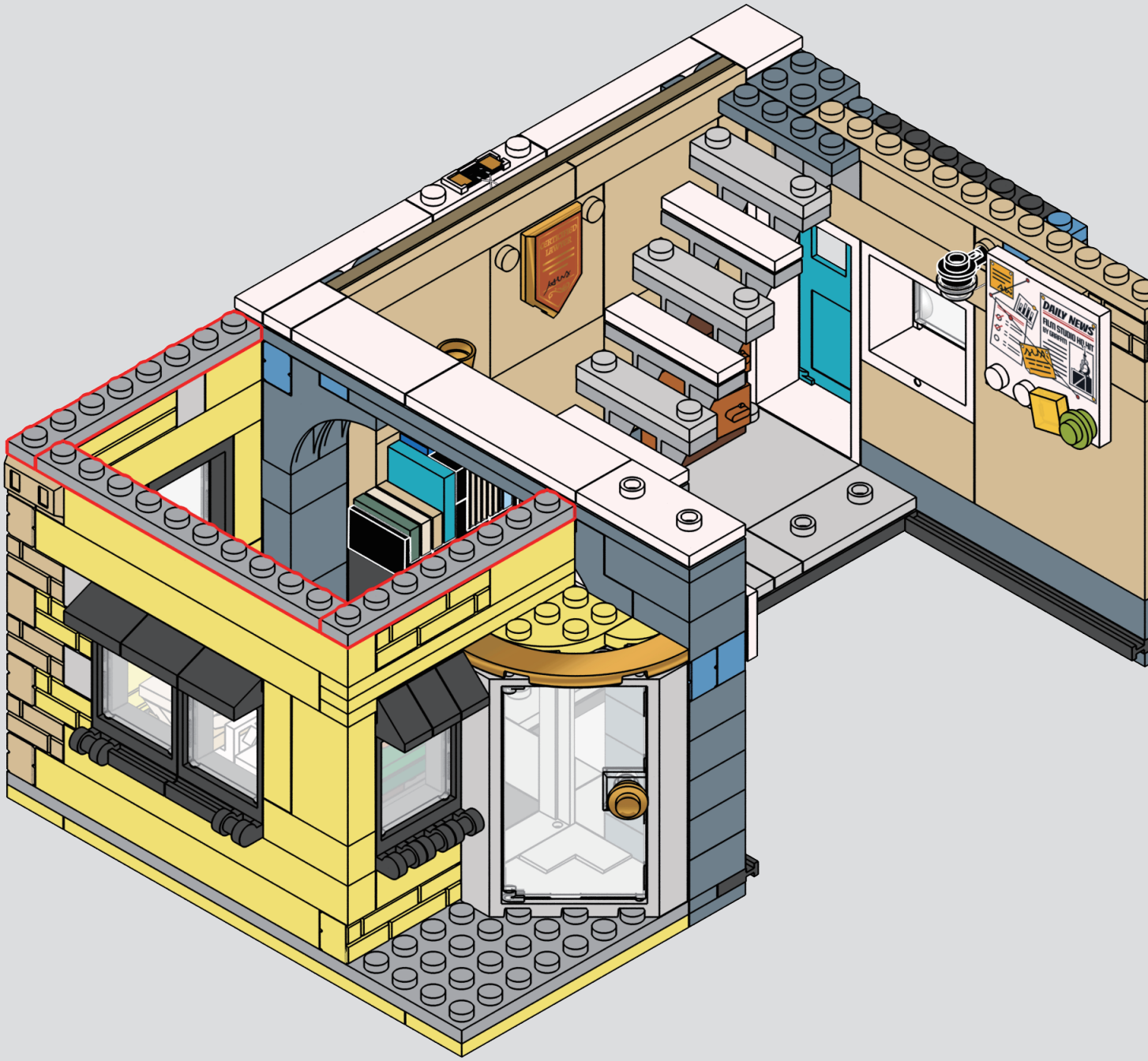

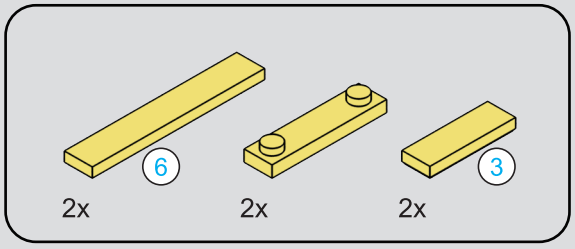



100

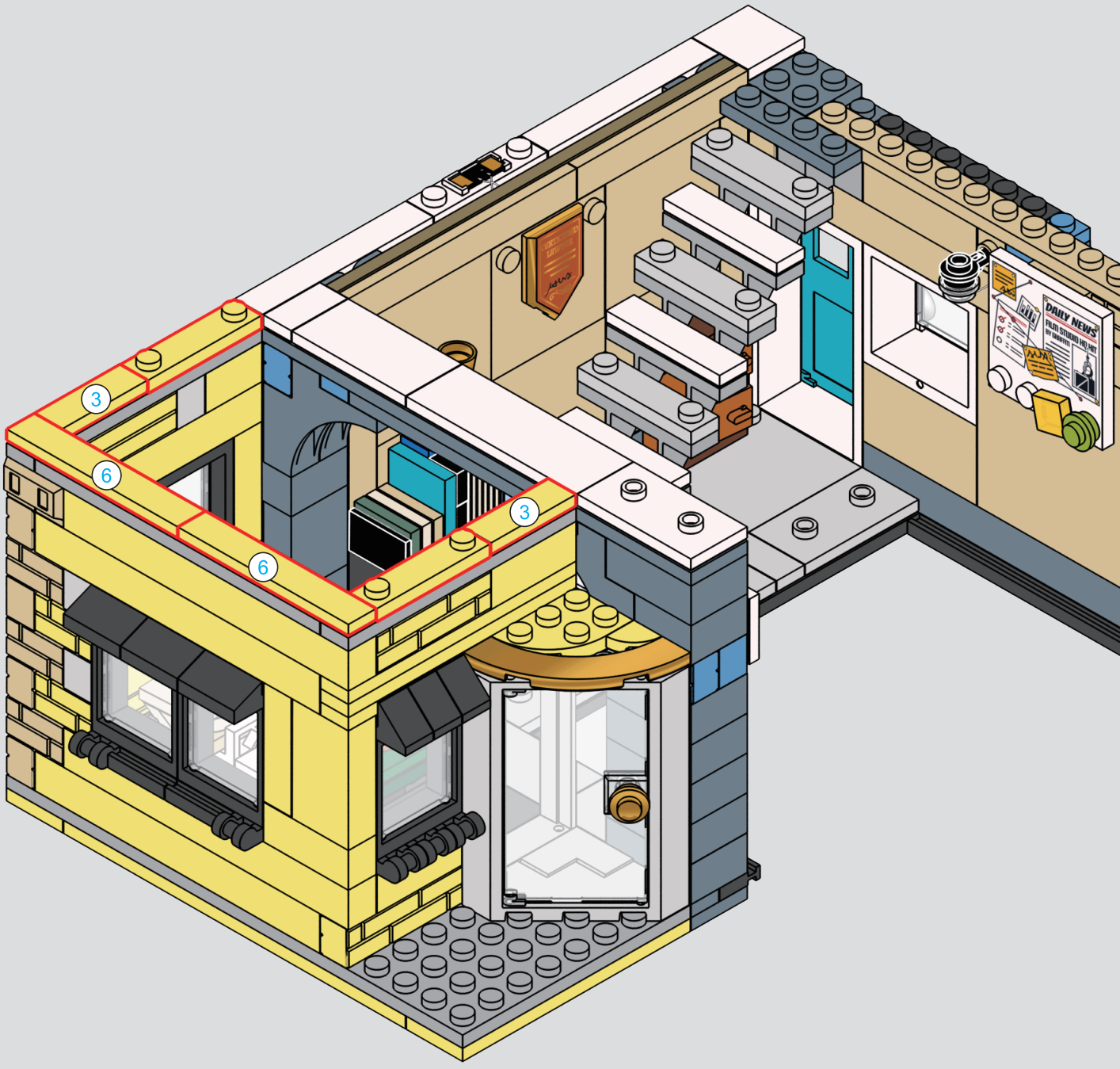

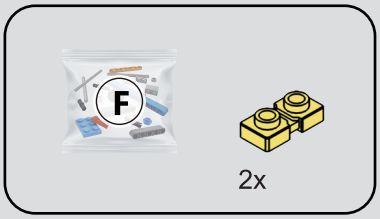

101

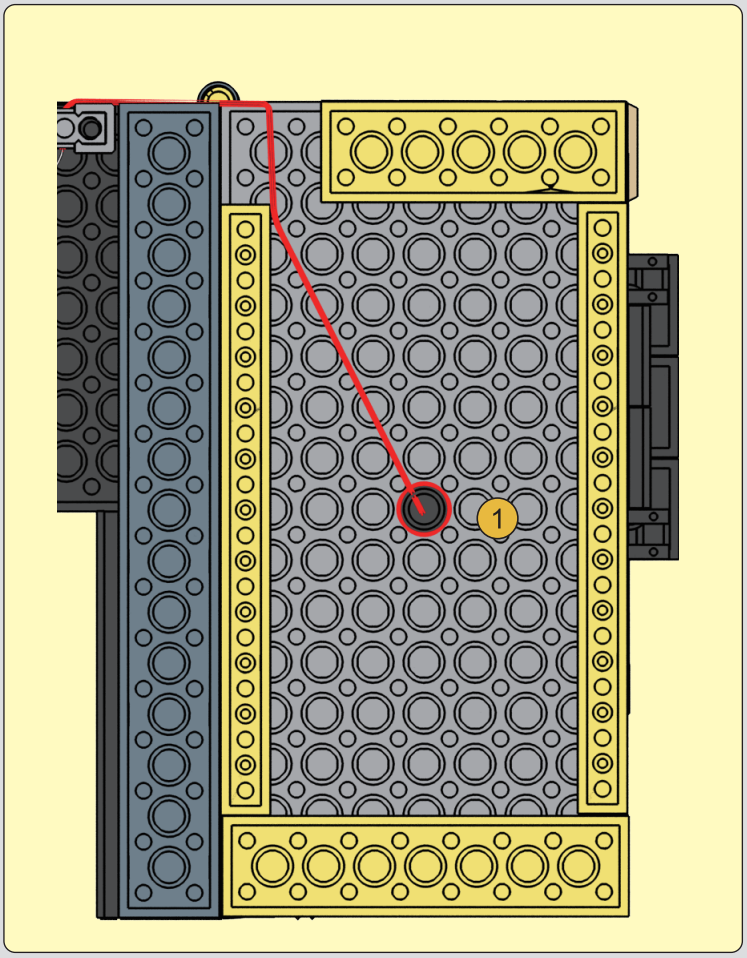

1

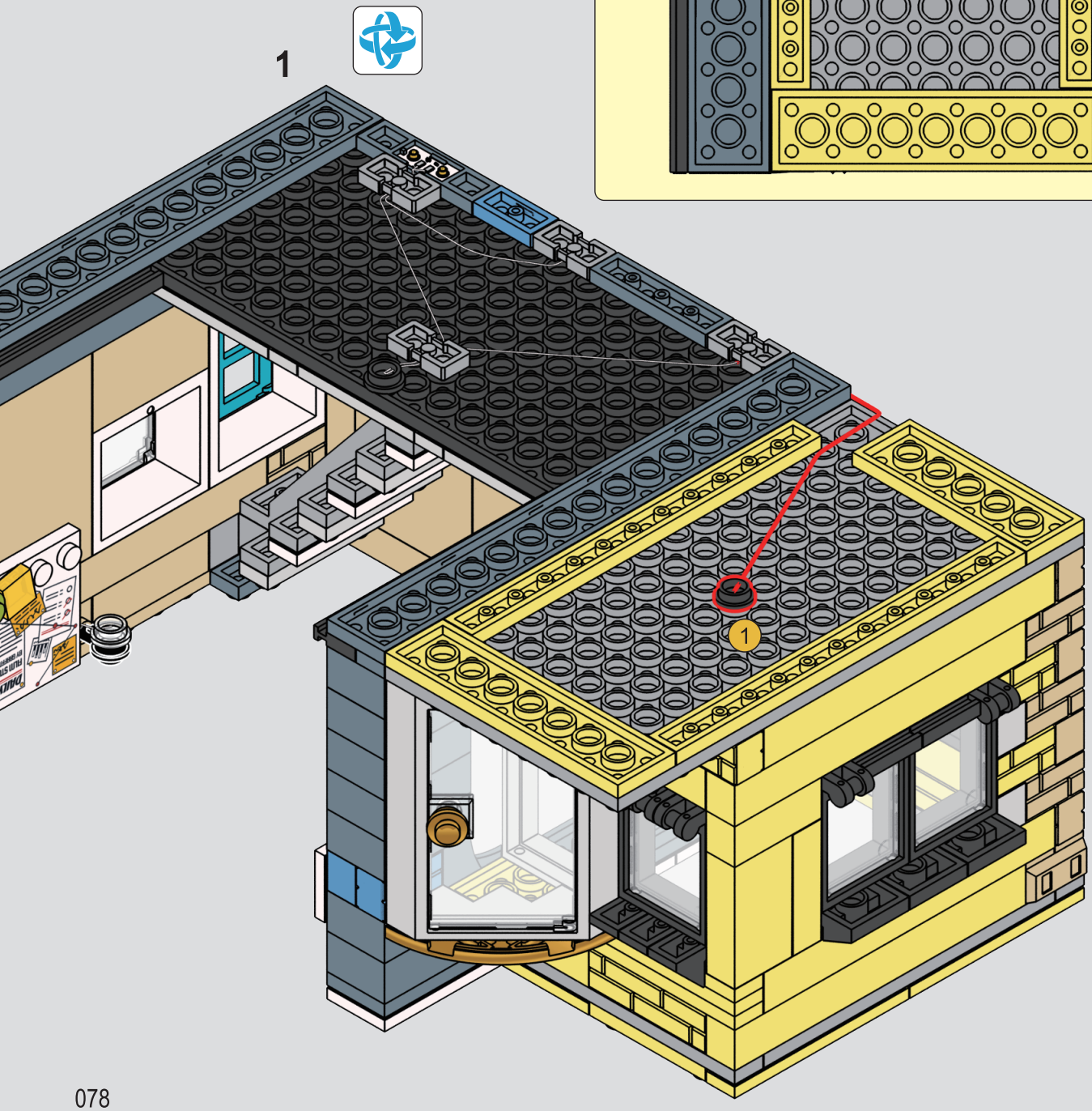

2

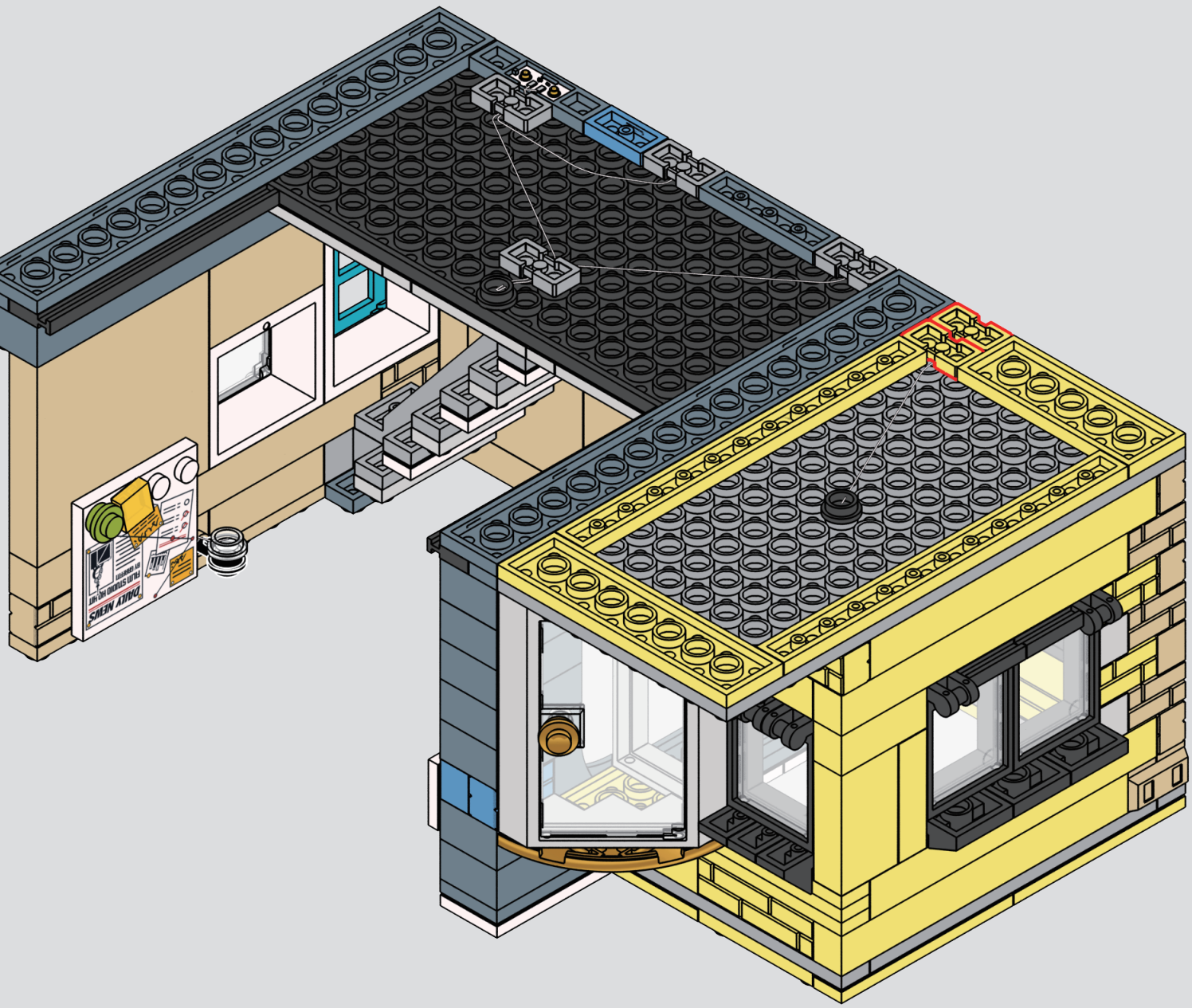

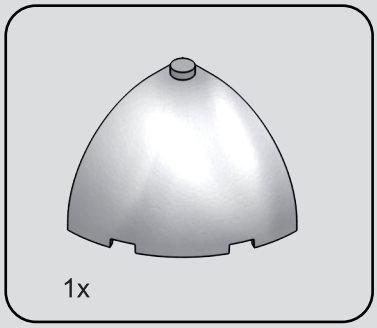

102

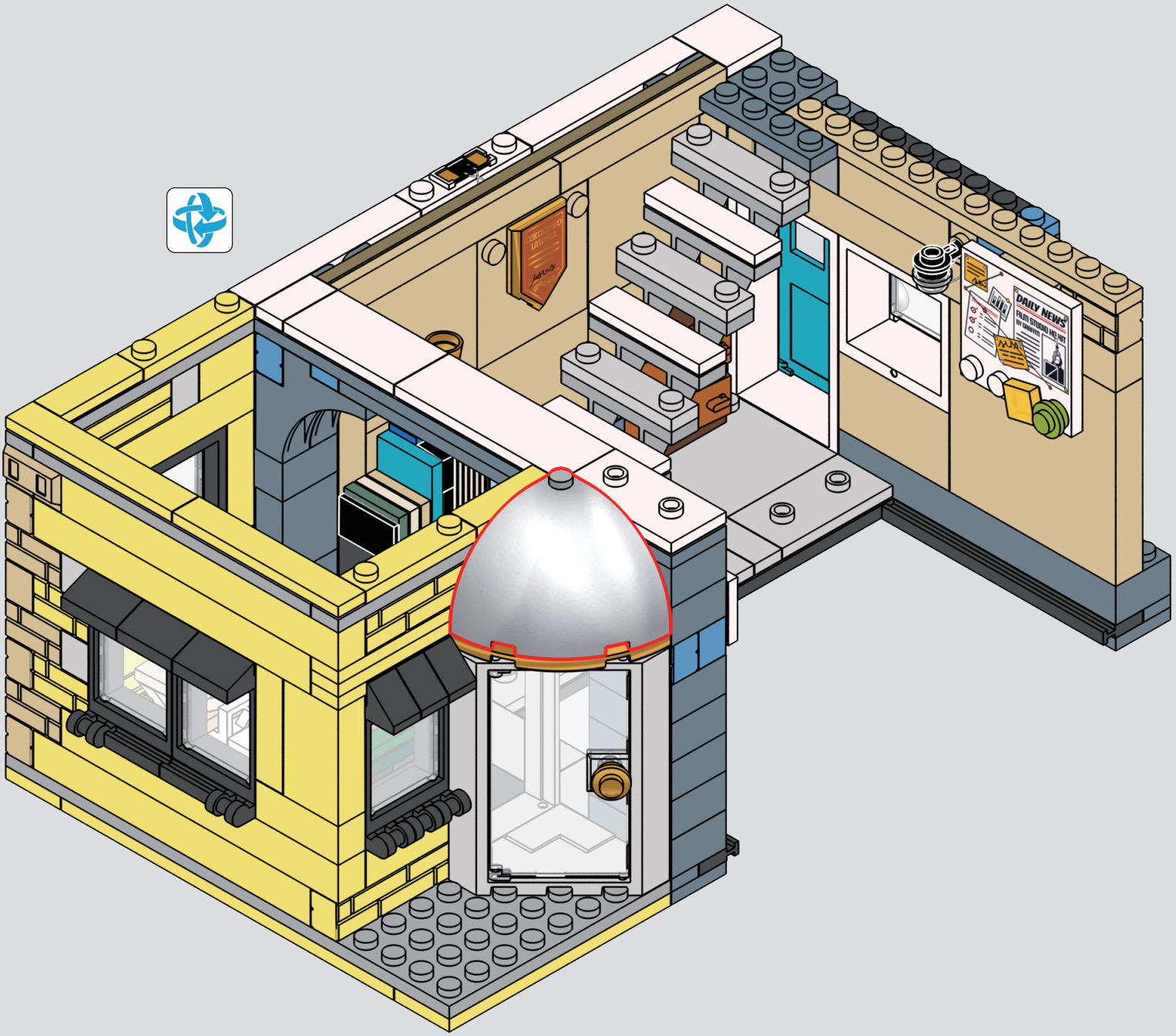


9


DAILY NEWS

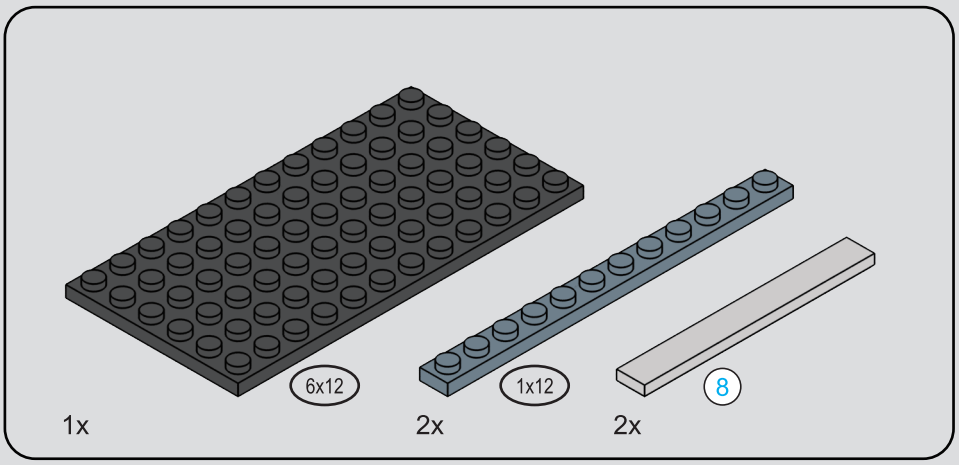

103

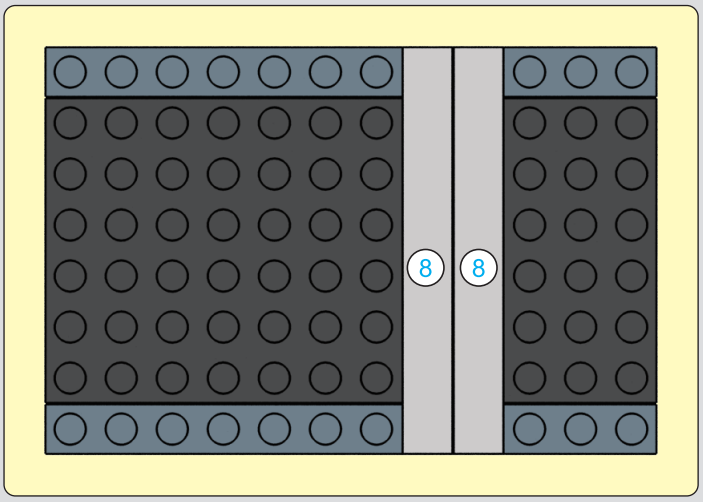

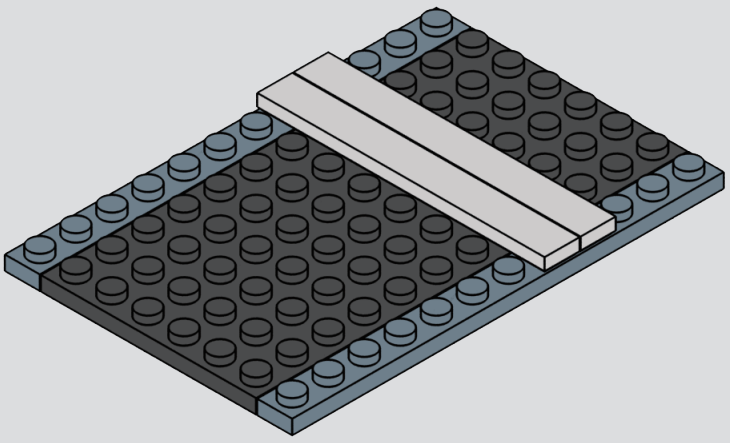

8 1:1

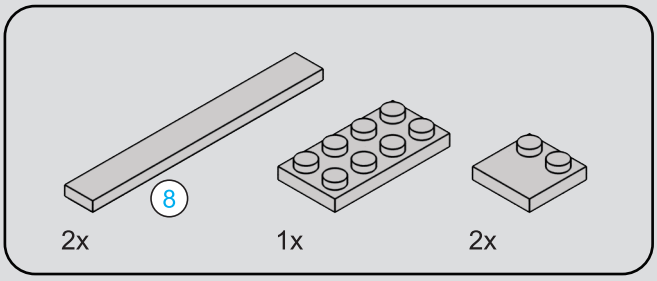

8 1:1

104

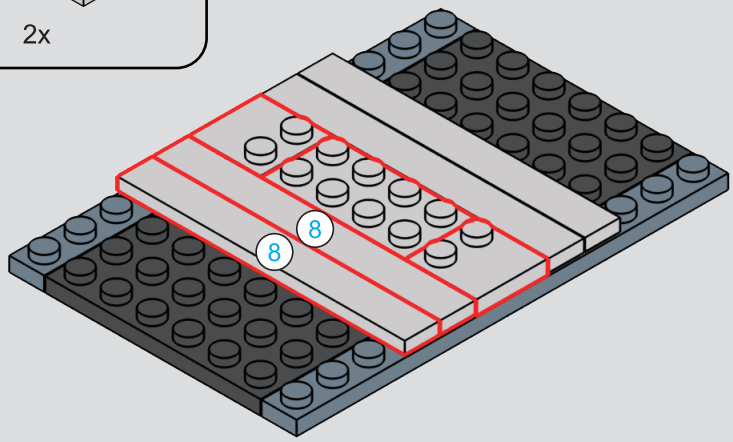

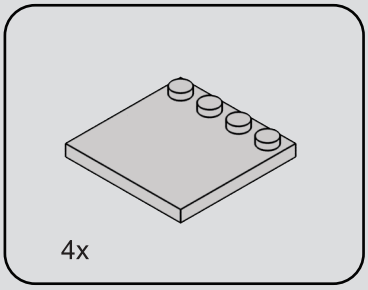

105

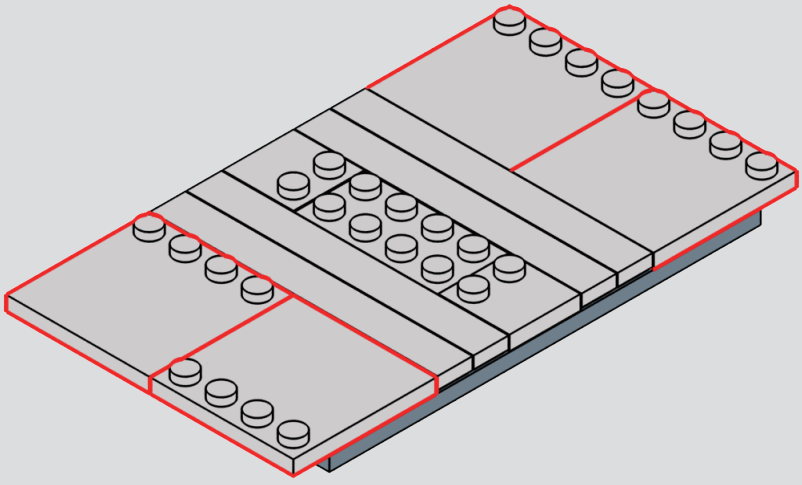

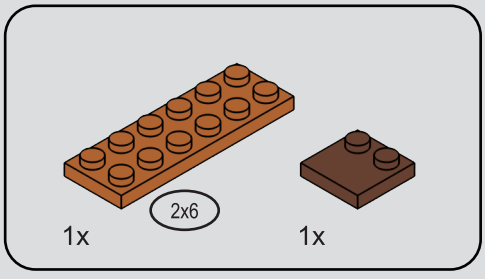

106

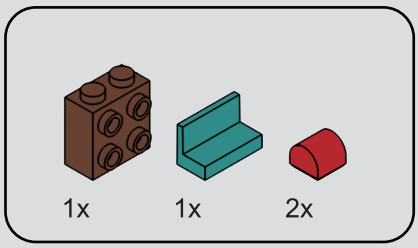

107

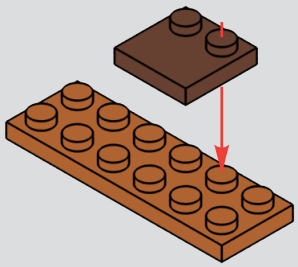

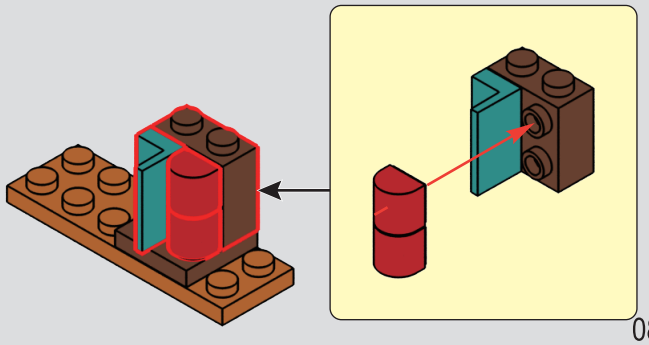

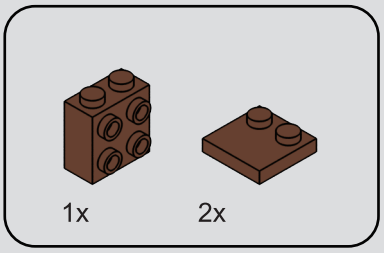

108

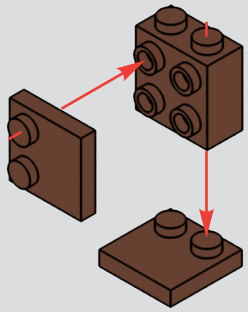

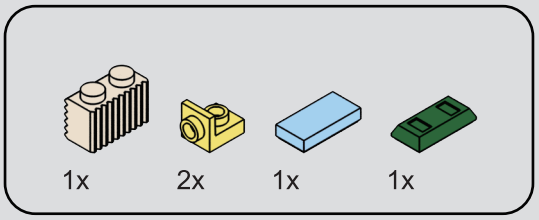

109

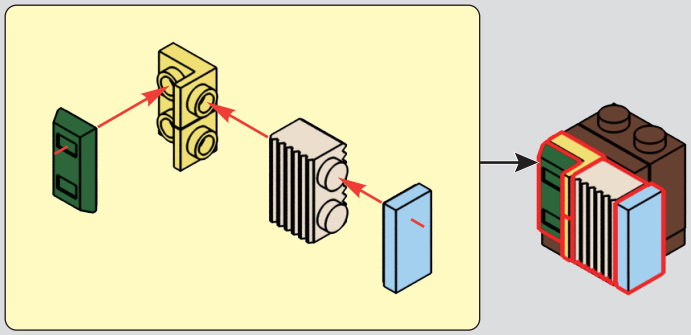

110

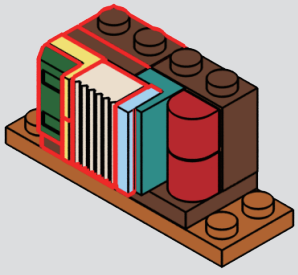

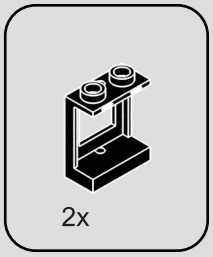

111

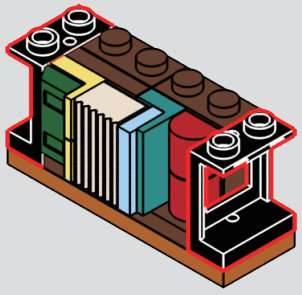

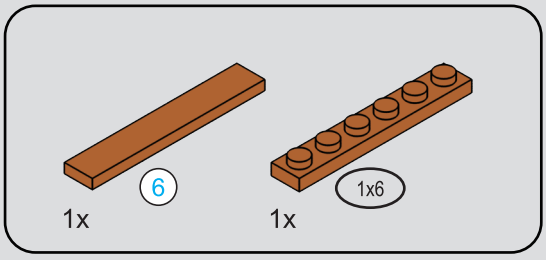

112

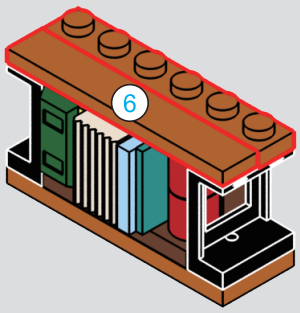



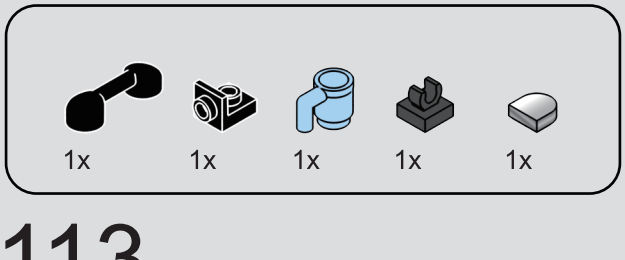

113

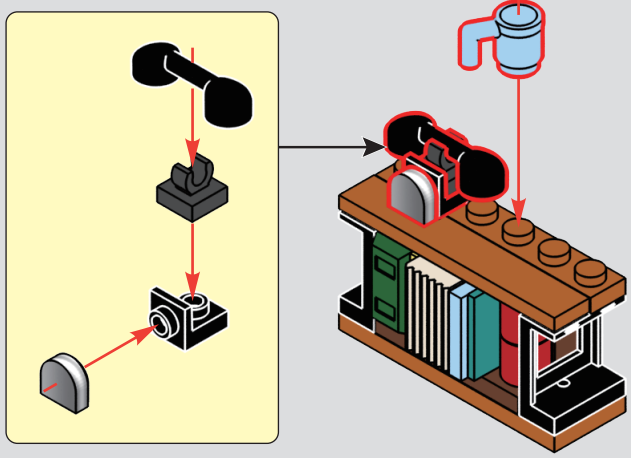

114

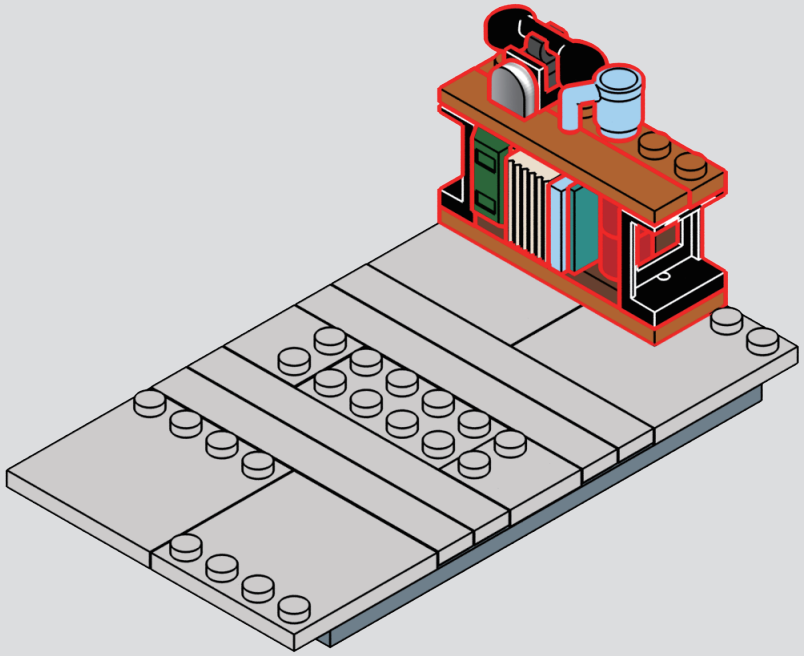

115

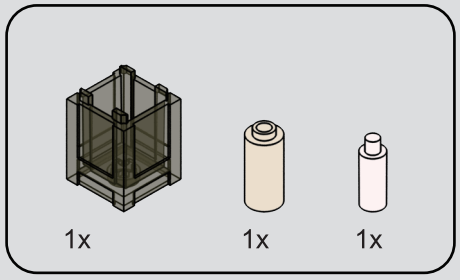

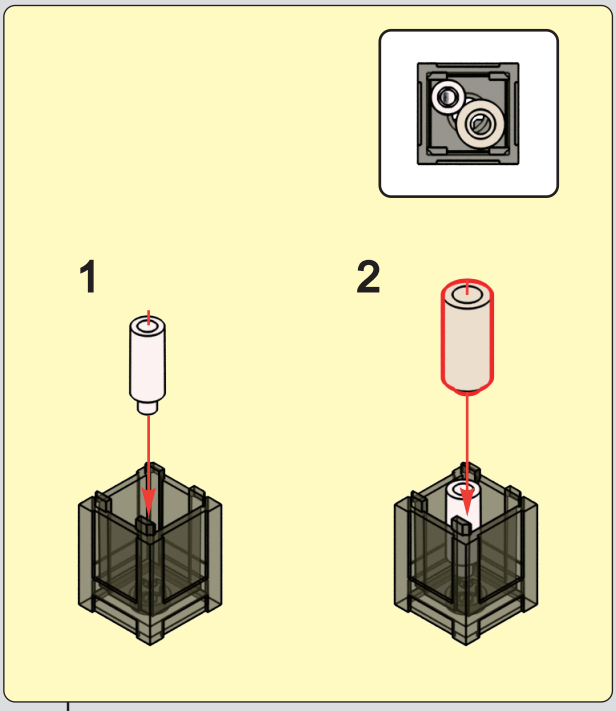

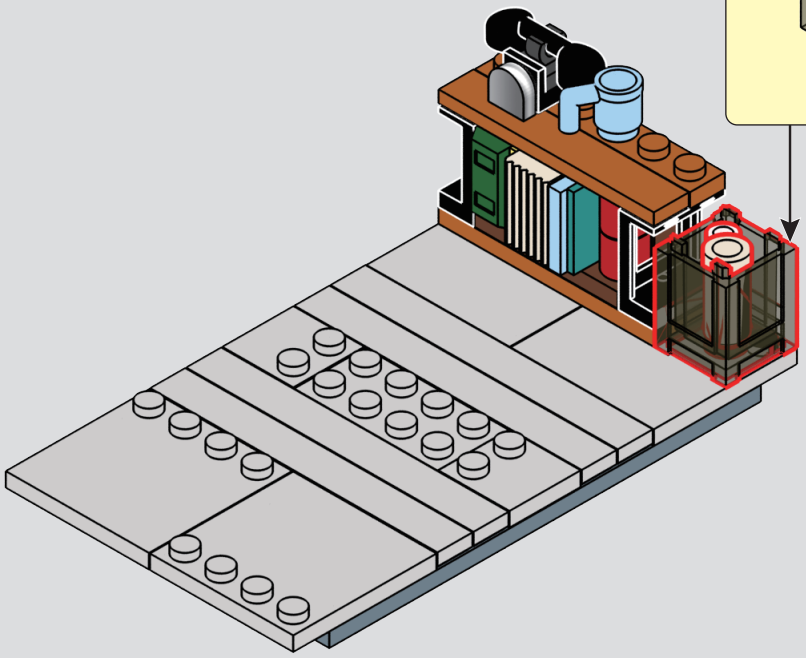

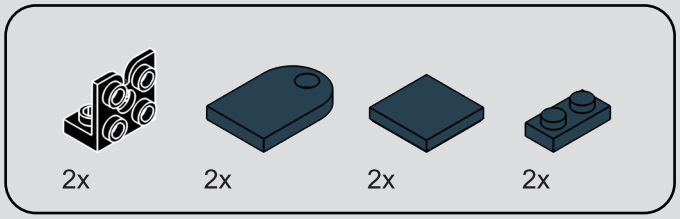

116

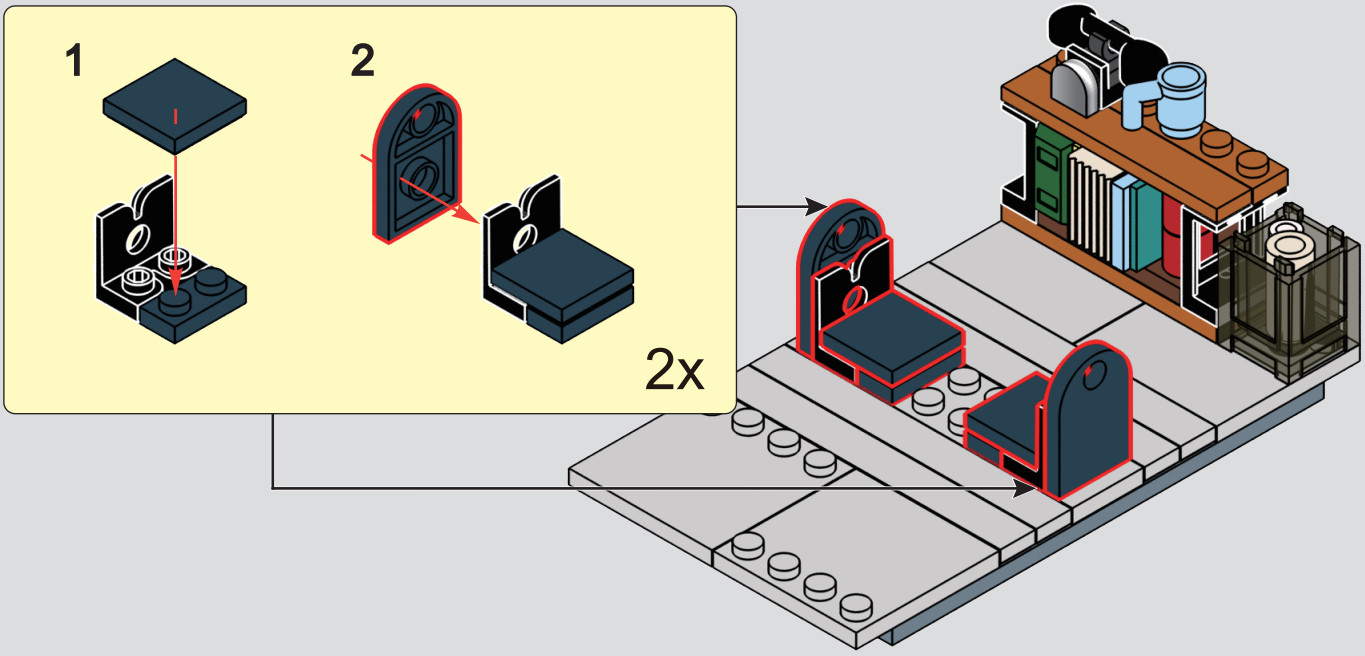

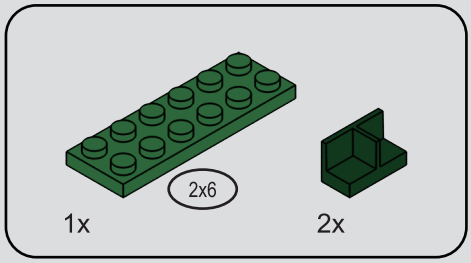

117

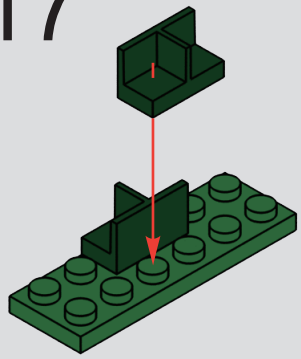

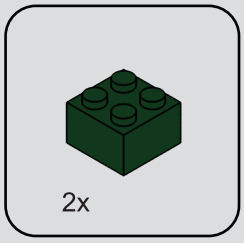

118

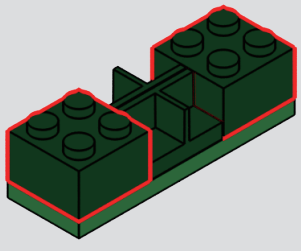

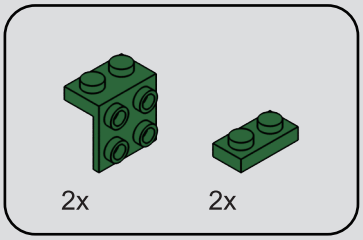

119

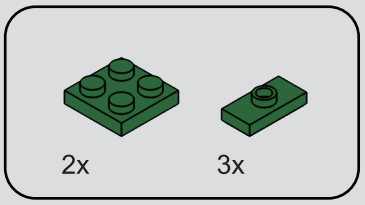

120

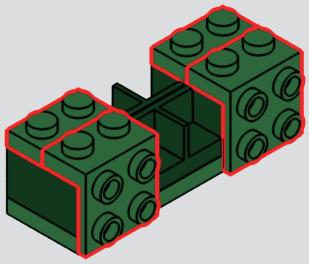

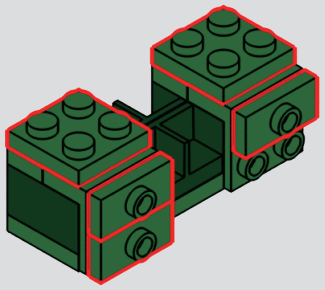

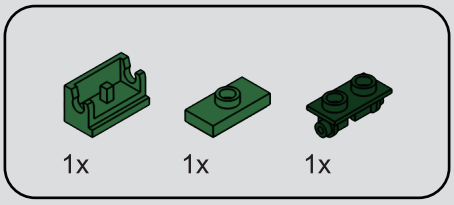

121

122

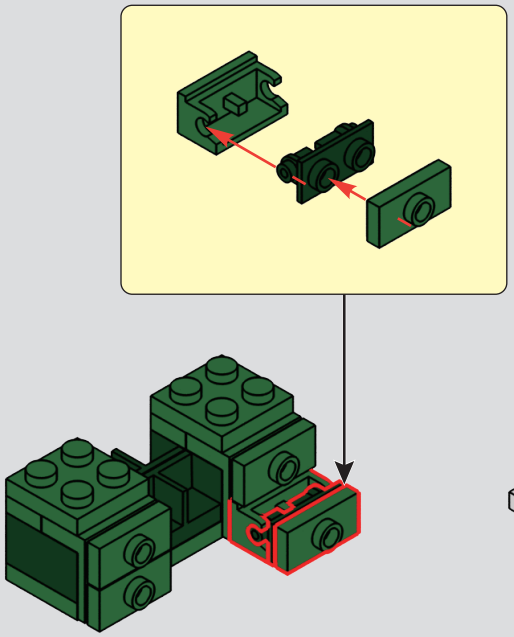

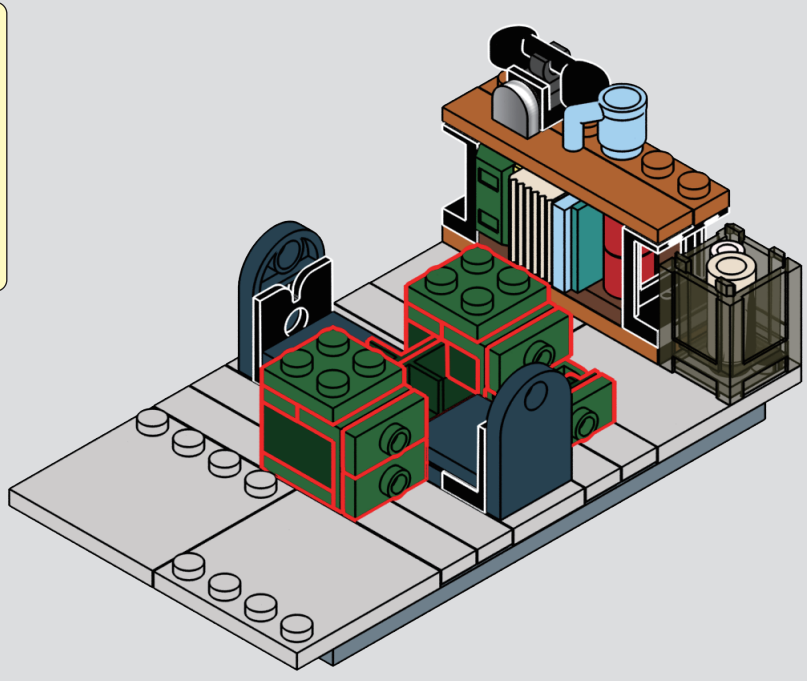

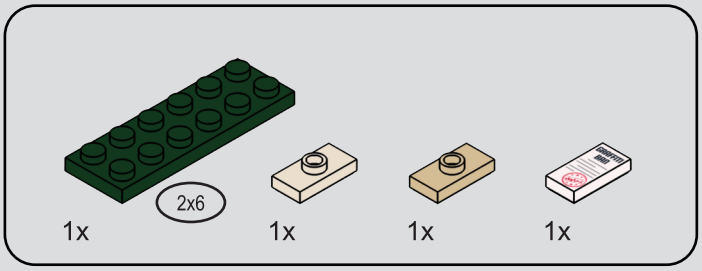

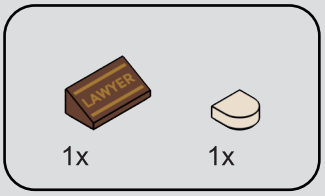

124

123

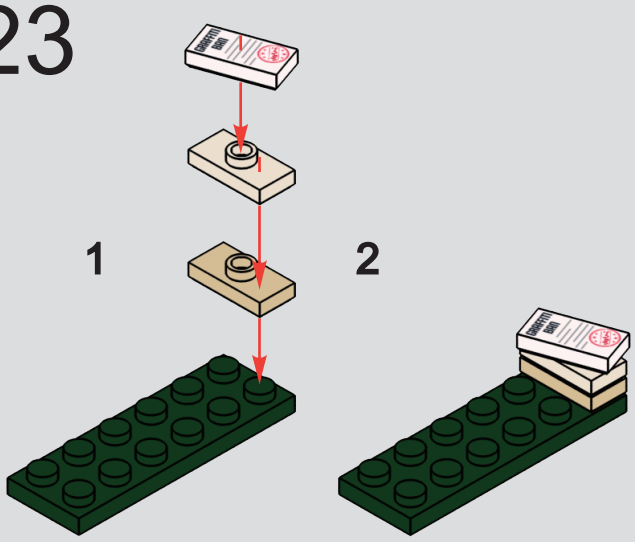

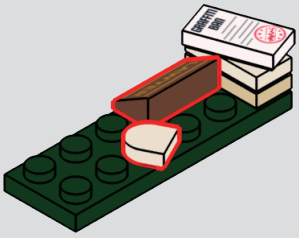

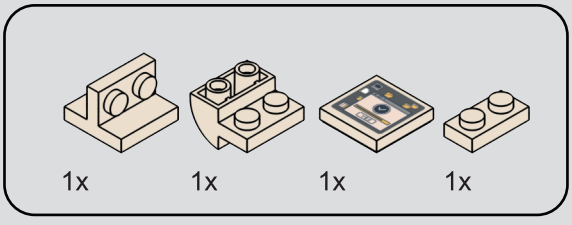

126

125

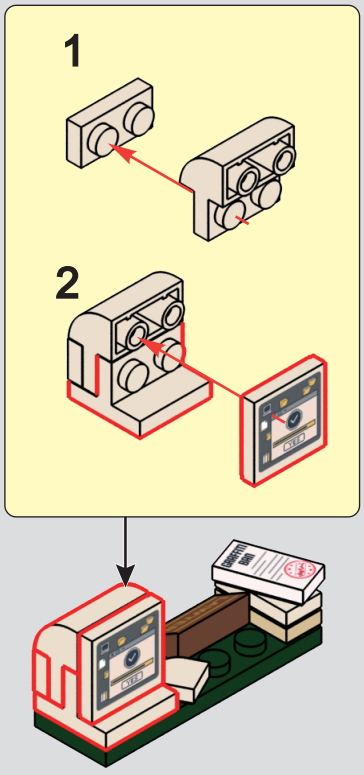

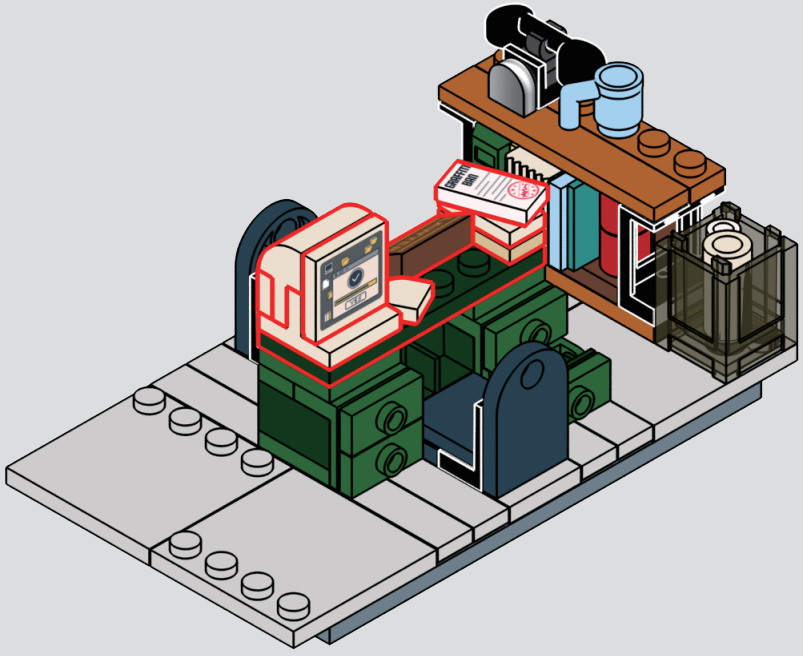

1x 1x

127

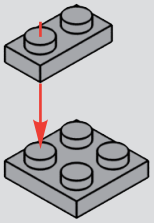

1x 1x 1x

128

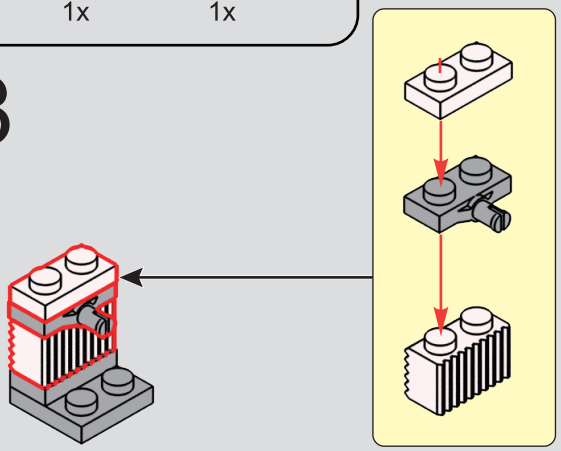

1x

129

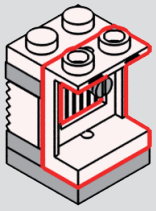

1x 1x 1x

130

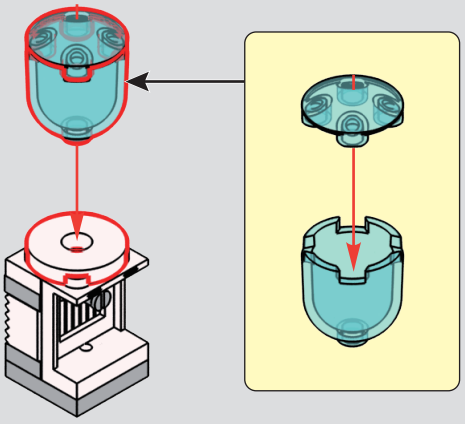

131

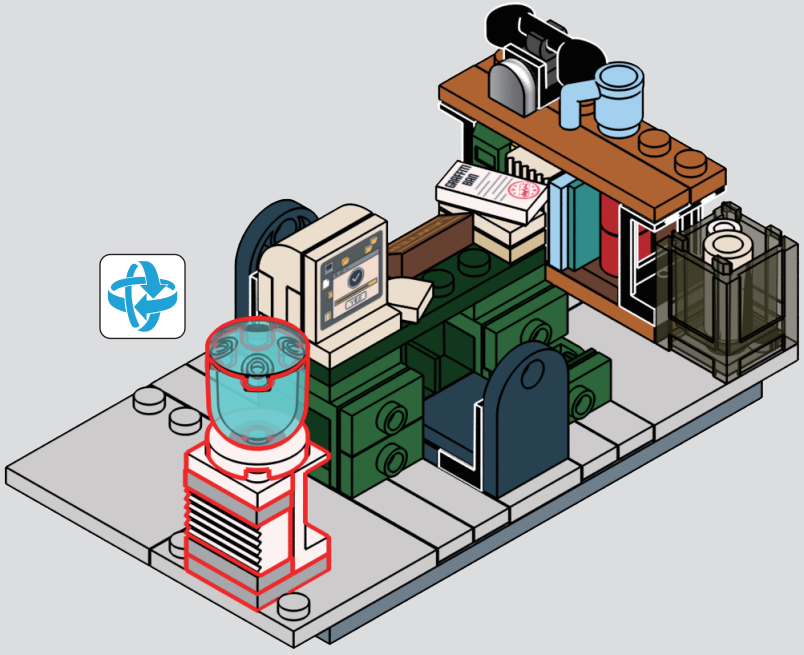

132

1

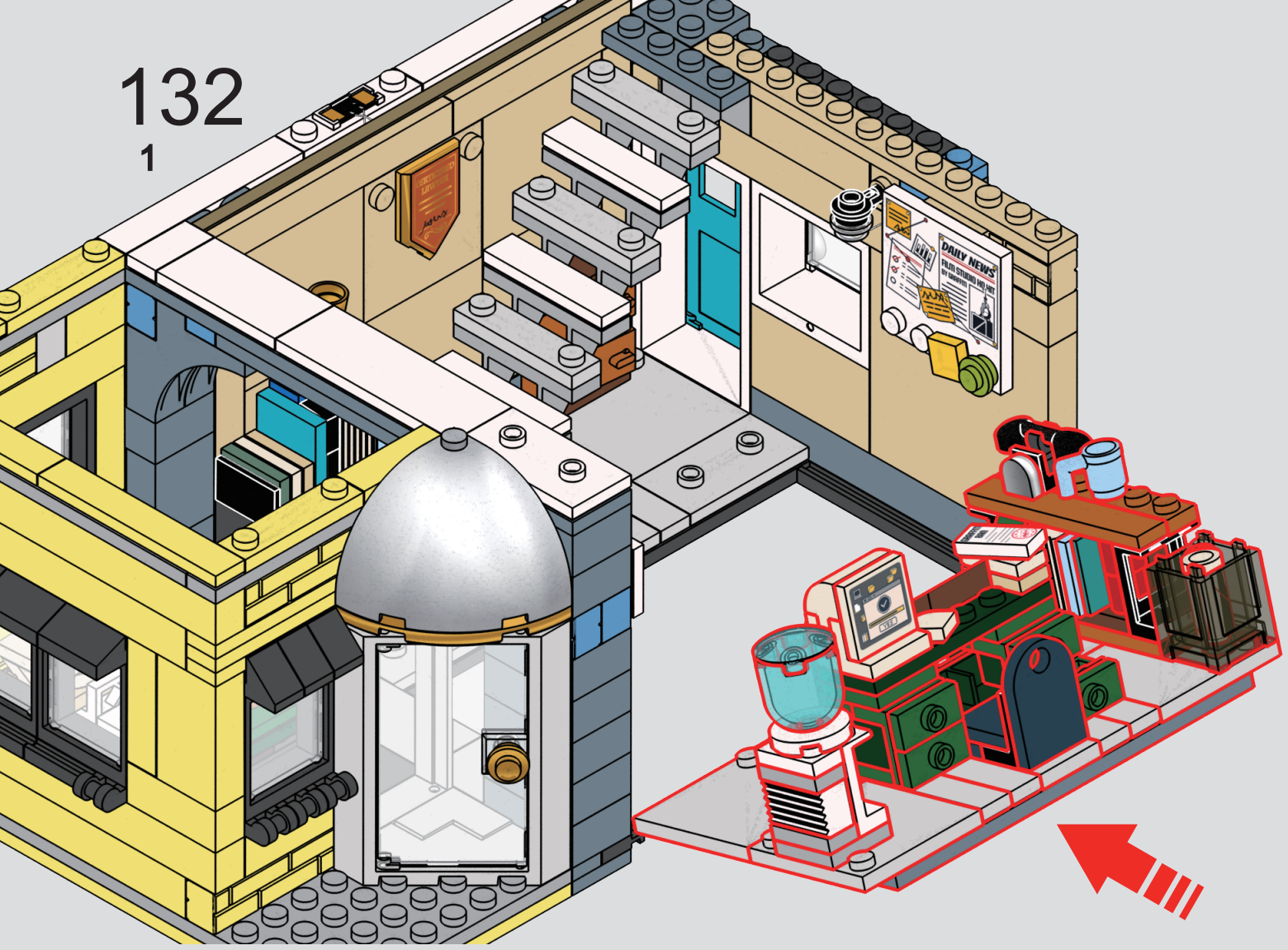

2

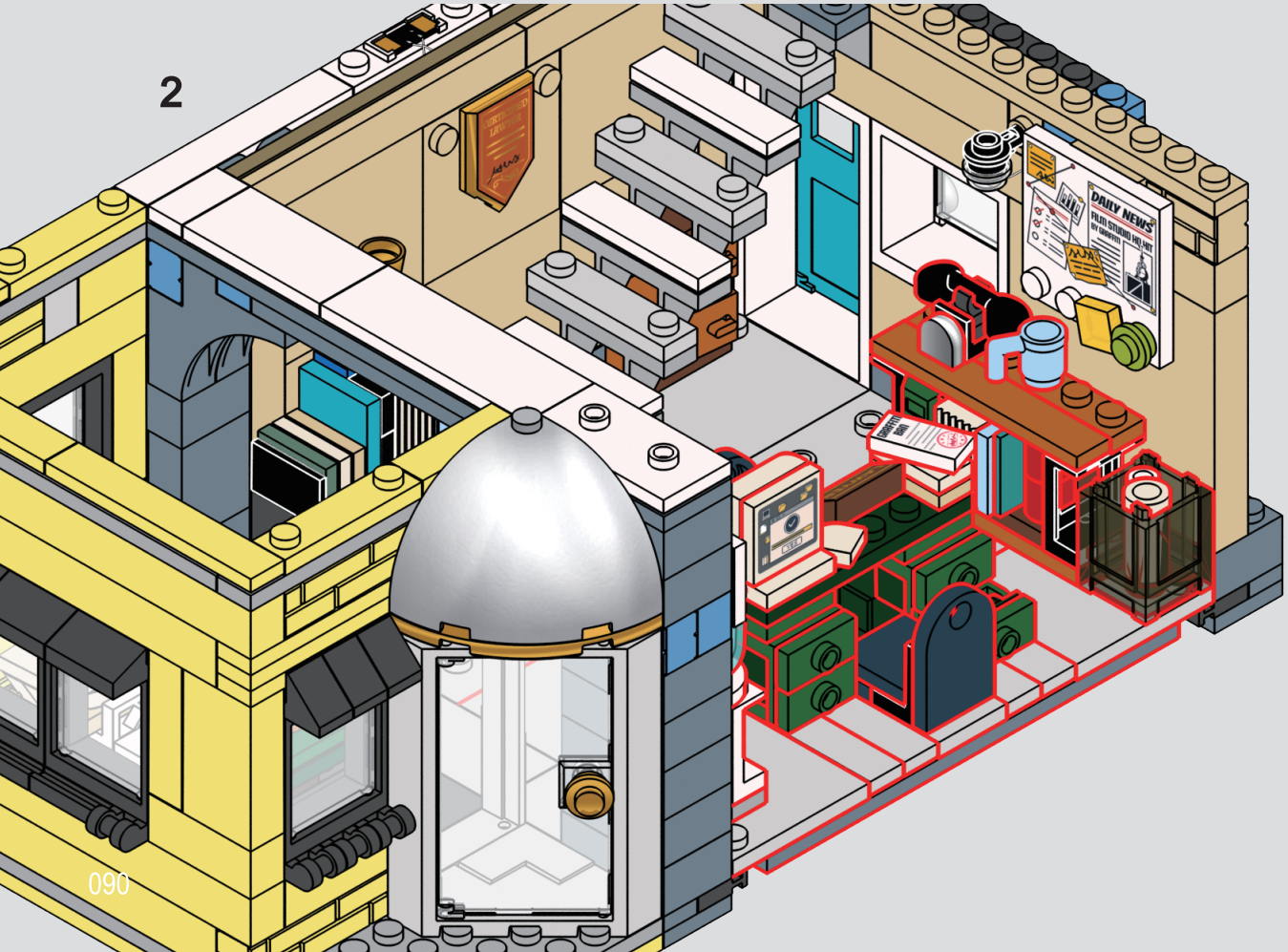


10


BARBER
212
555
XXX
BEARD BOB'S BARBER
718-555-XXX
FADE | LINE-UP | BRAIDS | LOCS
NO.012
SHAVE & GROOMING
HOT SHAVE | BEARD TRIM | RAZOR CUT
BEARD BOB'S BARBER

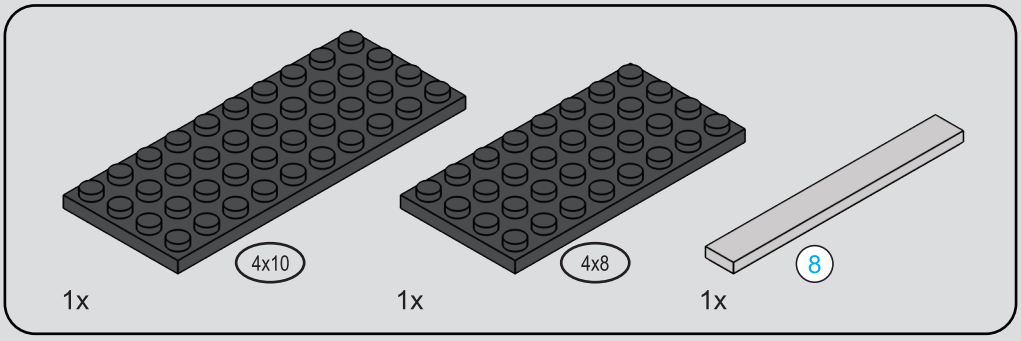

133

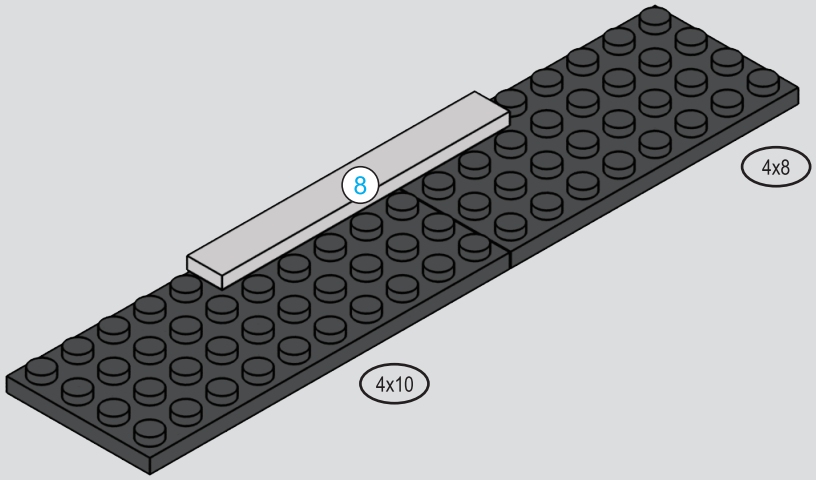



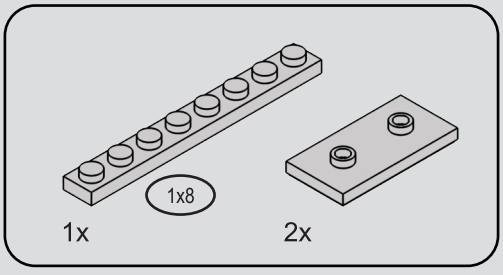

134

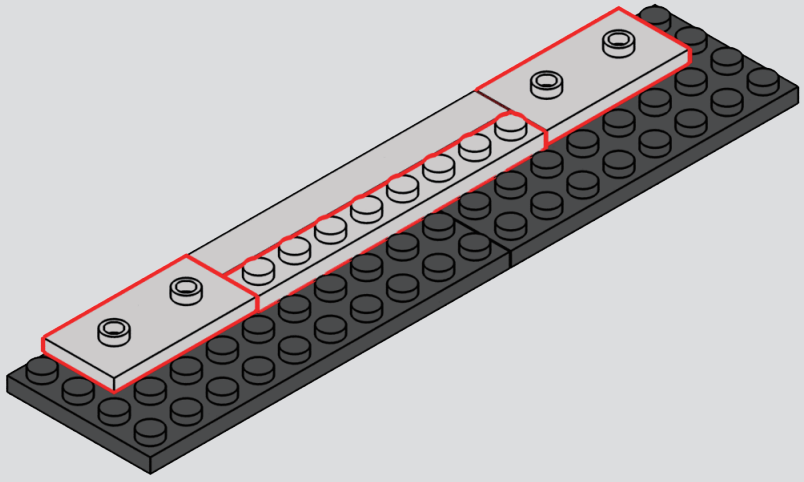

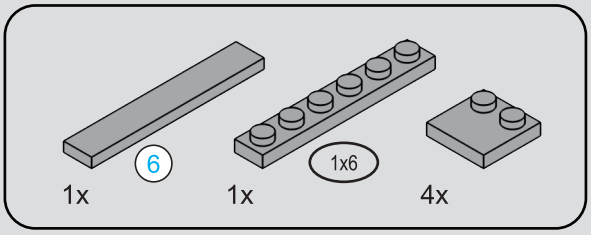



135

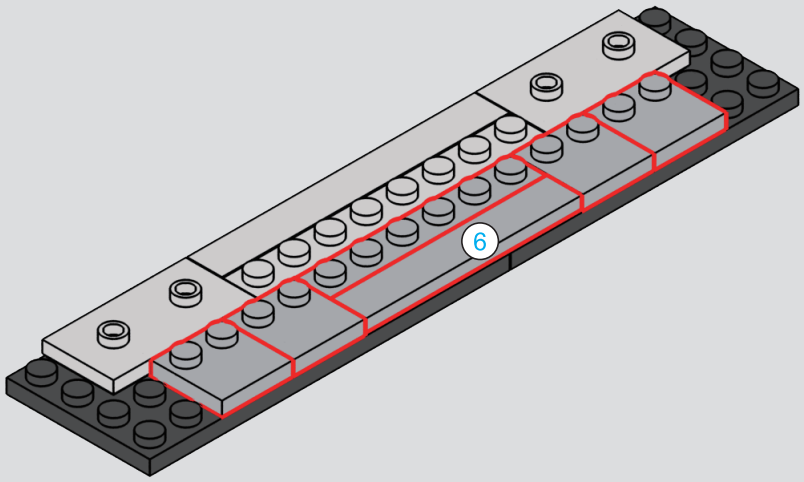

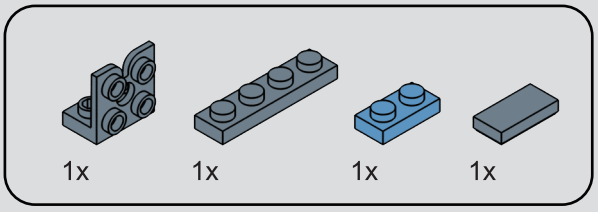

136

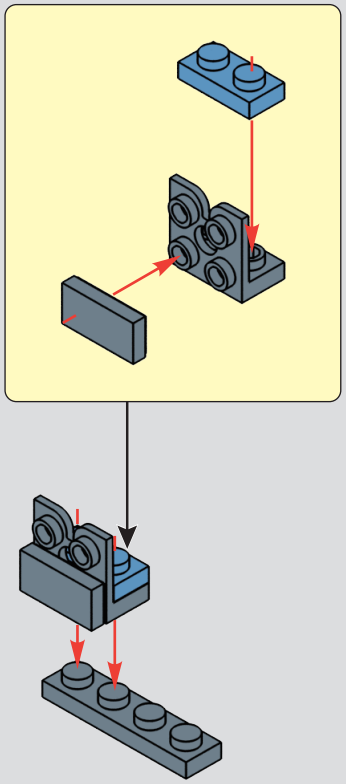

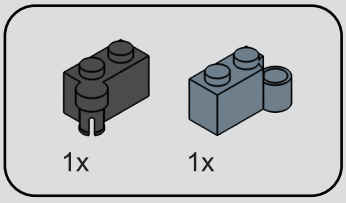

137

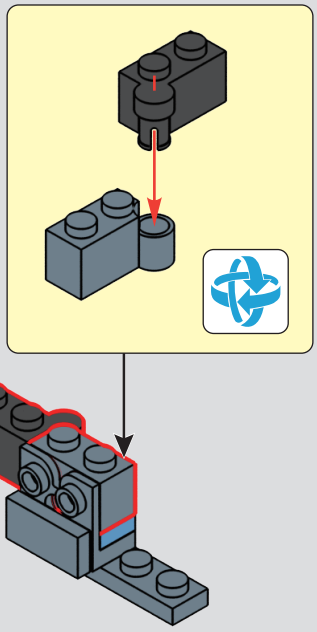

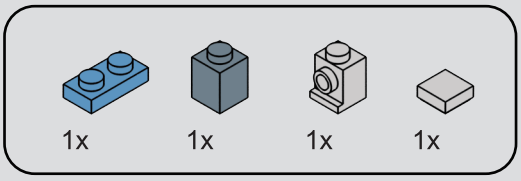

138

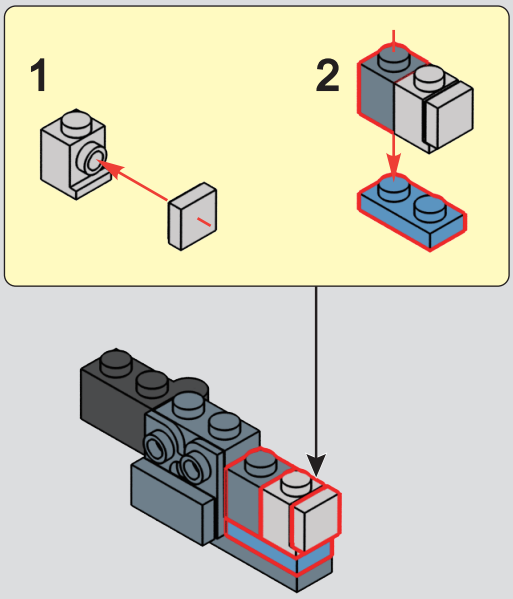

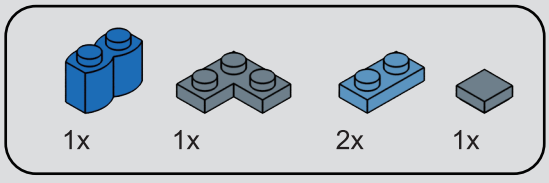

139

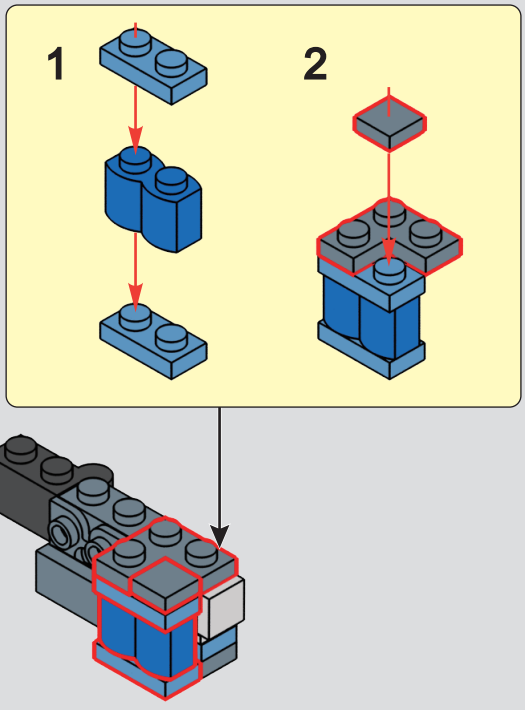

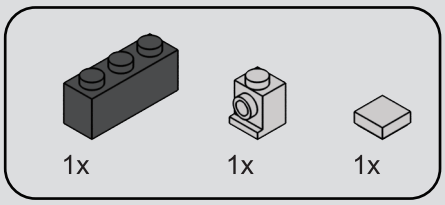

140

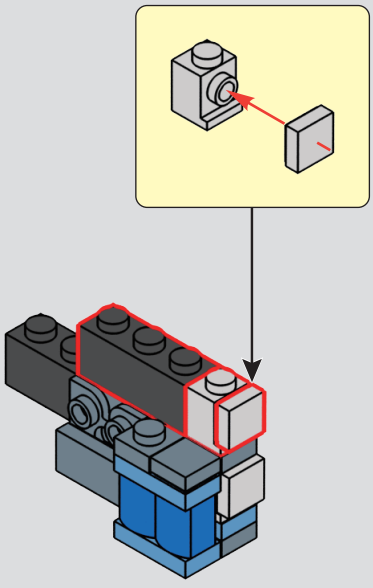

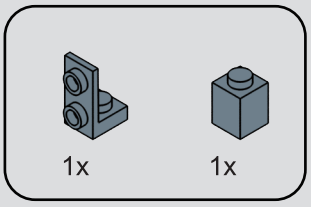

141

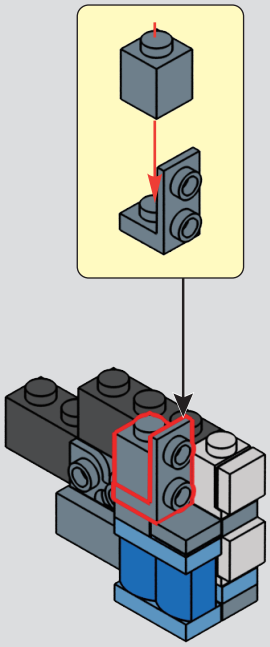

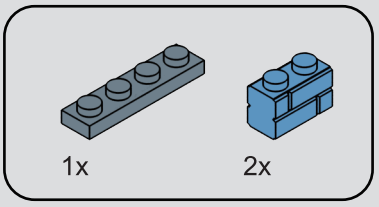

142

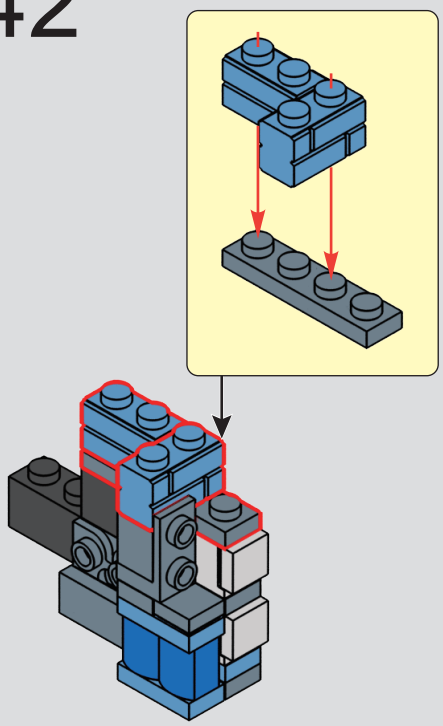

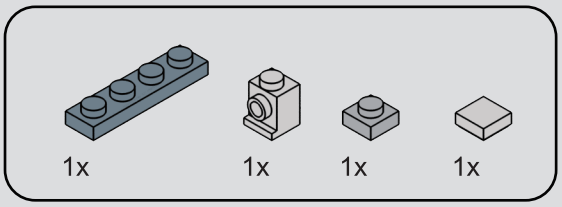

143

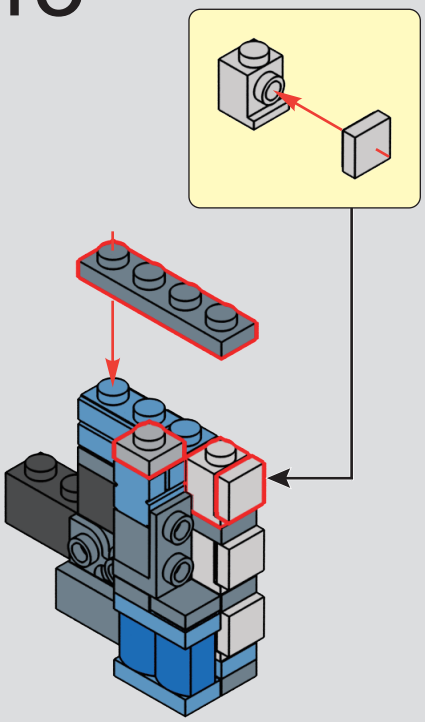

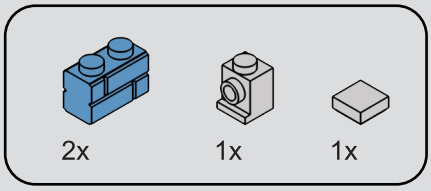

144

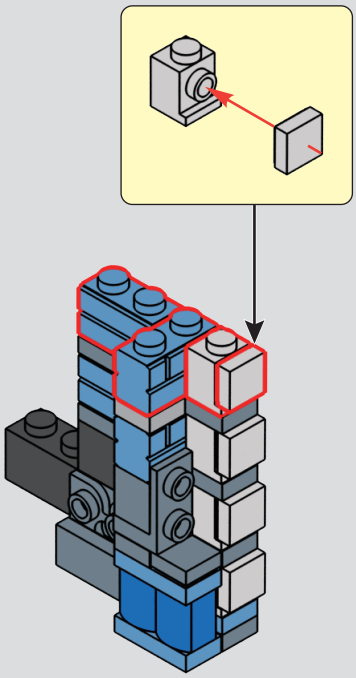

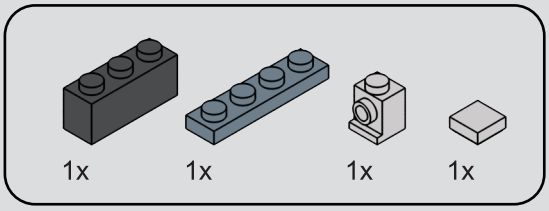

145

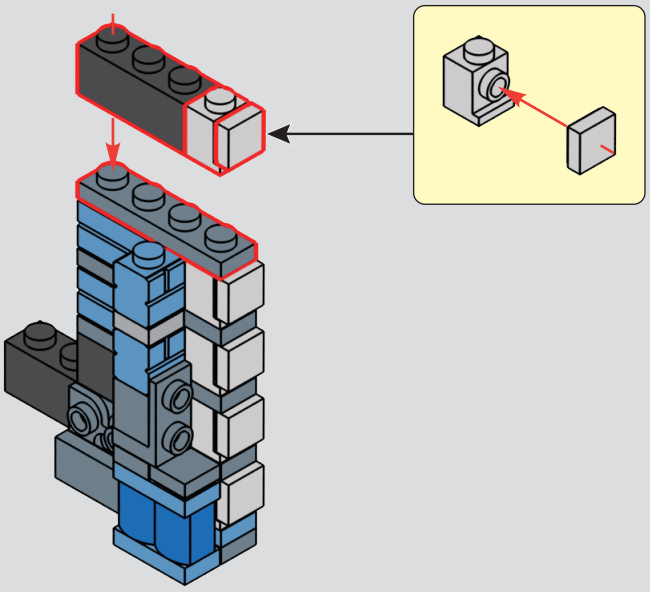

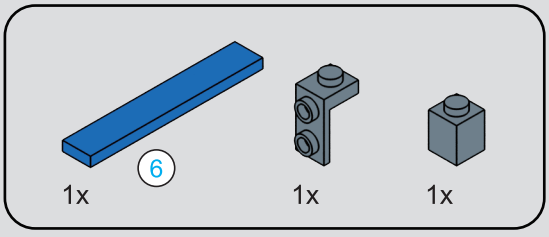



146

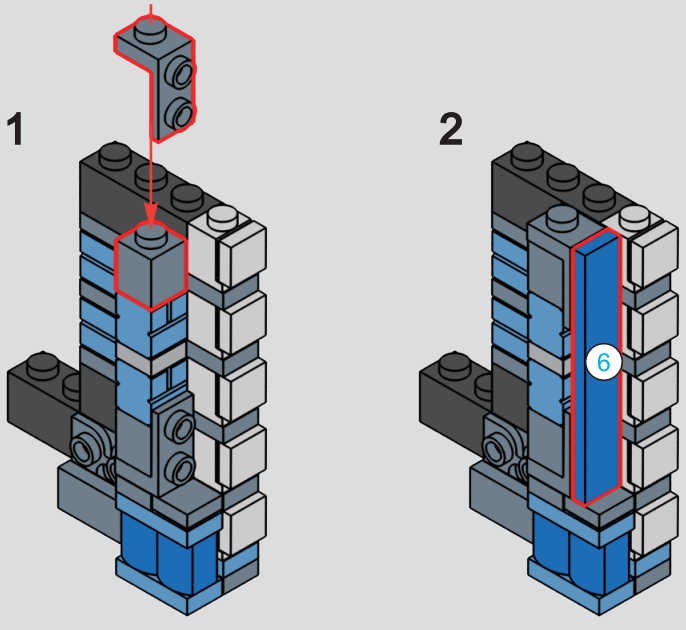

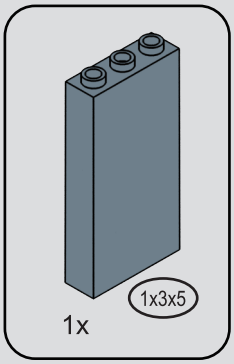

147

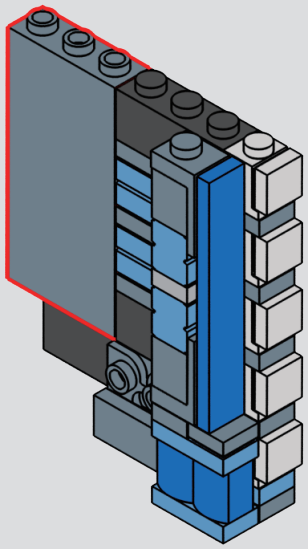

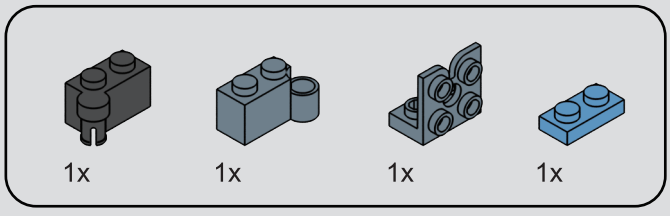

148

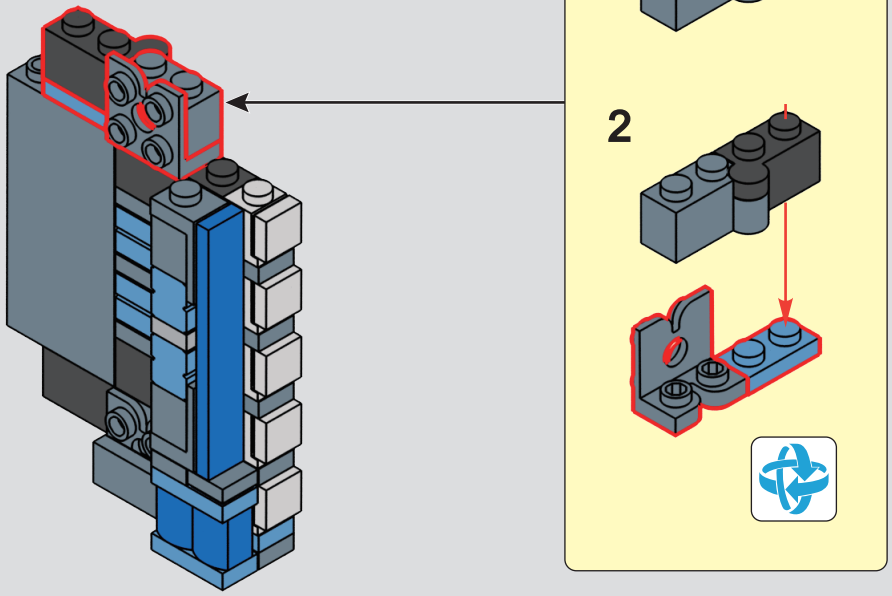

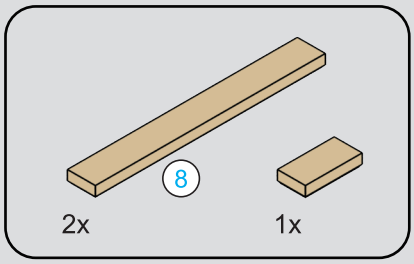



149

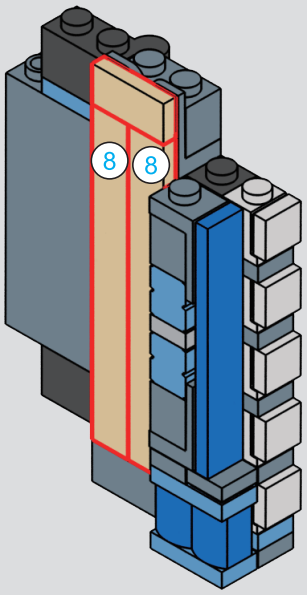

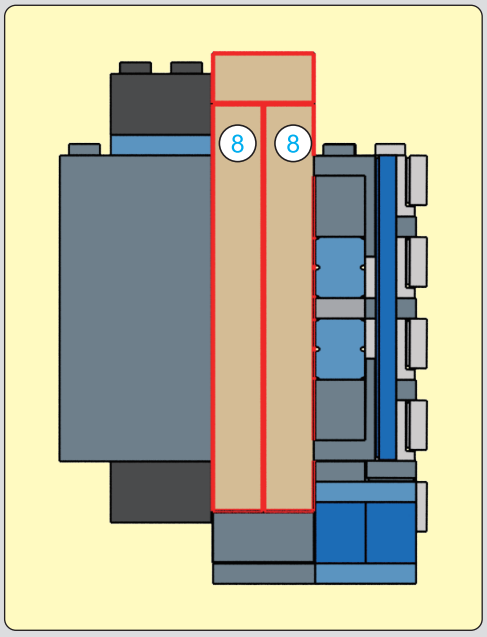

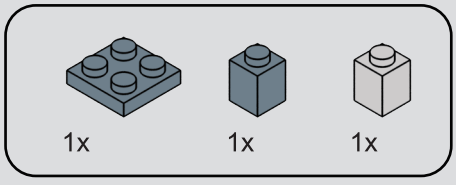

150

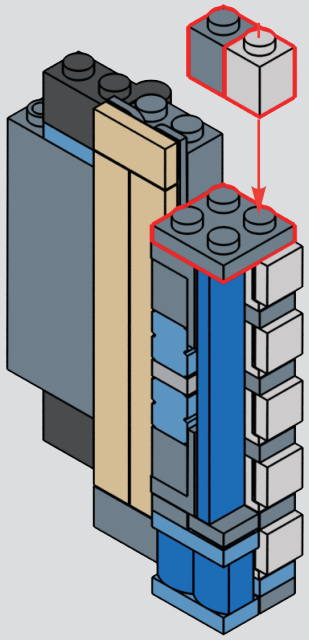

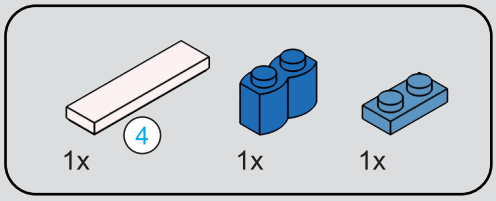

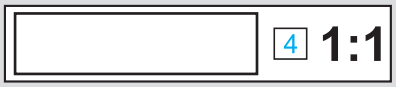

151

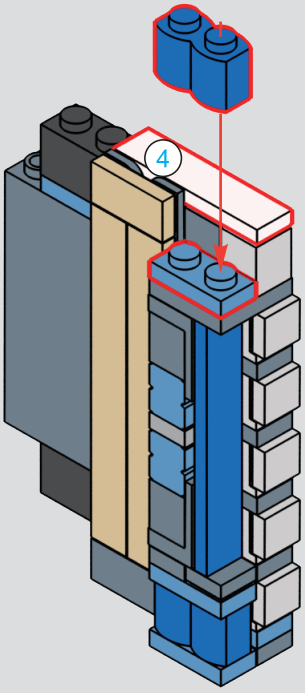

152

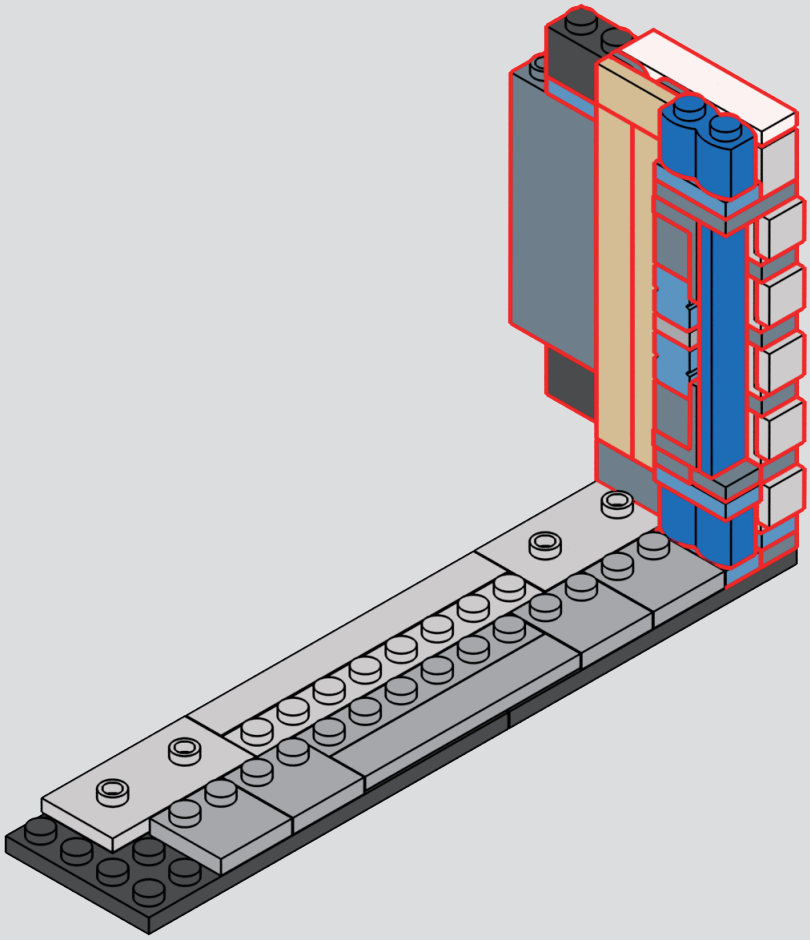

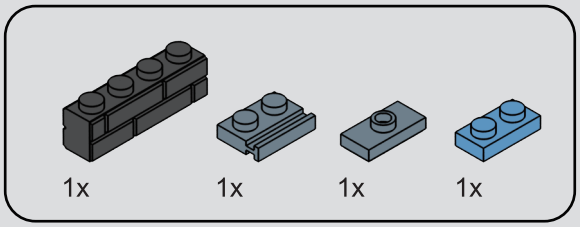

153

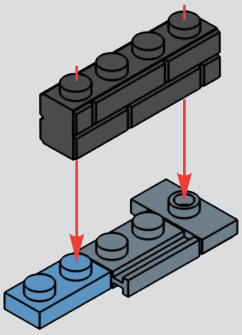

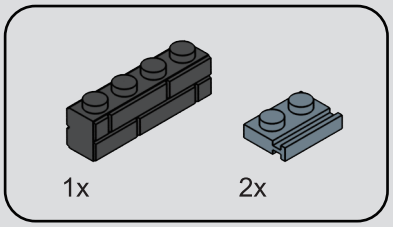

154

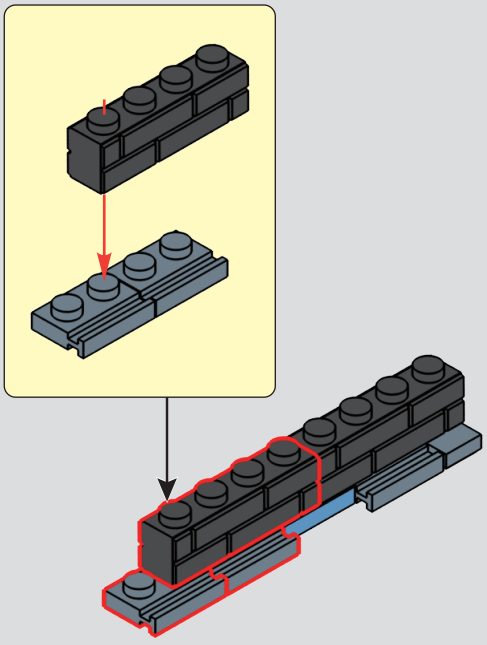

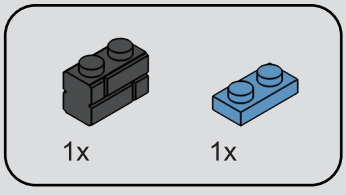

155

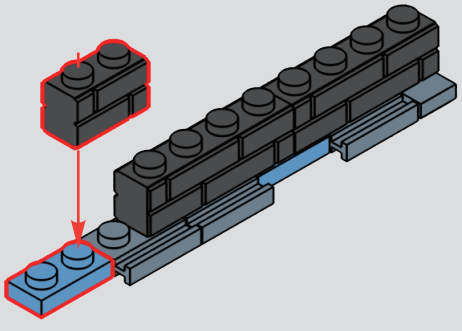

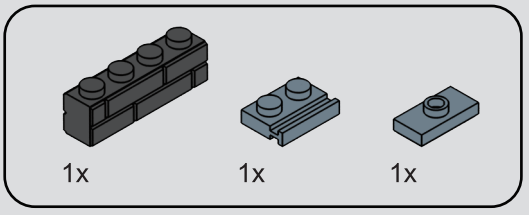

156

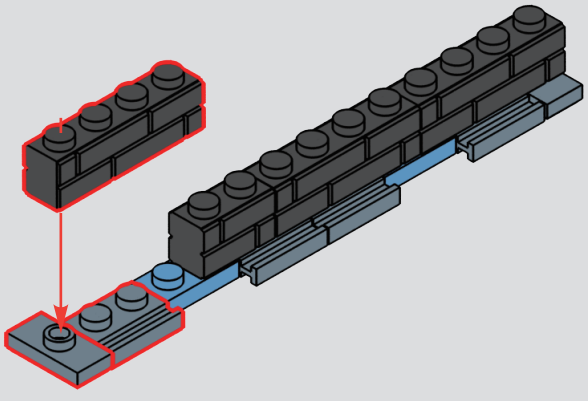

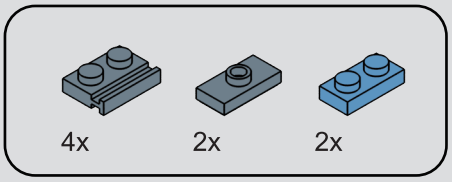

157

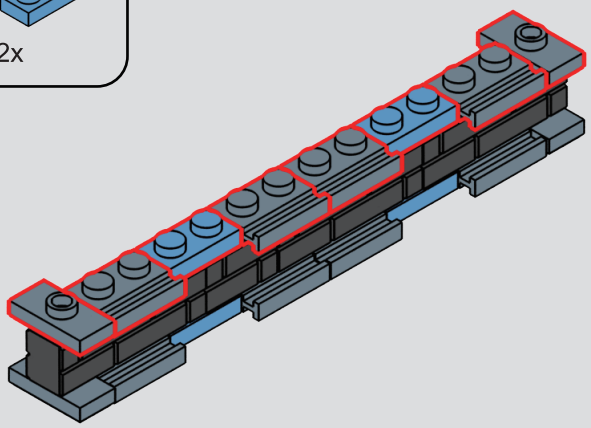

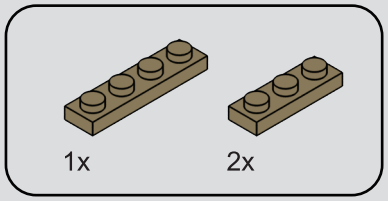

158

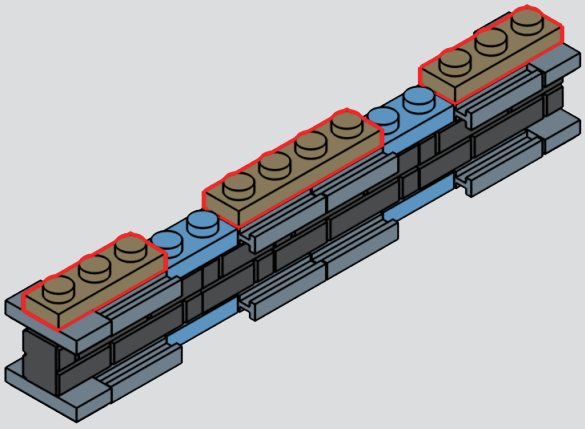

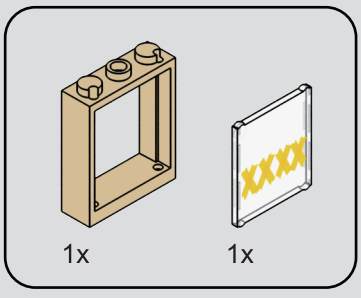

159

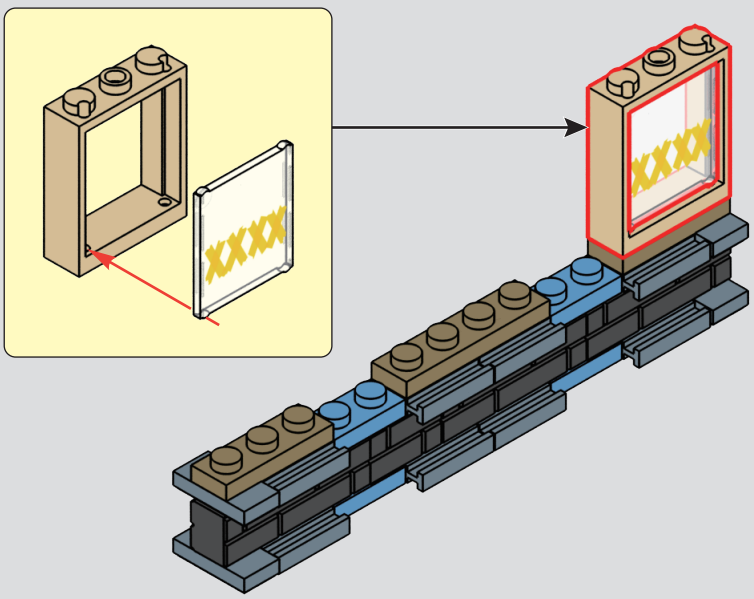

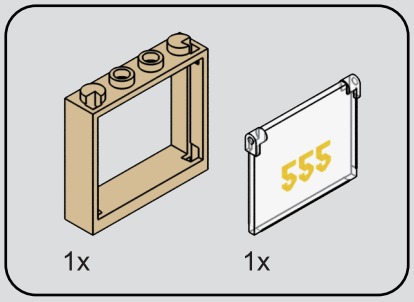

160

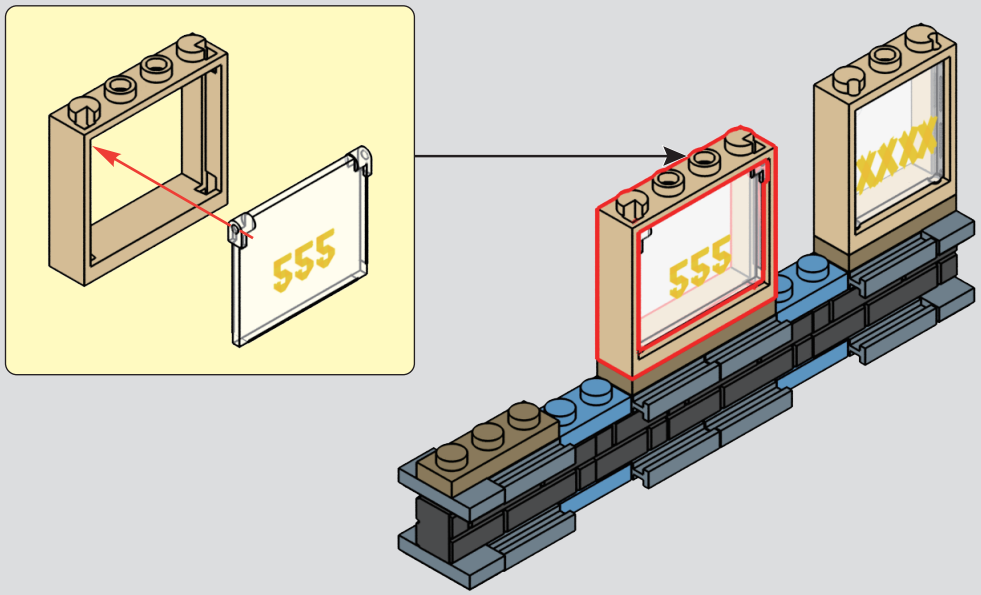

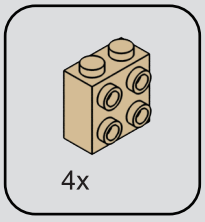

161

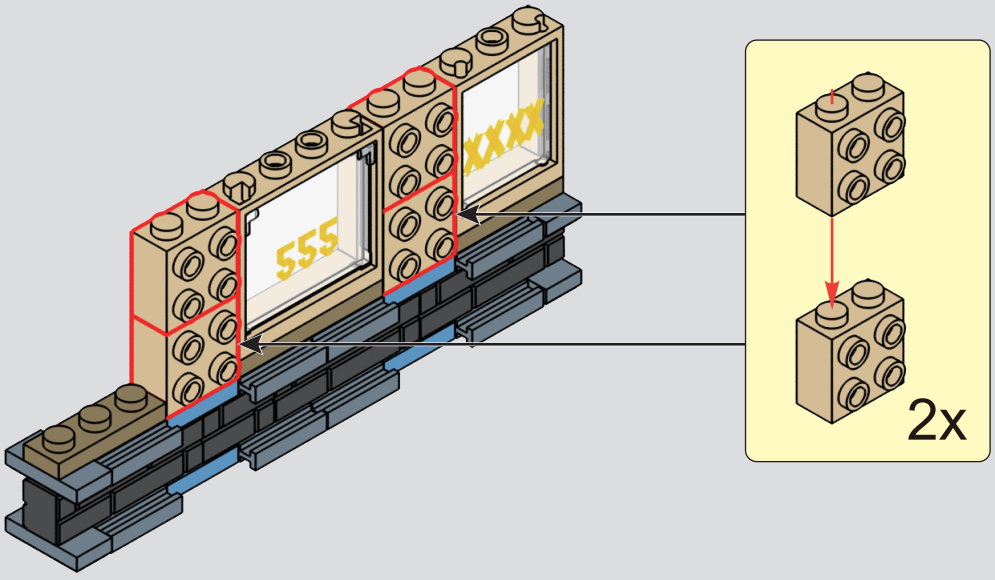

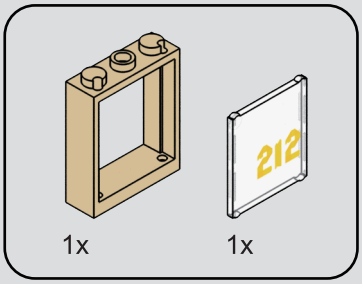

162

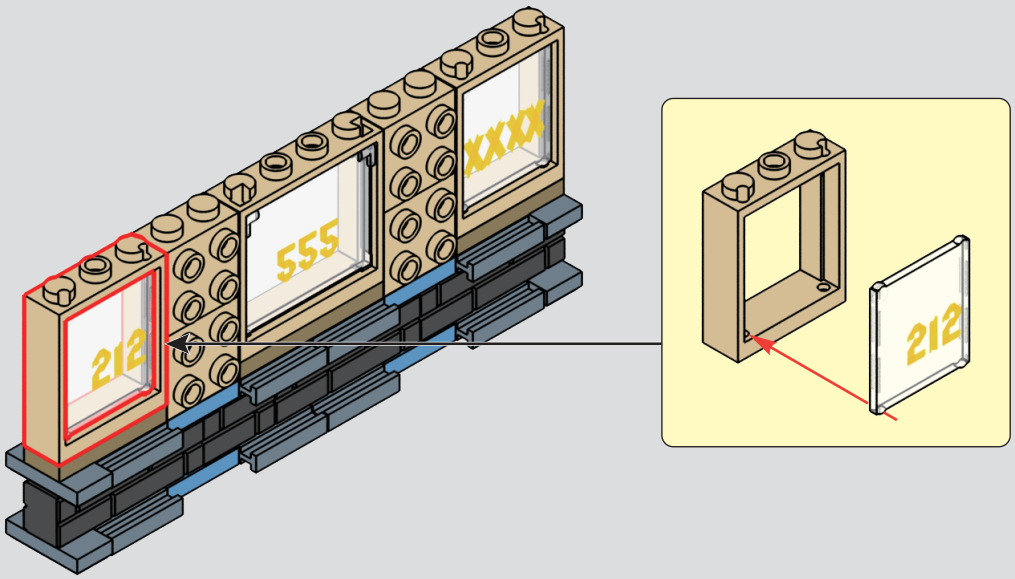

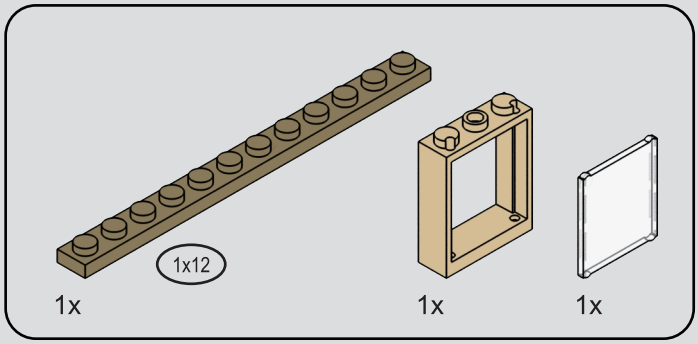

163

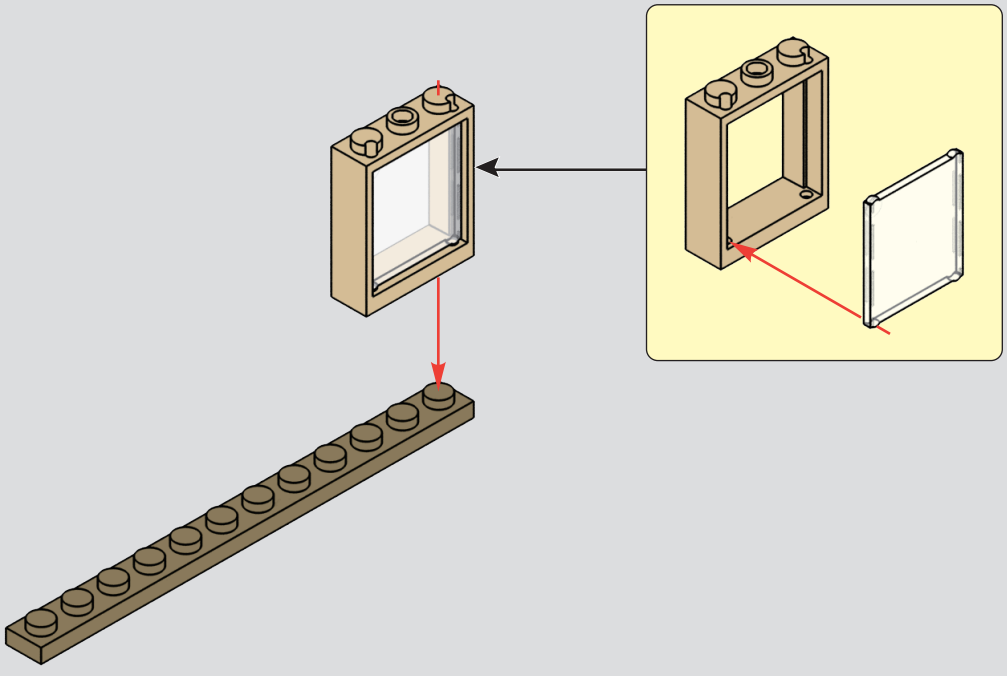

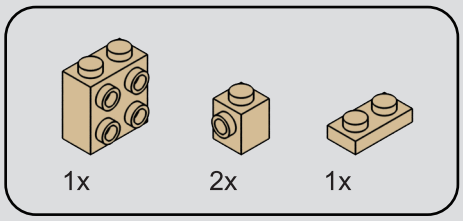

164

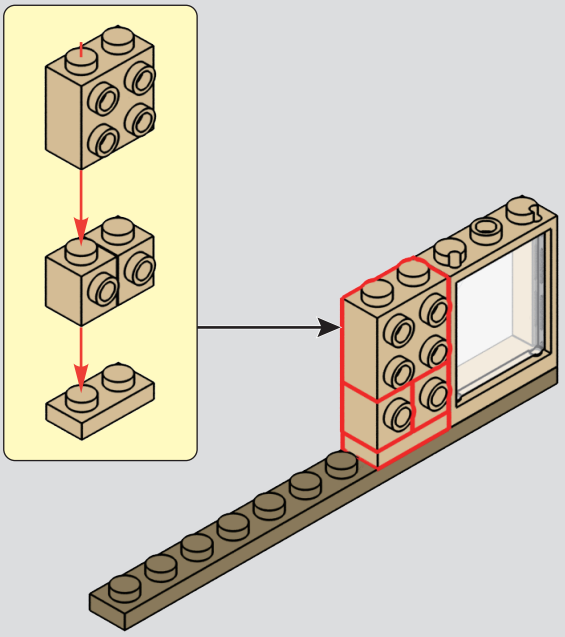

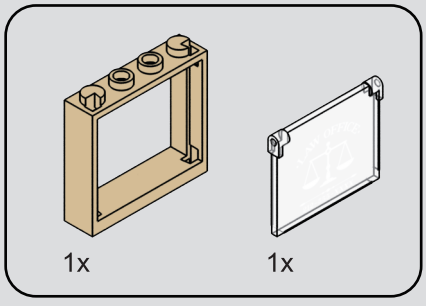

165

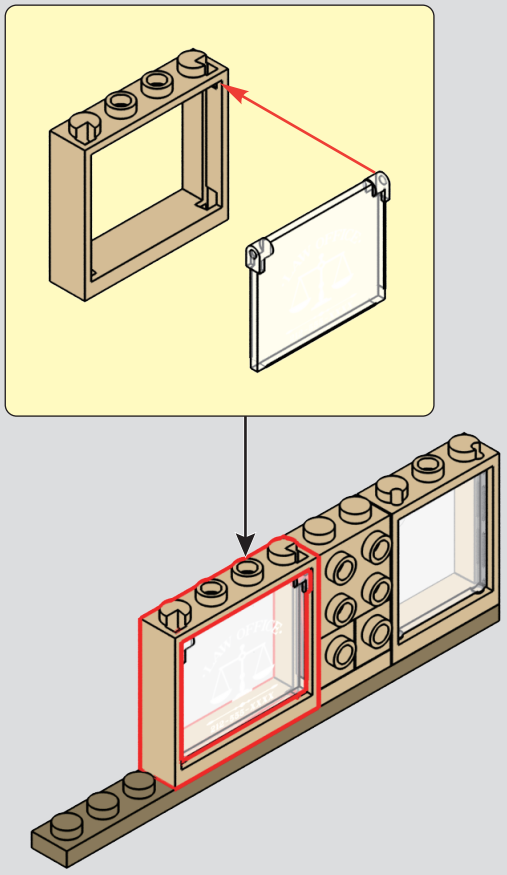

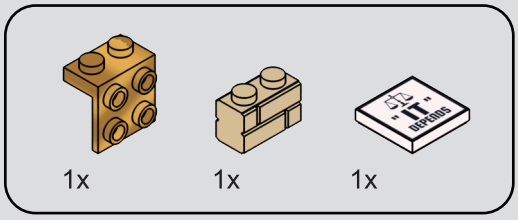

166

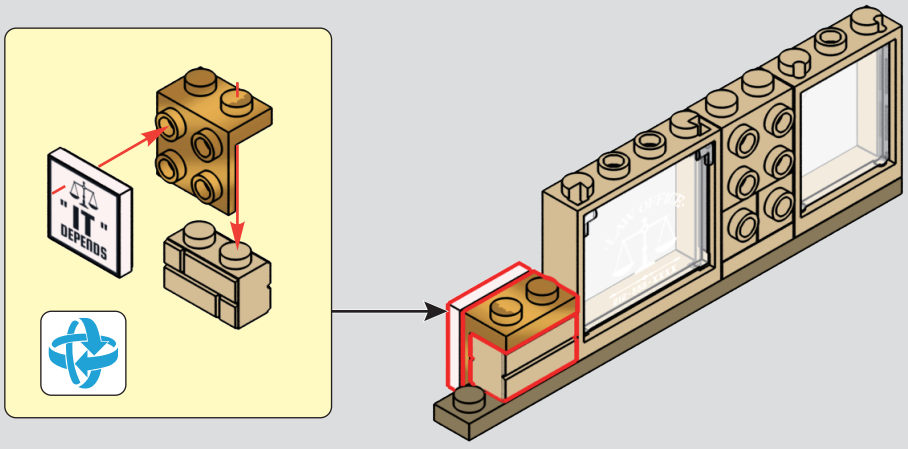

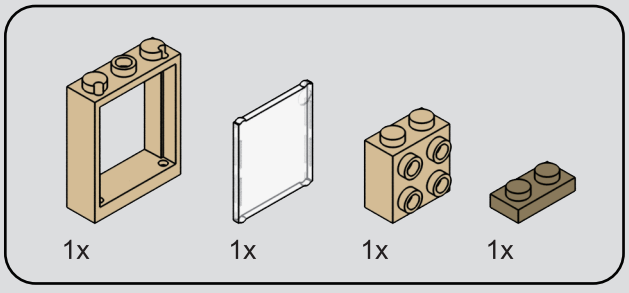

167

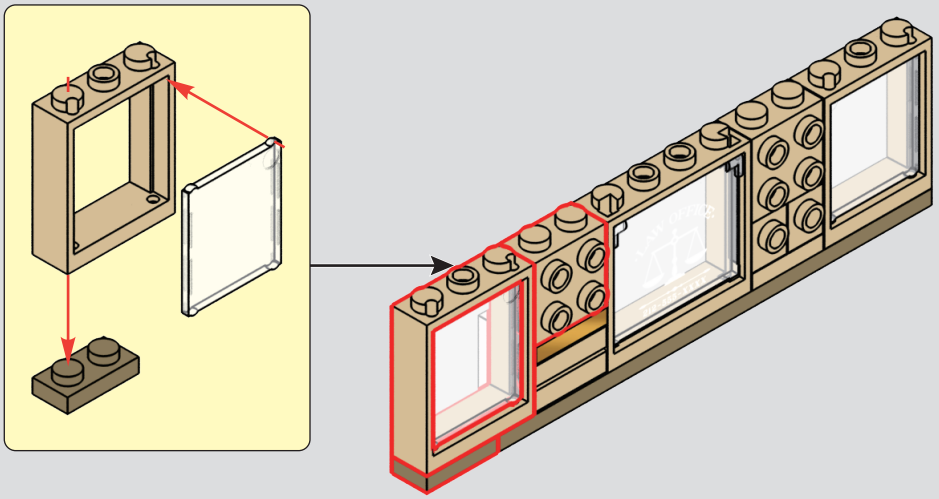

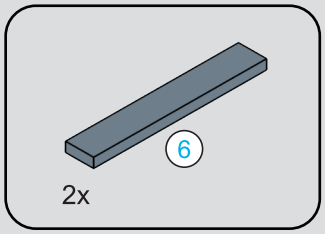



168

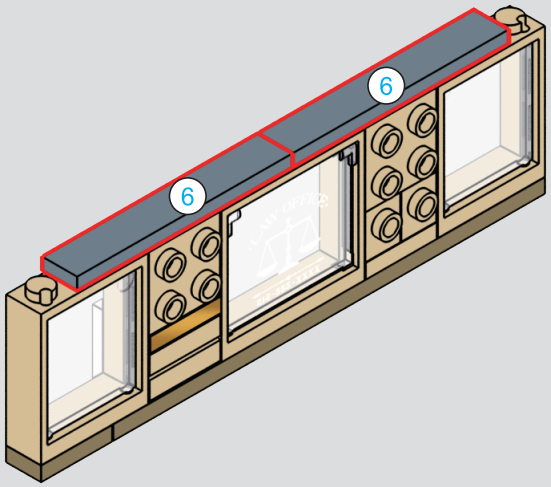

169

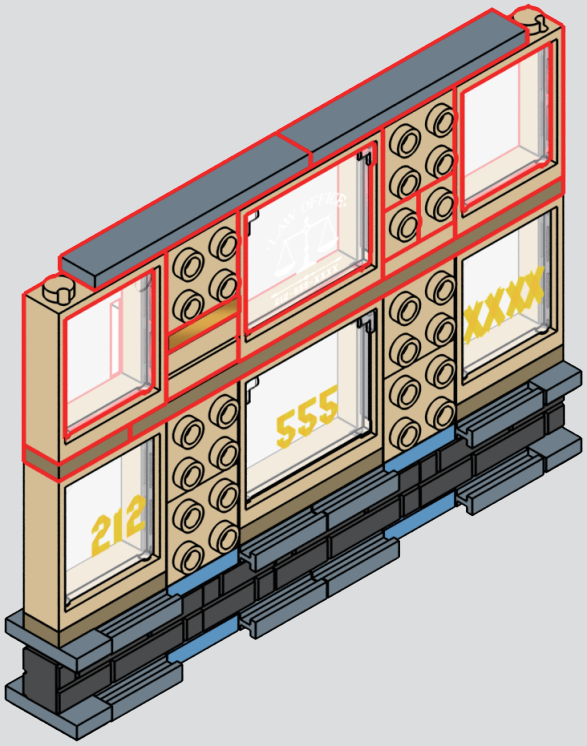

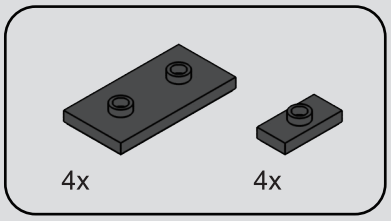

170

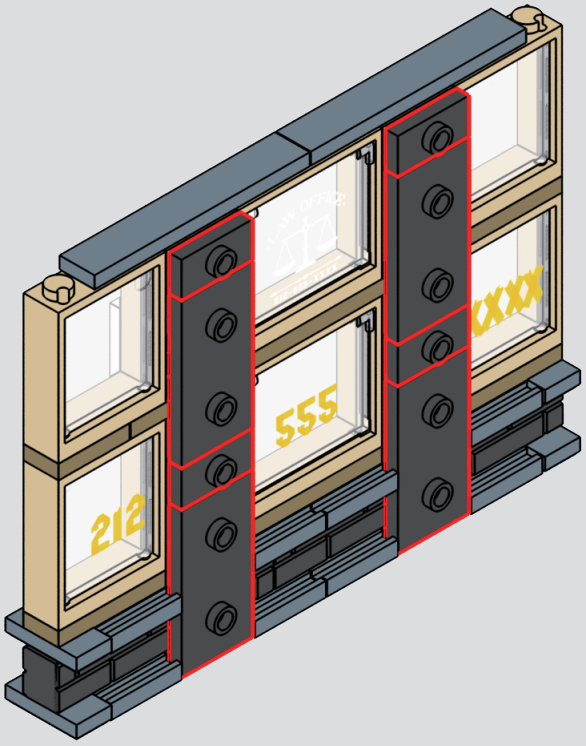

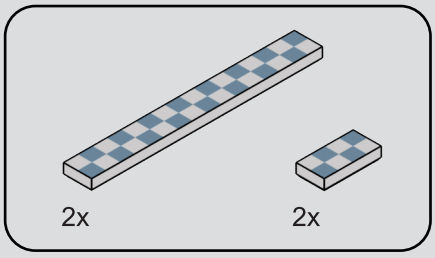

171

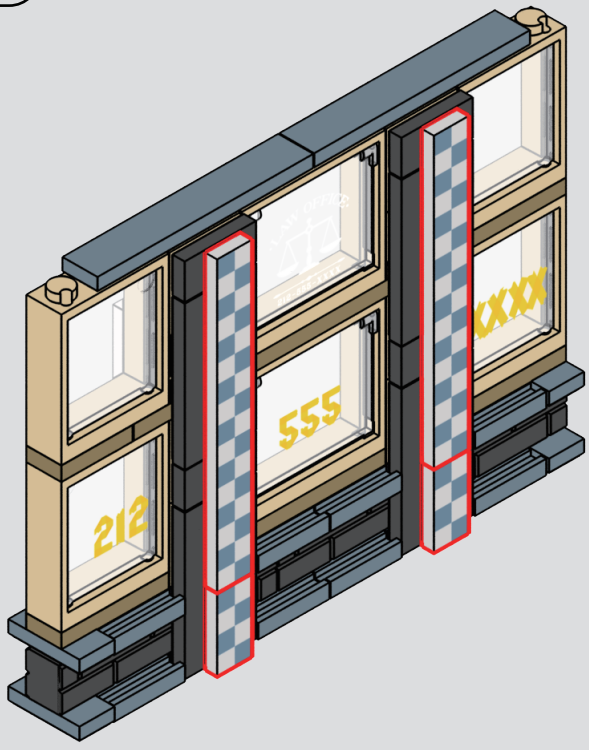

172

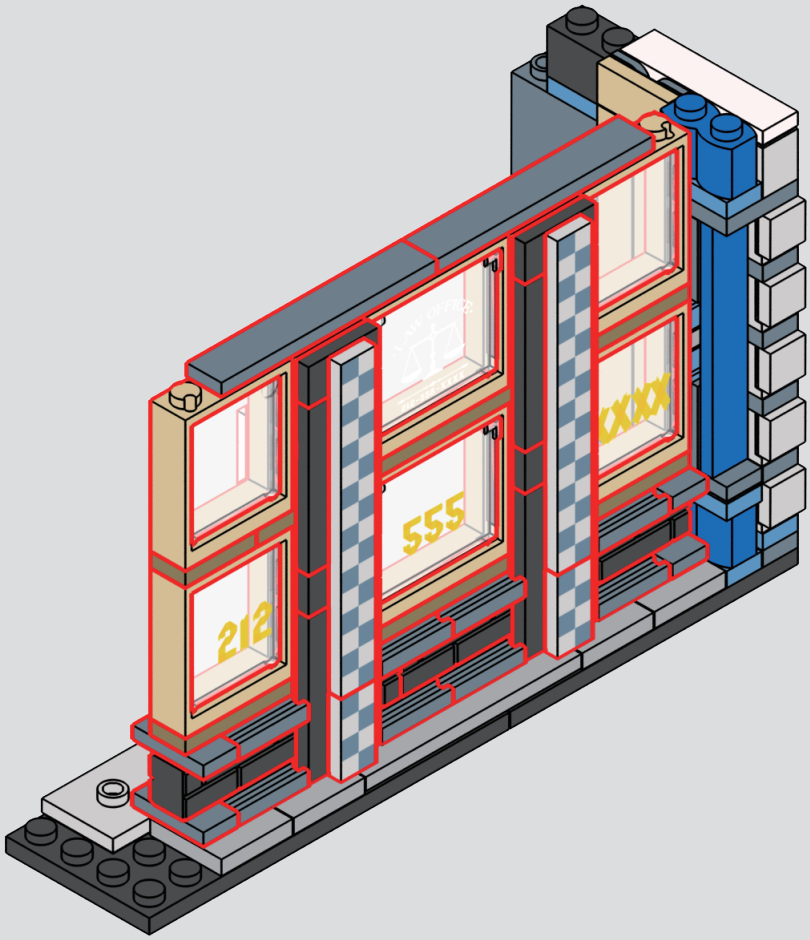

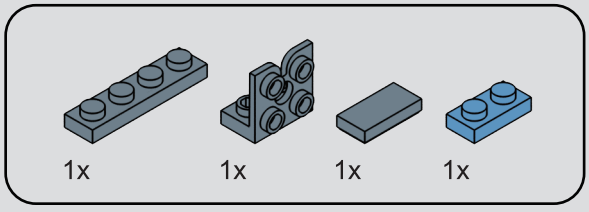

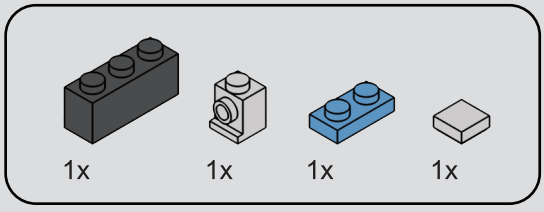

173

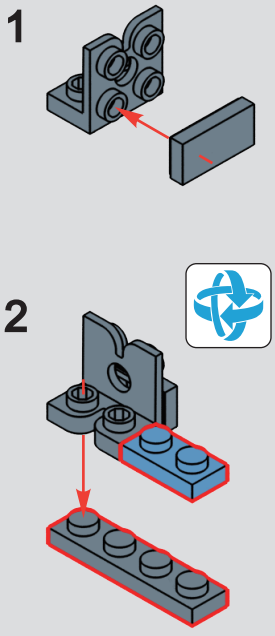

174

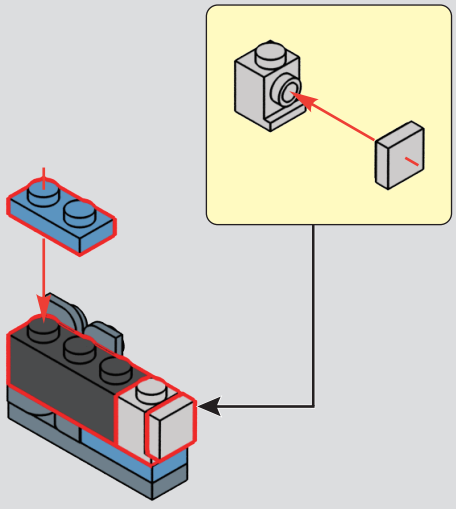

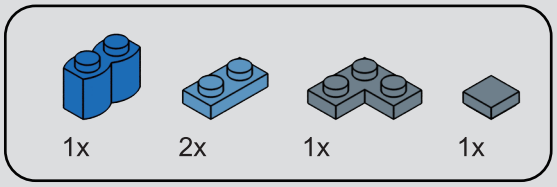

175

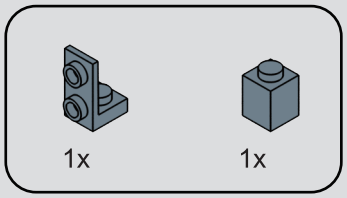

176

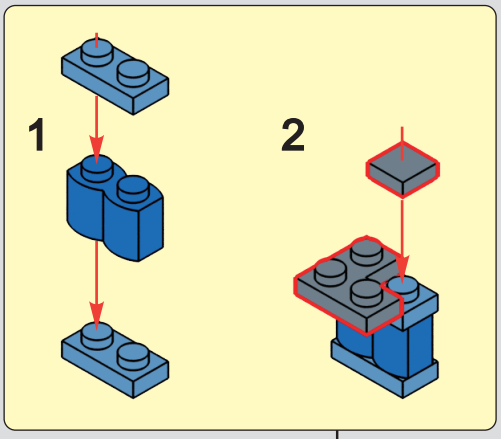

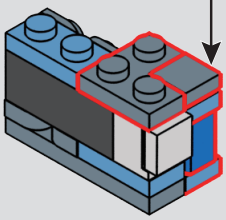

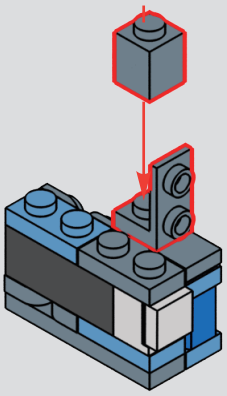

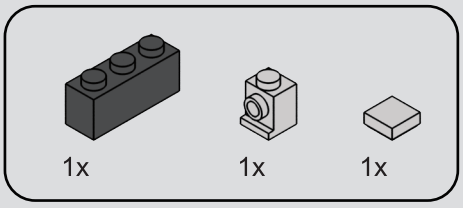

177

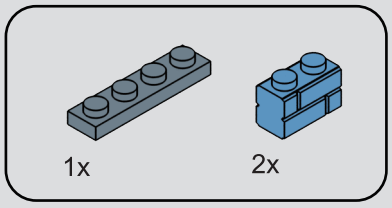

178

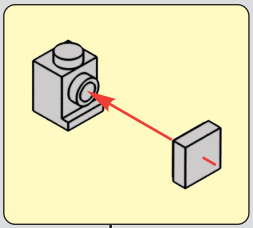

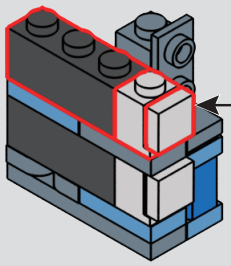

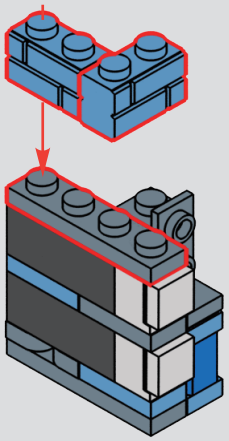

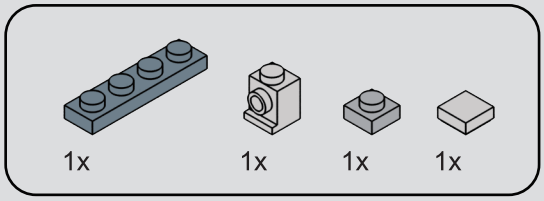

179

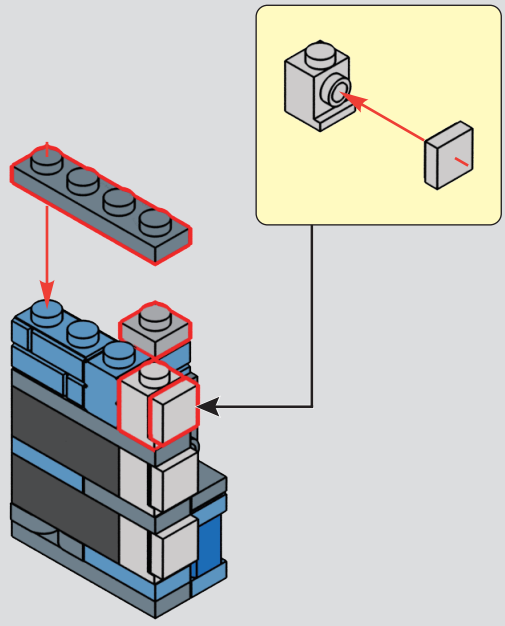

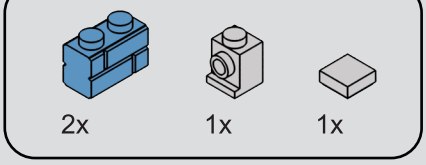

180

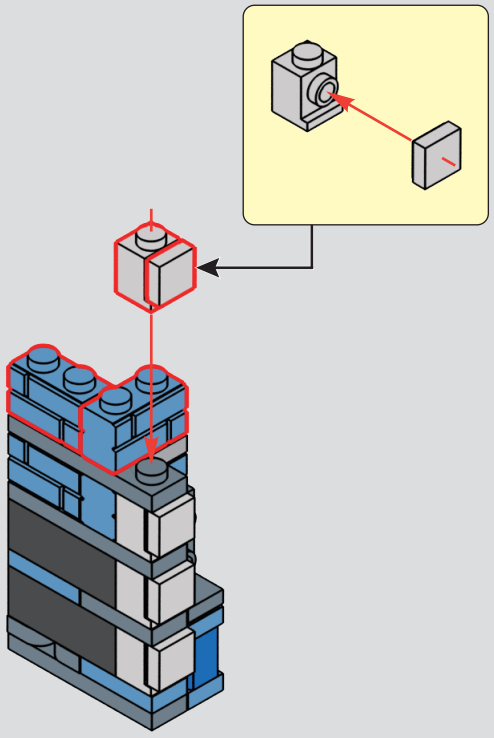

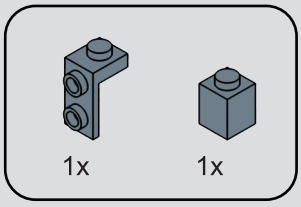

181

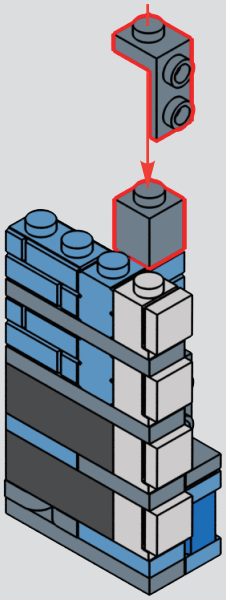

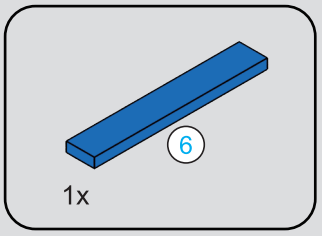

182

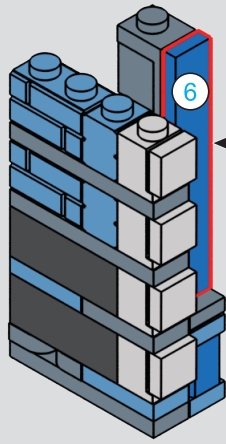

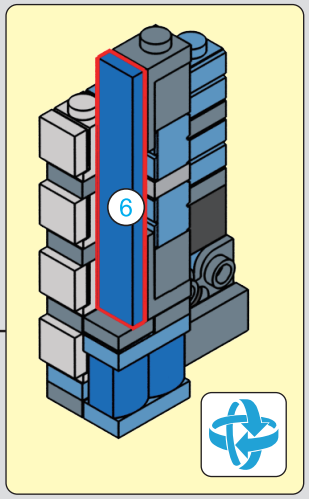



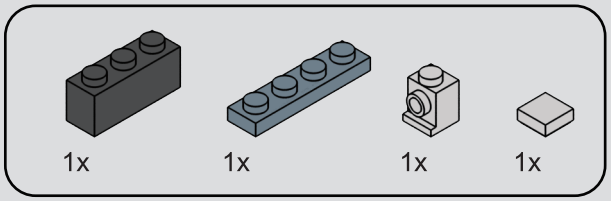

183

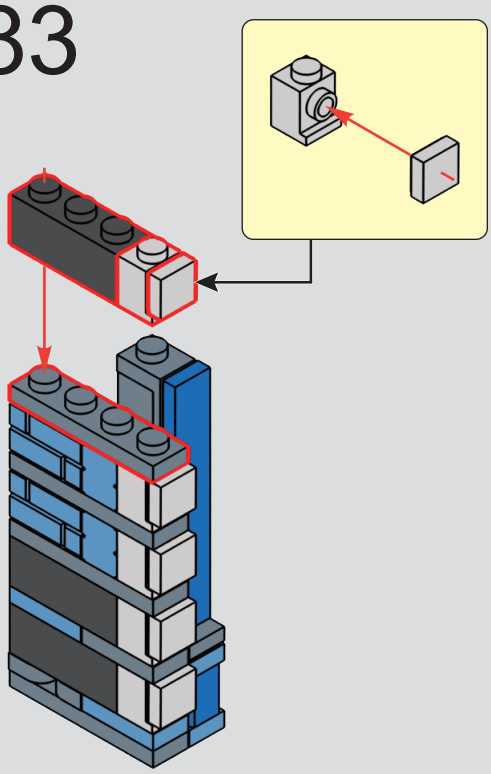

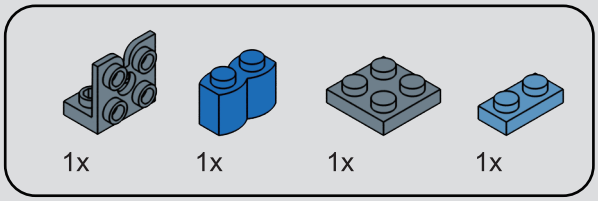

184

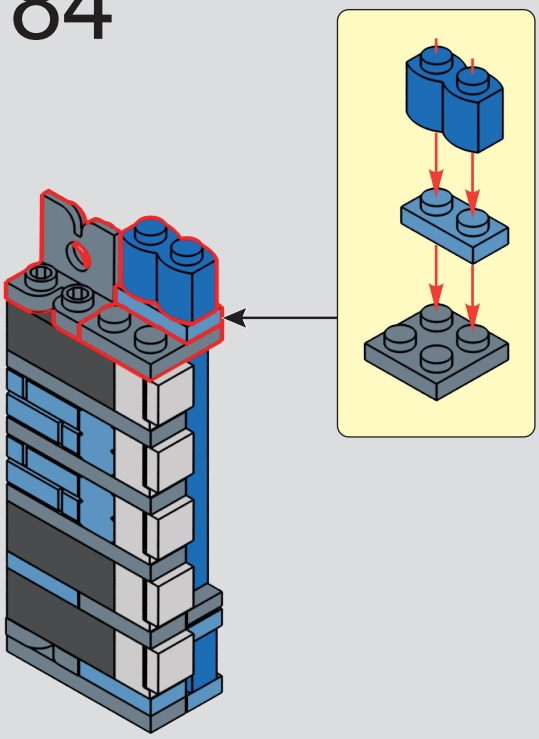

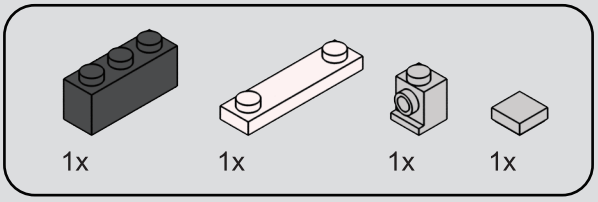

185

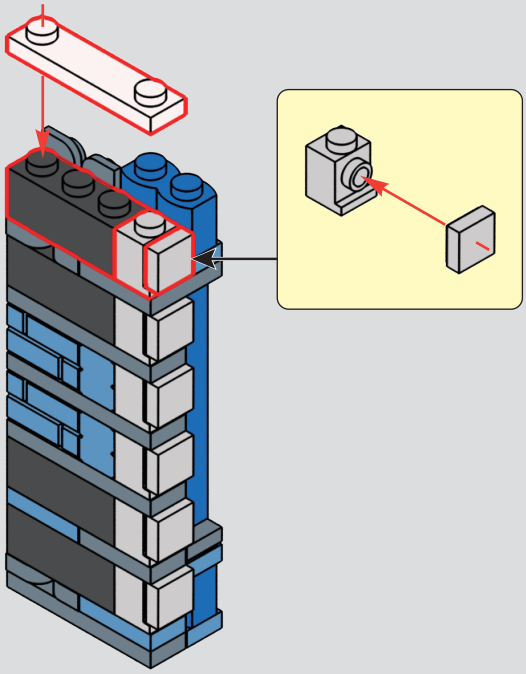

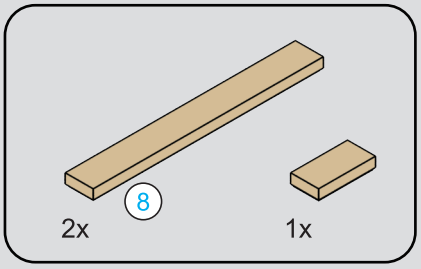

186

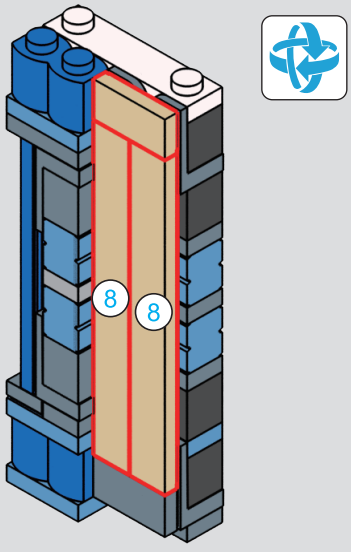



187

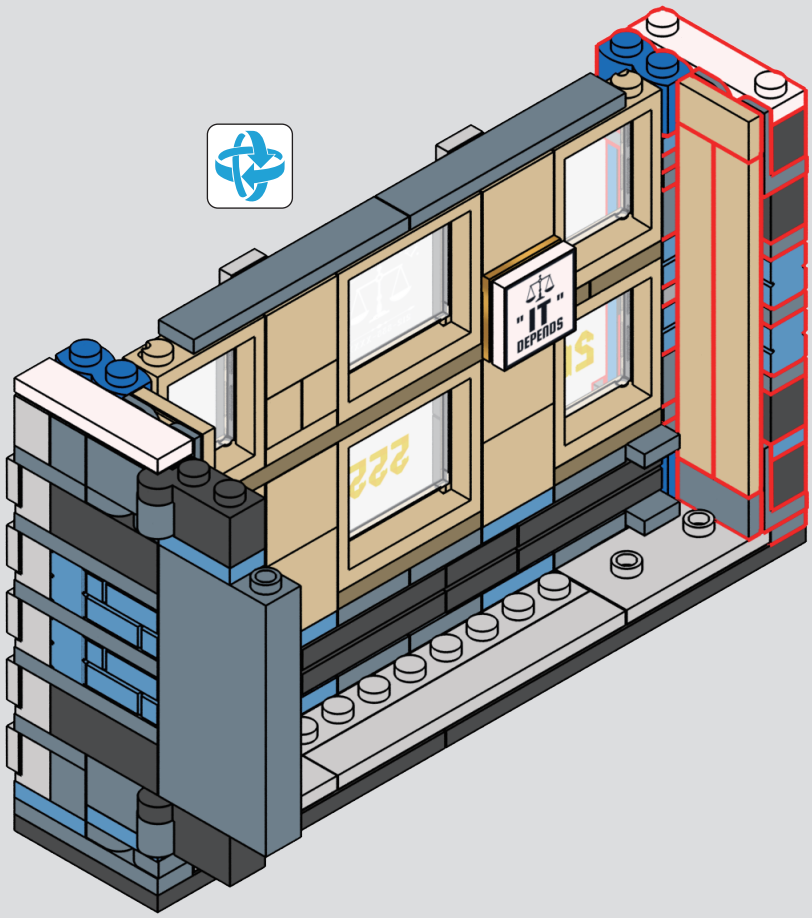

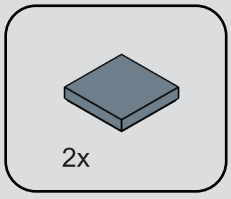

188

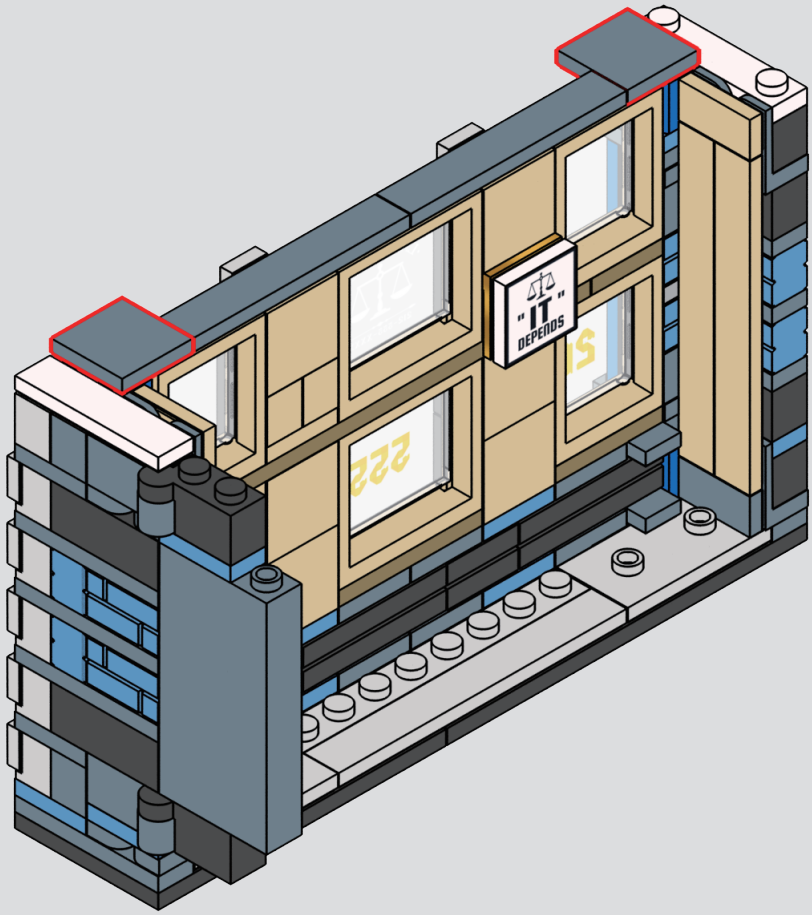

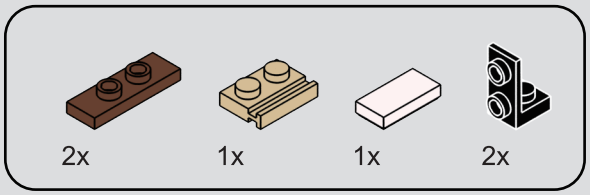

189

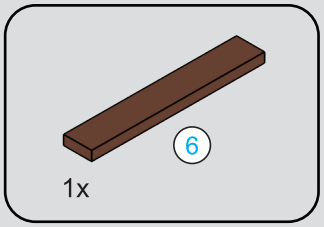

190

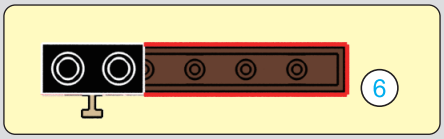

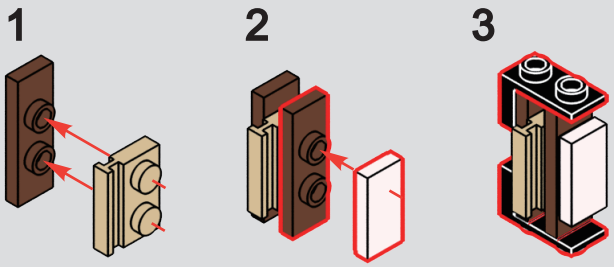

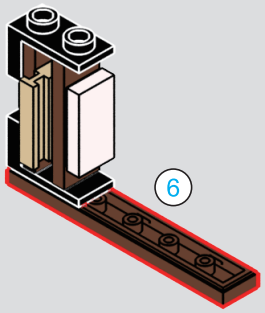



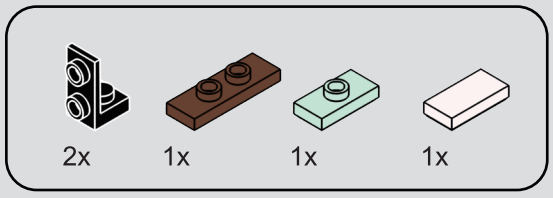

191

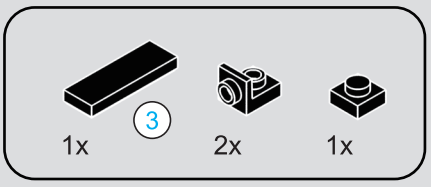

192

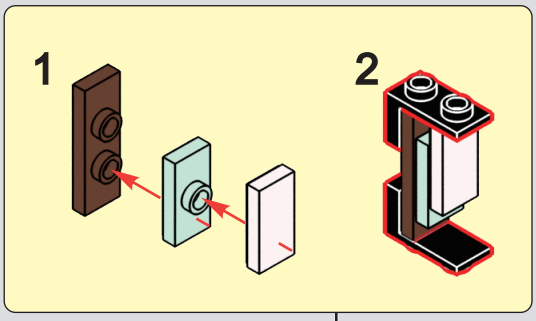

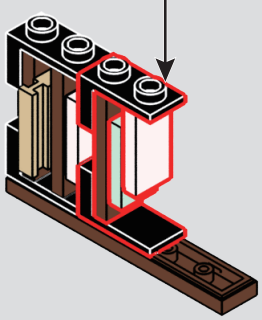

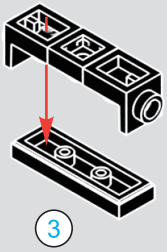

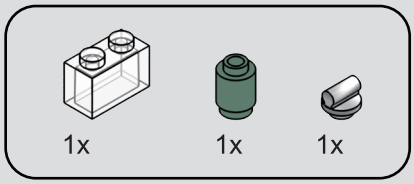

193

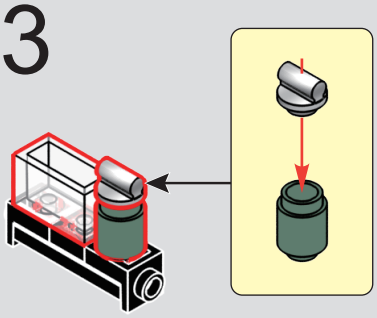

194

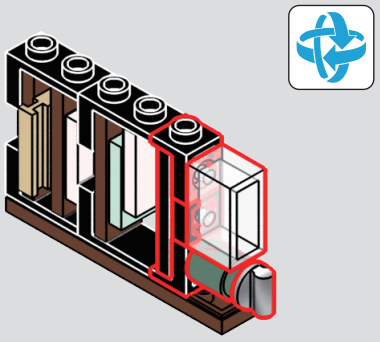

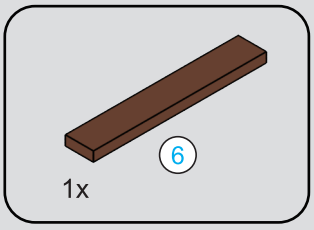



195

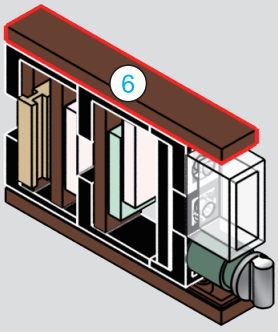

196

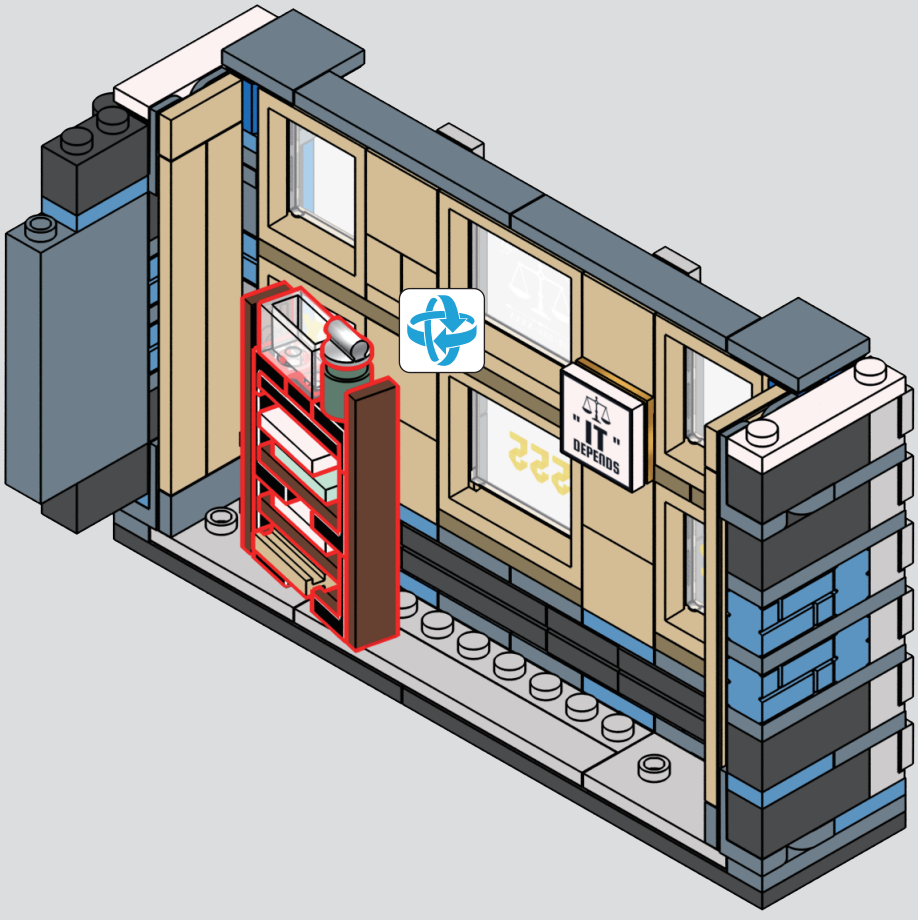

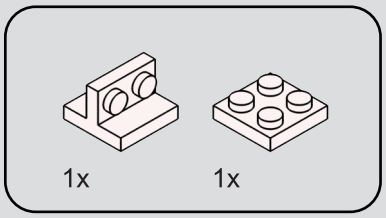

197

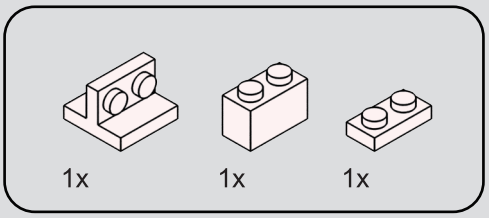

198

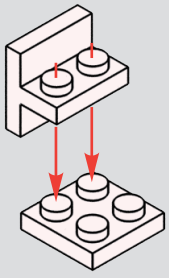

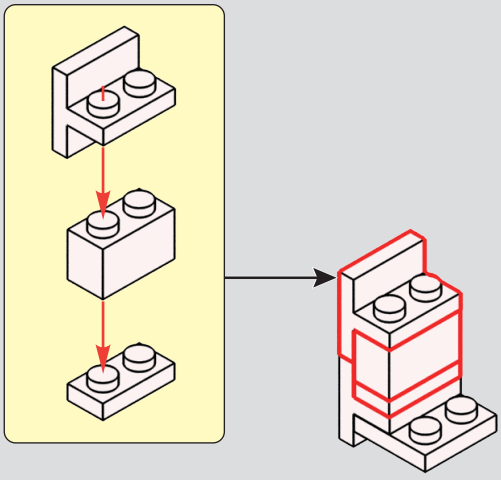

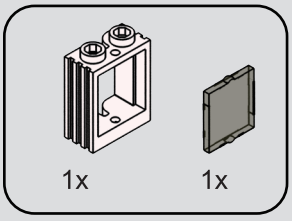

199

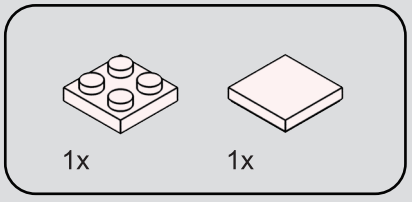

200

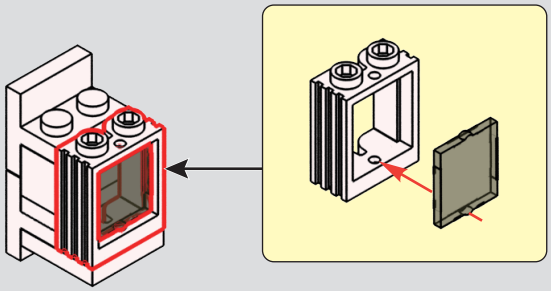

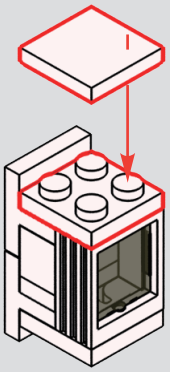

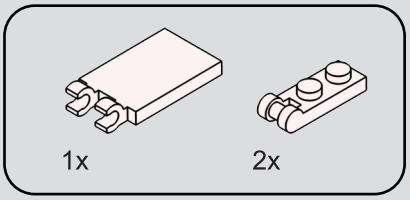

201

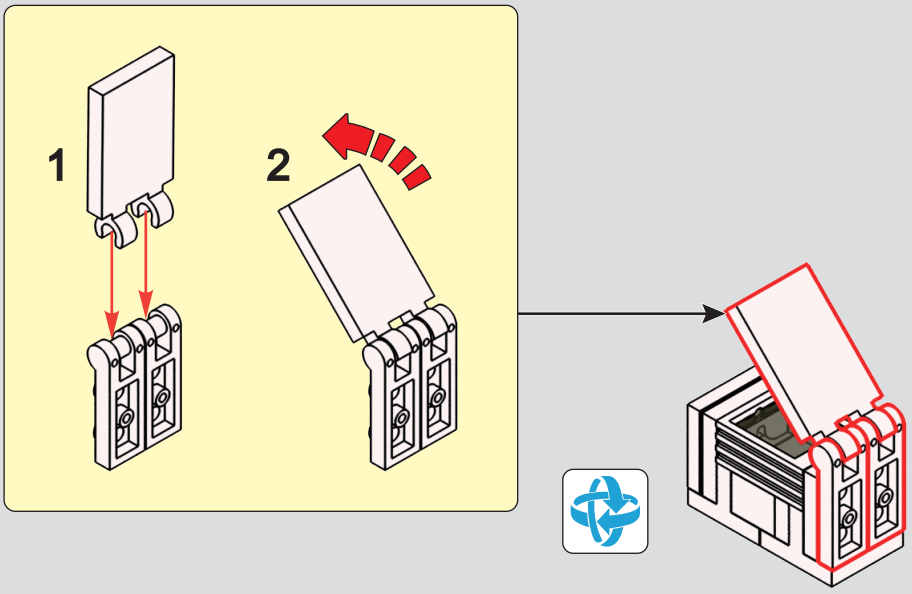

202

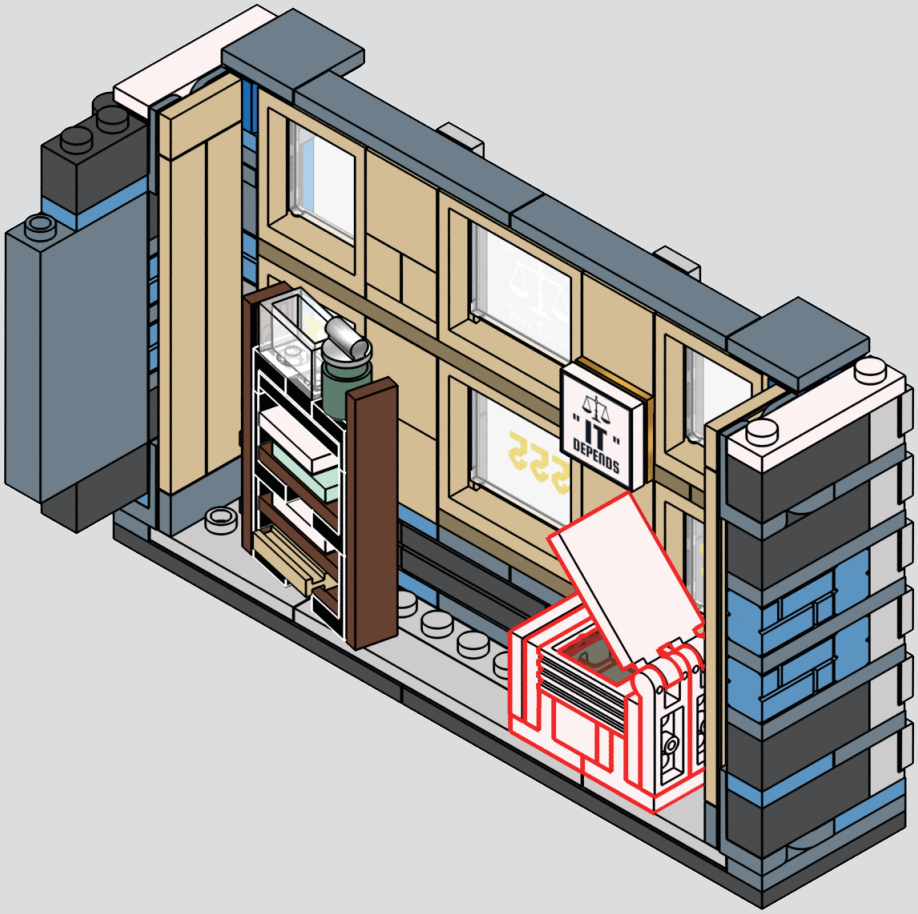

203

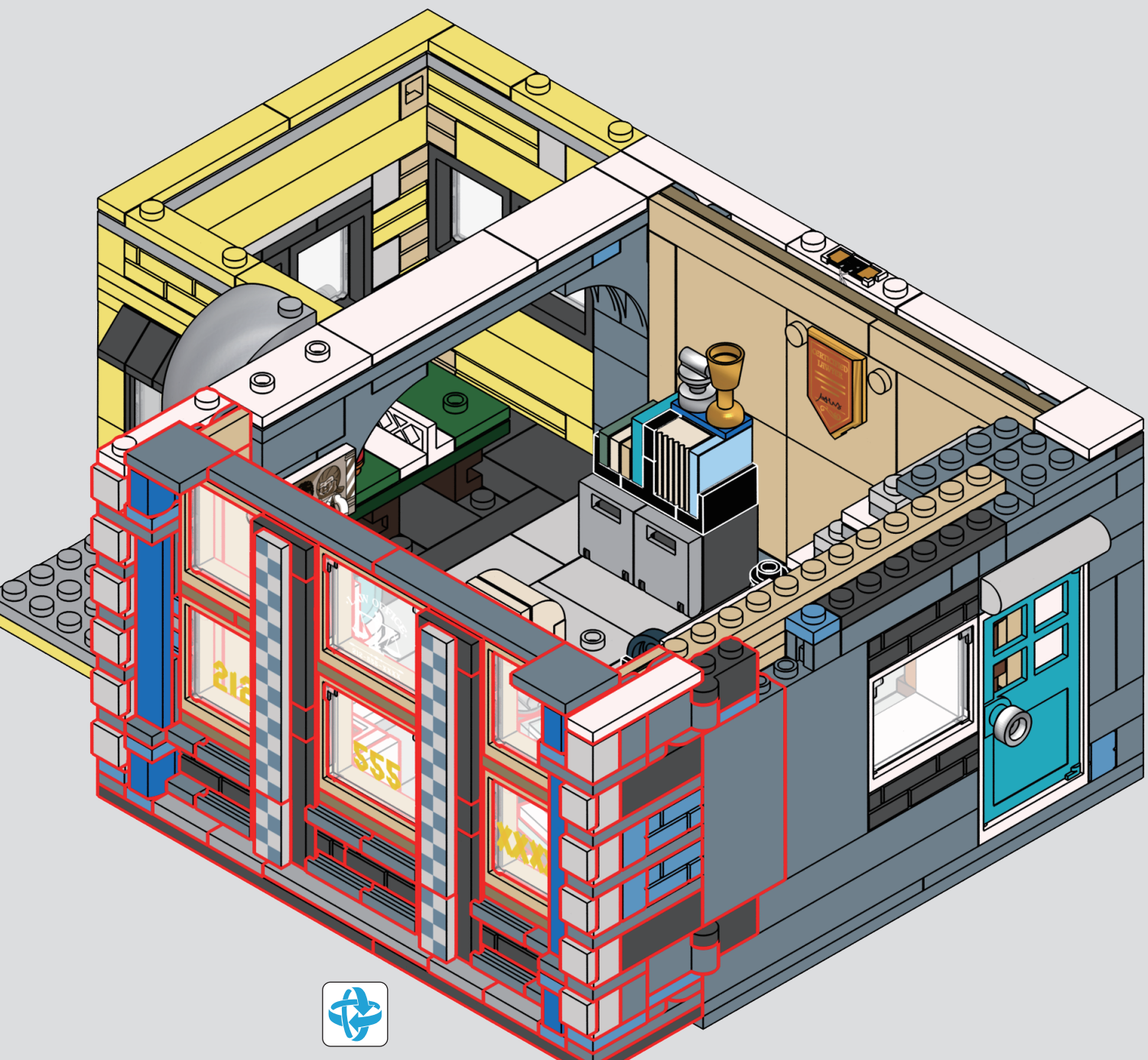

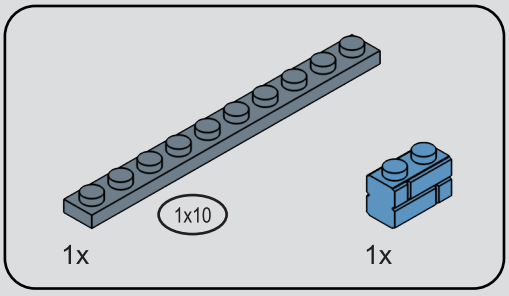

204

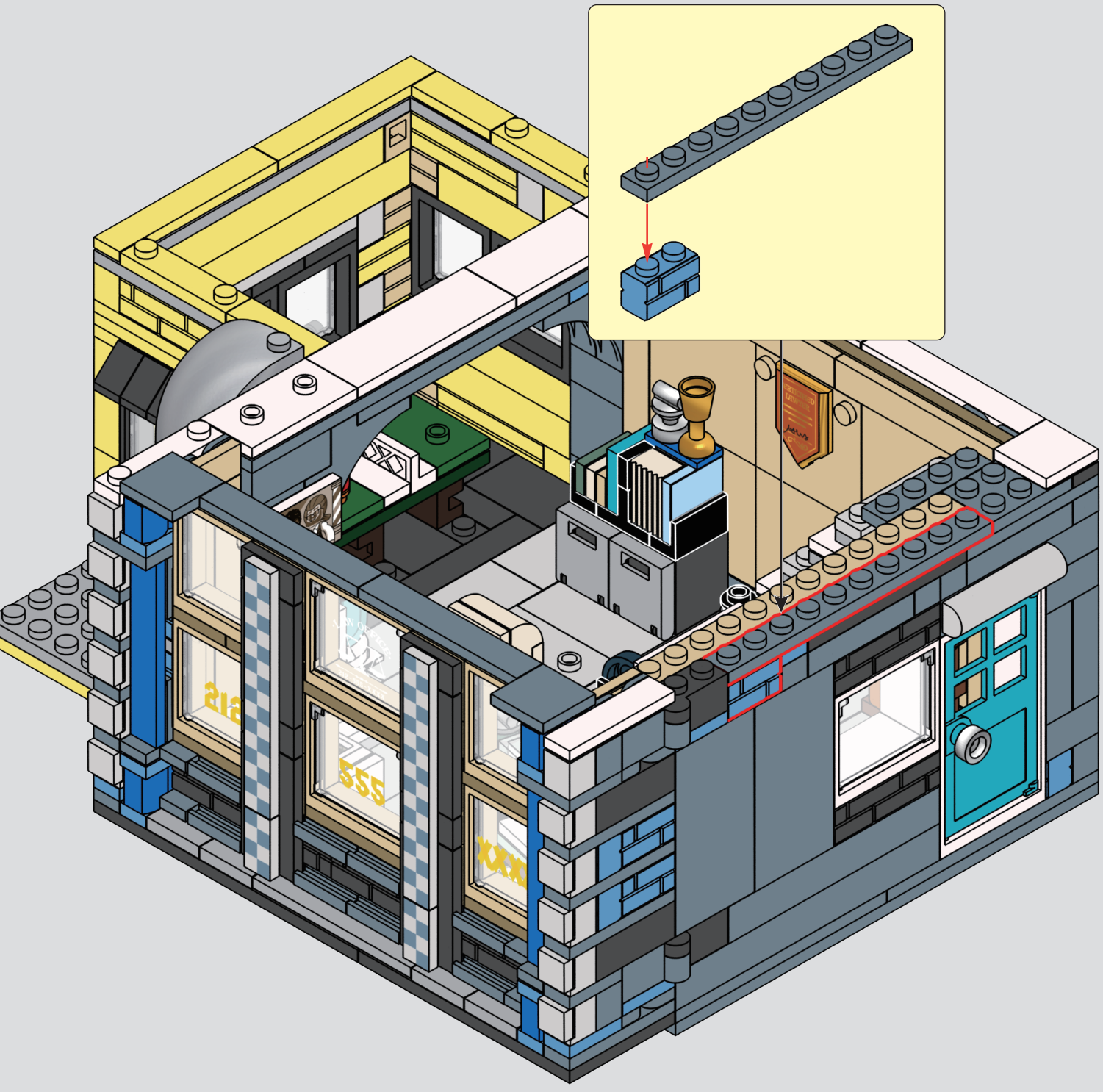

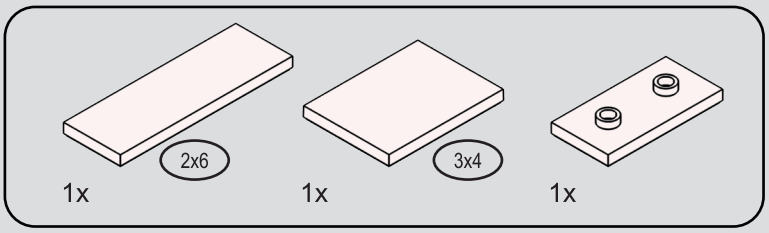

205

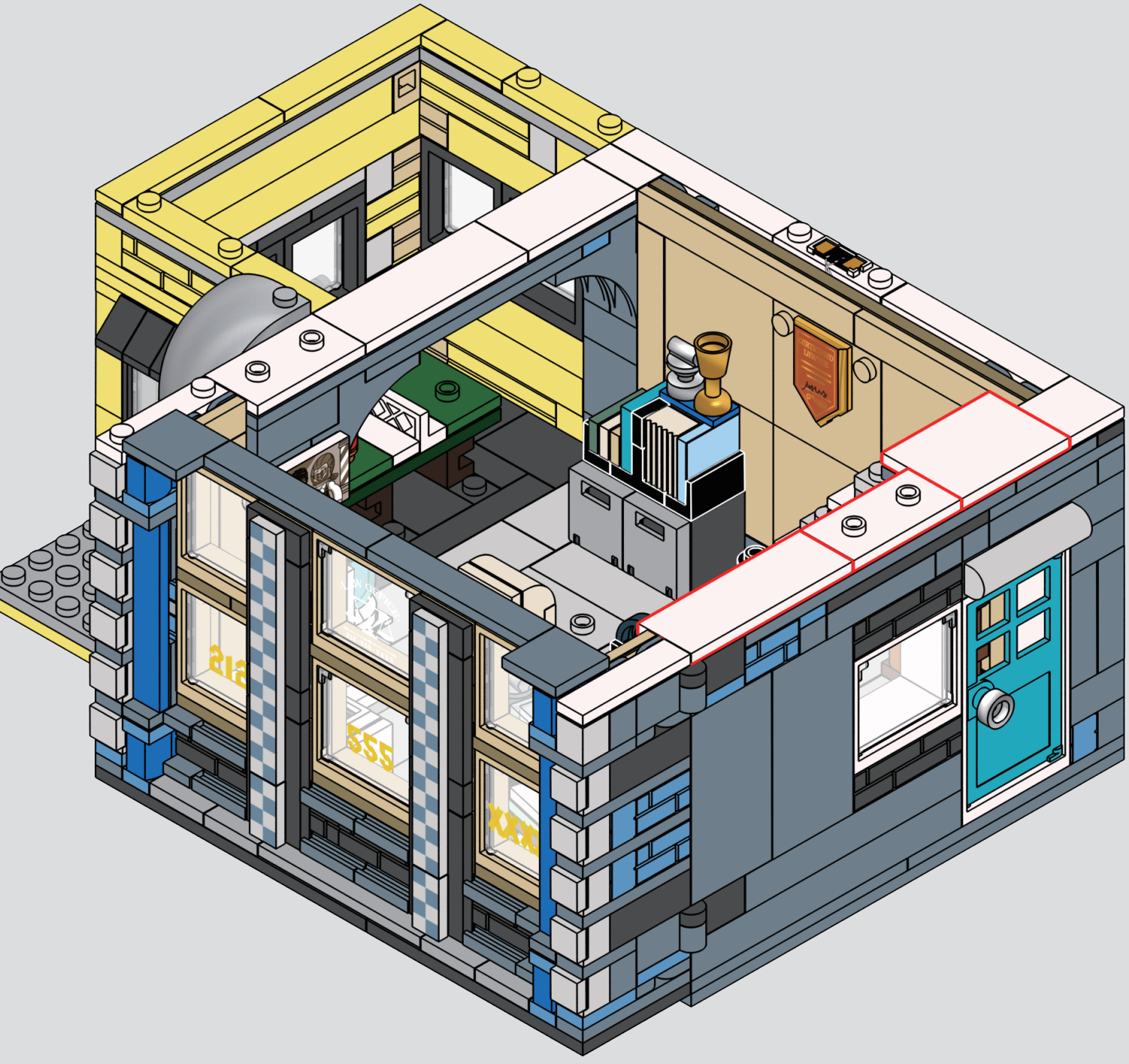

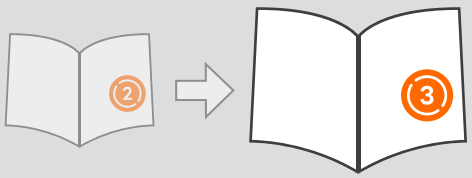

206



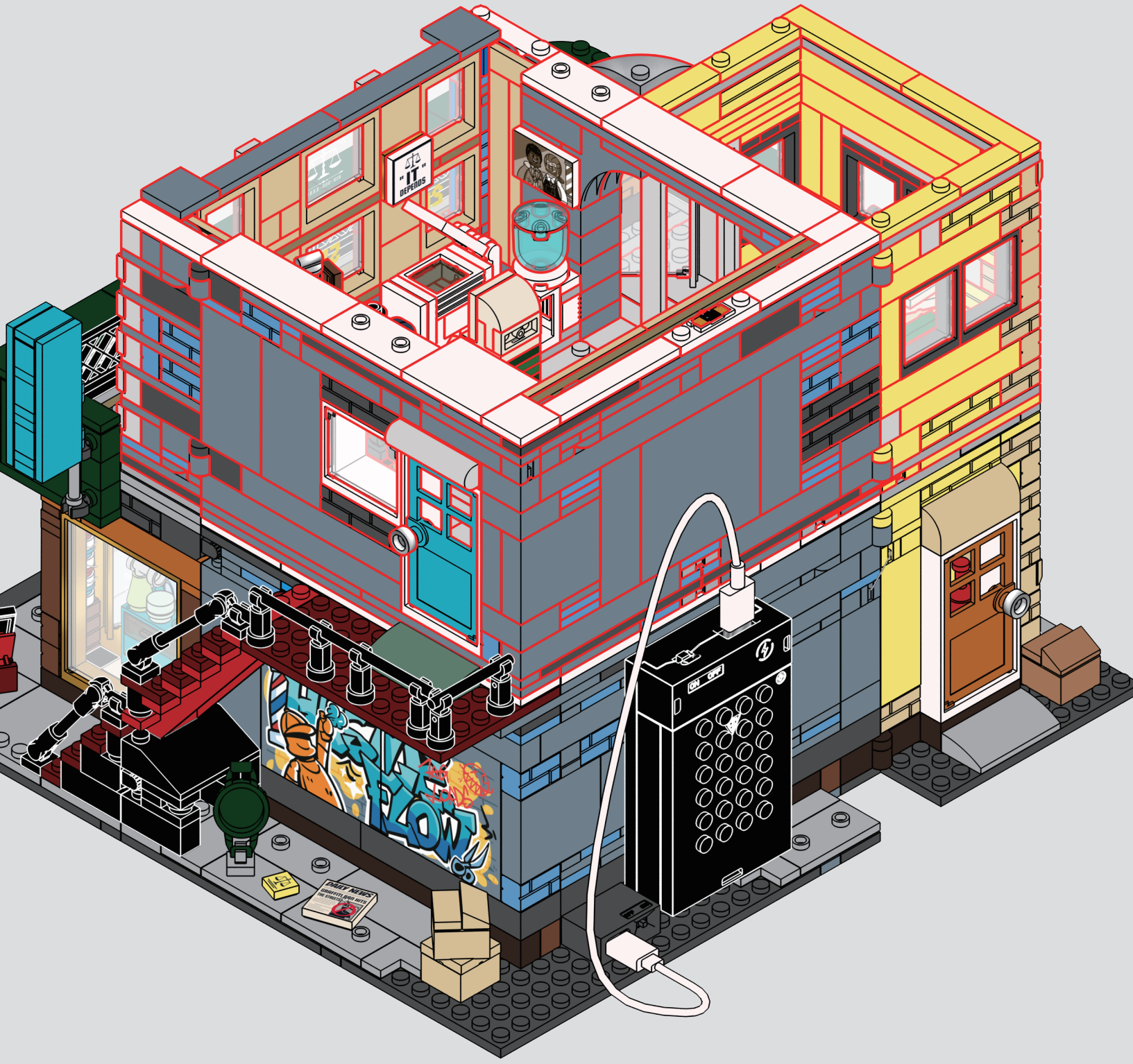

美式街头系列

感谢您对本系列产品的喜爱与支持，如您在拼搭过程中遇到任何问题，均可通过微信扫描二维码联系企微客服寻求协助。
如果您还有其他意见或者建议，也请务必通过企微客服告知我们，期待与您的再次相遇！

企微客服

STREET FUSION

We would like your opinion on the new product you have just purchased. Your feedback will help shape the future development of this product series.
Please visit: https://www.lumibricks.com/pages/feedback
We sincerely hope you enjoy the product and we can't wait to see you again soon.Please let us know if we can do anything else to help!



Lumibricks and Lumibricks logo are trademarks of the Lumibricks group.

WWW.LUMIBRICKS.COM

如果您遇到任何问题，请通过以下方式与我们联系：

天猫 小红书

lumibricks灯搭官方旗舰店

会员中心