LUMIBRICKS™

19012
2557PCS
16+



MULTI-FORM MODULAR BUILDING

Y'ALL NEXT!
BEARD BOB'S
BARBER
RUNNIN' THE CHAIR SINCE '79

Book Cuts

212
555
XXXX

BARBER

SHAVE & GROOMING
HOT SHAVE | BEARD TRIM | RAZOR CUT

BEARD BOB'S BARBER
NO.012 FADE | LINE-UP | BRAIDS | LOCS 718-555-XXX

FOR RENT

OPEN

PRICE LIST
FADE $40
LINEUP $20
BEARD $20
BRAIDS $60
LOCS $70

3

Scan the QR code
for a PDF instruction

扫码关注公众号
获取电子版说明书

Barbershop
Street Fusion

ABOUT LUMIBRICKS

Welcome to Lumibricks, where imagination meets illumination in the brick world!

Formerly known as FUNWHOLE, the world's first lighting bricks manufacturer, Lumibricks continues its legacy as a trailblazer in the world of building brick sets with a unique twist - integrated lighting that transforms every creation into a radiant masterpiece.

Every Lumibricks' set celebrates the joy of building and the magic of illumination. Whether you're crafting intricate architectures or imaginative scenes, the design details and lighting features bring the sets to life, and also bring you joy and shine whether it is the day or night.

At Lumibricks, we believe in the power of light to transform and elevate. With our slogan, "Delight day and night," we invite you to explore the possibilities of illuminated brick sets. Discover a hobby that doesn't just shine - it glows with your inner creativity.

欢迎来到Lumibricks灯搭的乐园

在这里，我们不仅仅是玩具制造商，我们还是创造快乐的艺术家。

自2014年诞生起，Lumibricks灯搭（原FUNWHOLE）就坚守一个独特的愿景：在日与夜的交替中，为我们的玩家揭示积木之美的无限可能。

作为全球领先的灯光积木品牌，本着充分表现积木套装整体之美的初衷，Lumibricks致力于灯光积木套装产品的开发，将积木与灯光合为一体。

Lumibricks不仅仅是一套普通的积木，更是代表了一种全新的玩乐方式，每一块积木，每一束光线，都承载着我们带给全球数百万家庭更多欢笑的承诺。

我们相信，积木有灯，生活有光，让Lumibricks与你一起，拼搭出更多乐趣，创造属于你的灯光宇宙。


11
F
LUMIBRICKS
03

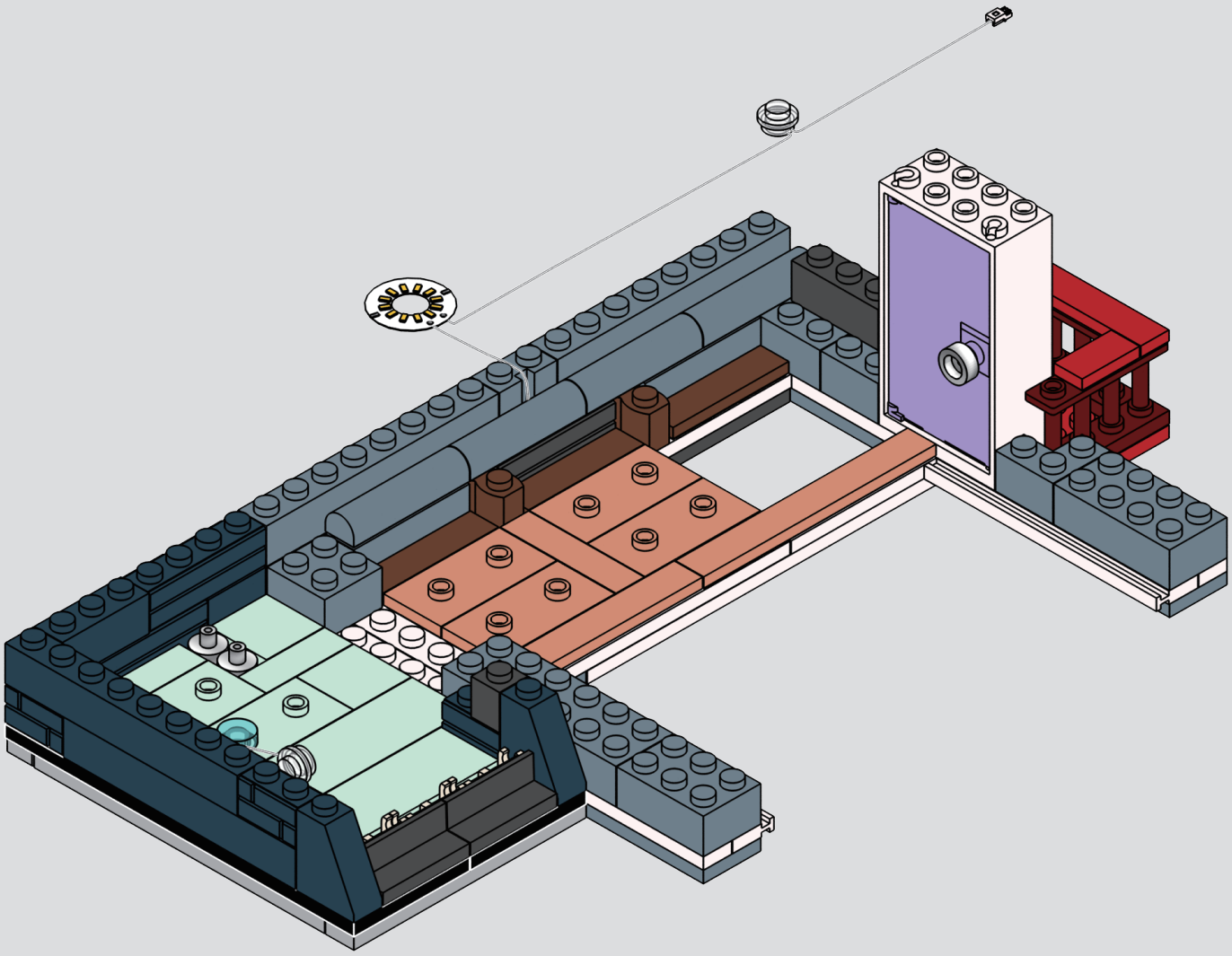

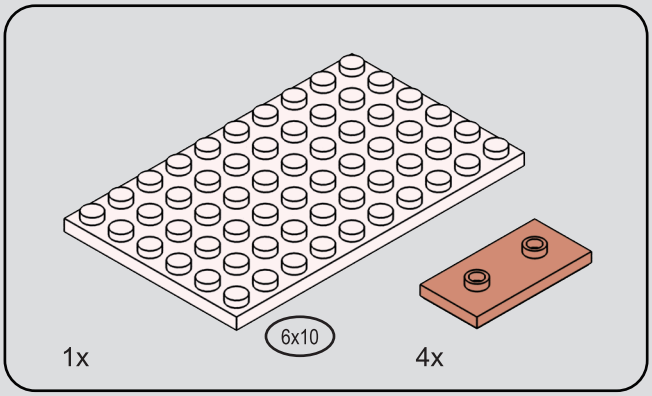

1

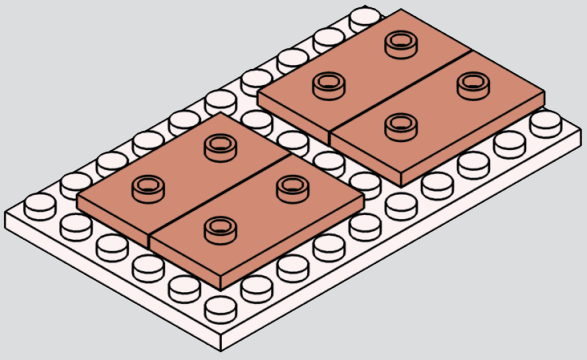

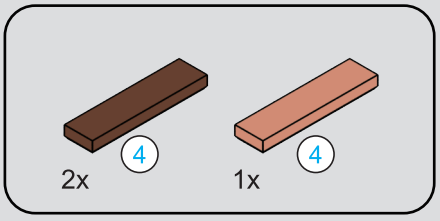

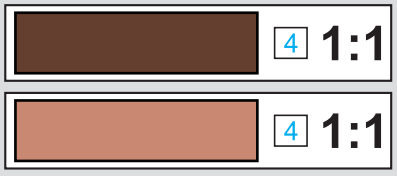

2

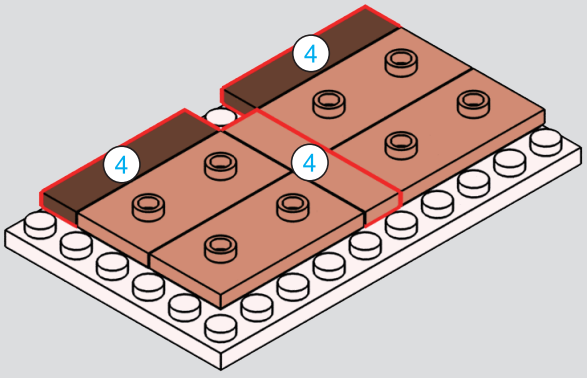

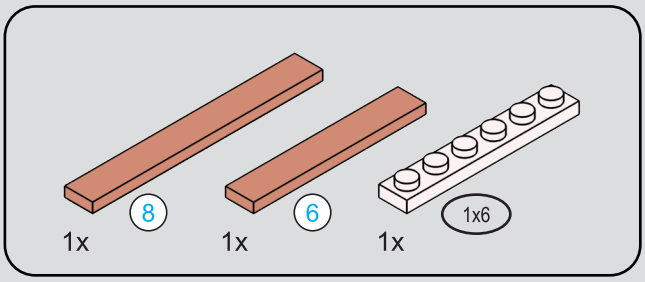

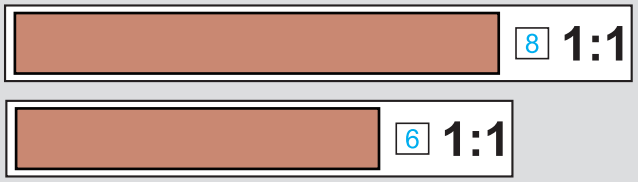

3

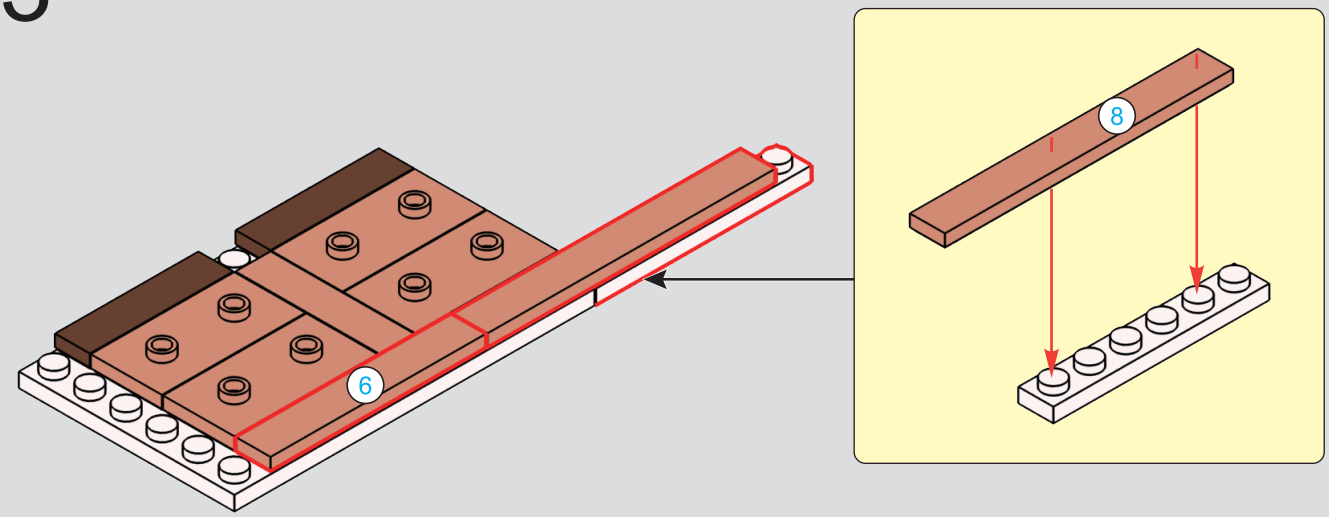

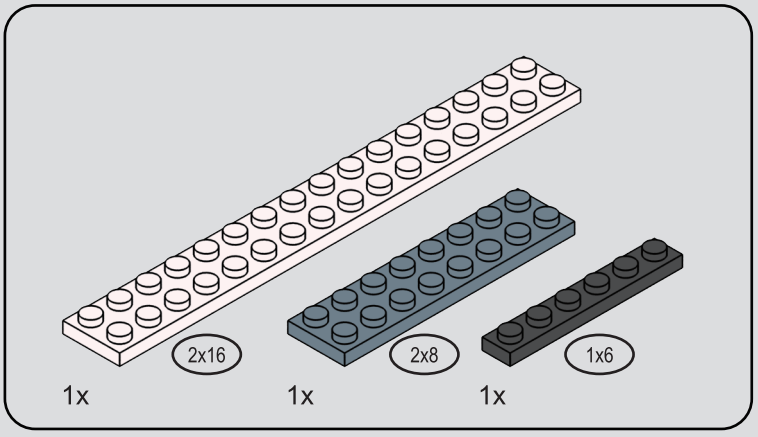

4

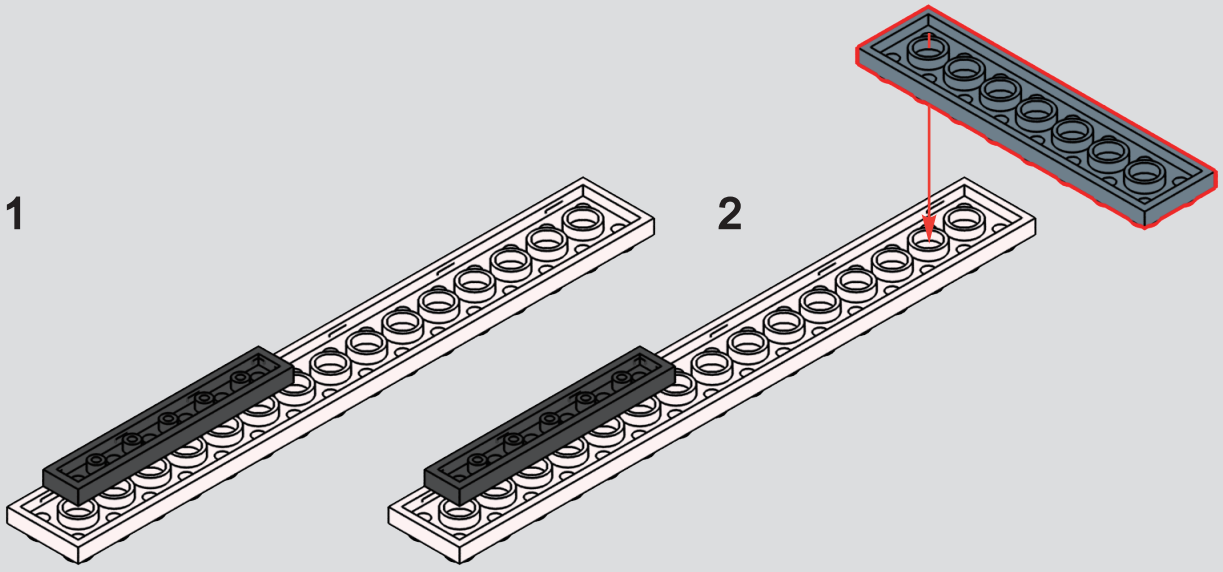

5

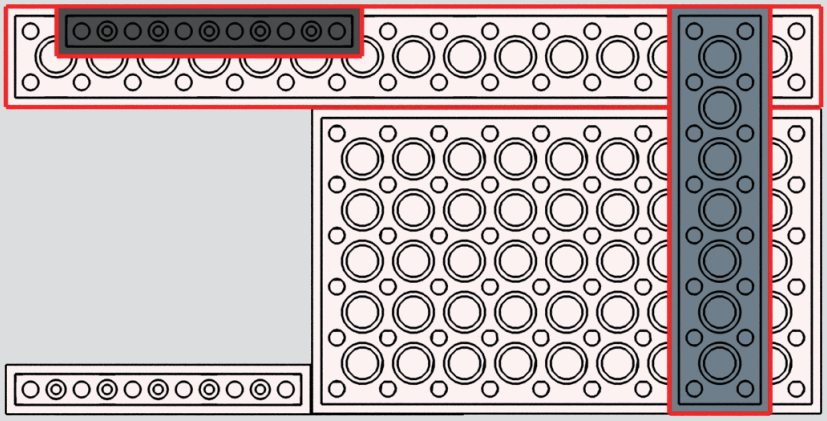

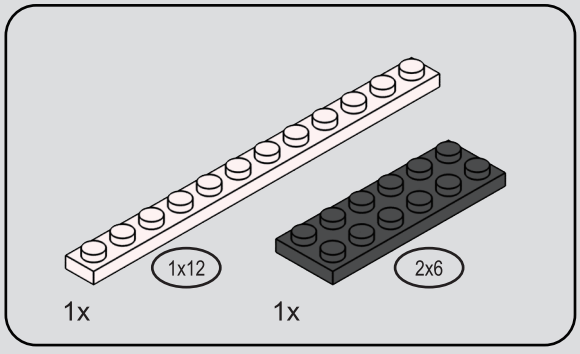

6

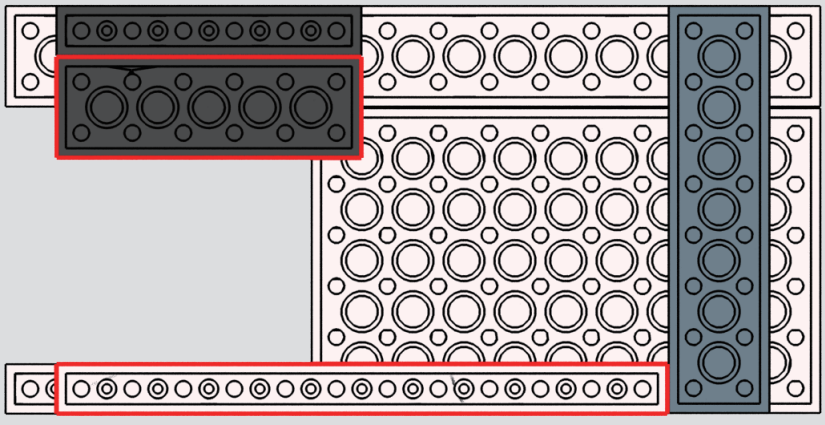

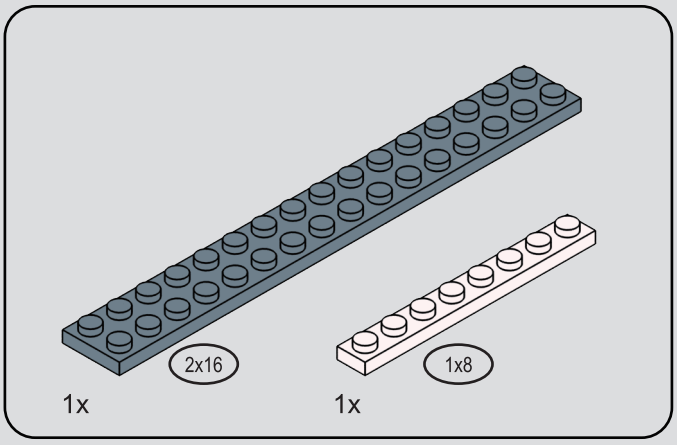

7

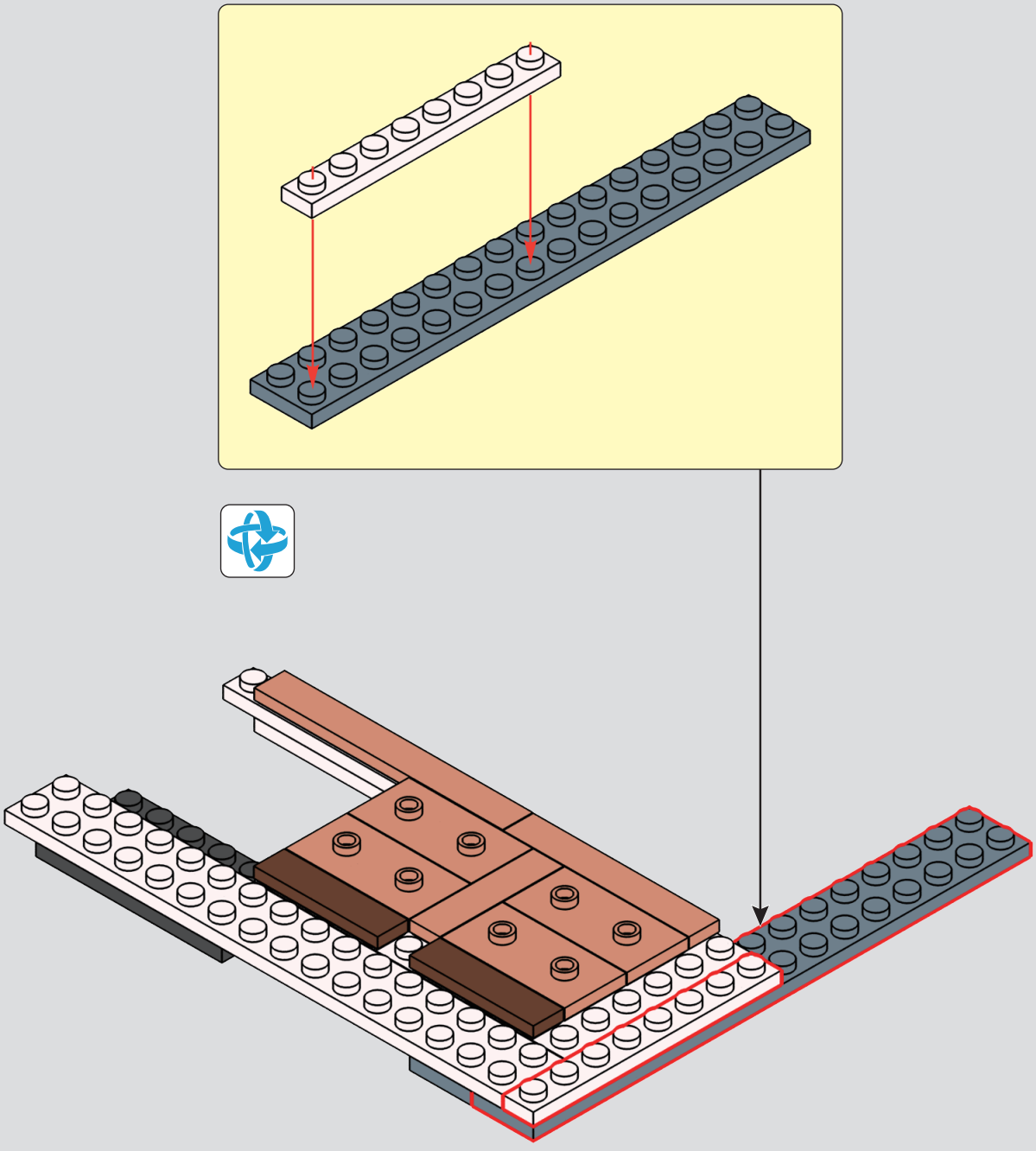

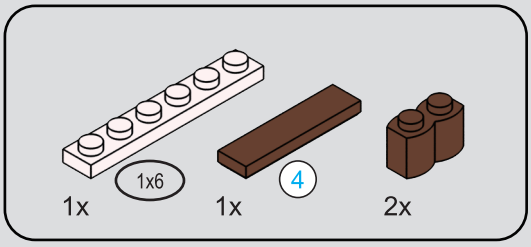



8

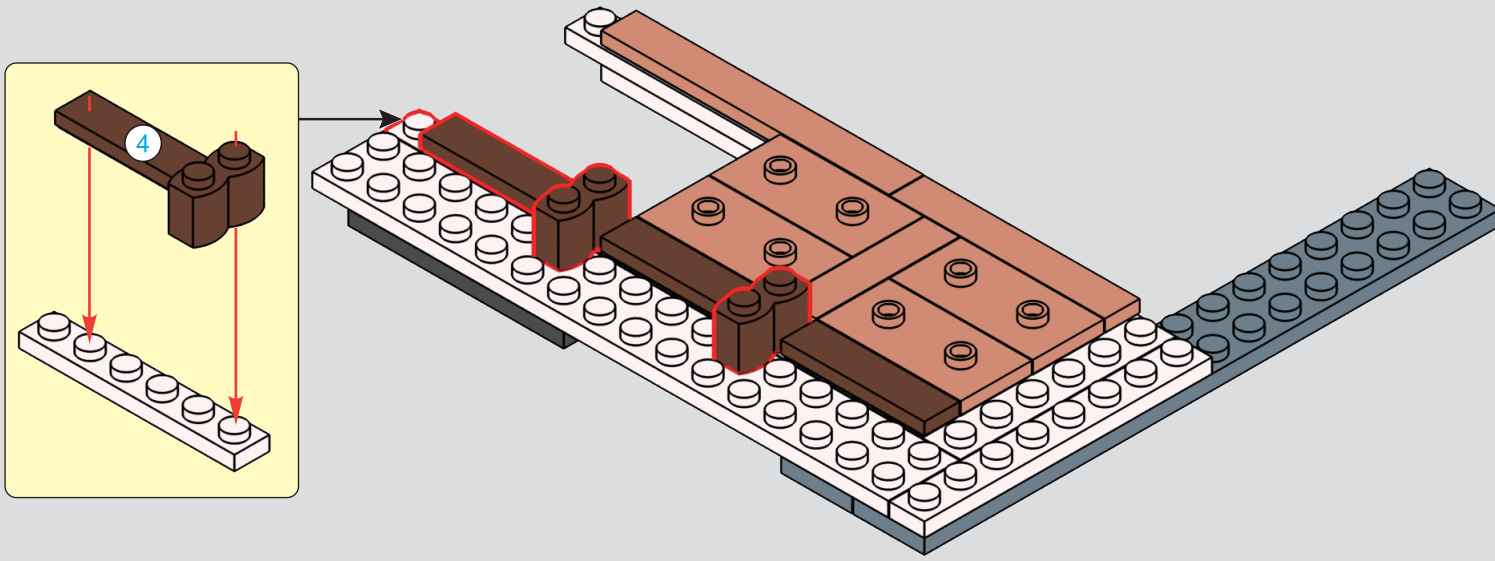

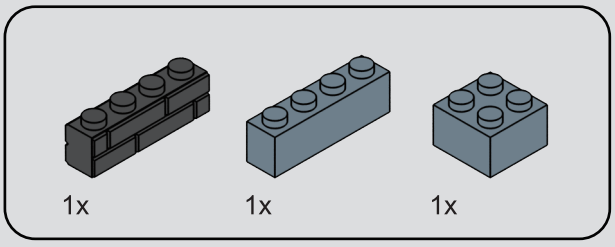

9

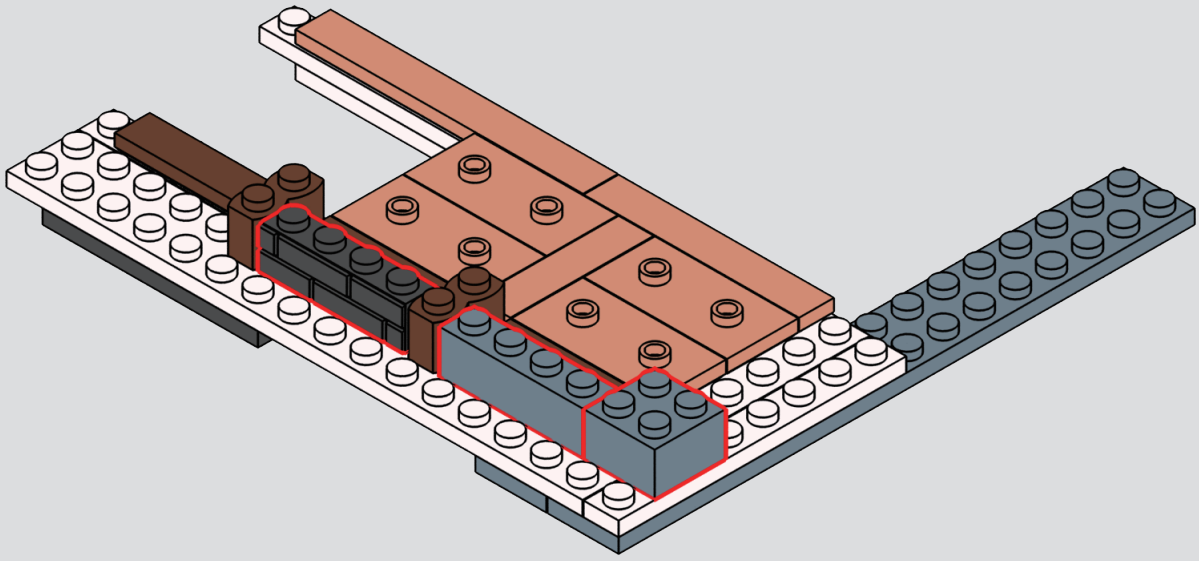

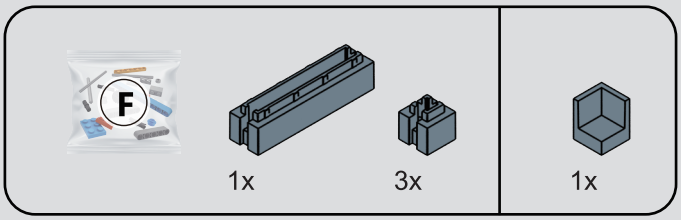

10

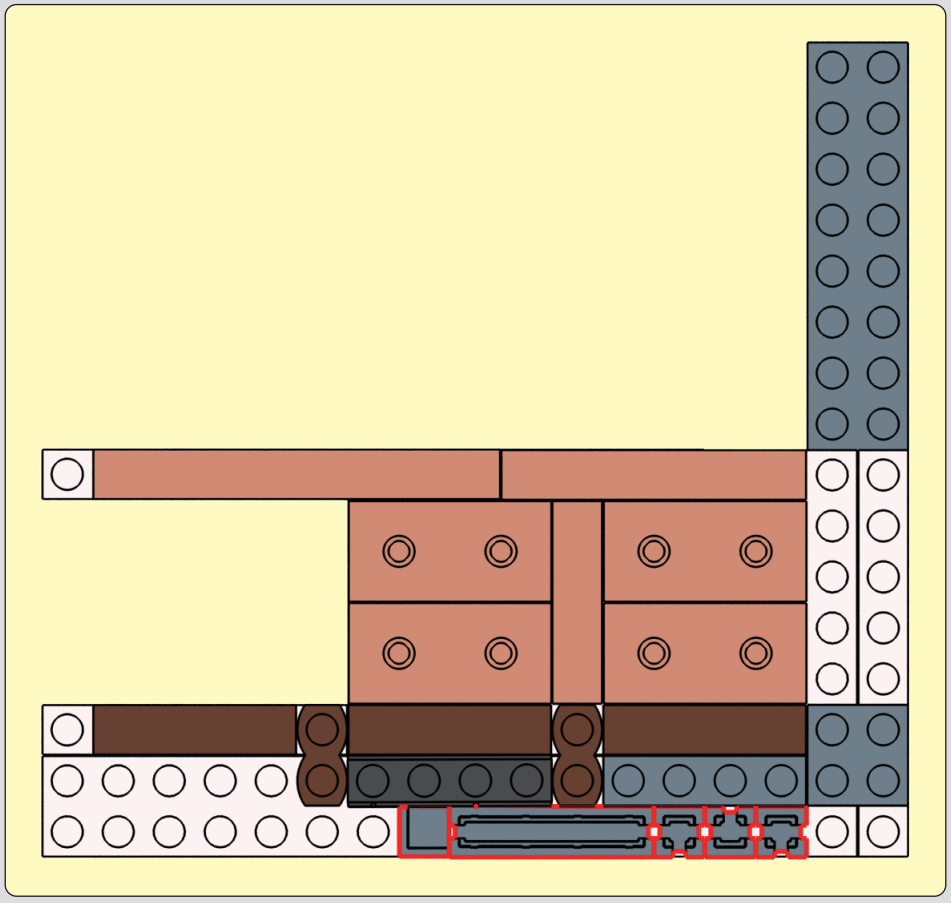

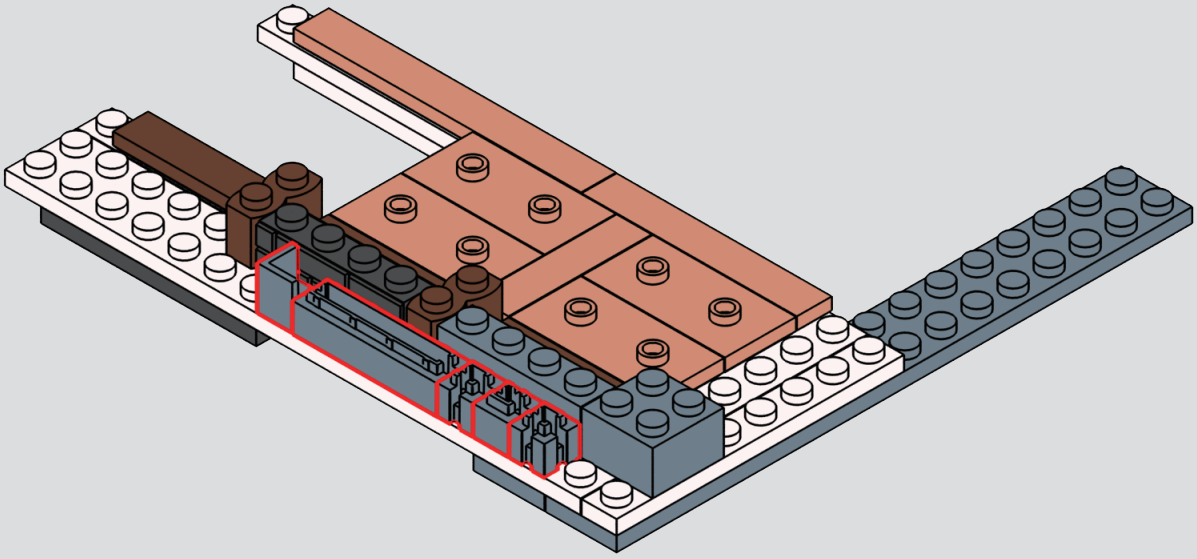

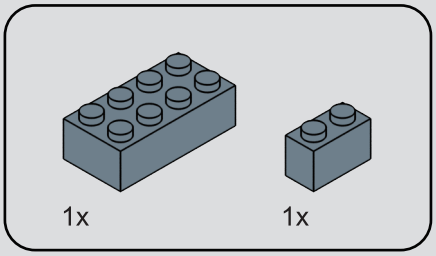

11

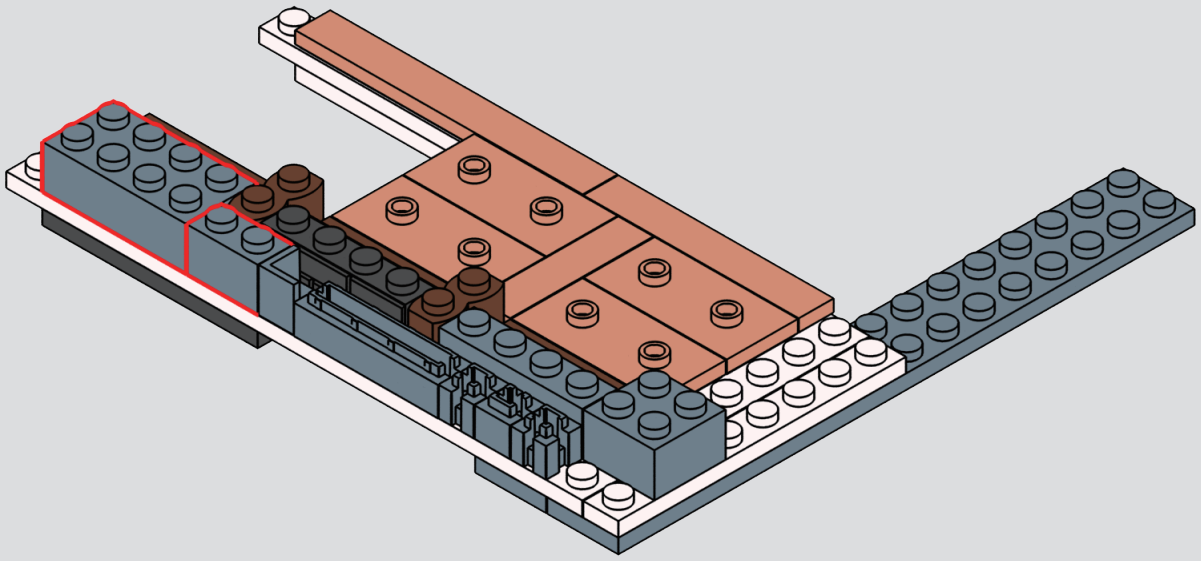

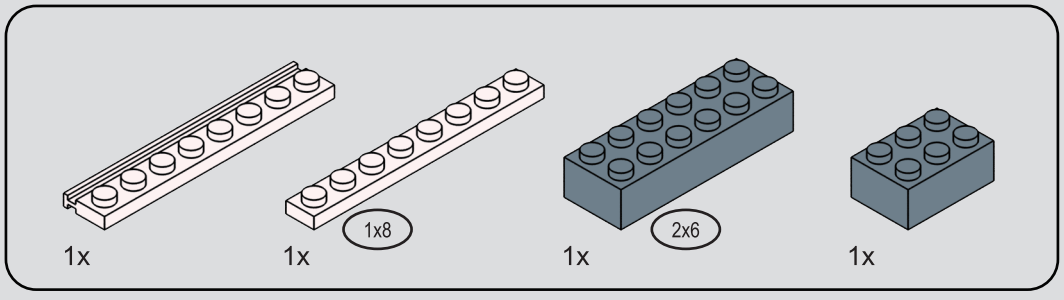

12

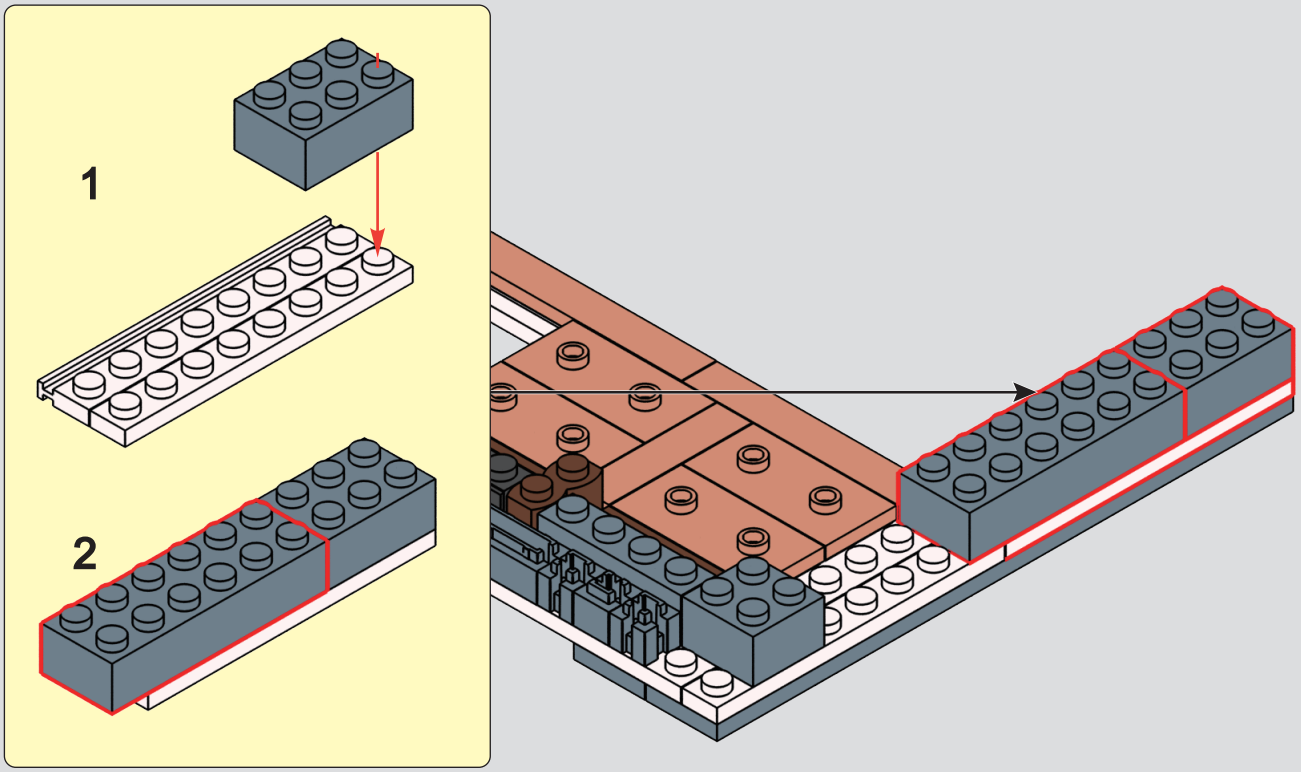

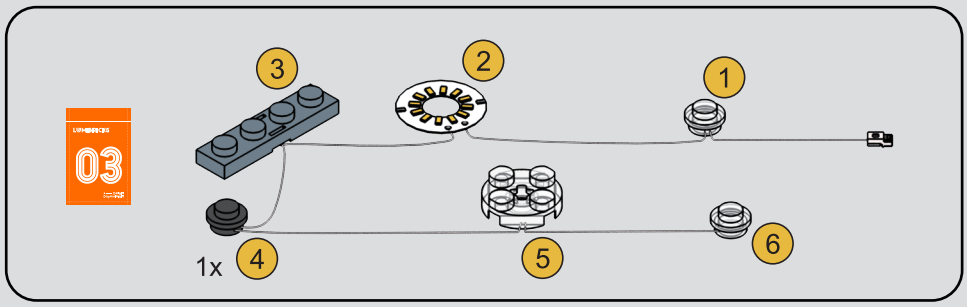

13

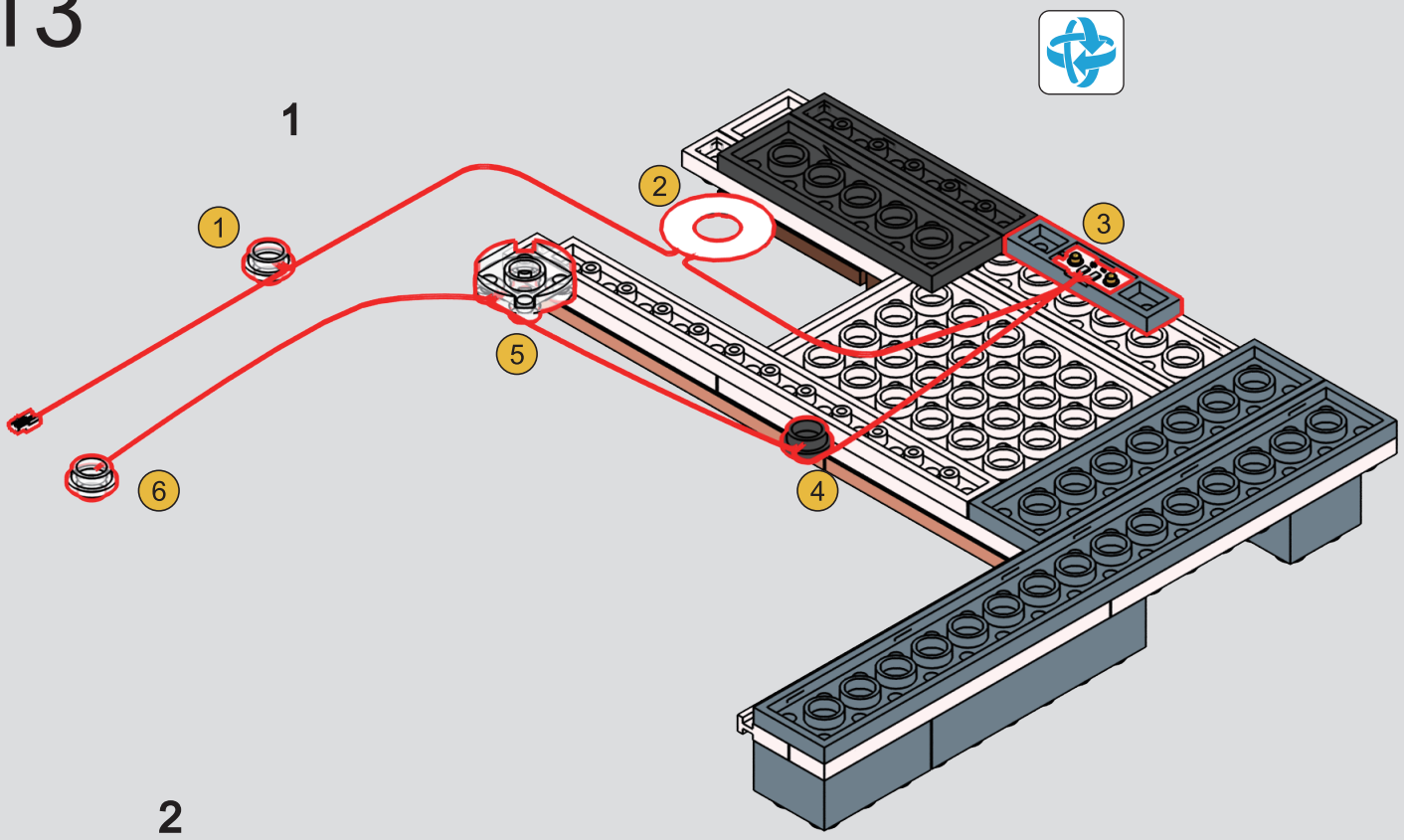

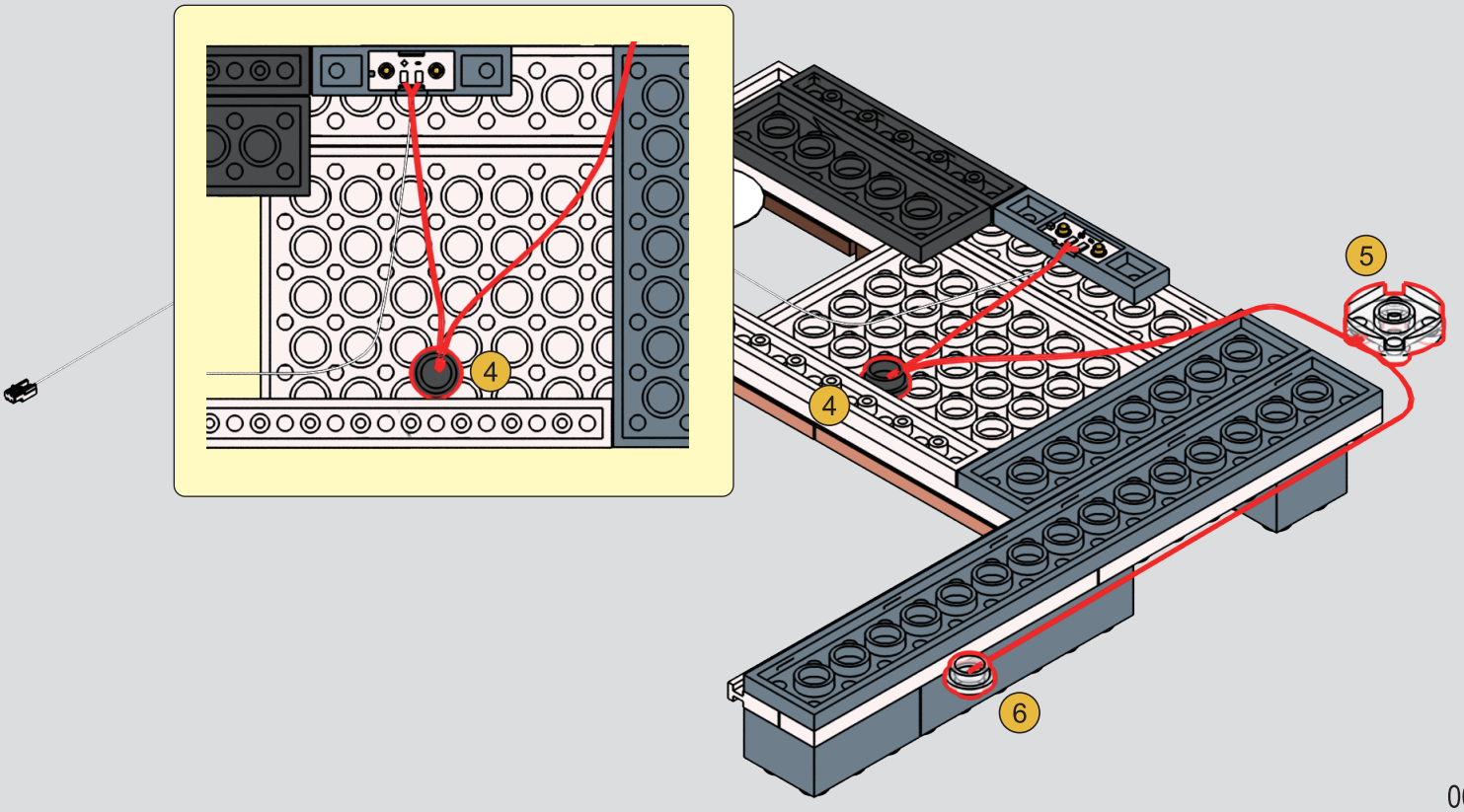

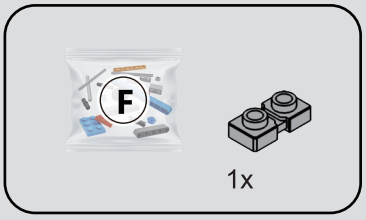

14

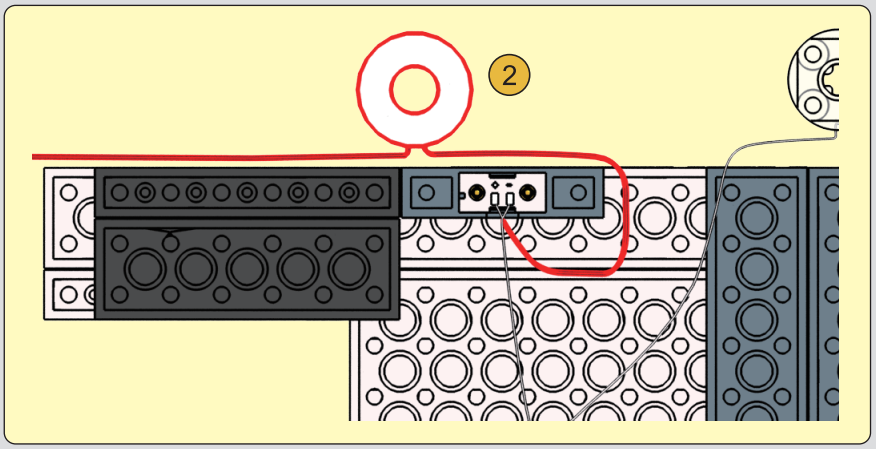

1

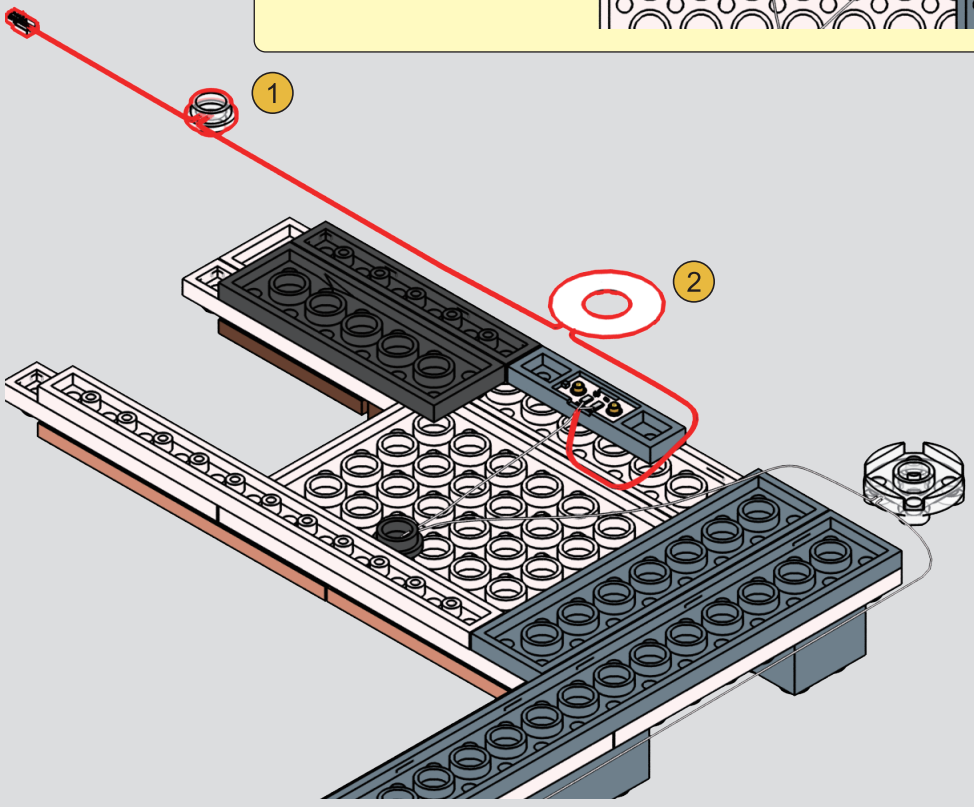

2

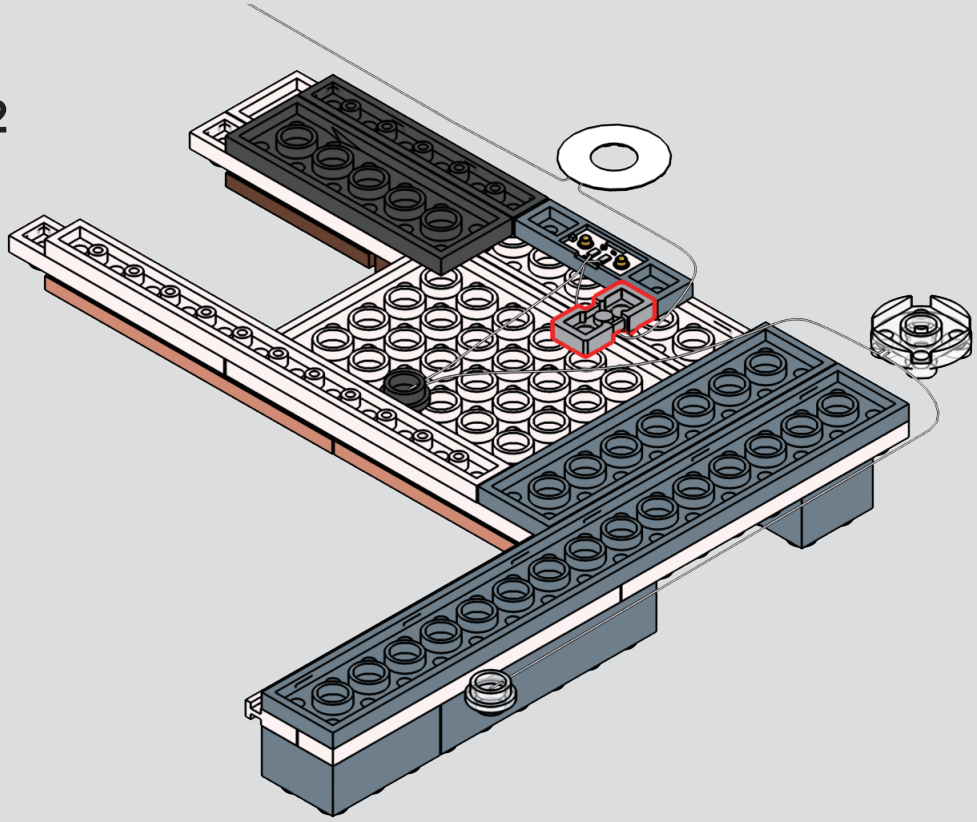

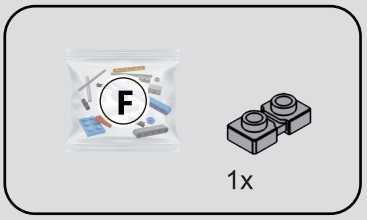

15

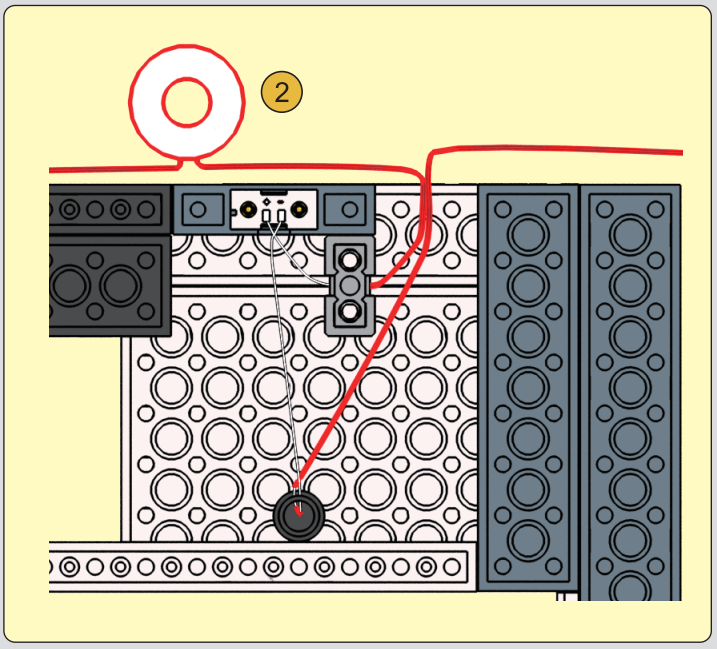

1

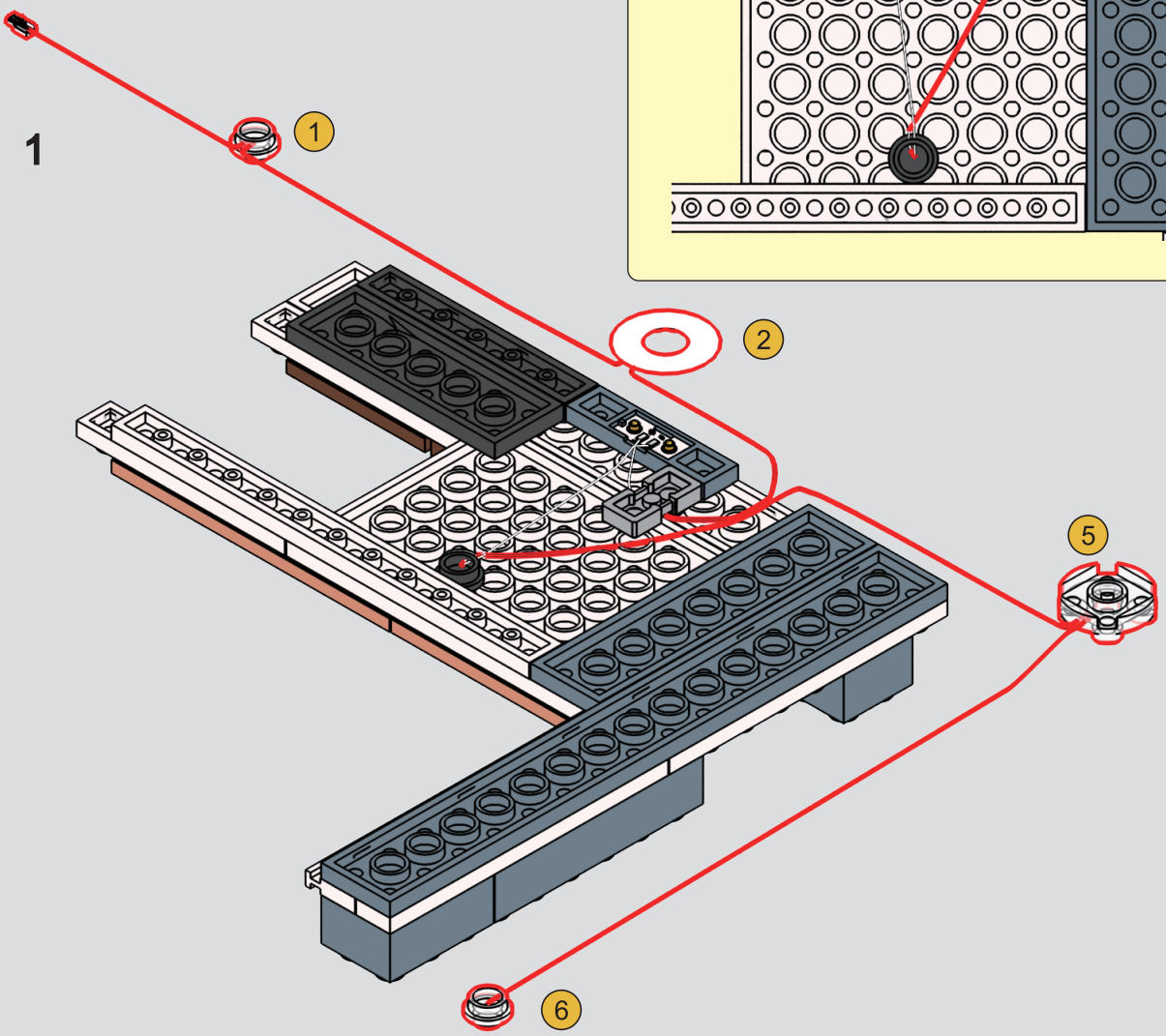

2

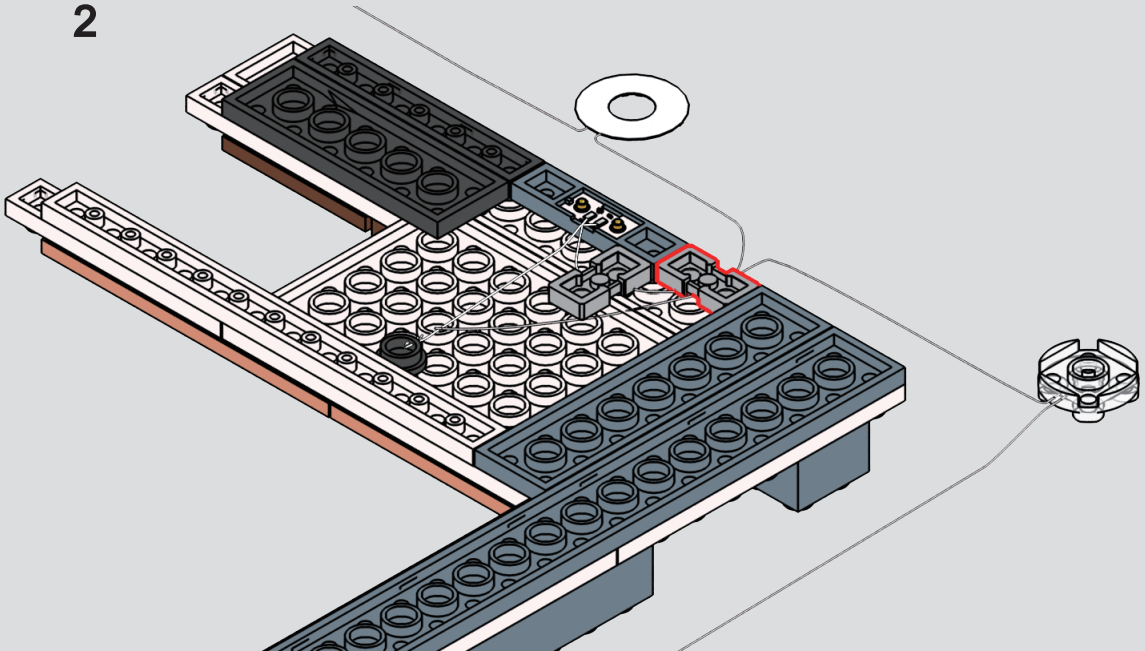

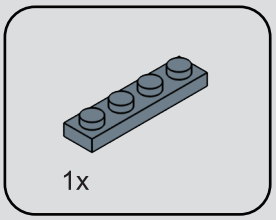

16

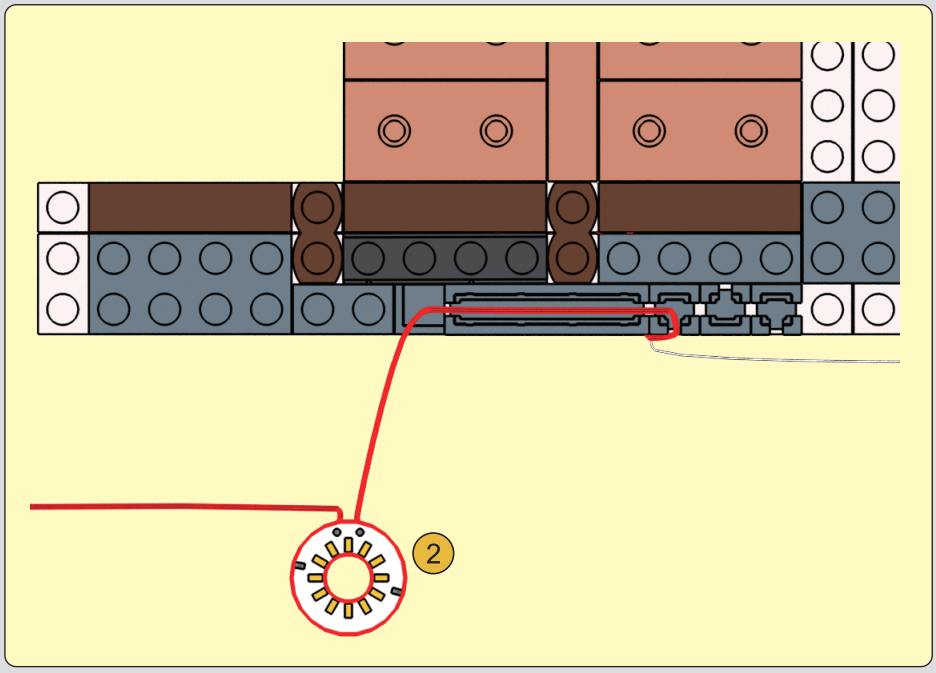

1

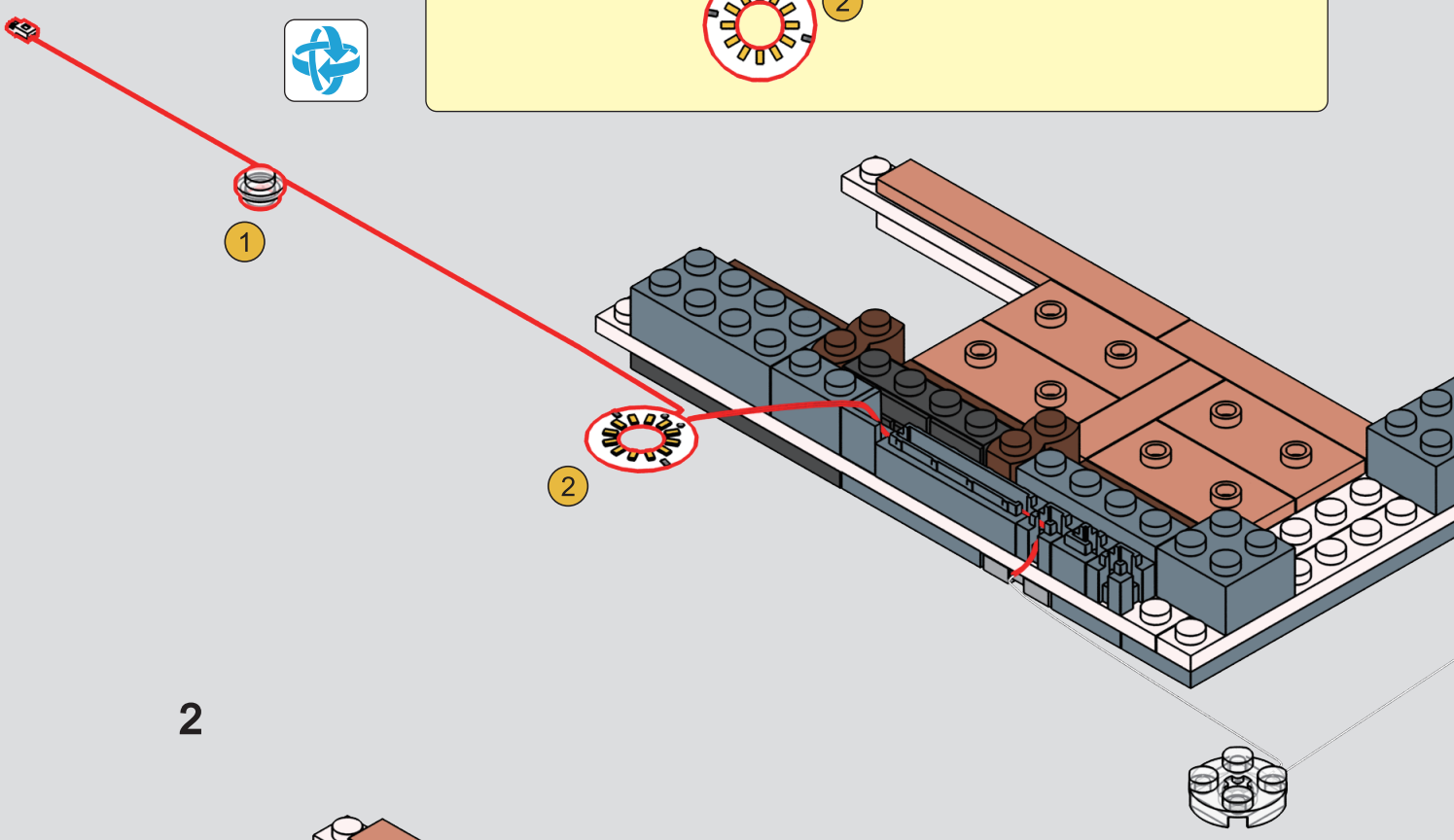

2

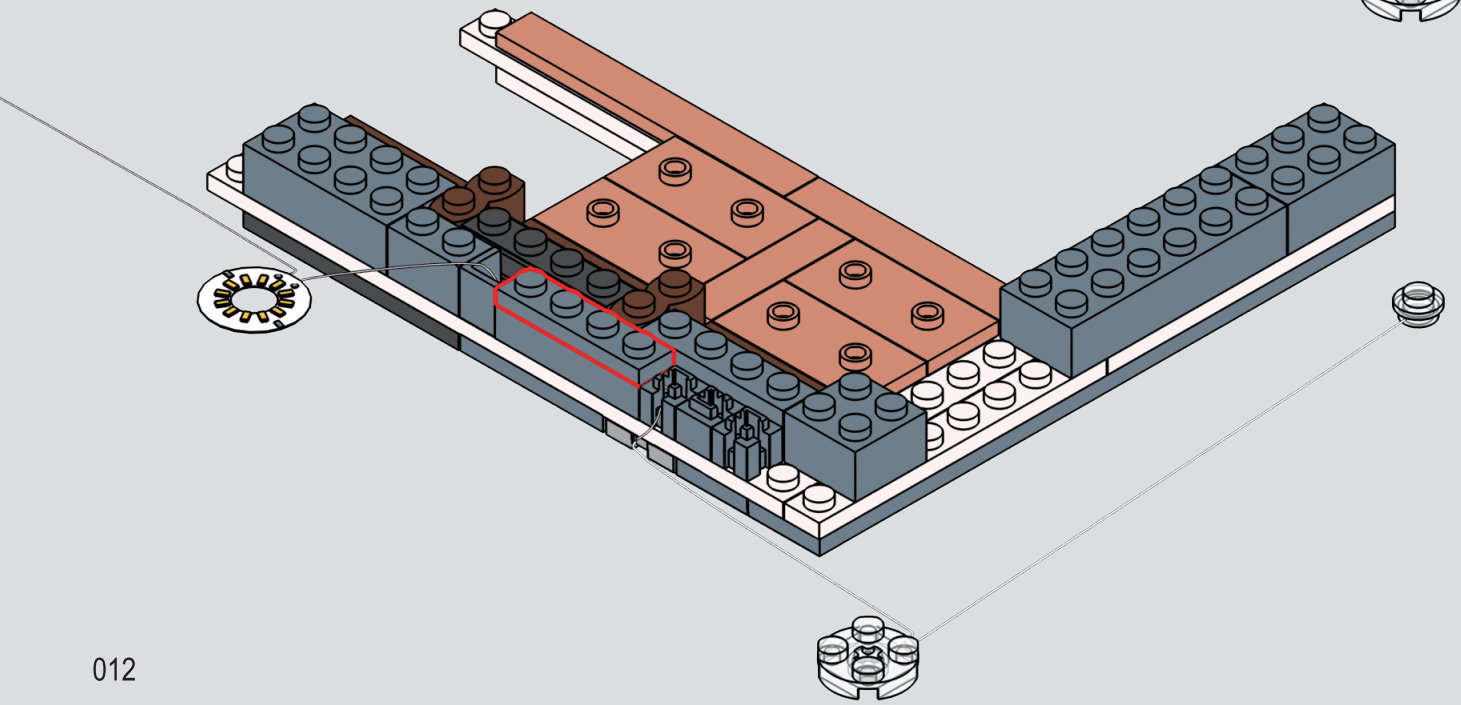

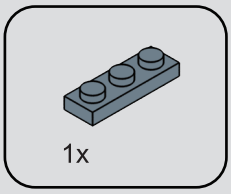

17

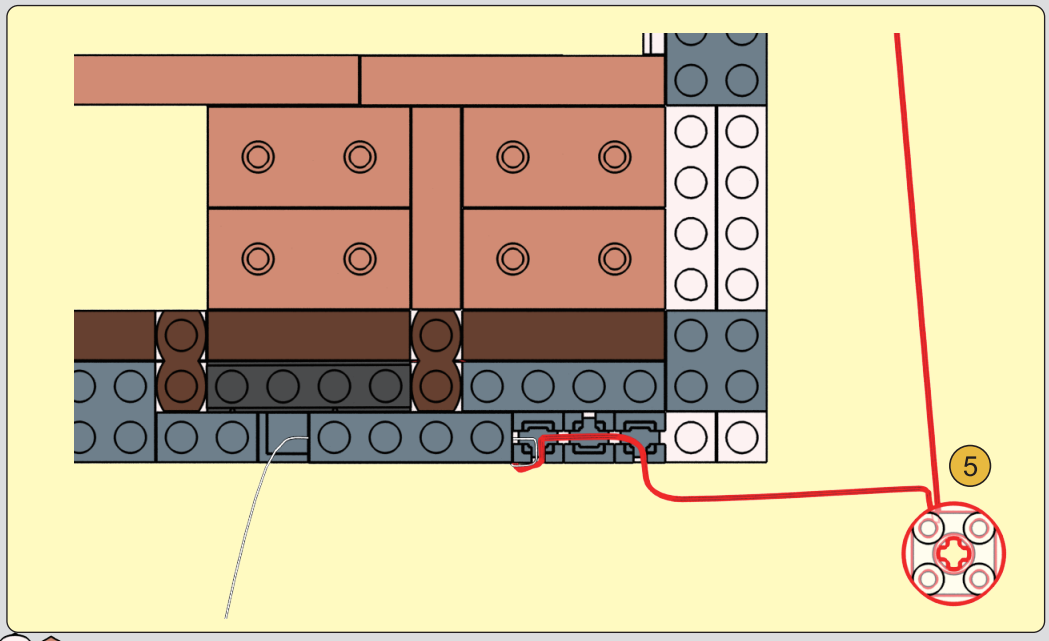

1

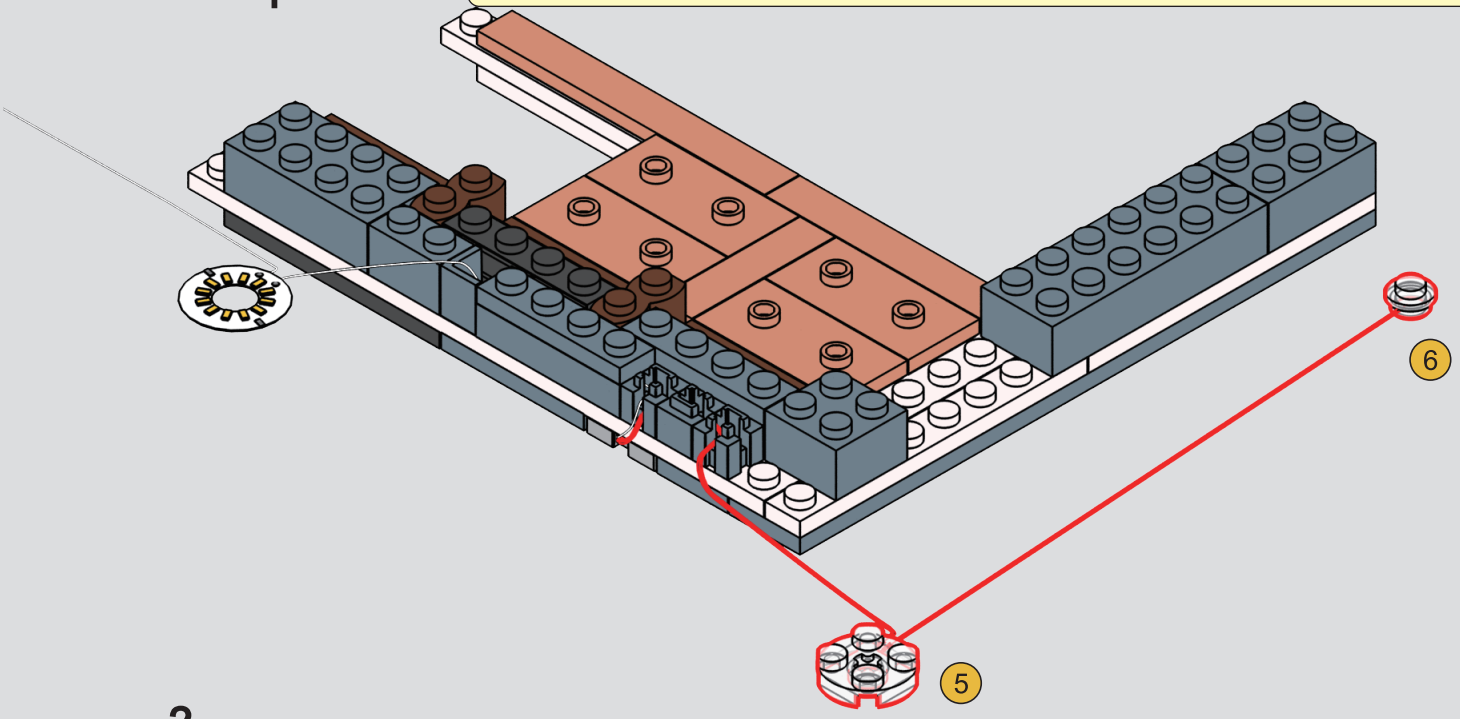

2

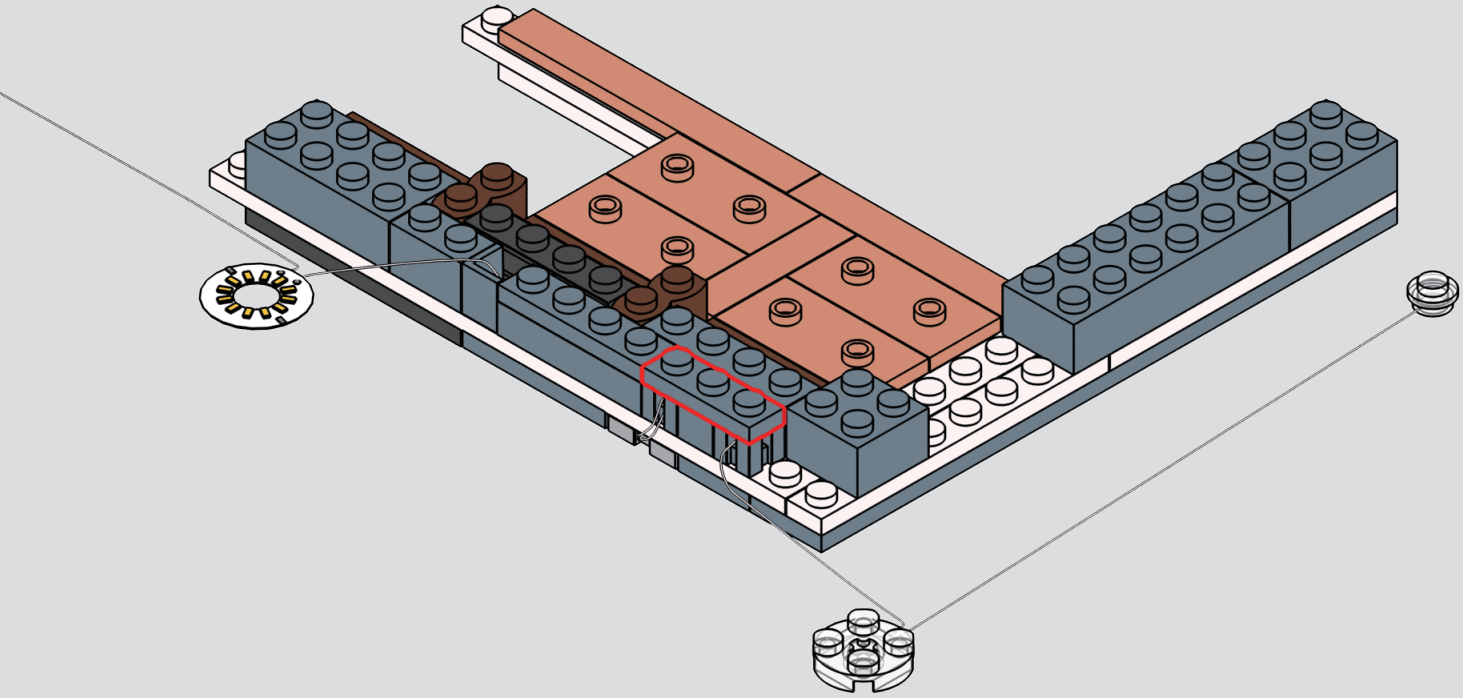

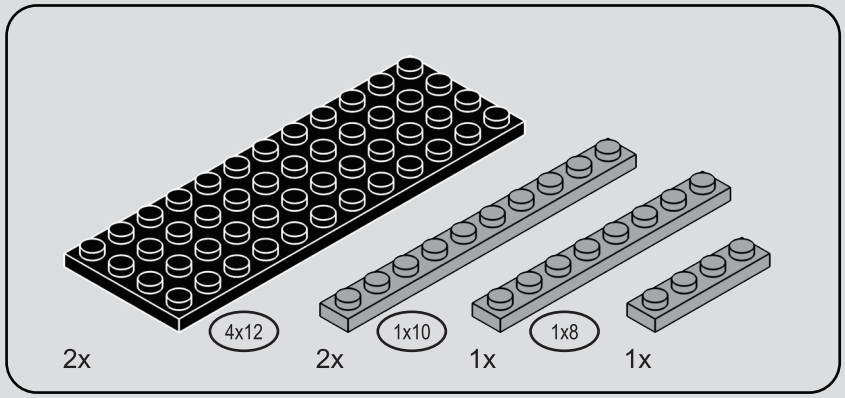

18

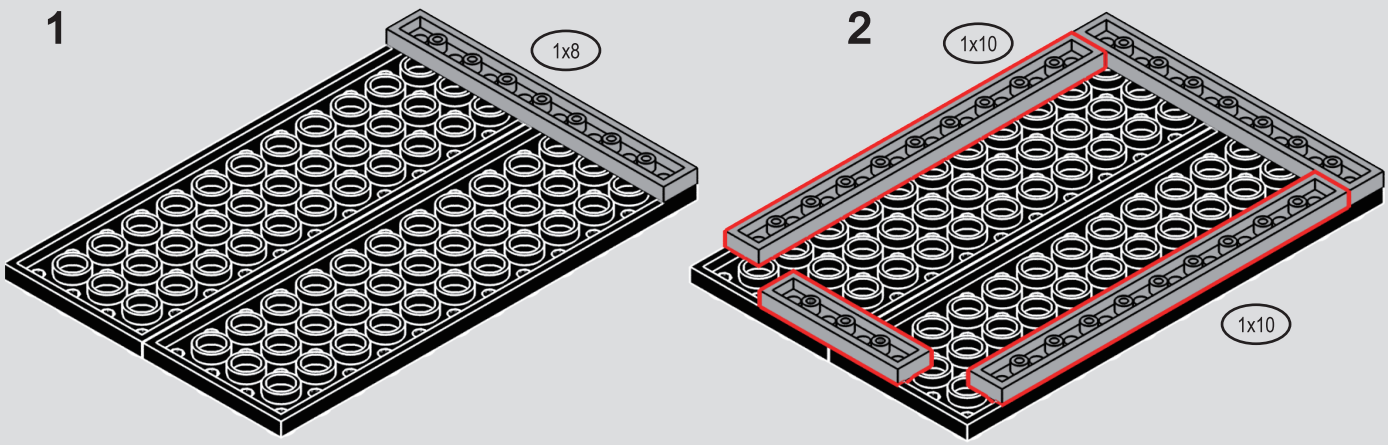

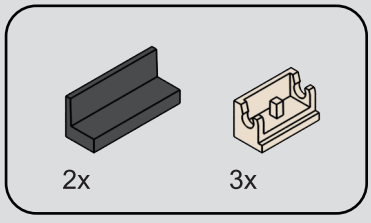

19

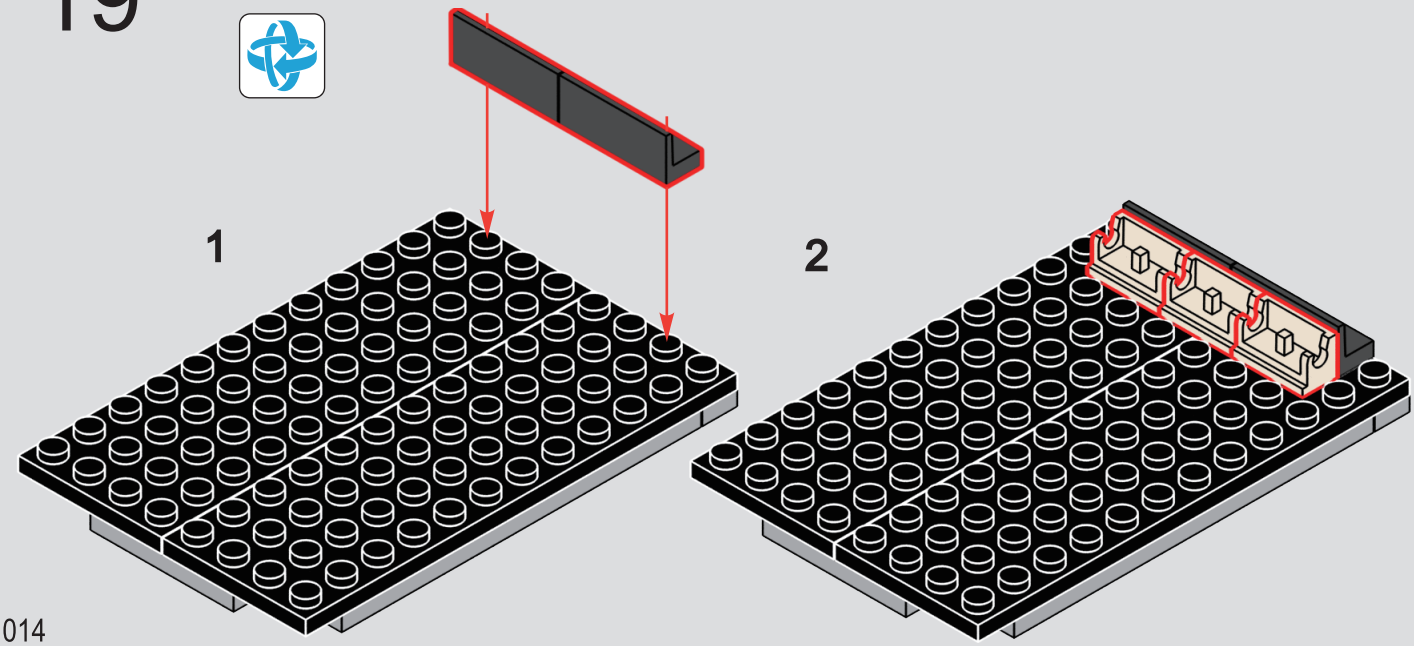

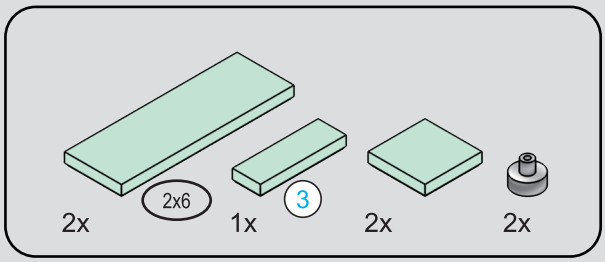

20

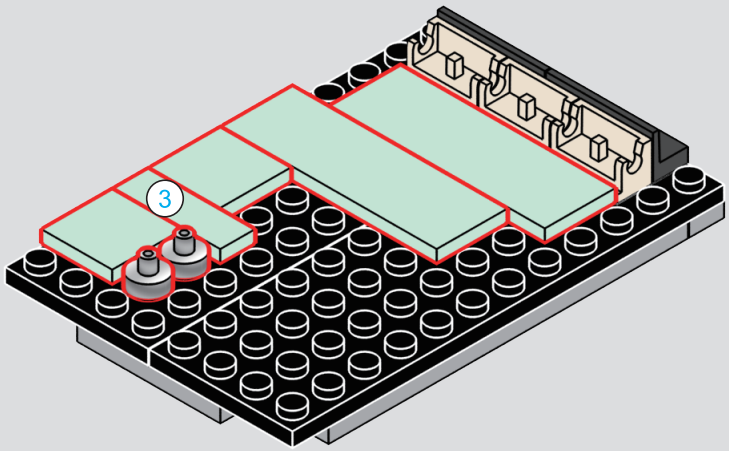

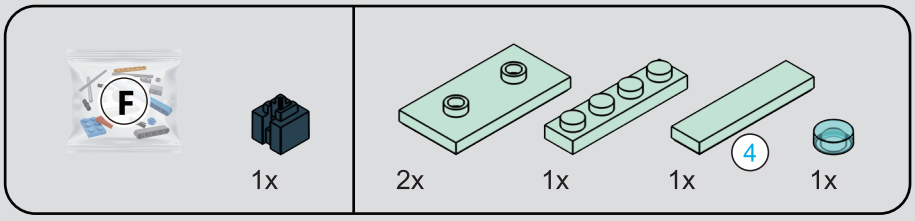

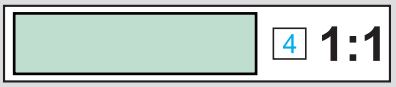

21

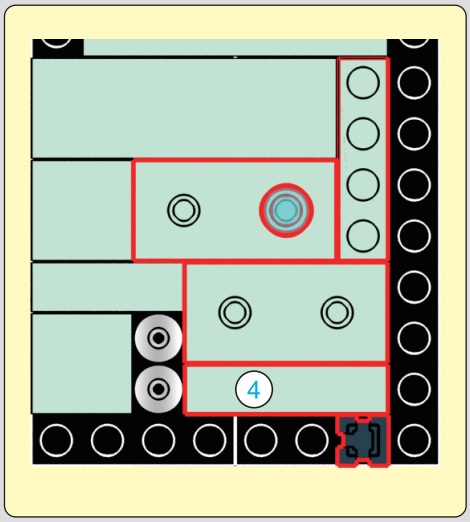

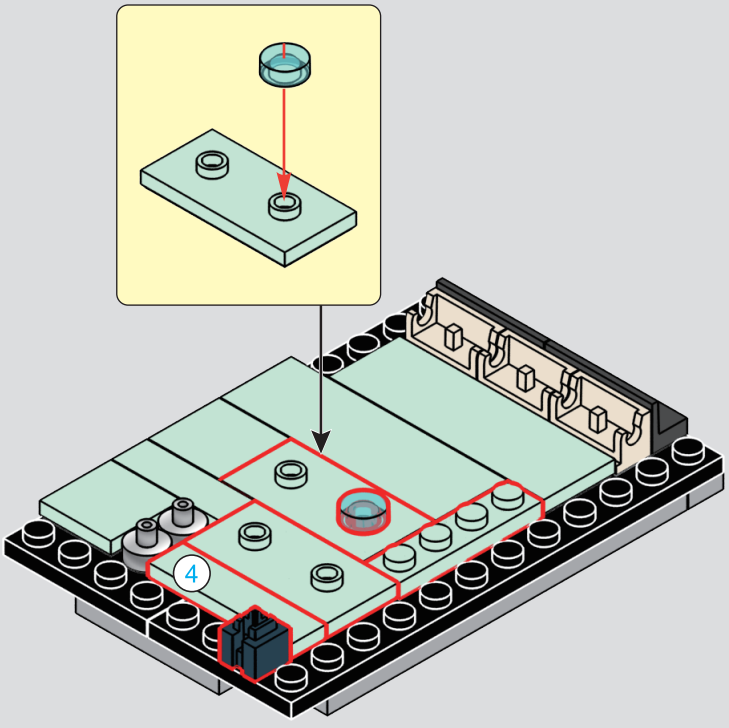

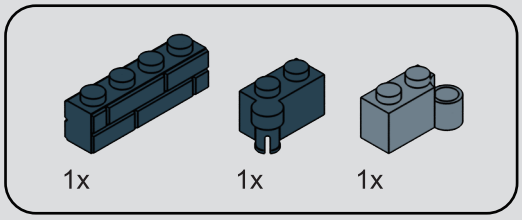

22

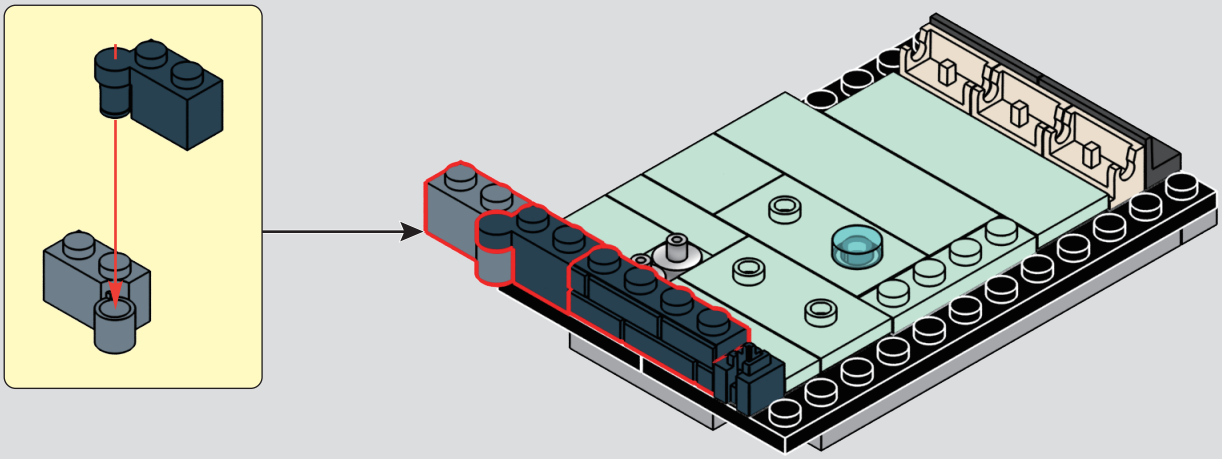

23

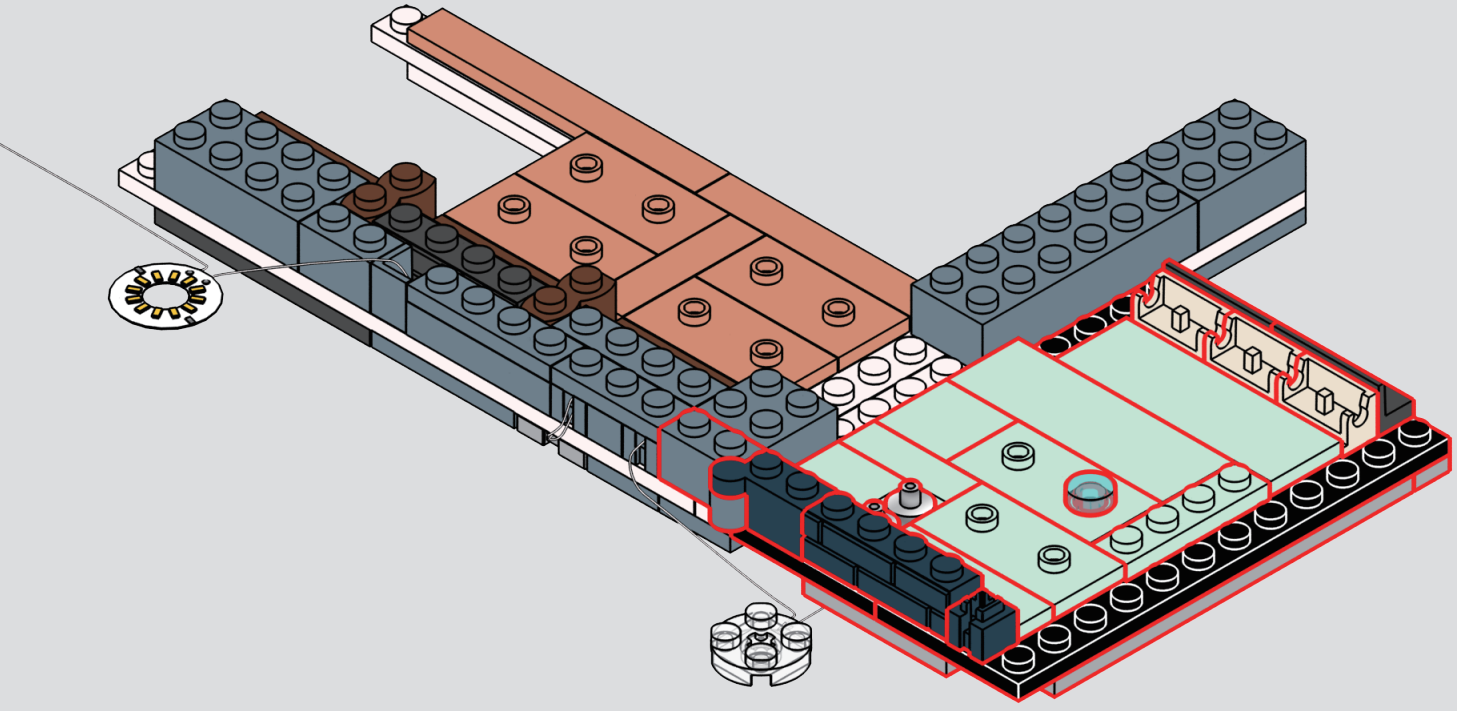

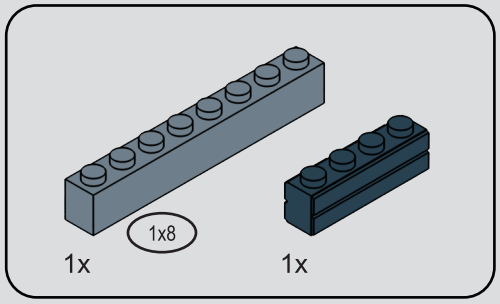

24

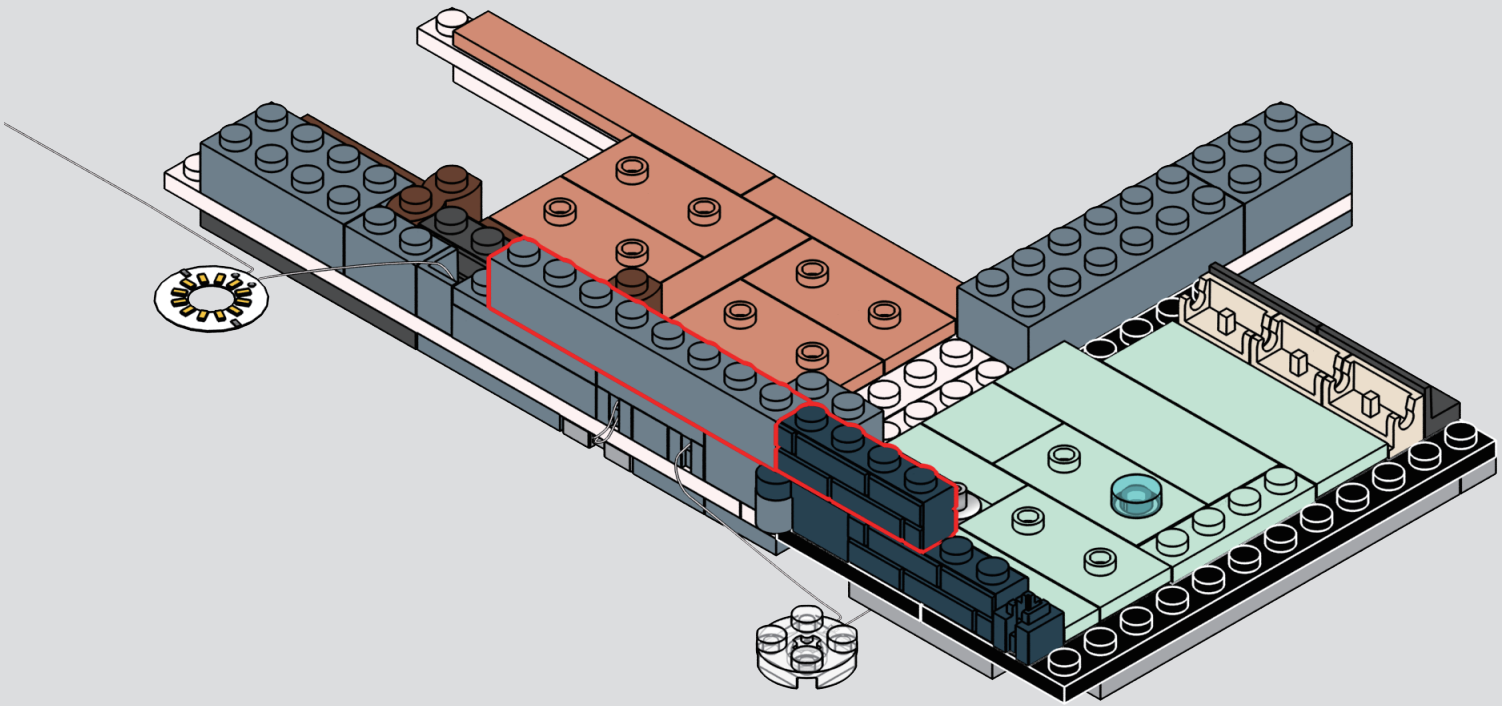

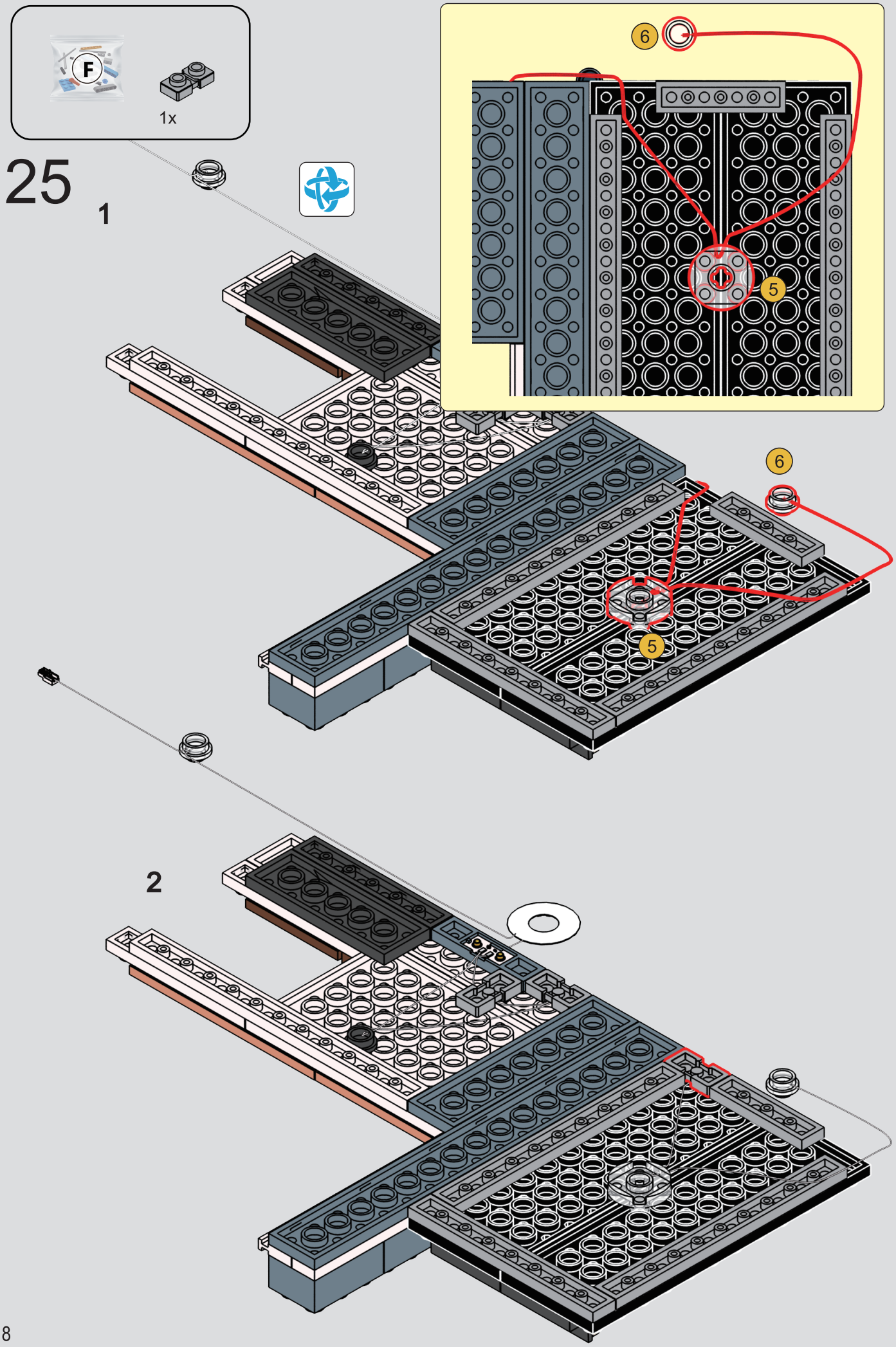
F
1x
25
1
6
5
6
5
2

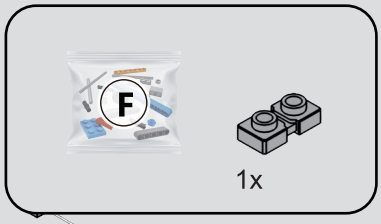

26

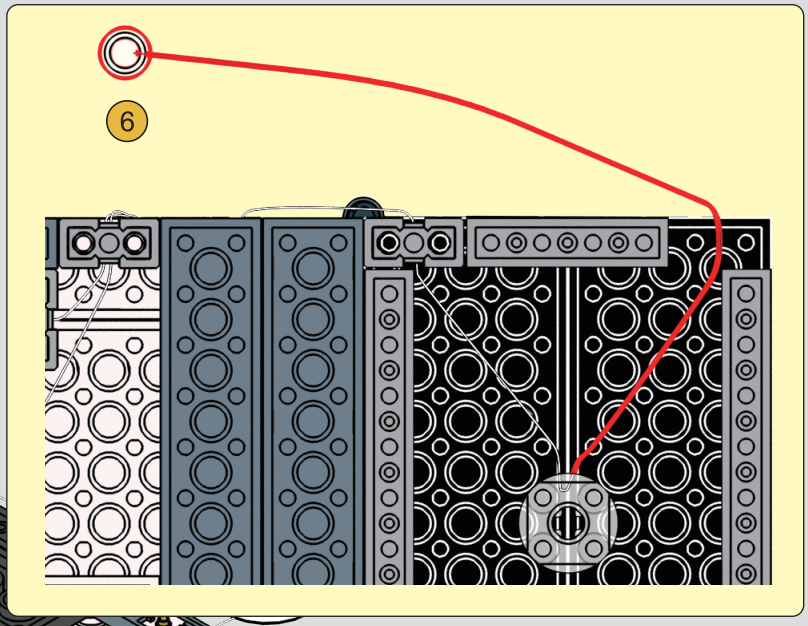

1

2

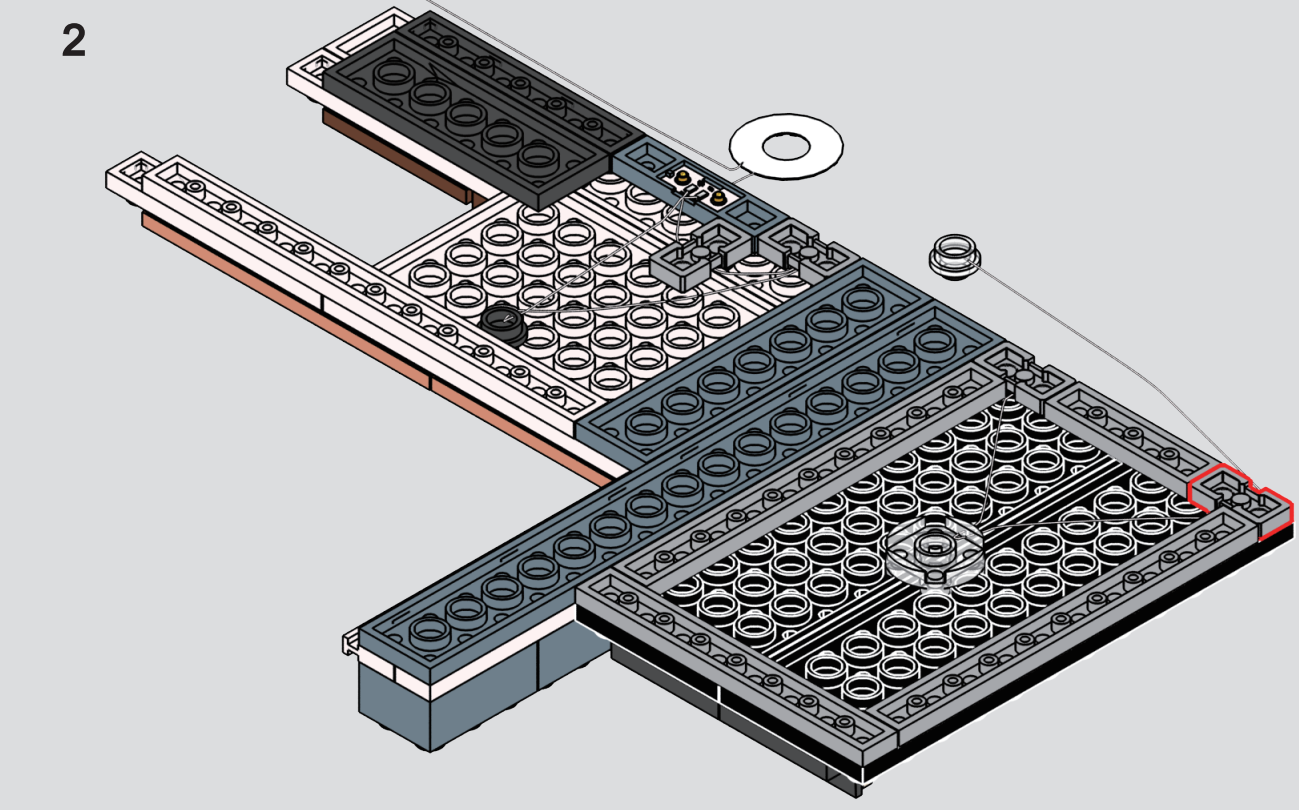

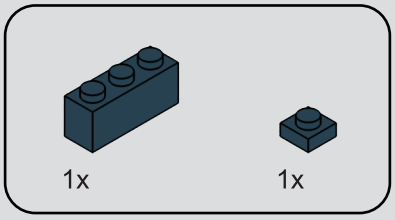

27

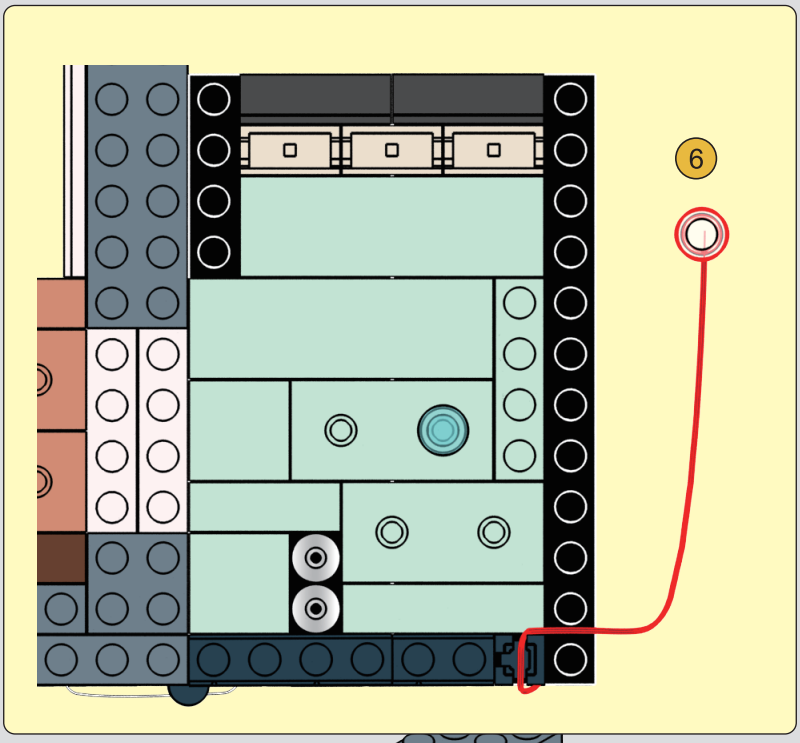

1

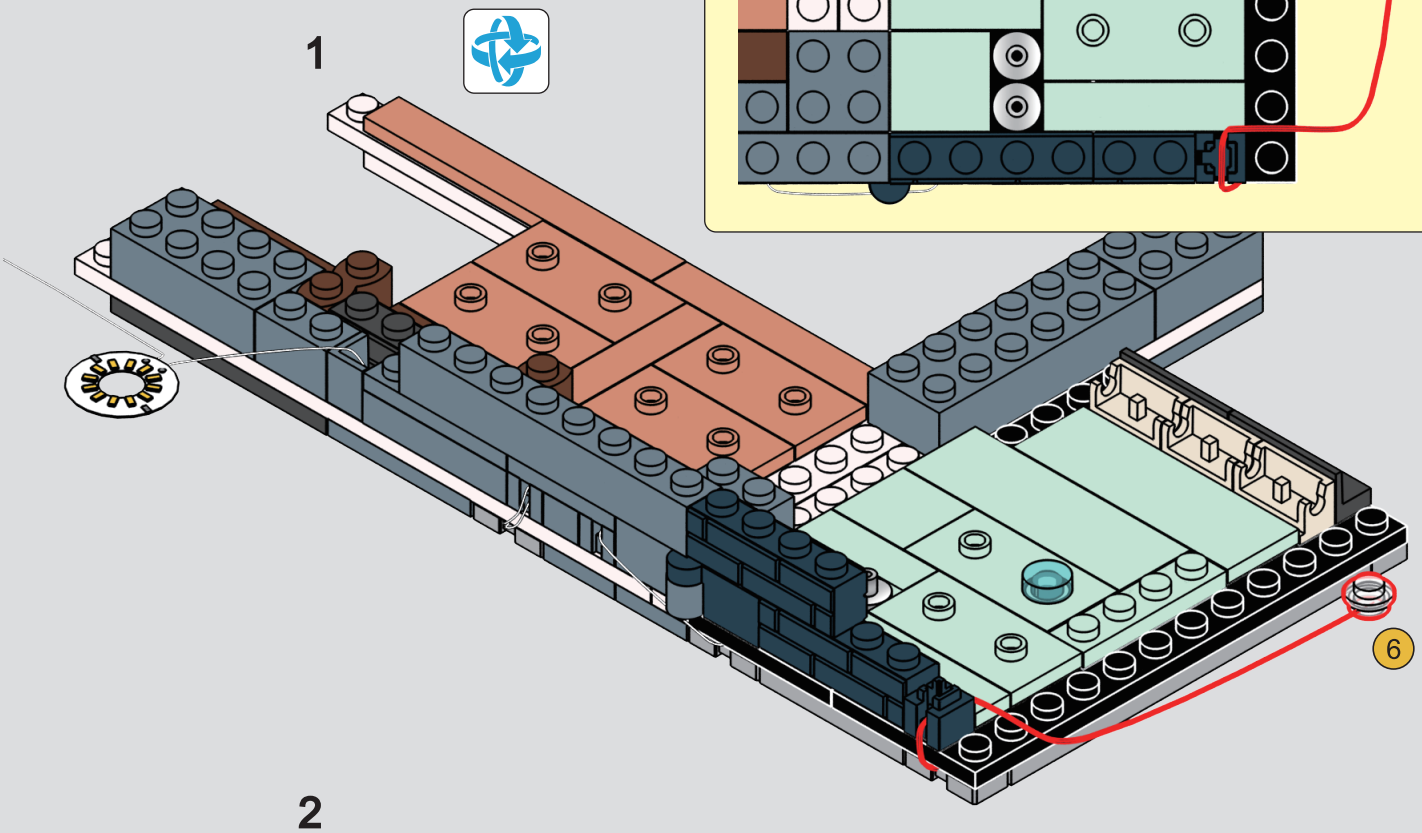

2

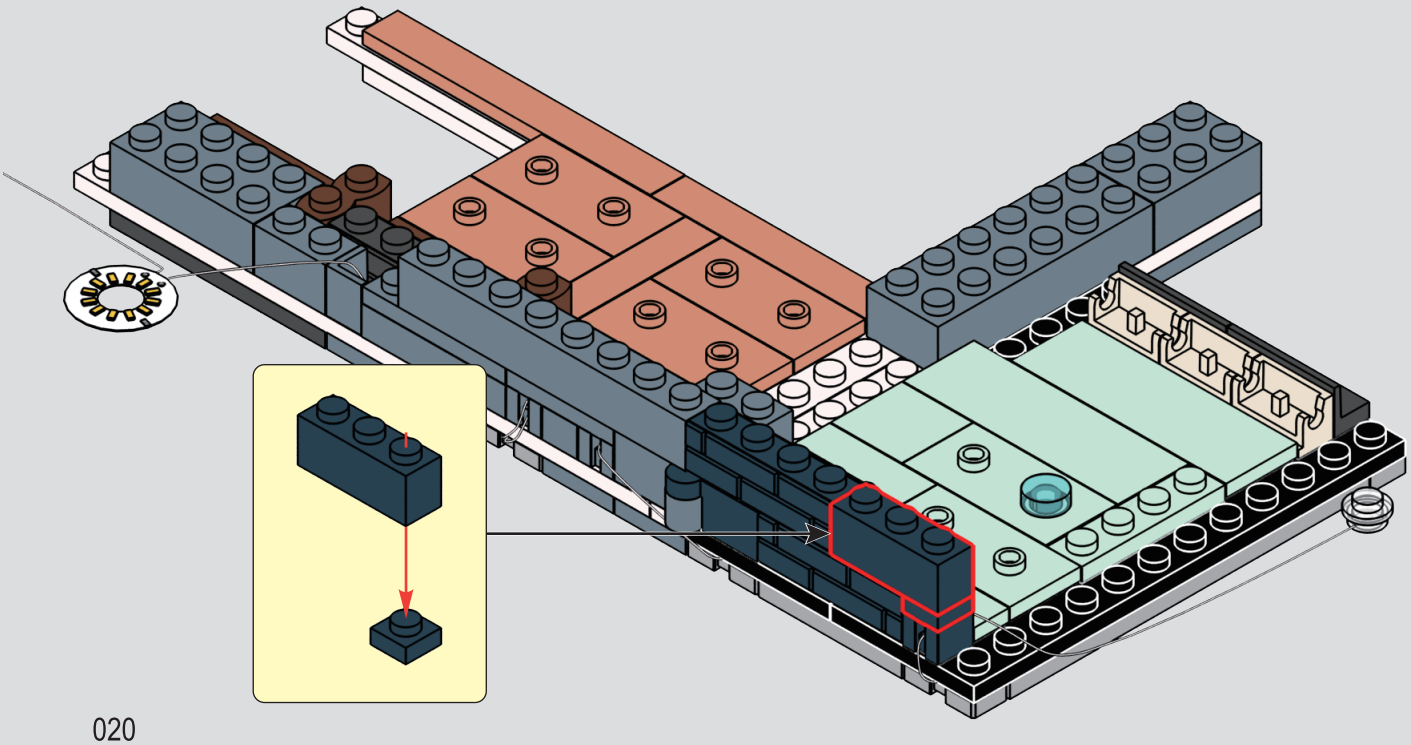

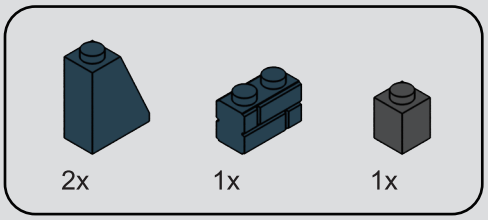

28

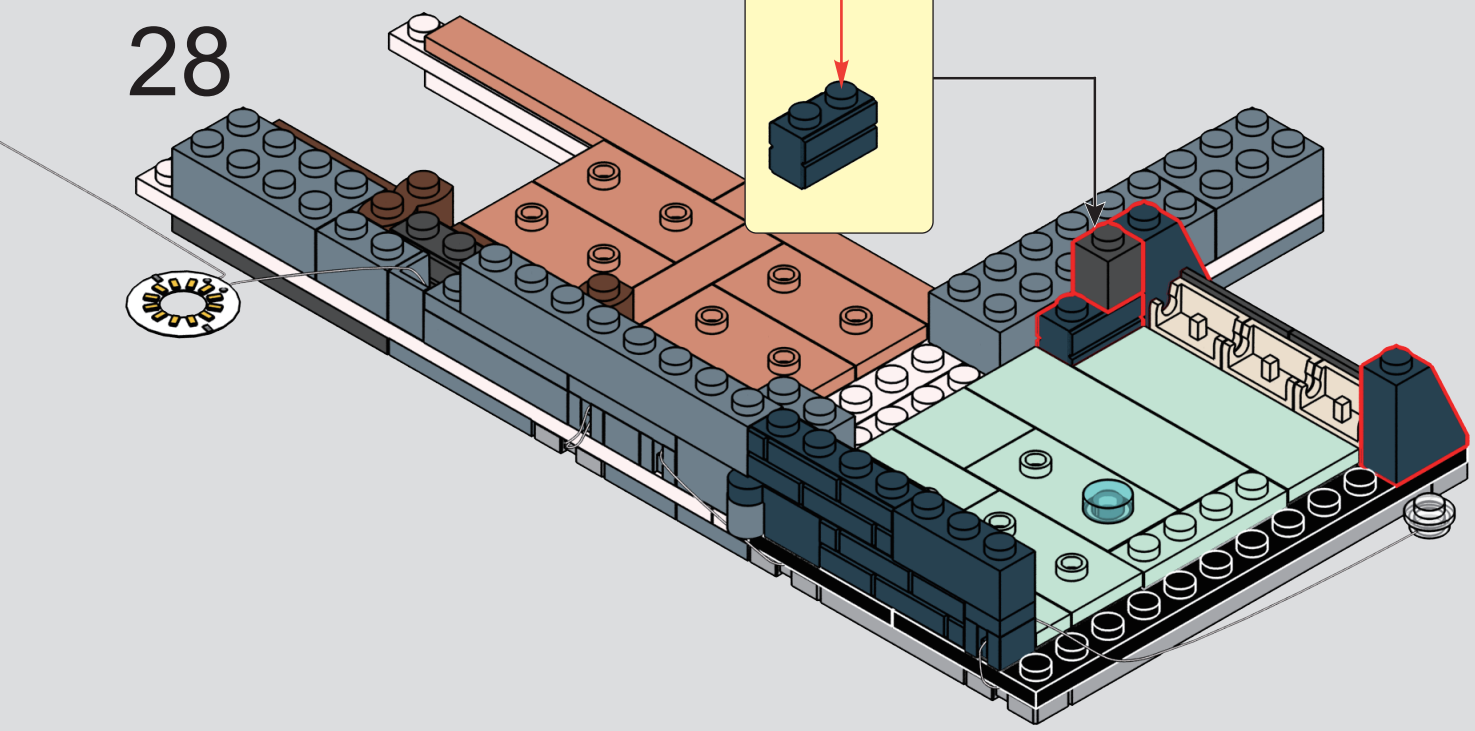

29

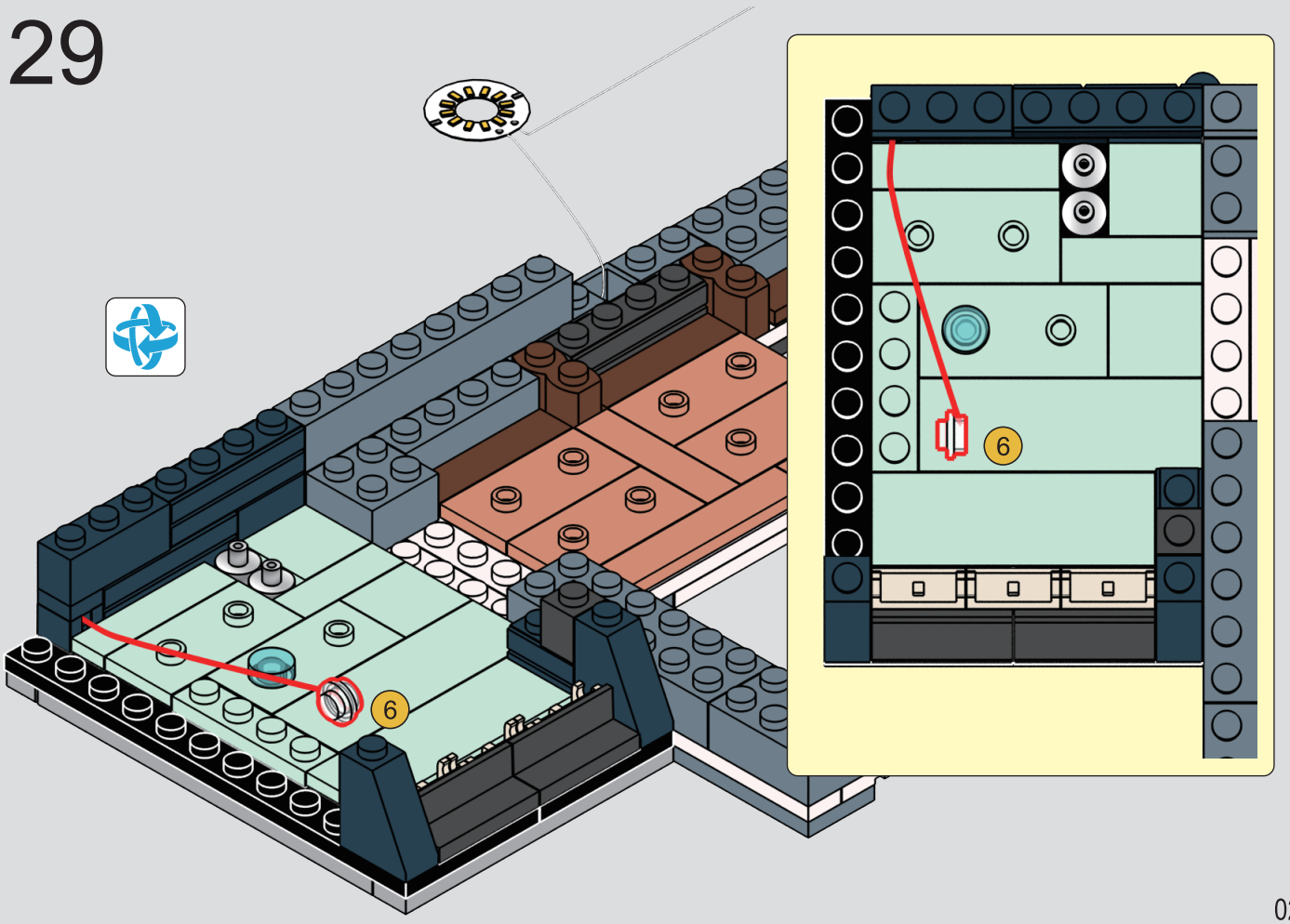

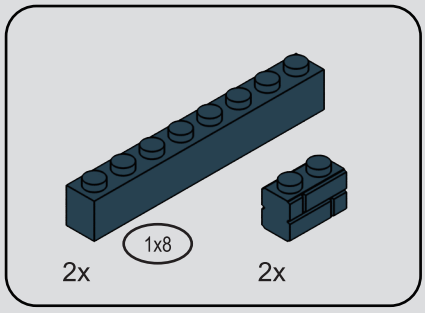

30

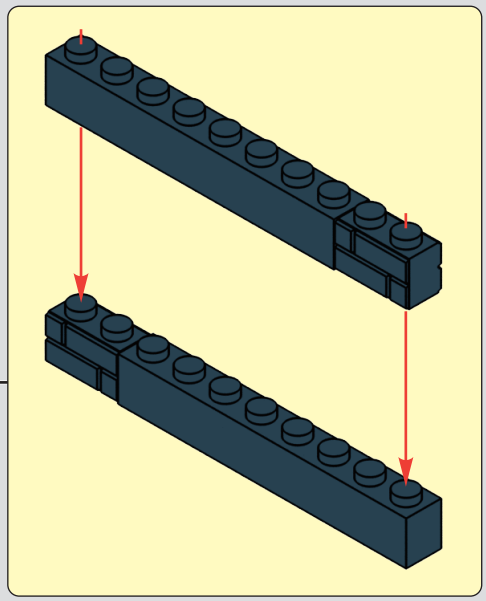

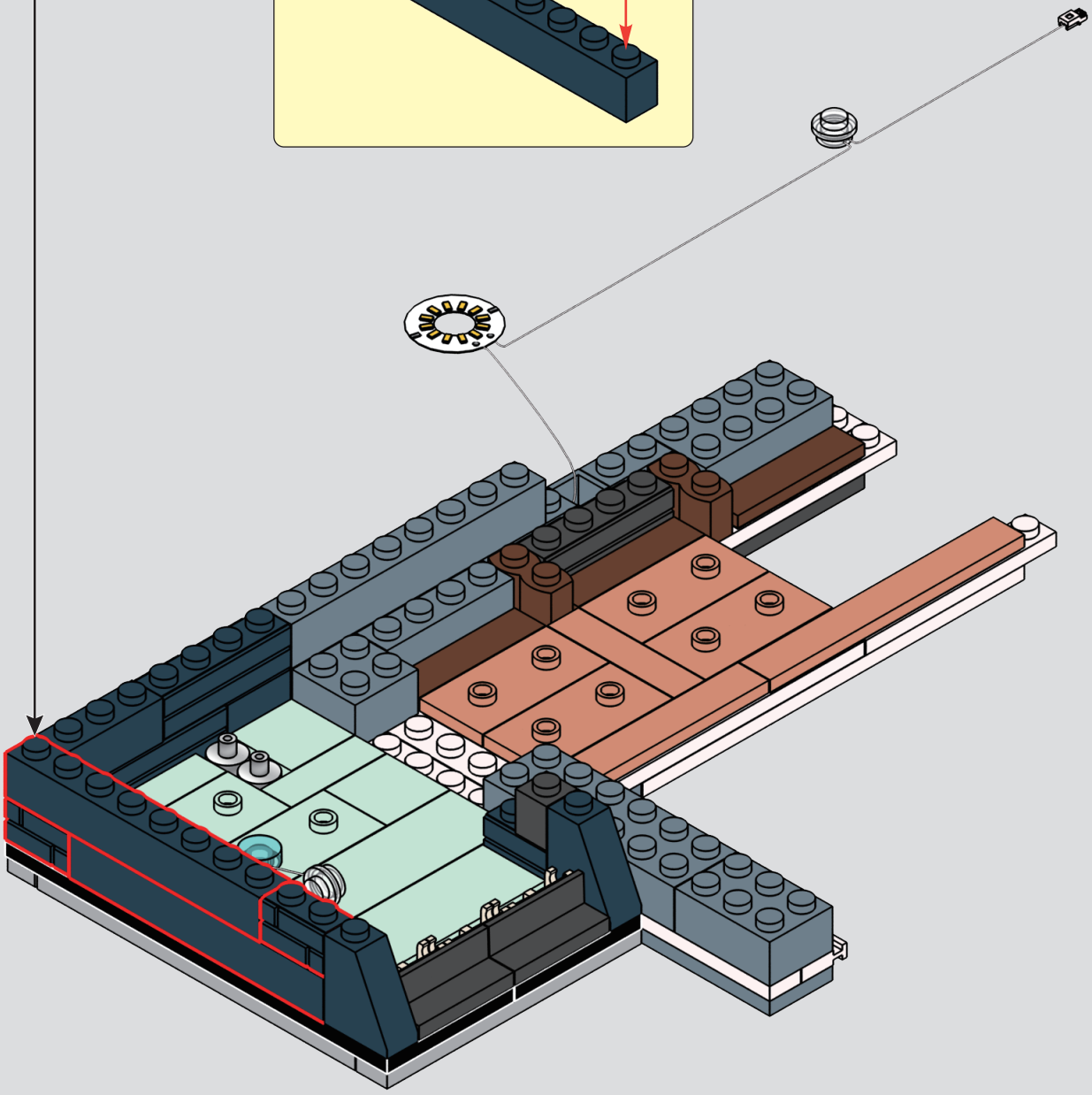

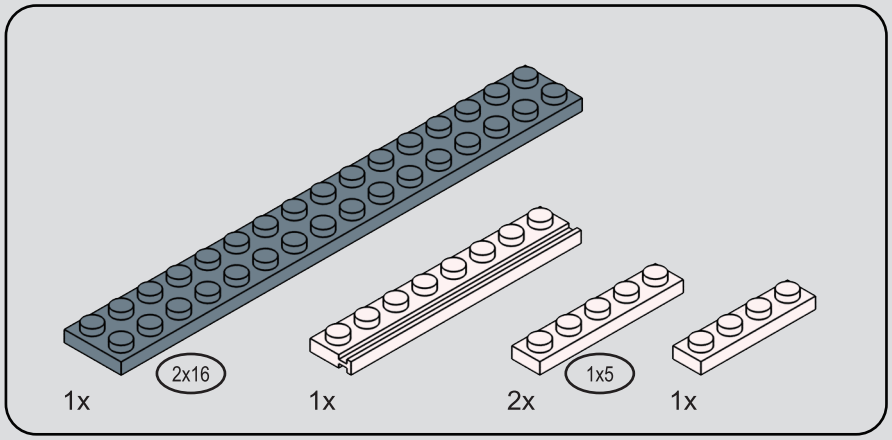

31

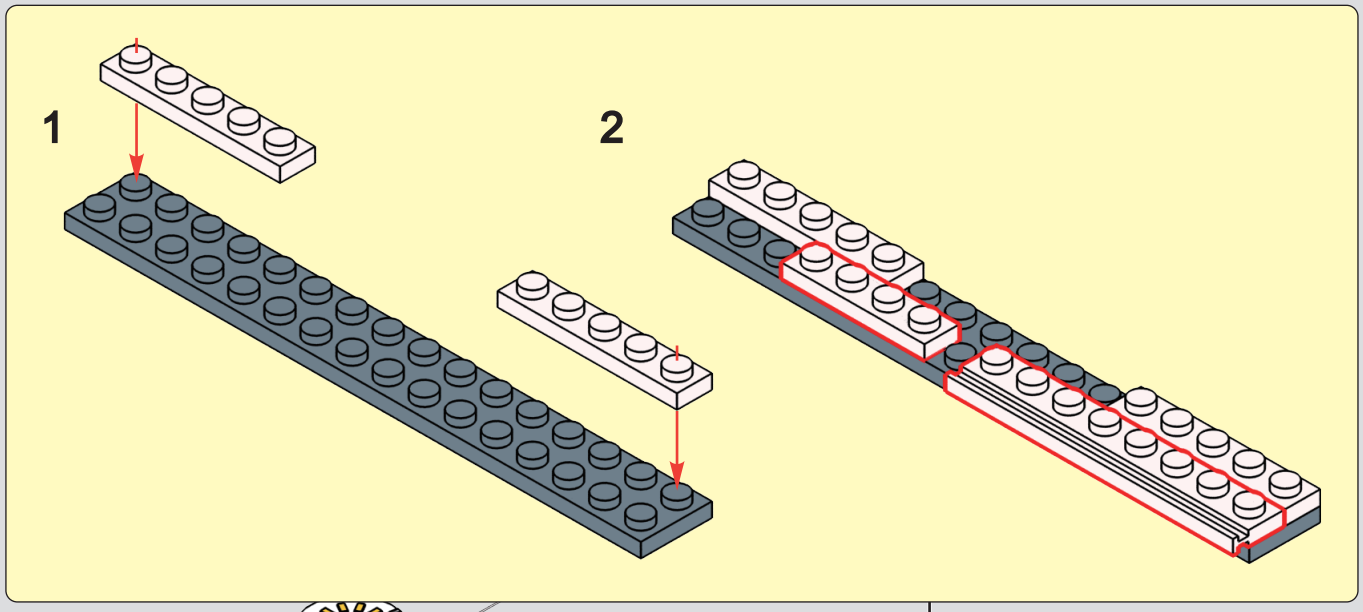

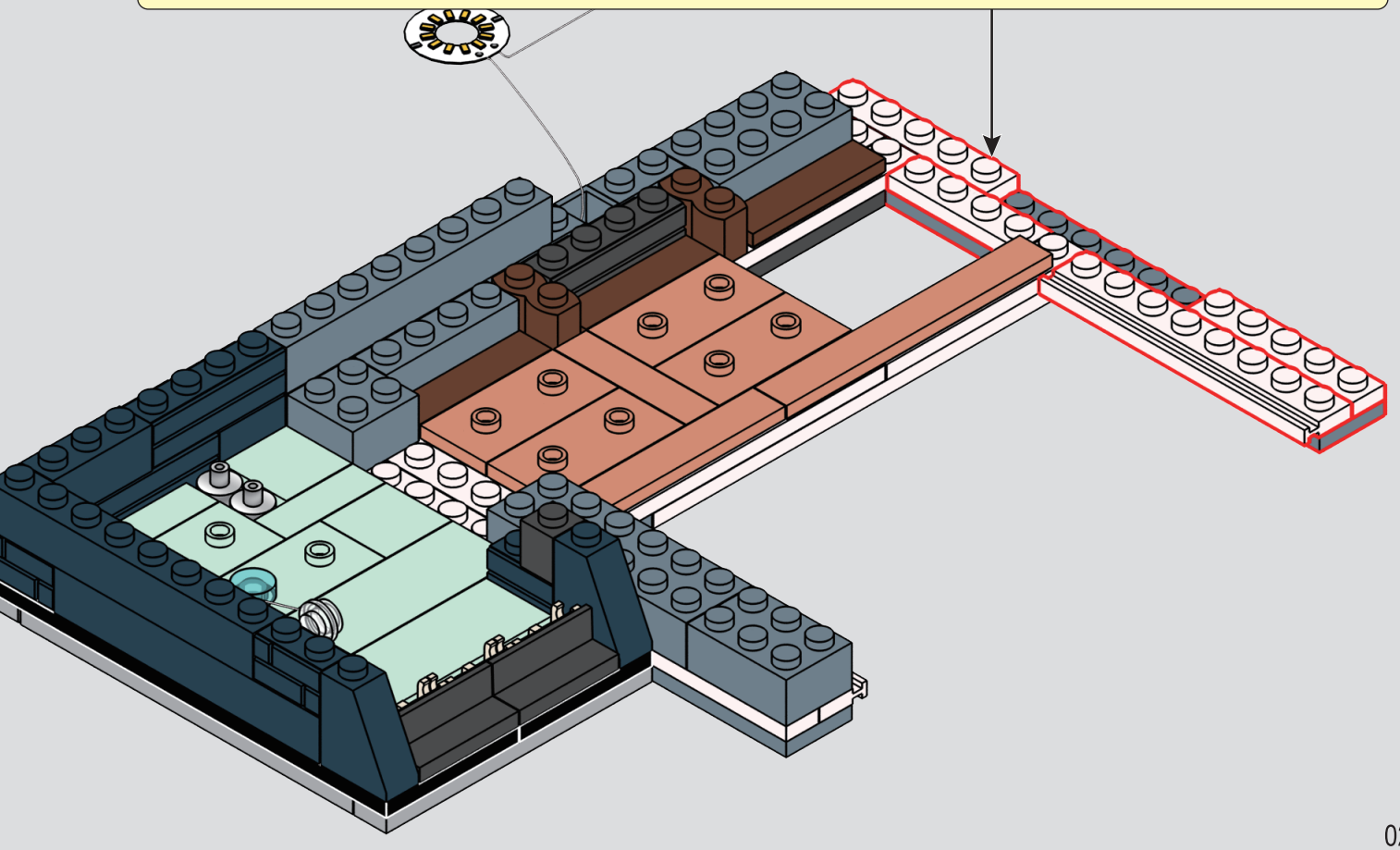

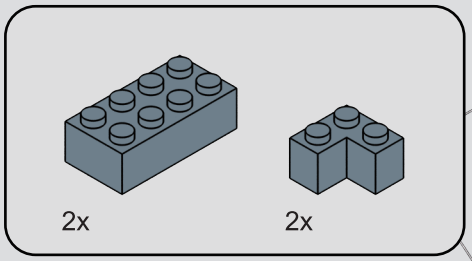

32

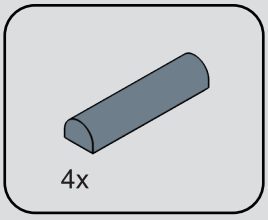

33

34

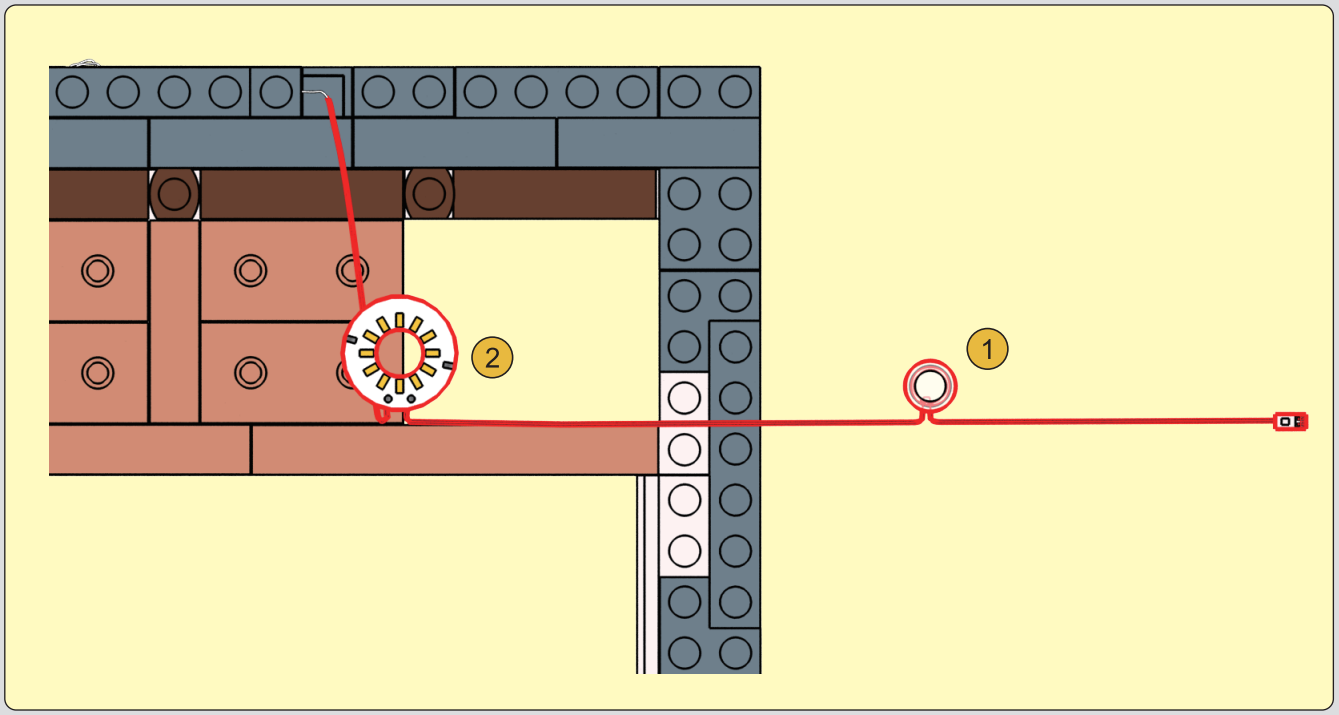

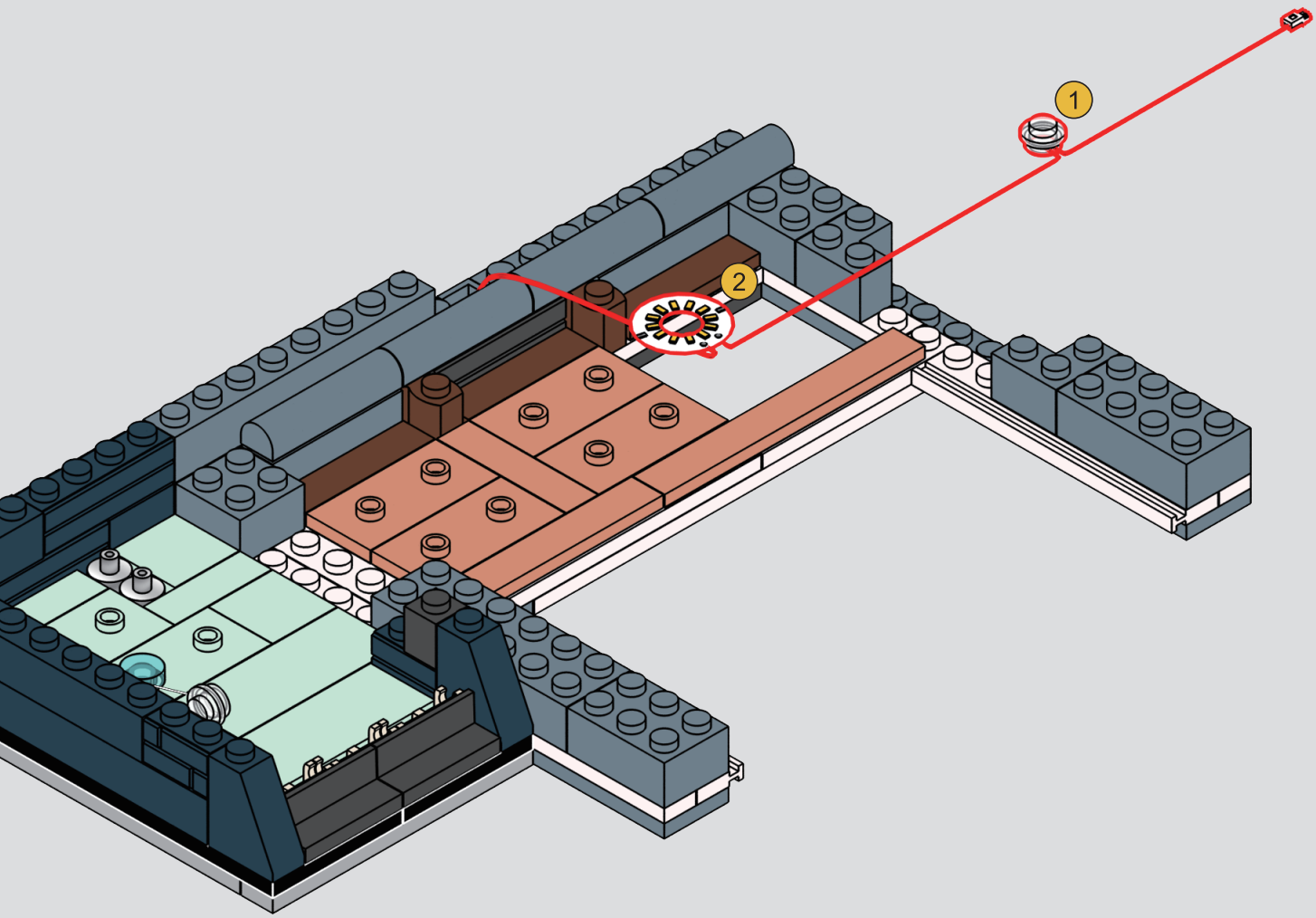

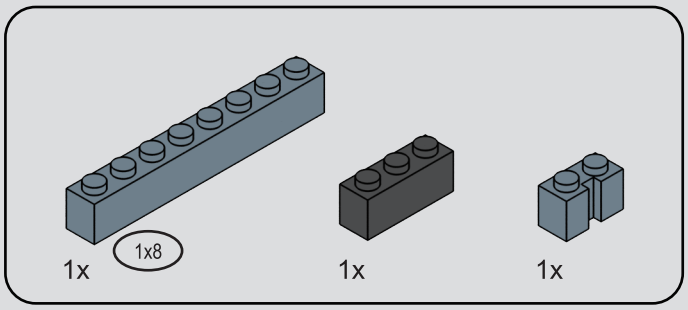

35

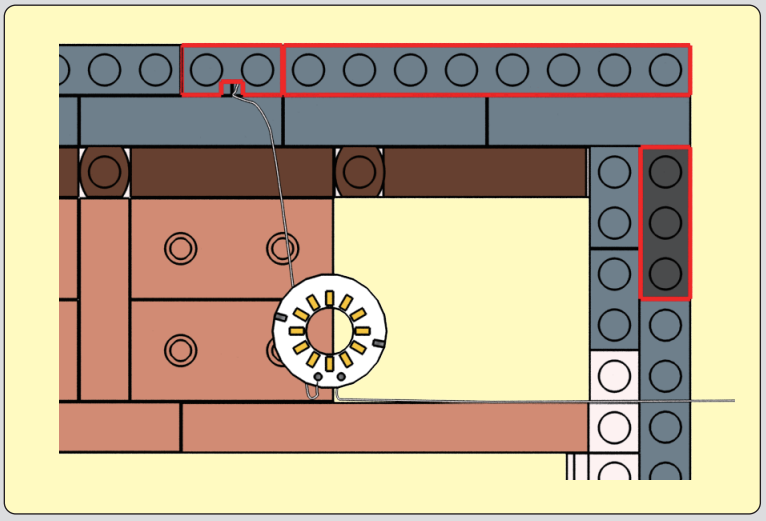

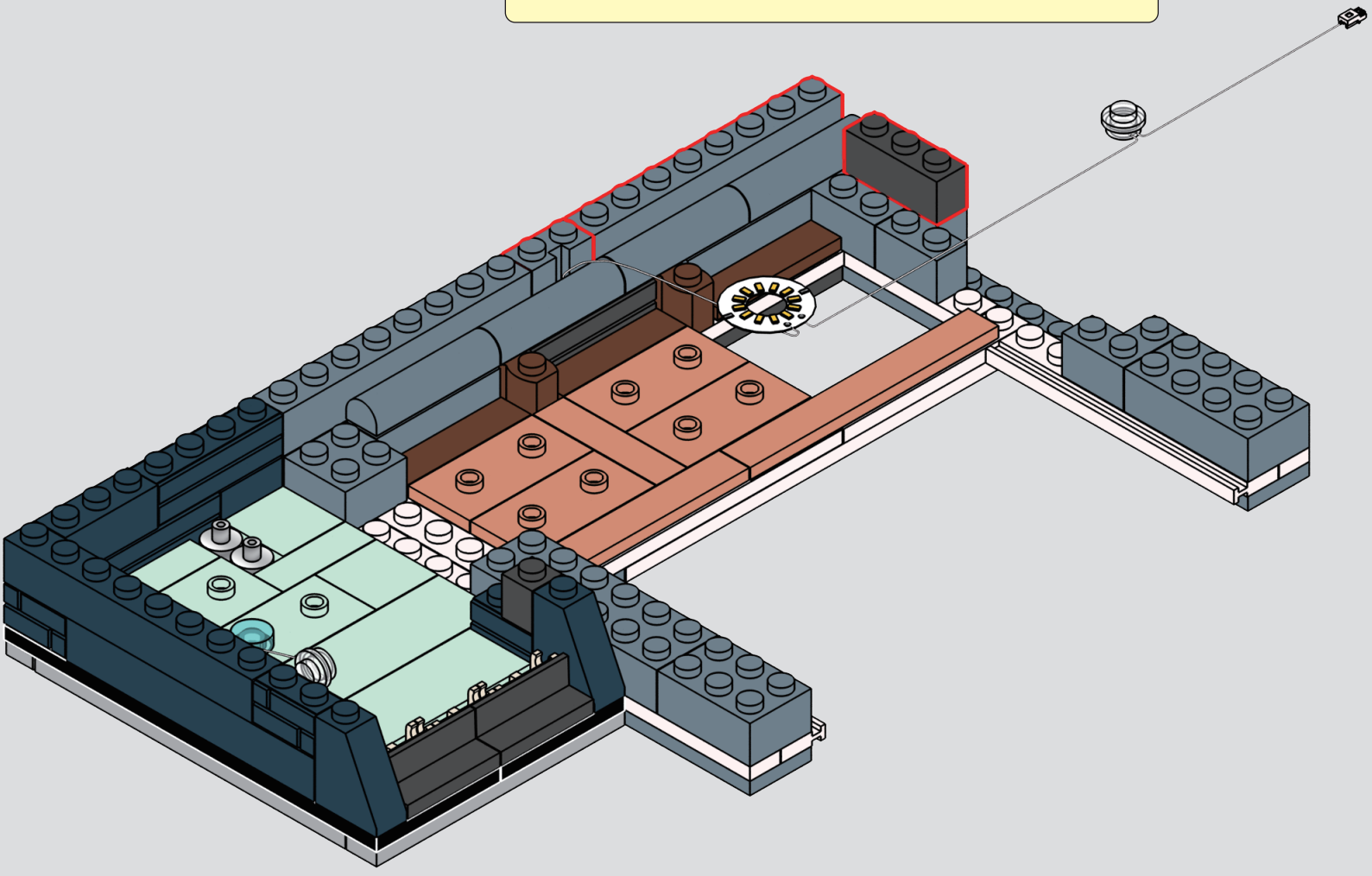

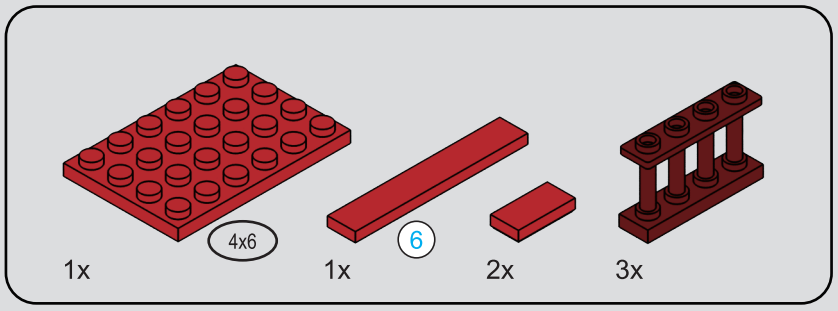



36

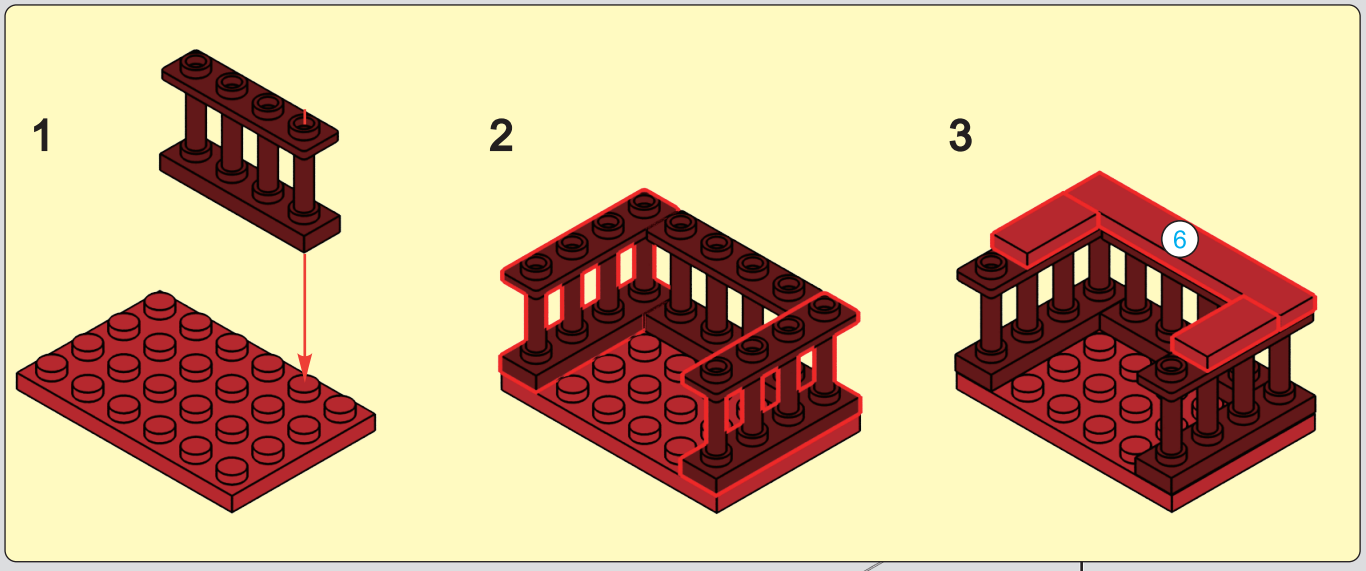

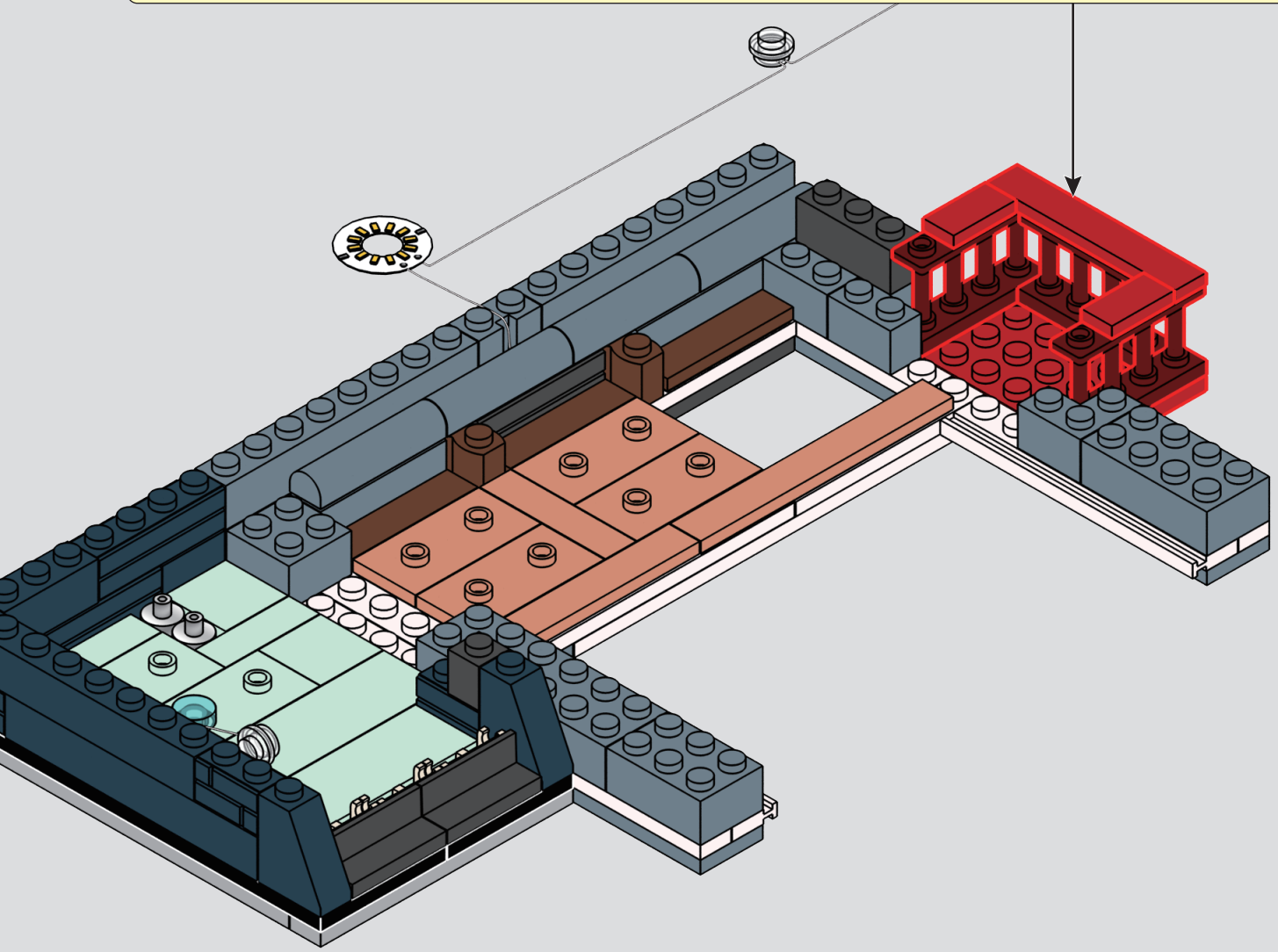

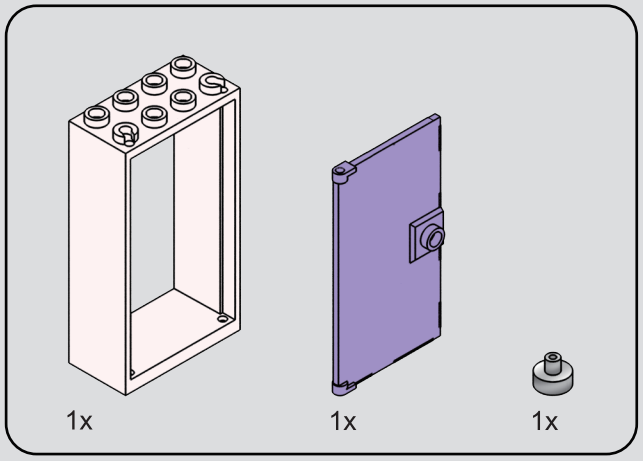

37

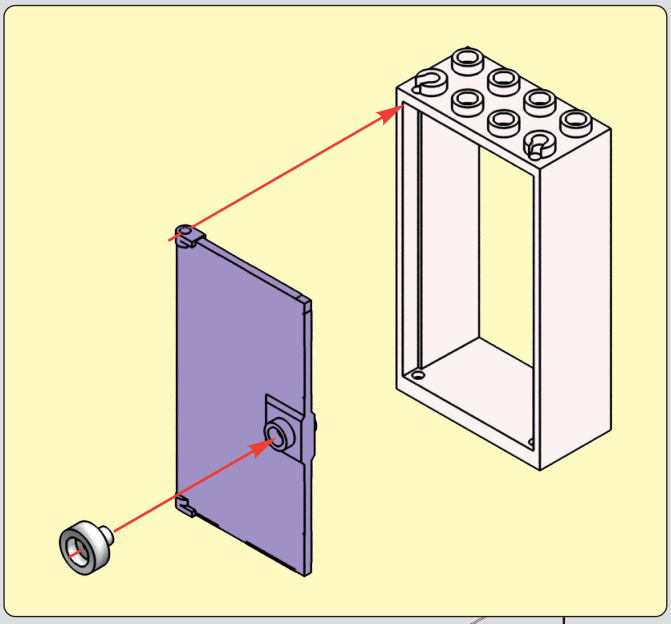

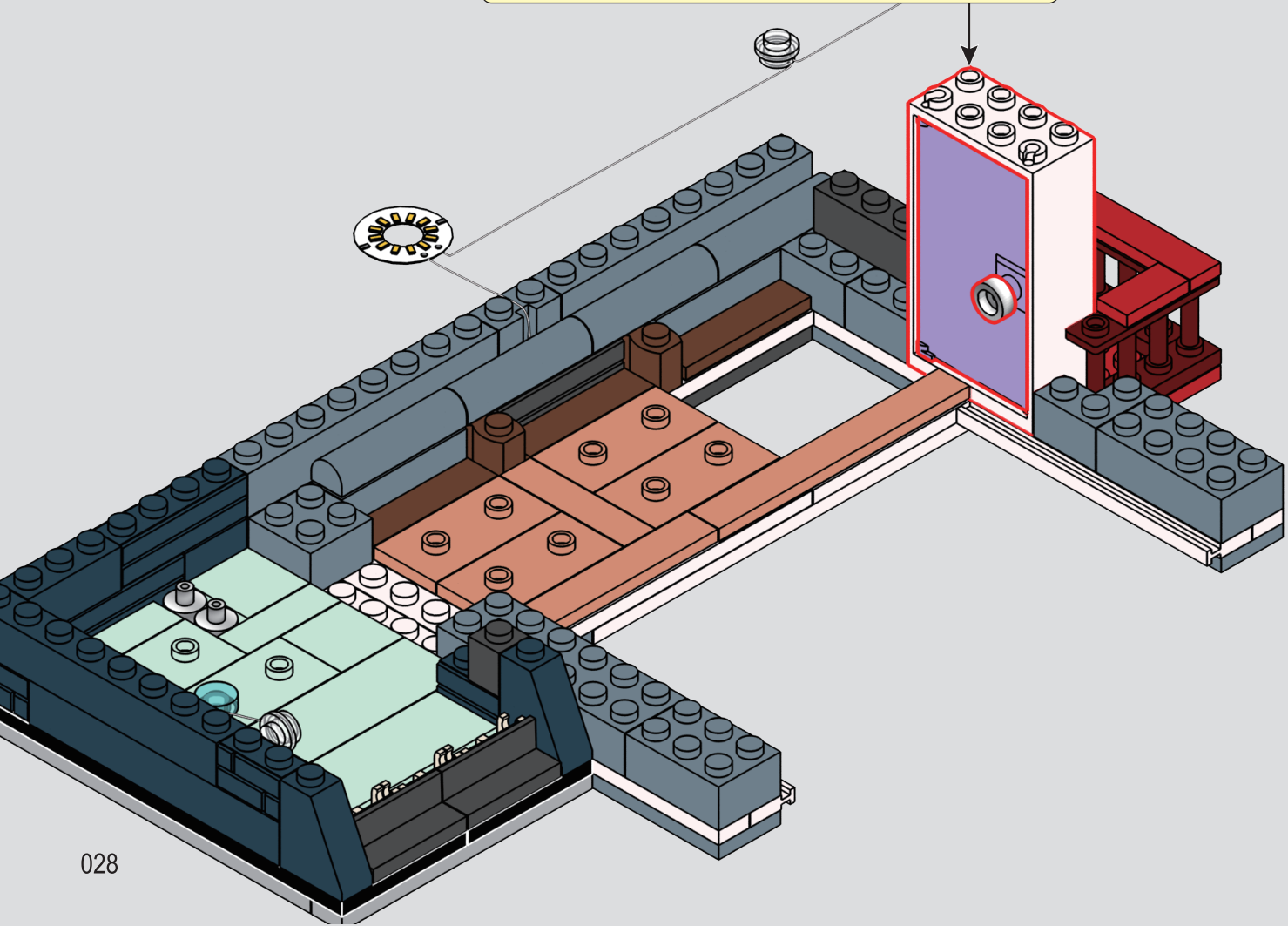

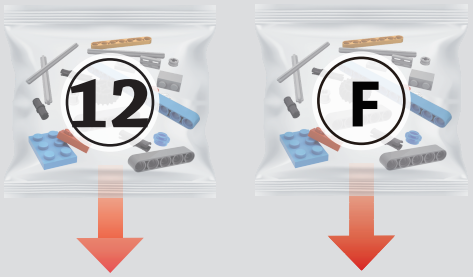
12
F

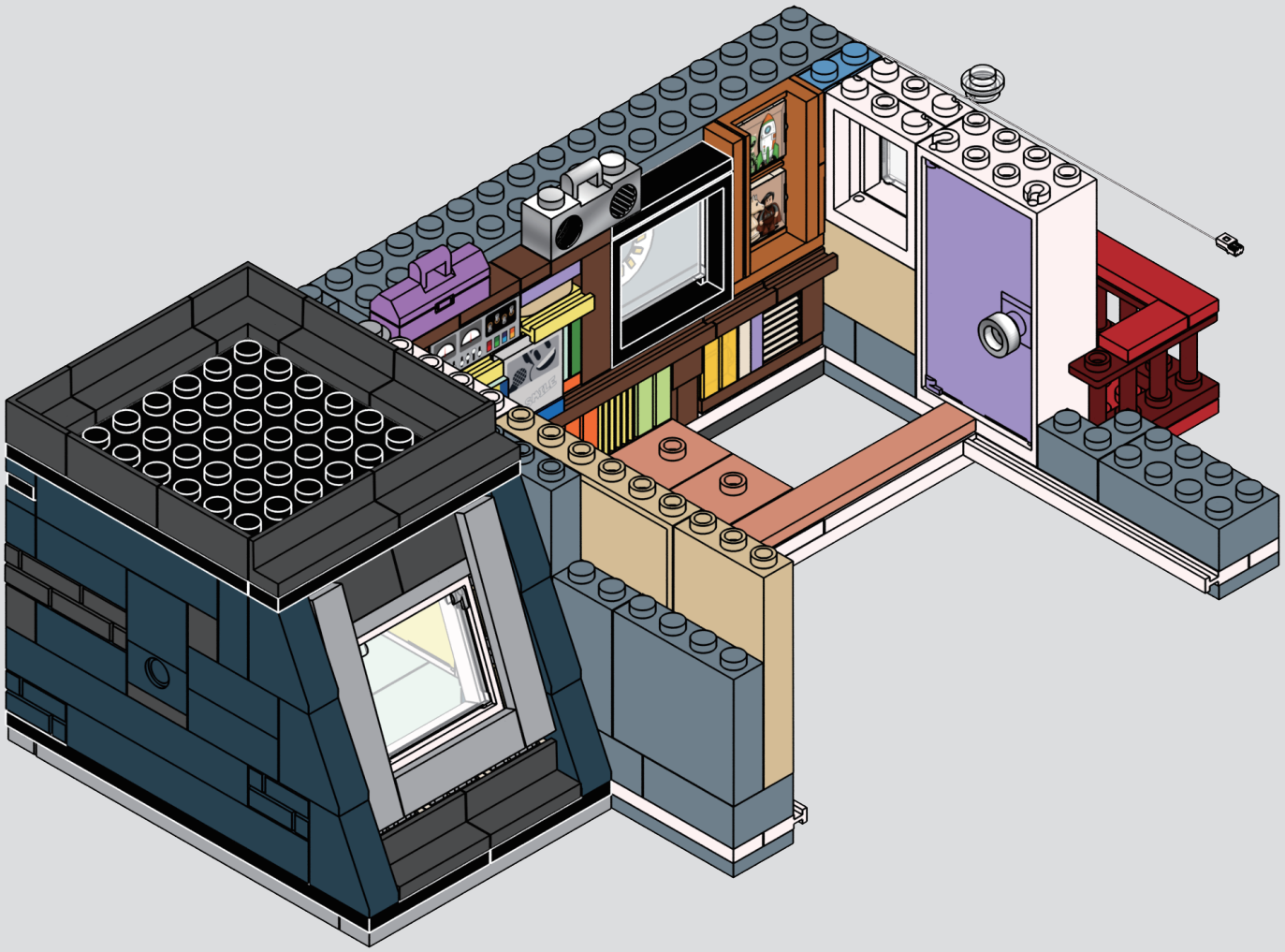

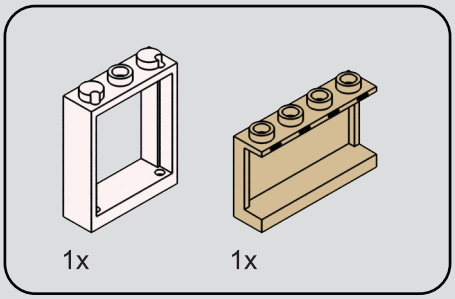

38

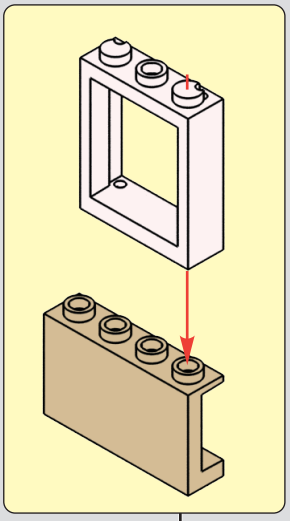

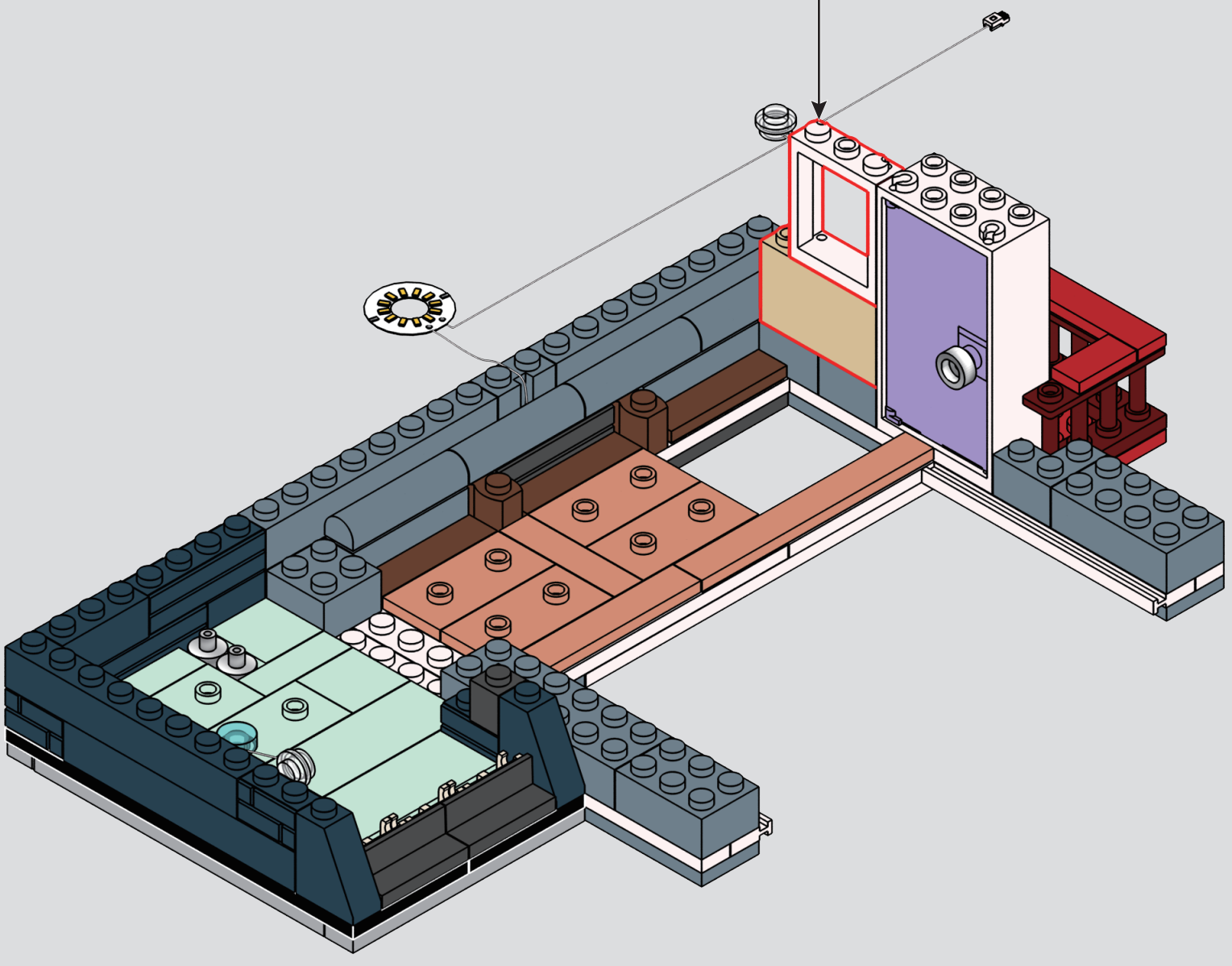

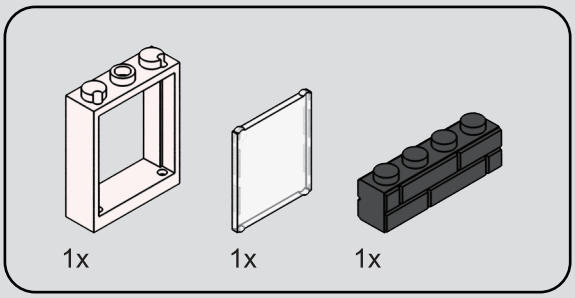

39

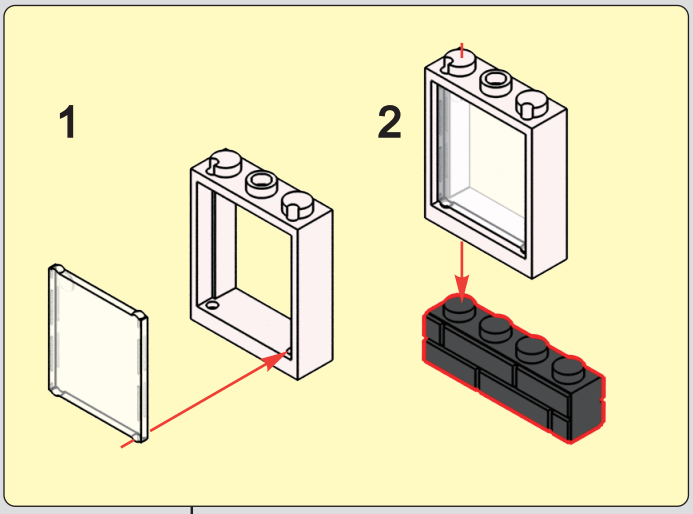

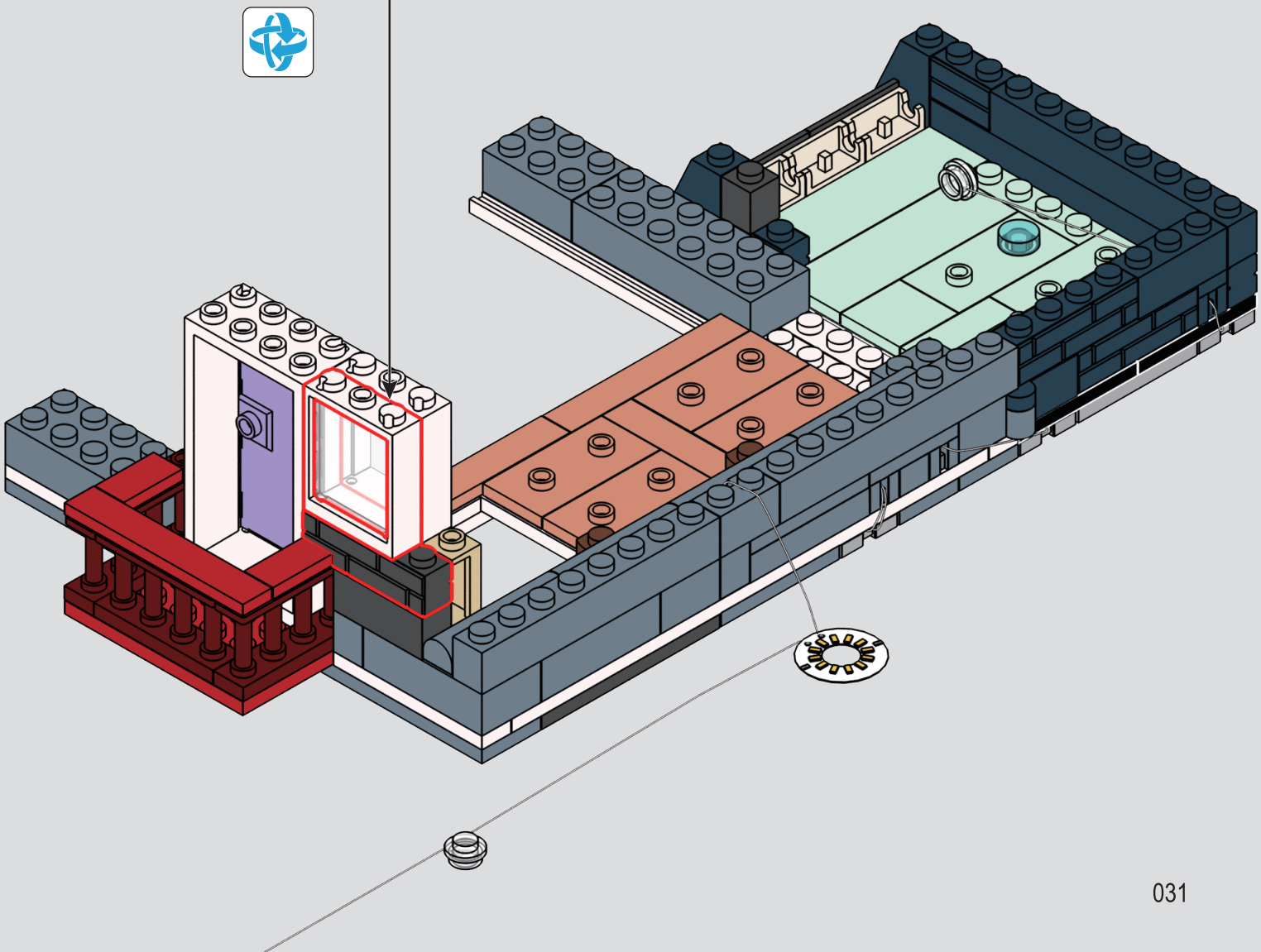

40

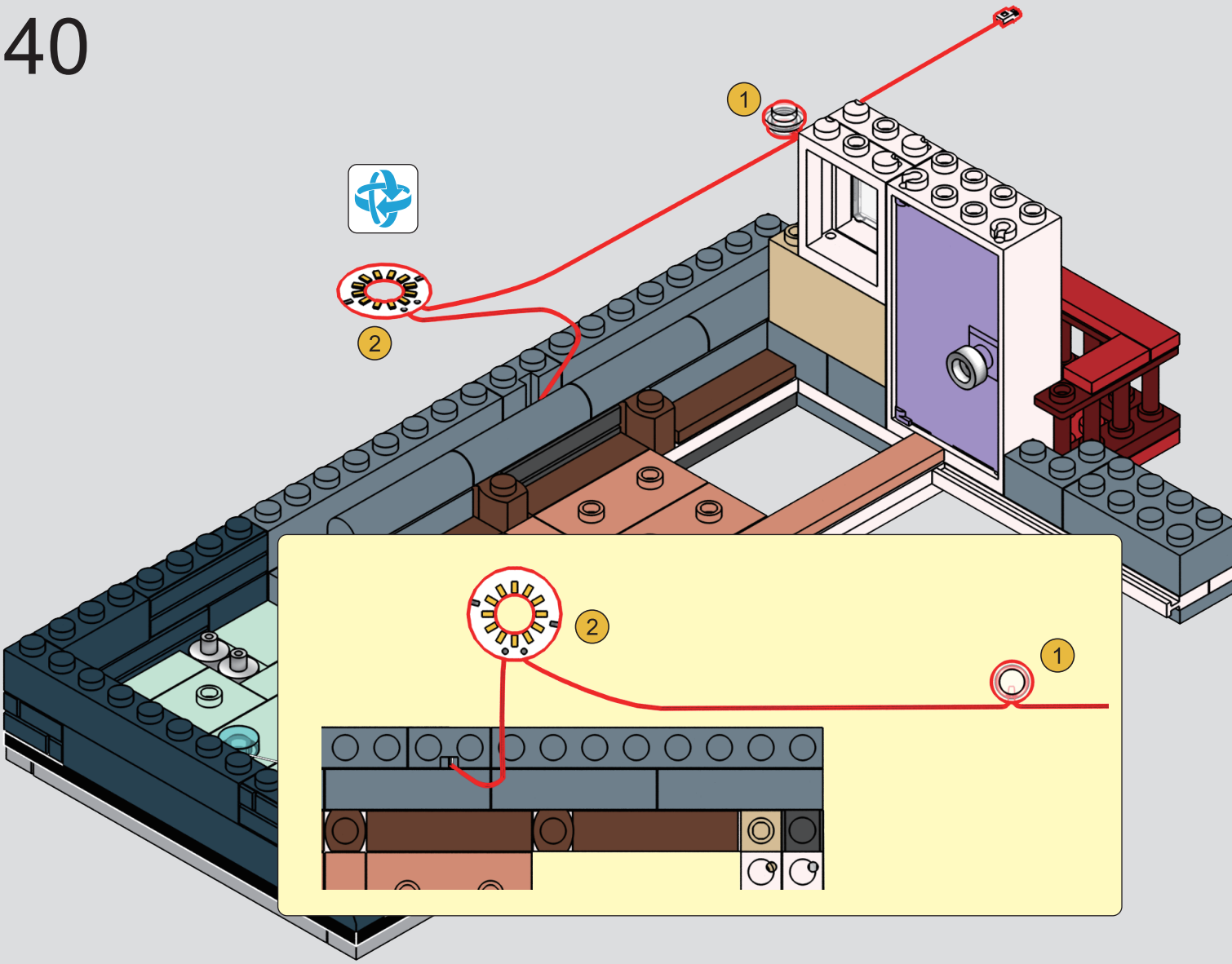

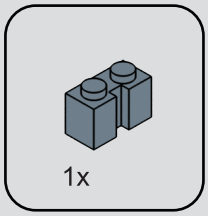

41

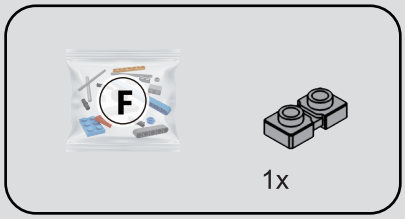

42

1

2

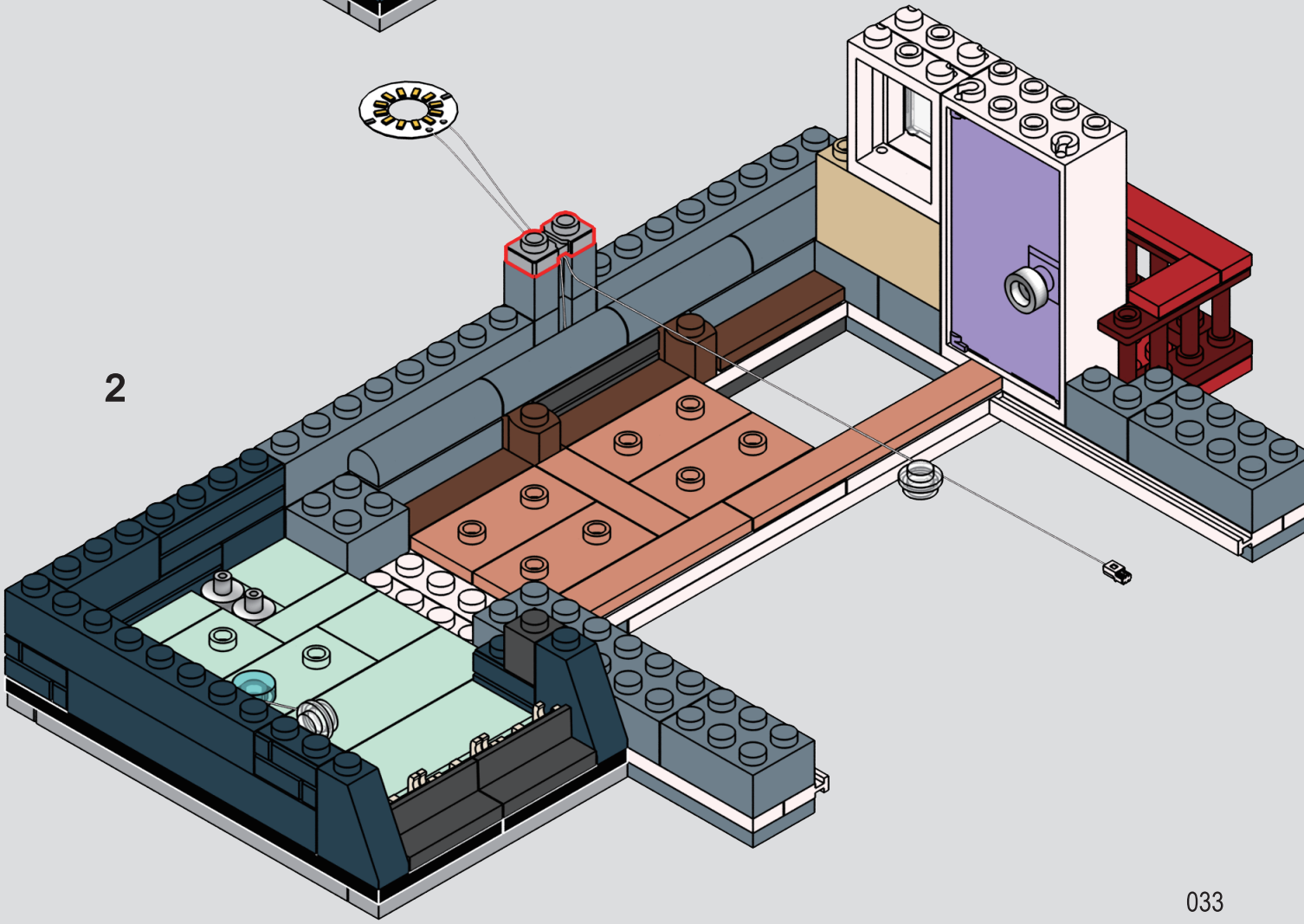

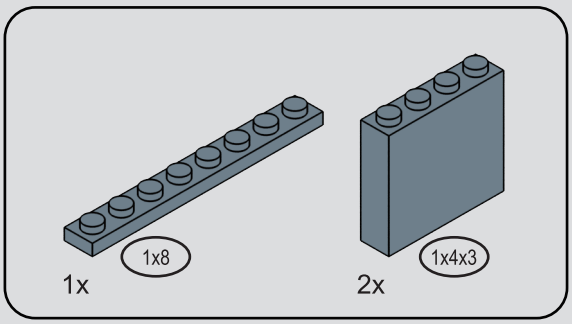

43

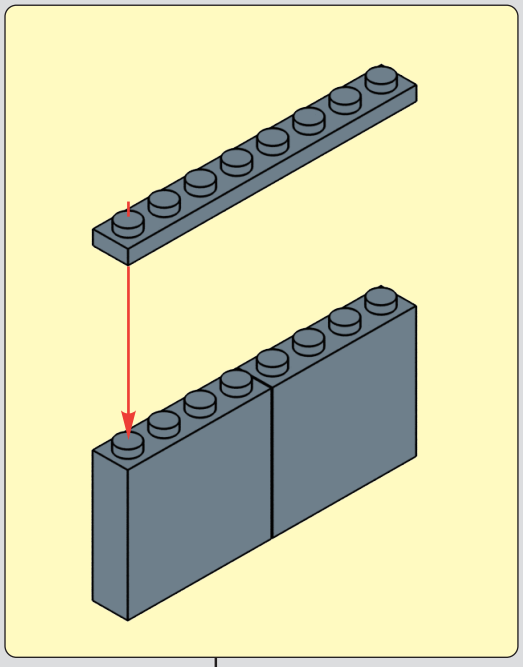

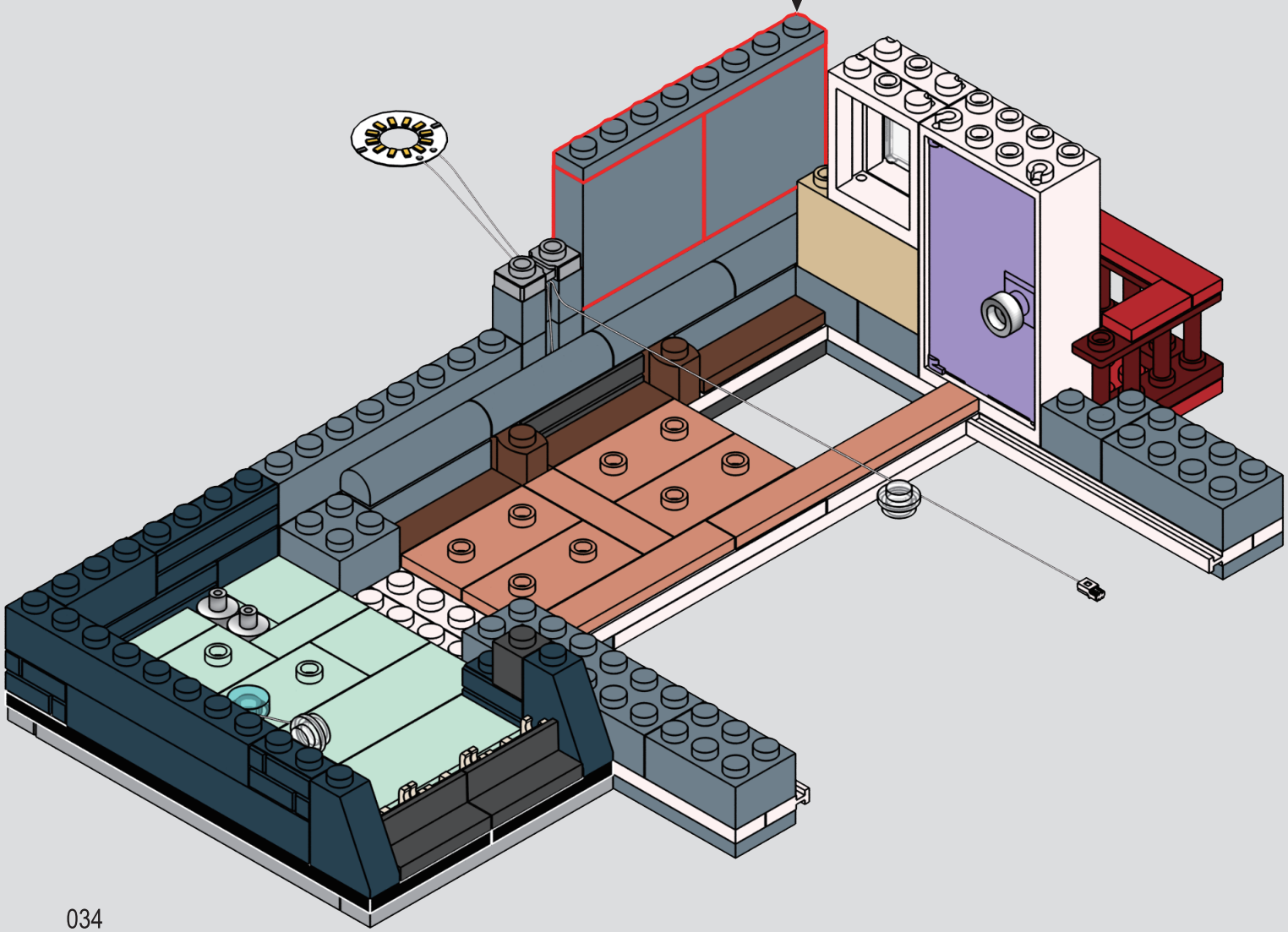

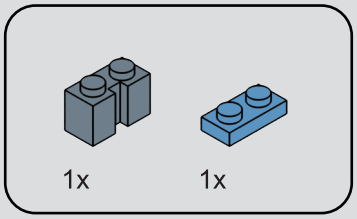

44

1

2

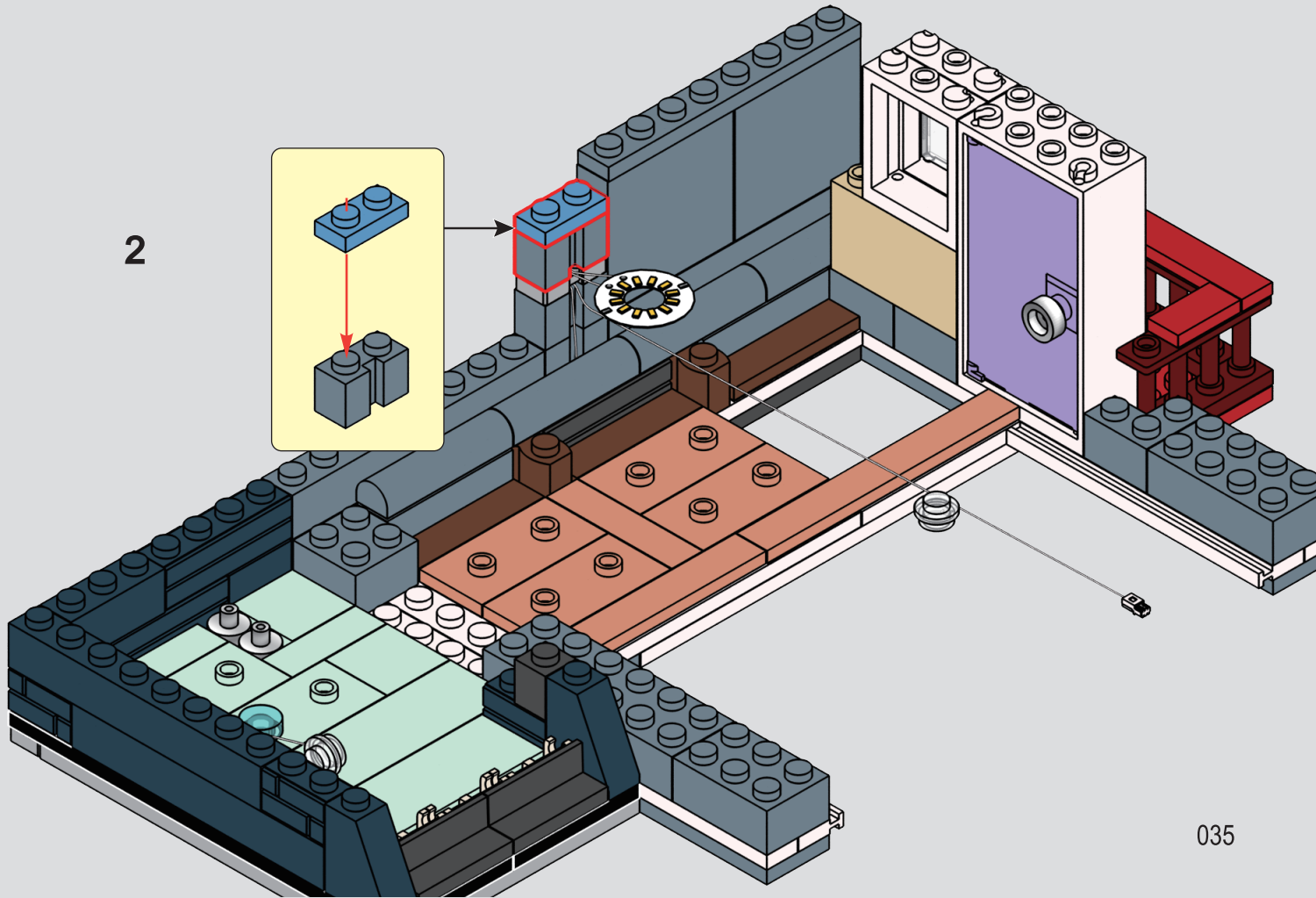

45

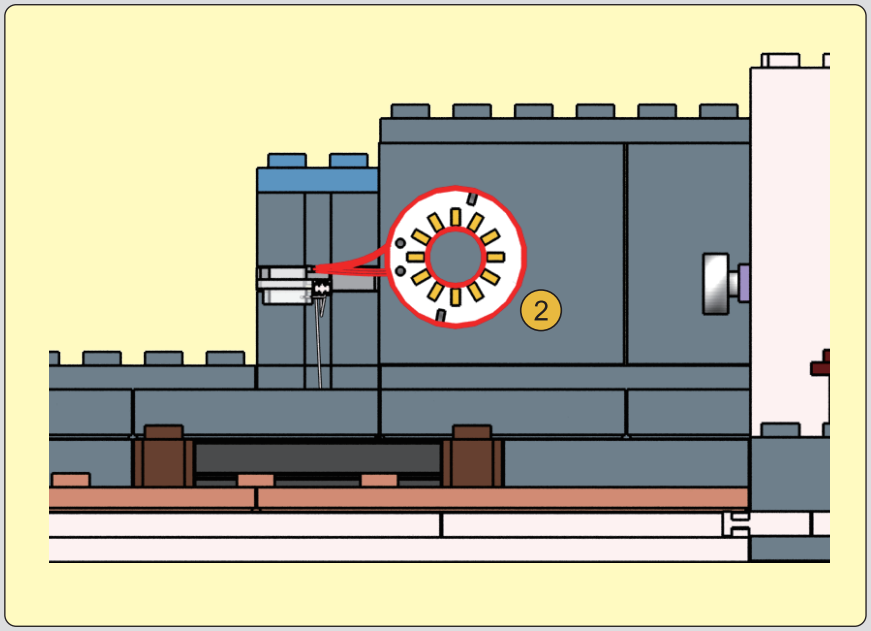

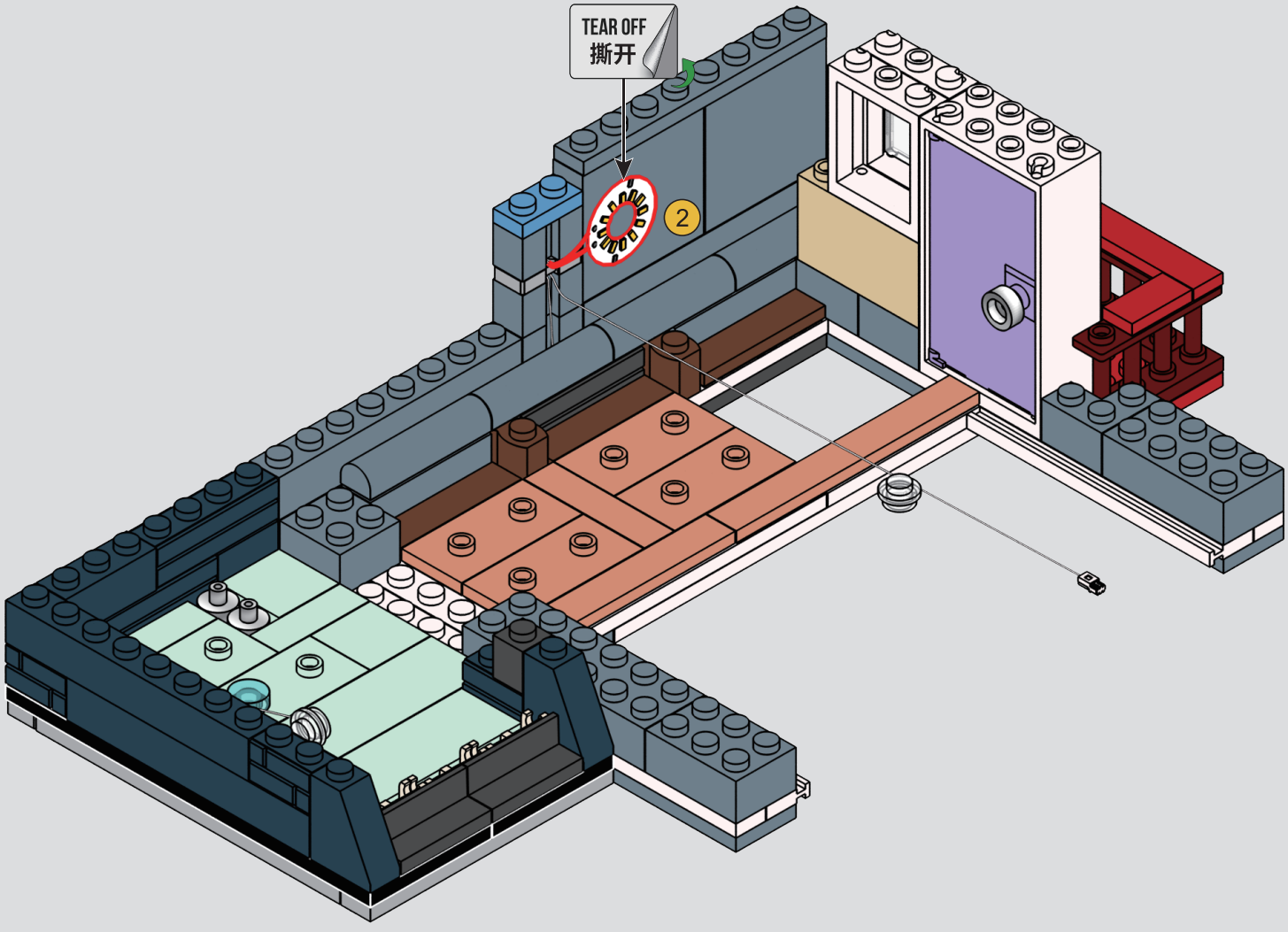

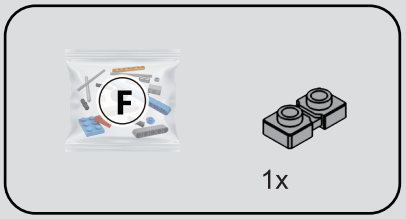

46

1

2

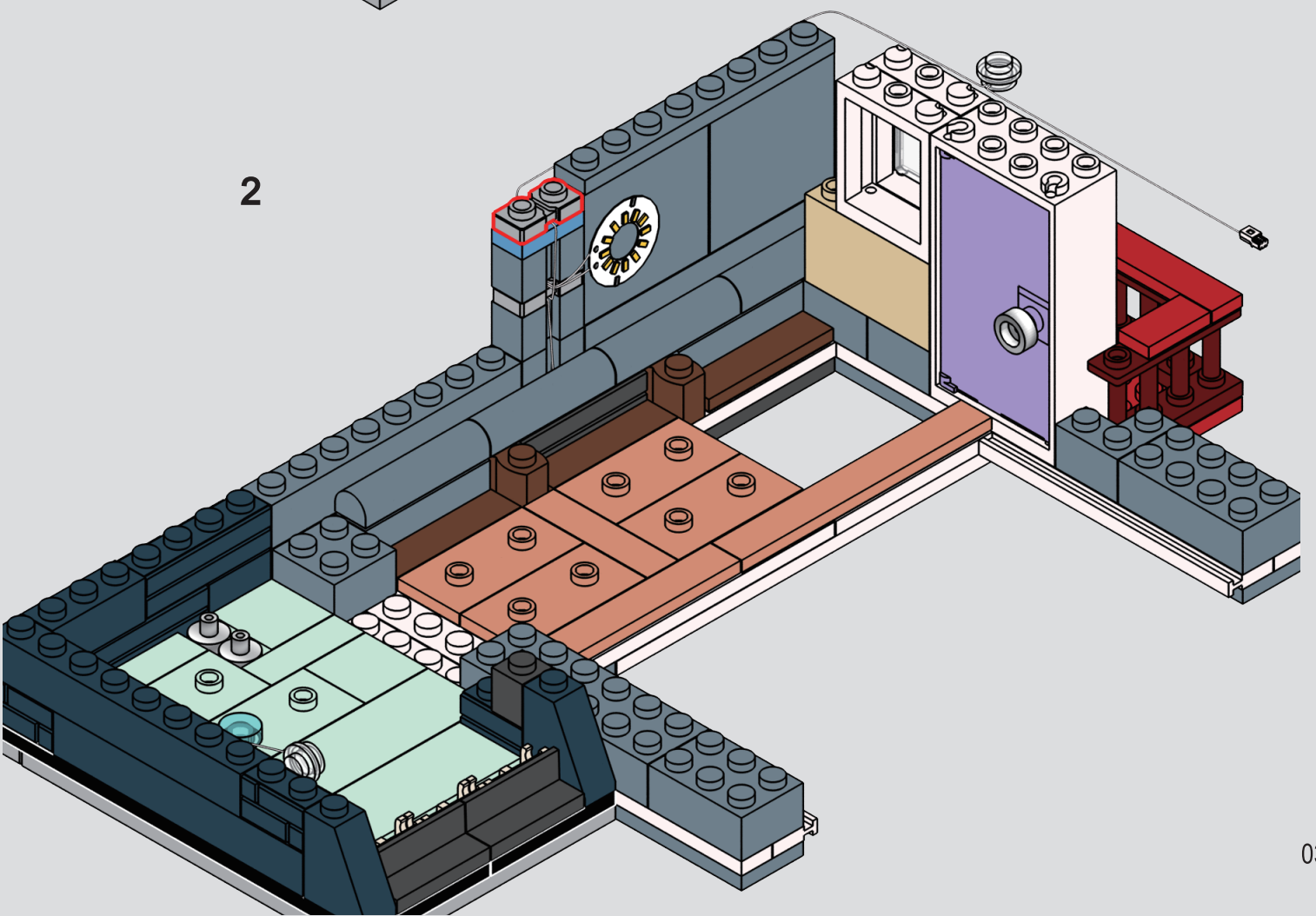

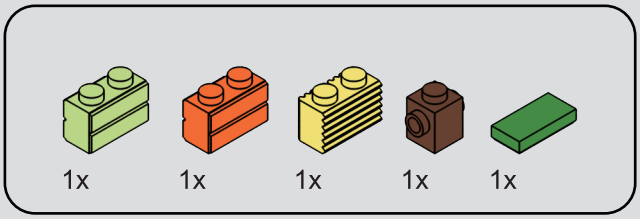

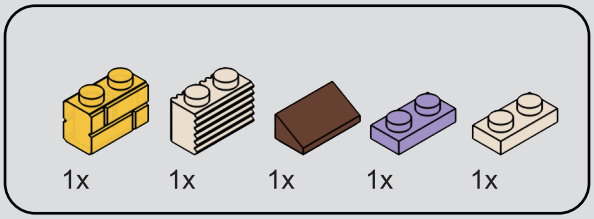

47

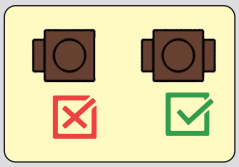

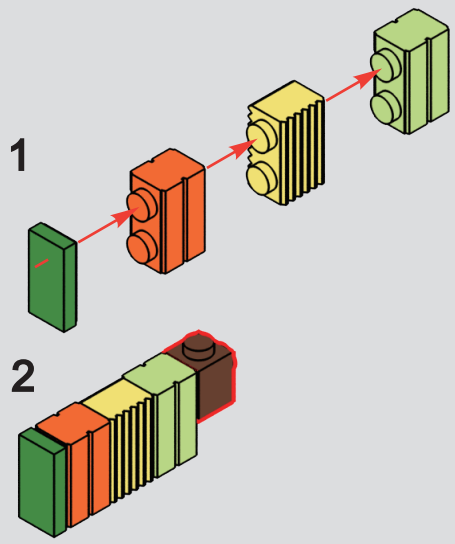

48

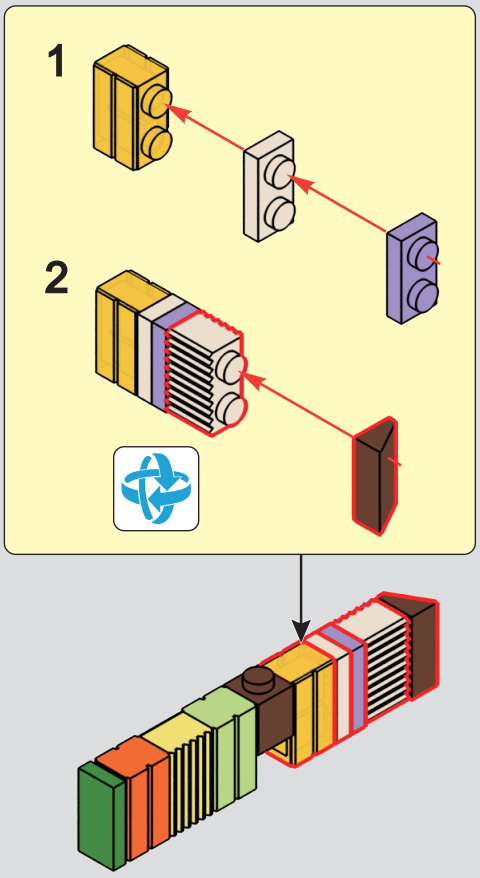

49

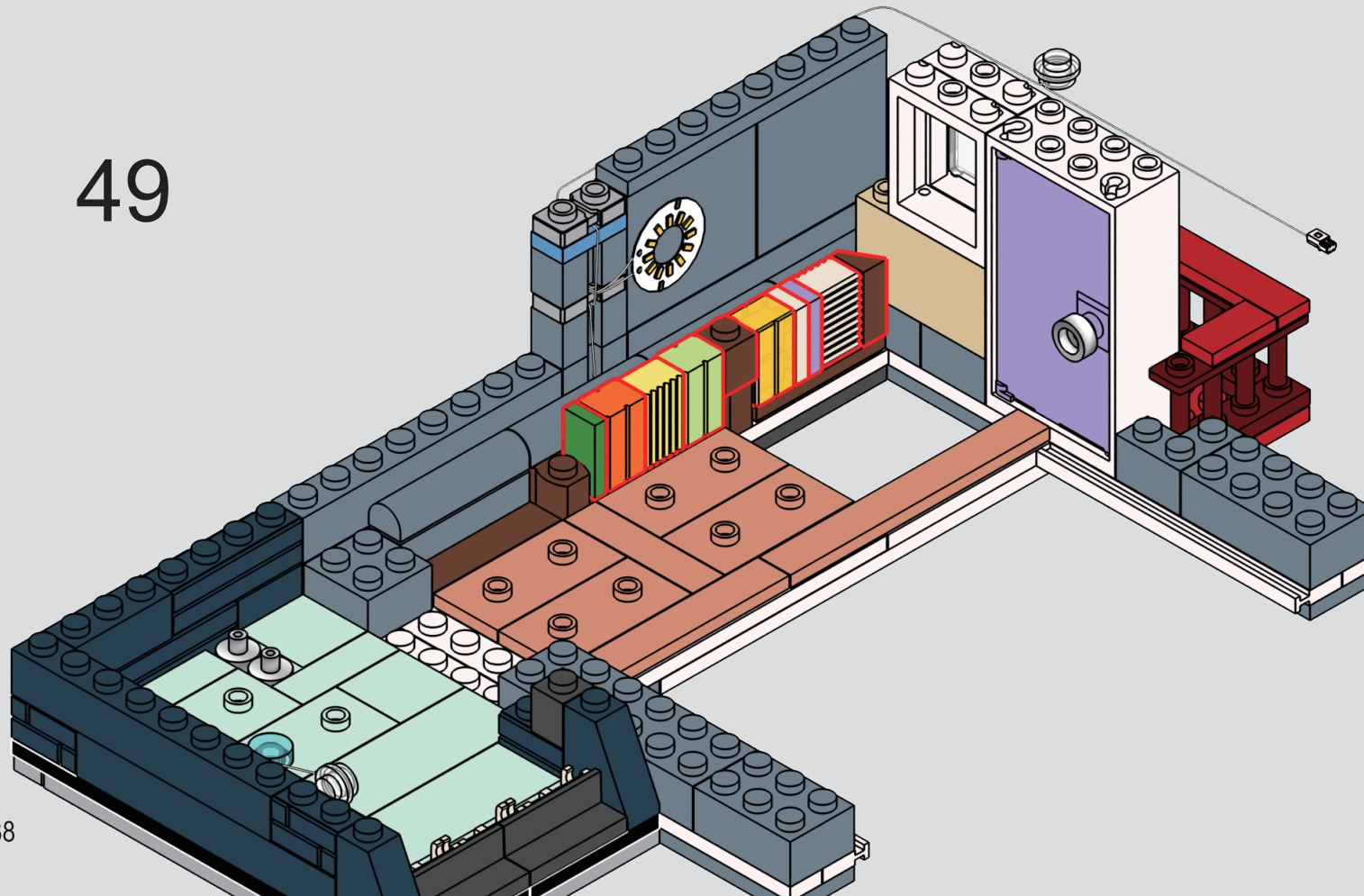

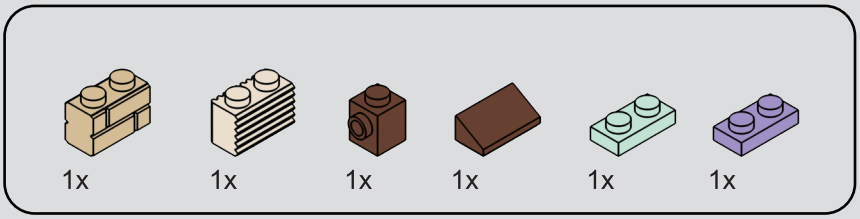

50

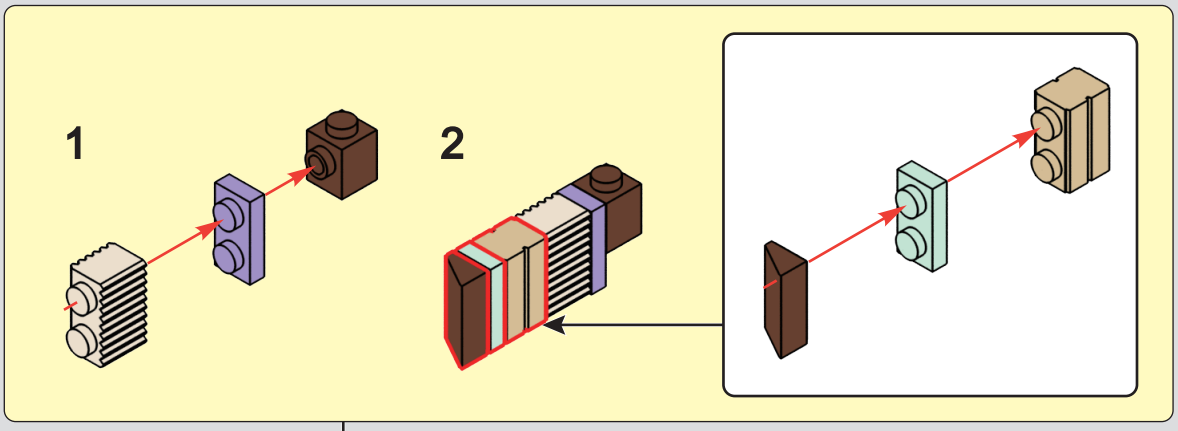

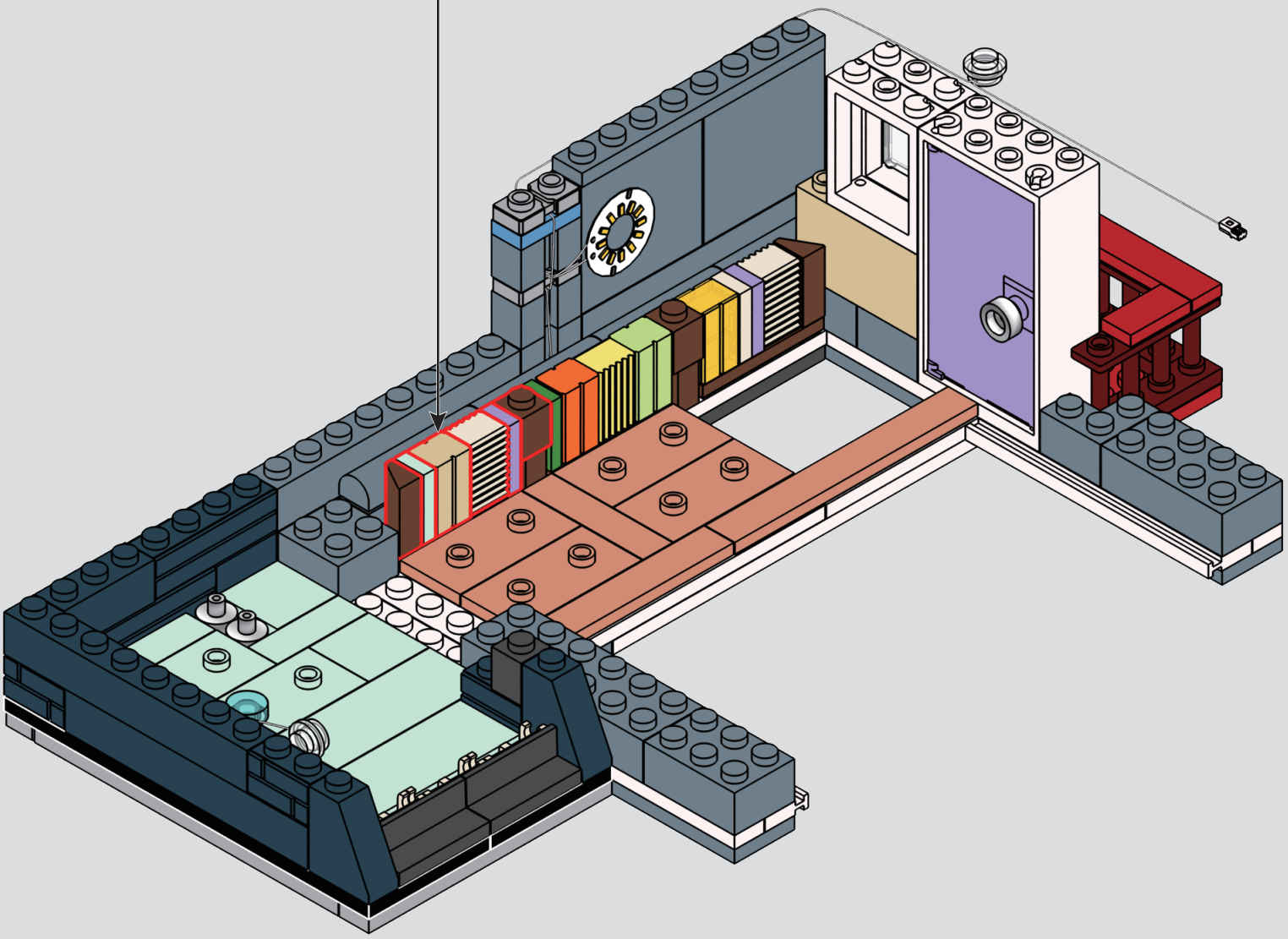

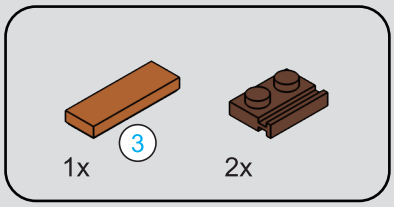

51

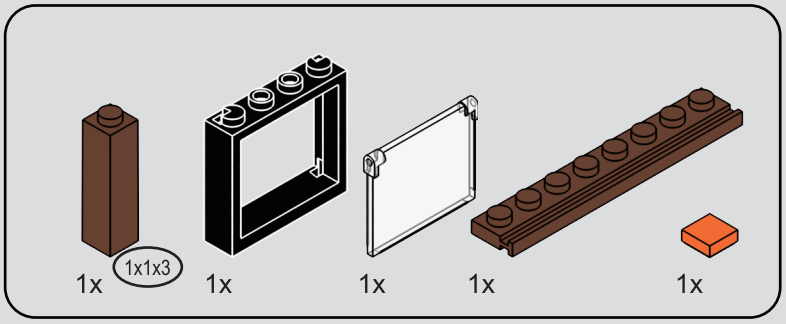

52

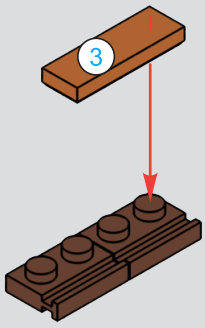

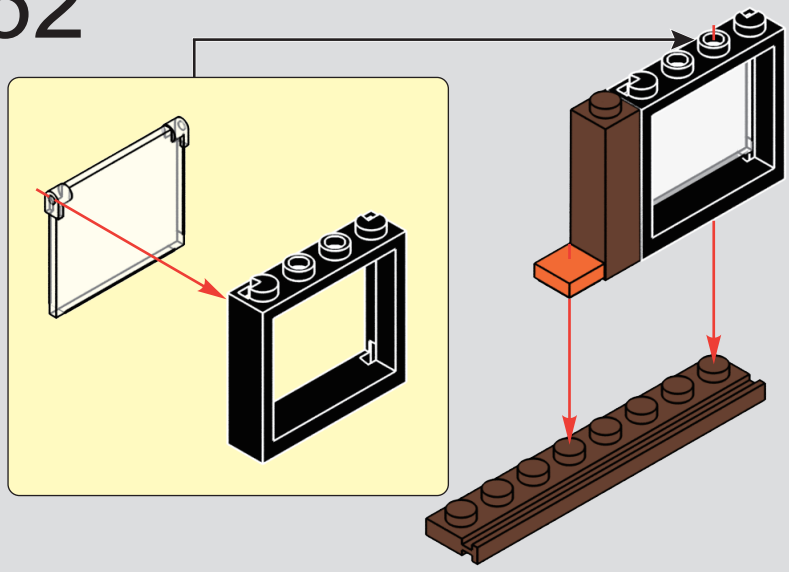

53

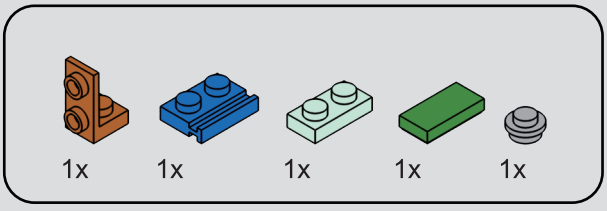

54

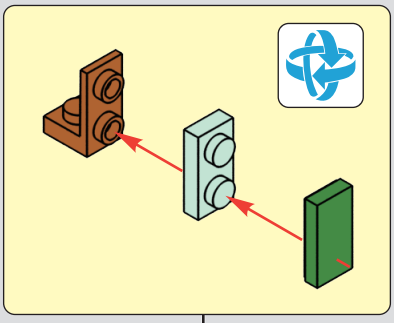

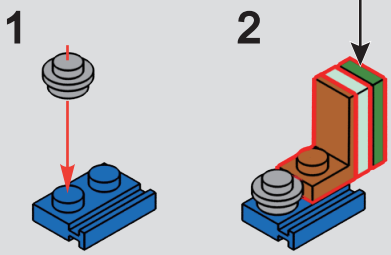

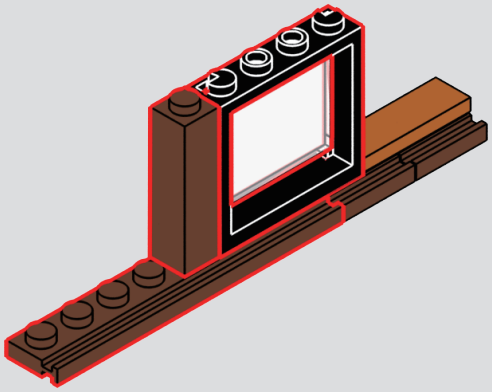

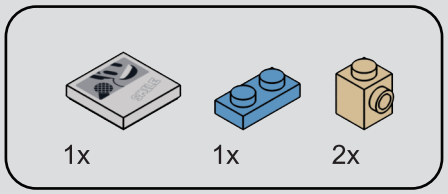

55

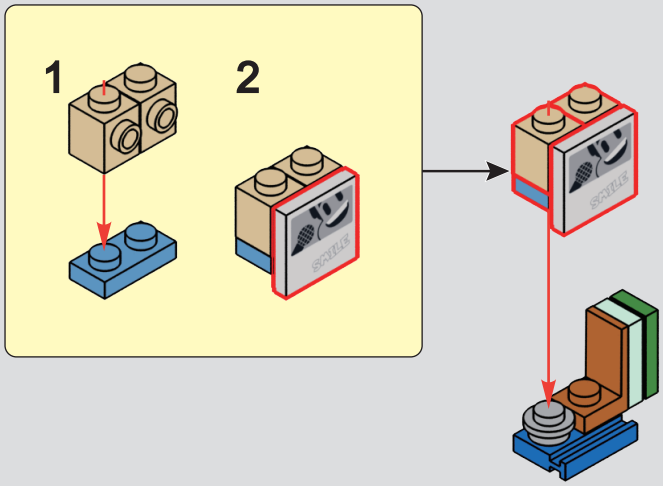

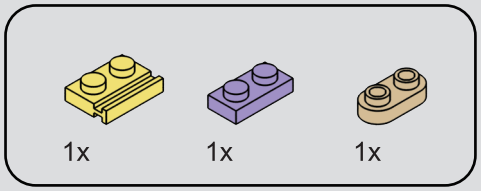

56

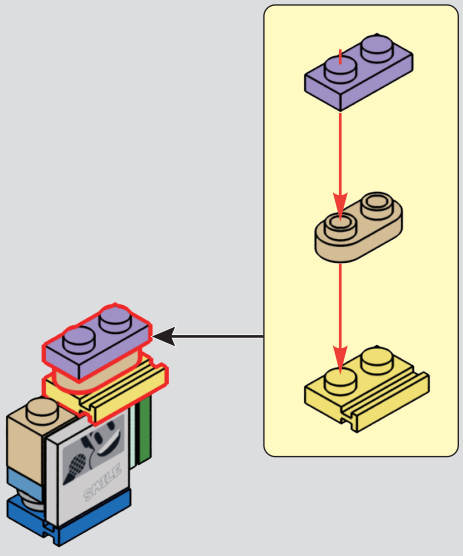

57

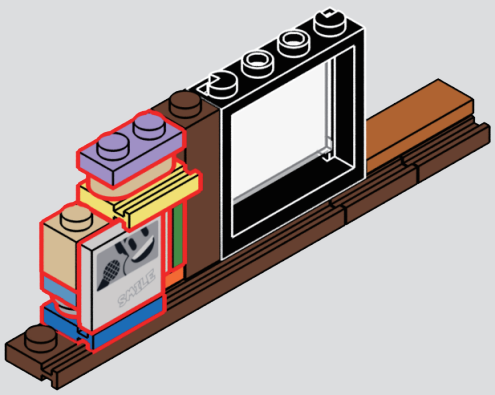

58

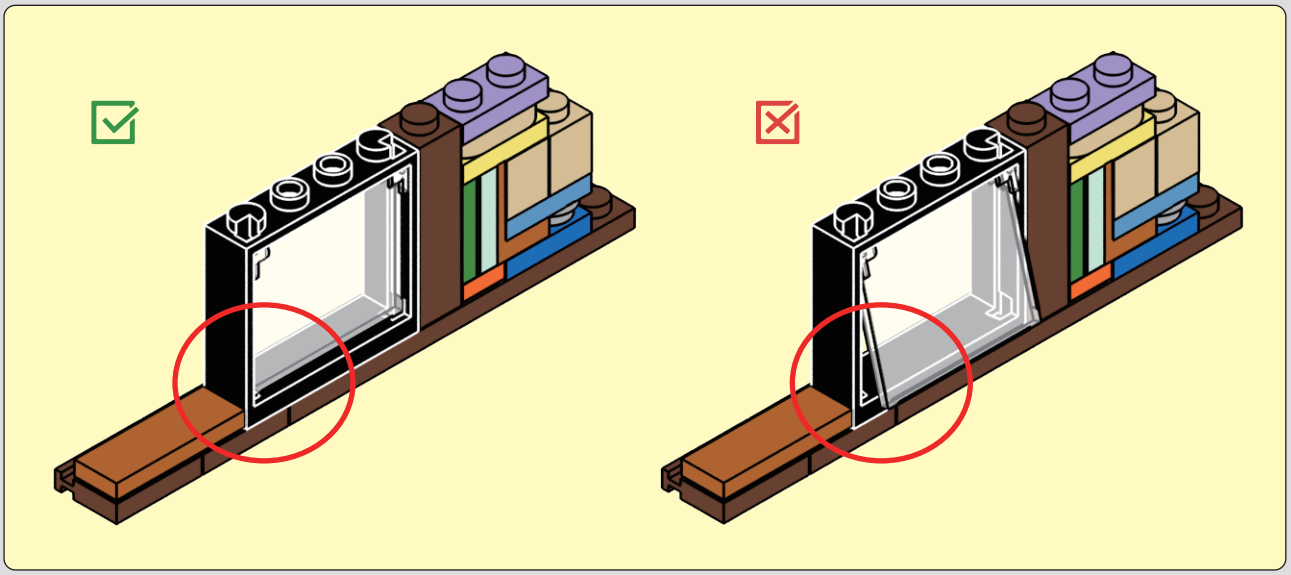

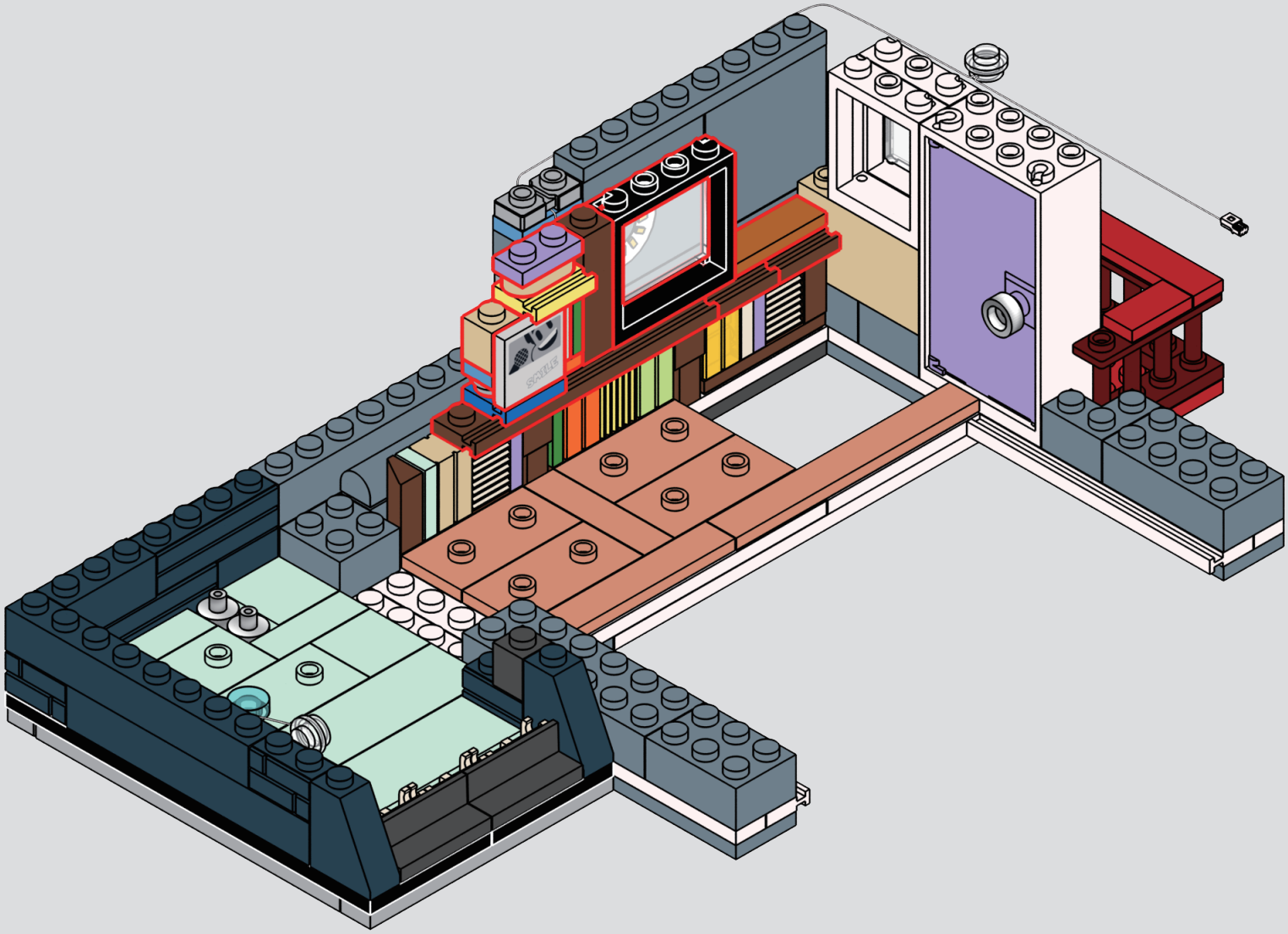

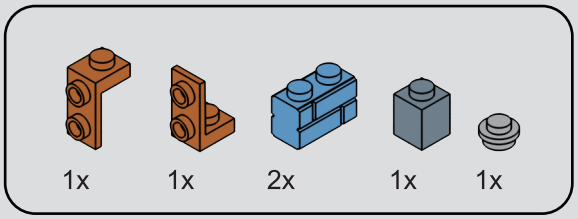

59

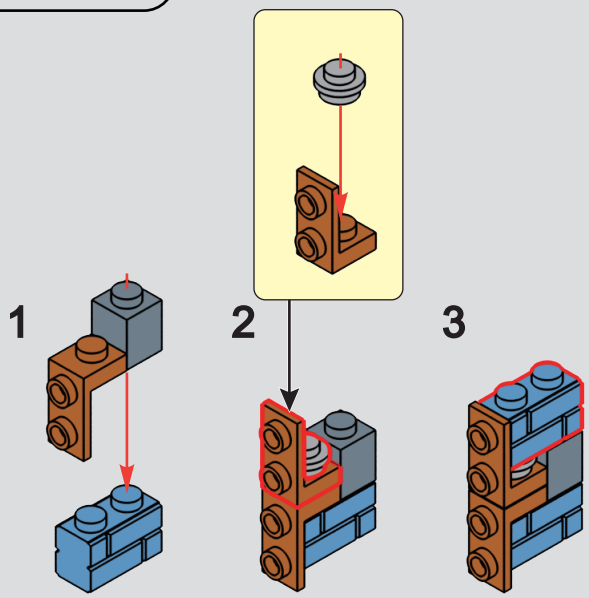

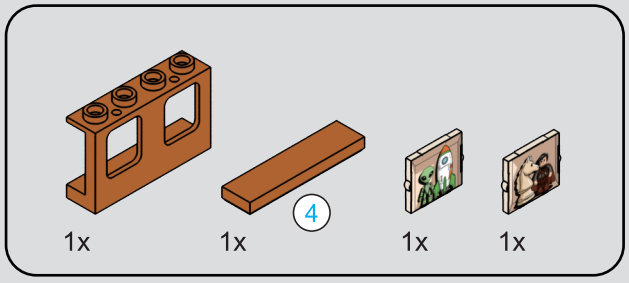



60

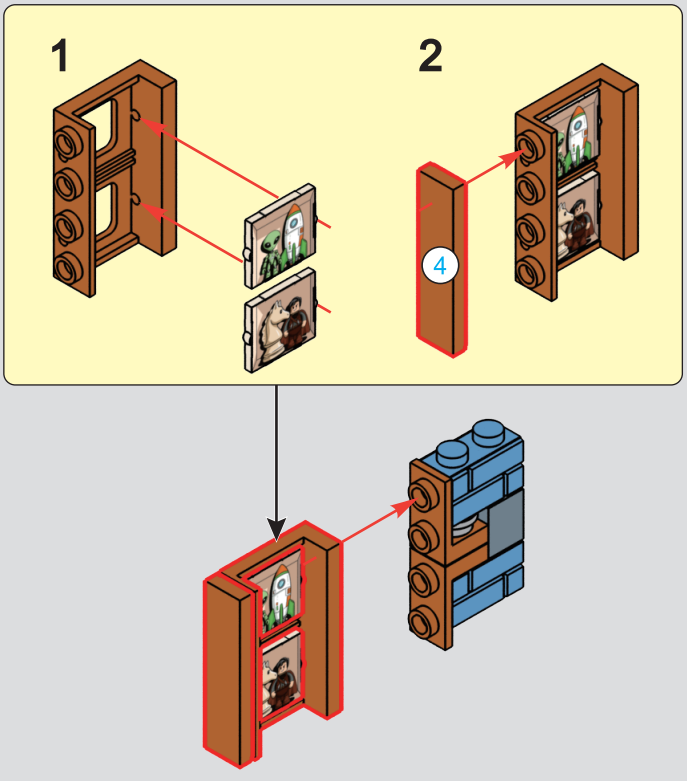

61

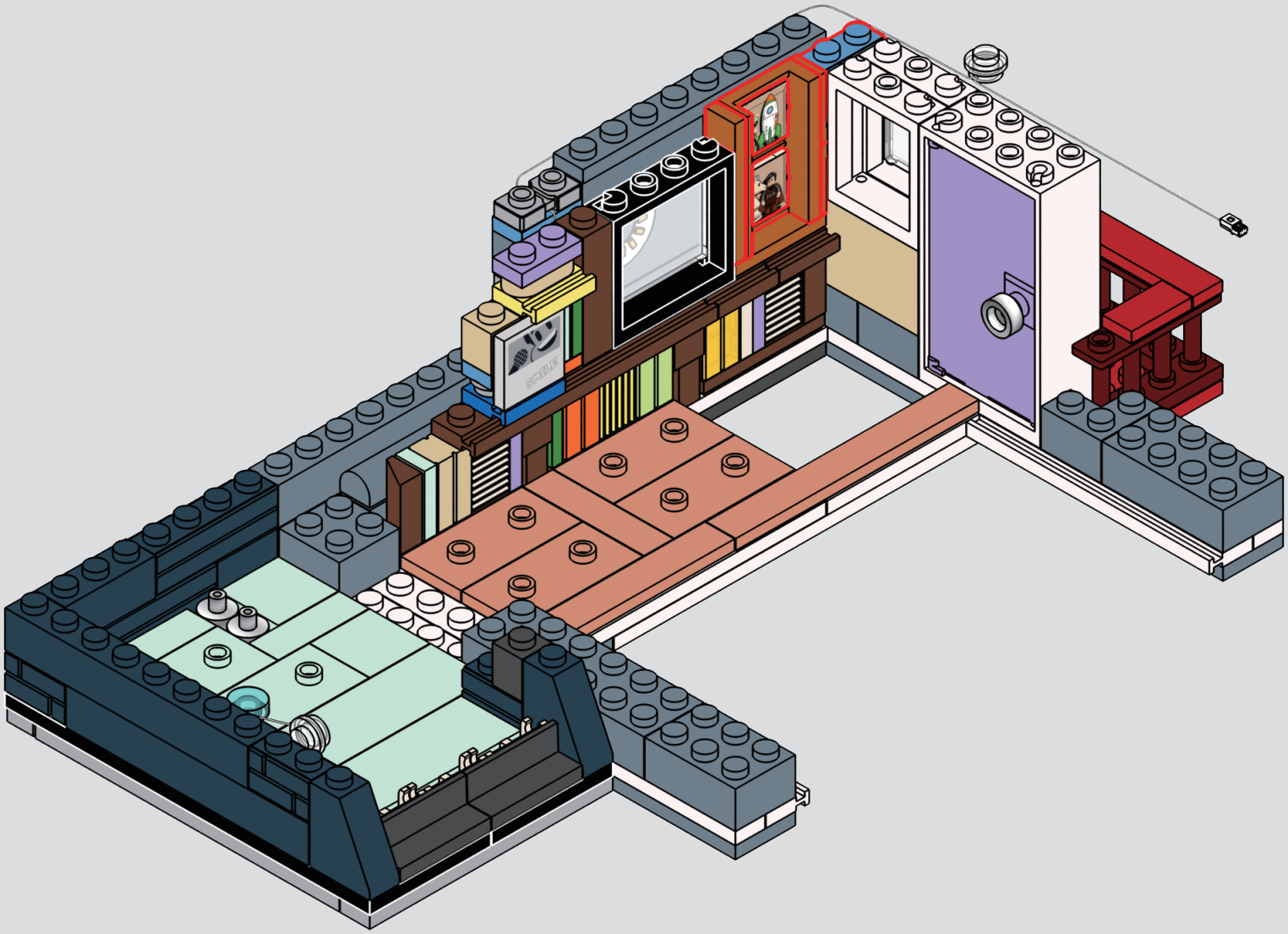

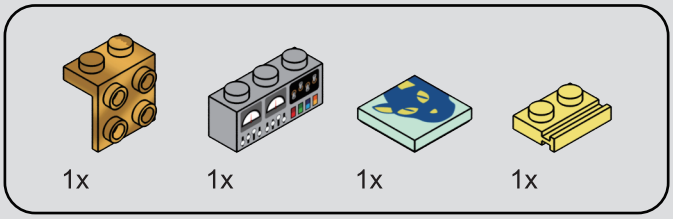

62

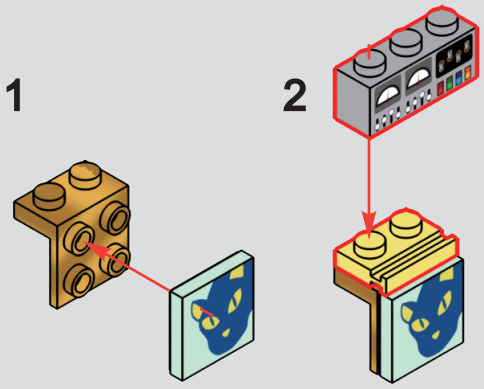

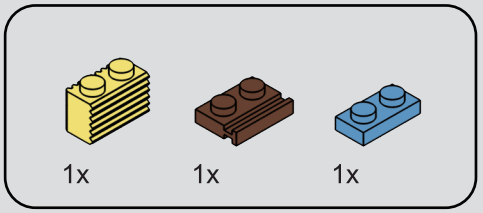

63

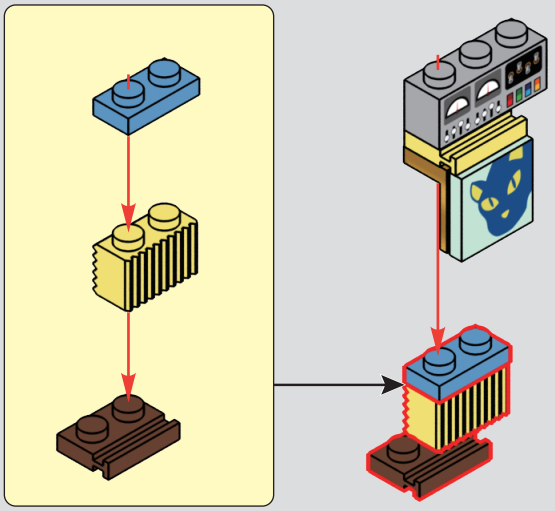

64

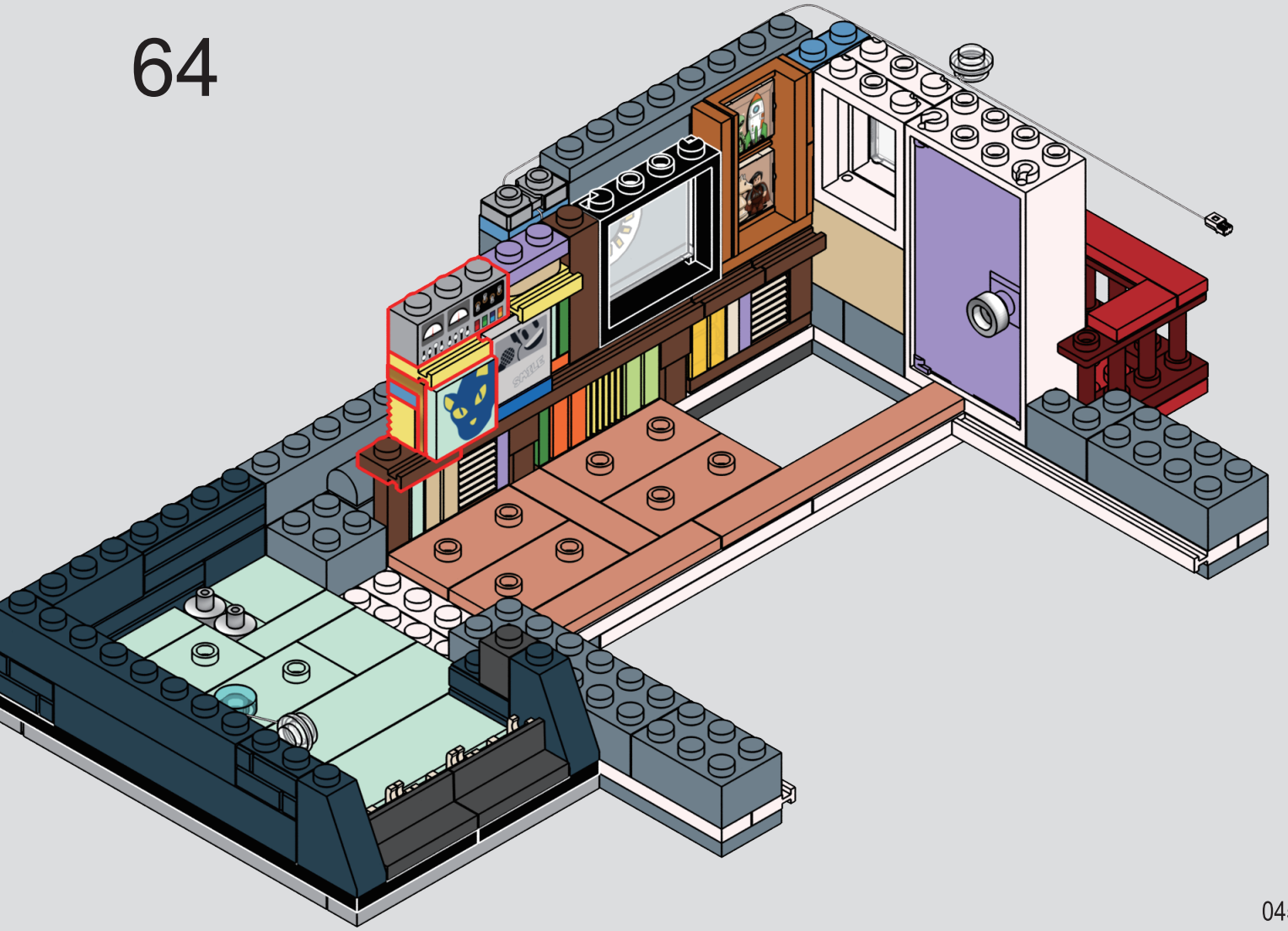

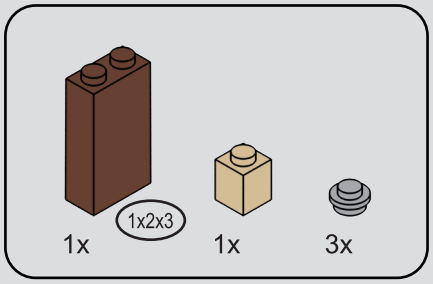

65

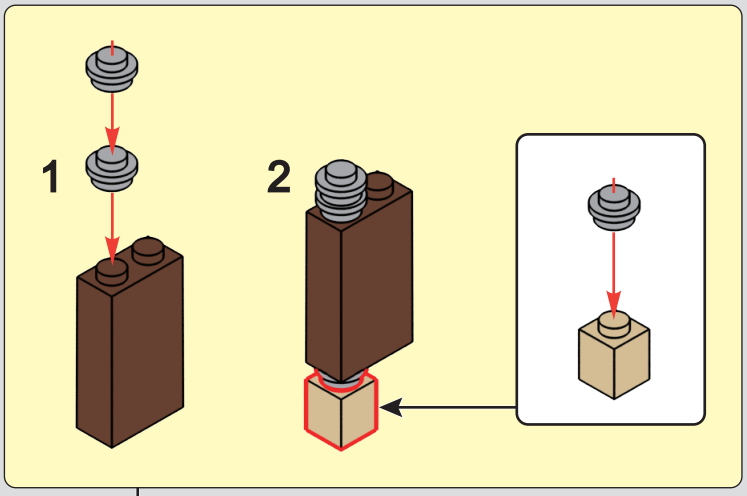

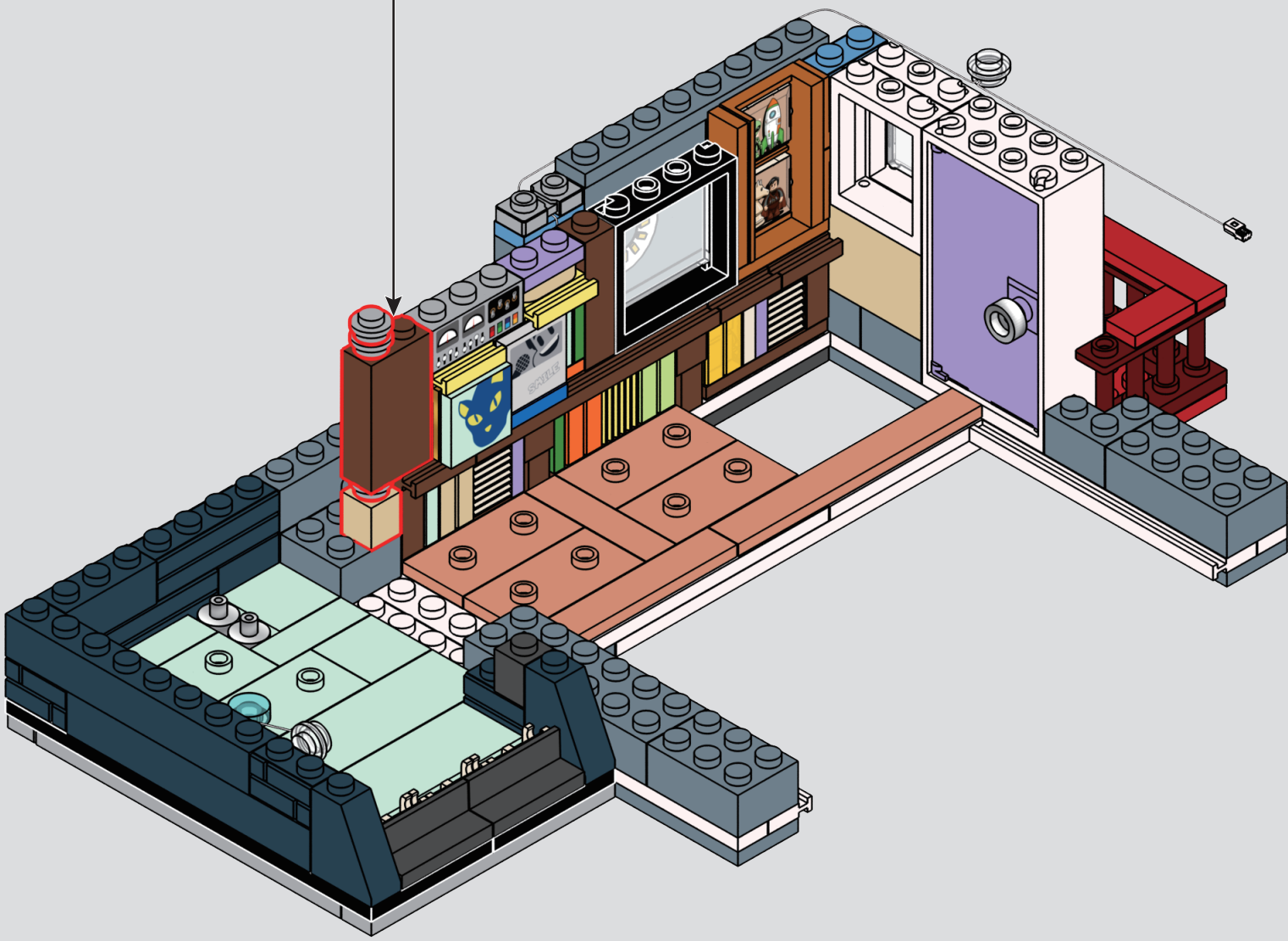

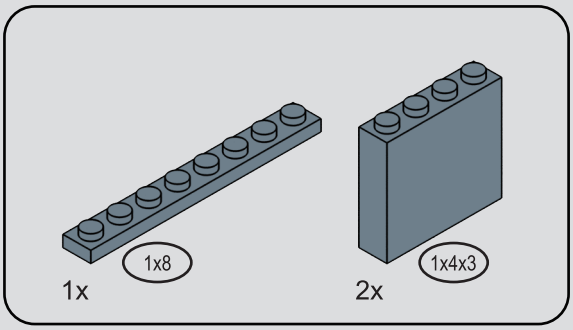

66

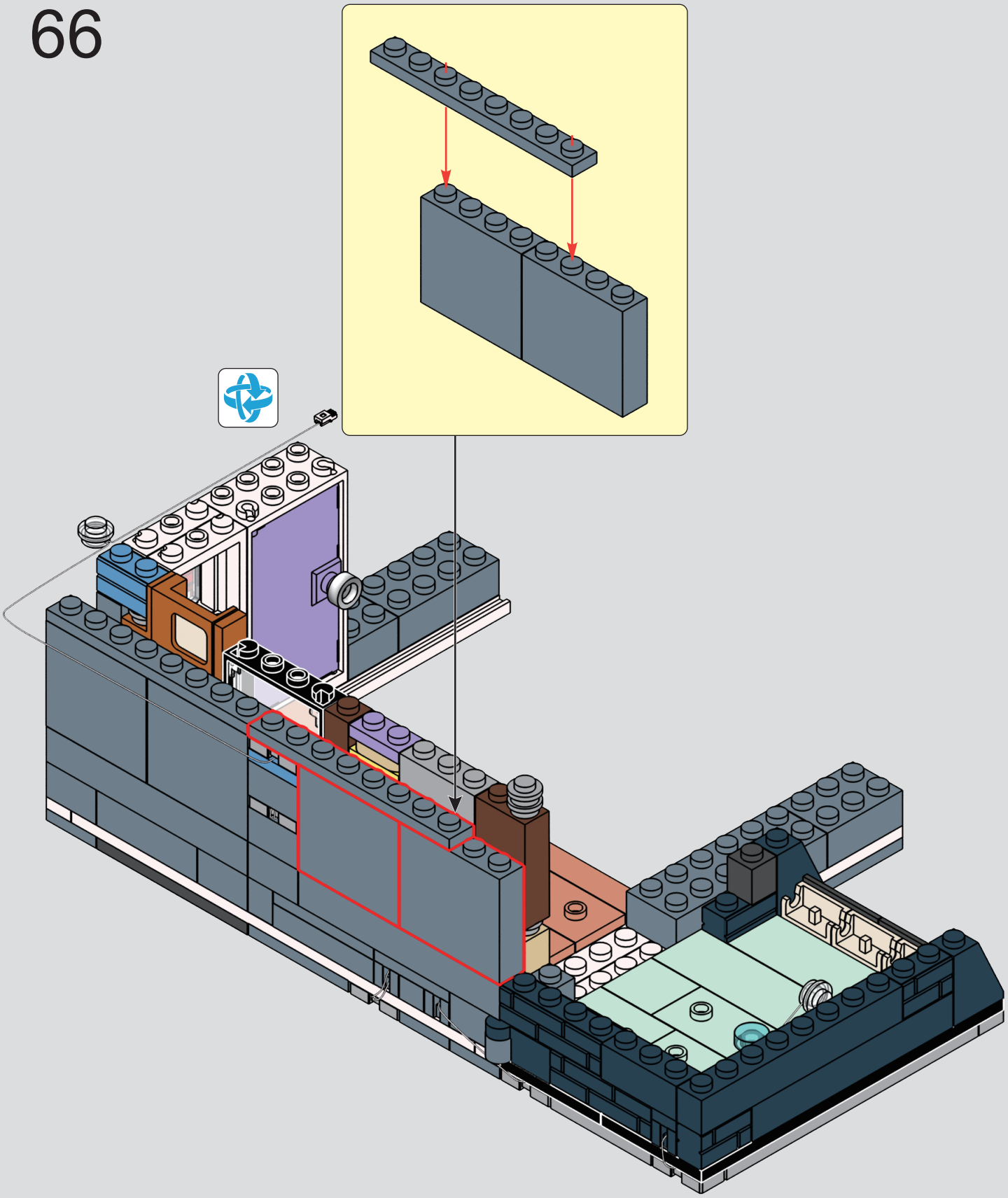

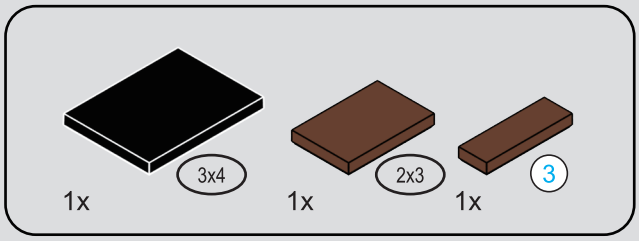

67

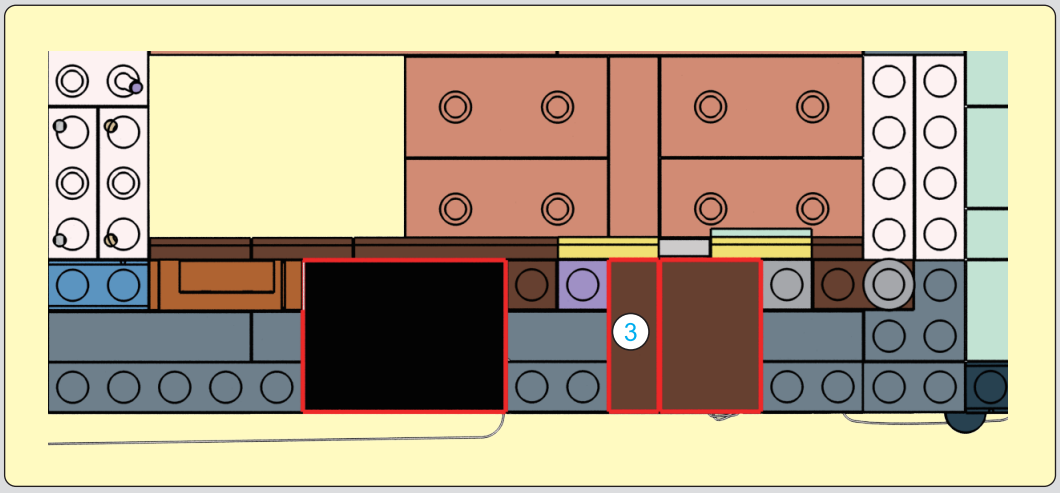

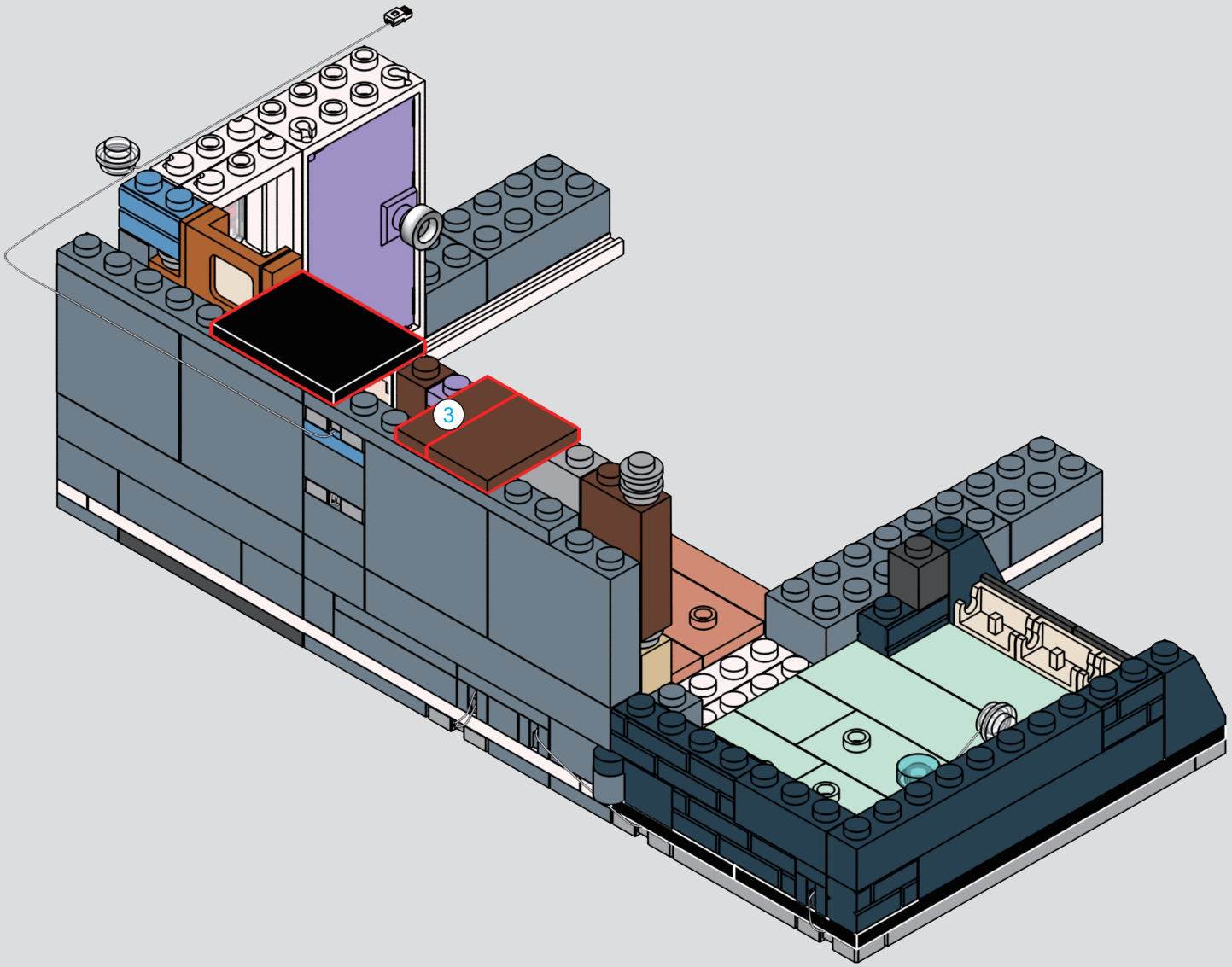

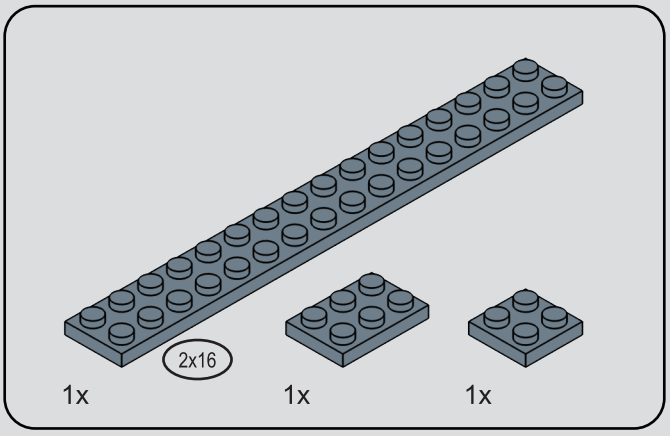

68

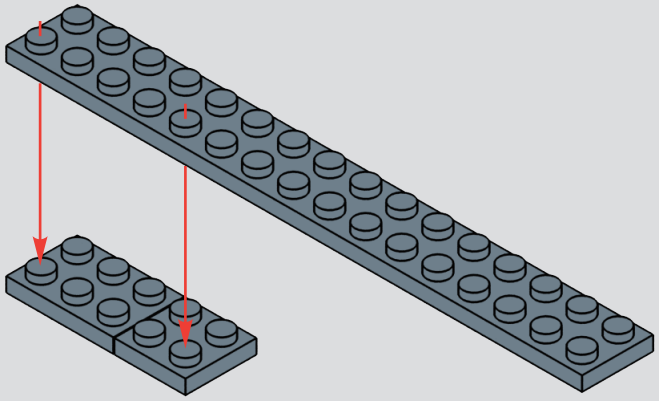

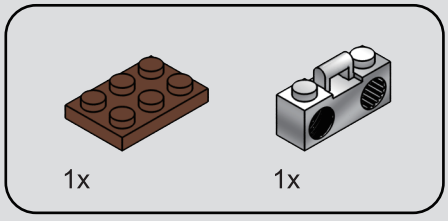

69

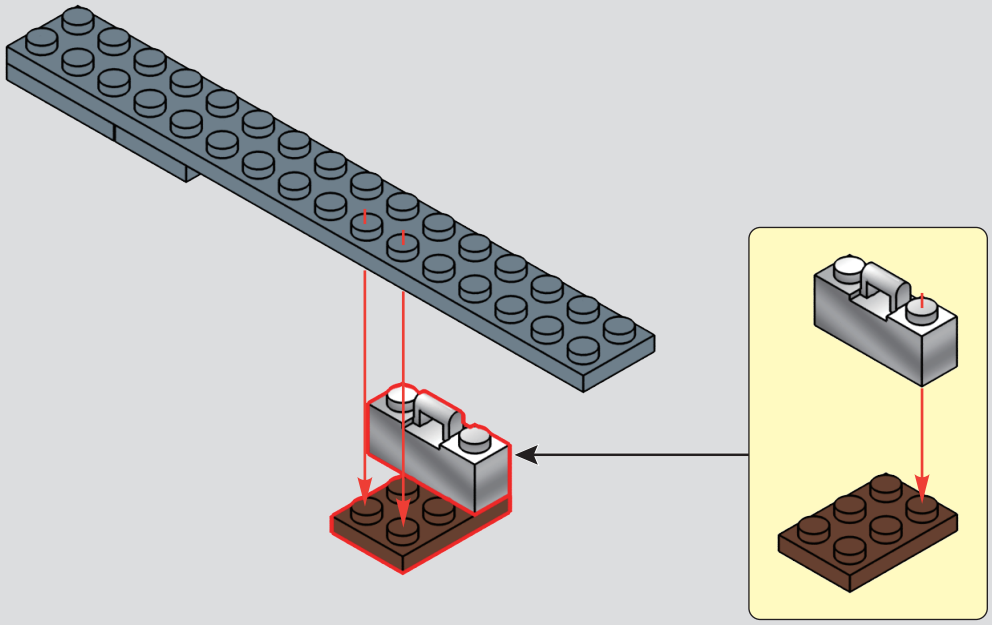

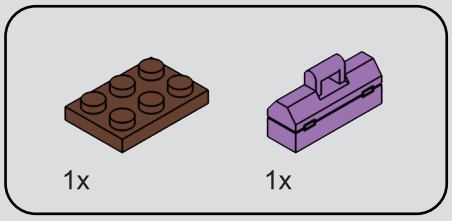

70

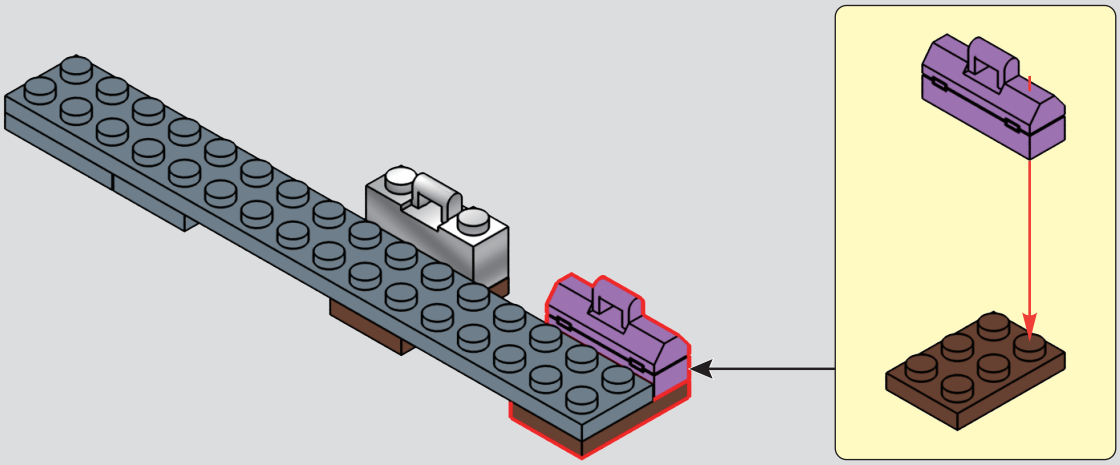

71

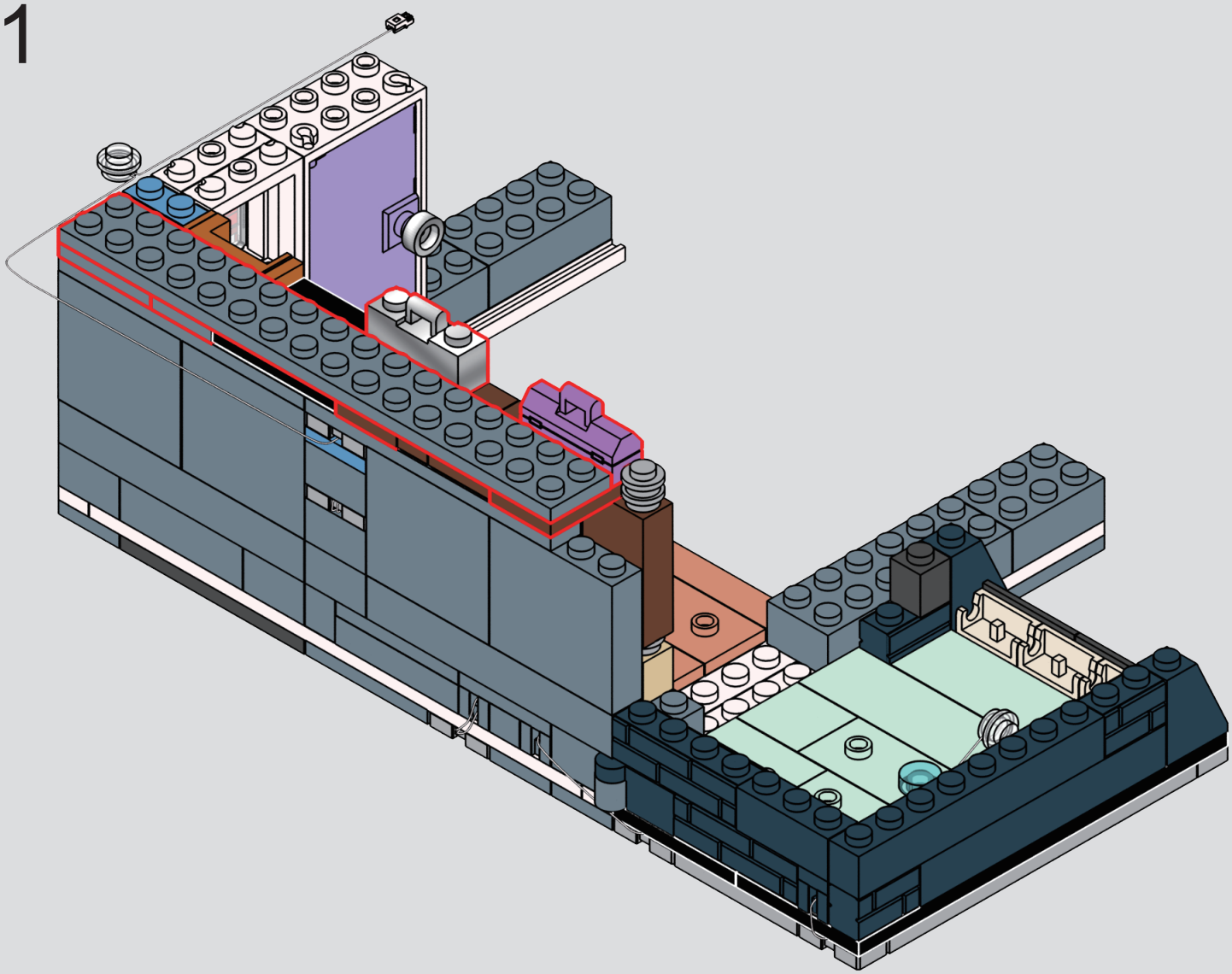

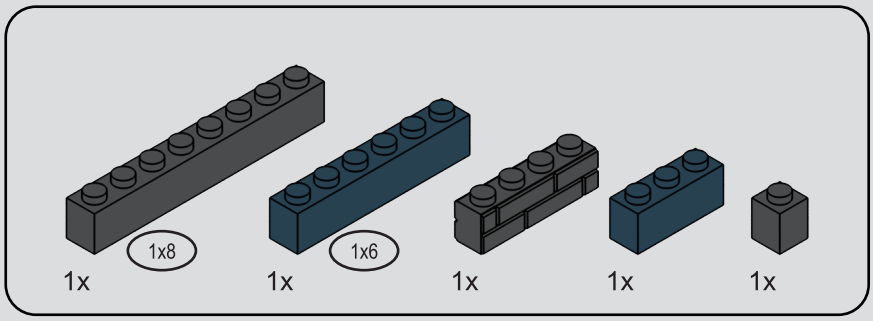

72

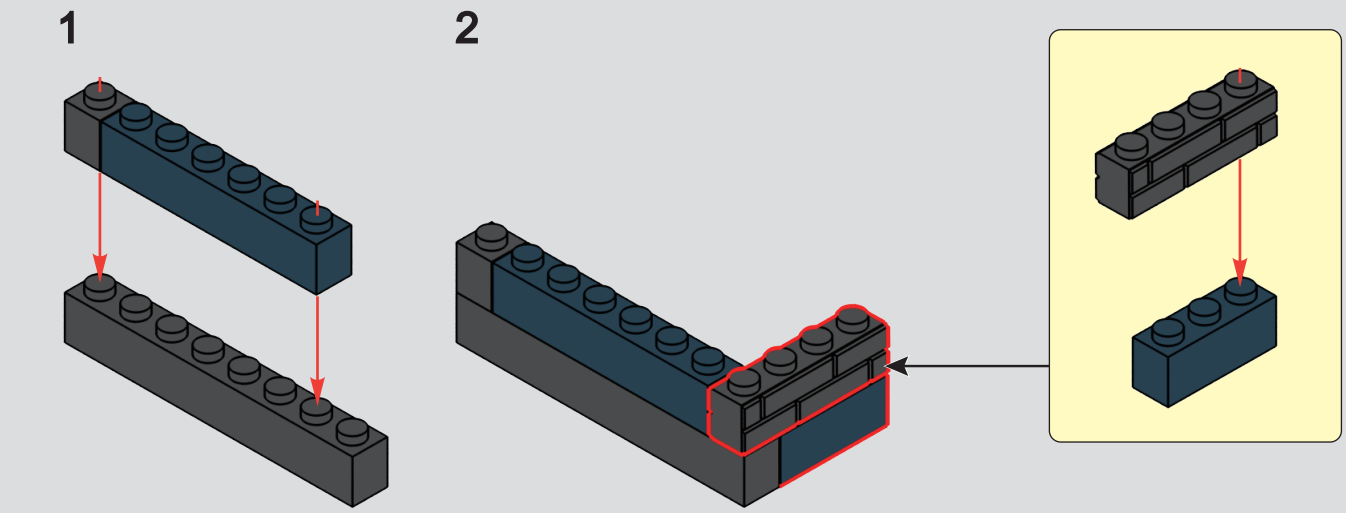

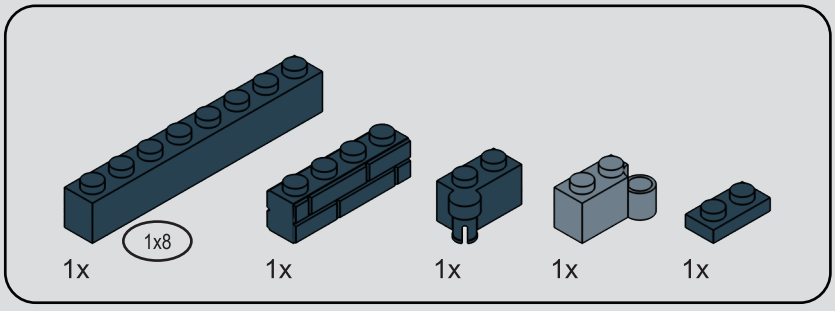

73

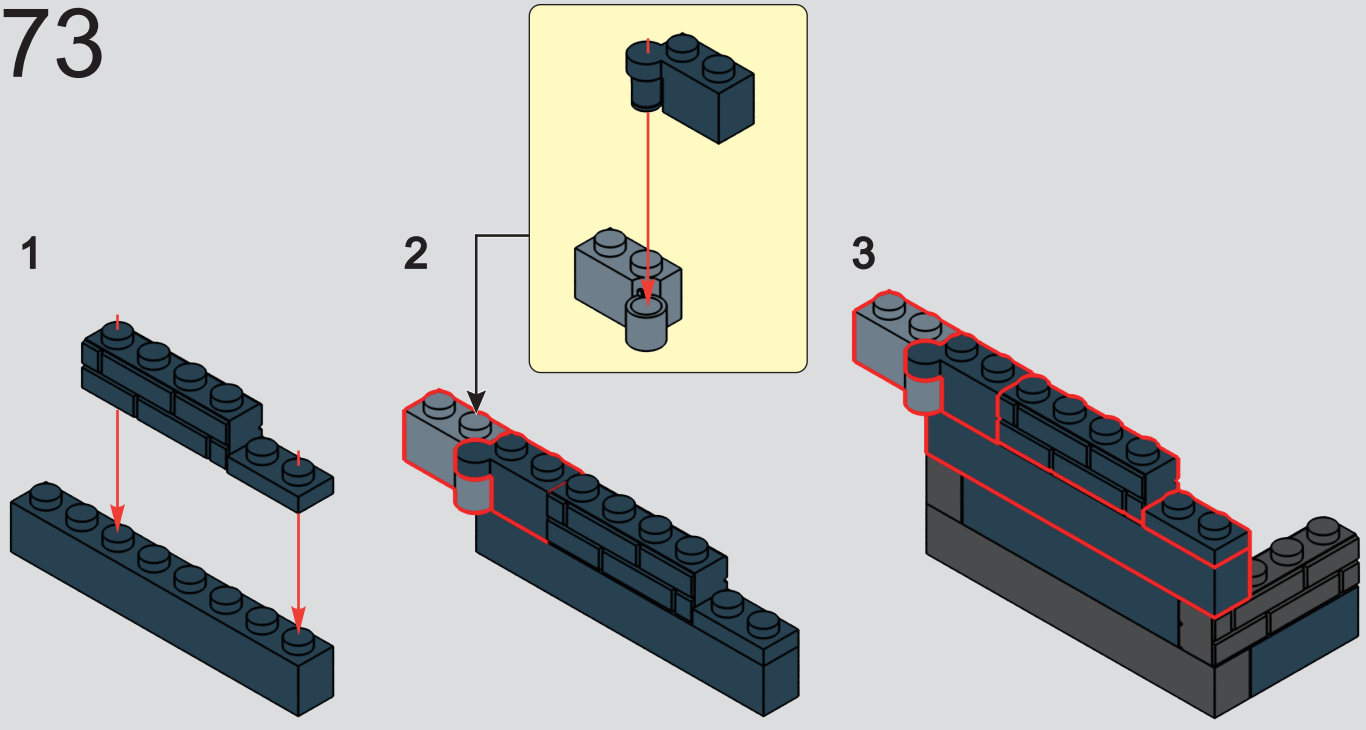

74

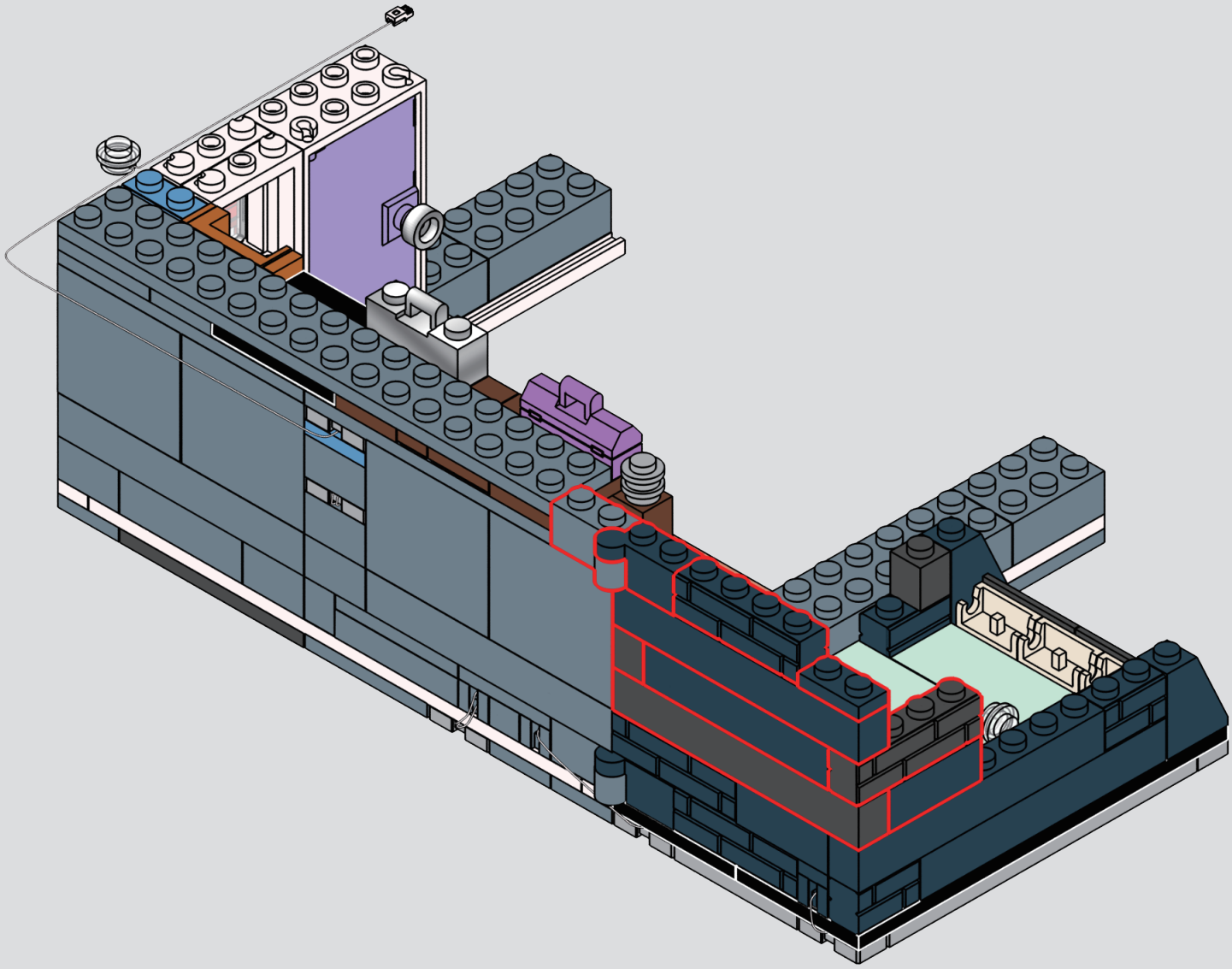

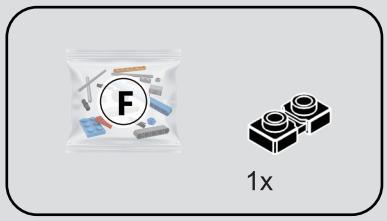

75

1

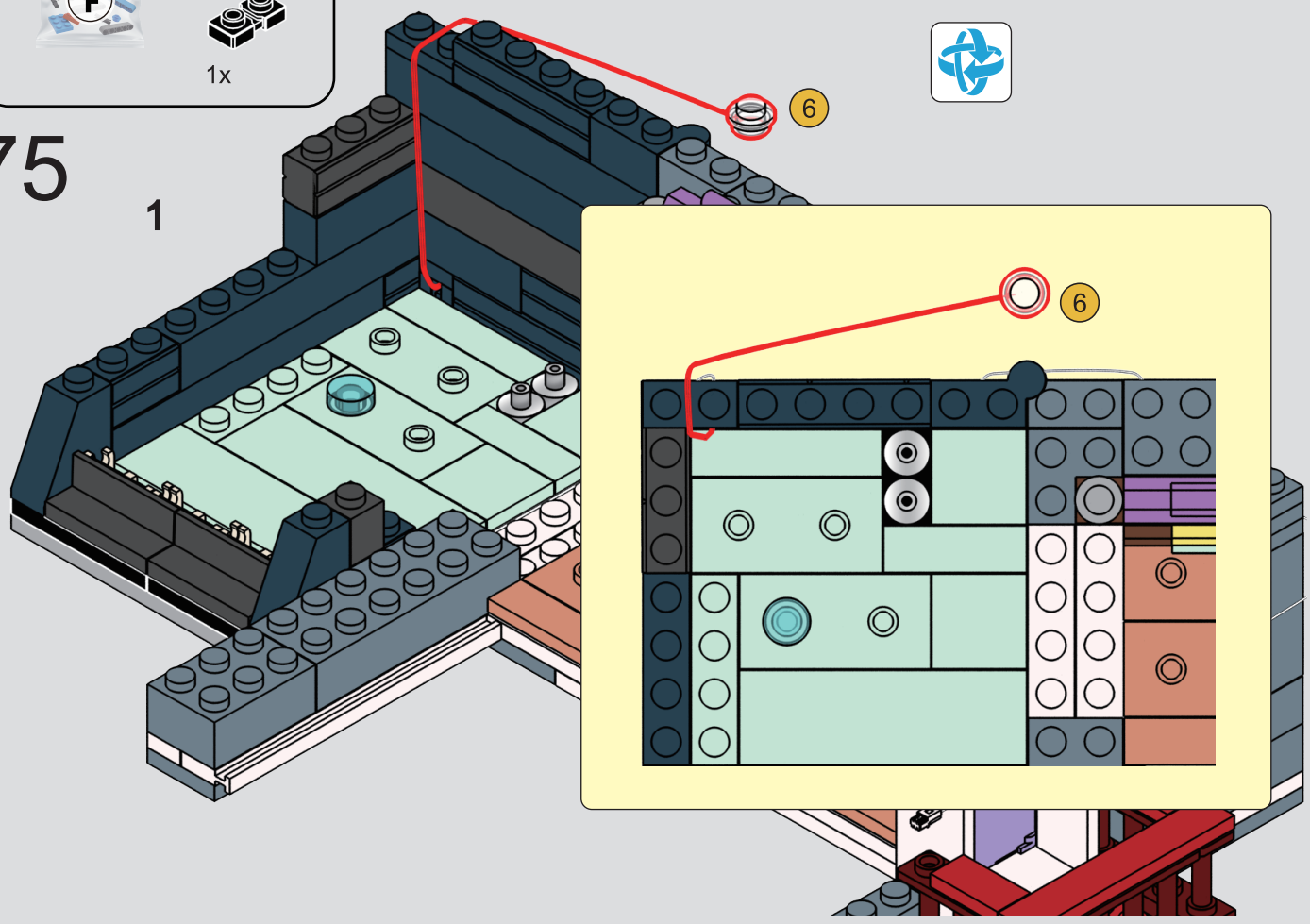

2

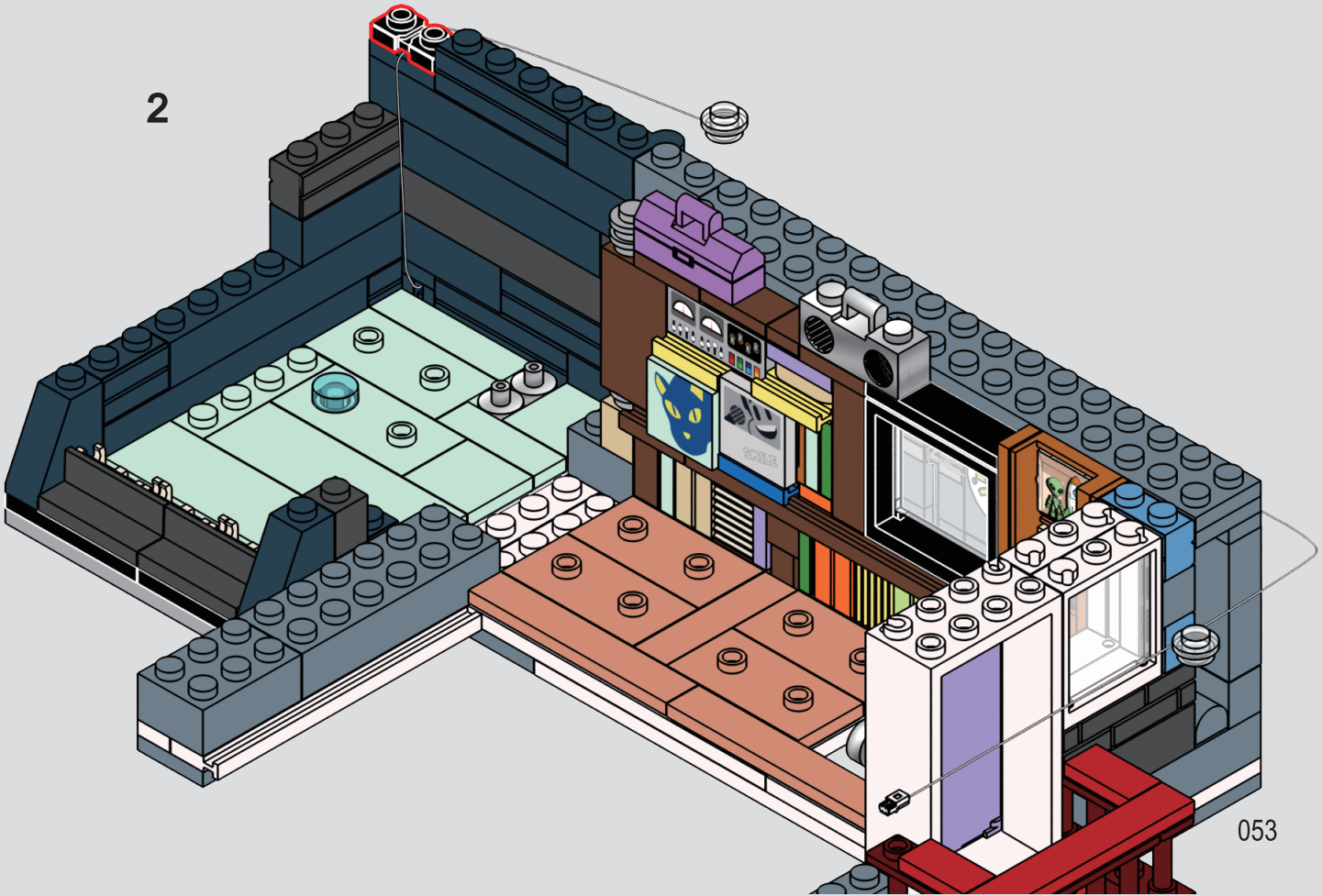

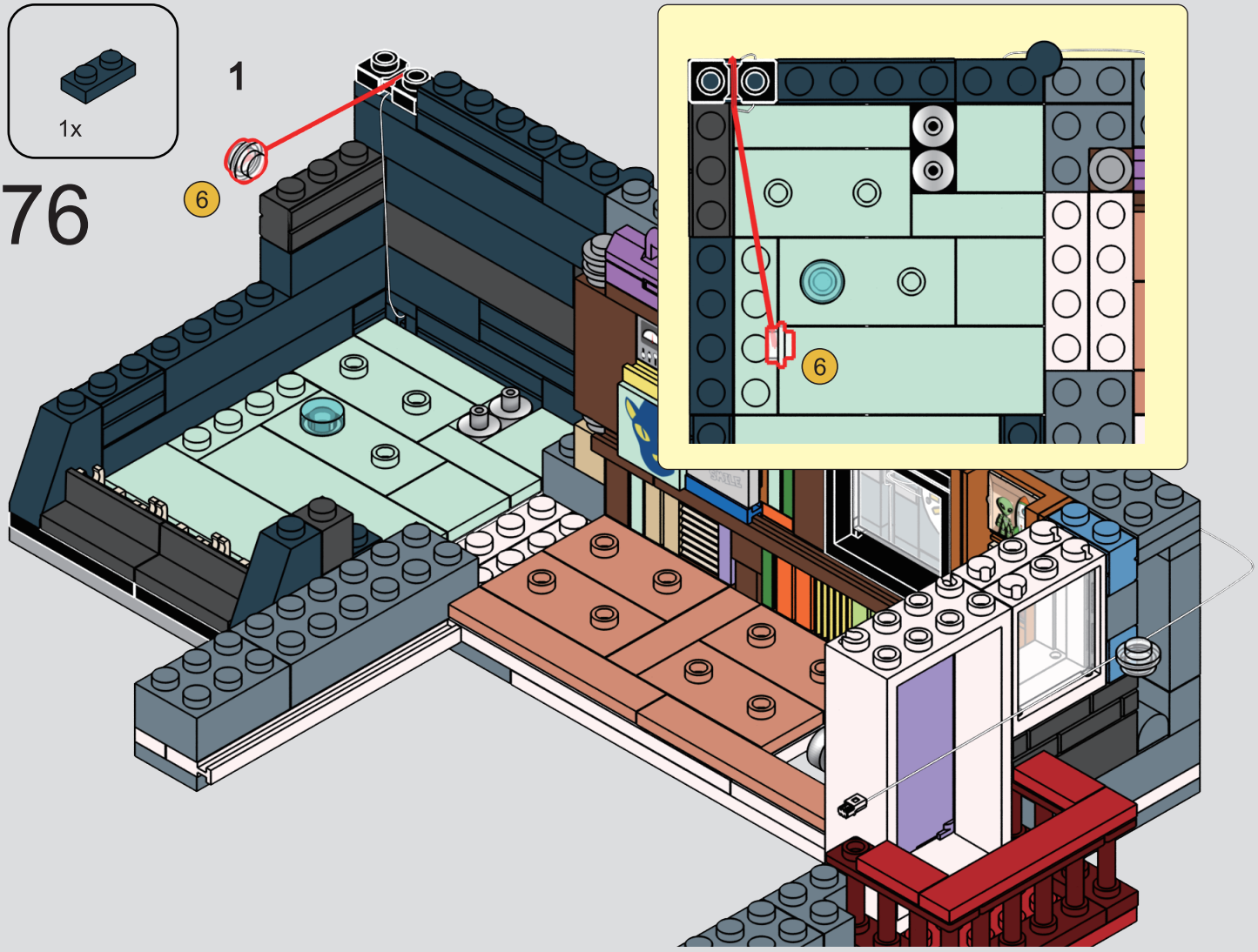
1x
76
1
6
6

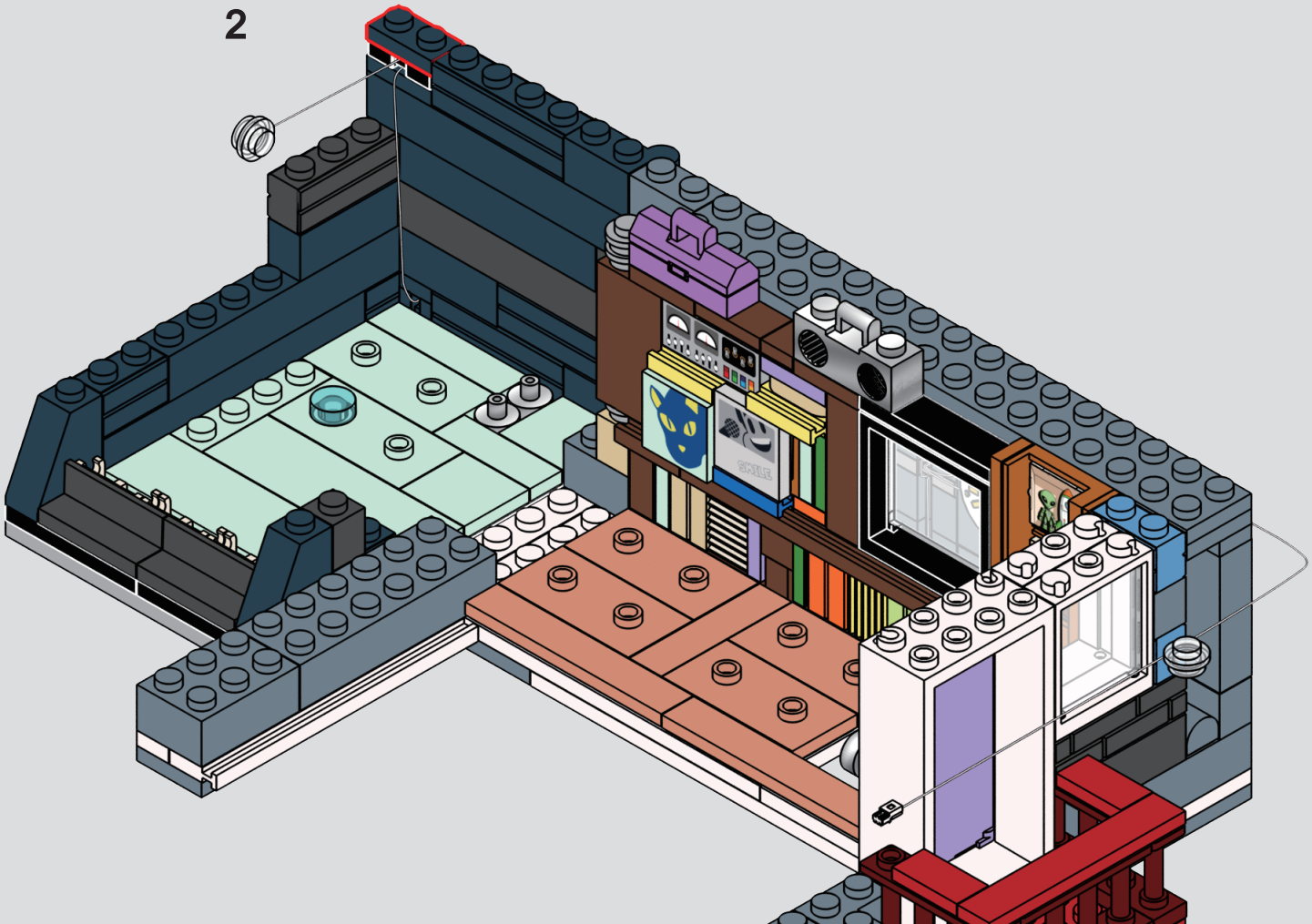
2

77

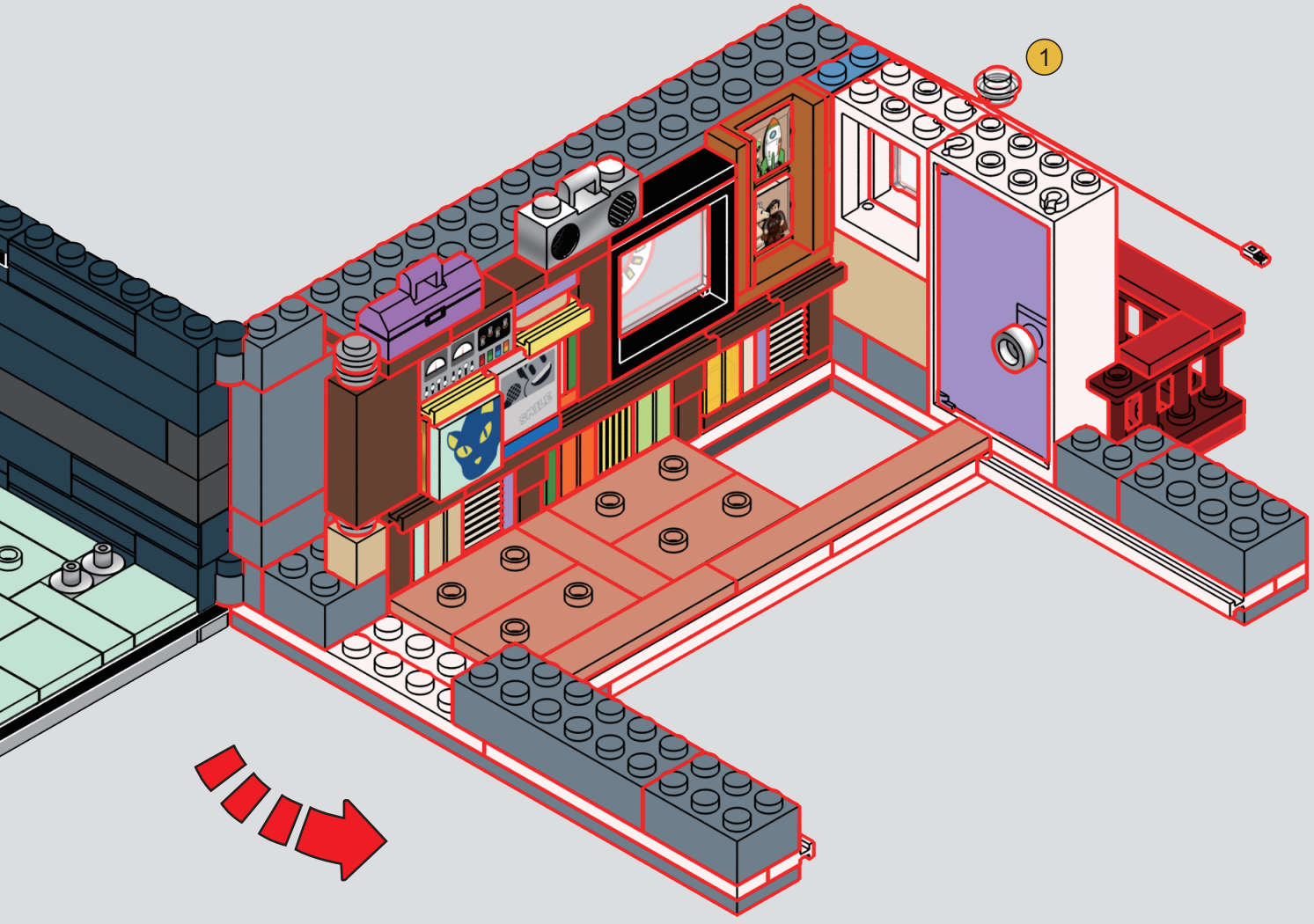

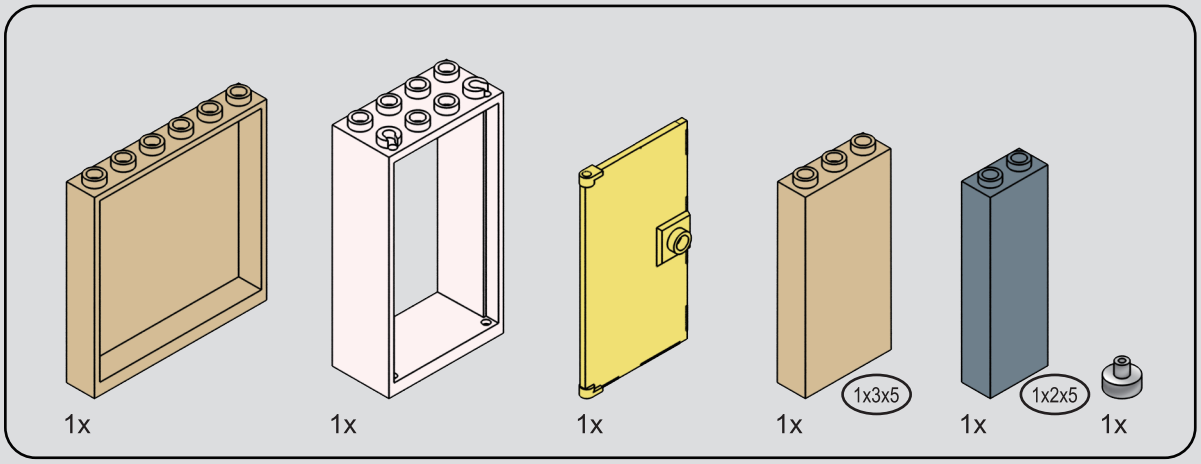

78

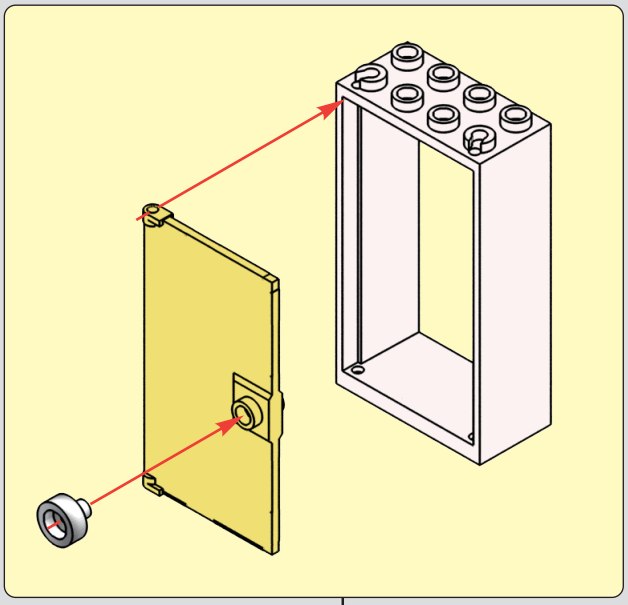

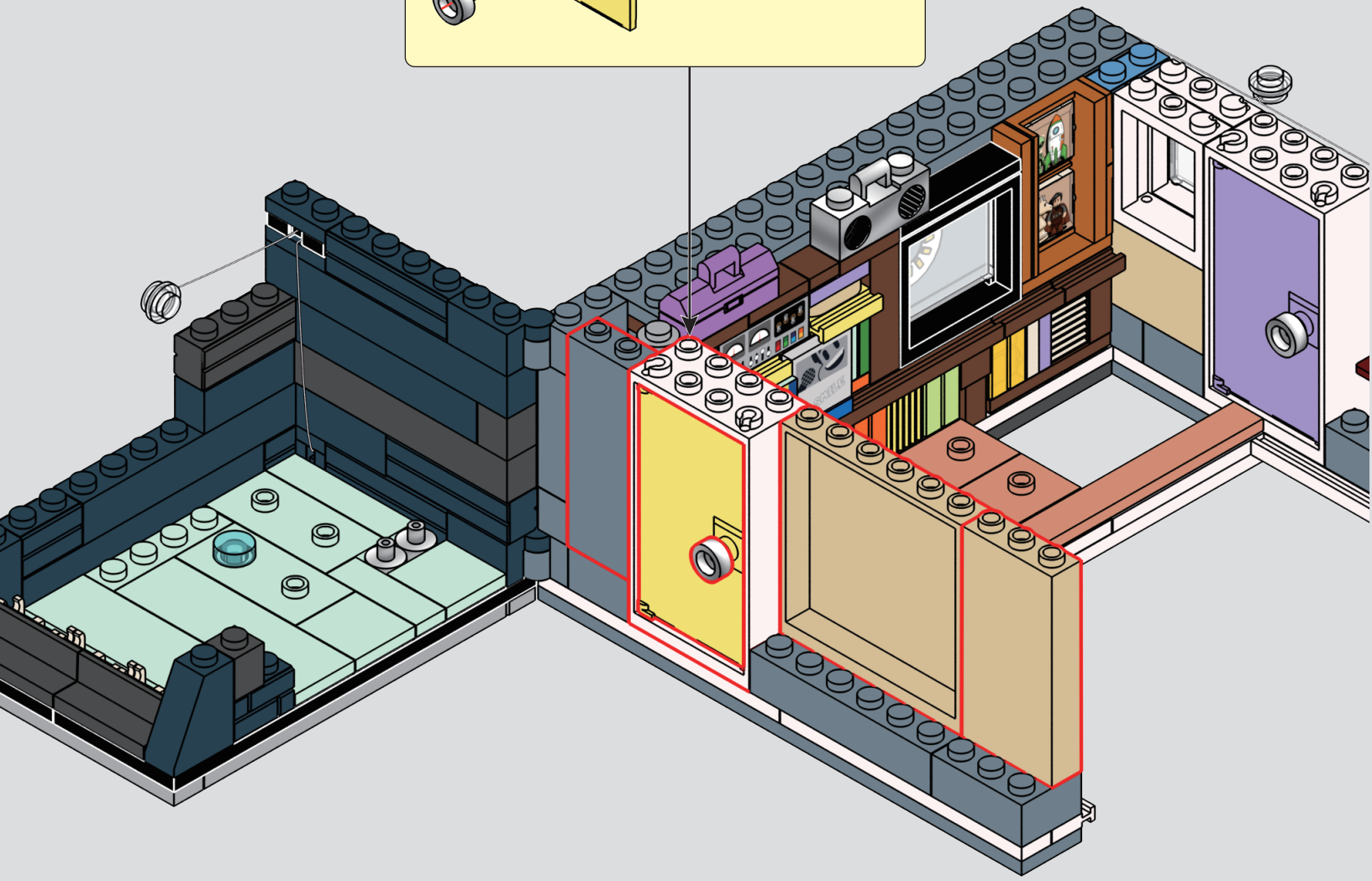

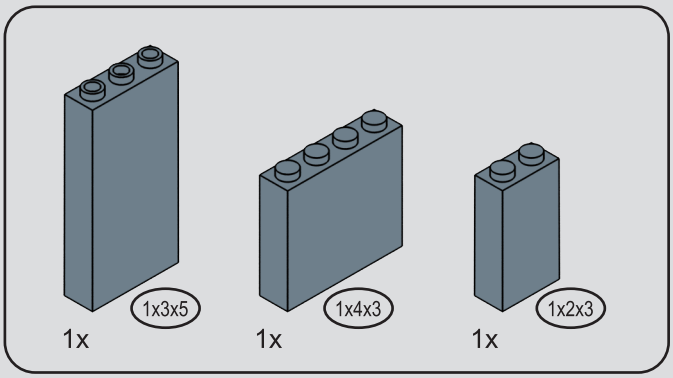

79

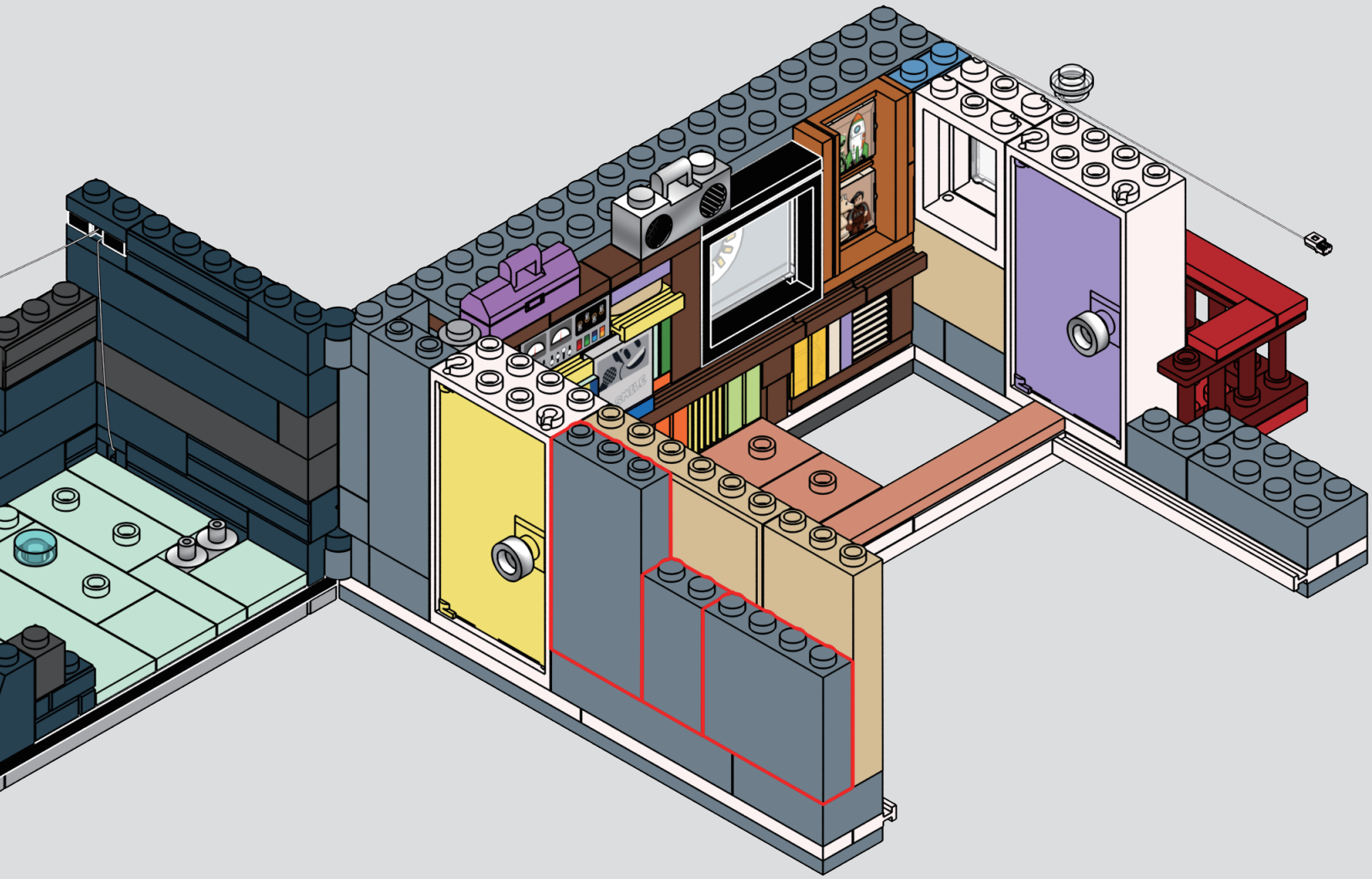

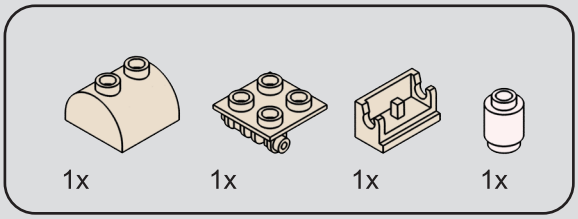

80

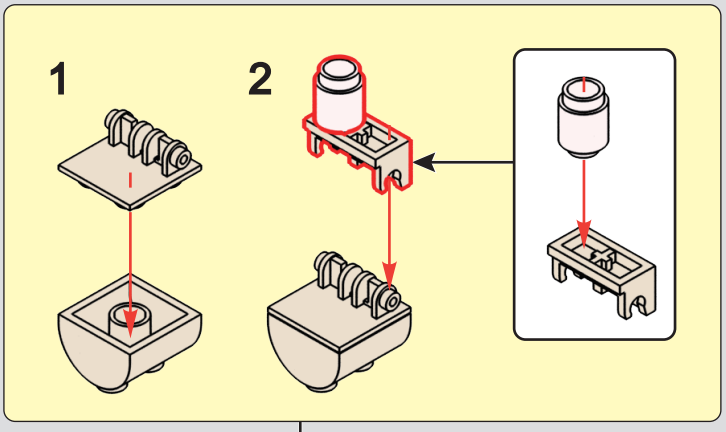

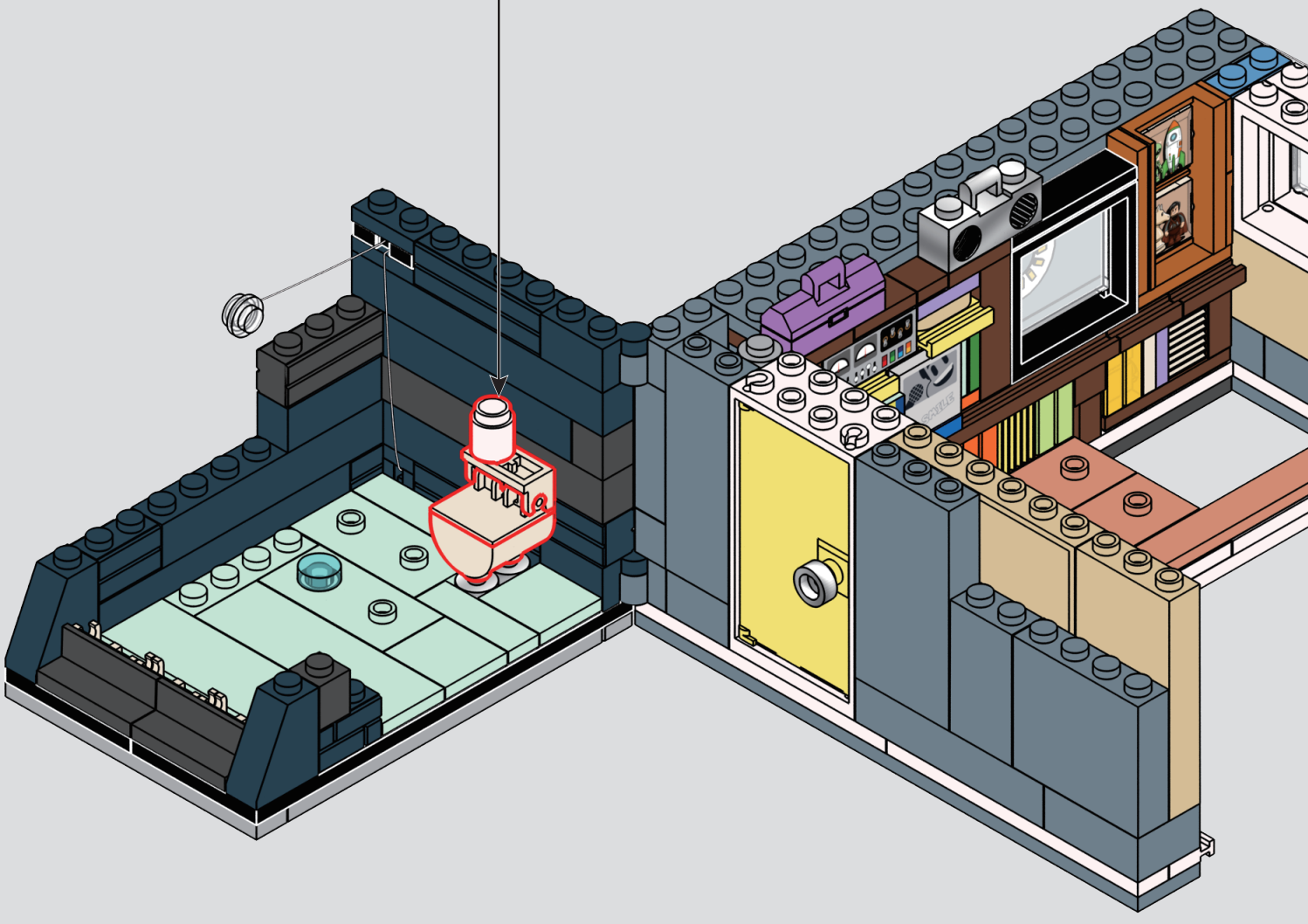

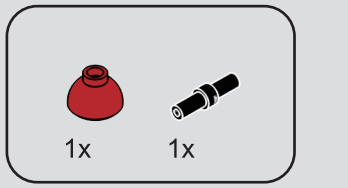

81

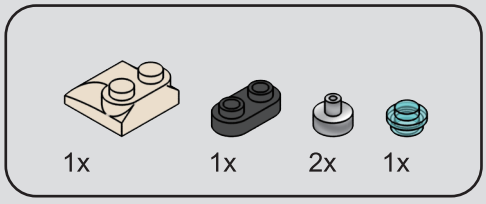

82

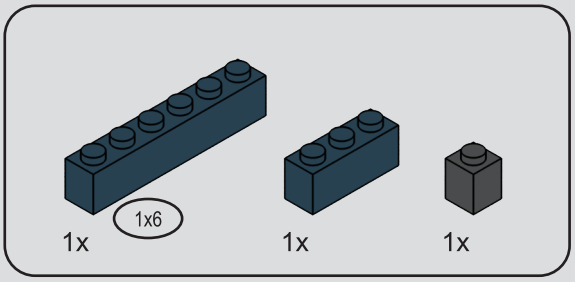

83

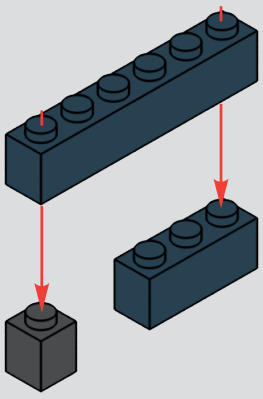

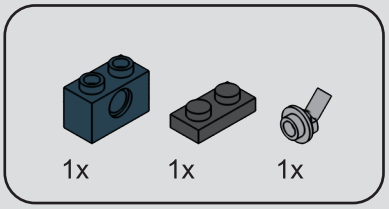

84

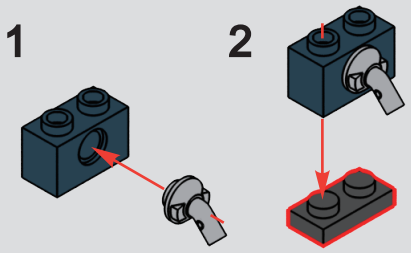

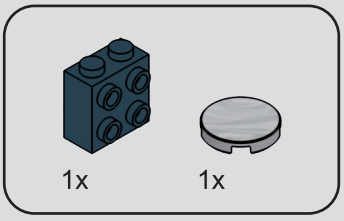

85

86

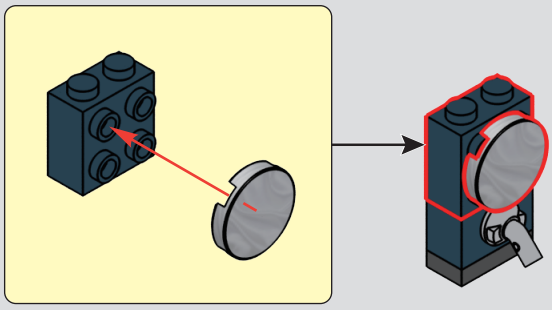

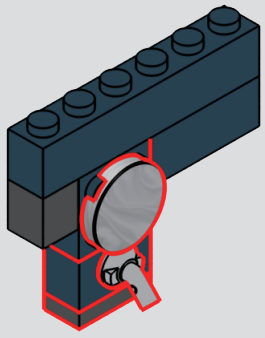

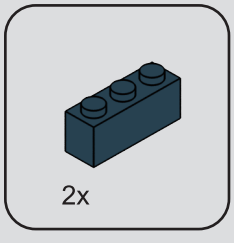

87

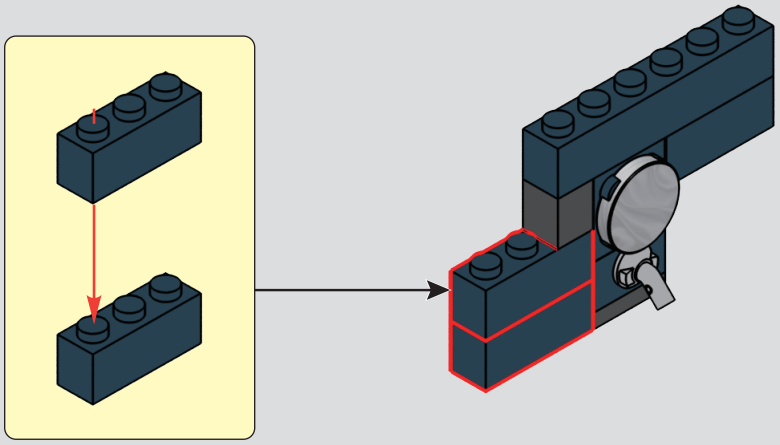

88

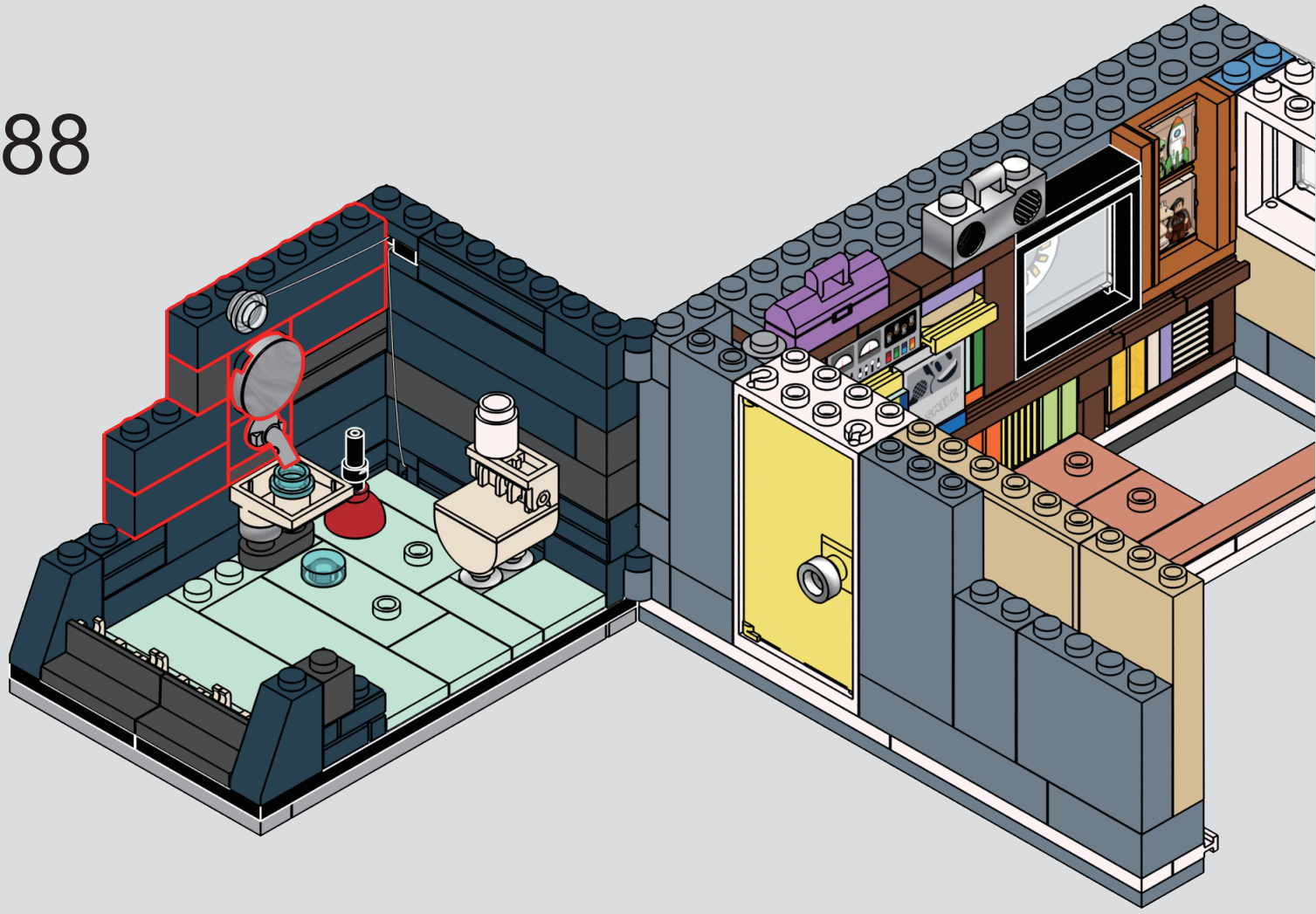

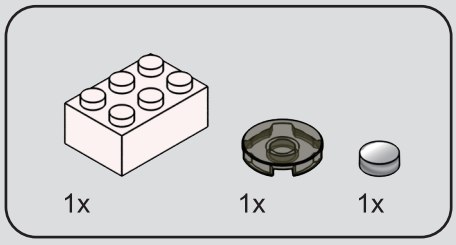

89

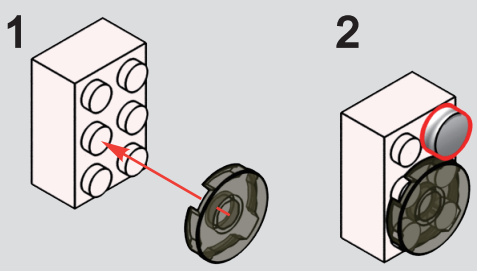

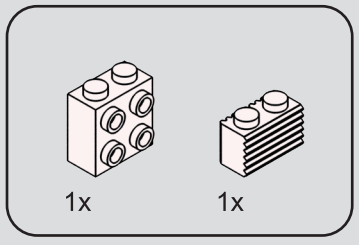

90

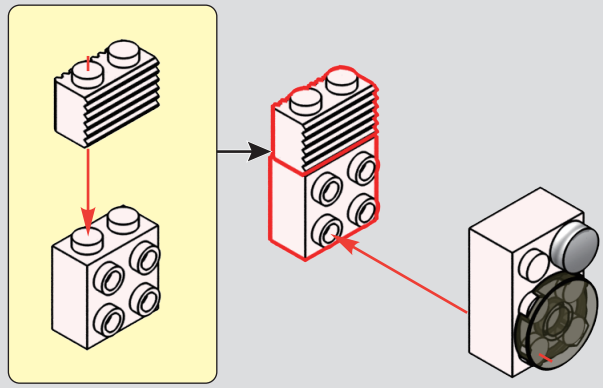

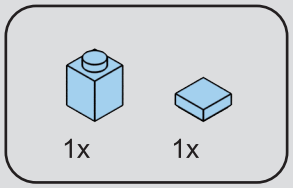

91

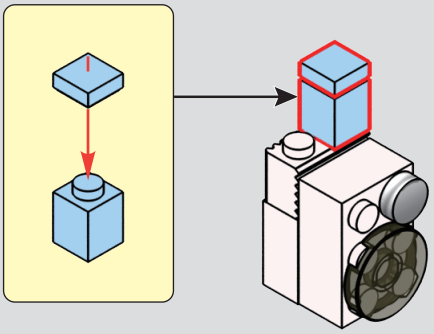

92

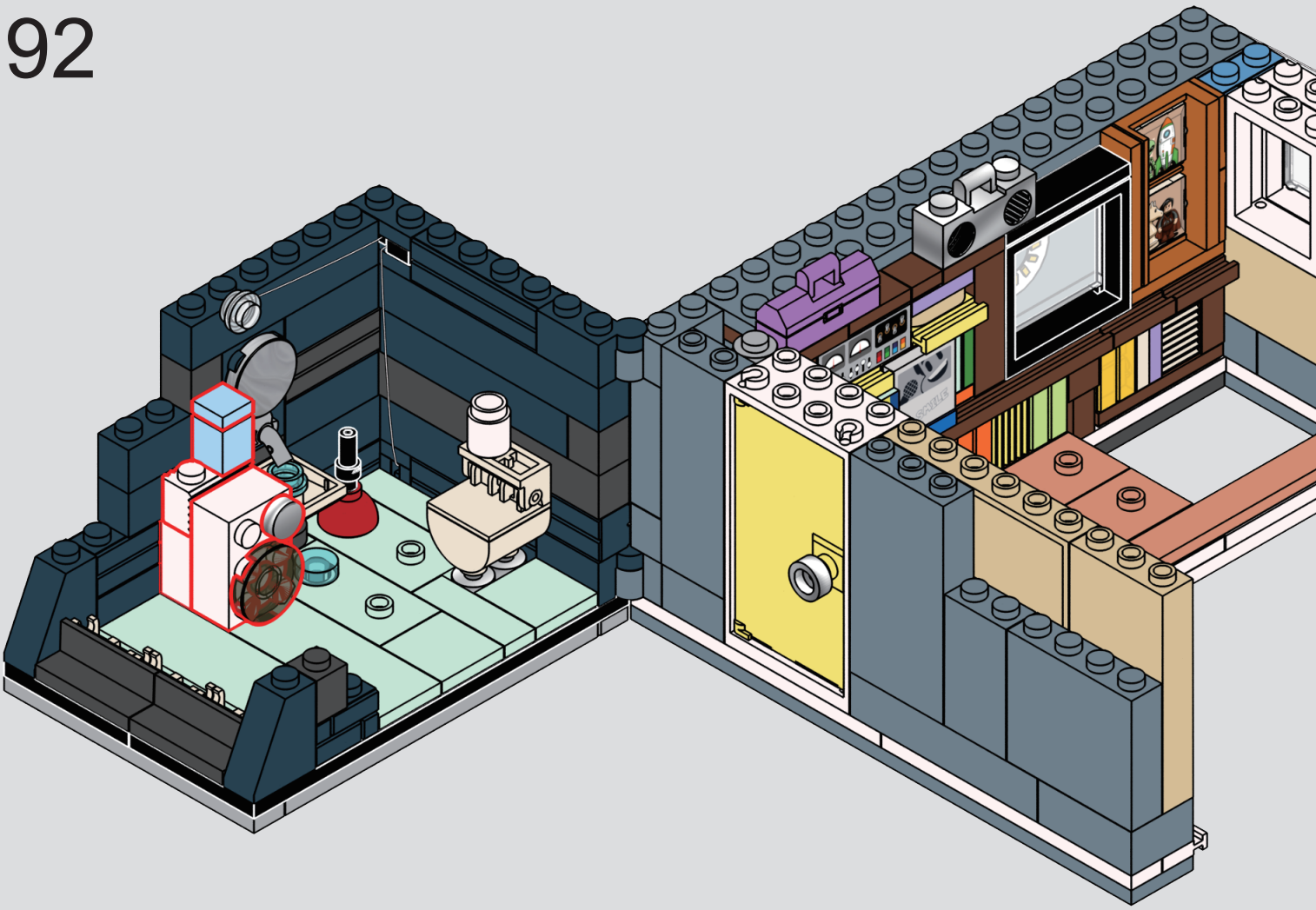

93

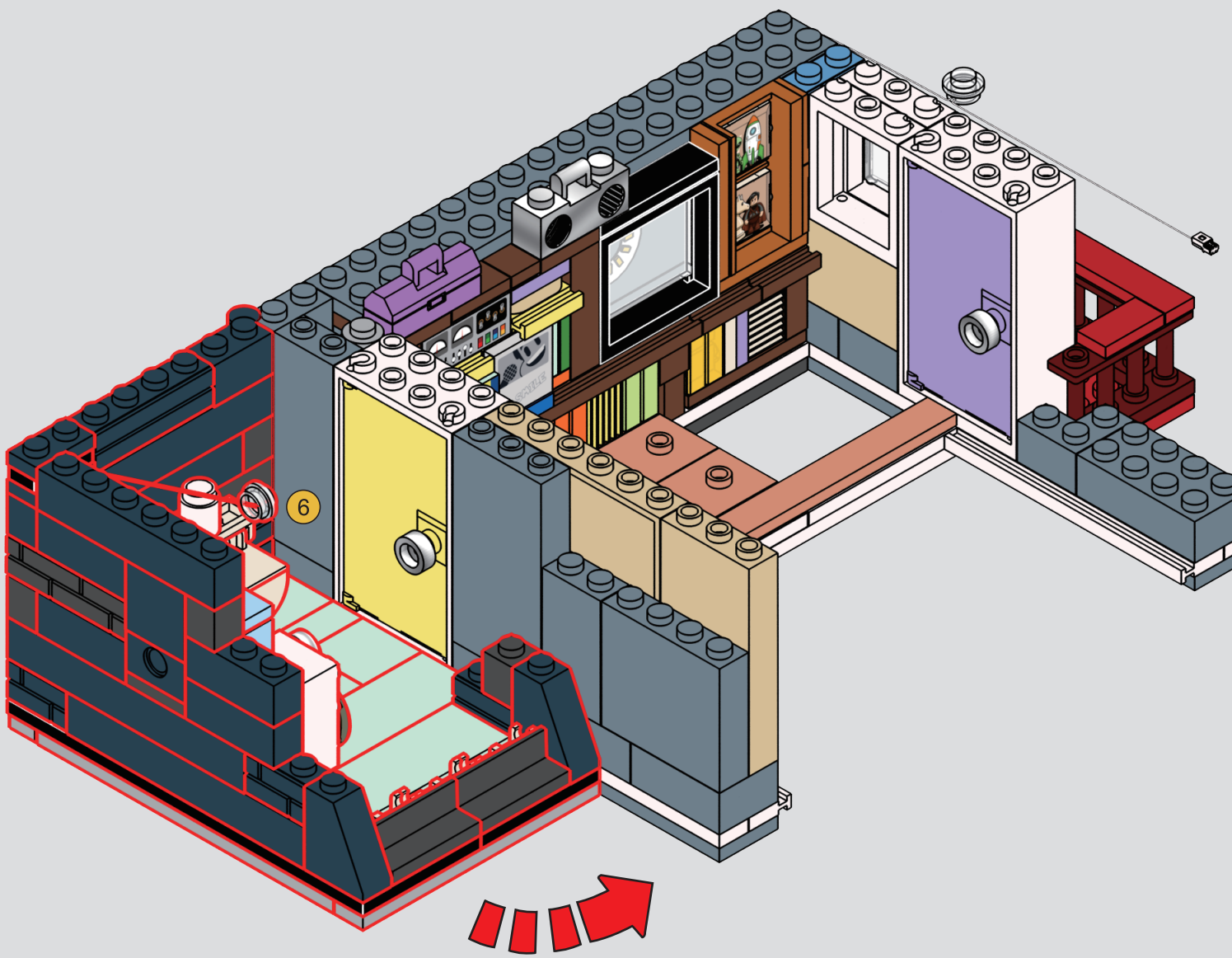

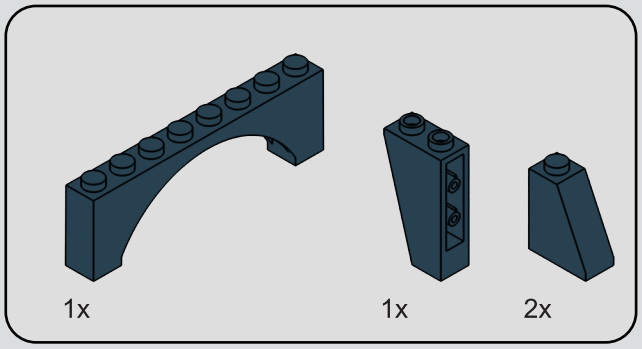

94

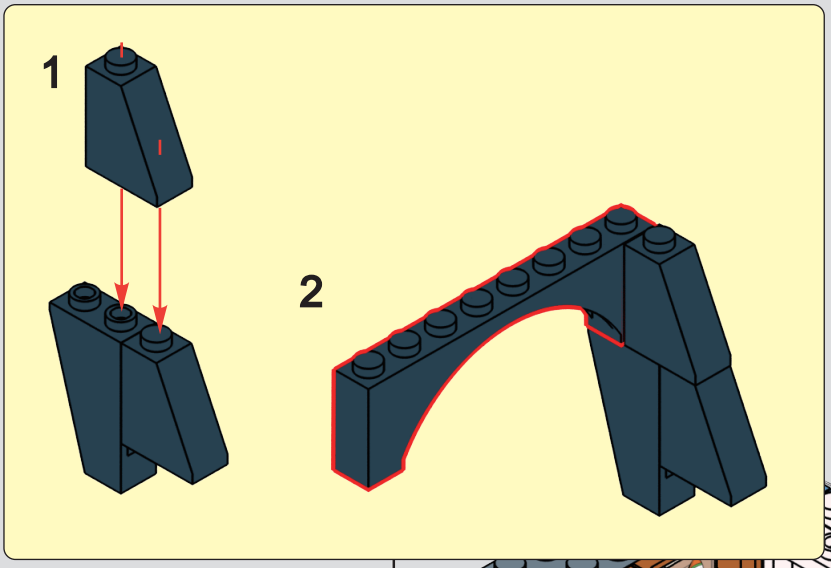



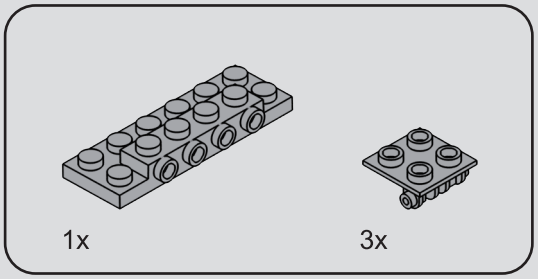

95

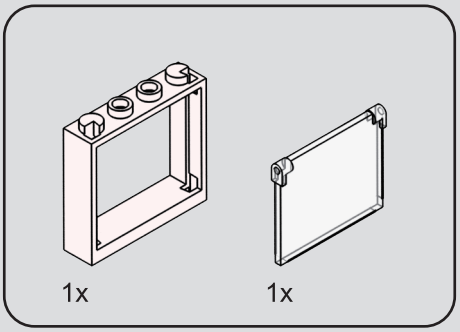

96

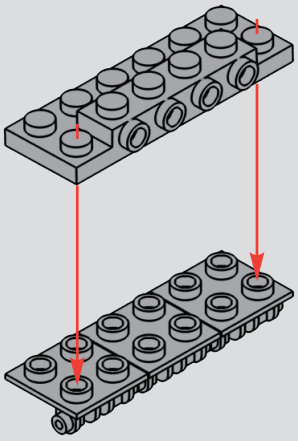

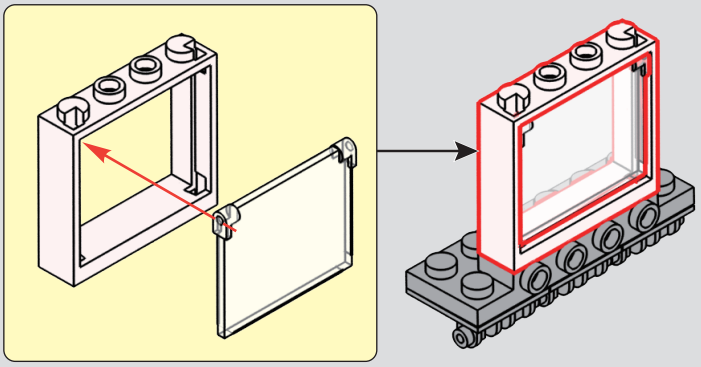

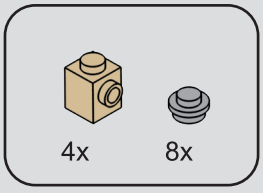

97

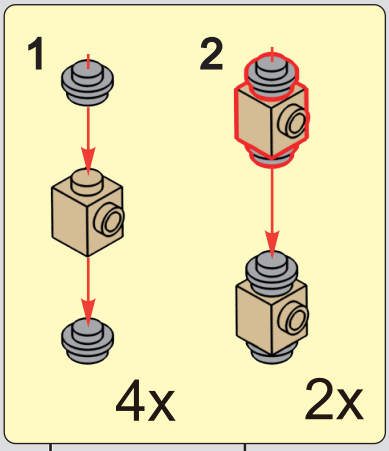

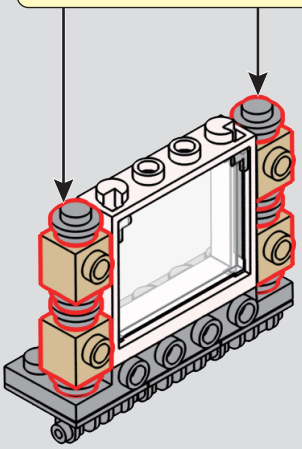

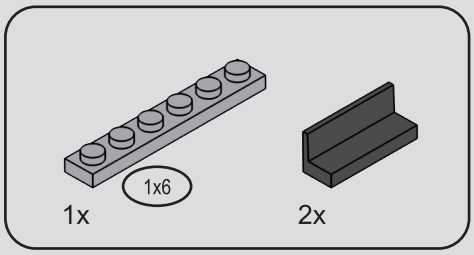

98

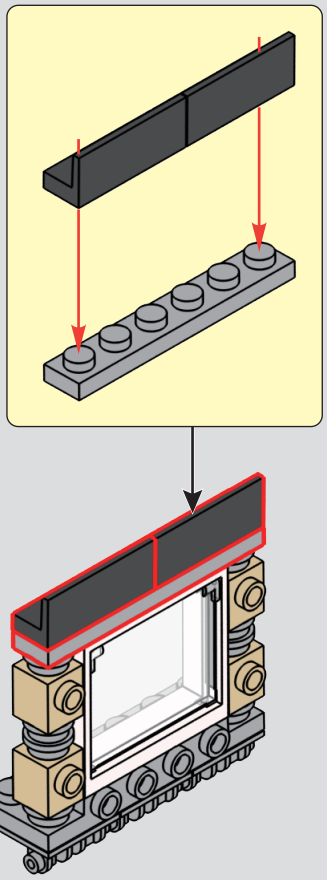

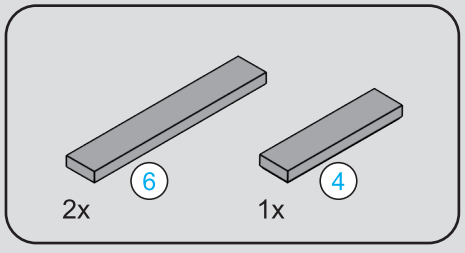

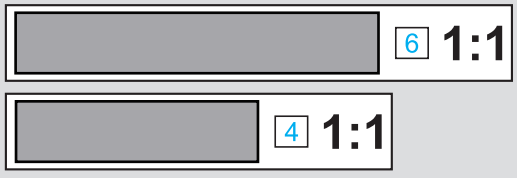

99

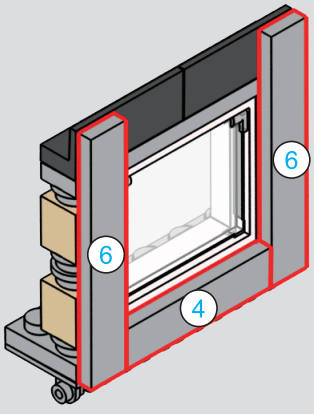

100

1



2



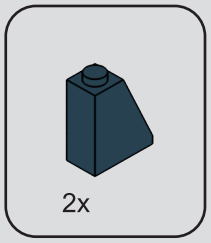

101

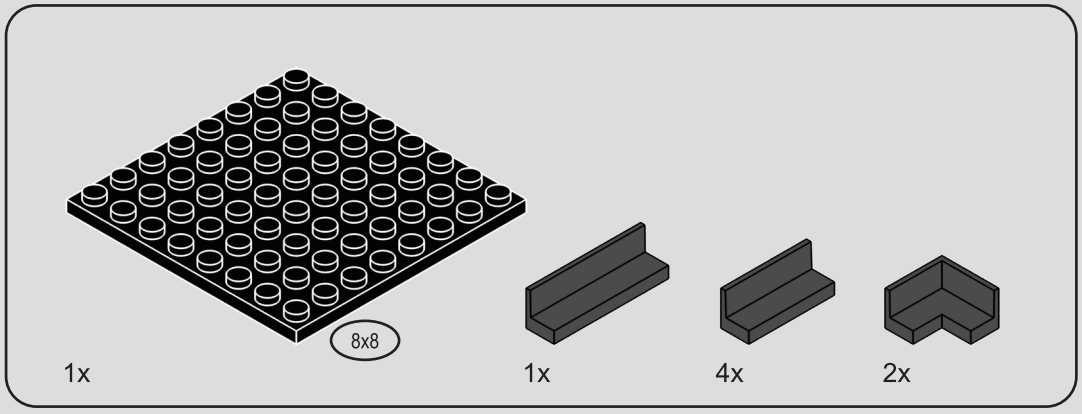

102

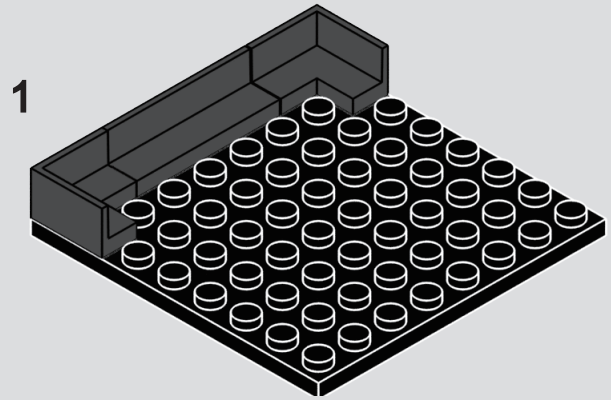

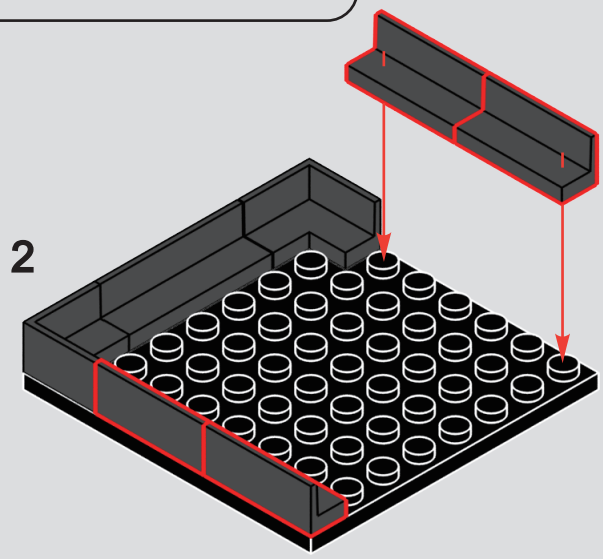

103

1

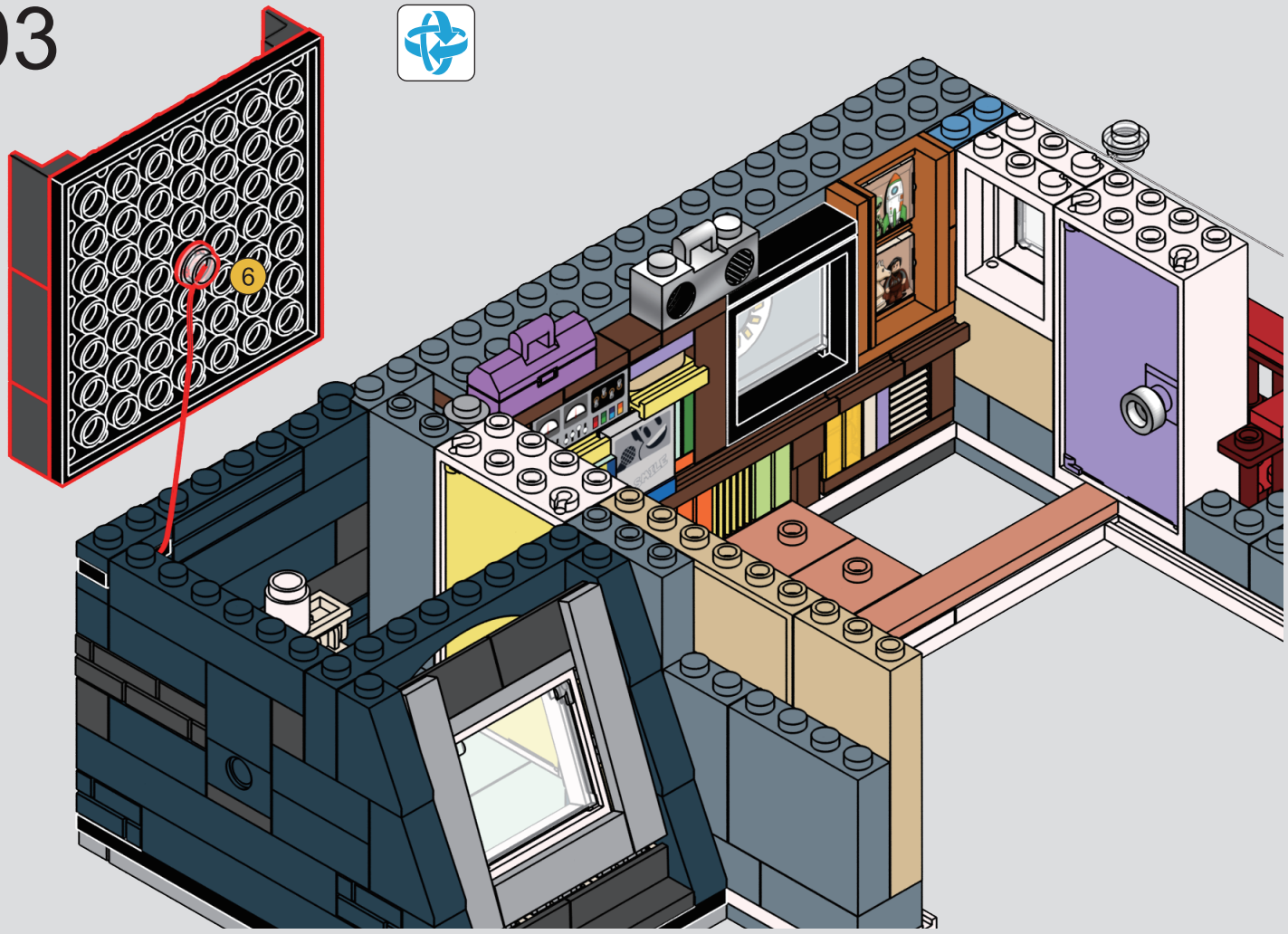

2

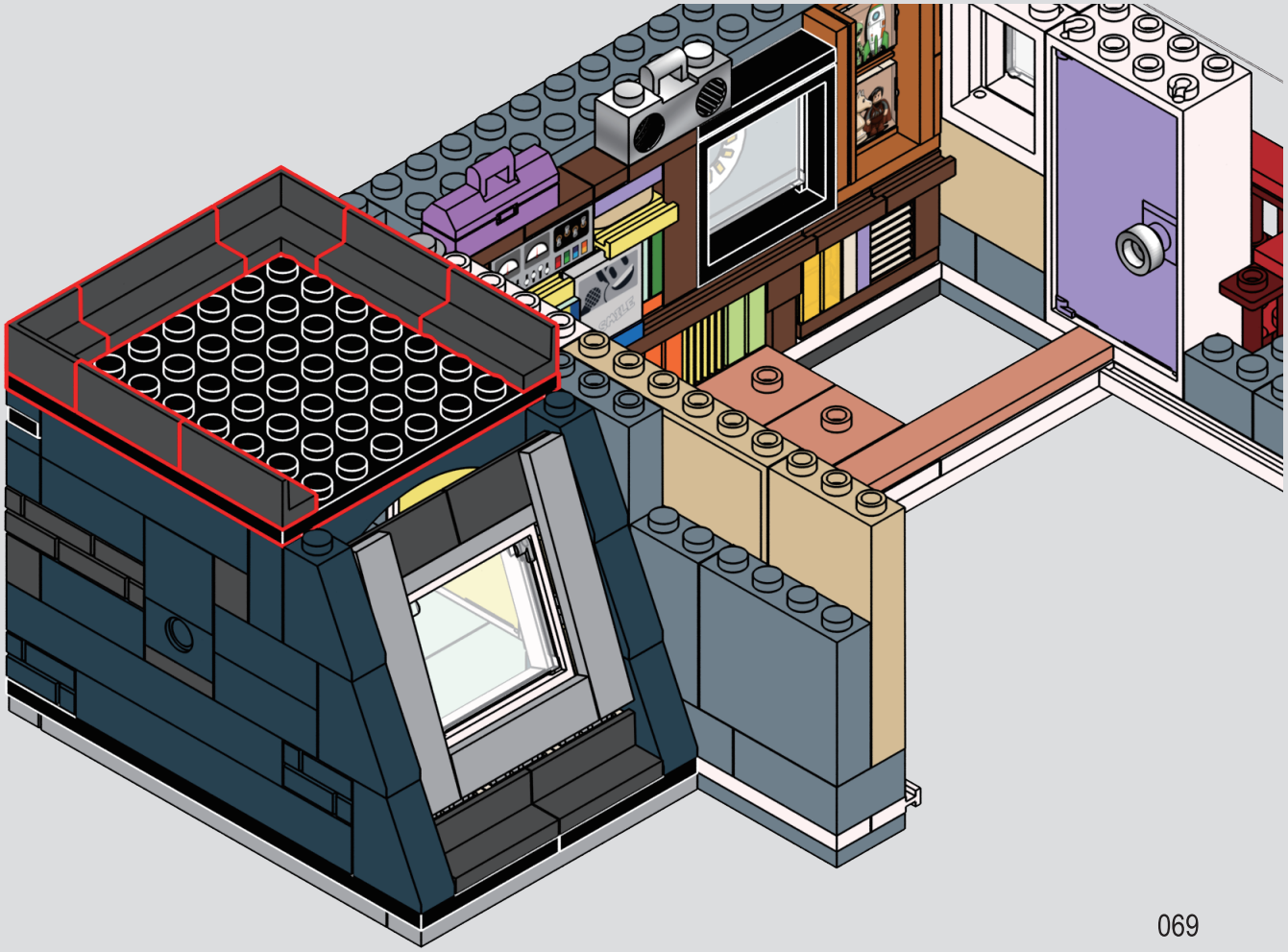

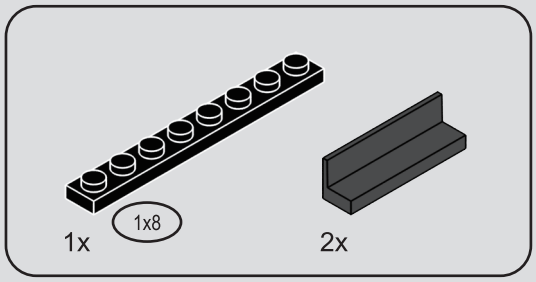

104

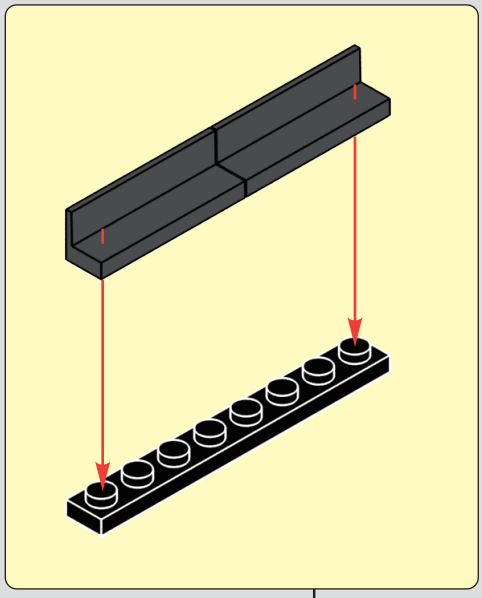



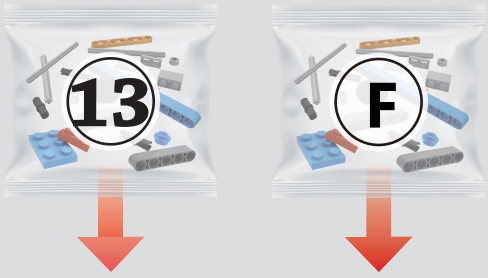
13
F

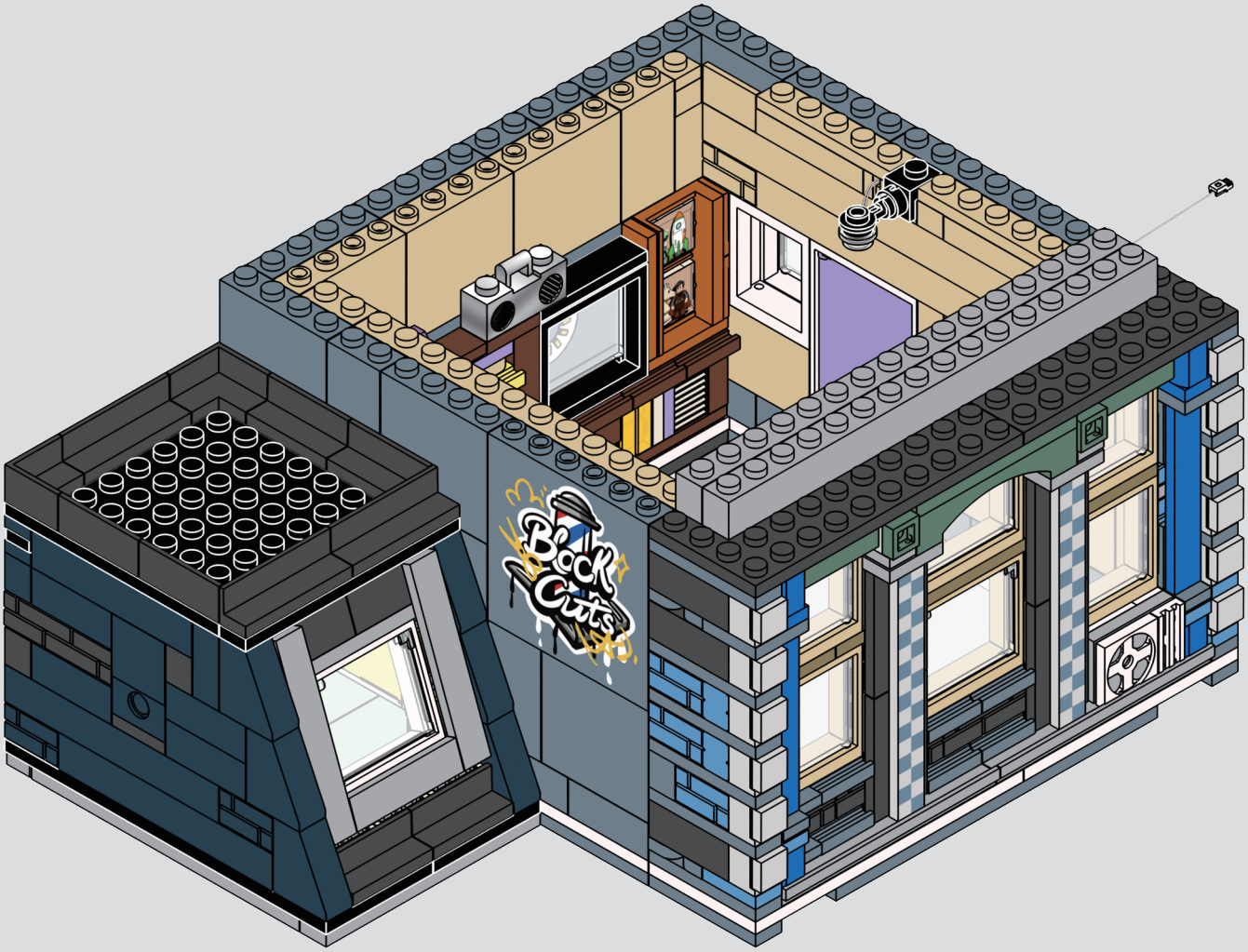
Block Cuts

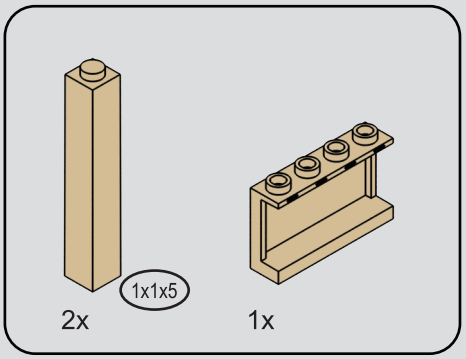

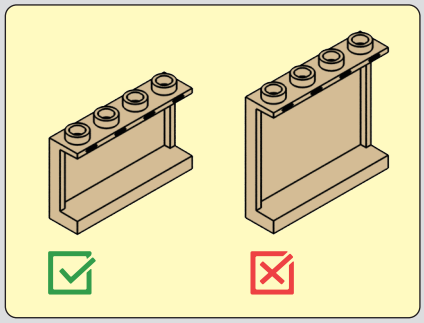

105

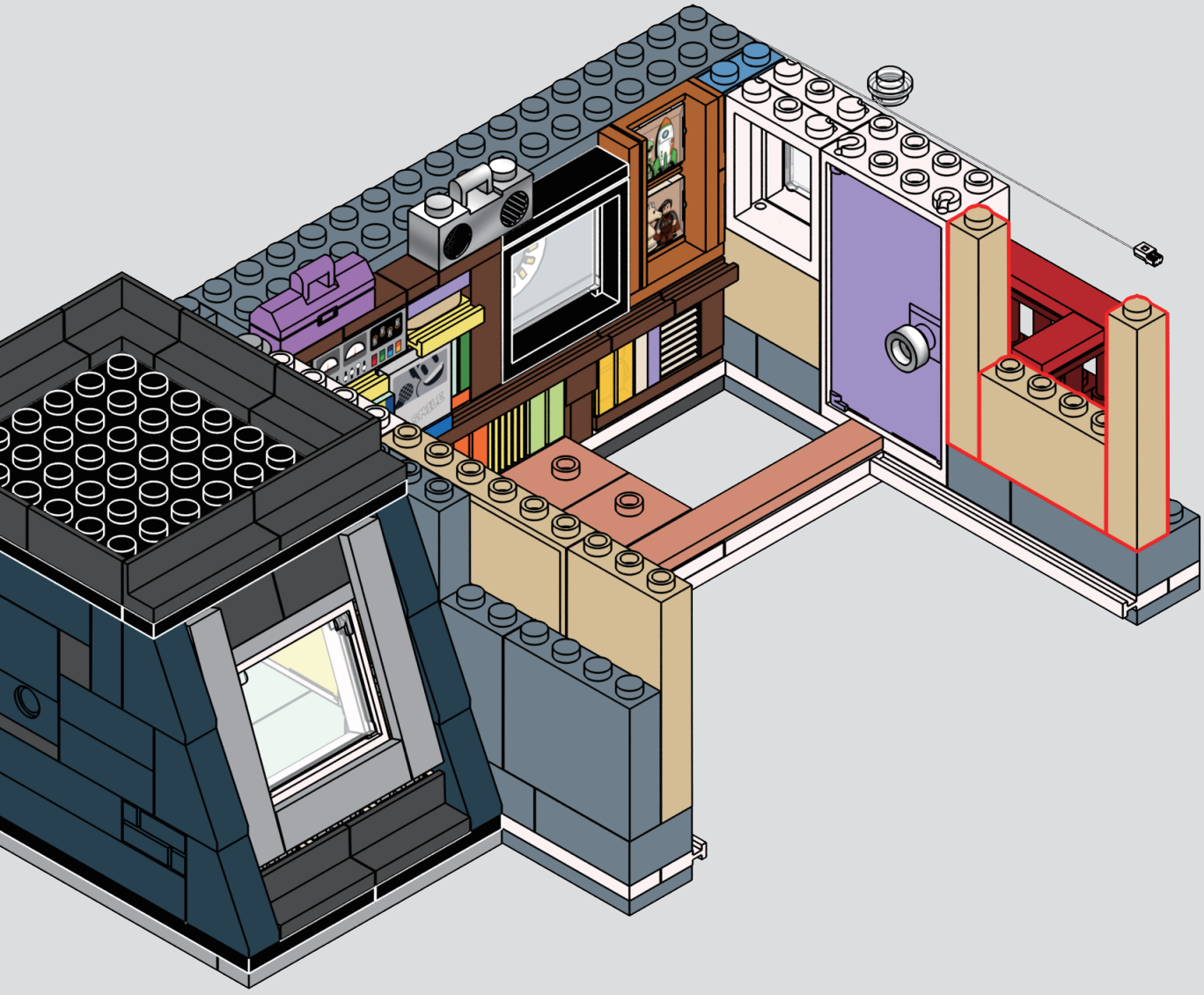



106

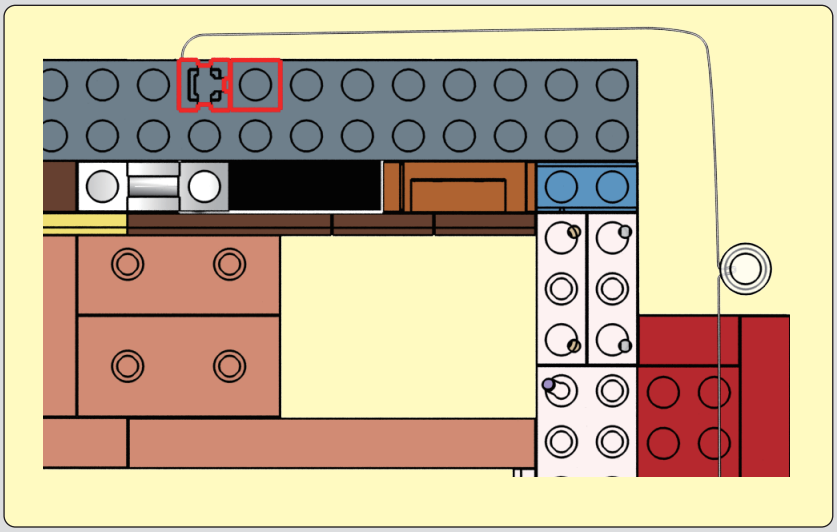

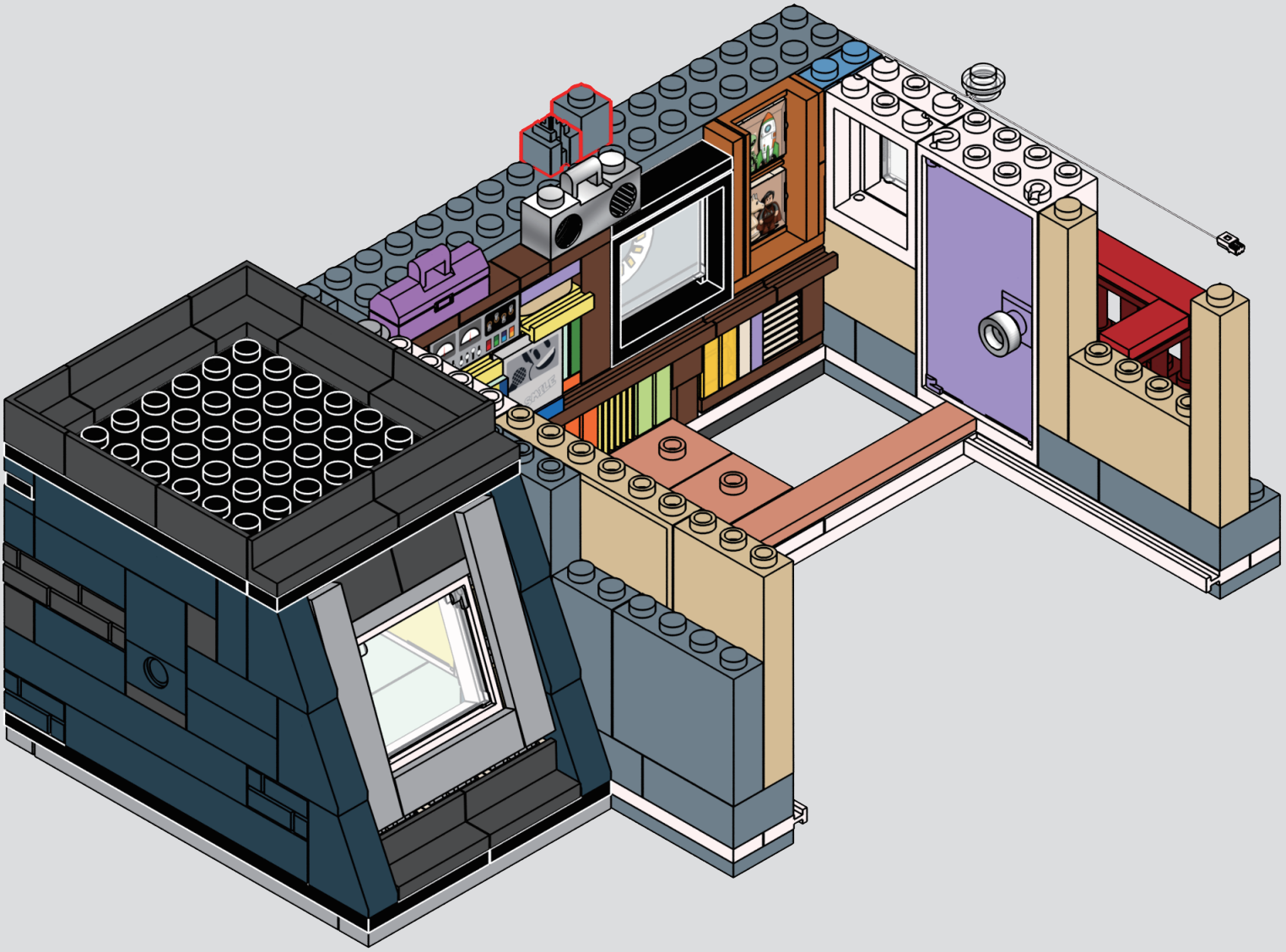

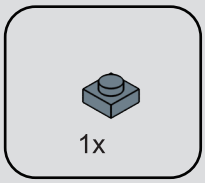

107

1

2

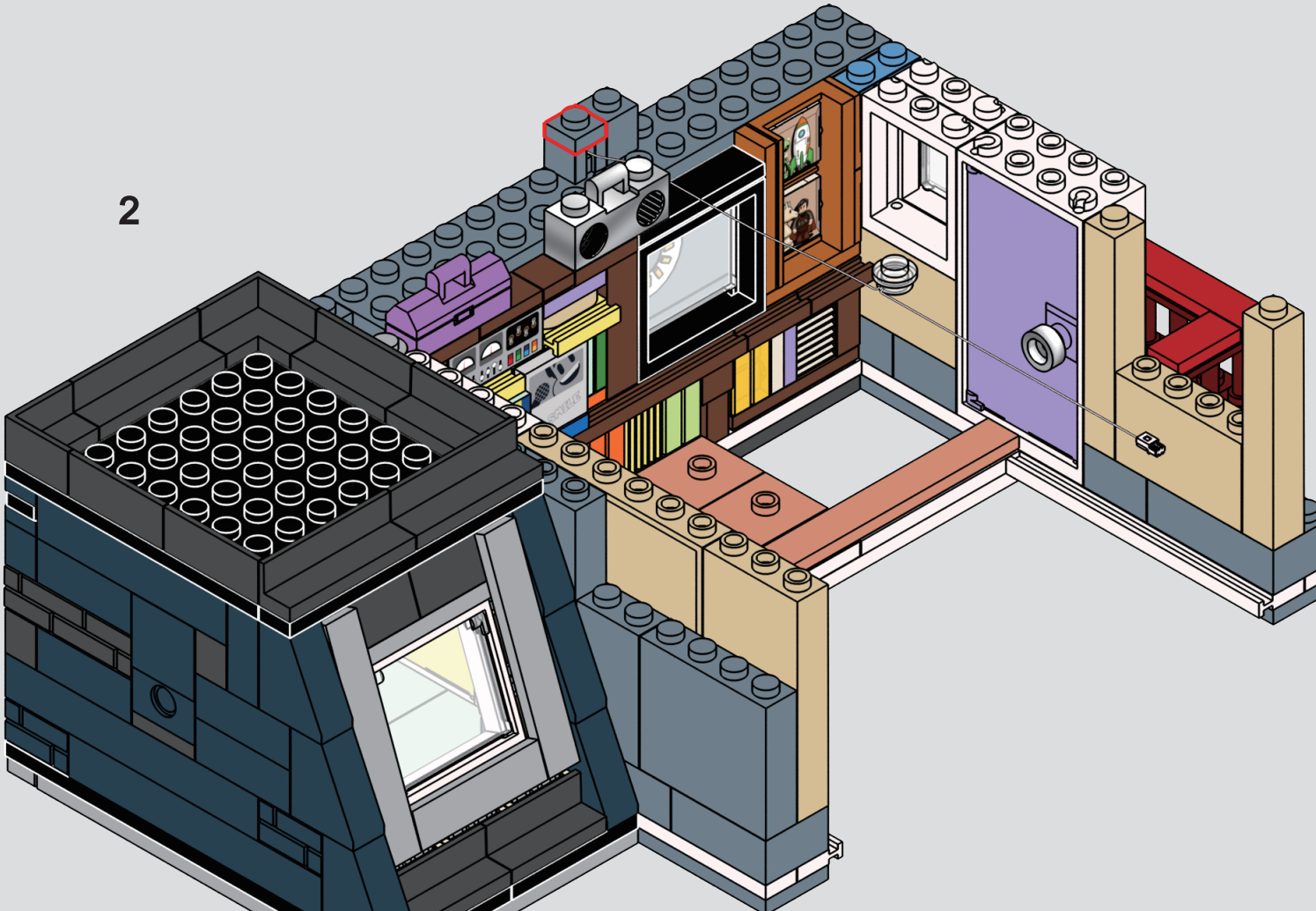

108

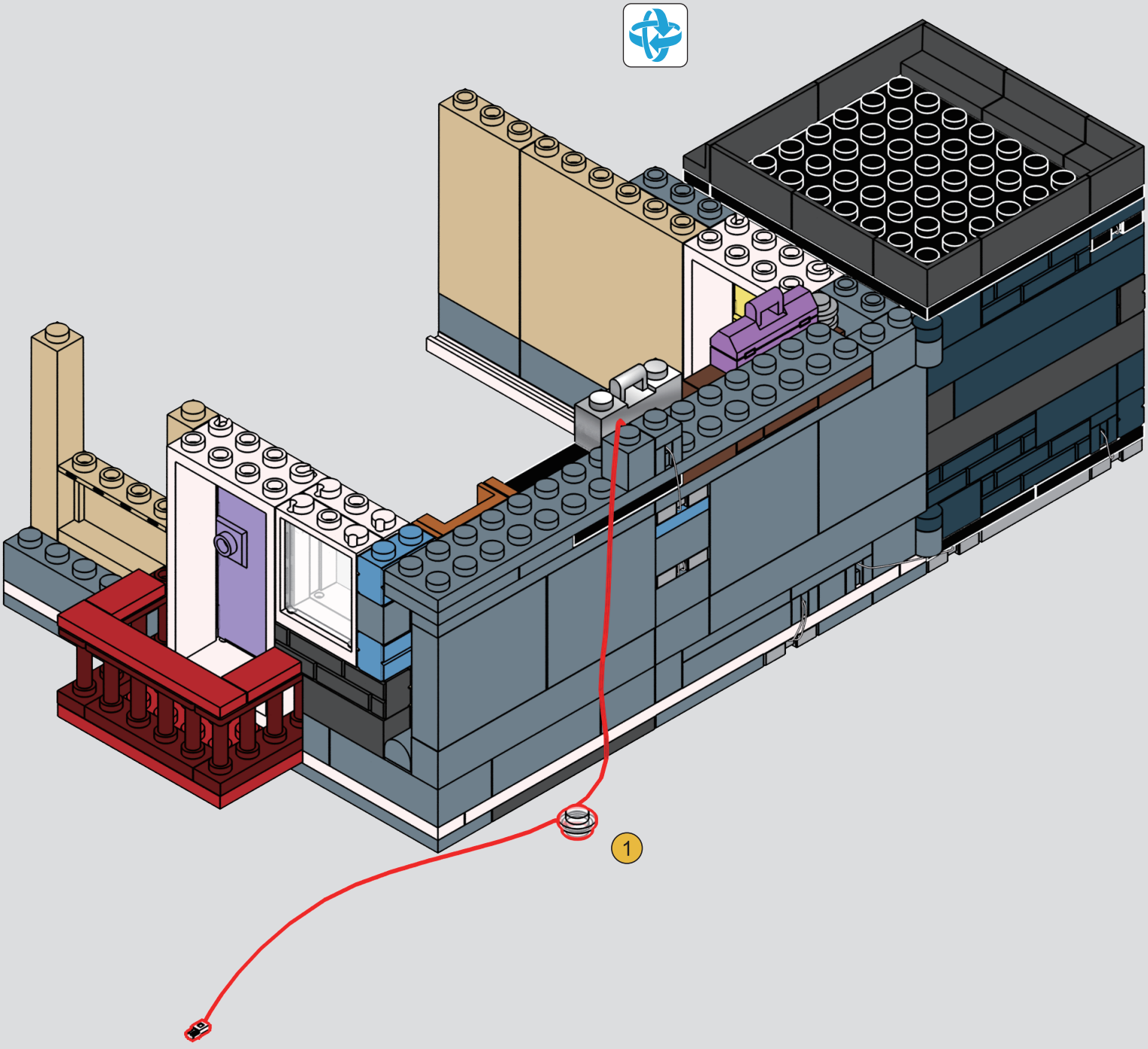

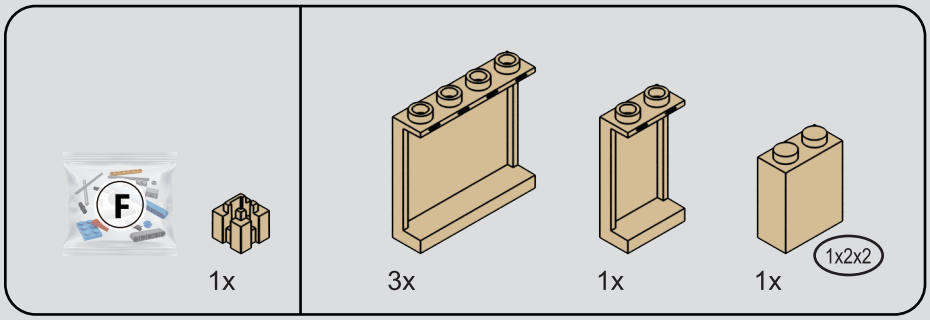

109

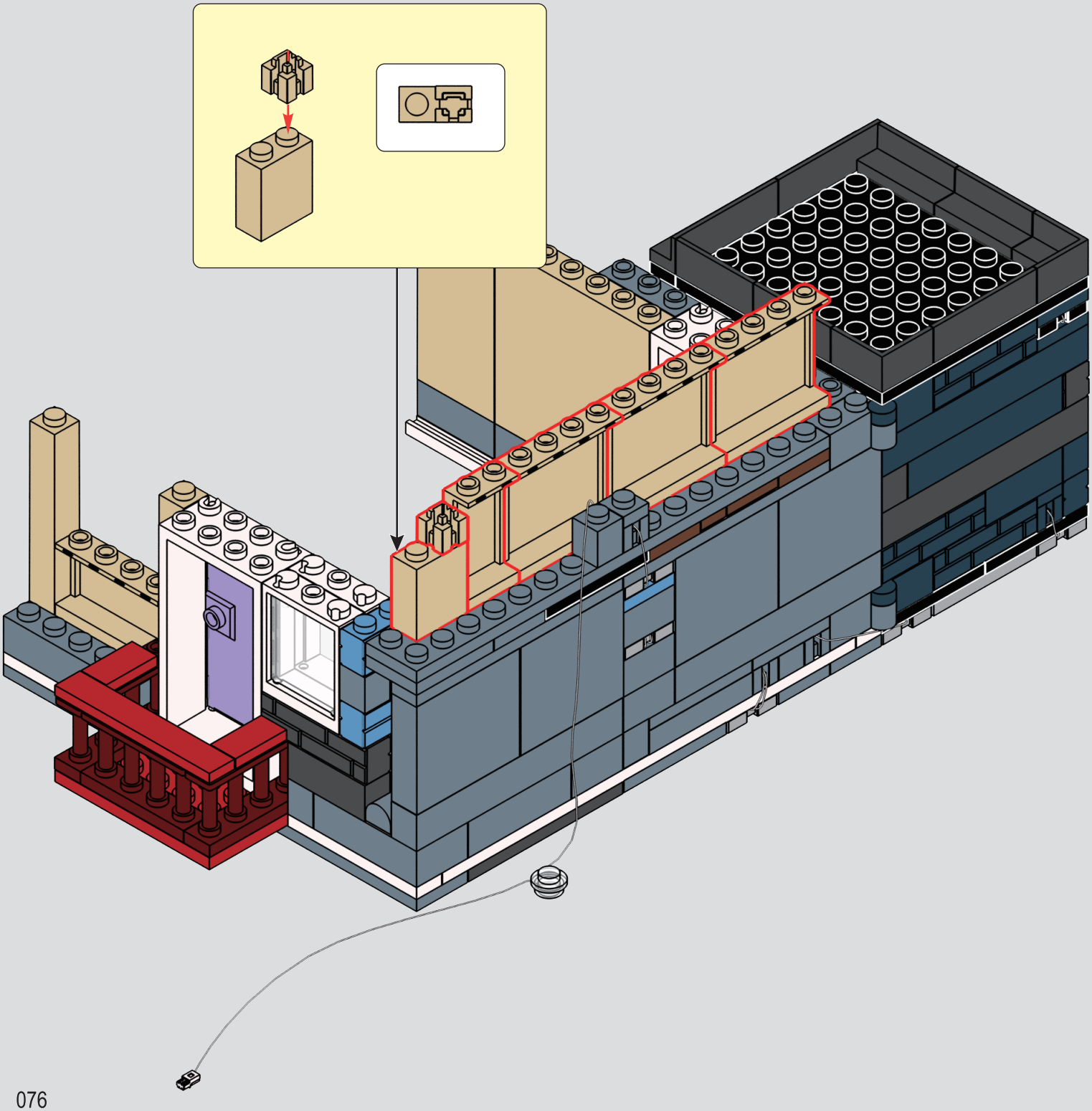

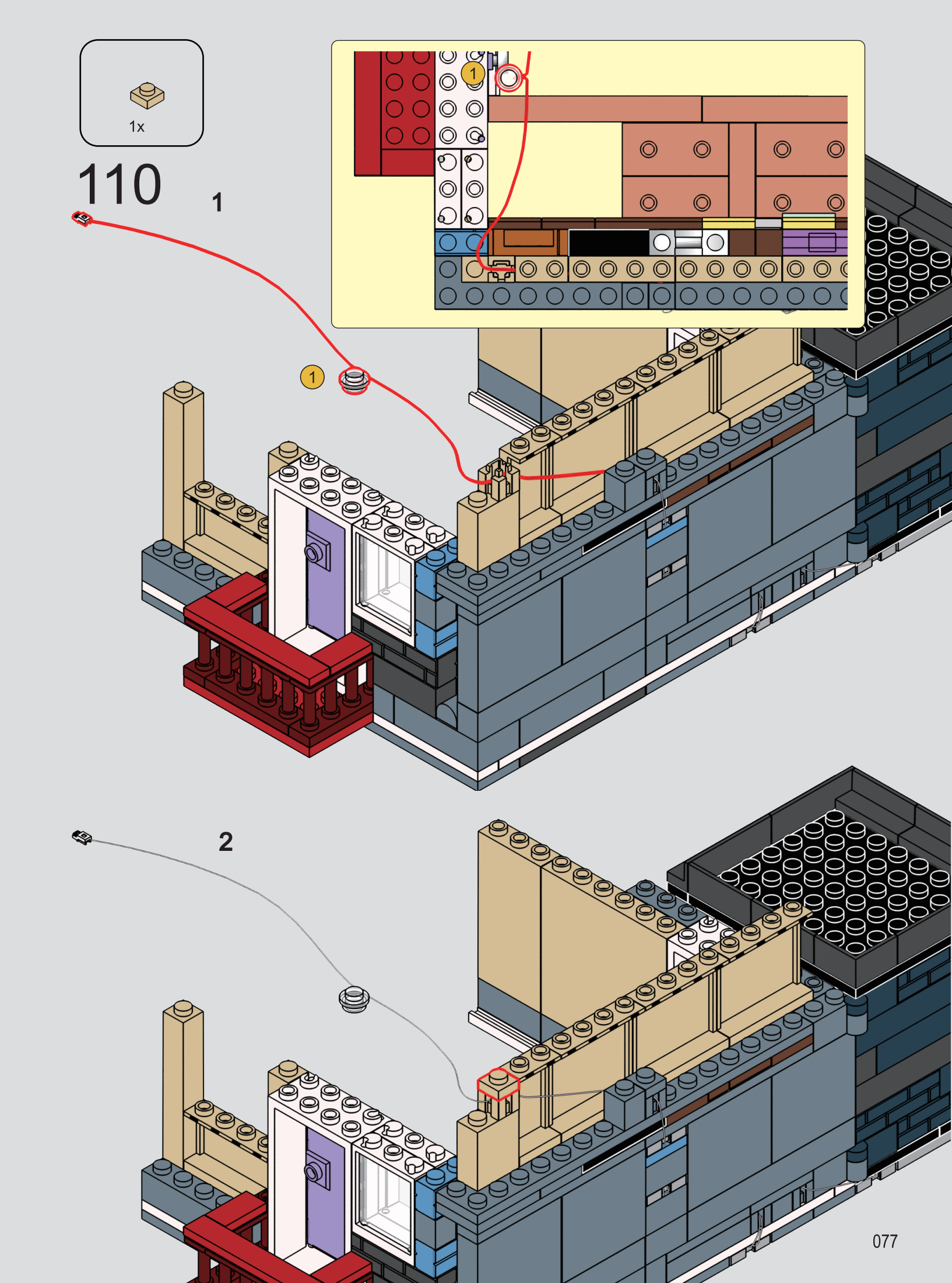
1x
110
1
1
1
2

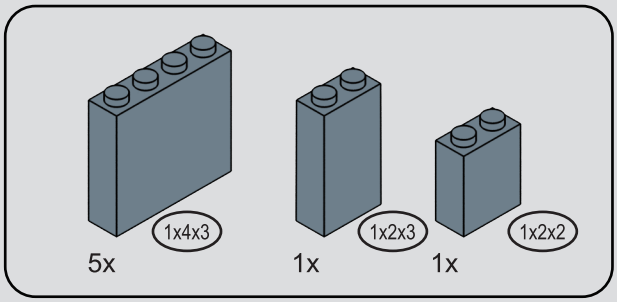

111

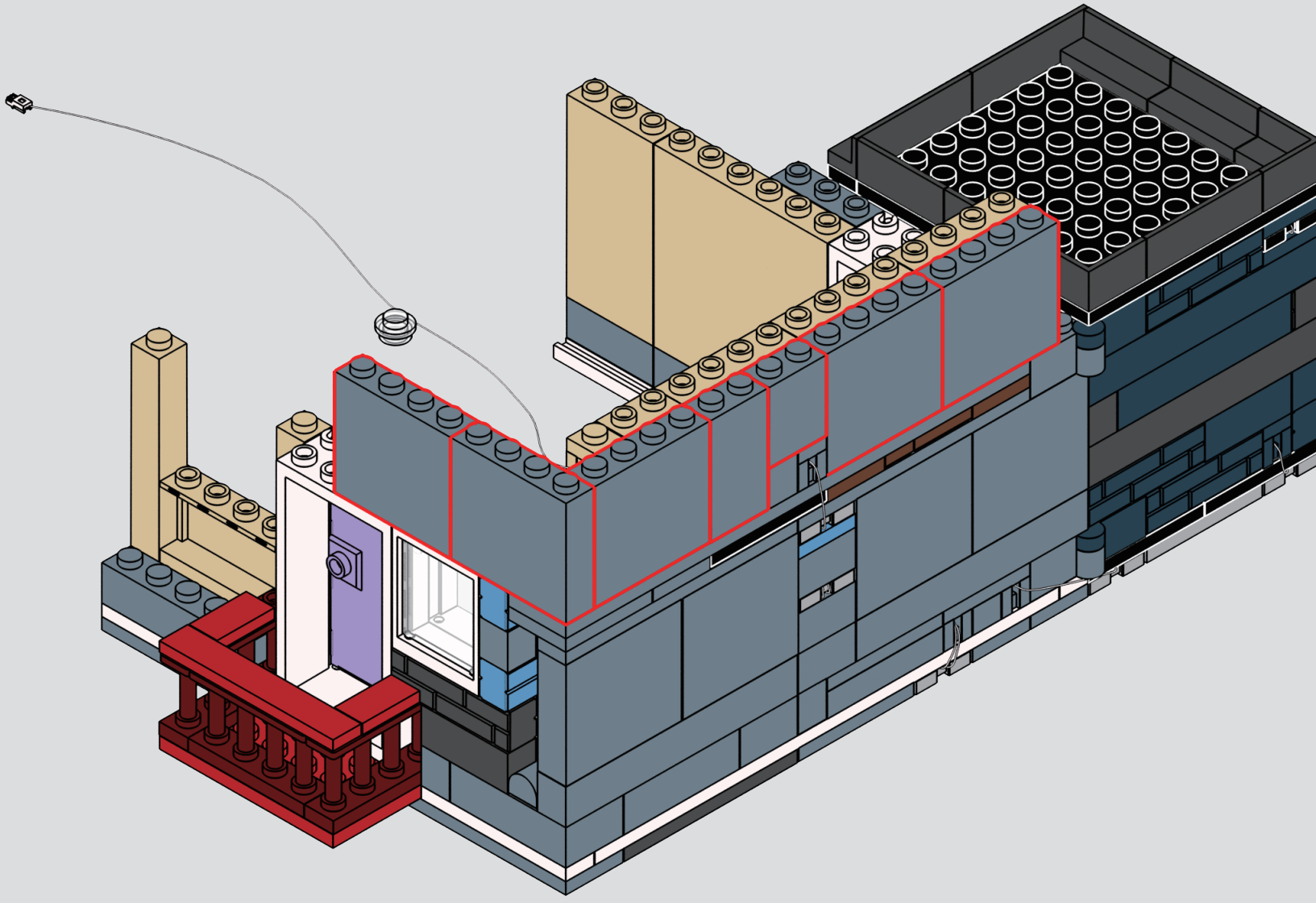

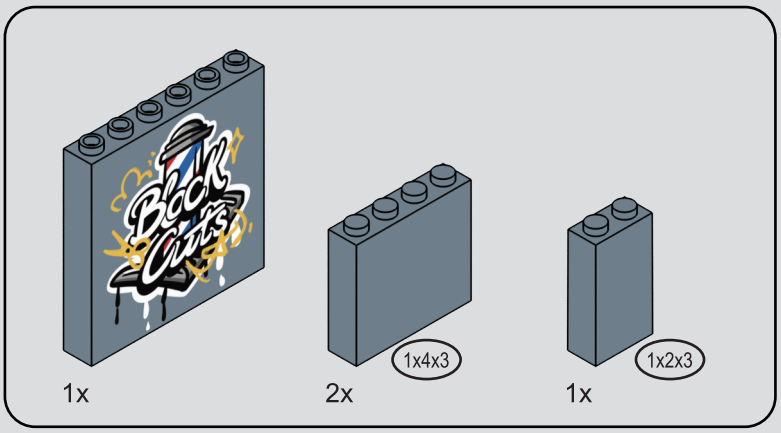

112



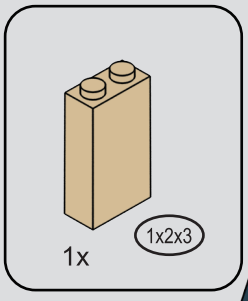

113

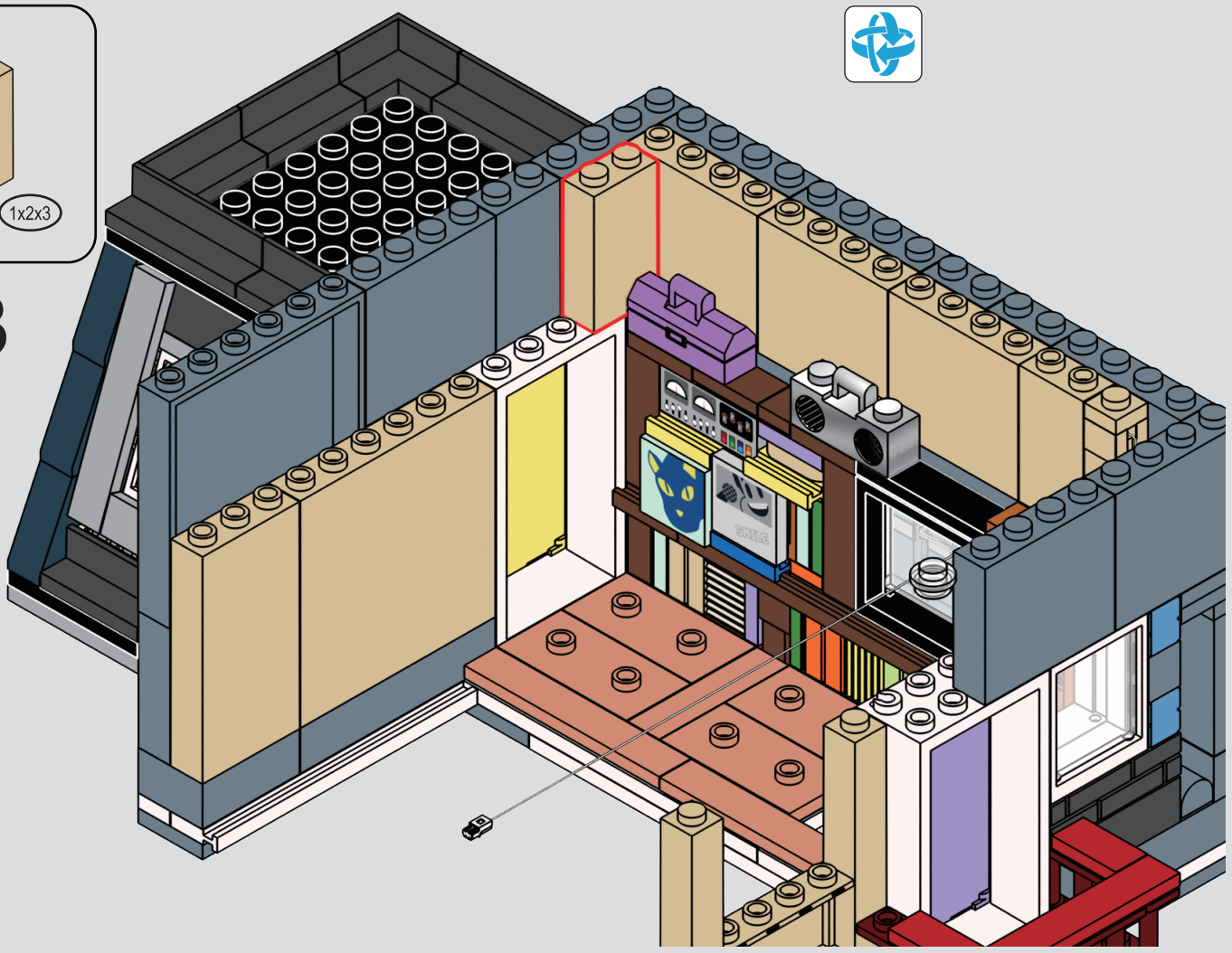

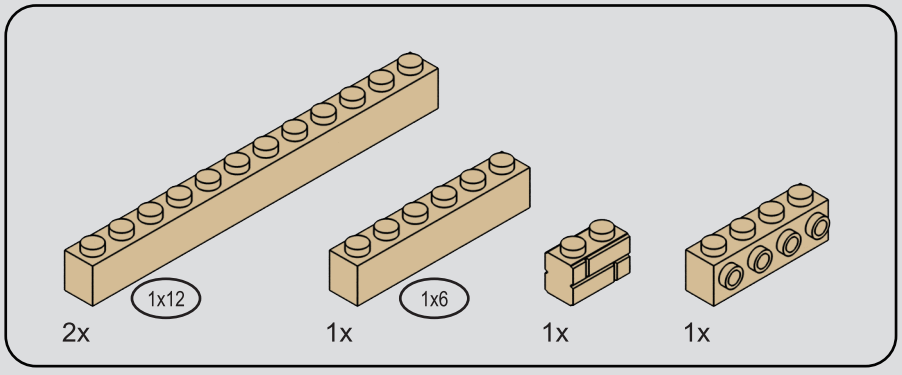

114

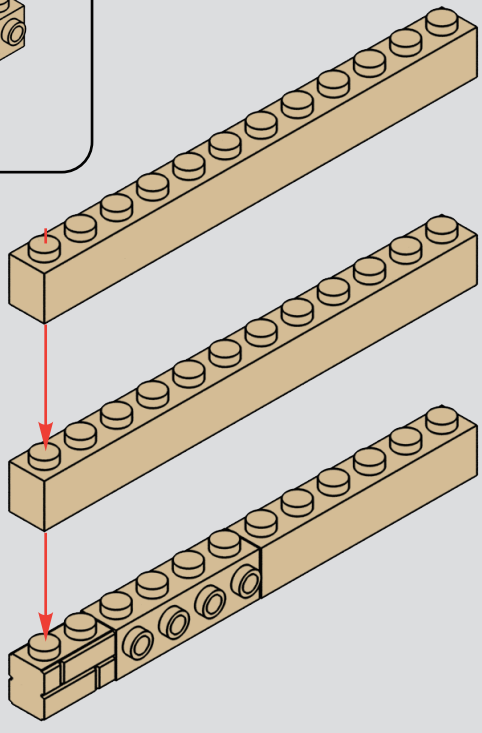



115

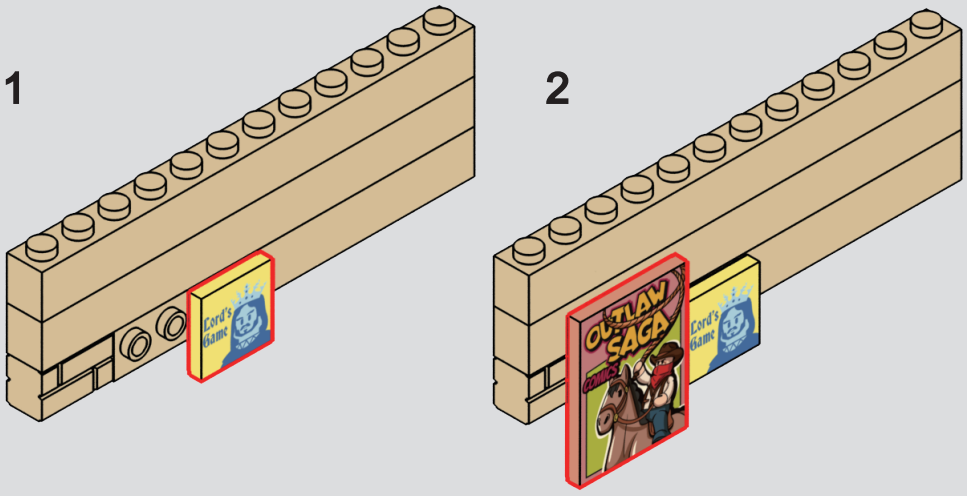

116

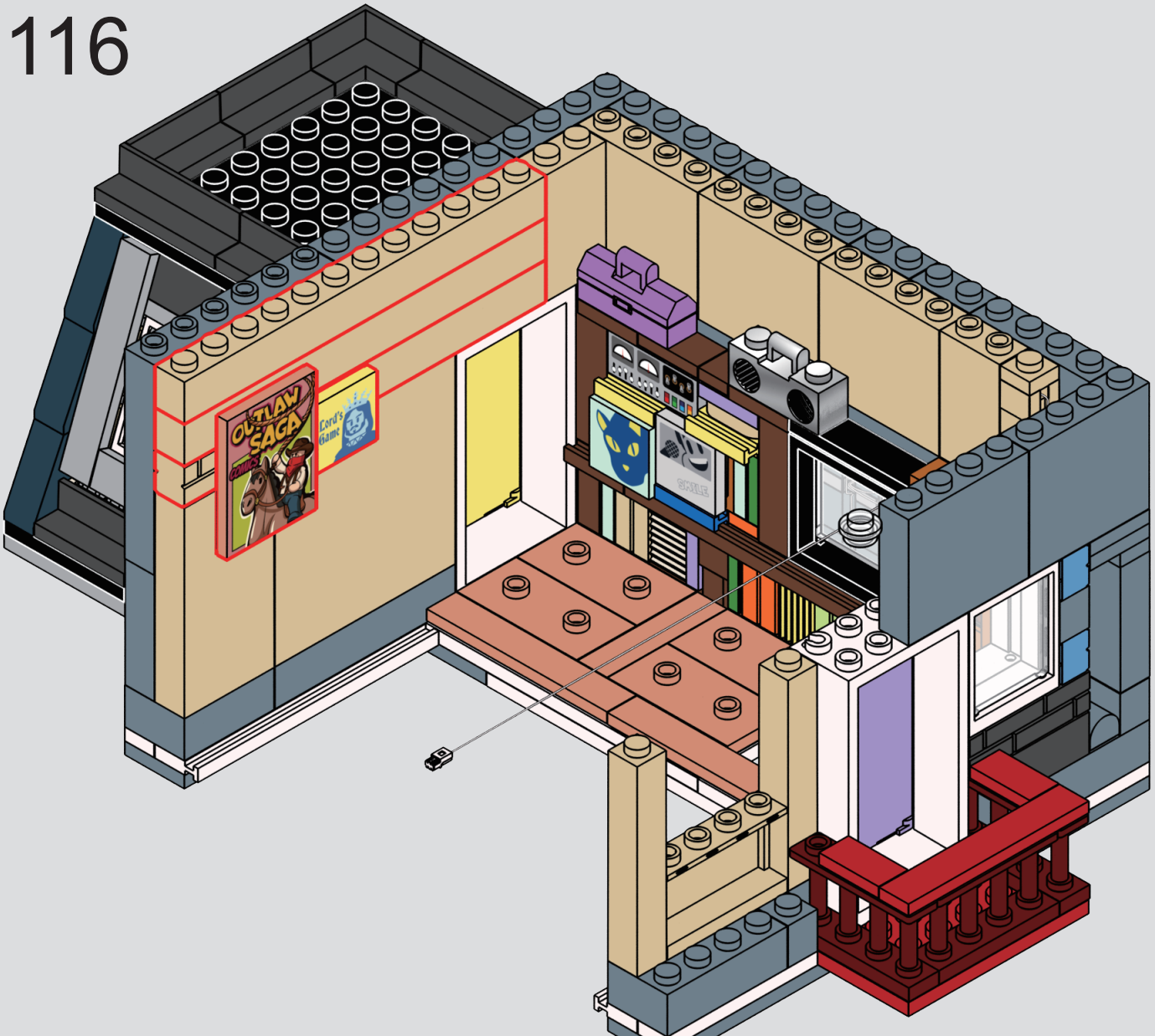

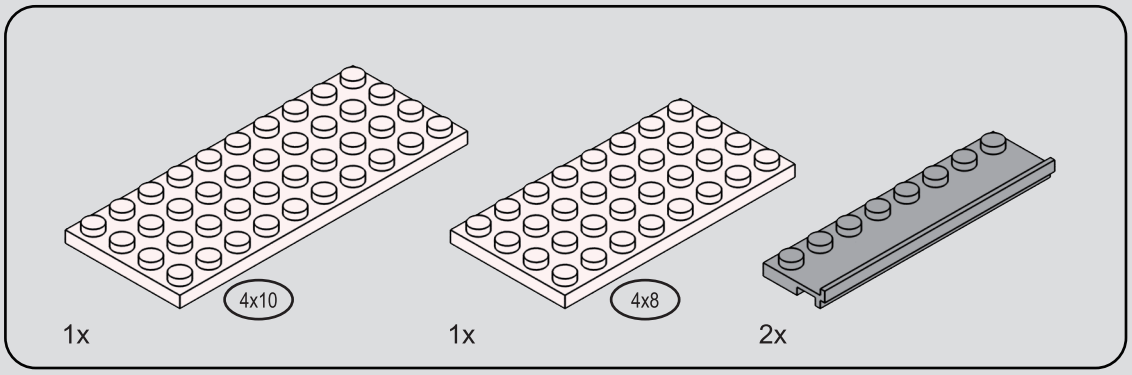

117

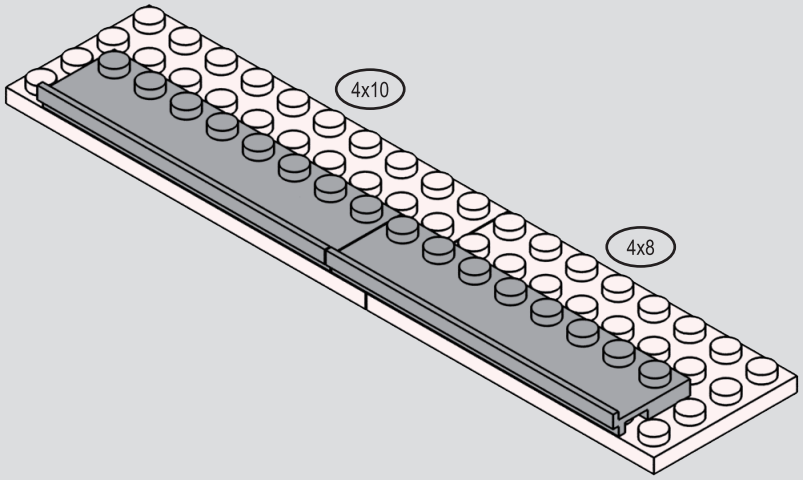

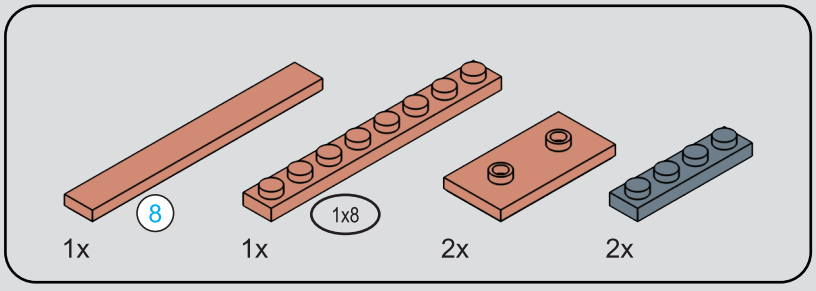

118

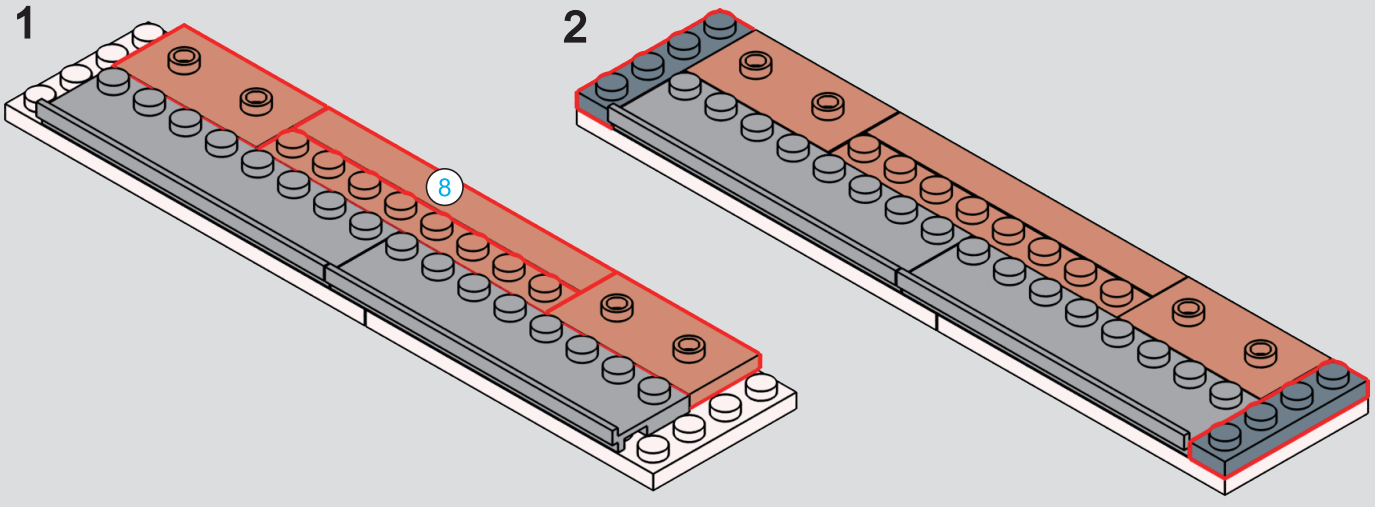



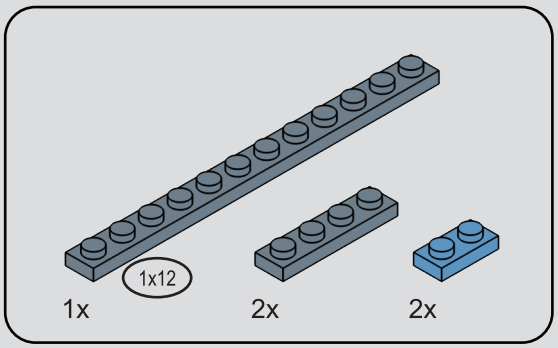

119

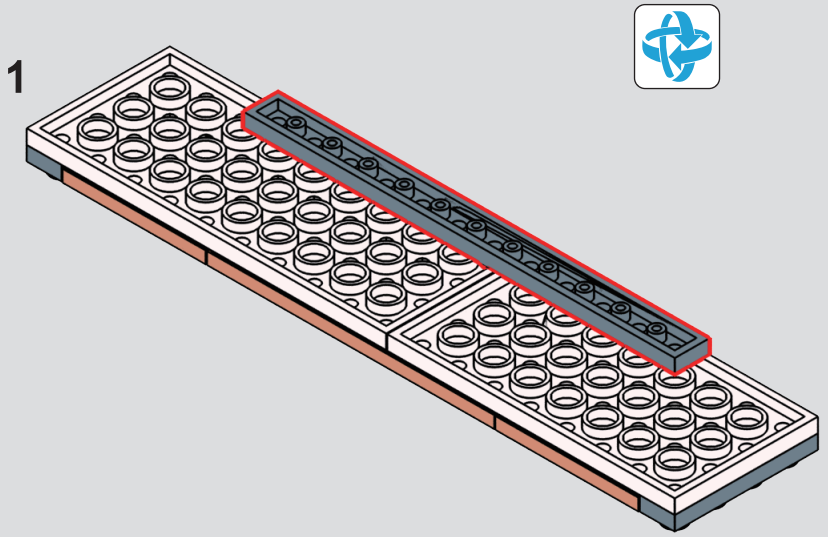

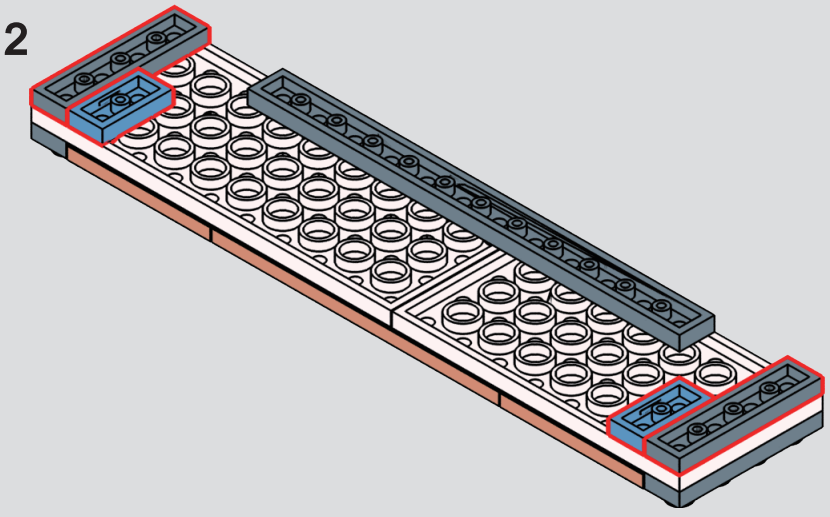

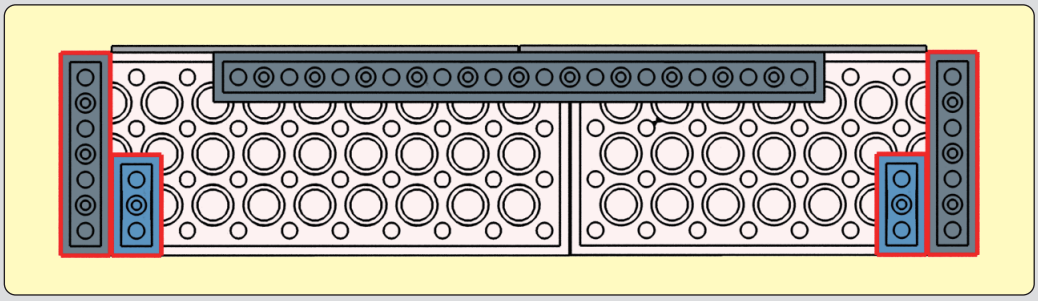

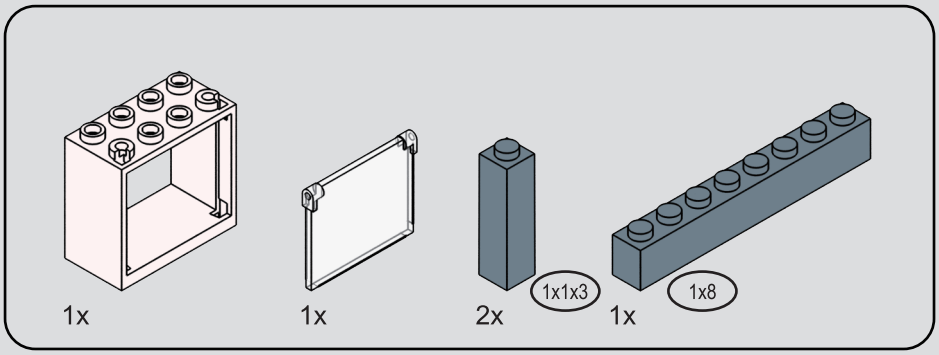

120

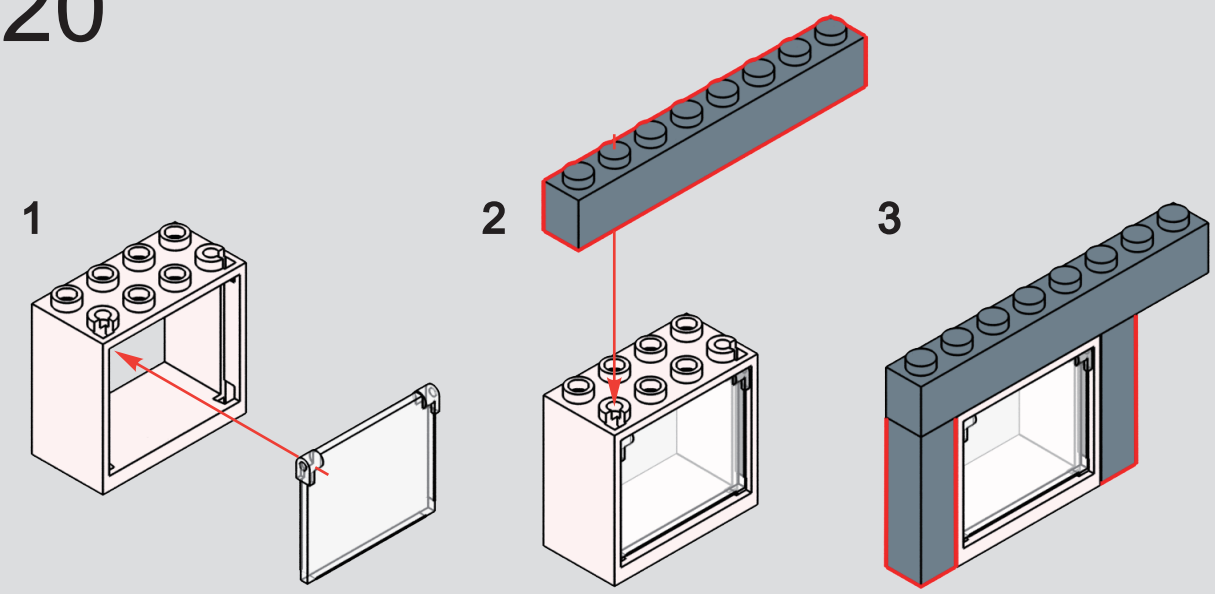

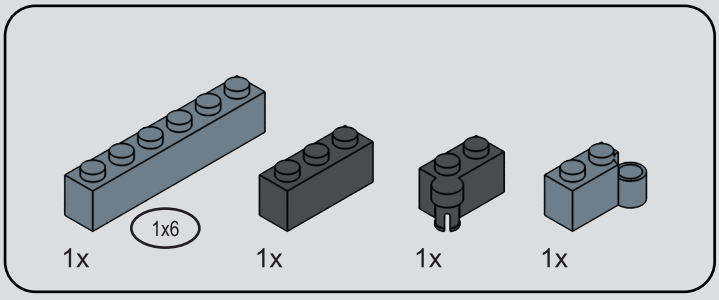

121

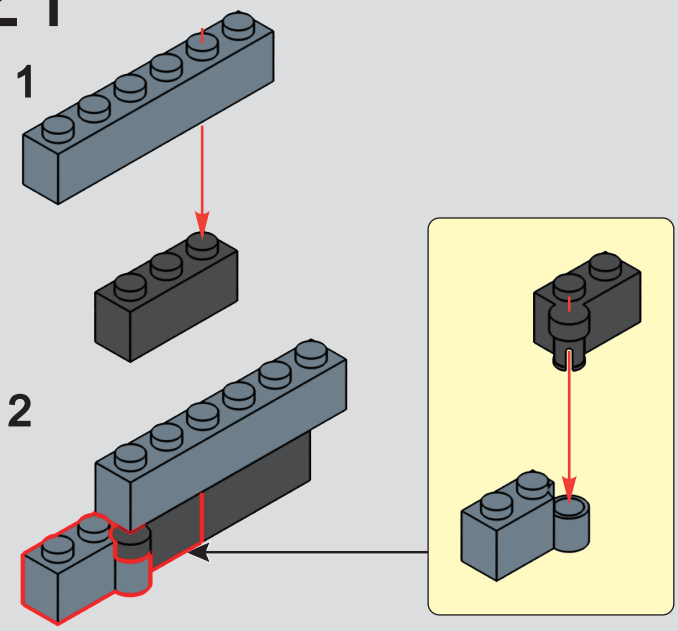

122

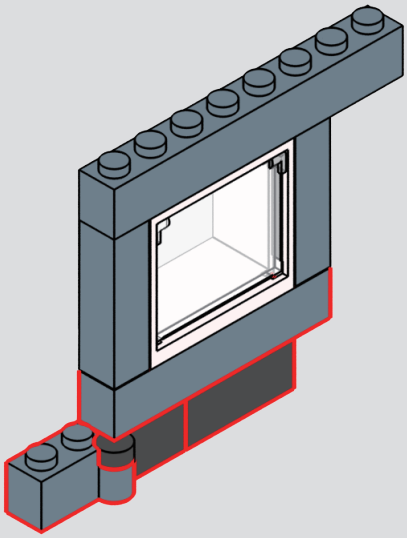

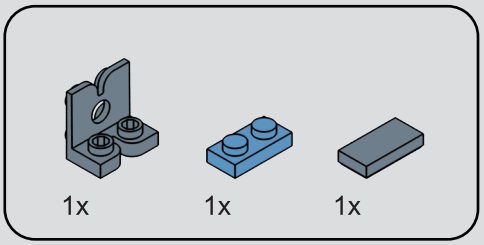

123

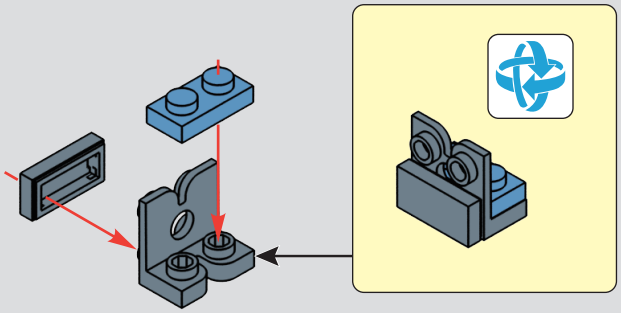

124

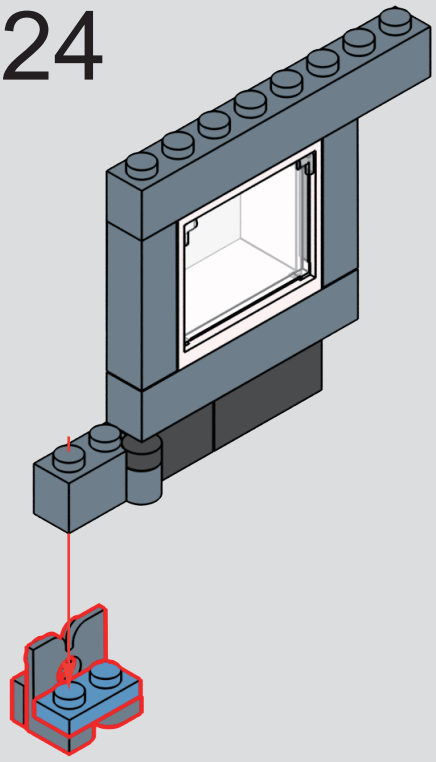

125

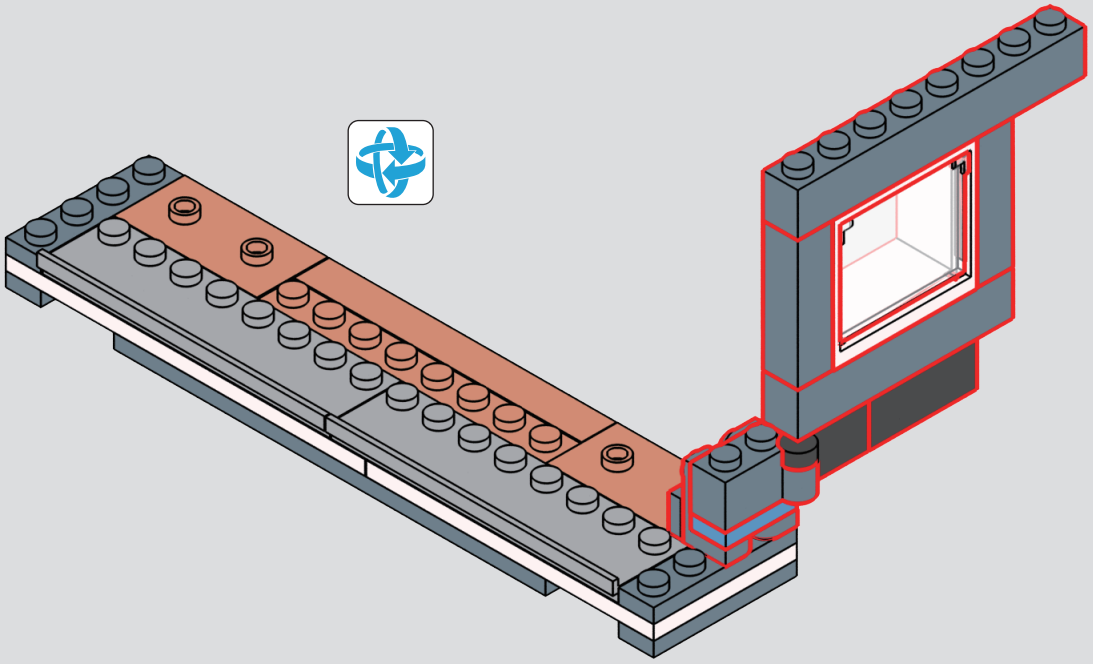

126

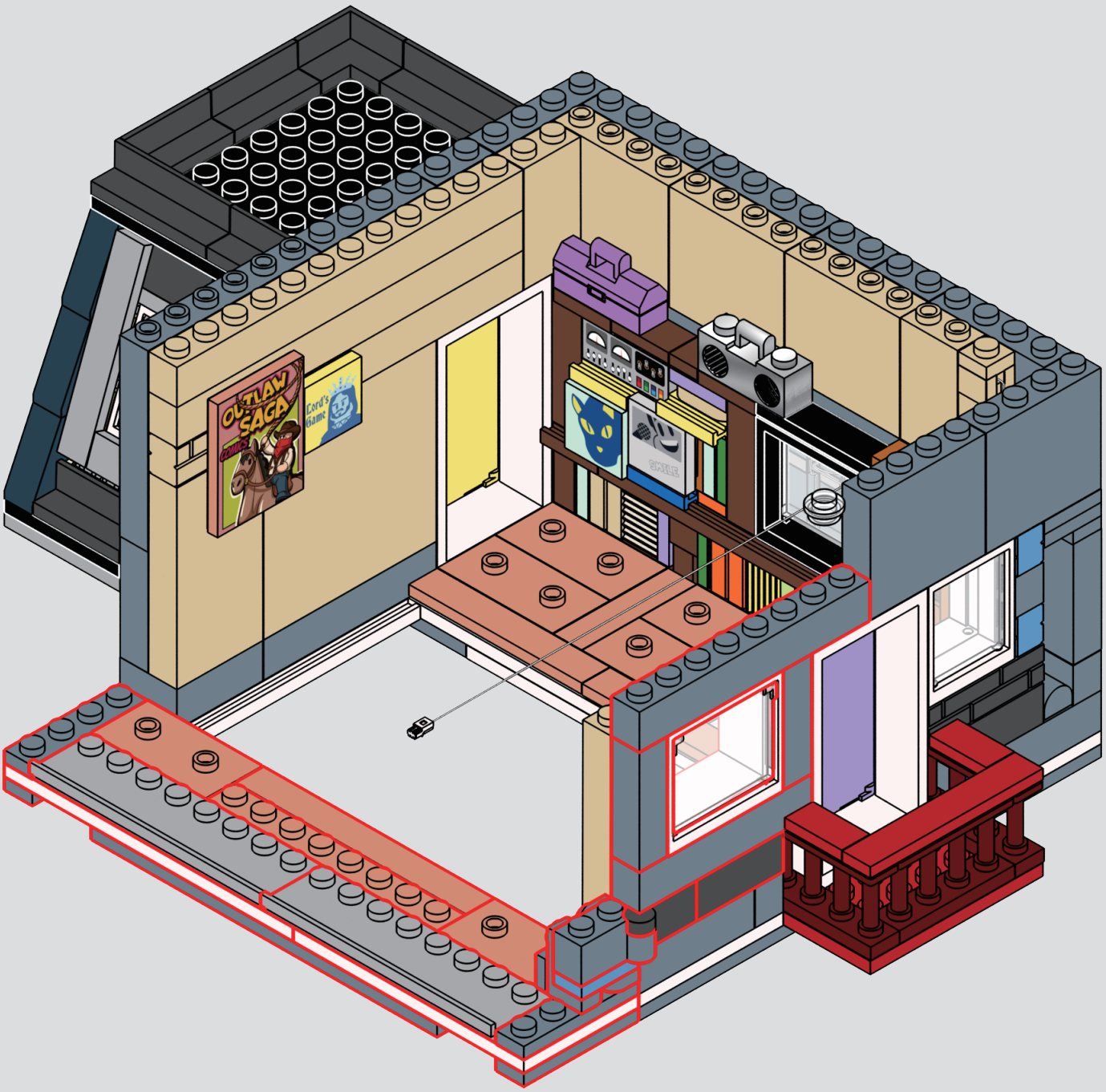

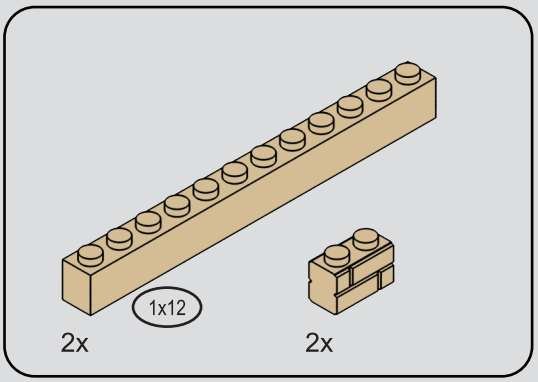

127

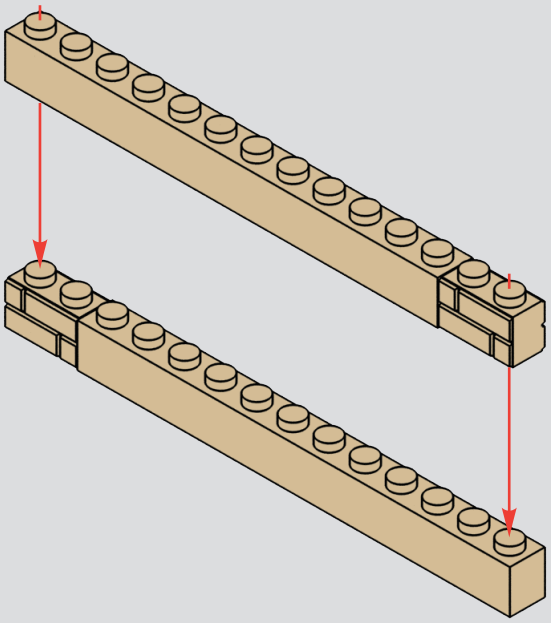

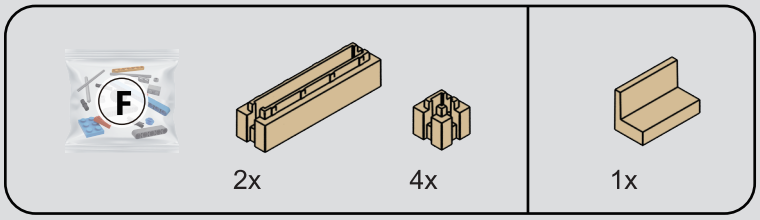

128

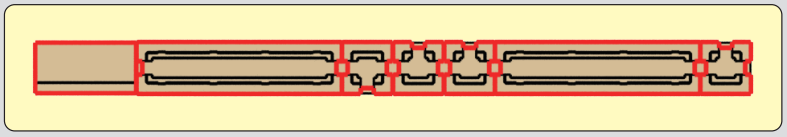

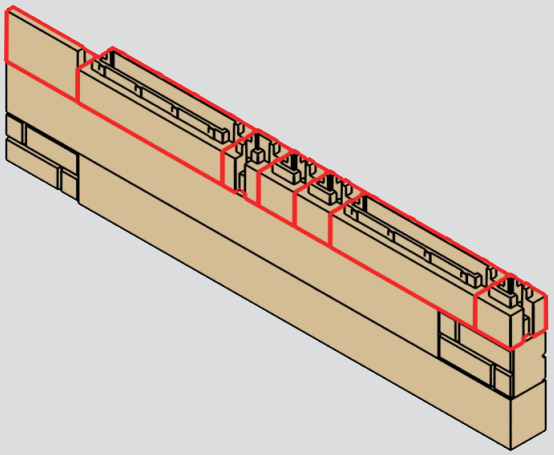

129

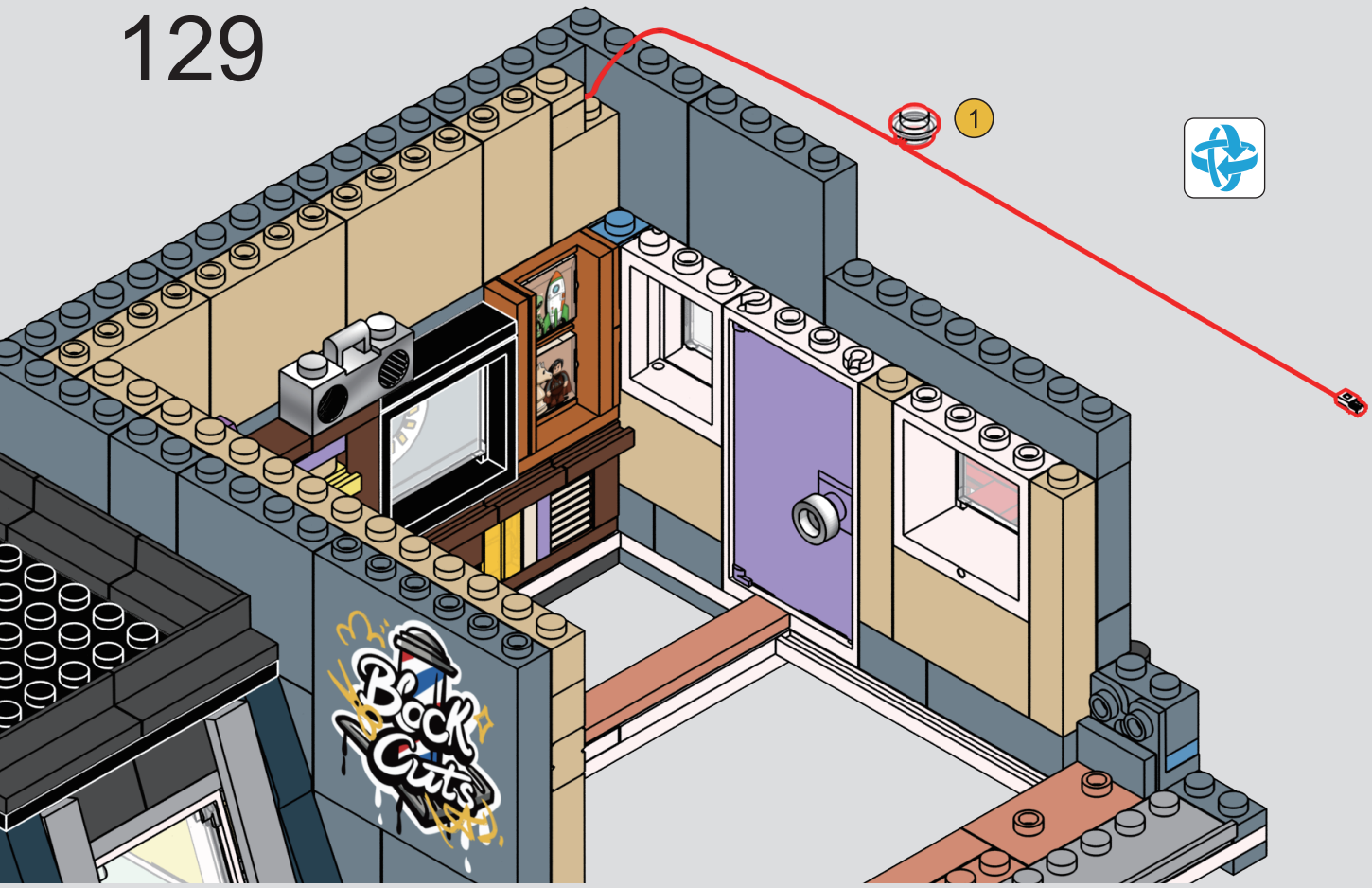

130

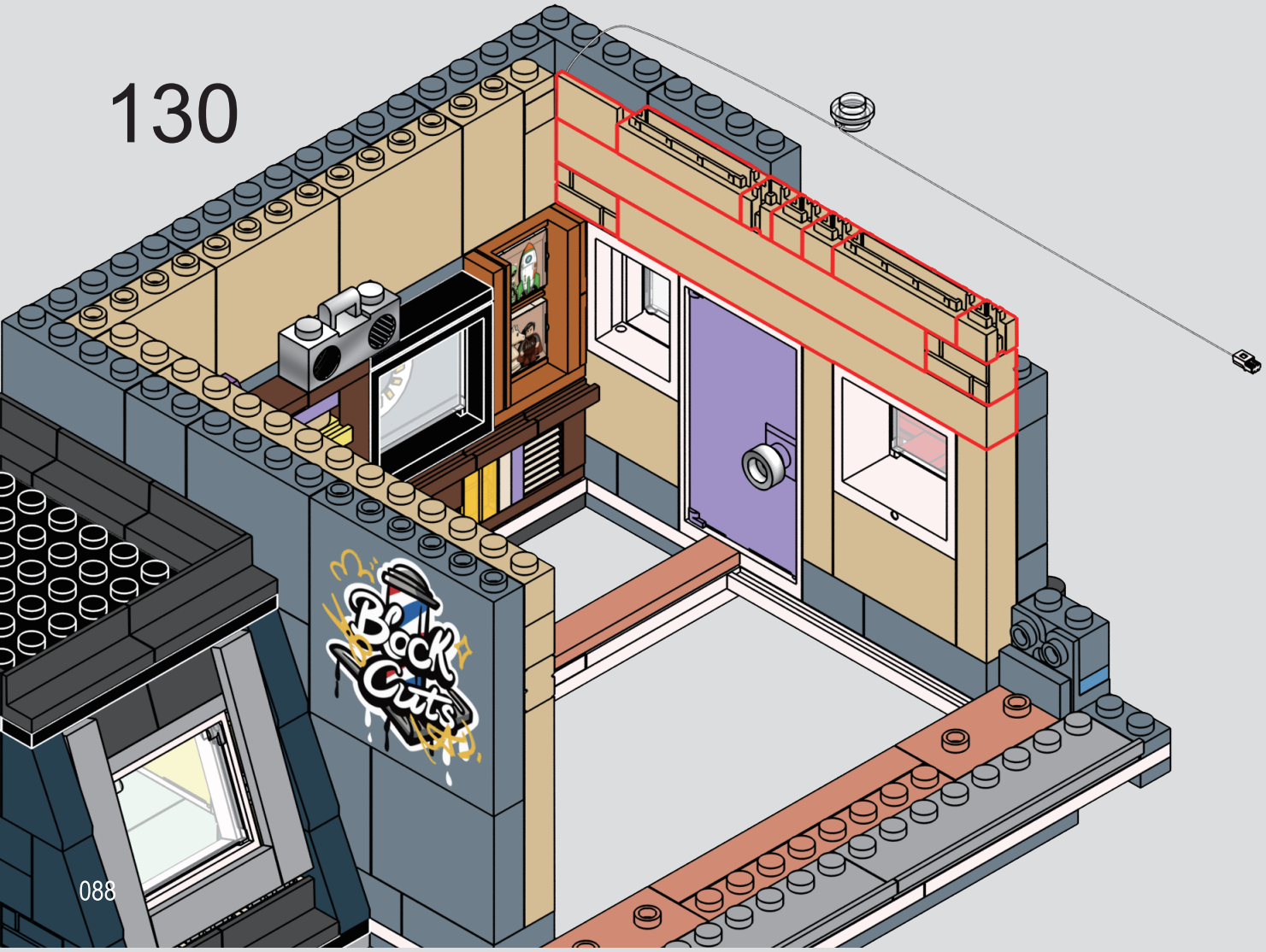

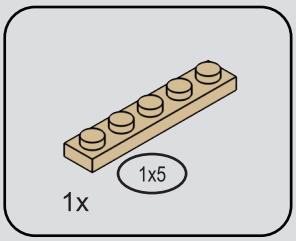

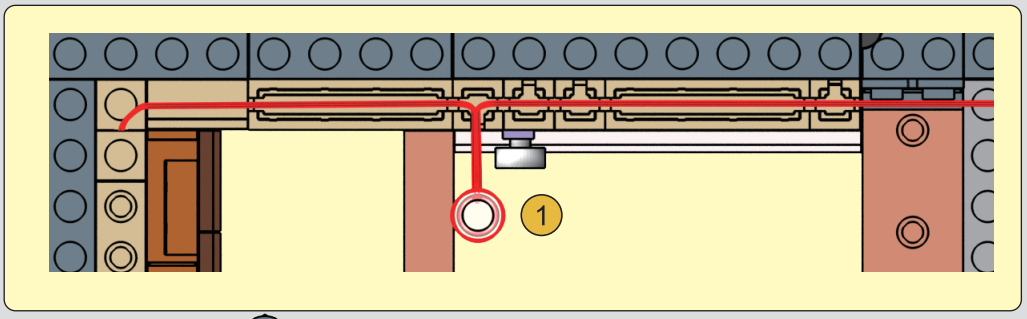

131

1



2



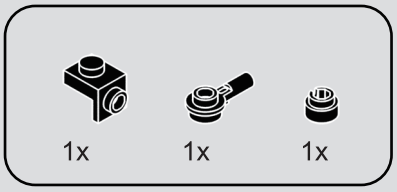

132

1

2



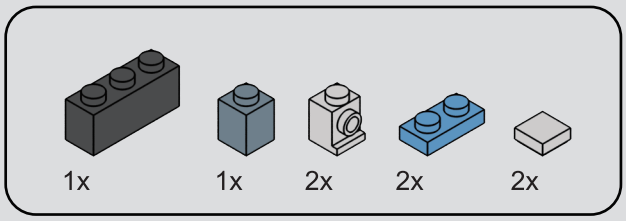

133

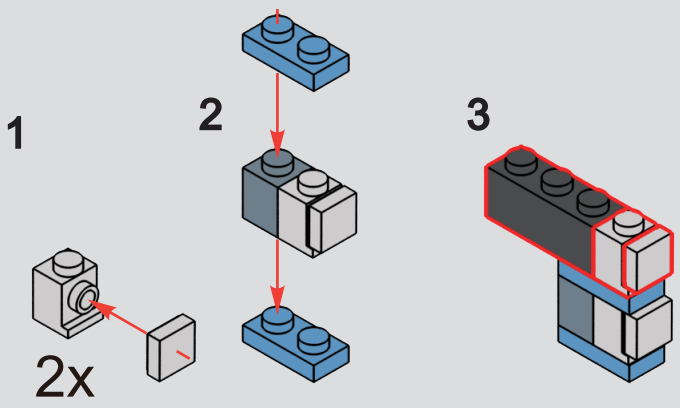

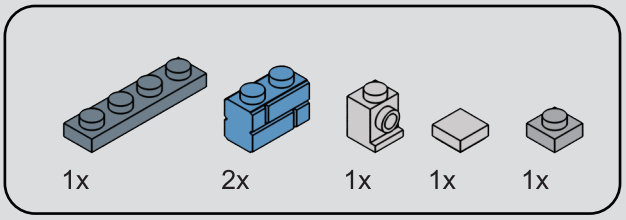

134

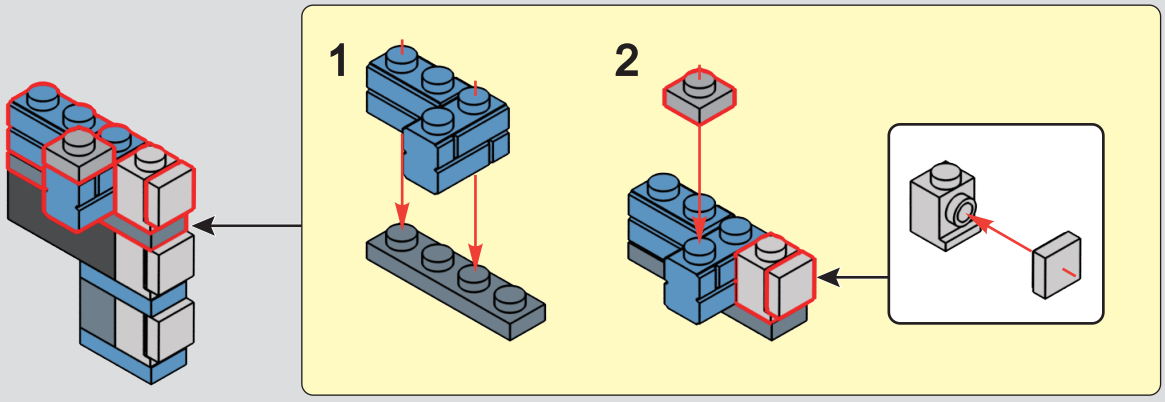

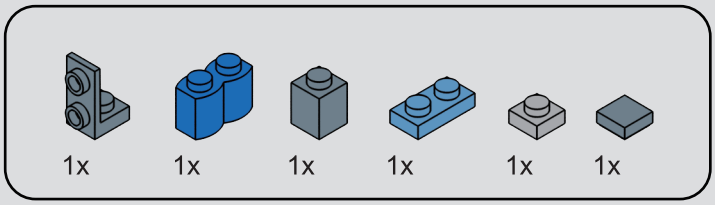

135

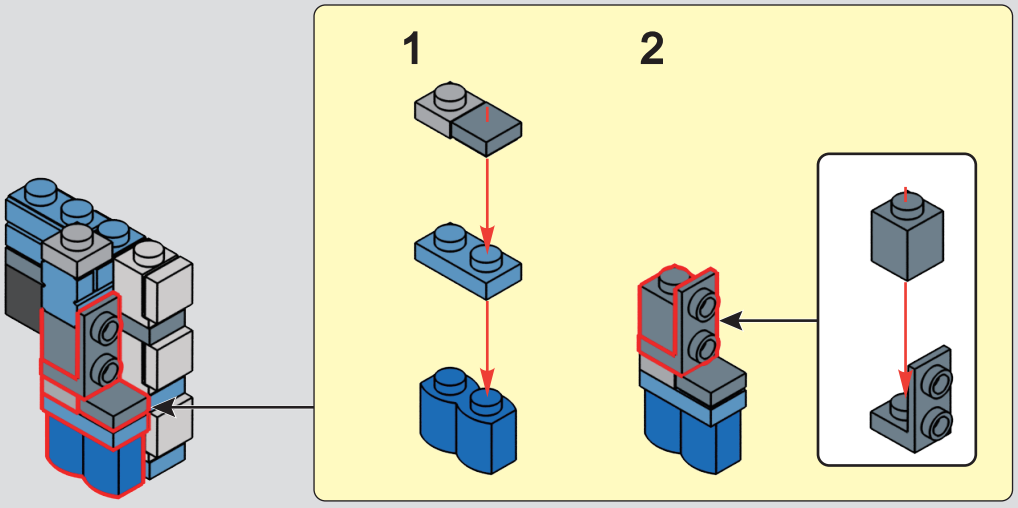

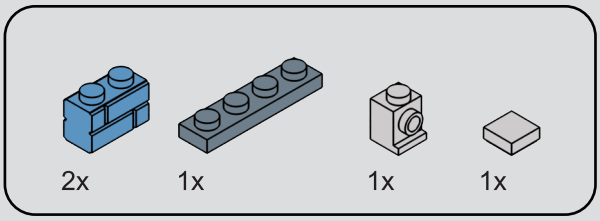

136

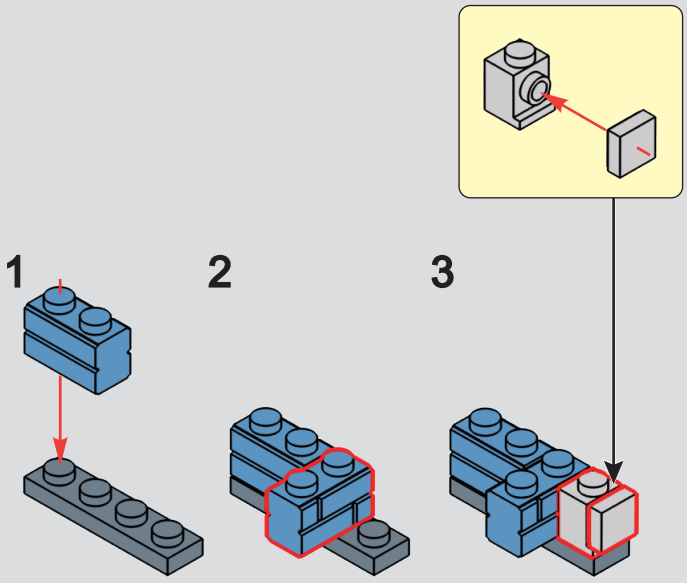

137

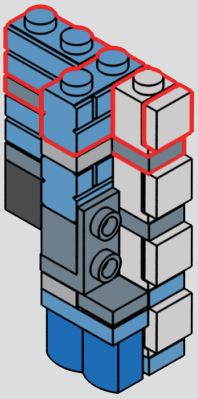

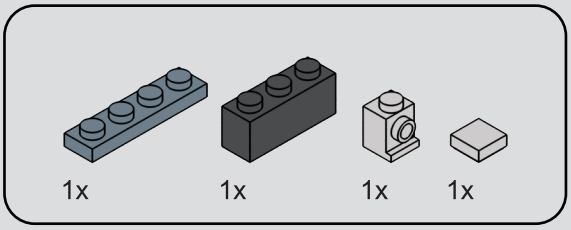

138

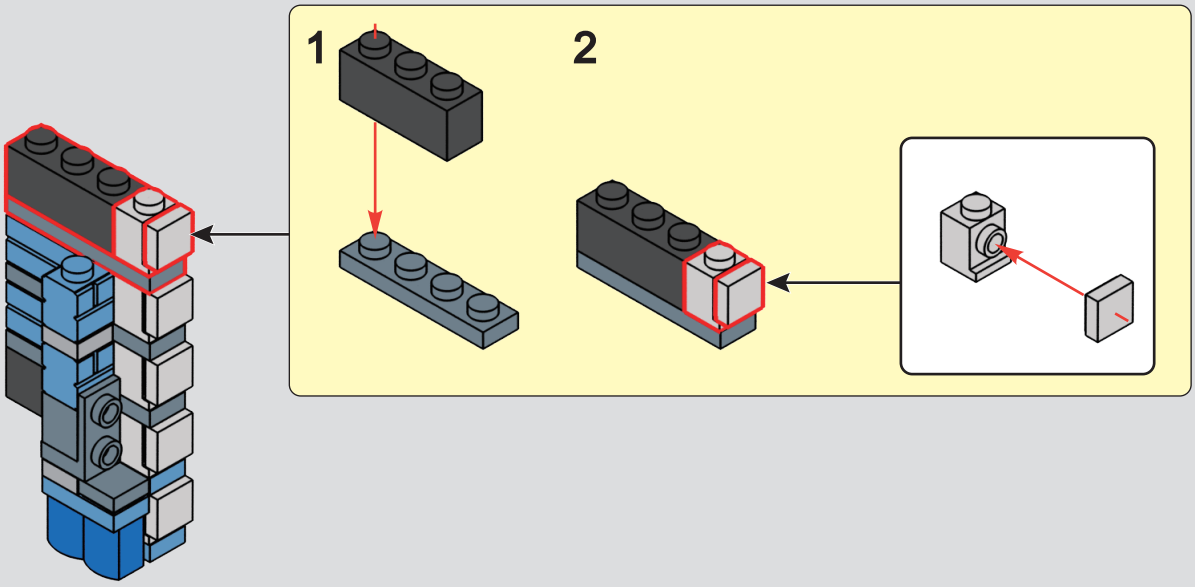

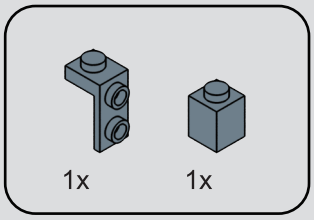

139

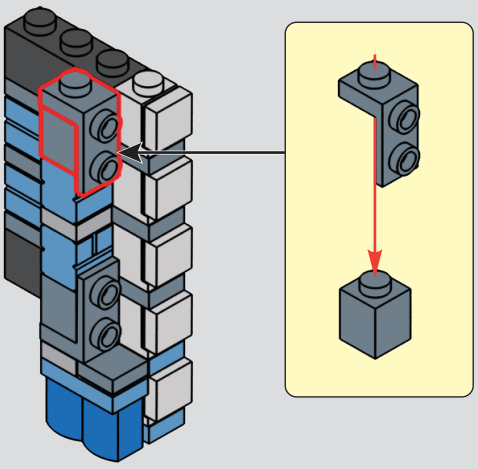

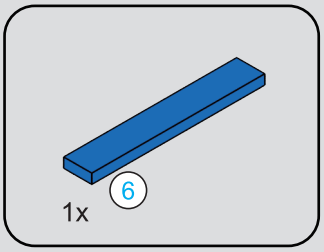

140

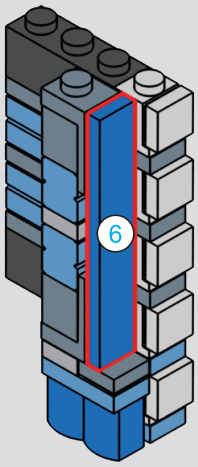



141



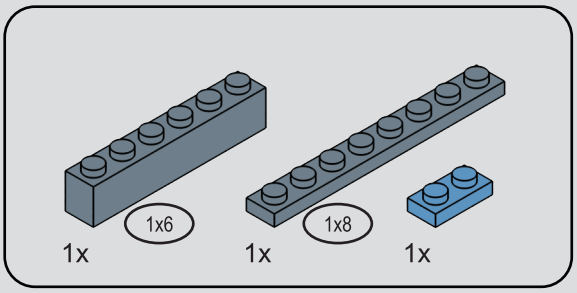

142

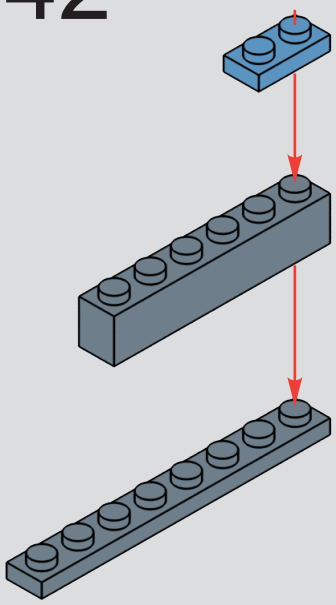

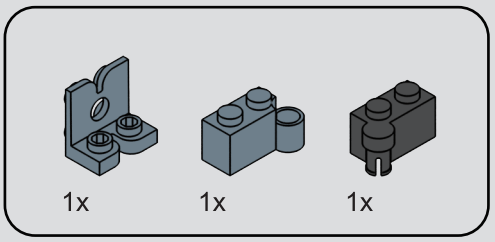

143

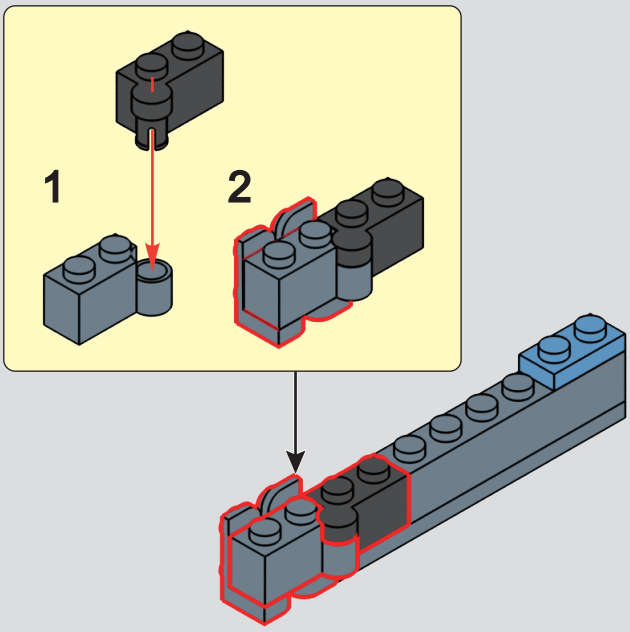

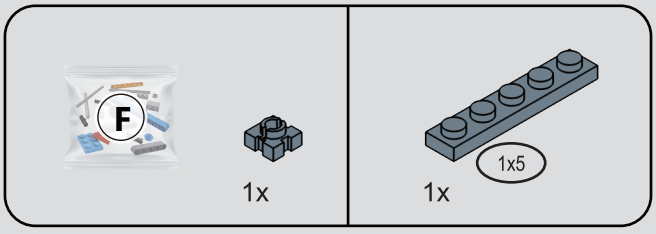

144

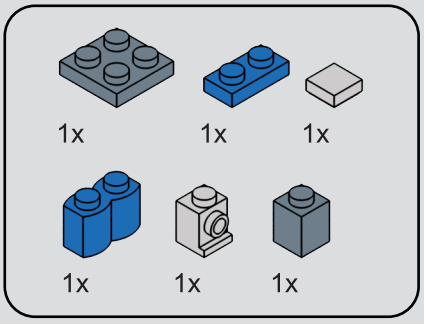

145

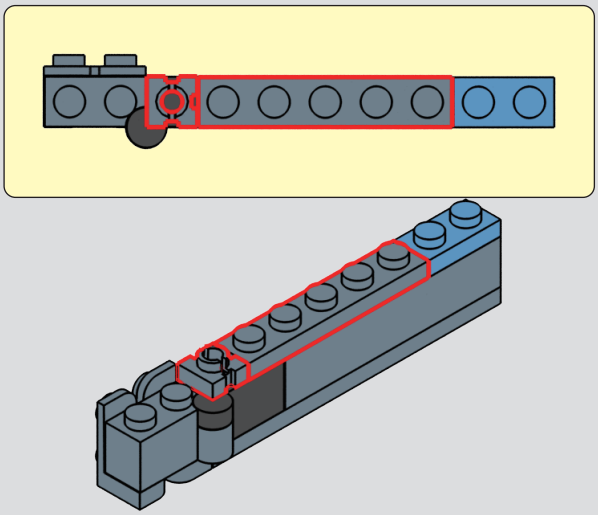

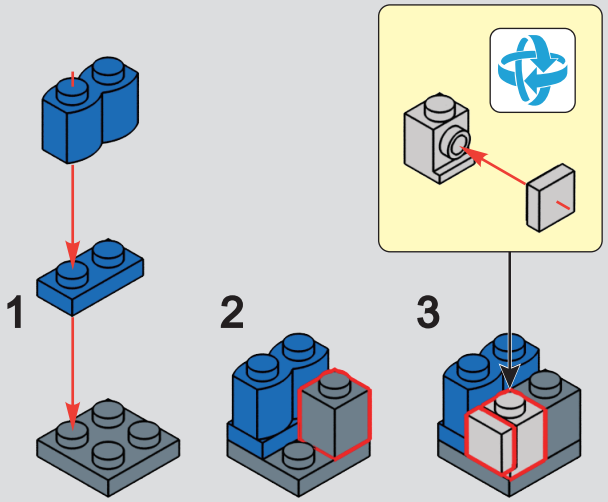

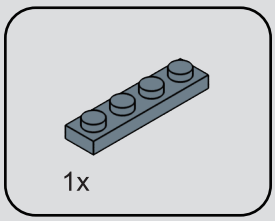

147

146

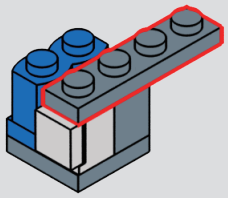

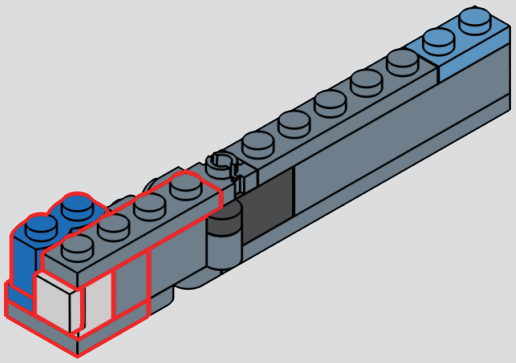

148

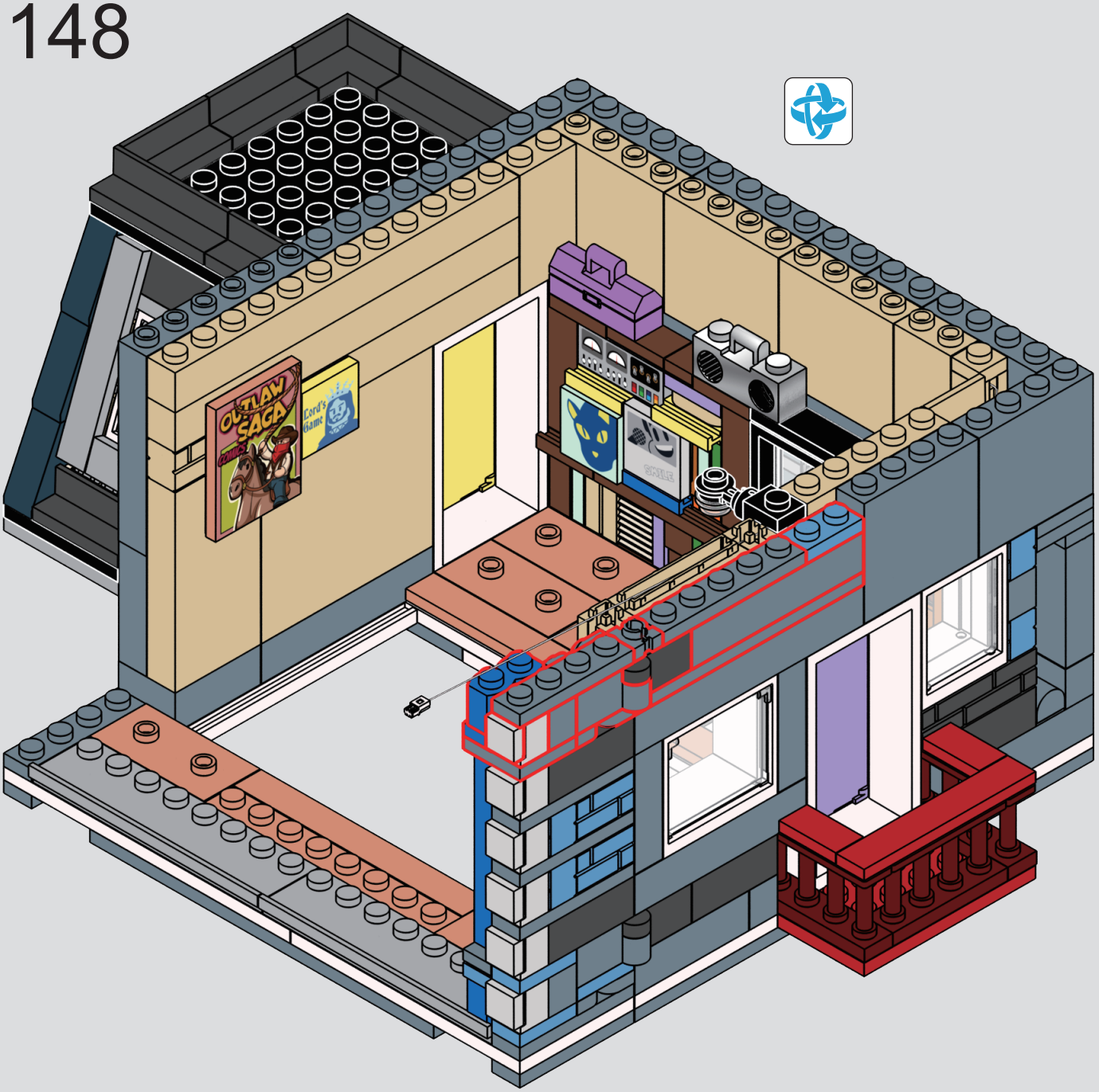

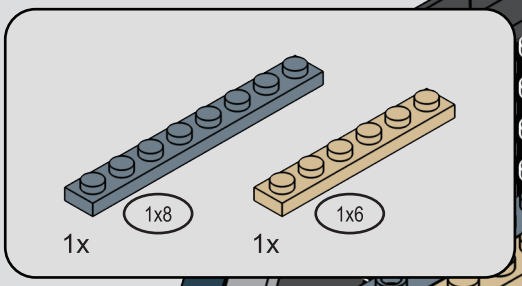

149

1

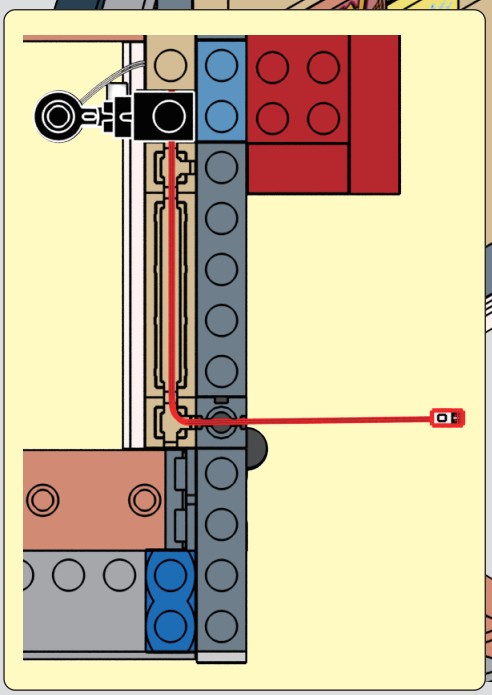

2



150

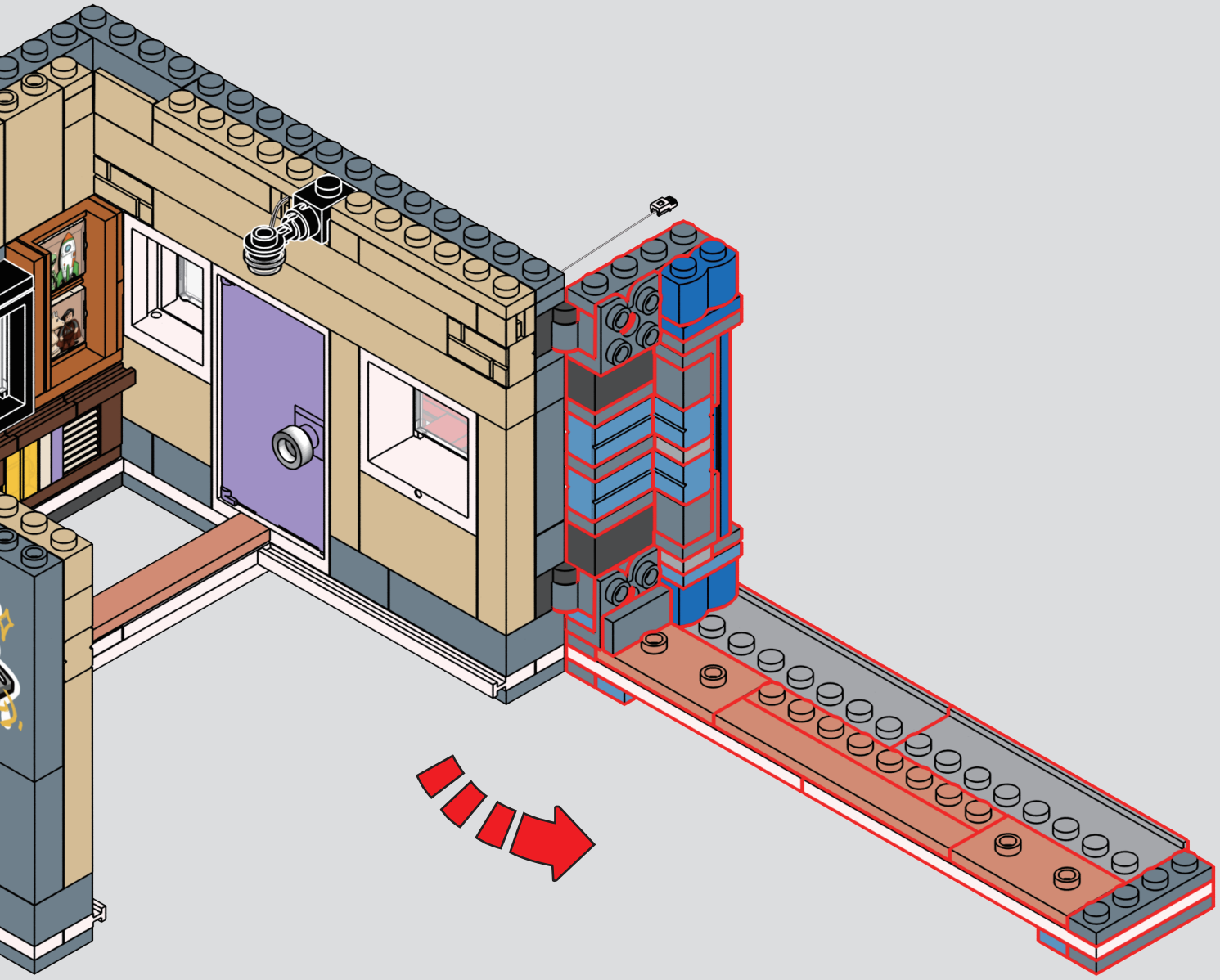

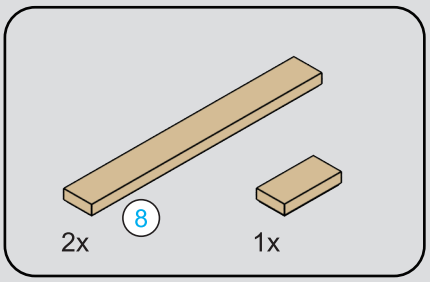



151

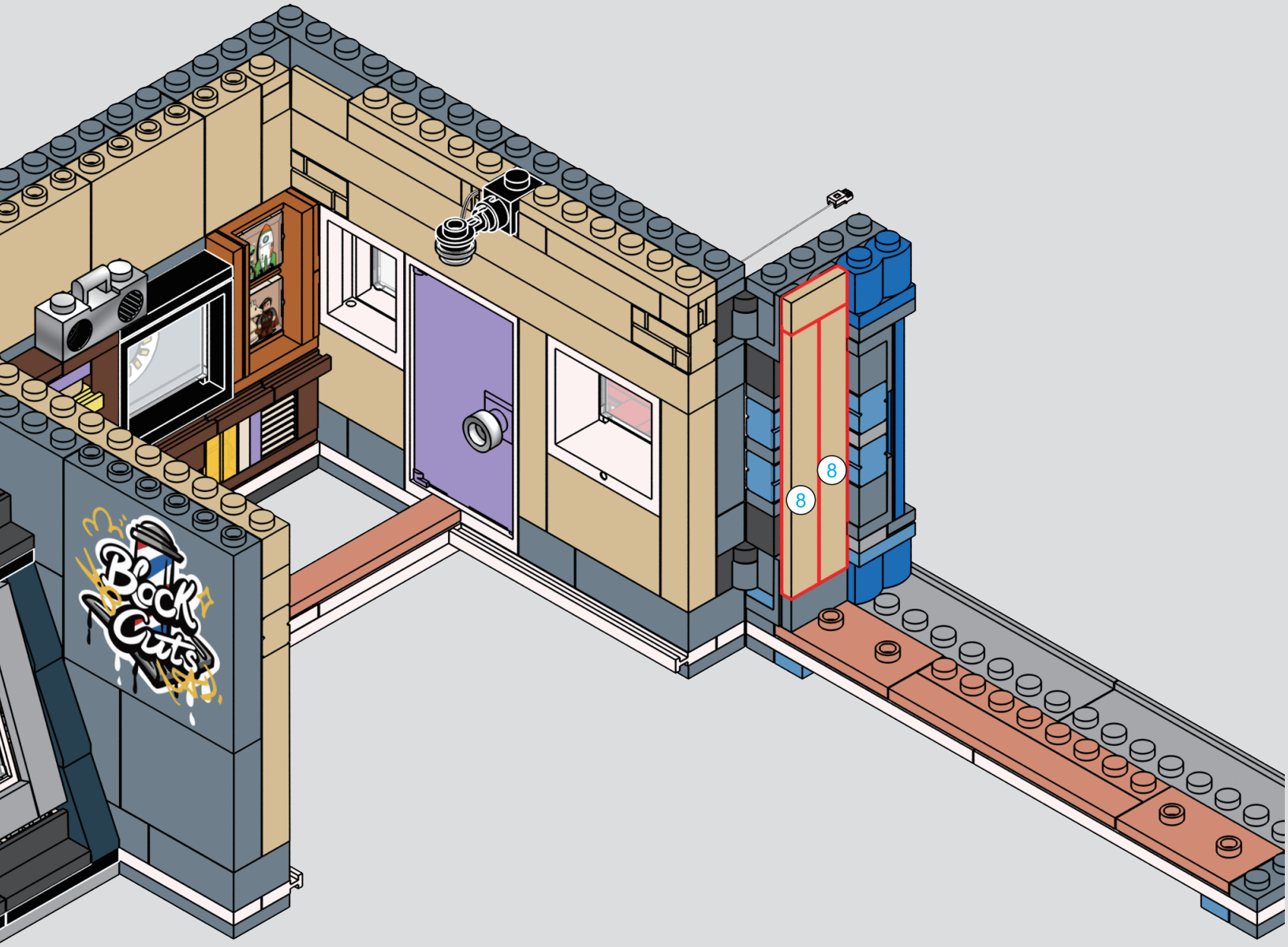

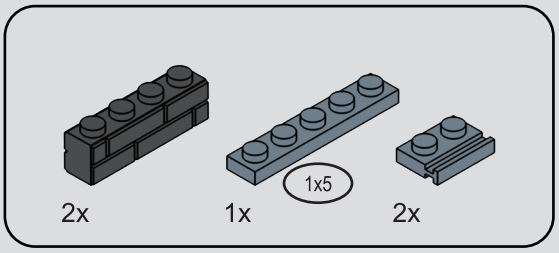

152

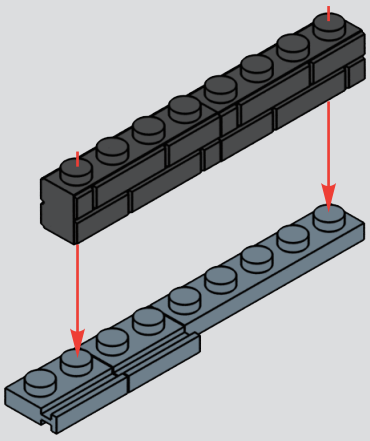

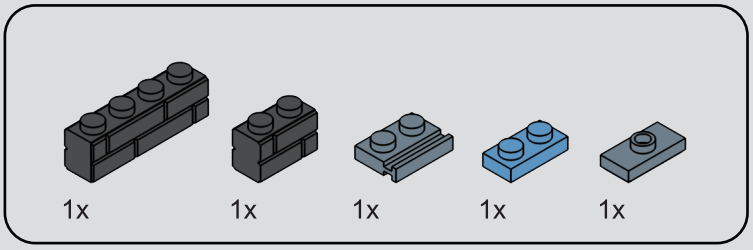

153

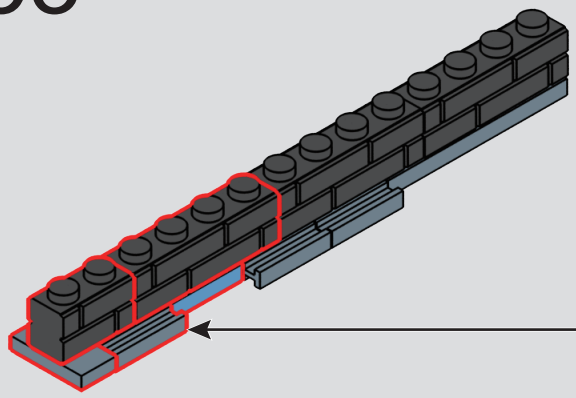

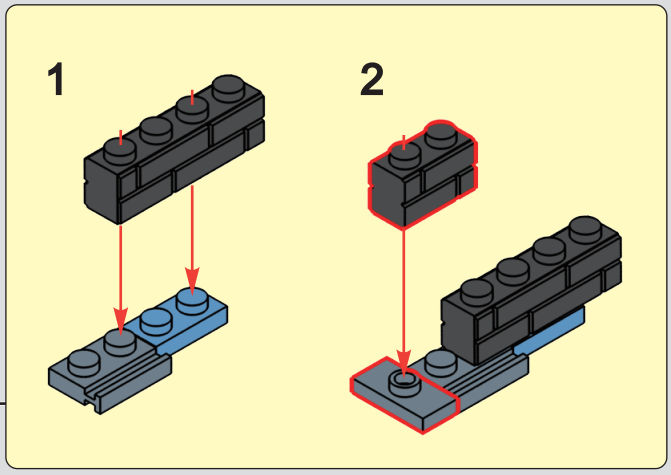

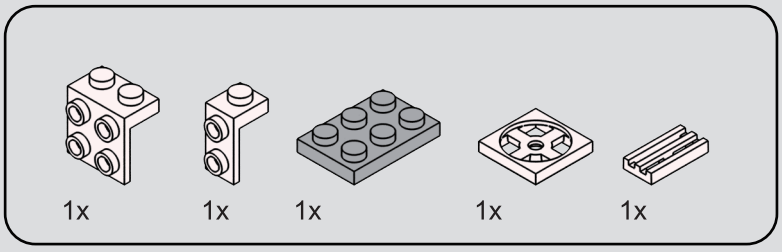

154

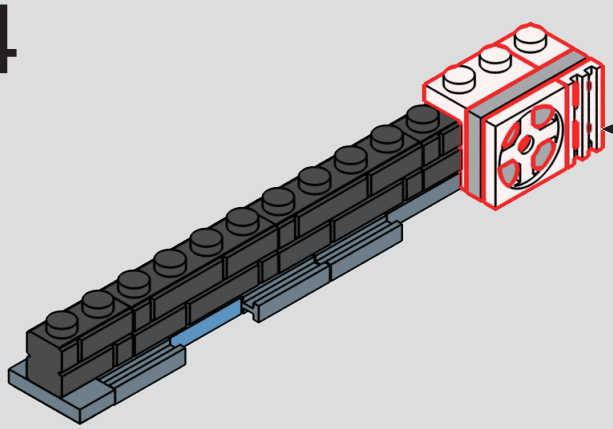

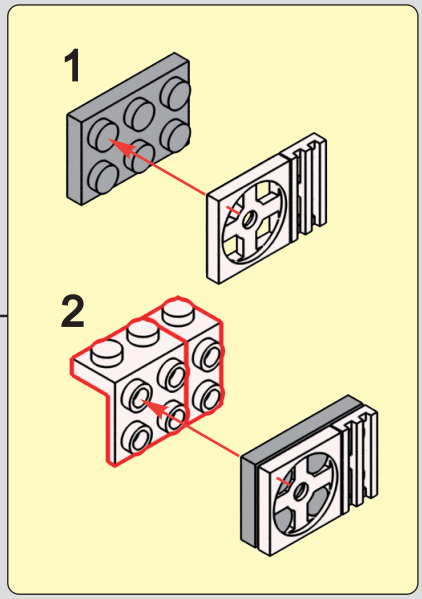

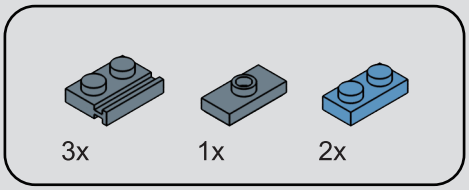

155

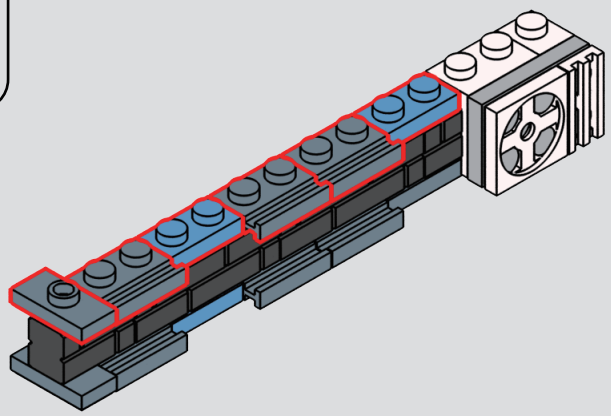

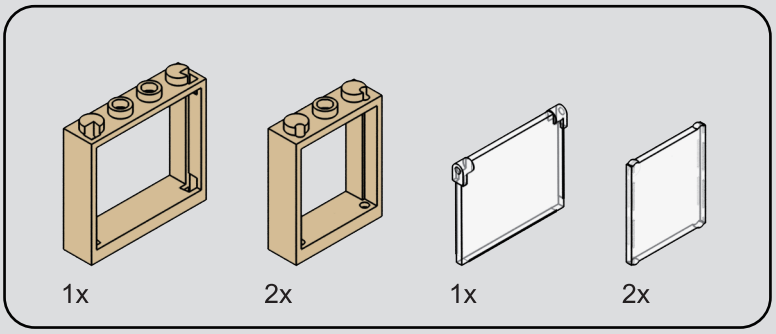

156

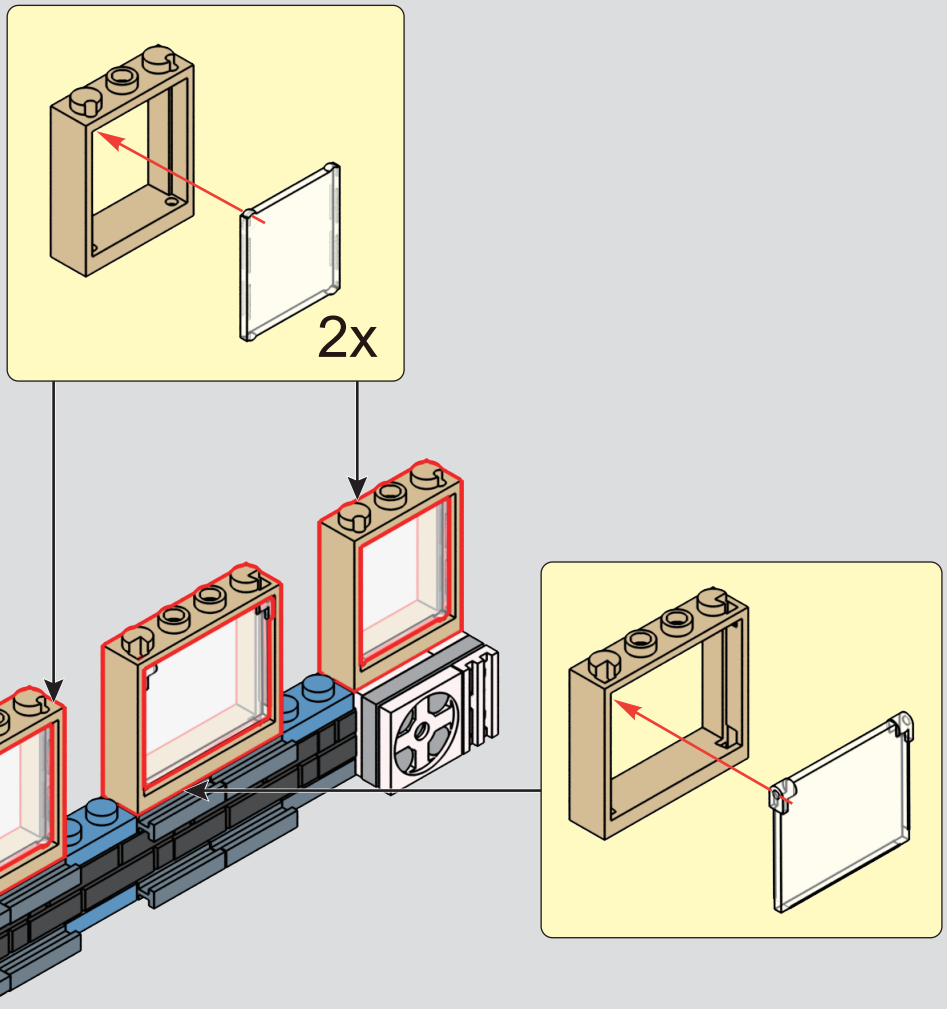

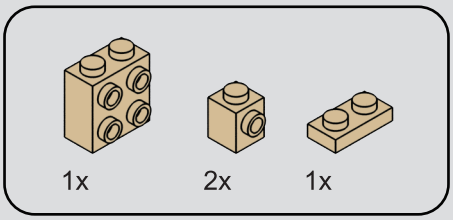

157

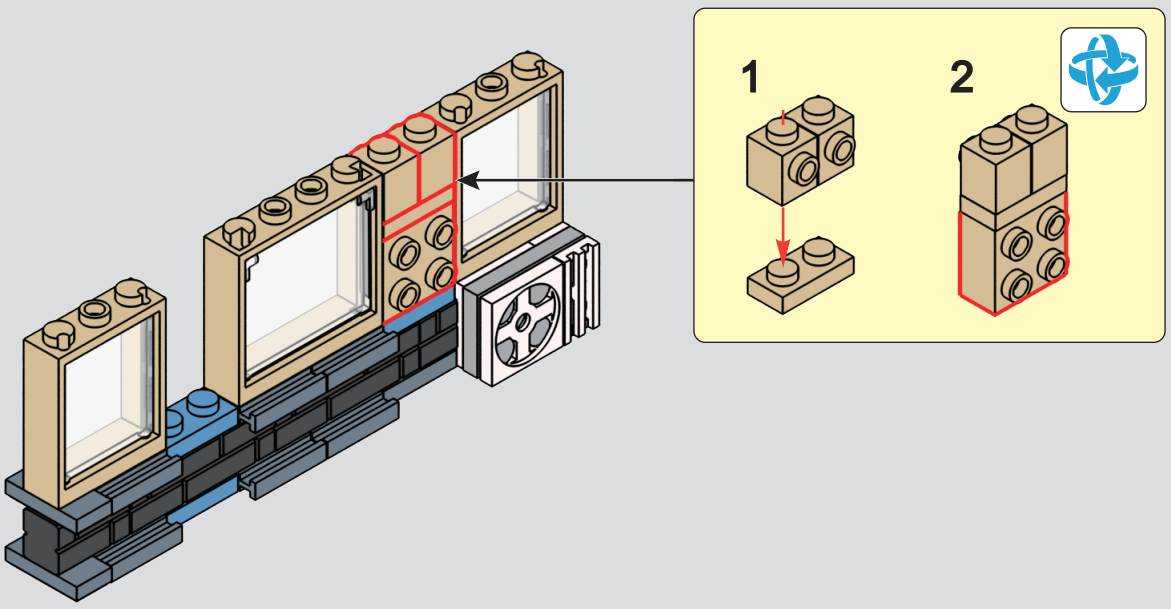

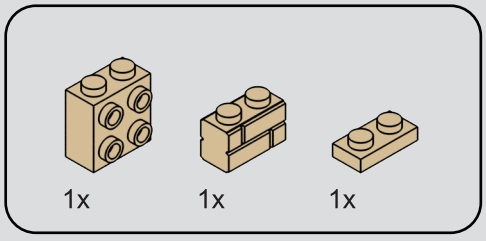

158

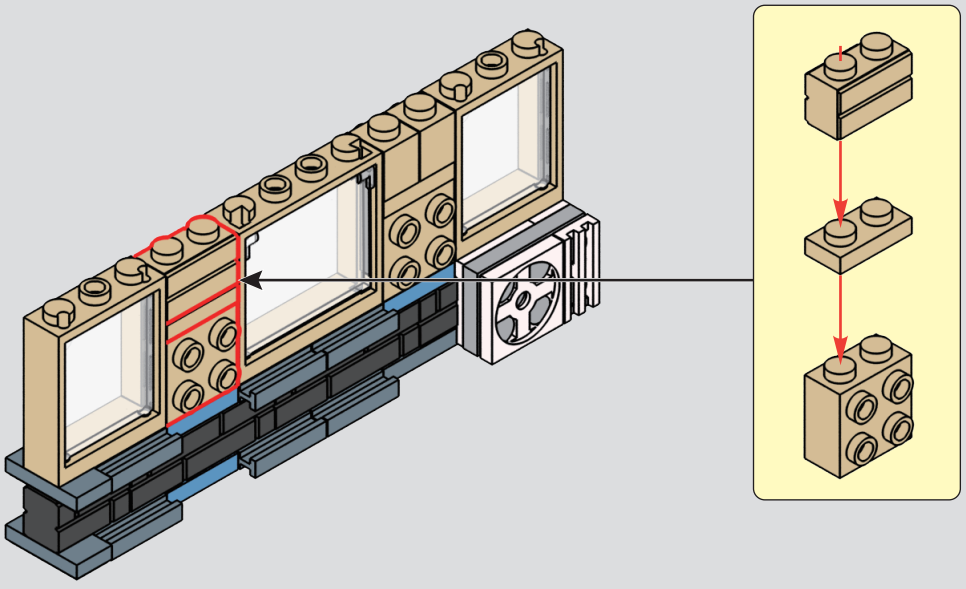

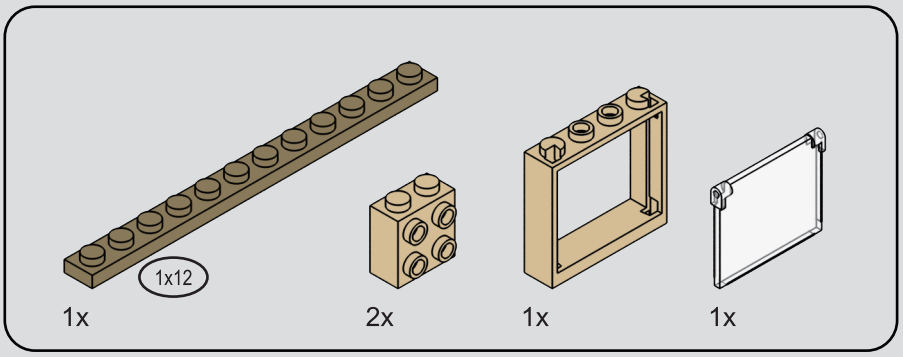

159

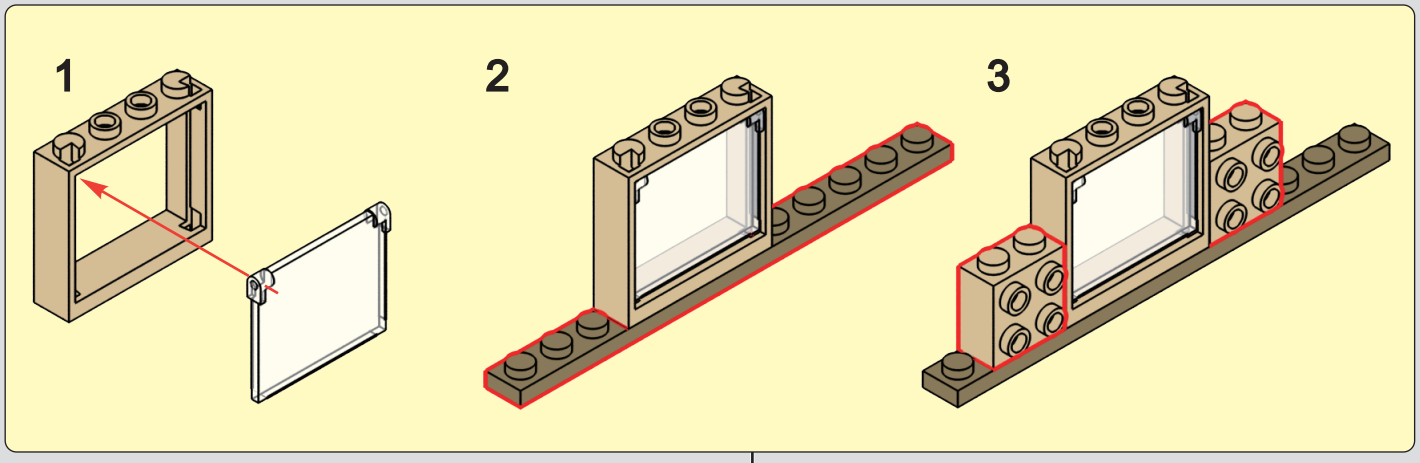

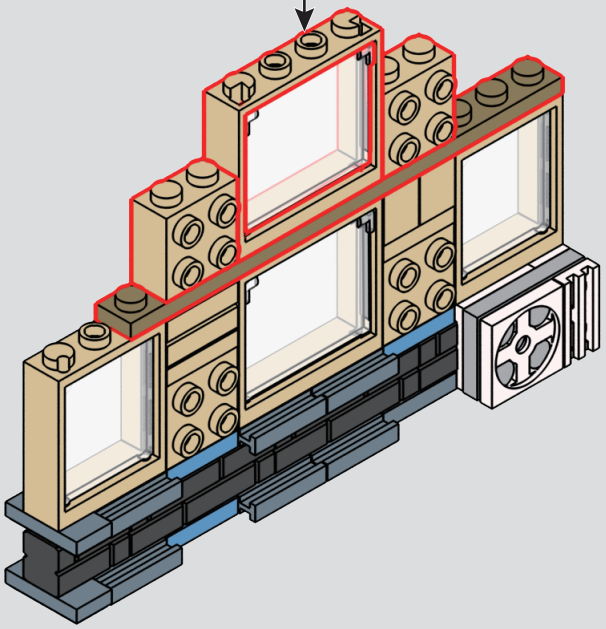

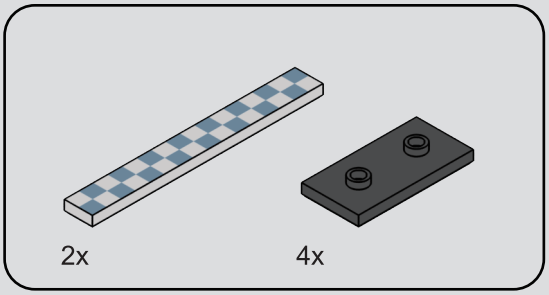

160

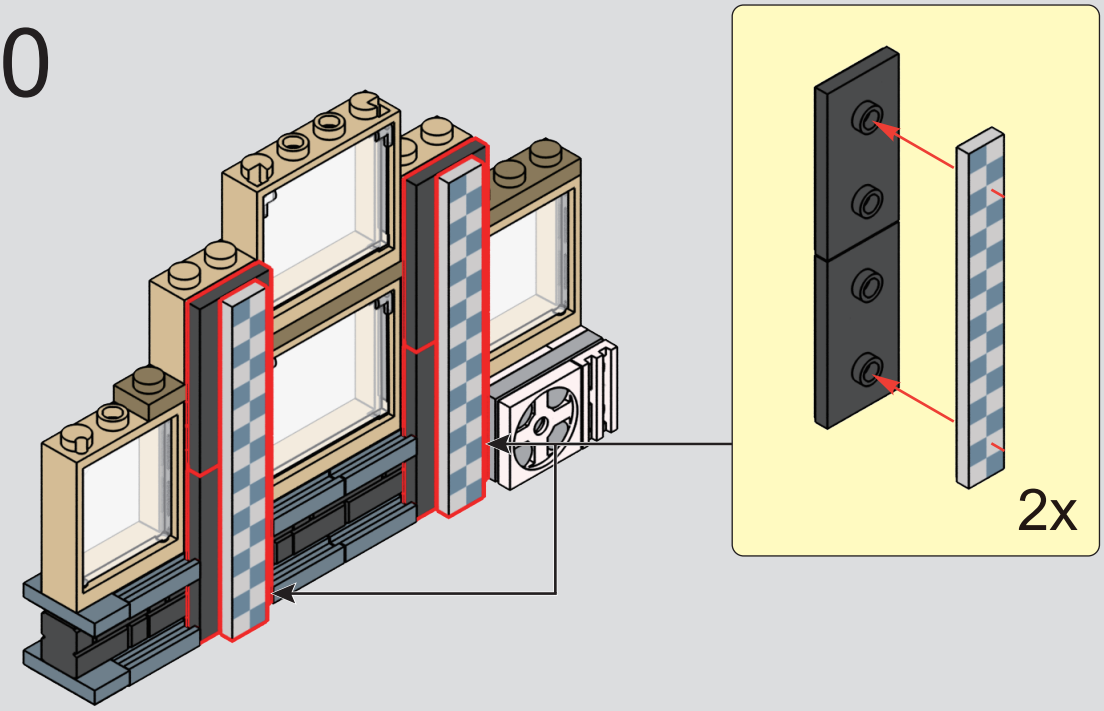

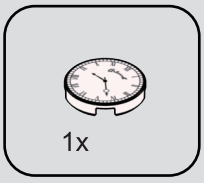

161

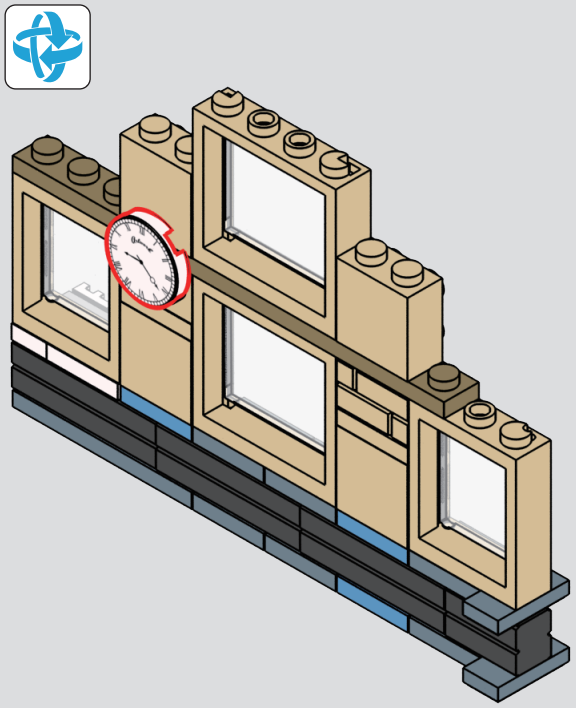

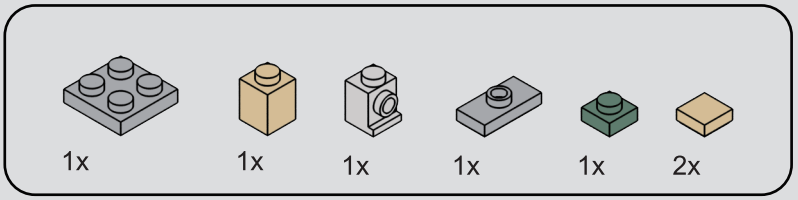

162

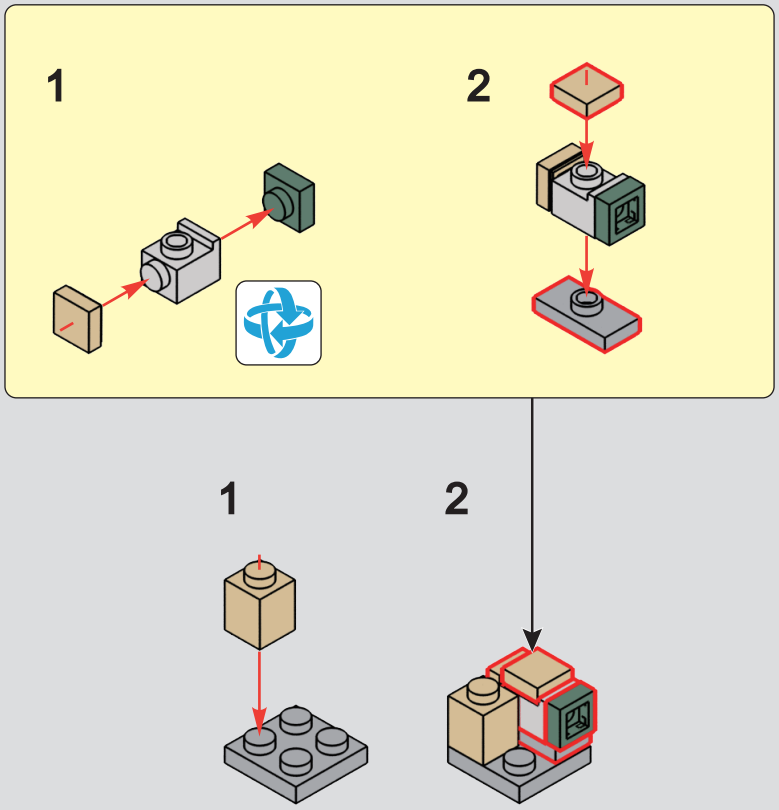

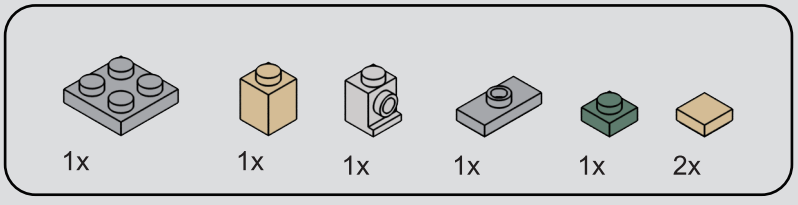

163

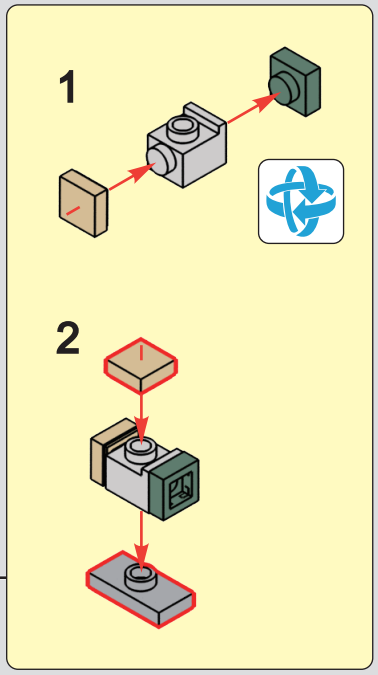

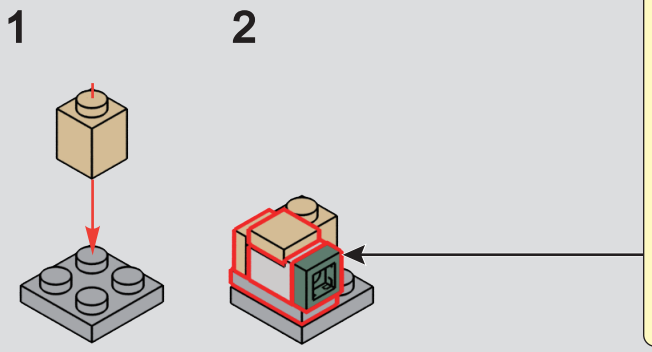

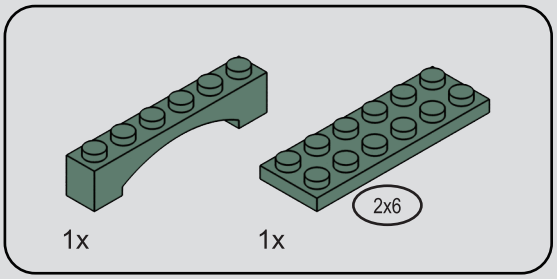

164

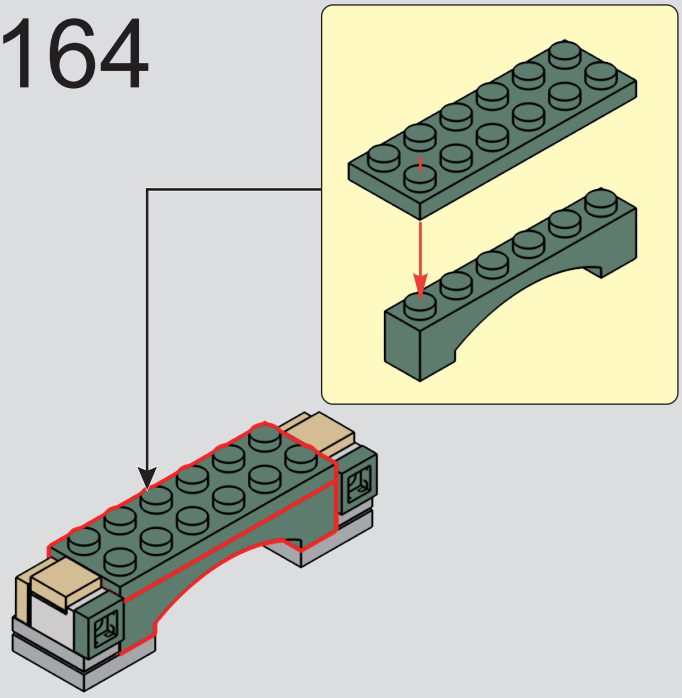

165

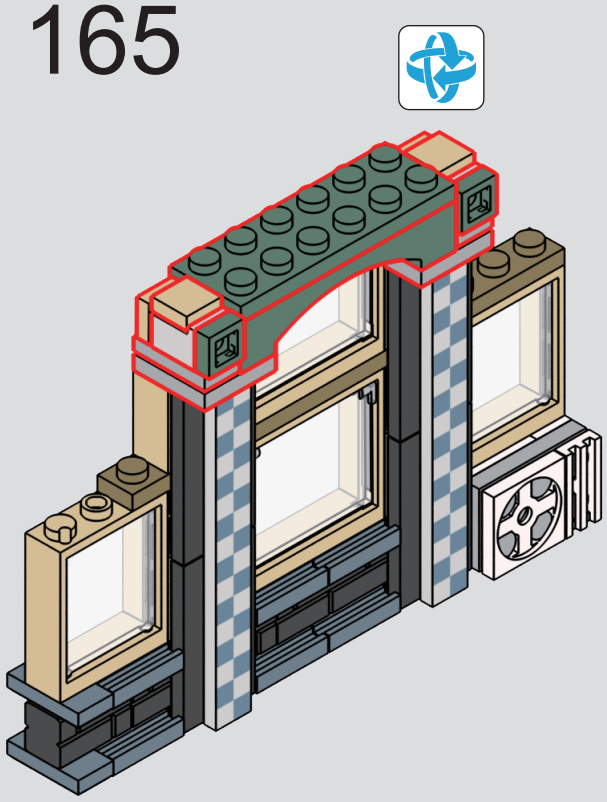

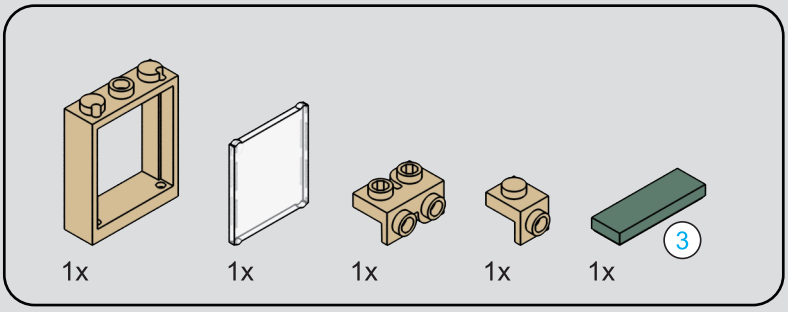

166

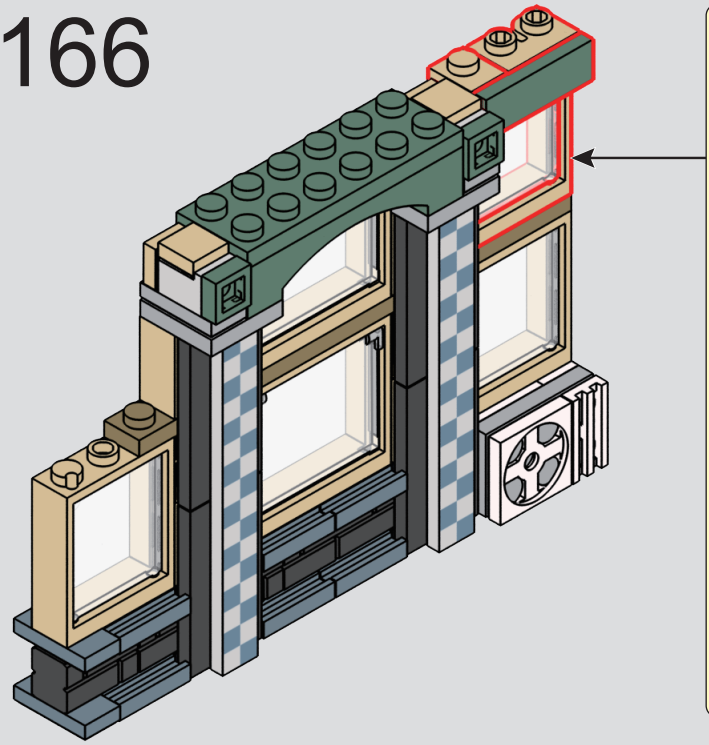

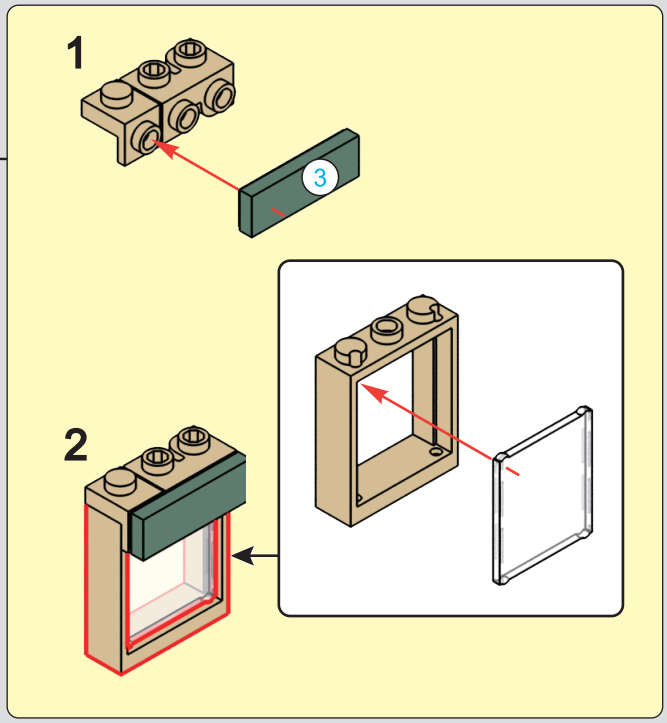

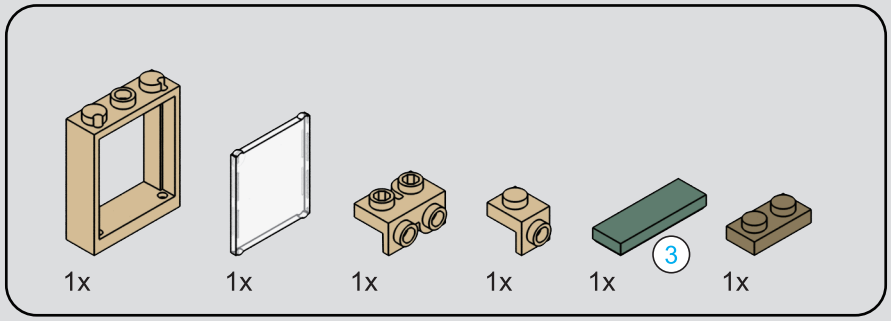

167

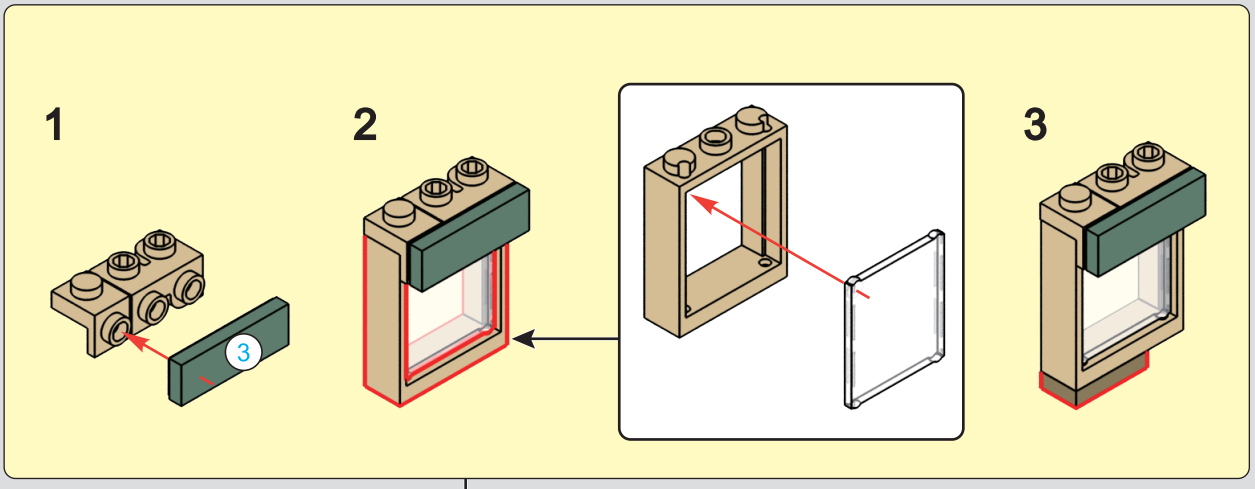

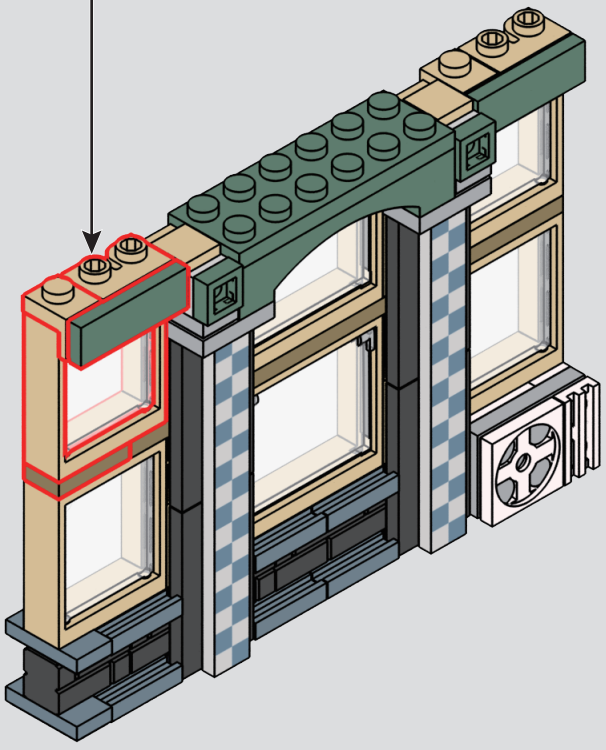

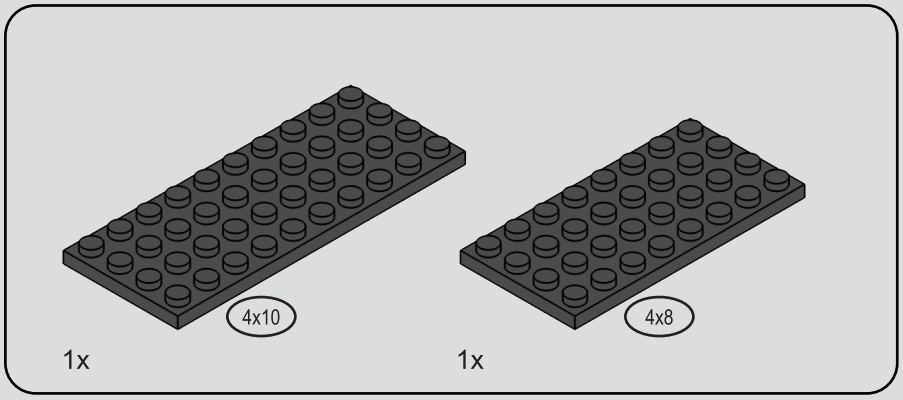

168

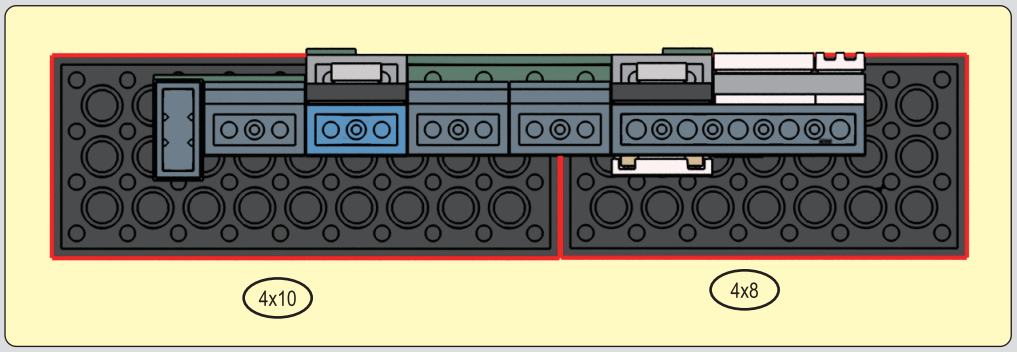

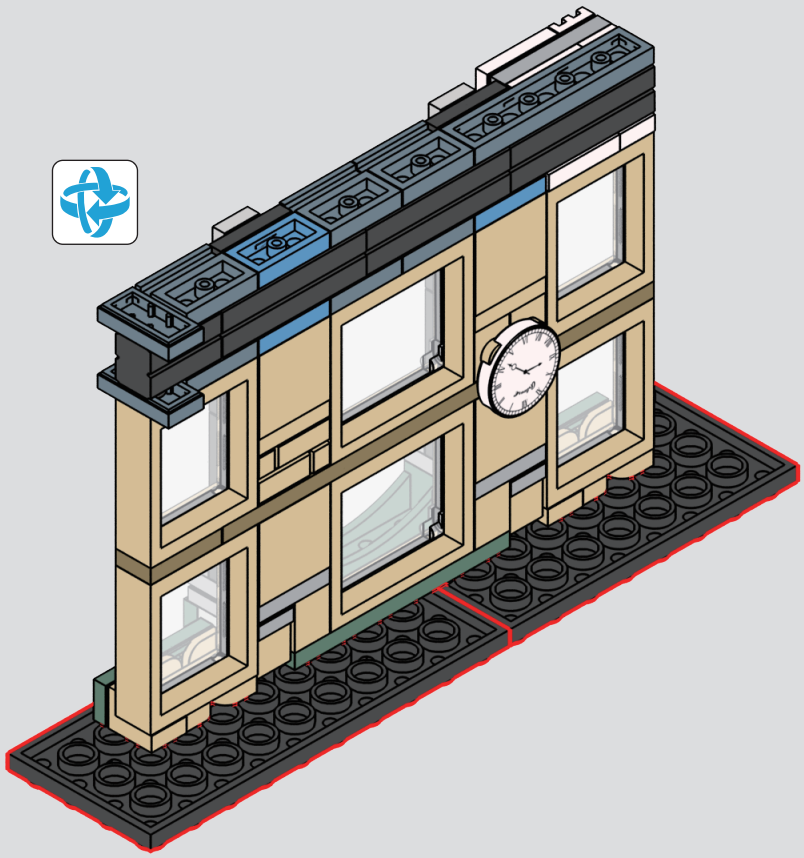

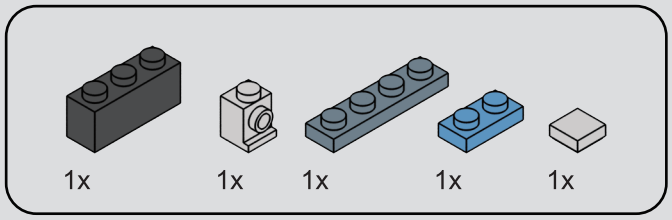

169

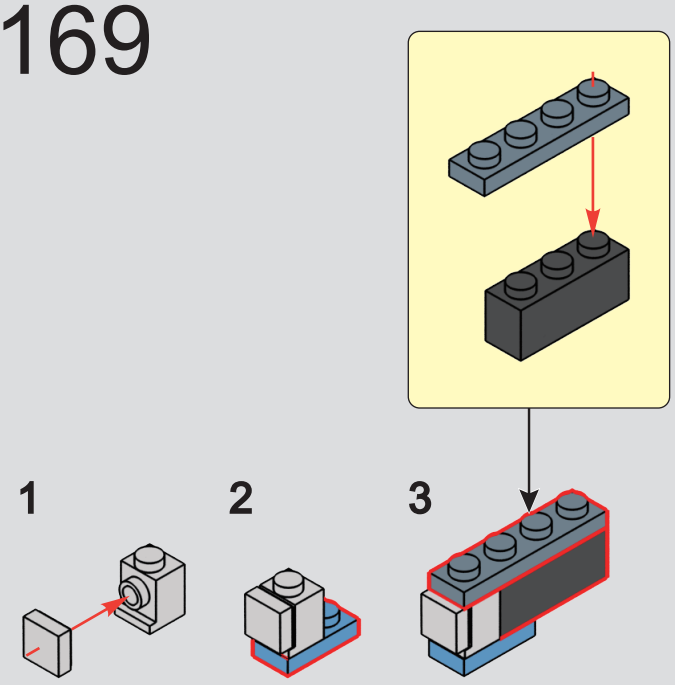

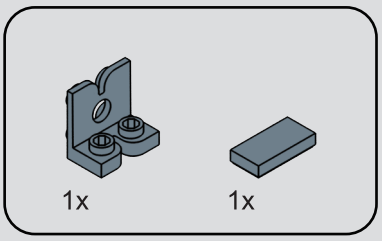

170

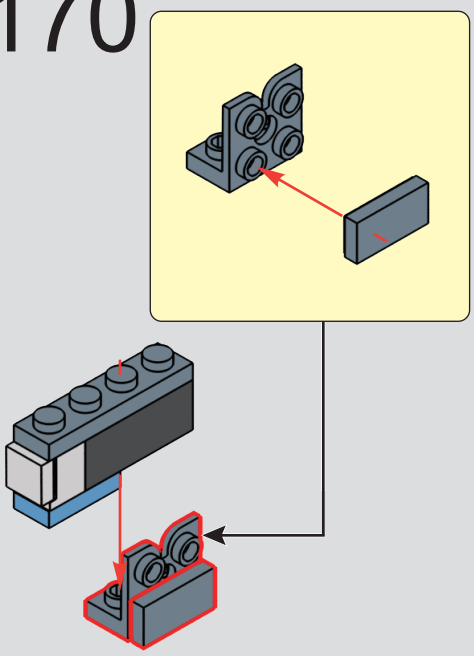

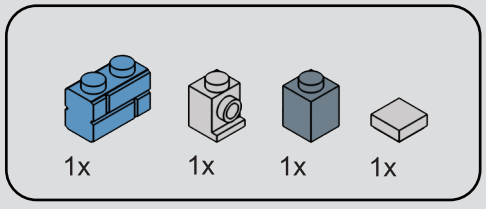

171

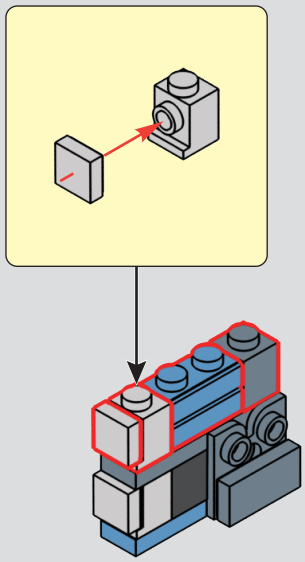

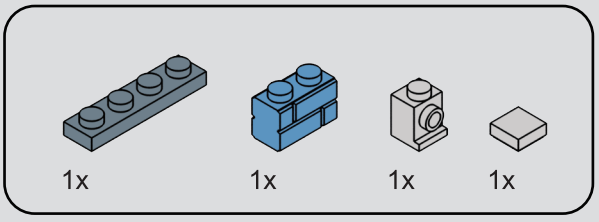

172

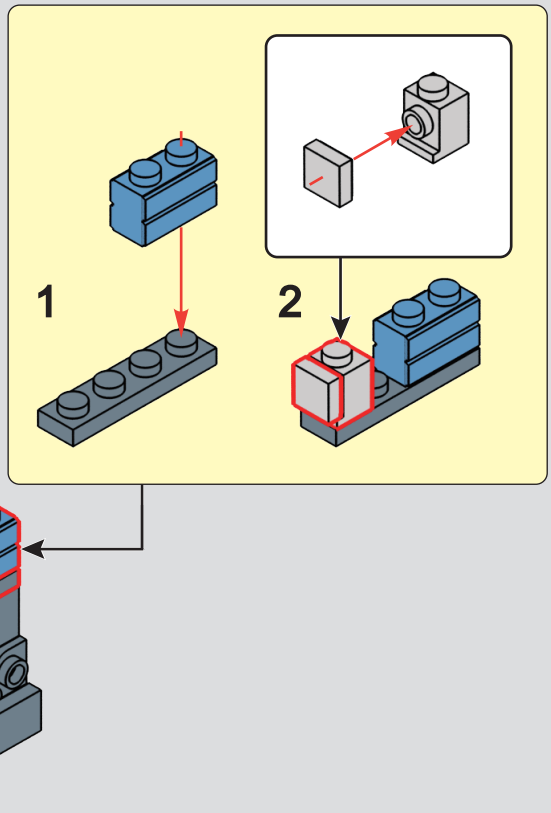

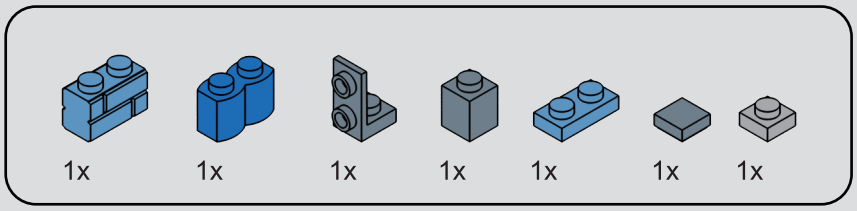

173

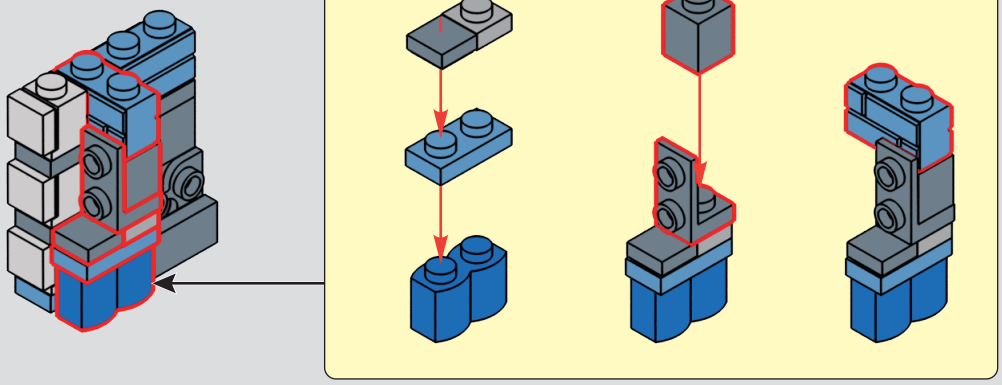

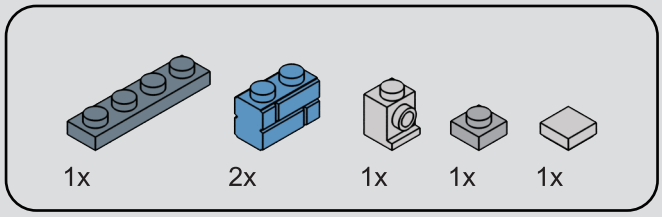

174

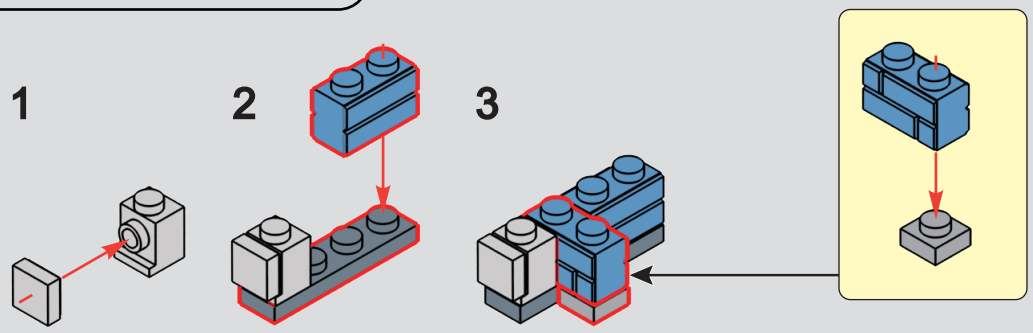

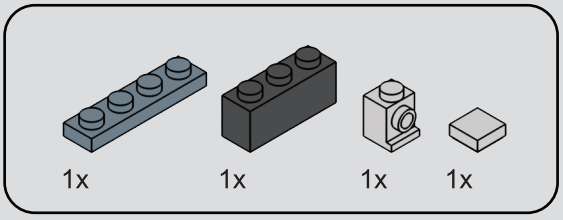

175

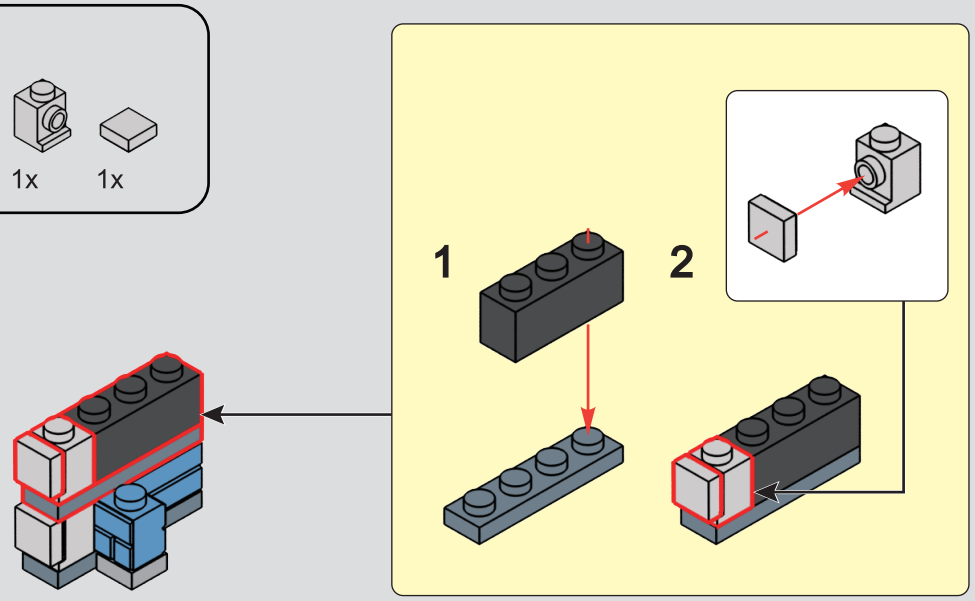

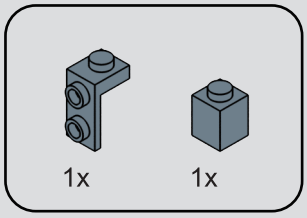

176

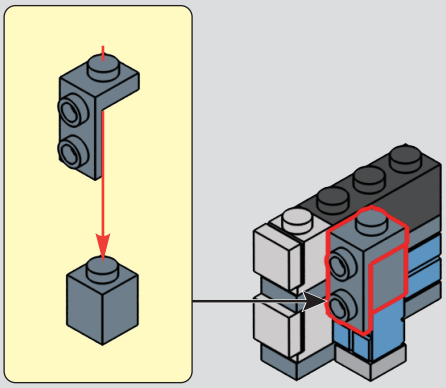

177

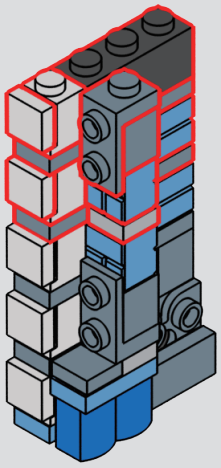

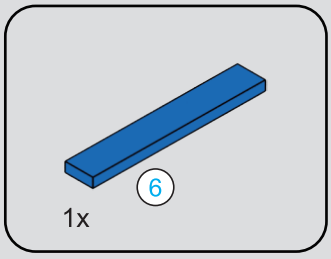

178

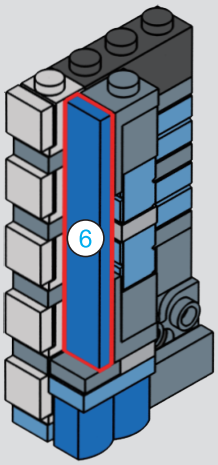



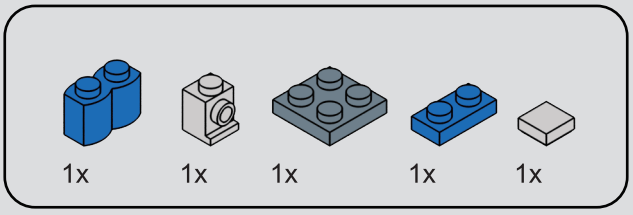

179

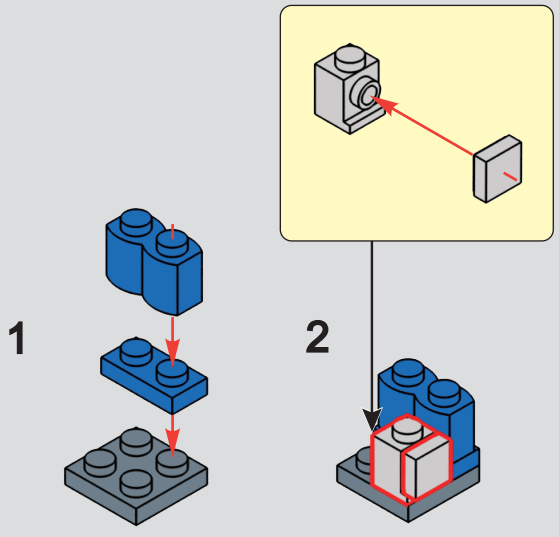

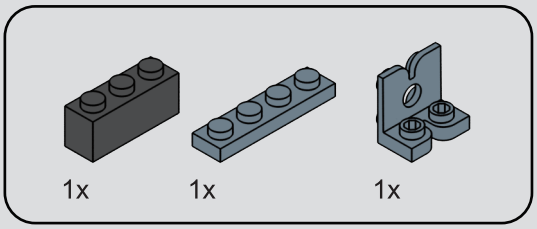

180

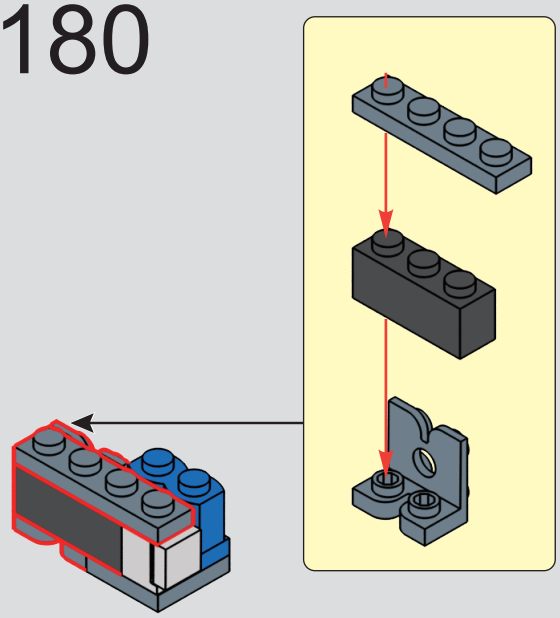

181

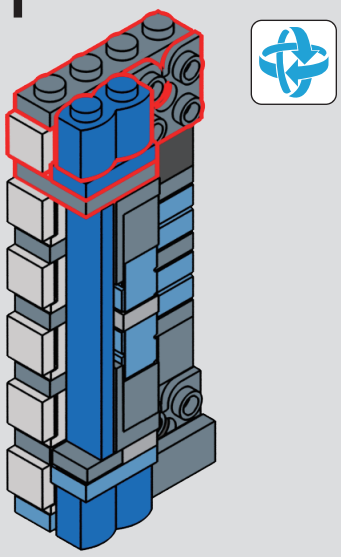

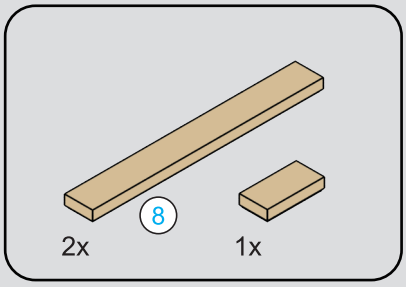

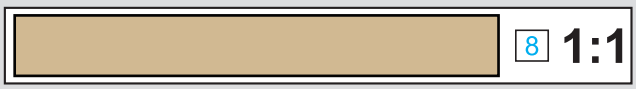

182

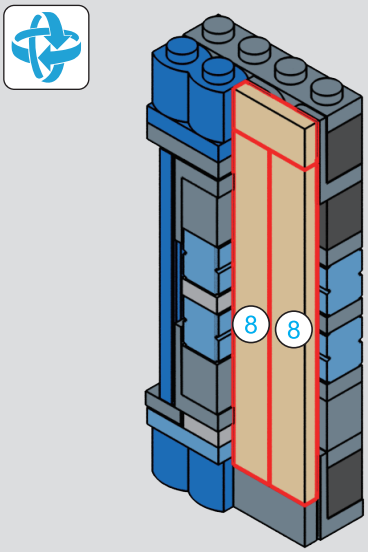

183

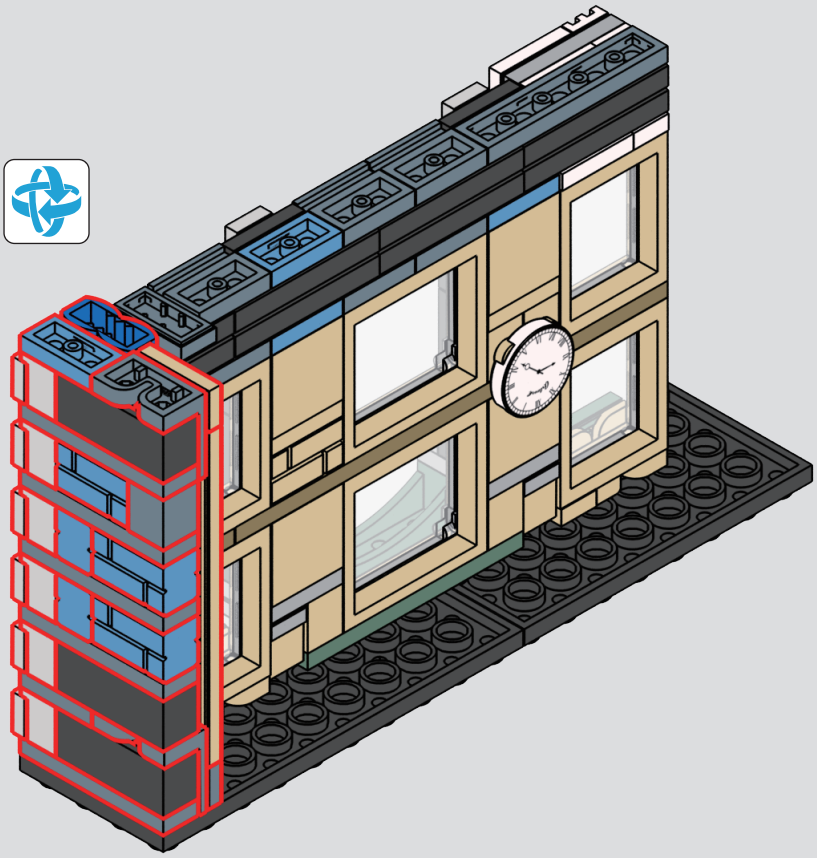

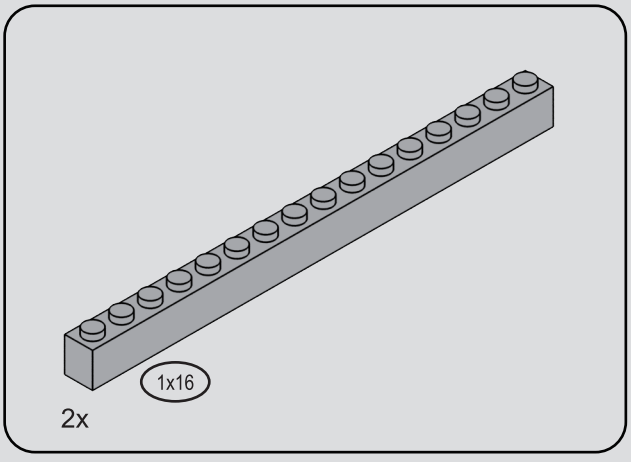

184

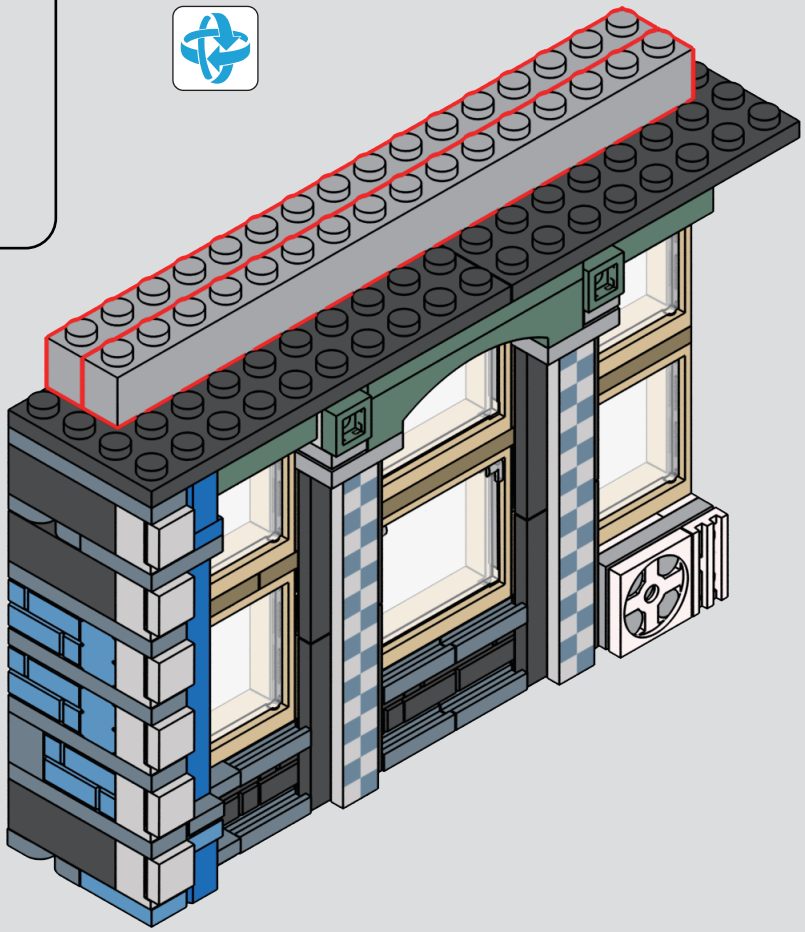

185

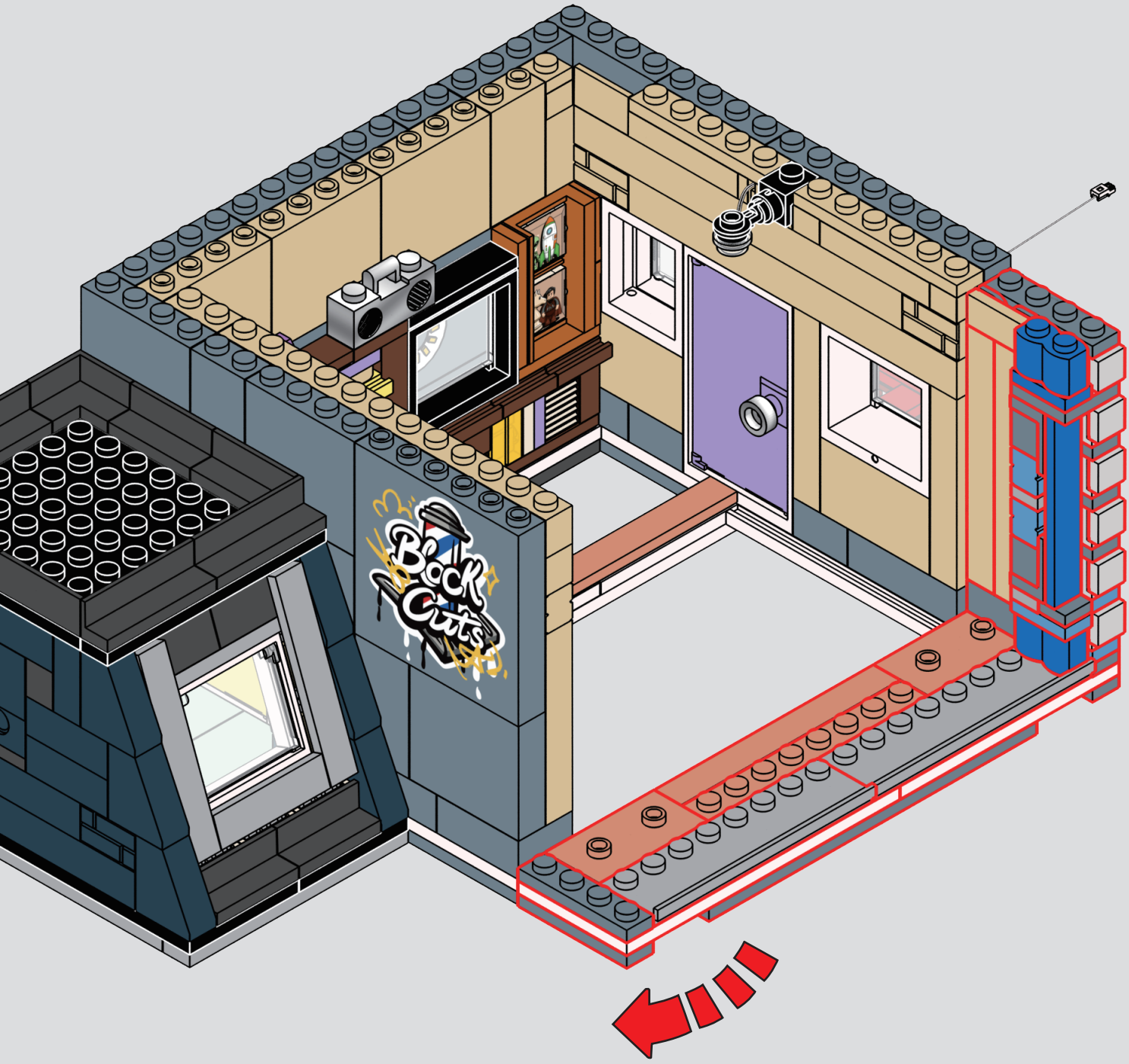

186

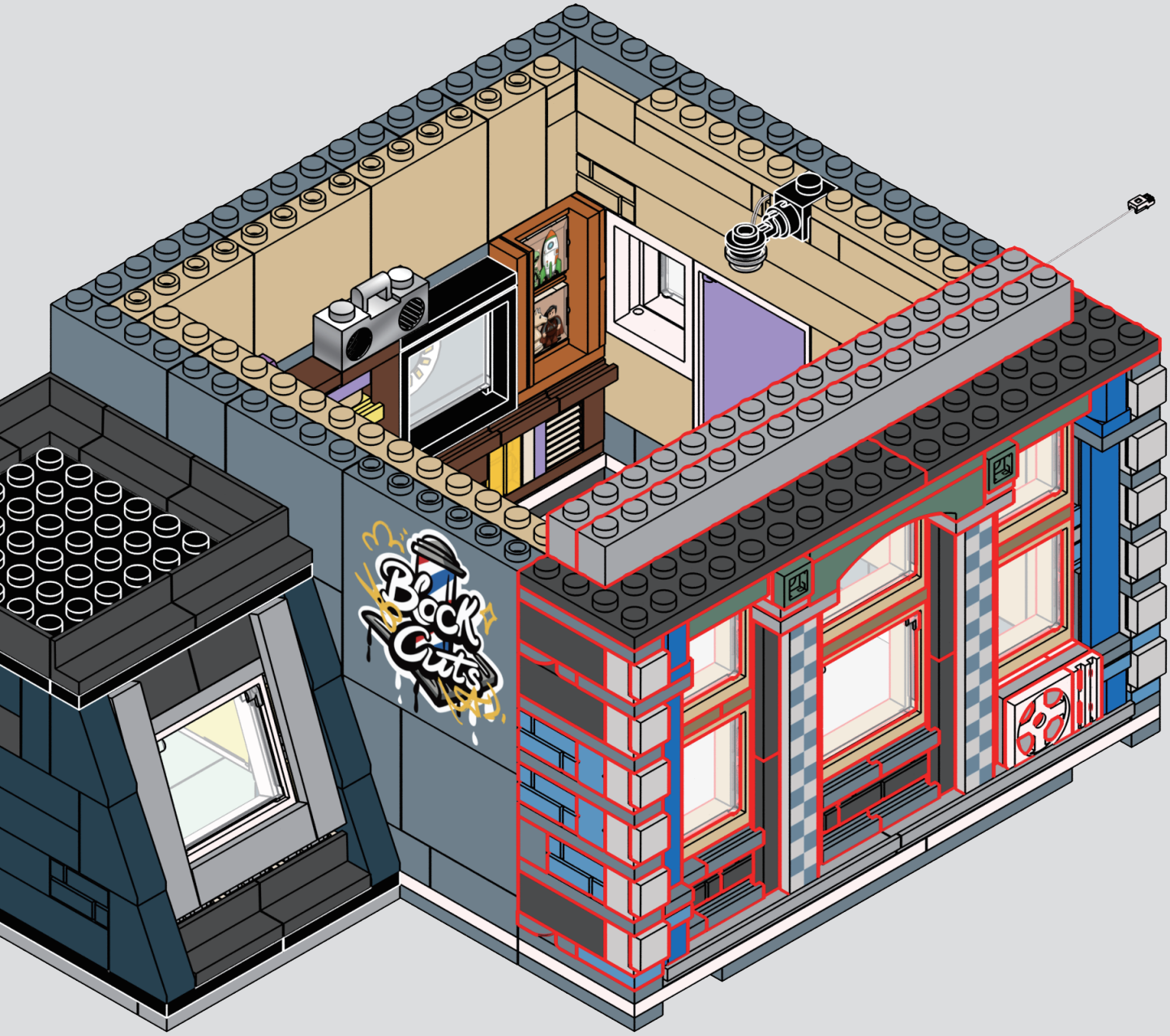

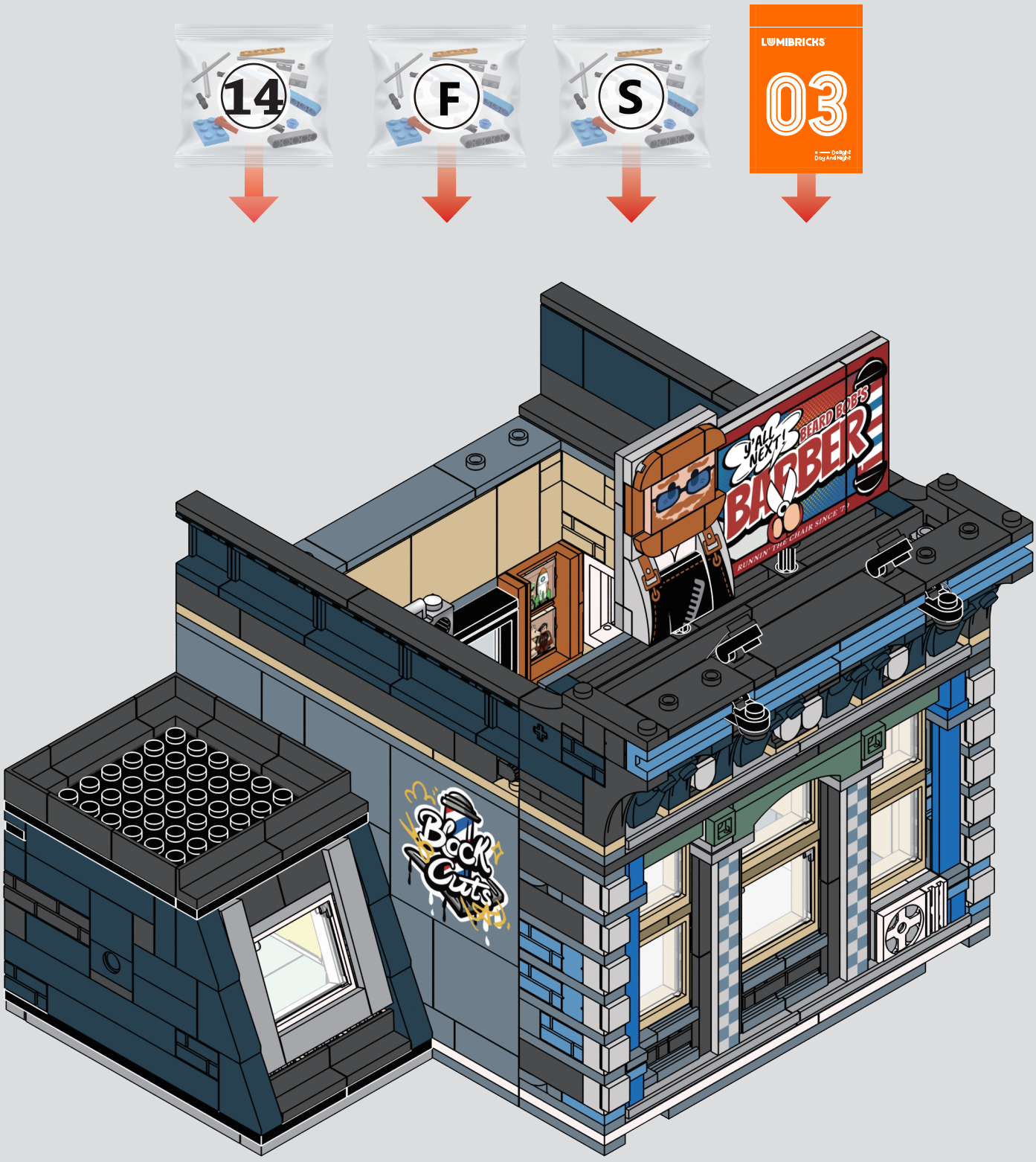
14
F
S
LUMIBRICKS
03
Y'ALL NEXT!
BEARD BOB'S
BARBER
RUNNIN' THE CHAIR SINCE
Black Cuts

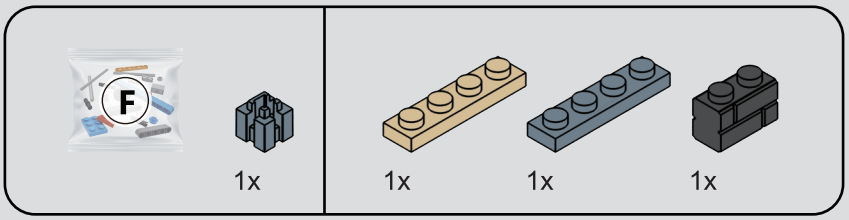

187

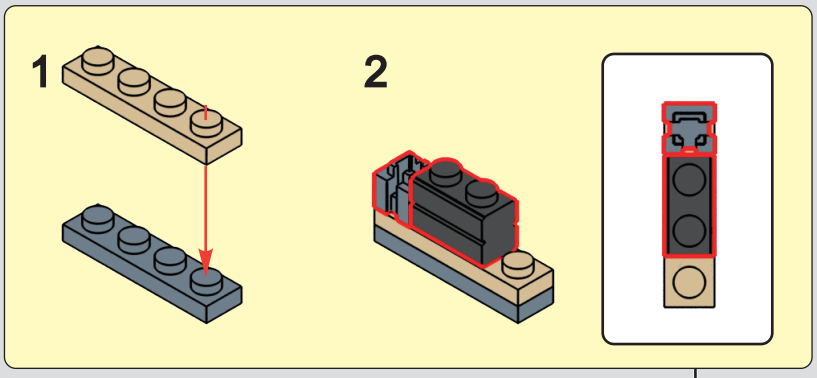

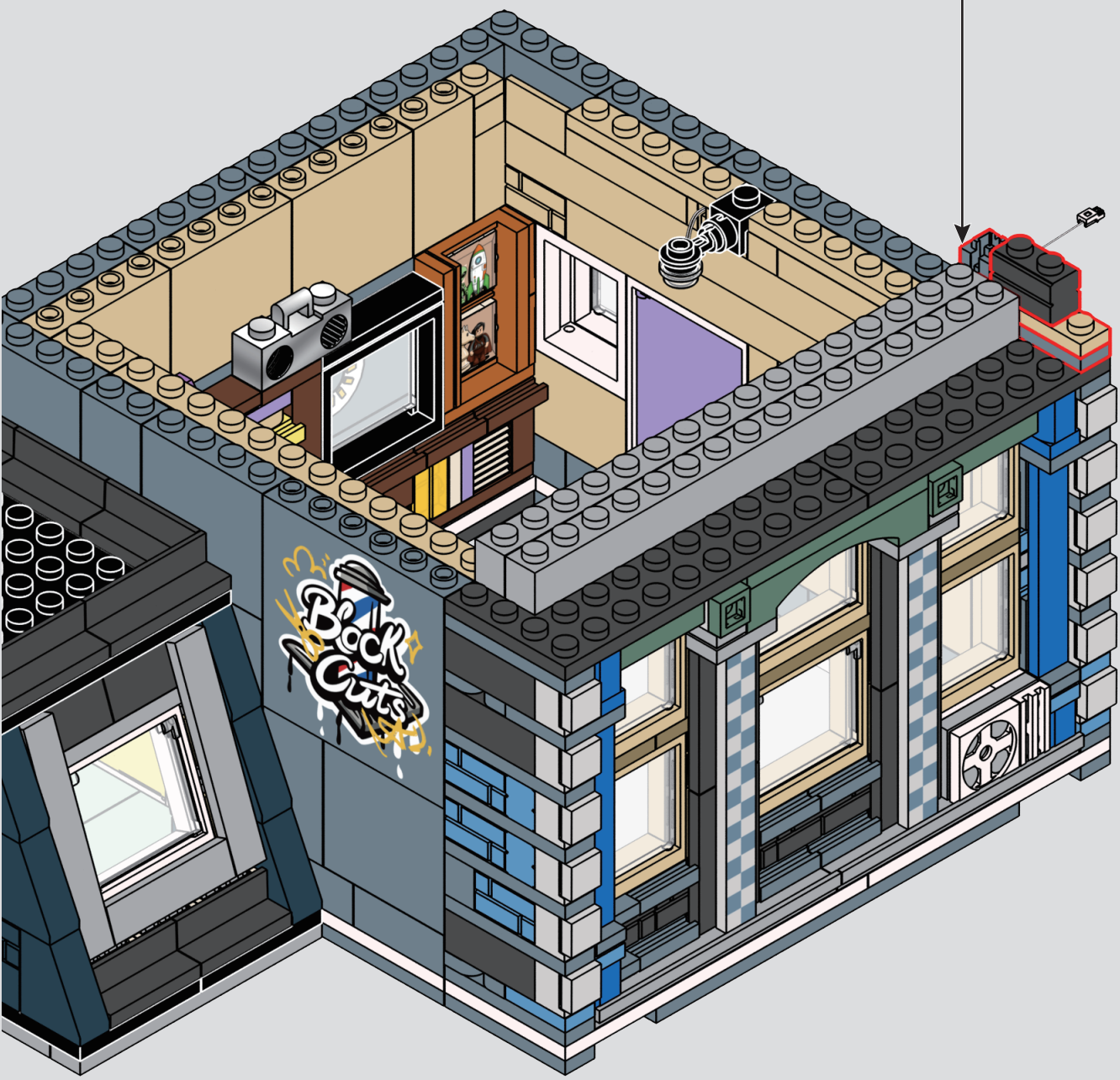

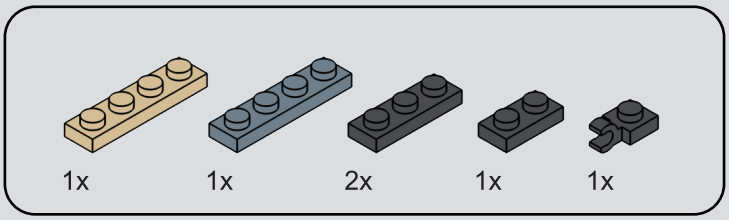

188

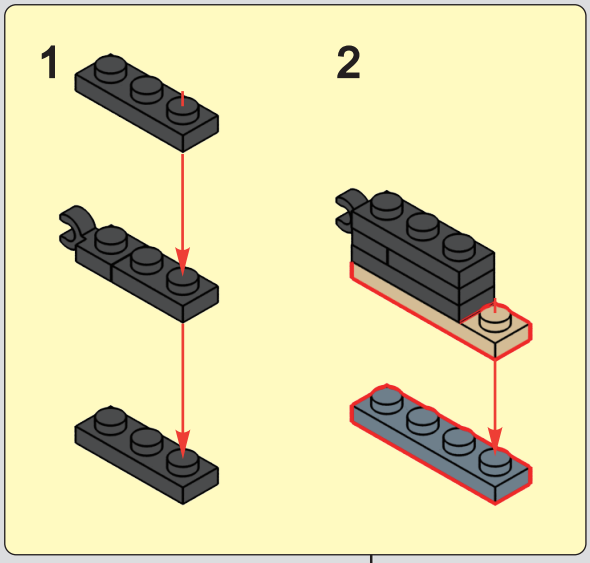

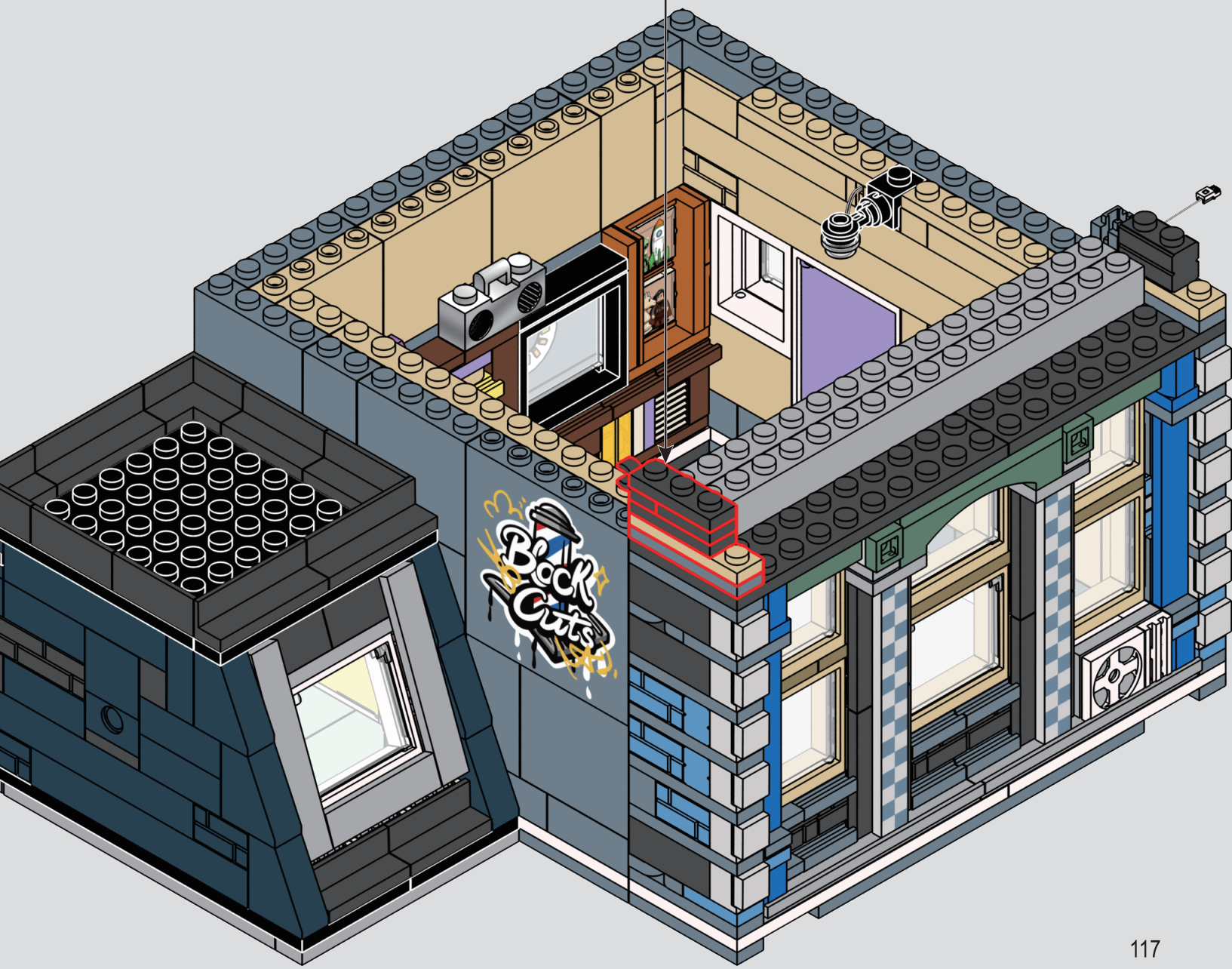

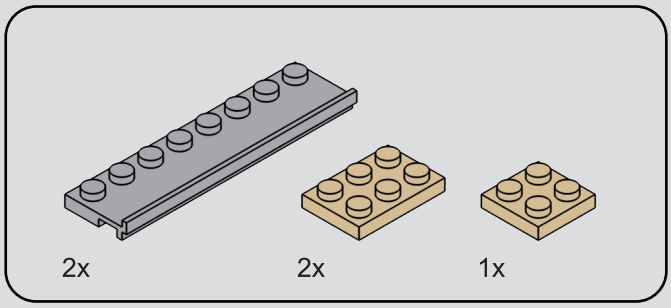

189

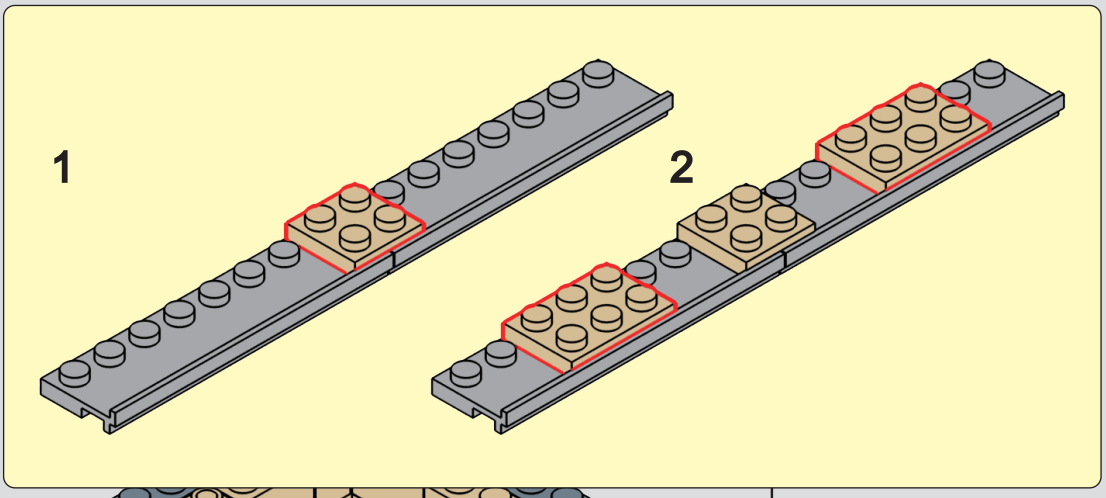

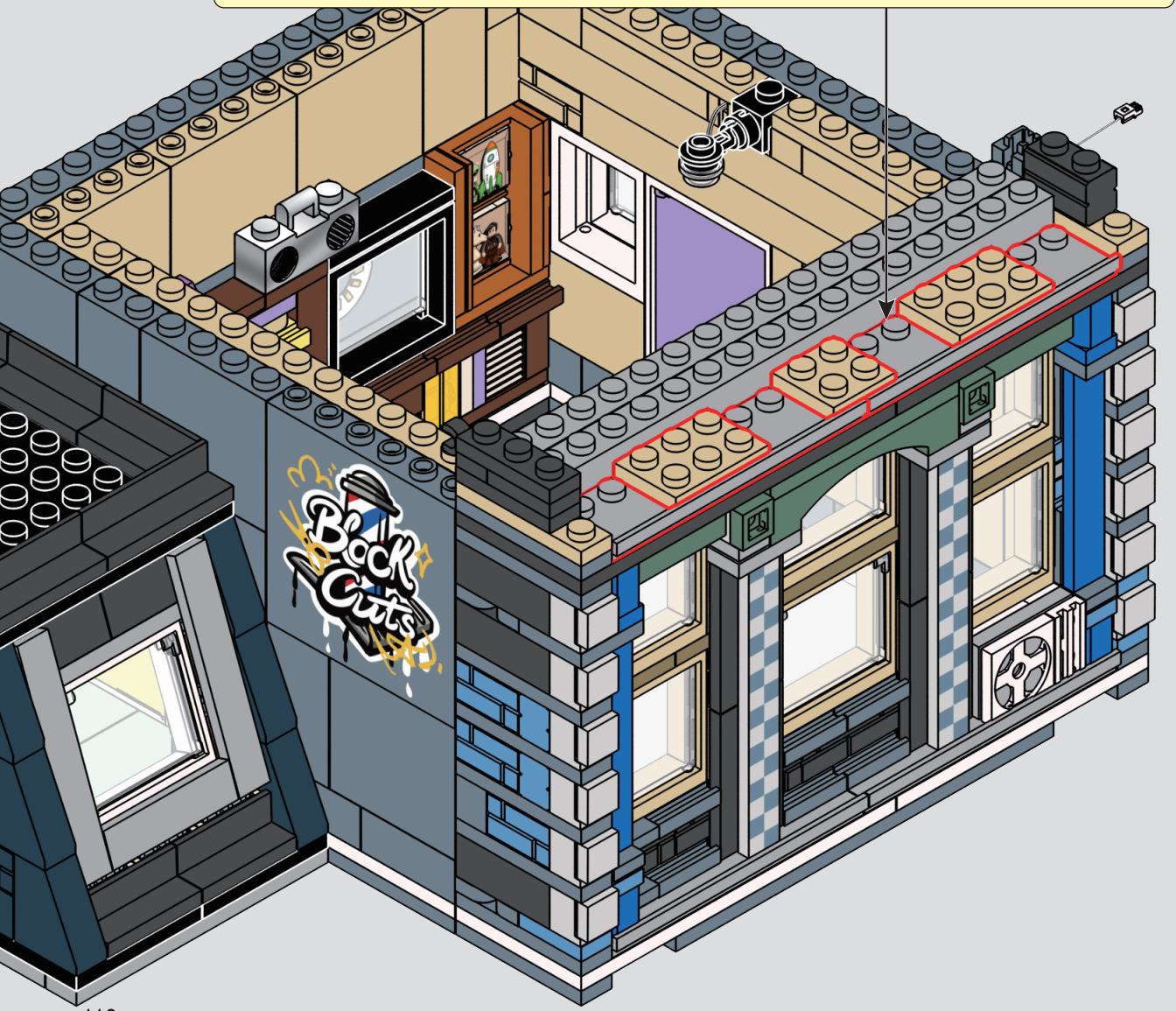

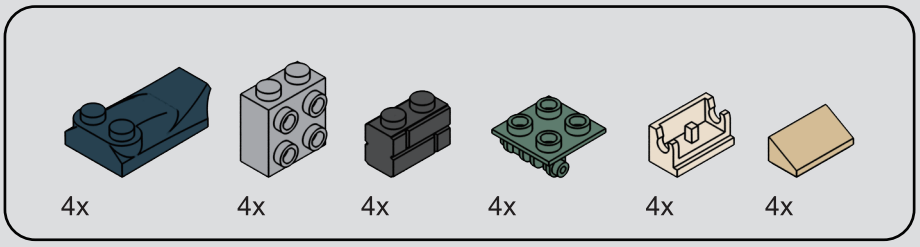

190

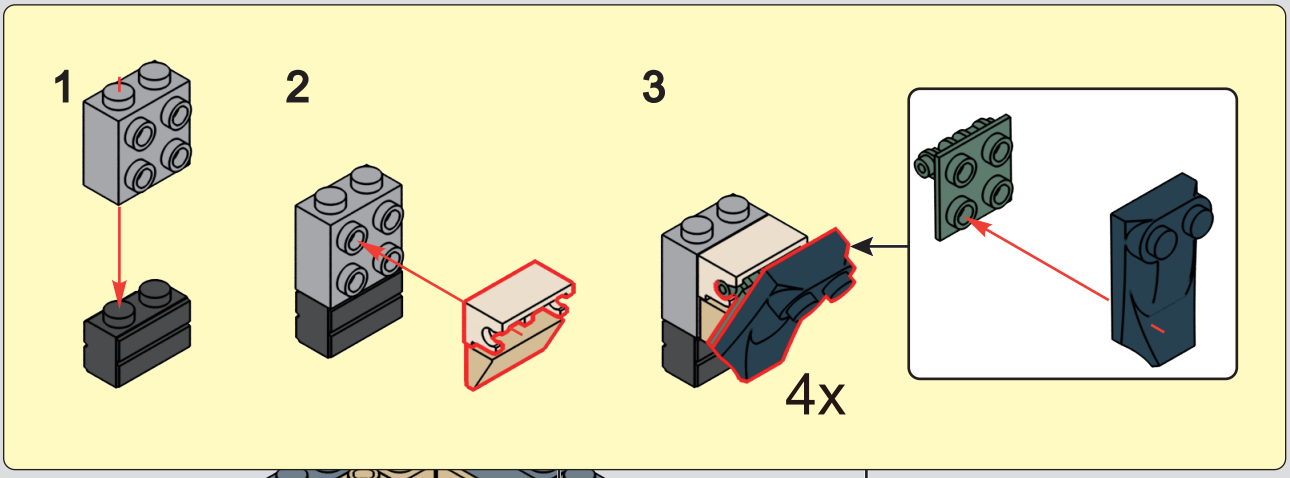

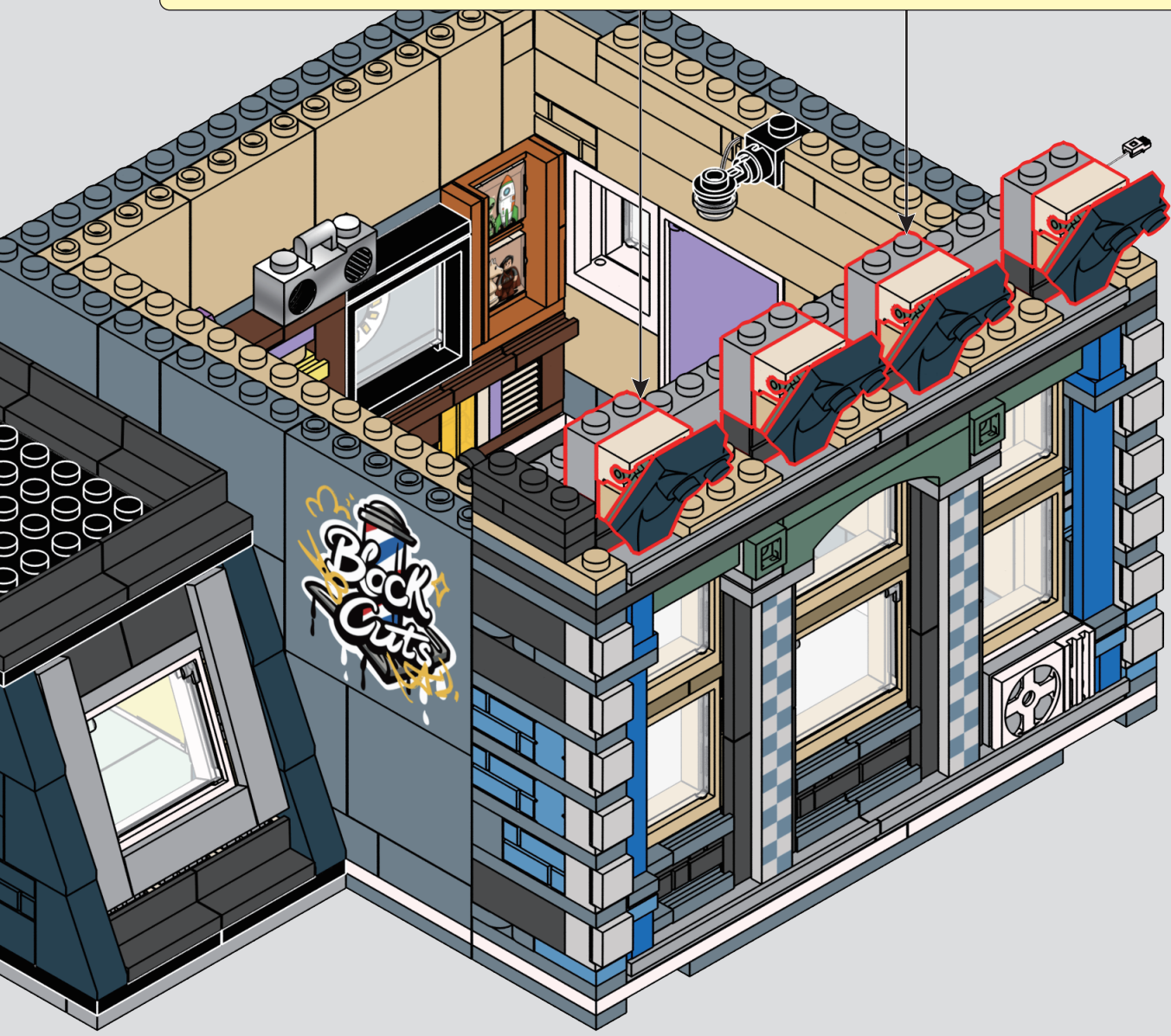

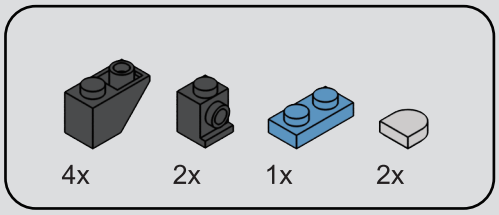

191

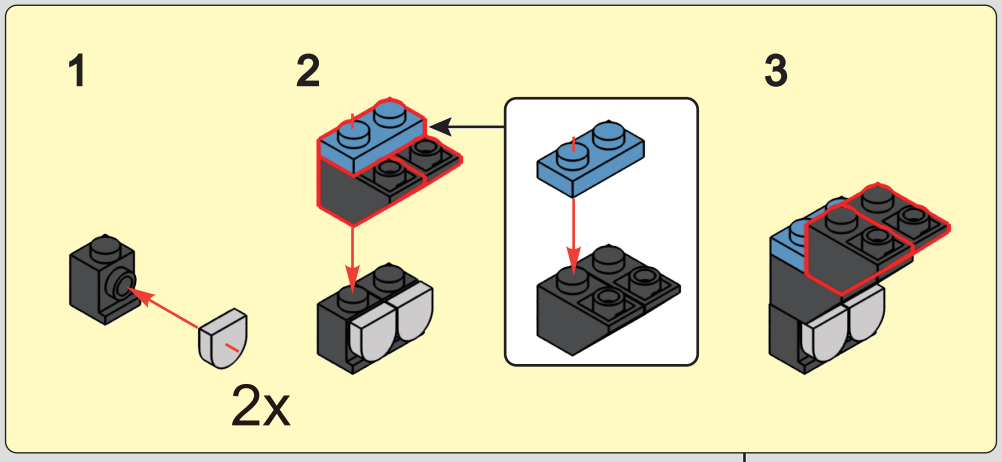

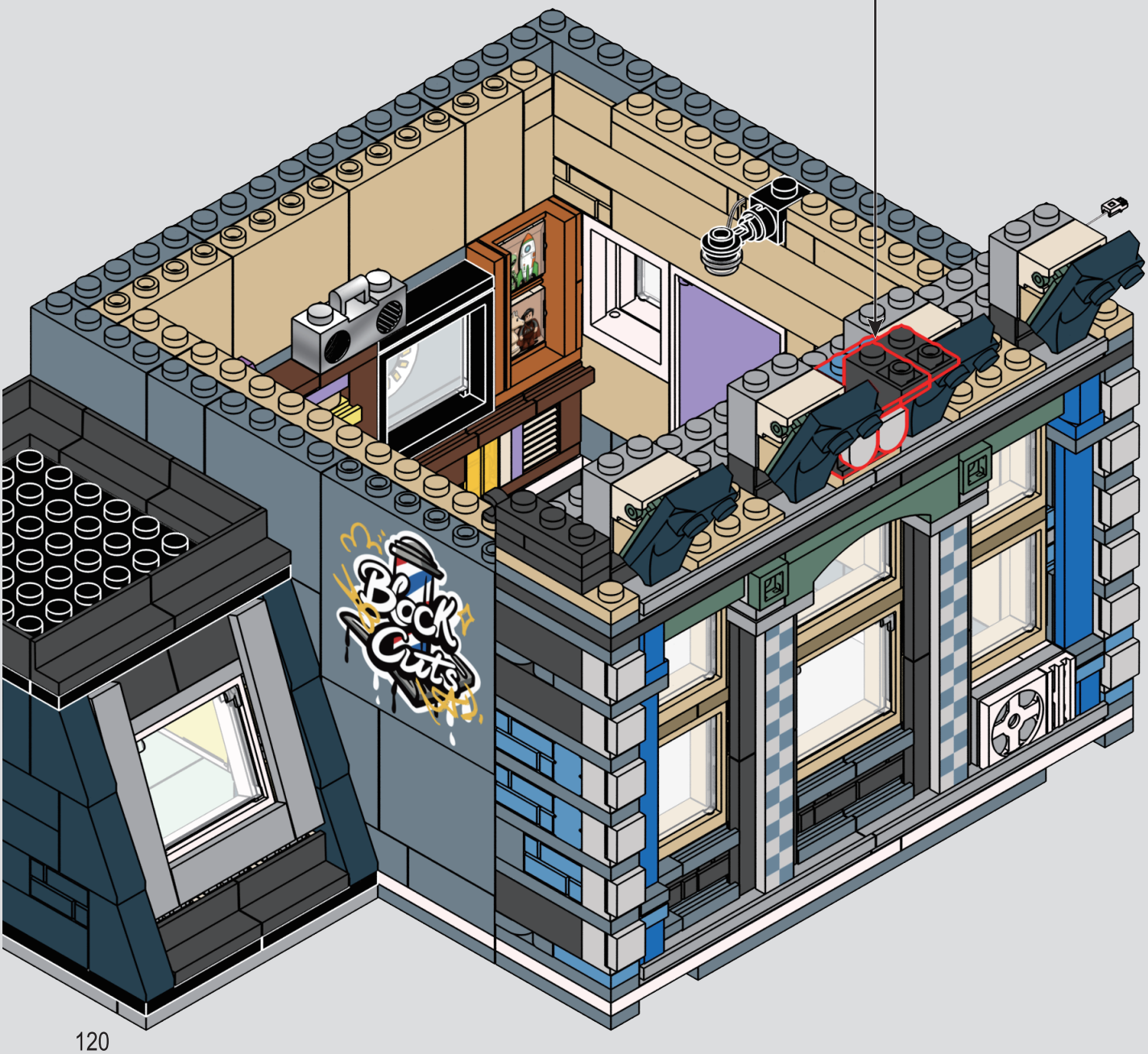

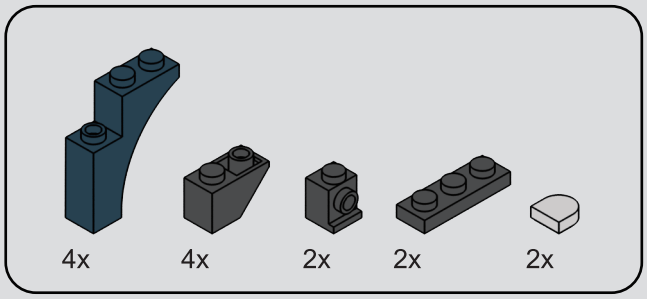

192

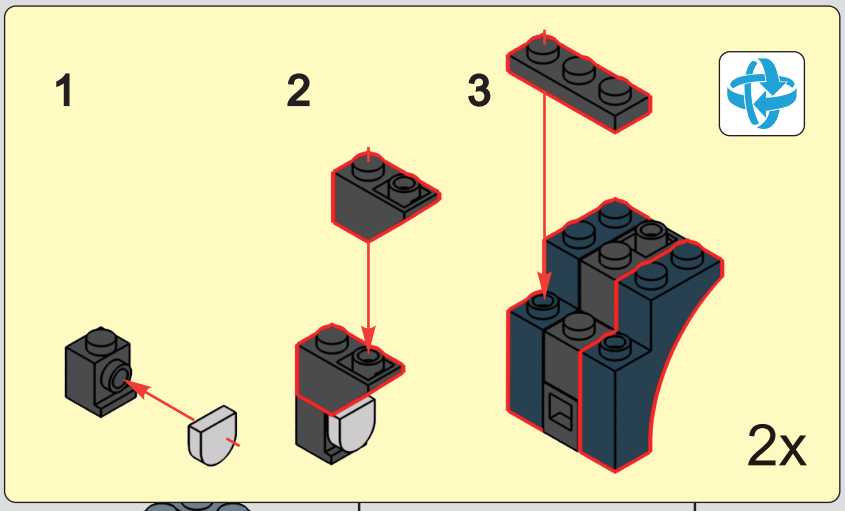

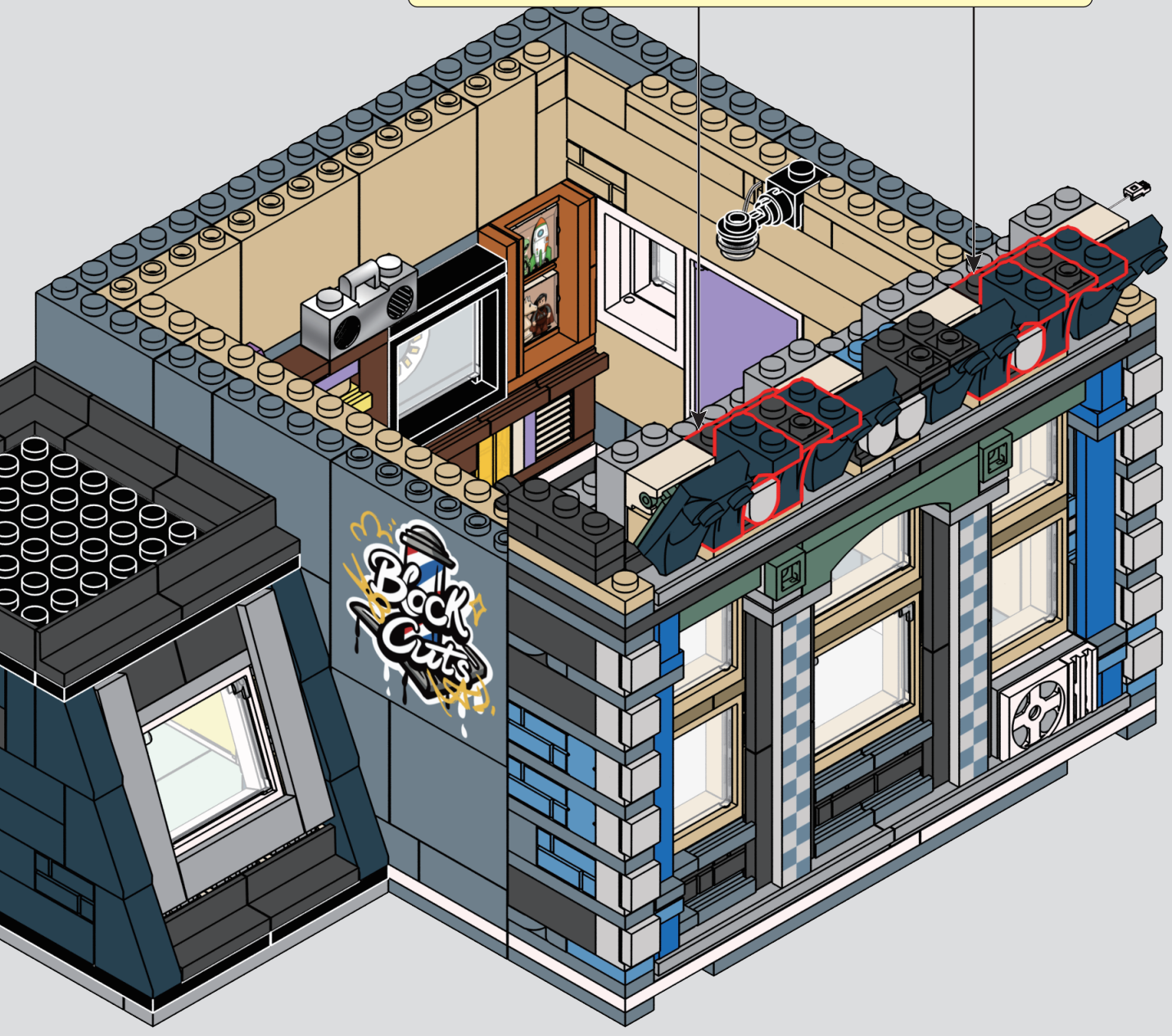

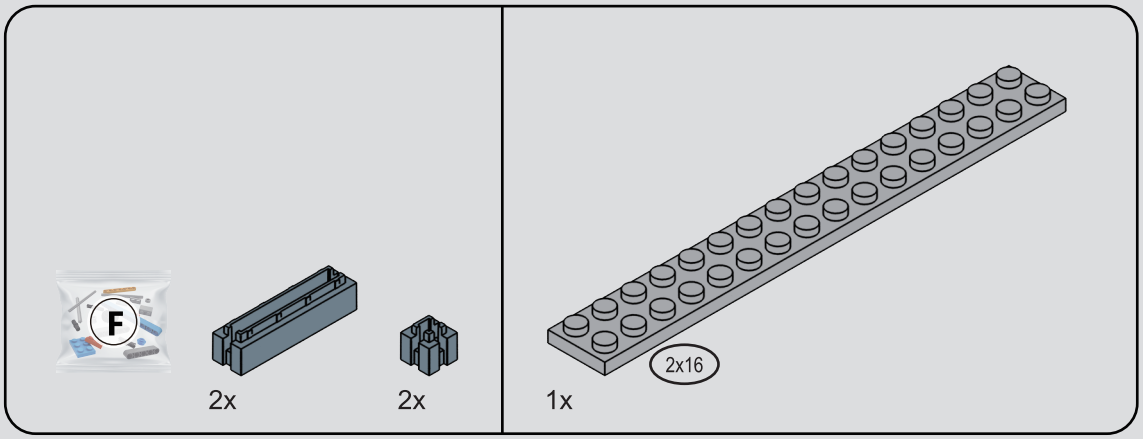

193

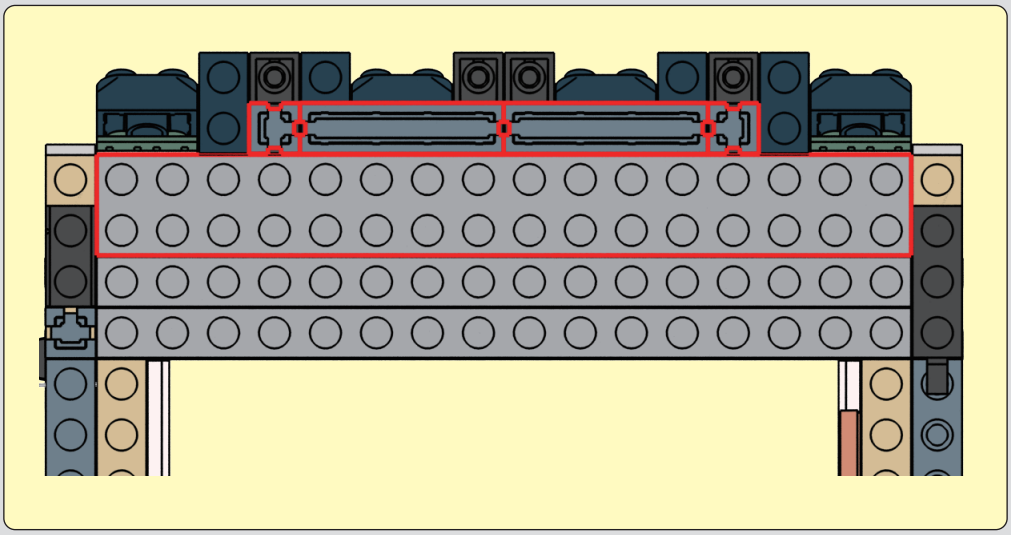

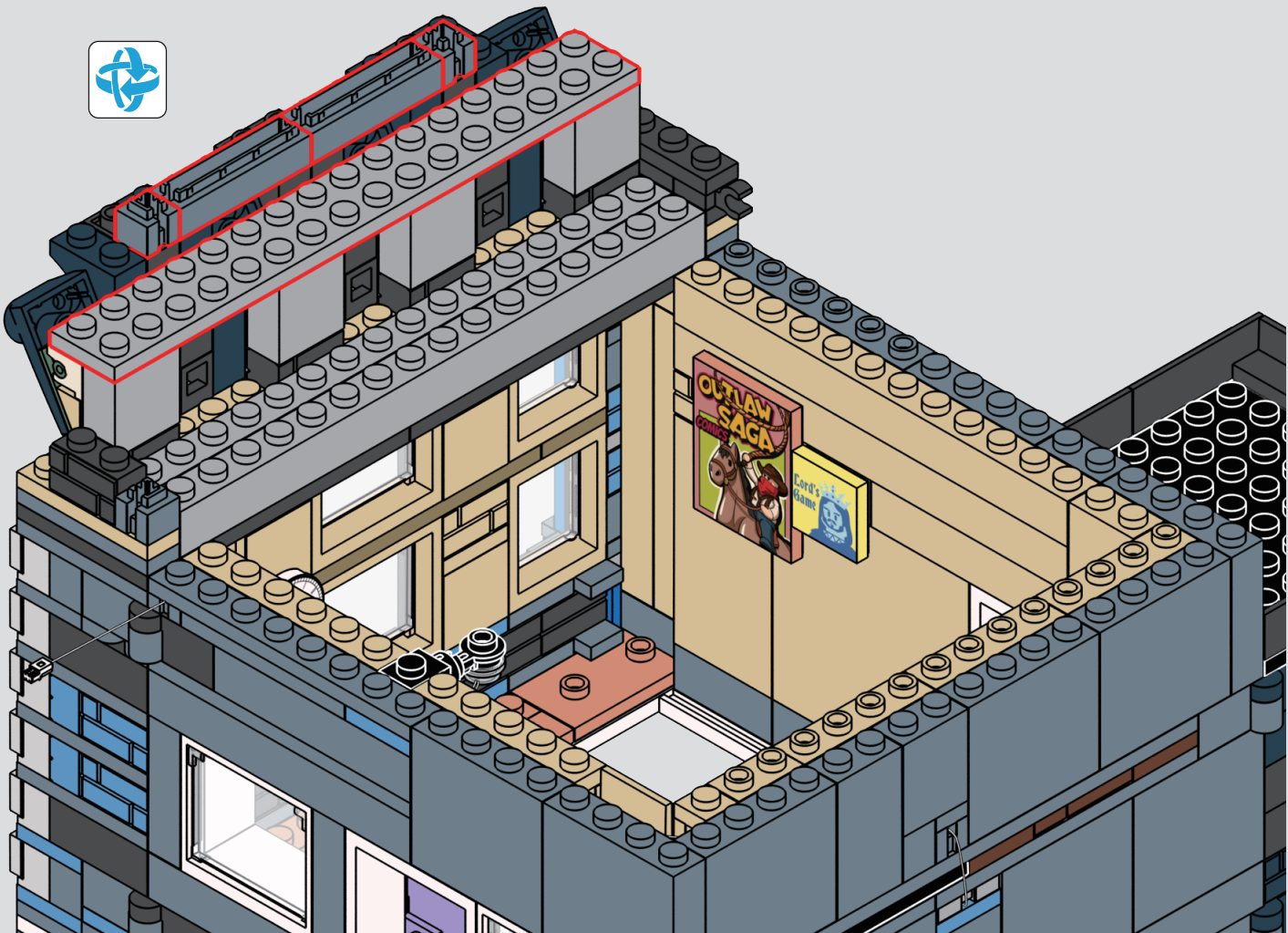

1x

194

1

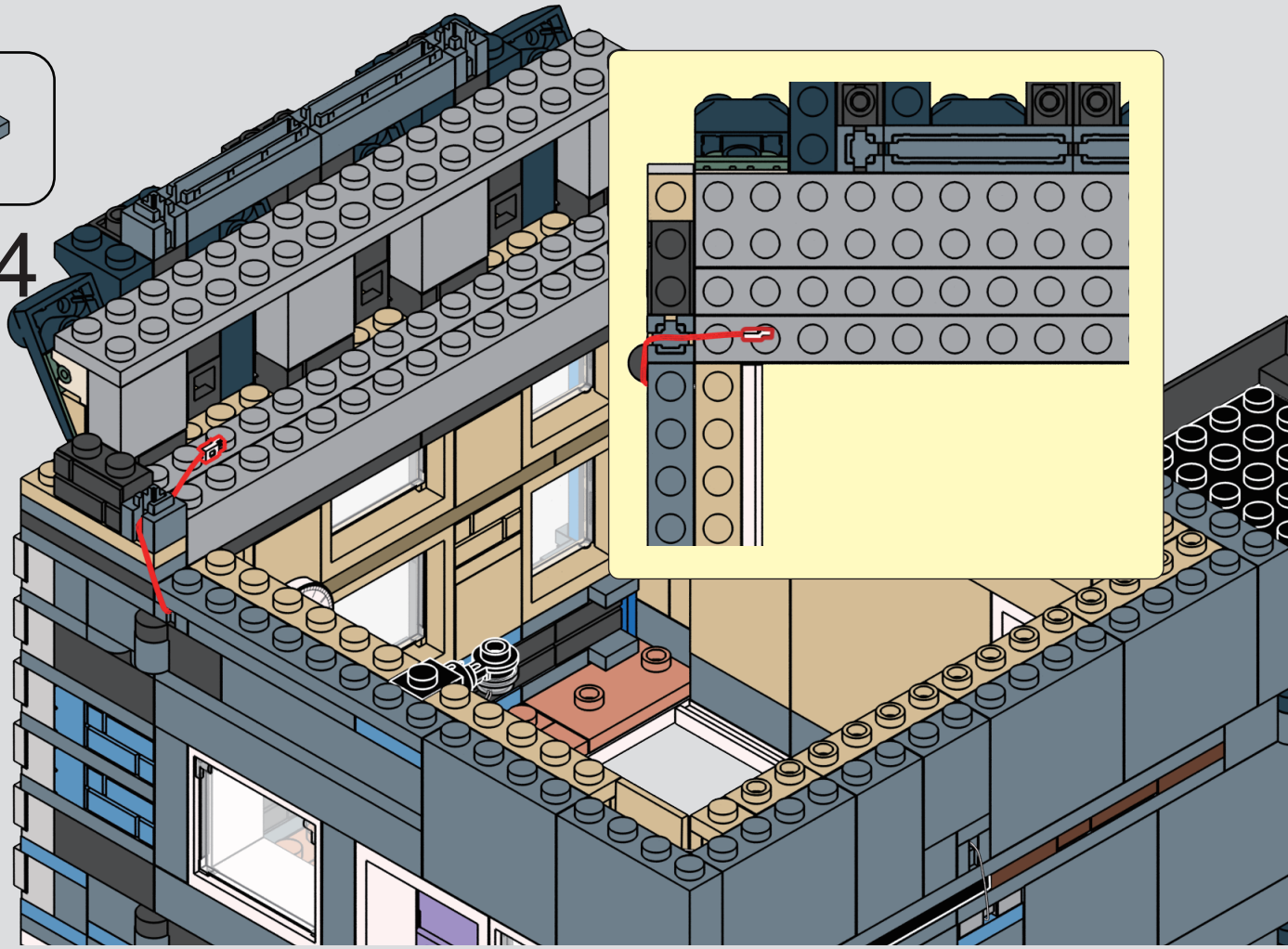

2

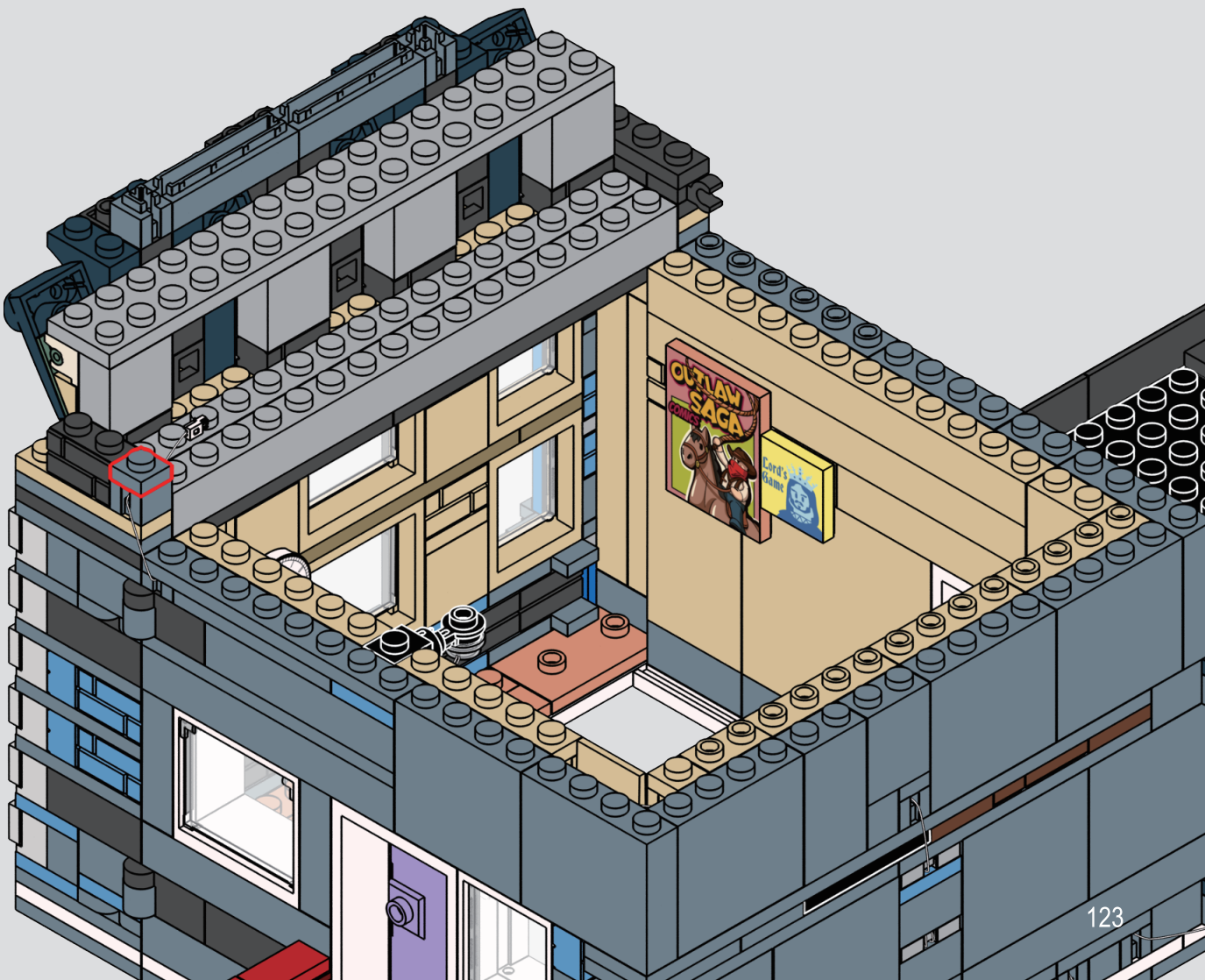

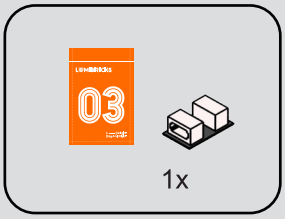

195

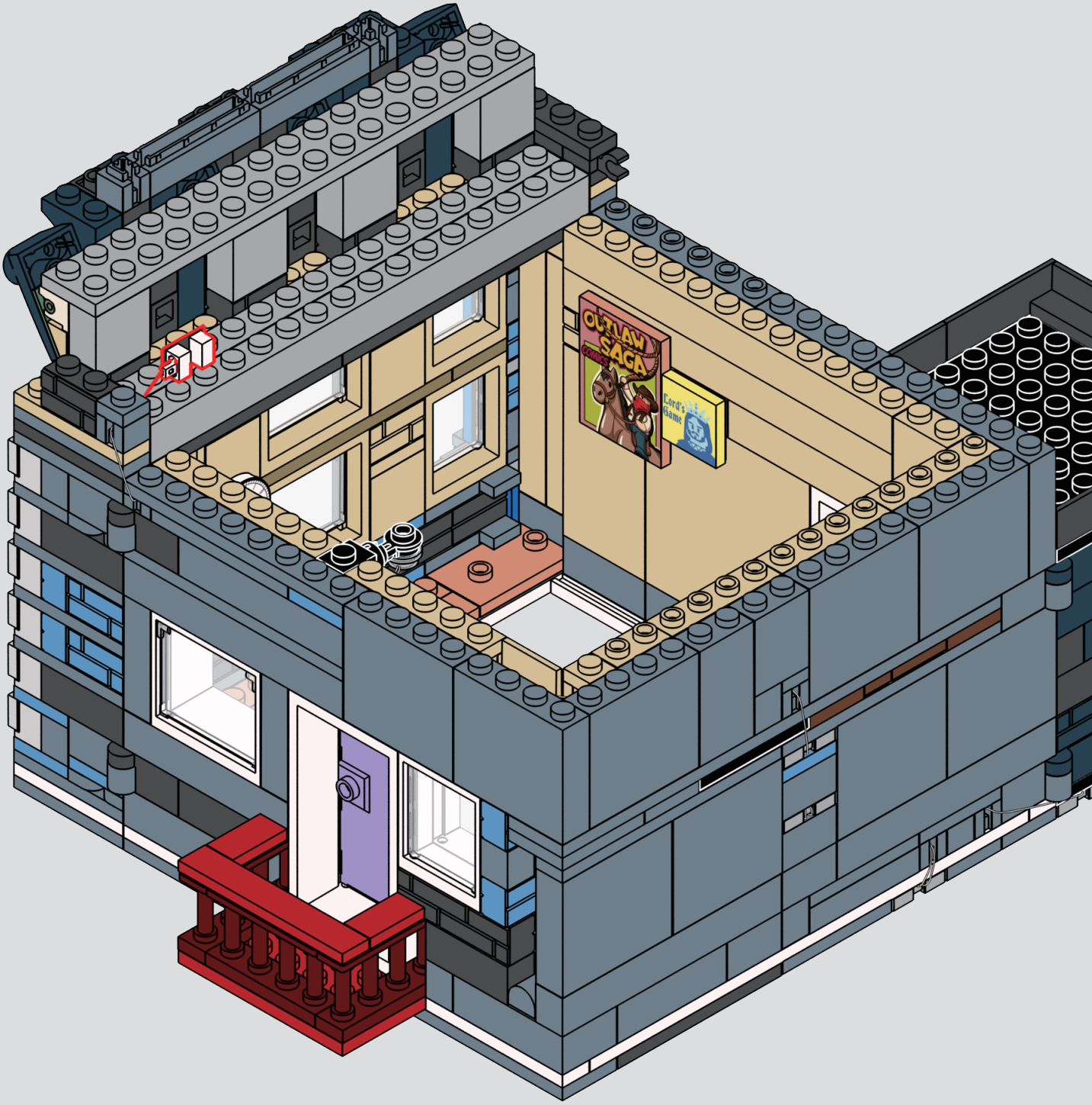

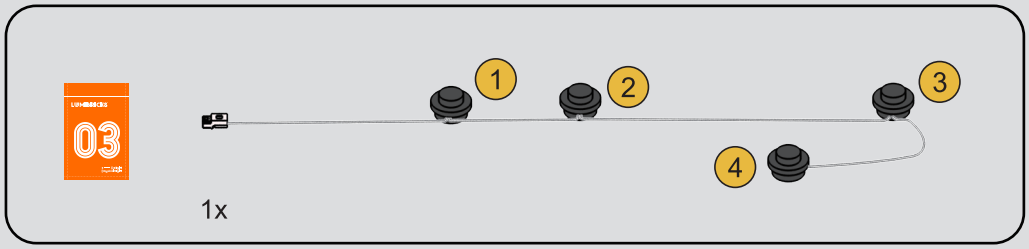

196

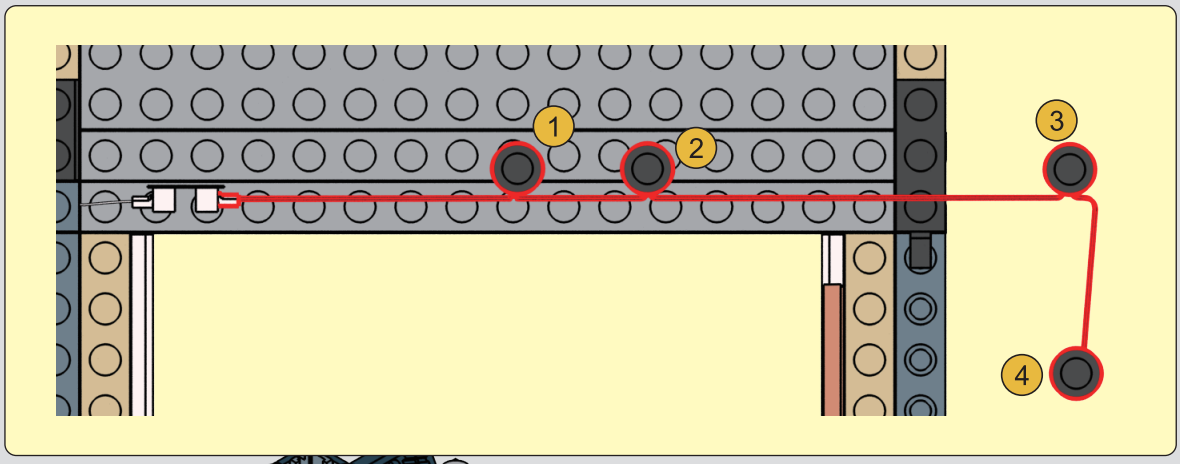

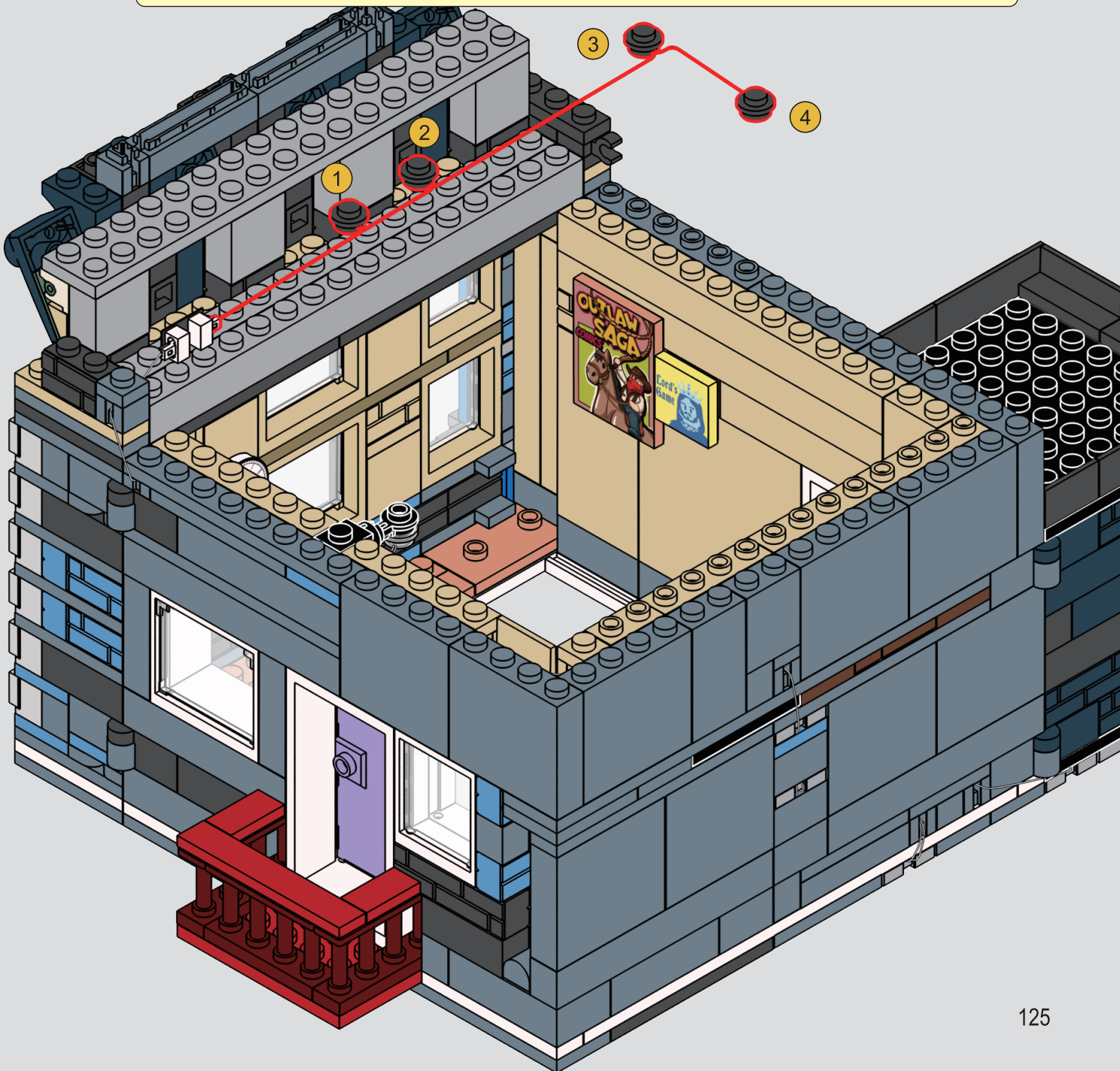

197

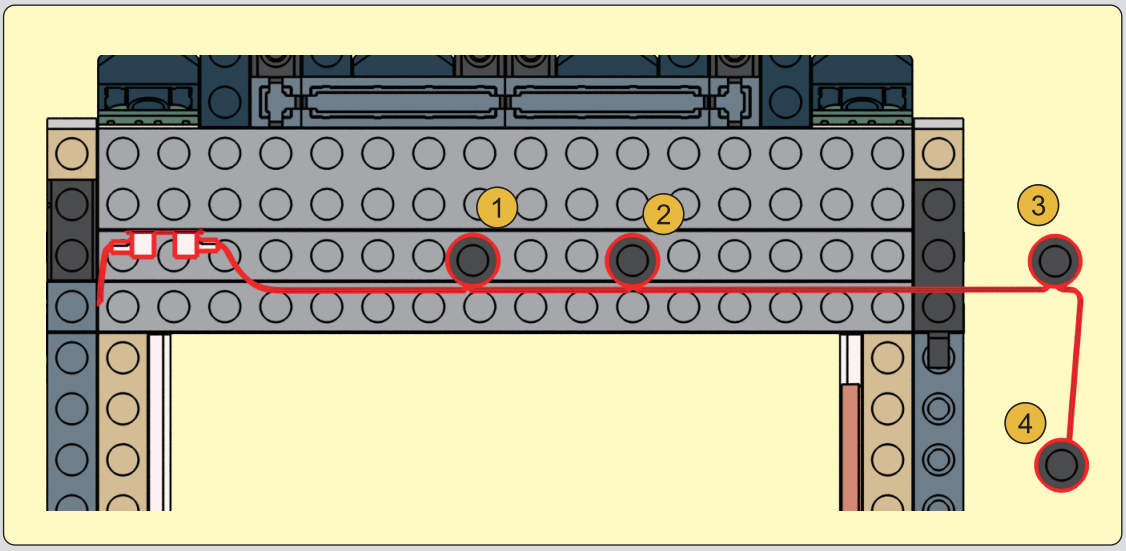

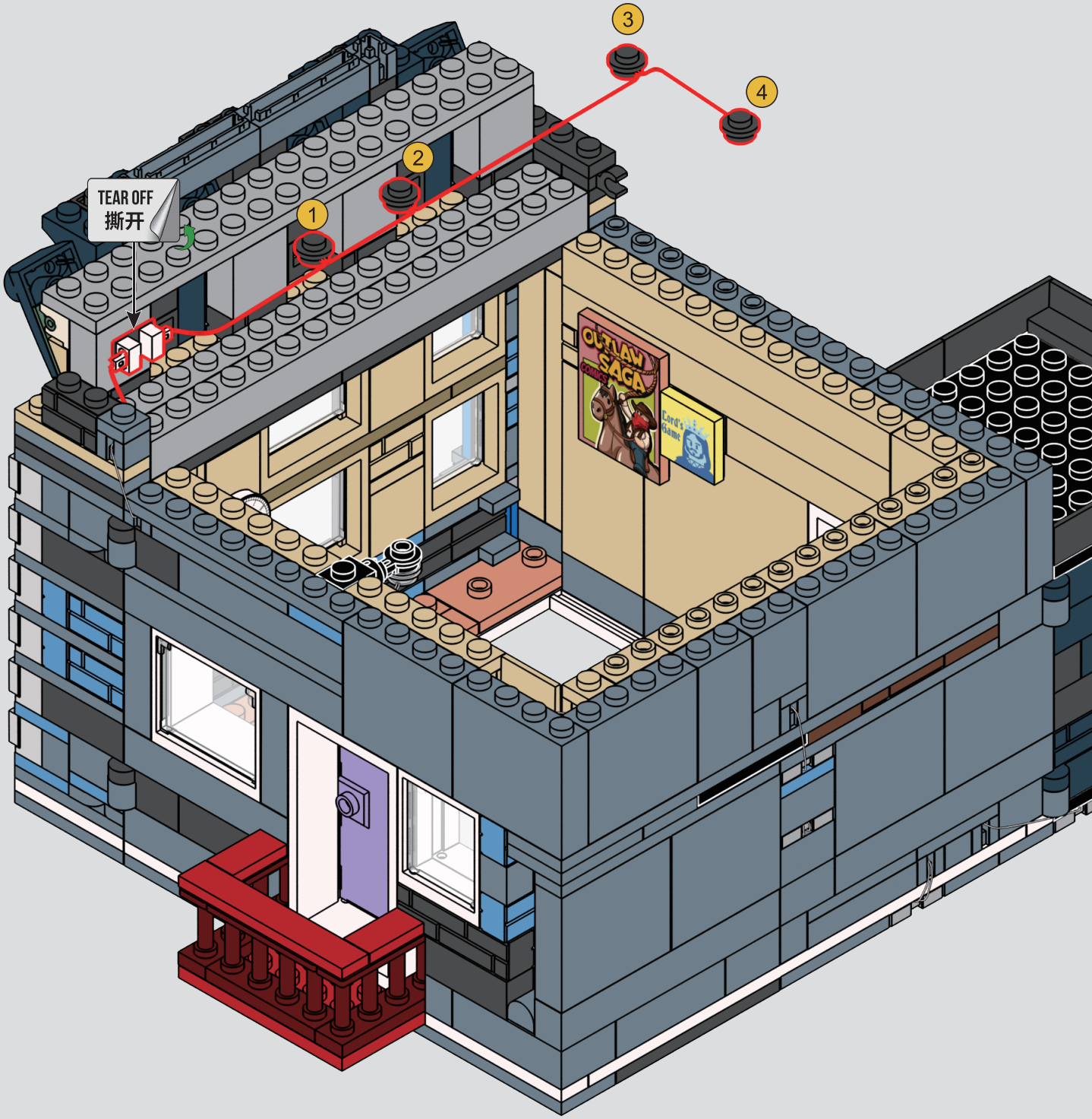

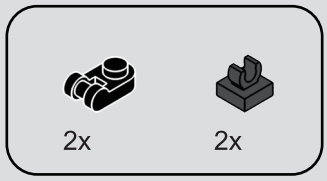

198

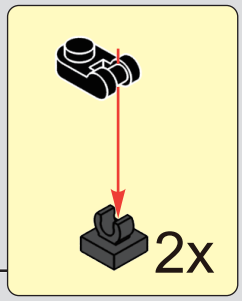



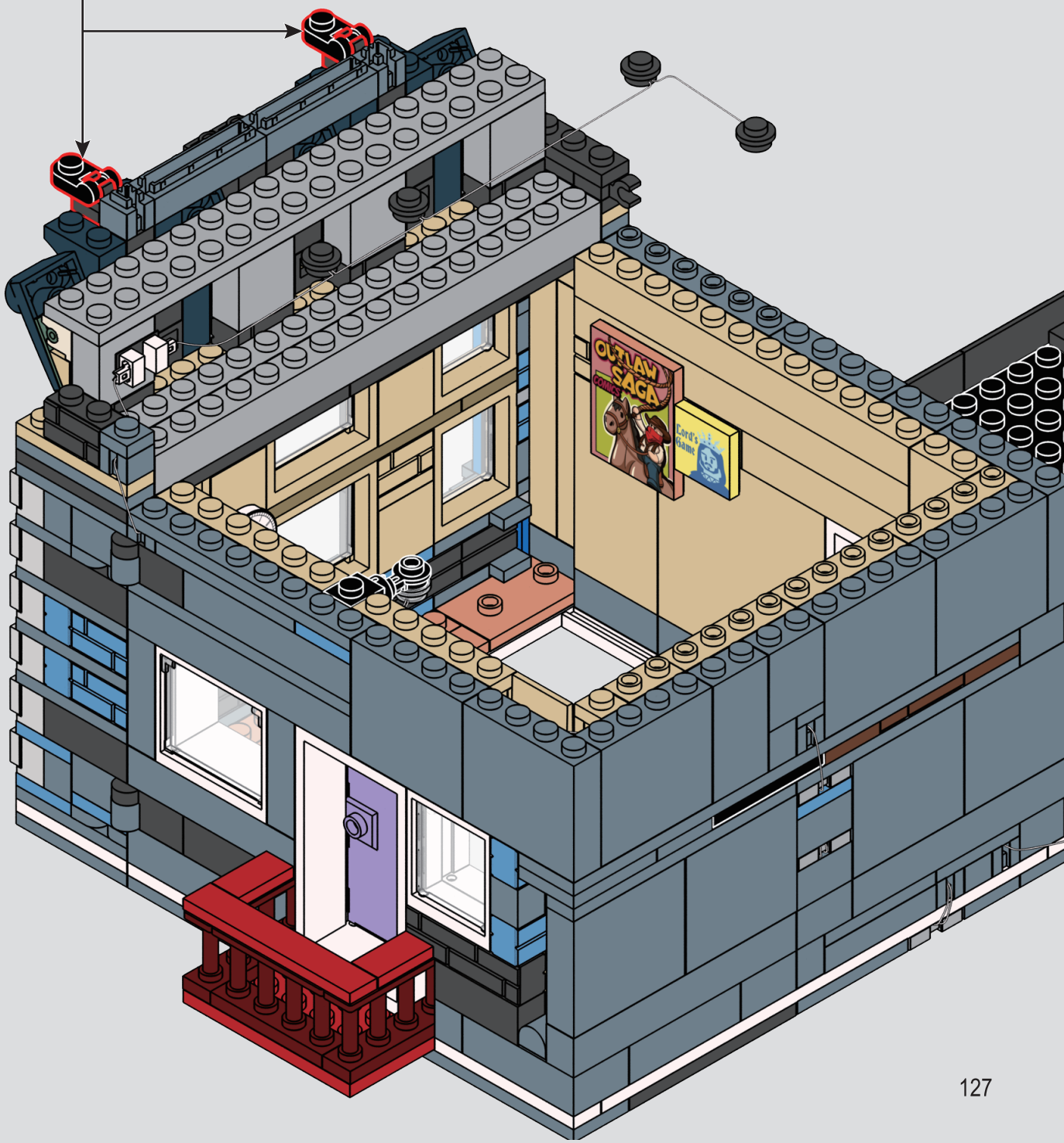

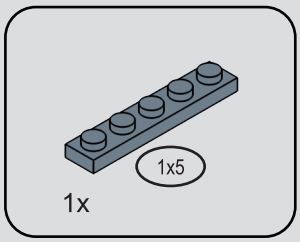

199

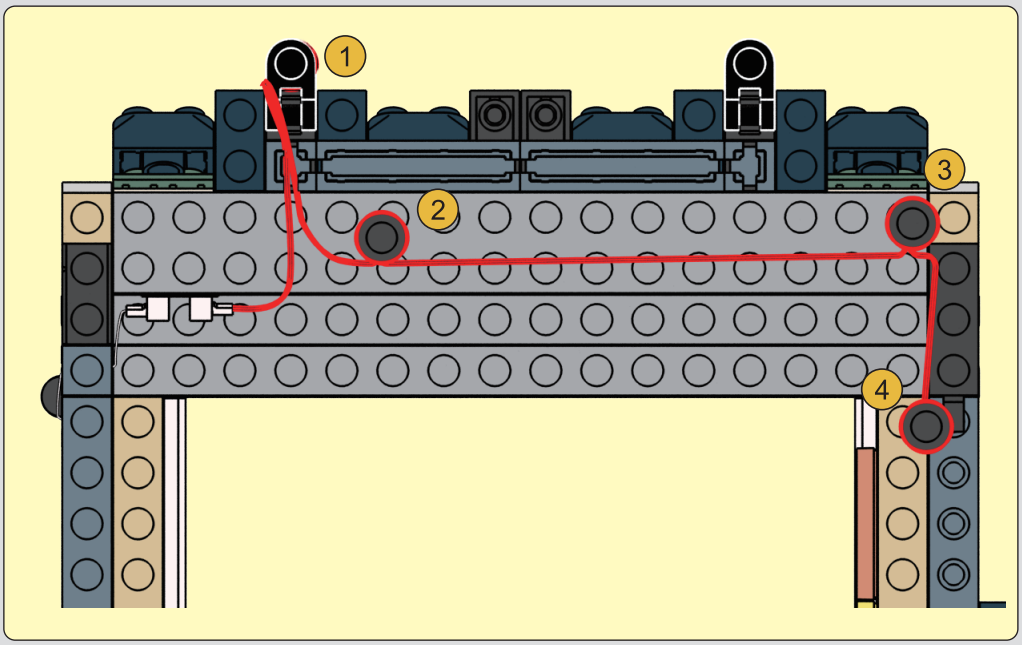

1

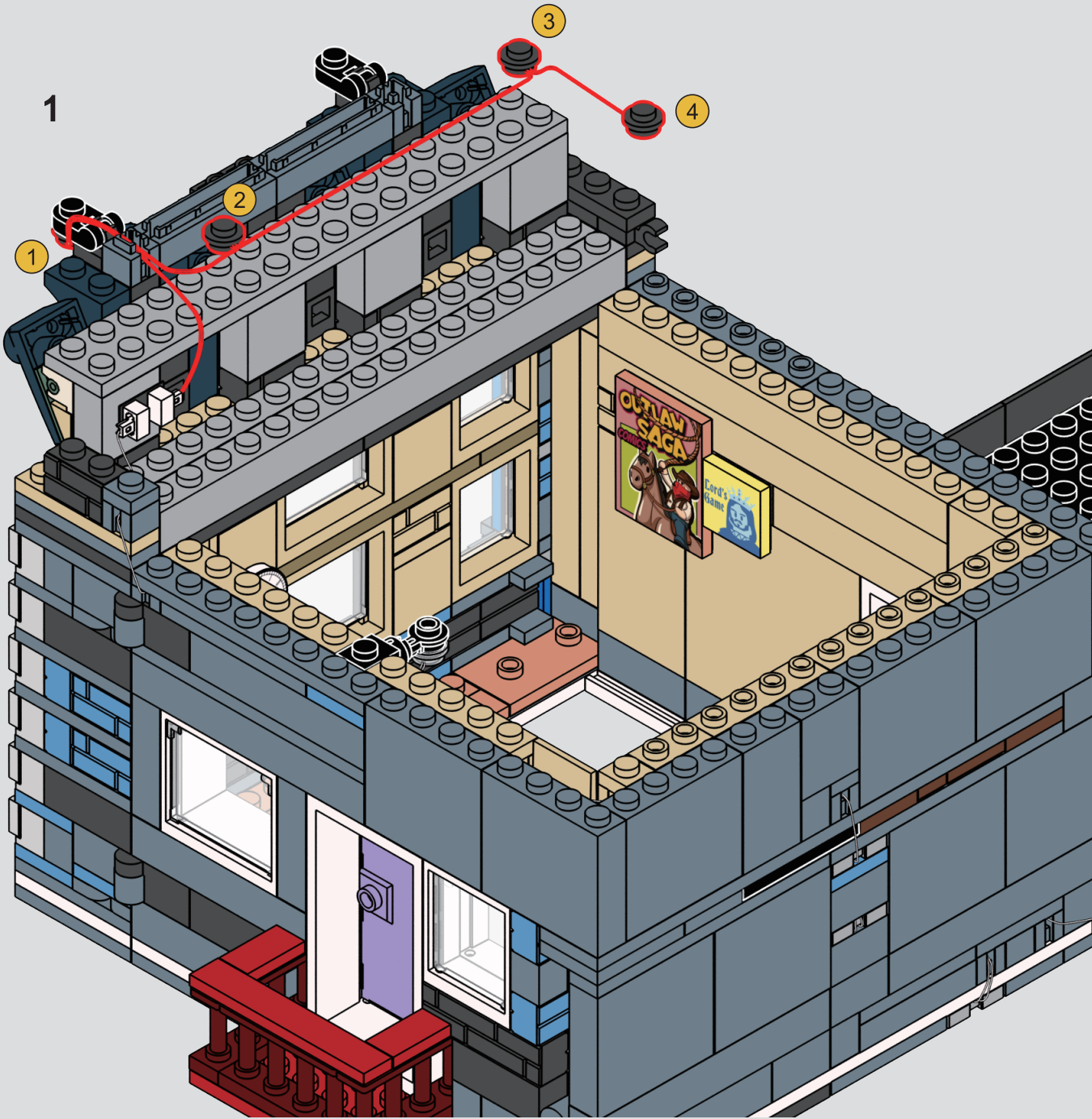

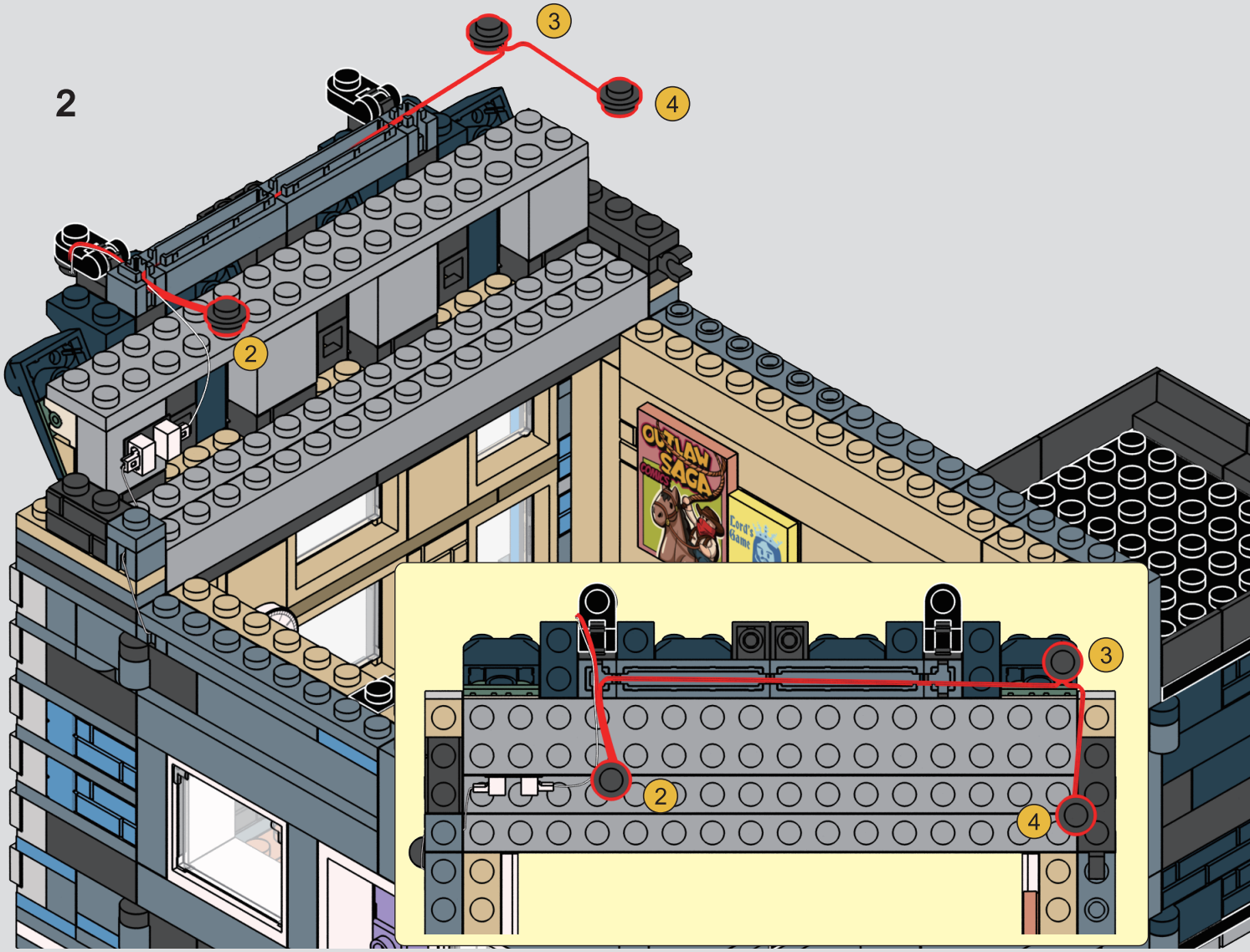
2
3
4
2
OUTLAW SAGA
COMICS
Card's Game
3
2
4

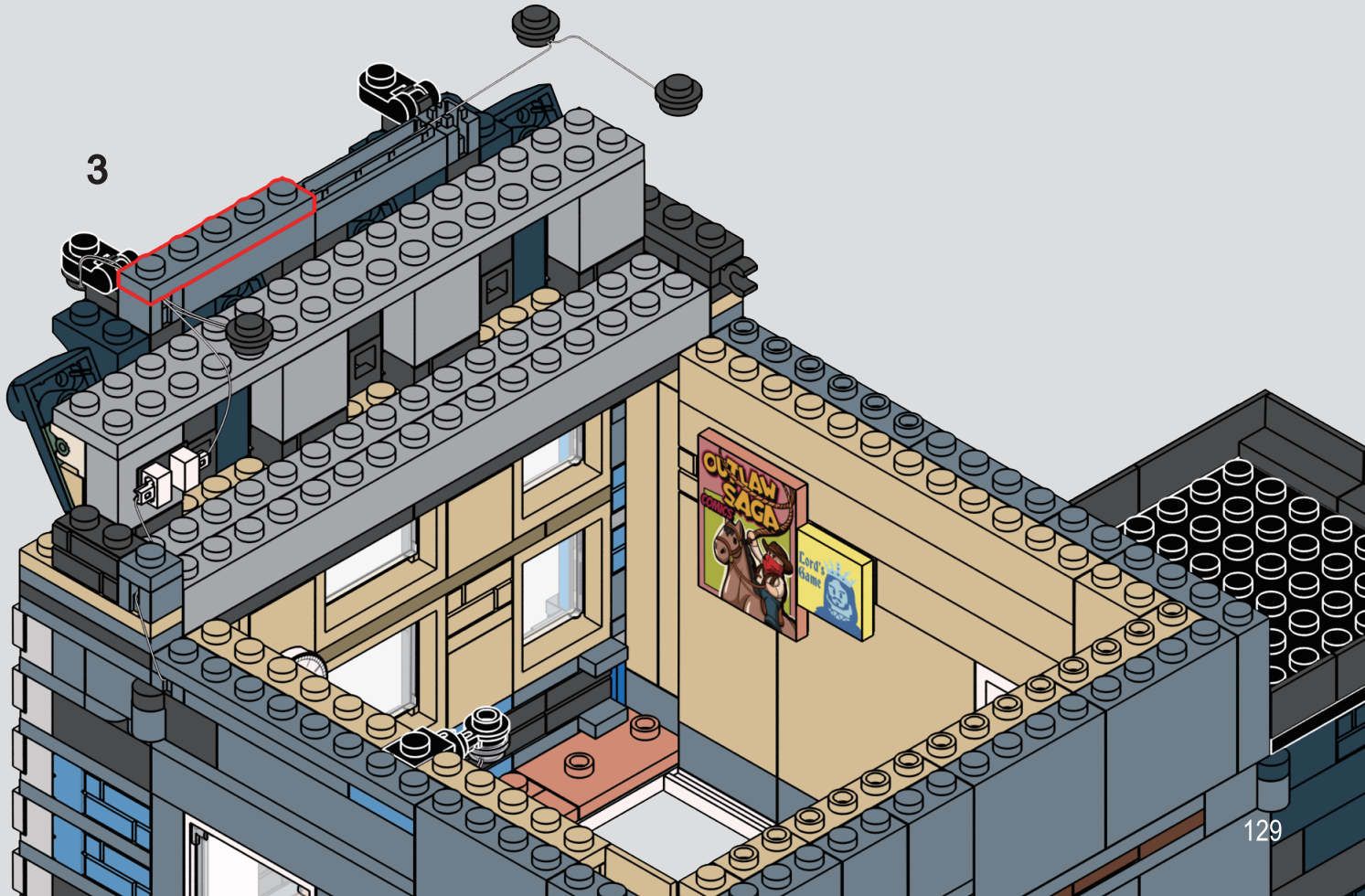
3
OUTLAW SAGA
COMICS
Card's Game

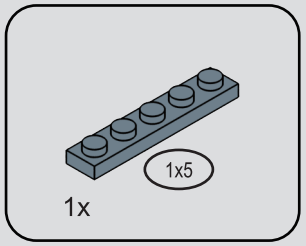

200

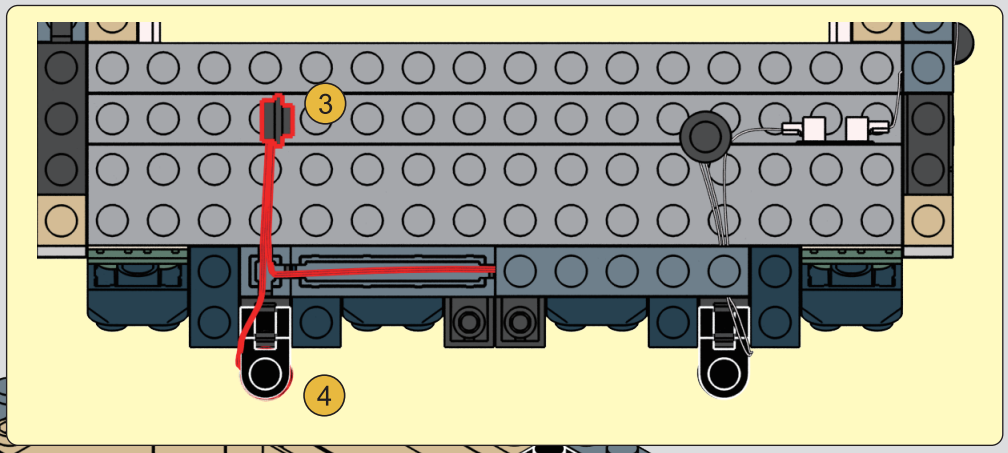

1



2



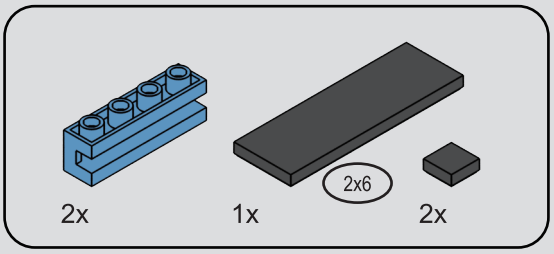

201

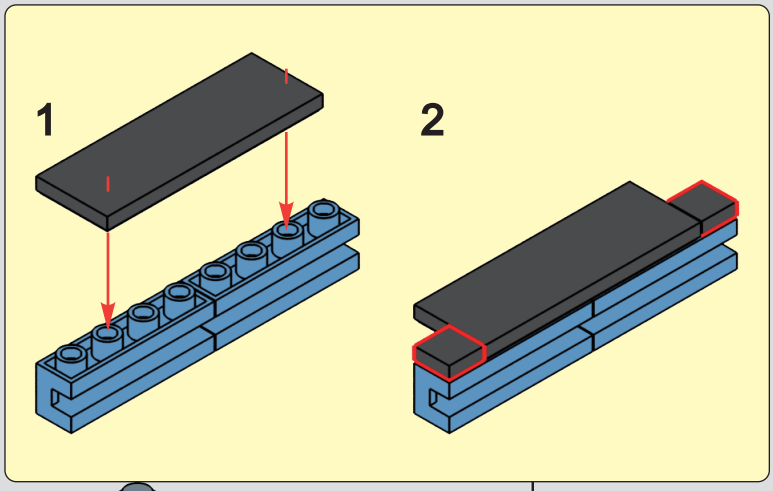

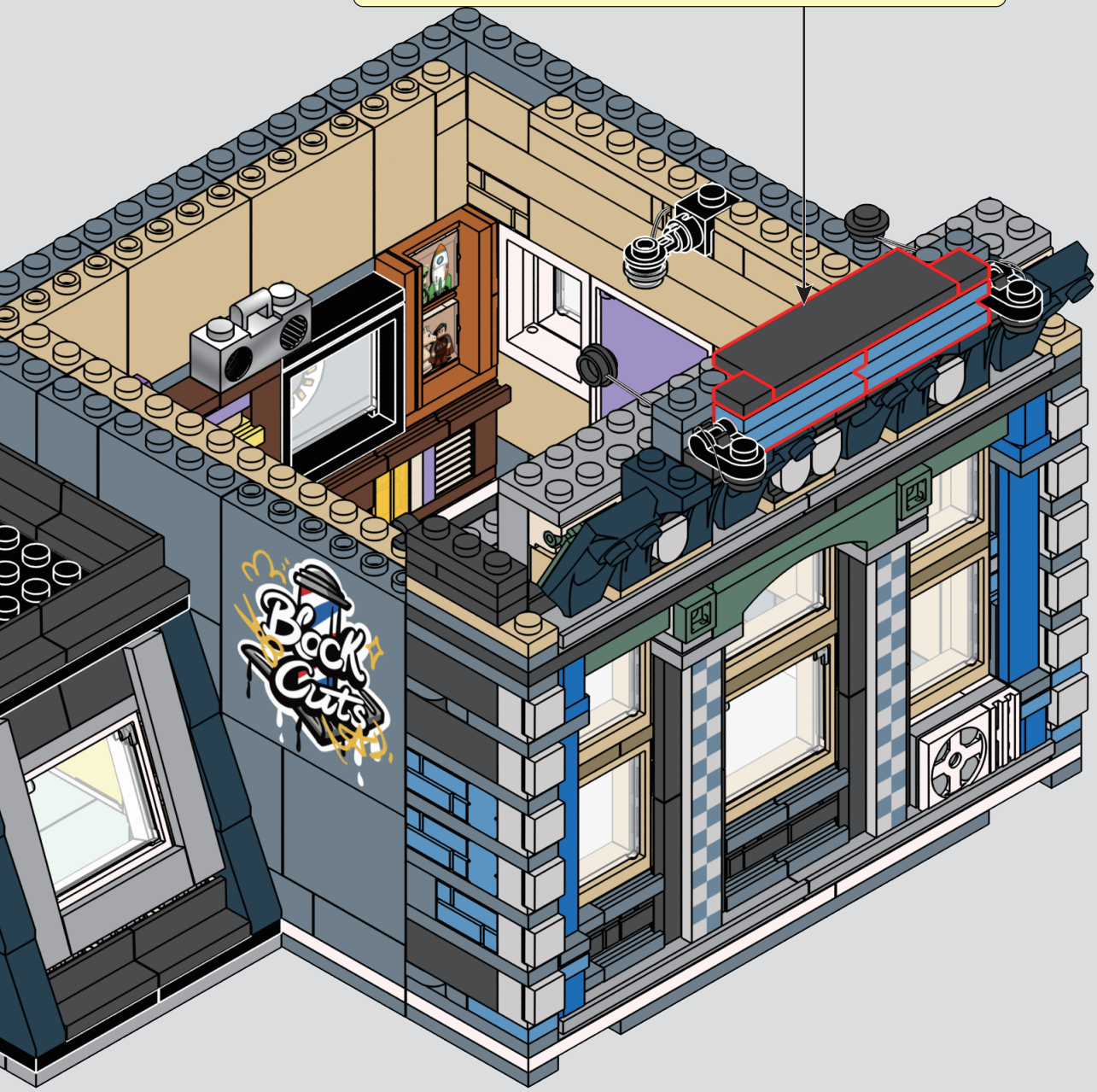

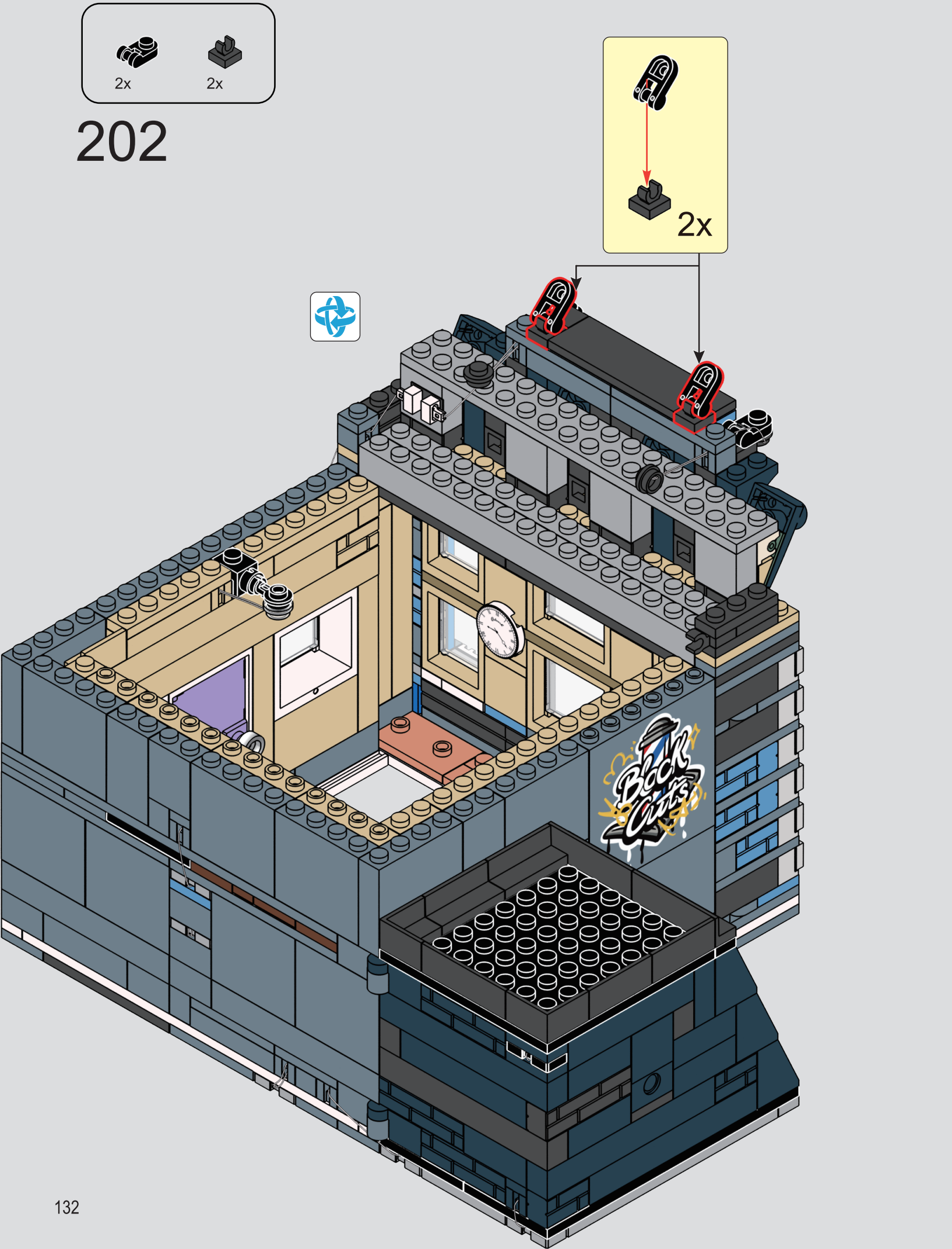
2x
2x
202
2x
Block Cuts

203

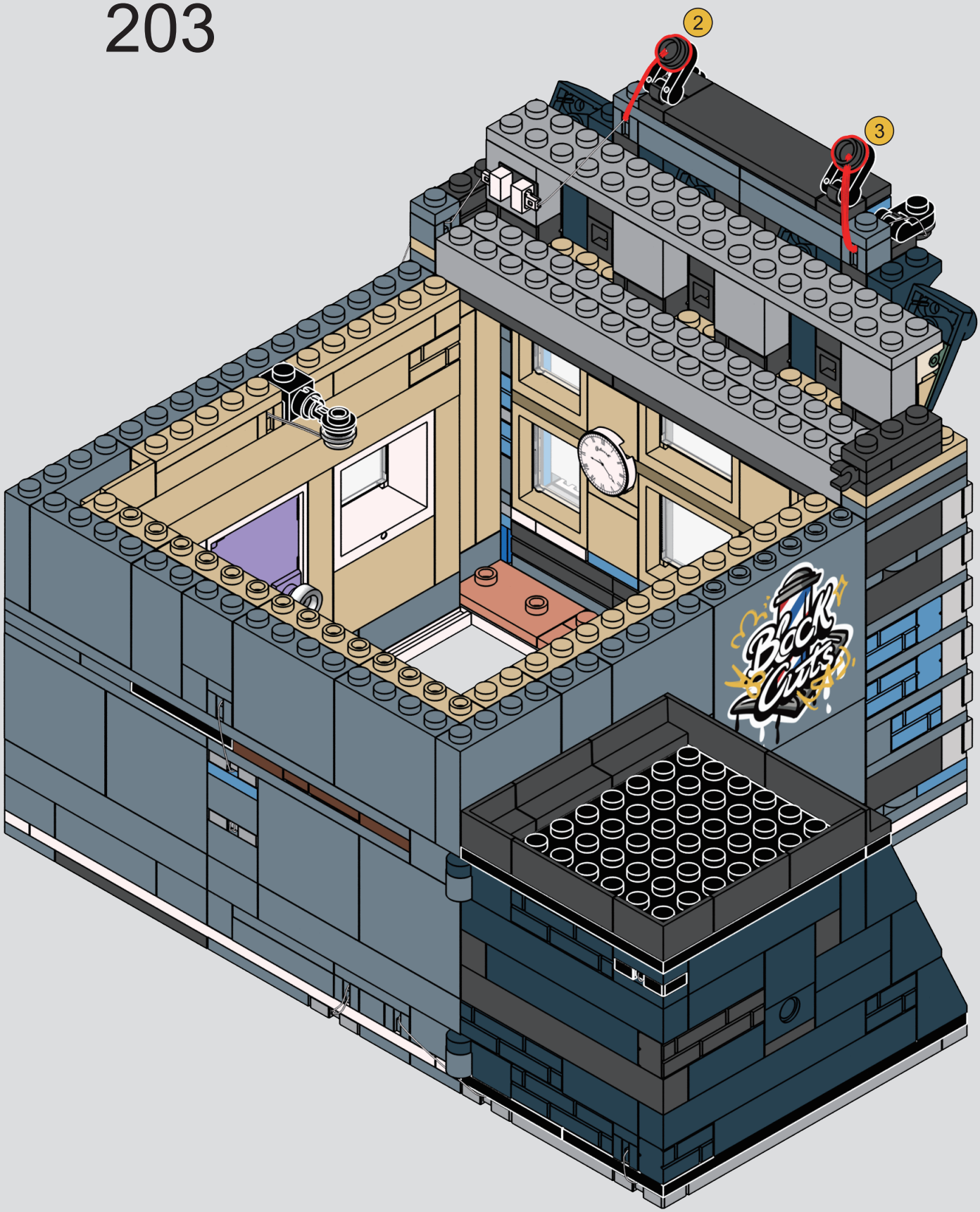

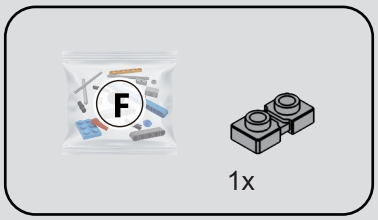

204

1

2

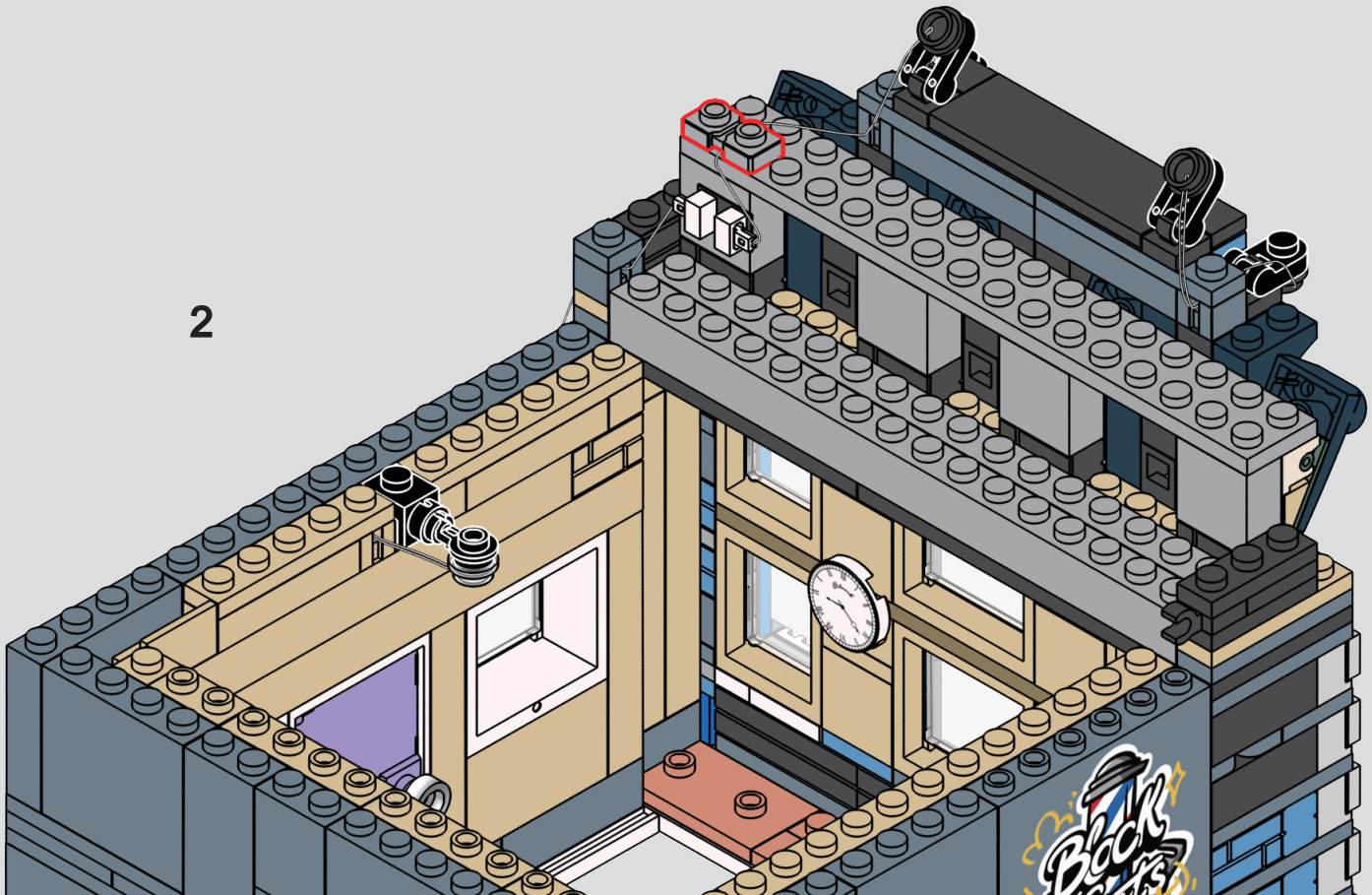

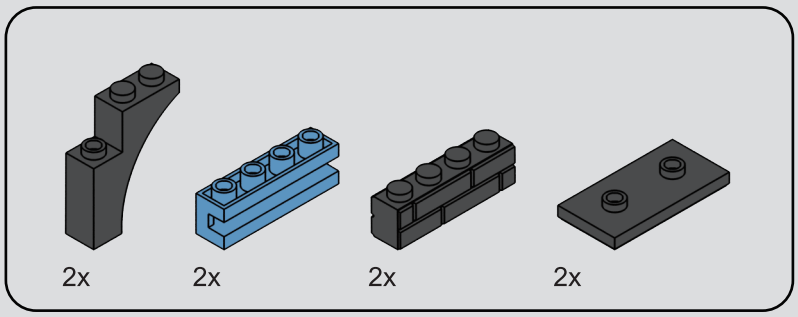

205

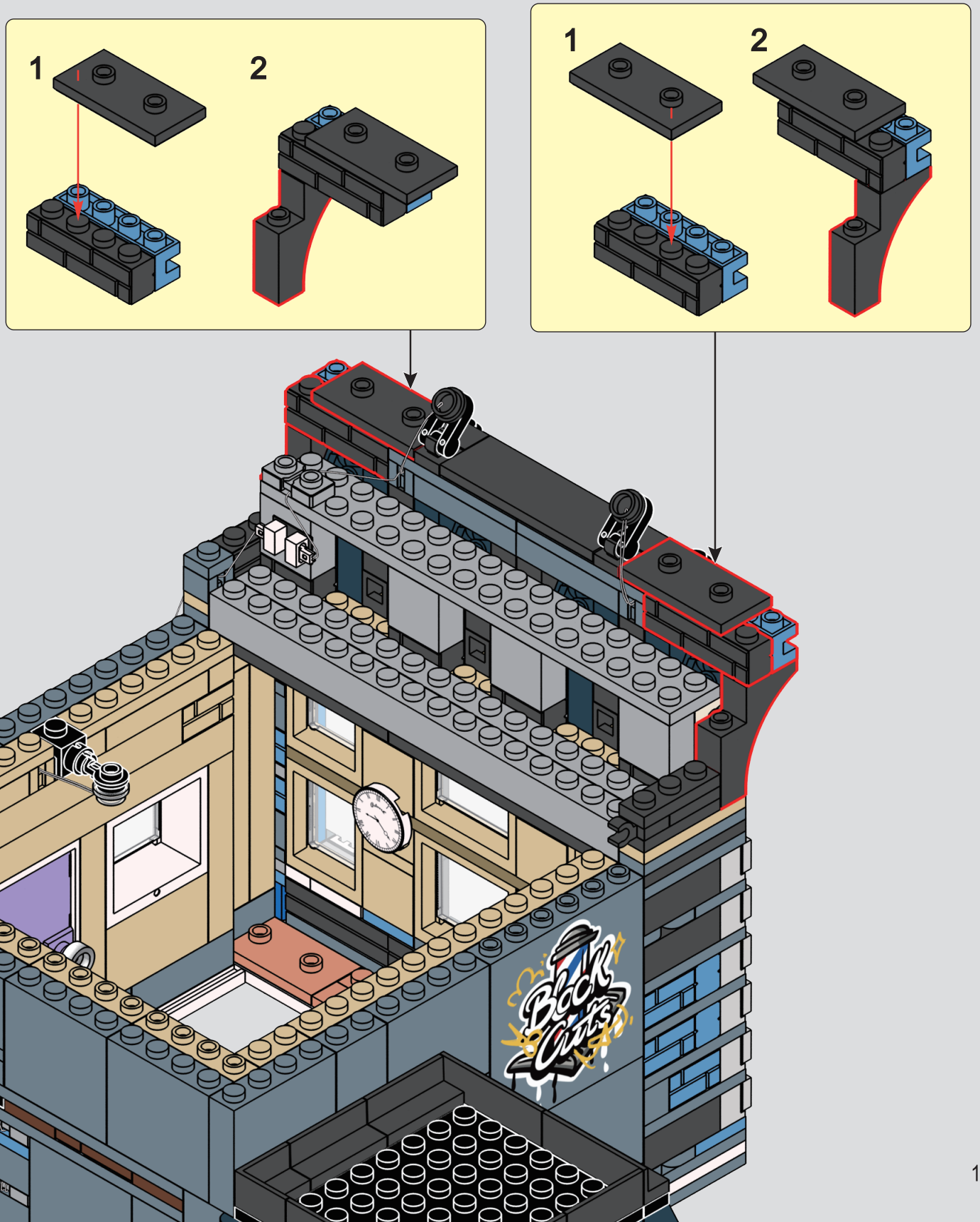

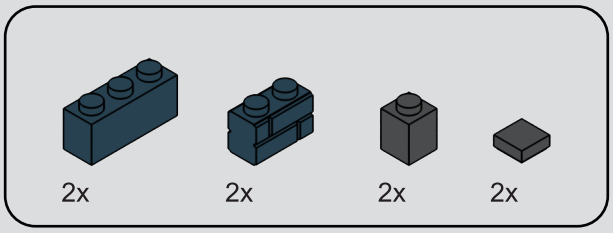

206

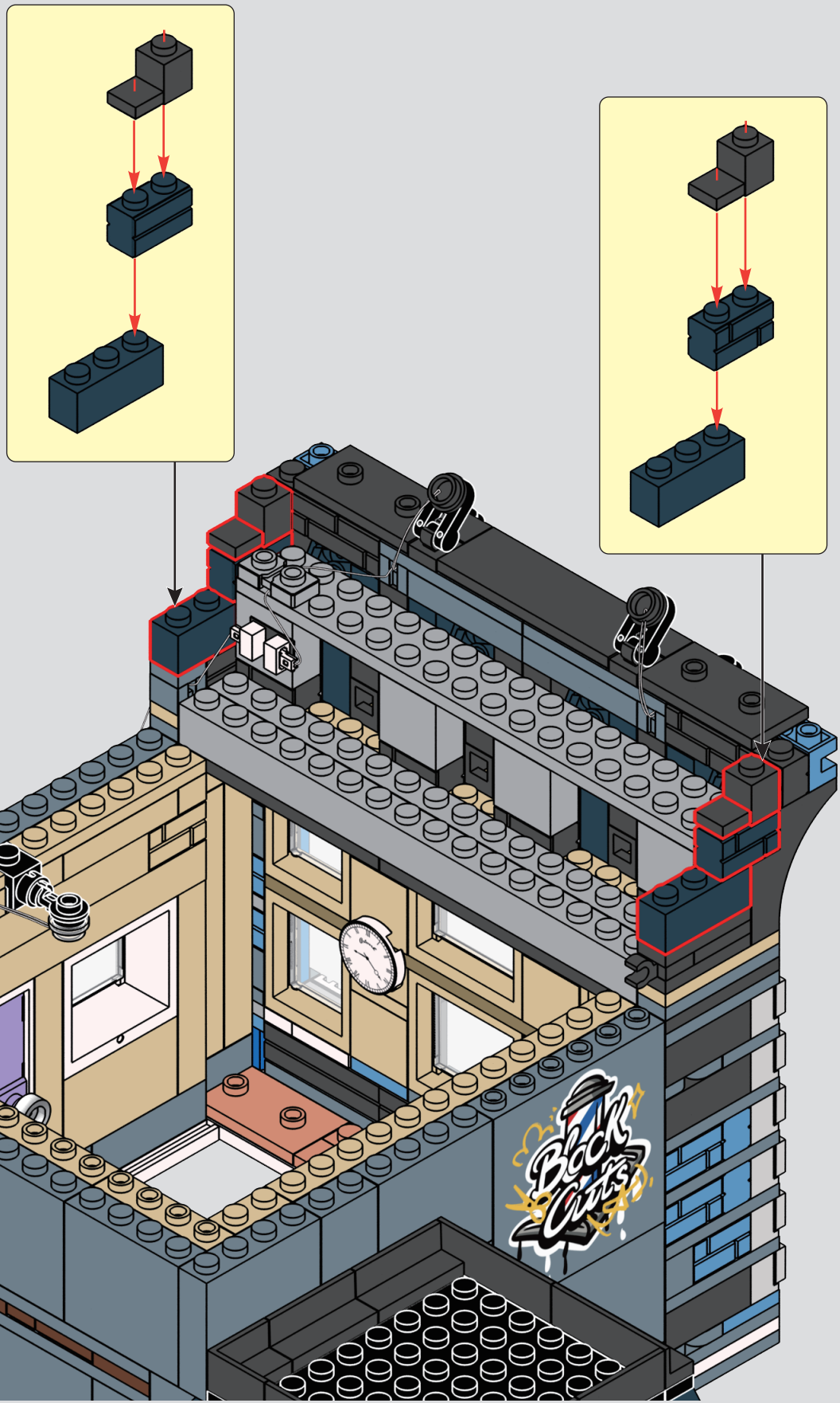

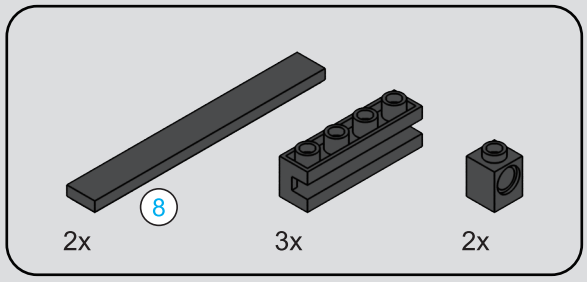



207

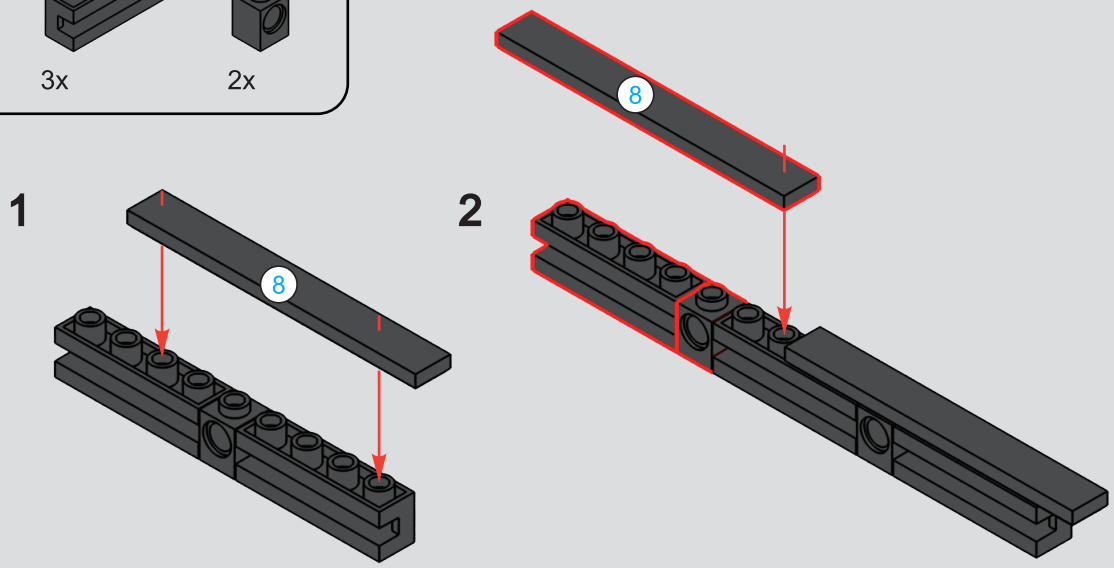

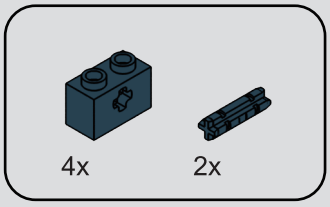

208

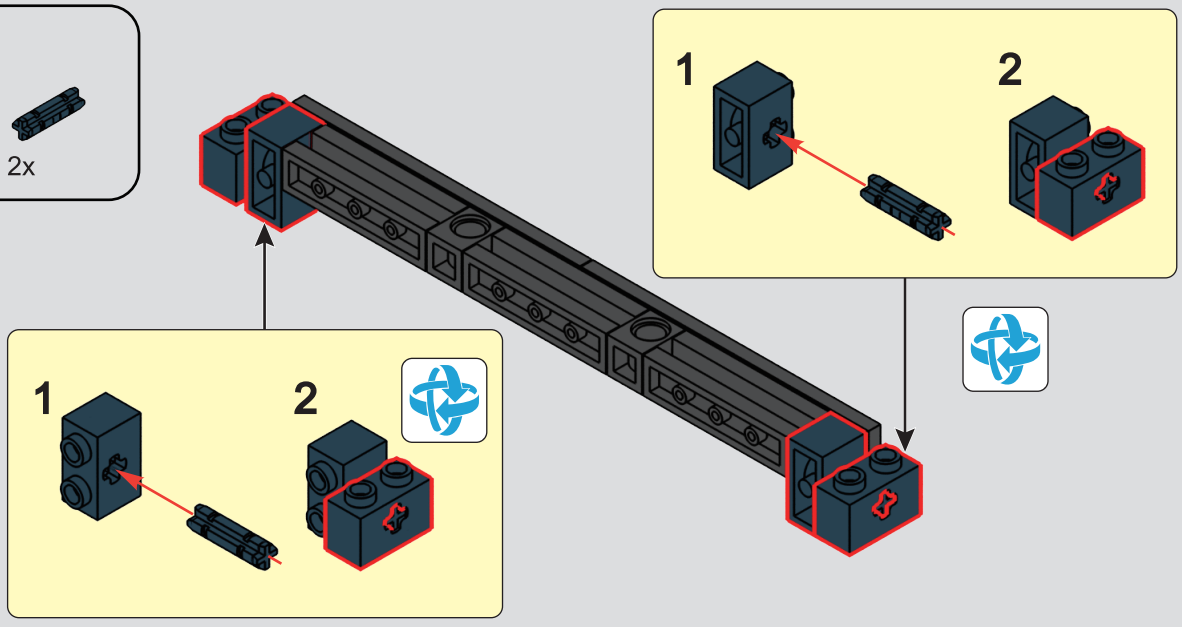

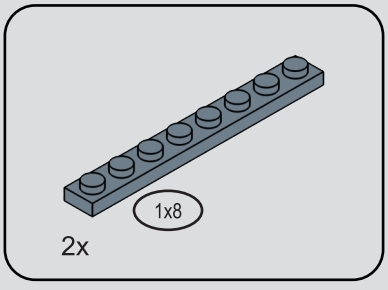

209

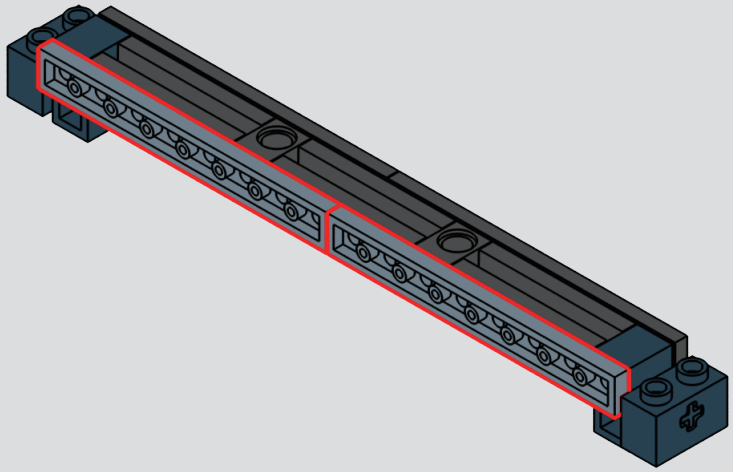

210

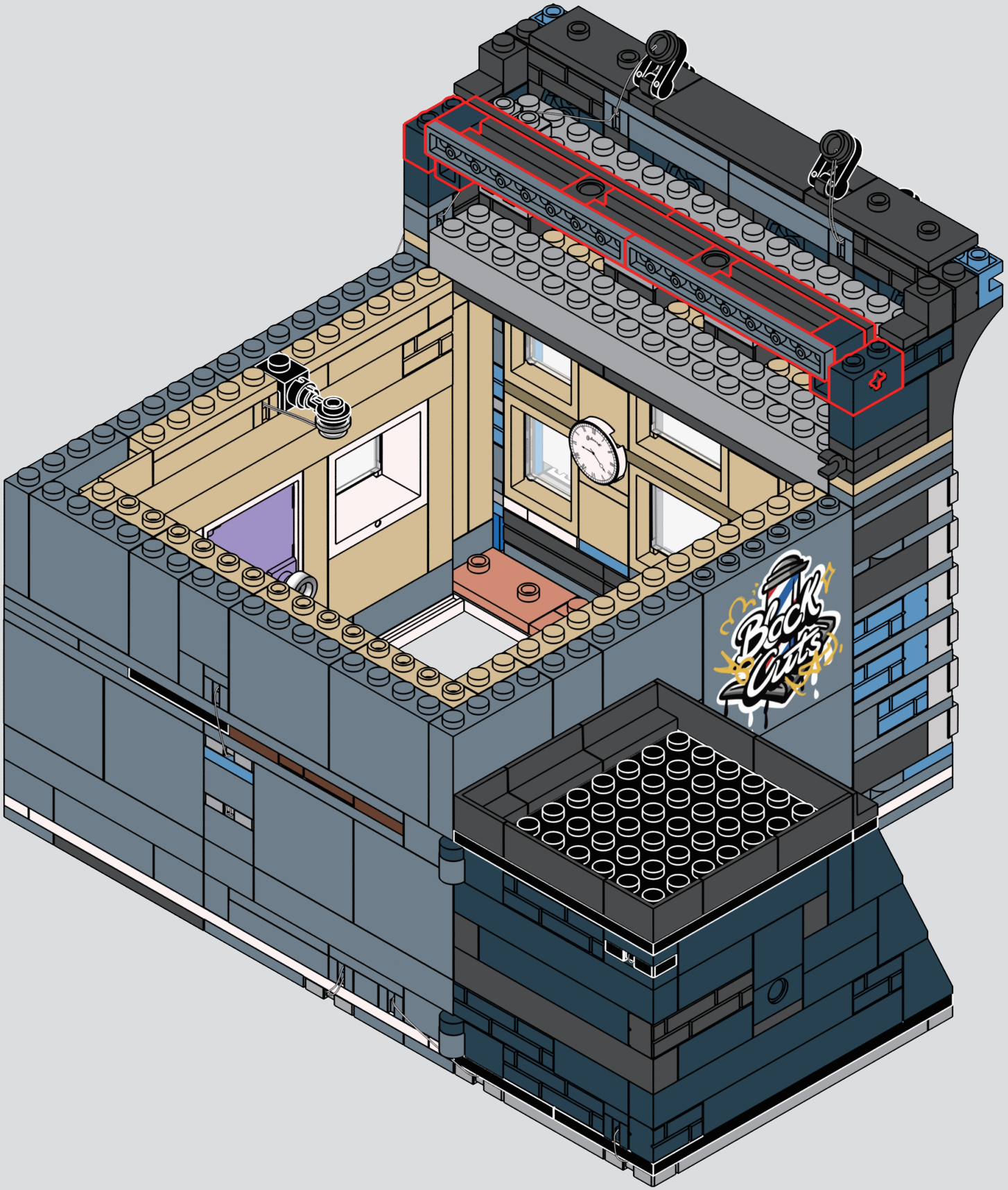

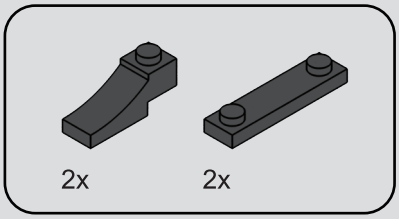

211

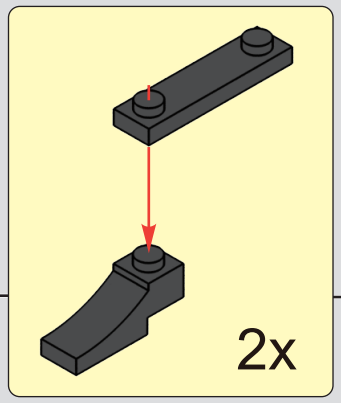

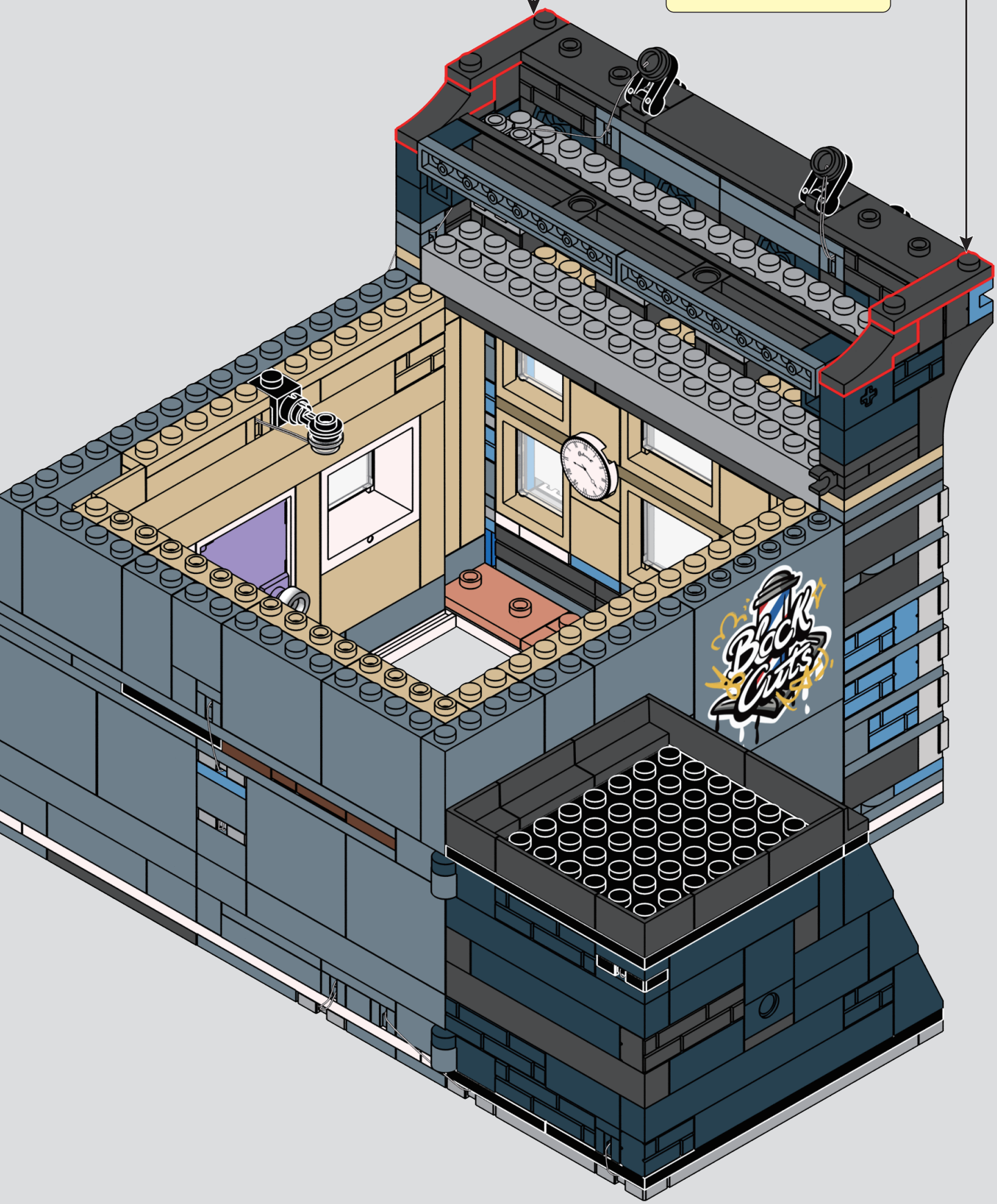

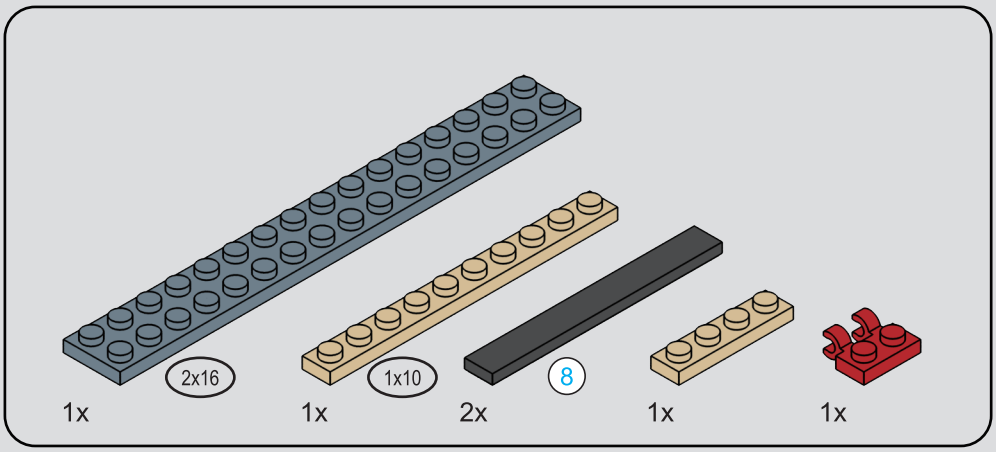

212



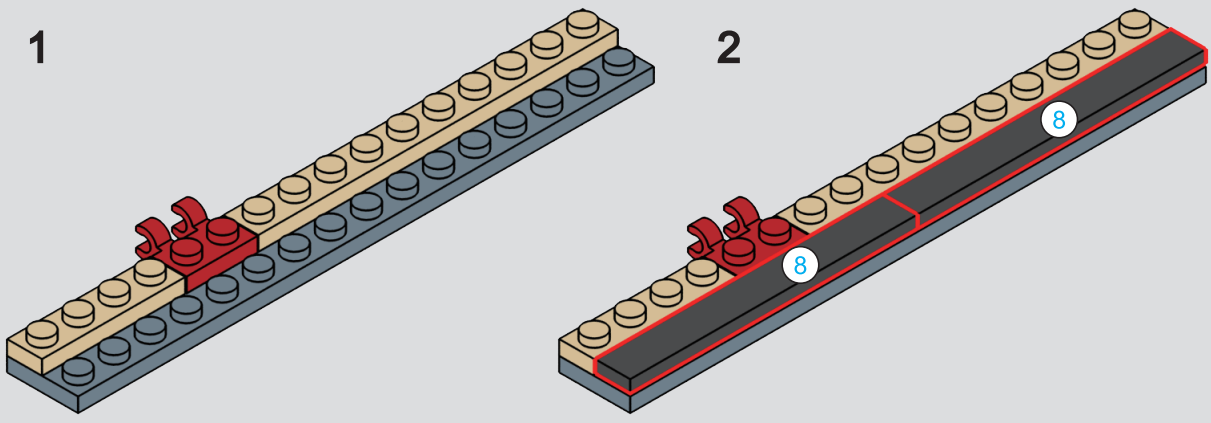

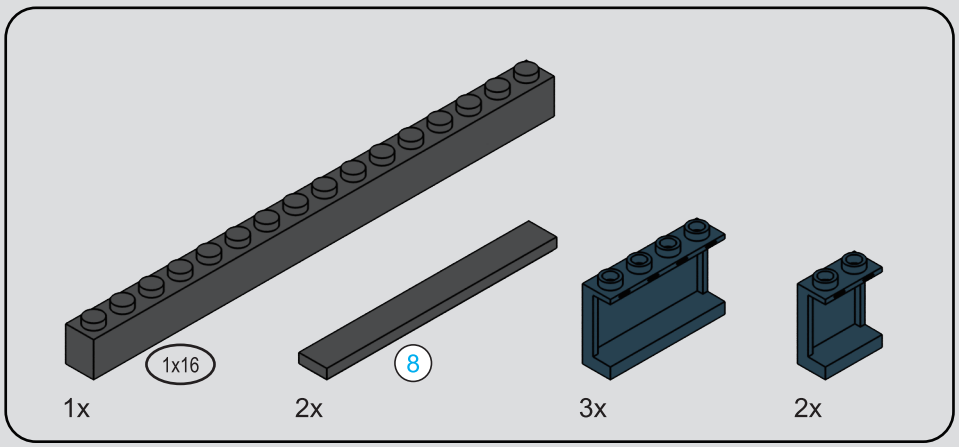

213

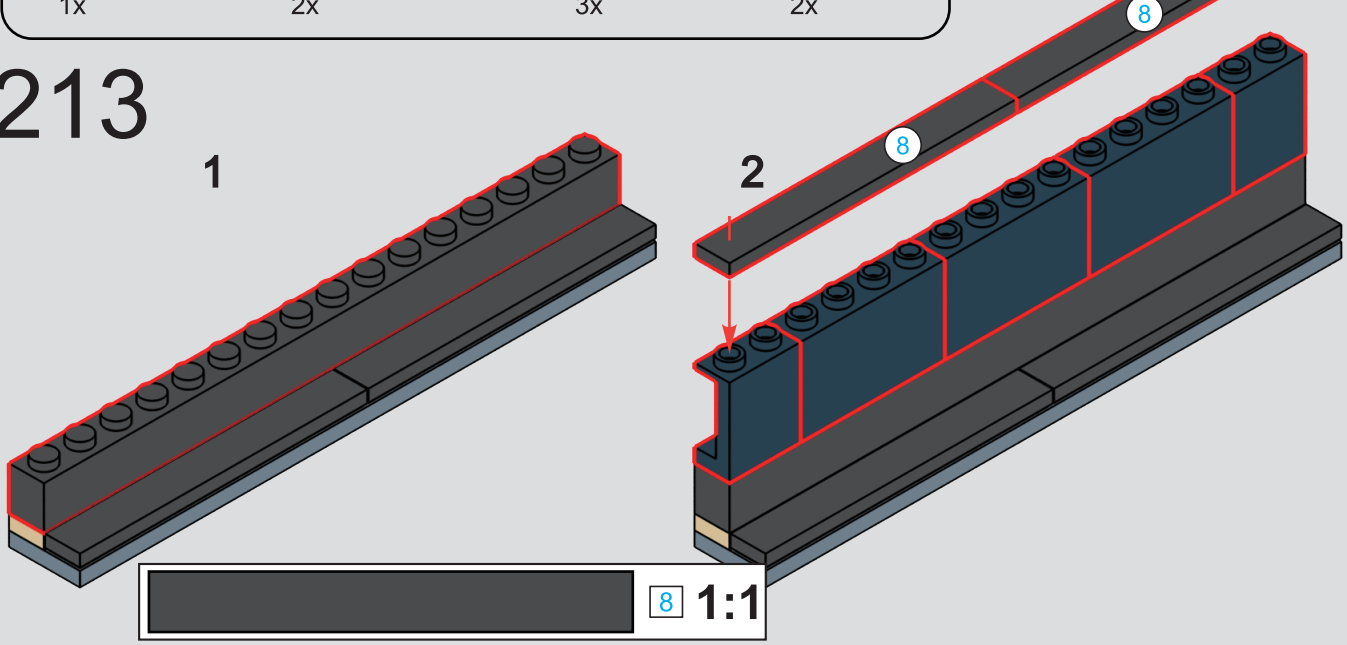

214

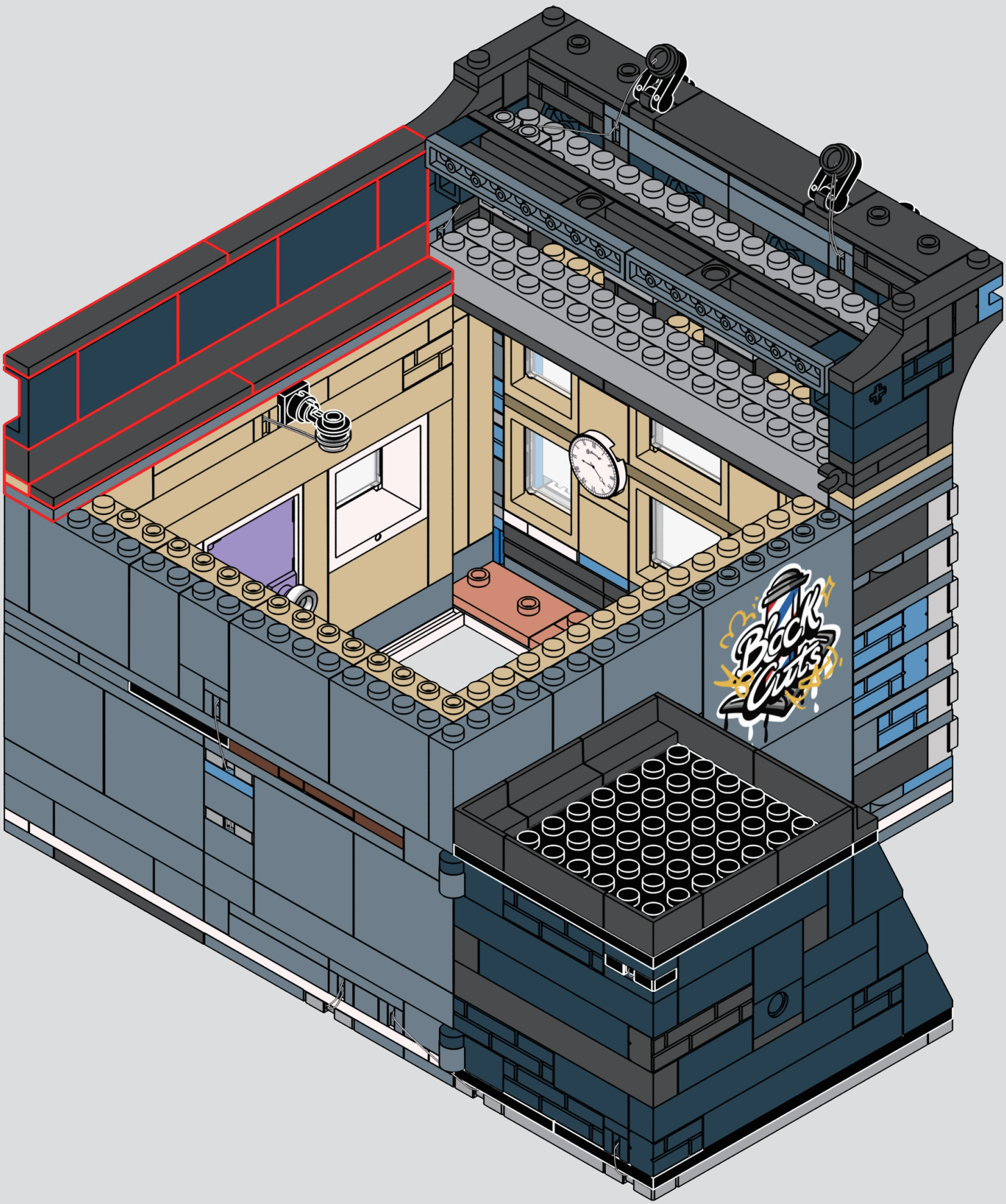

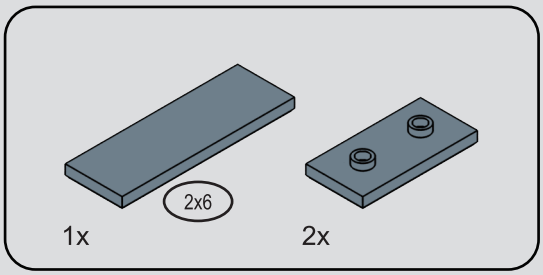

215

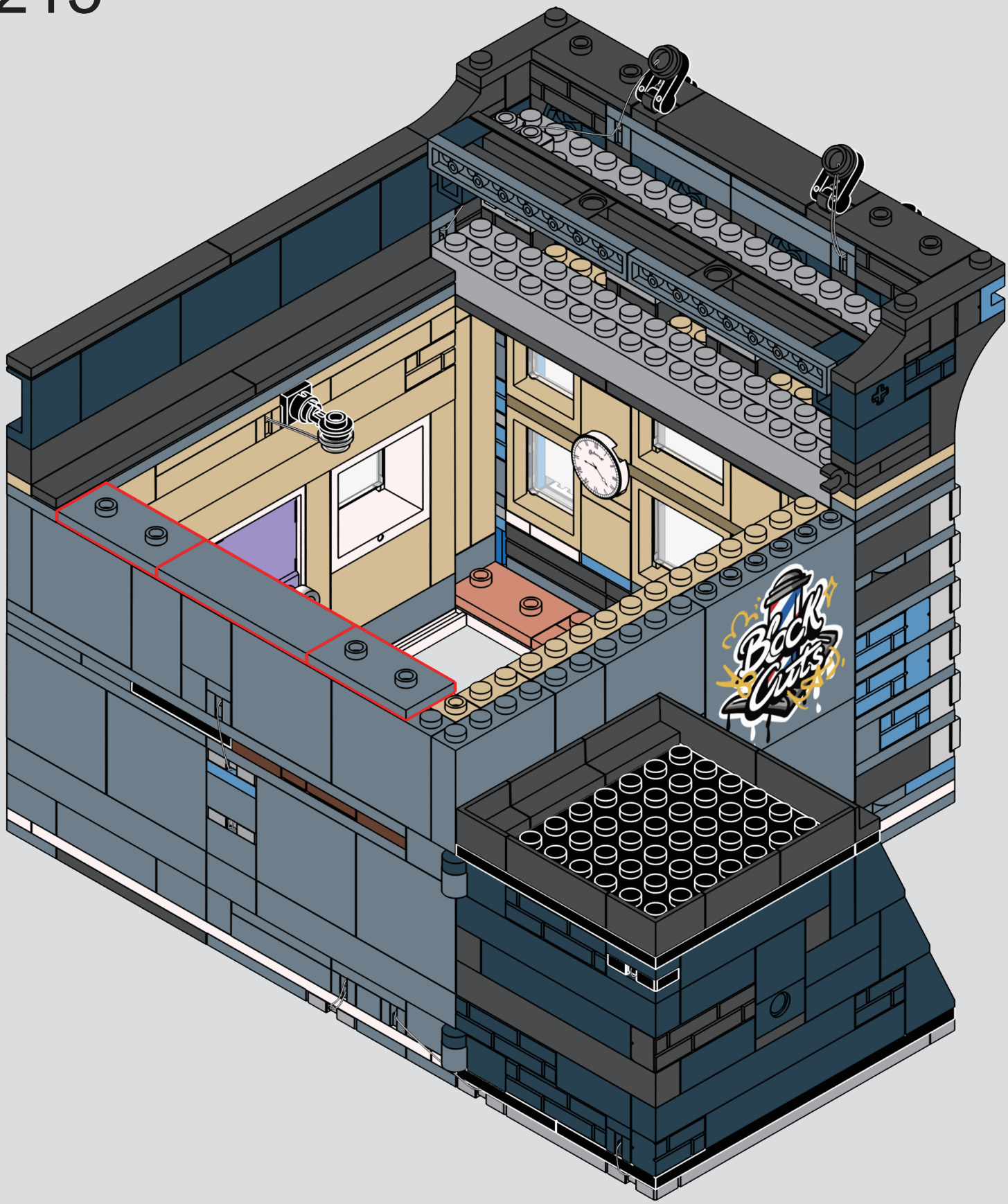

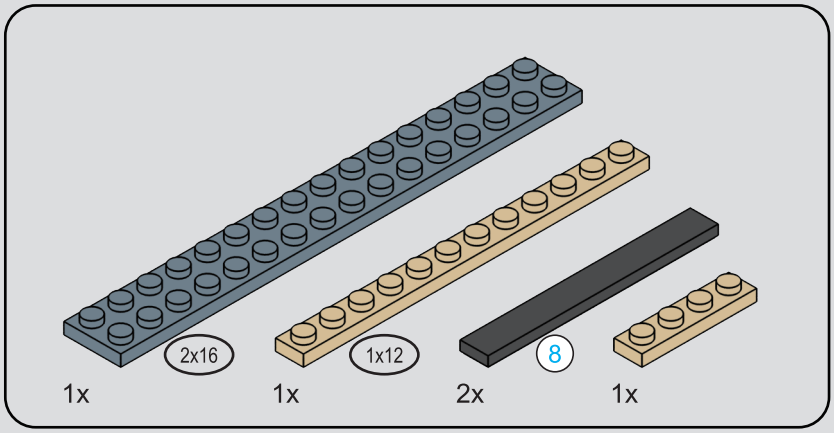

216



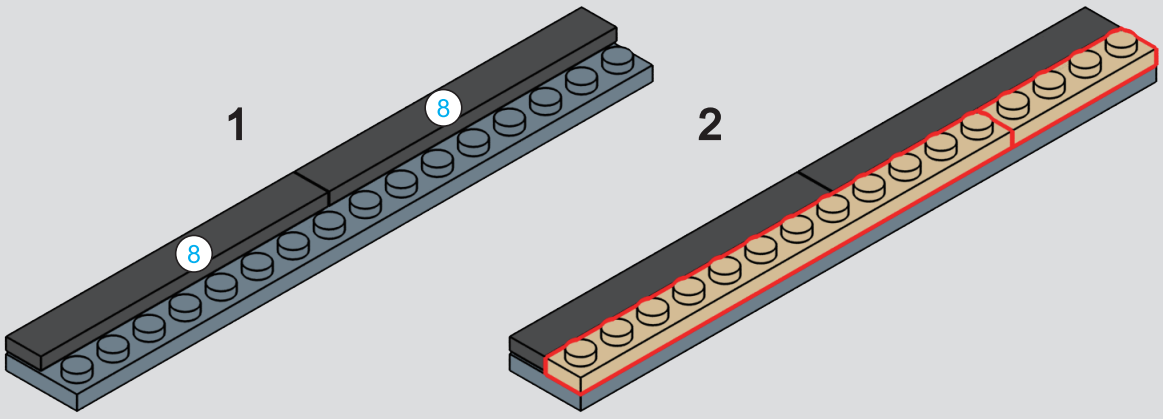

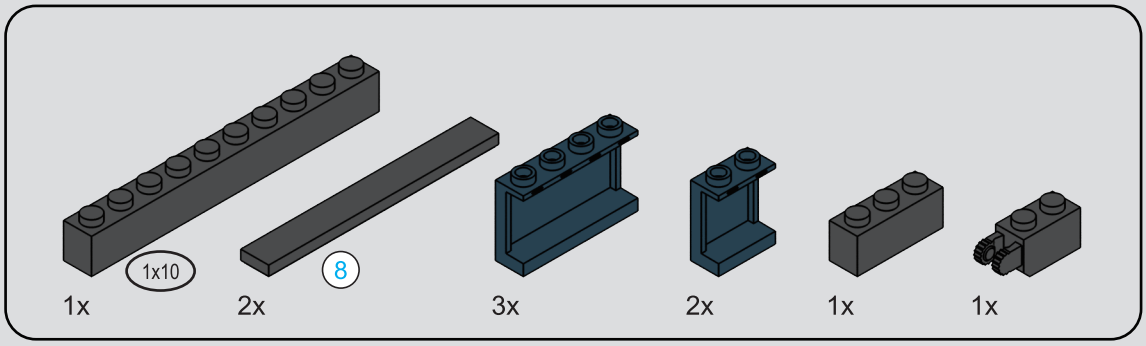

217



218

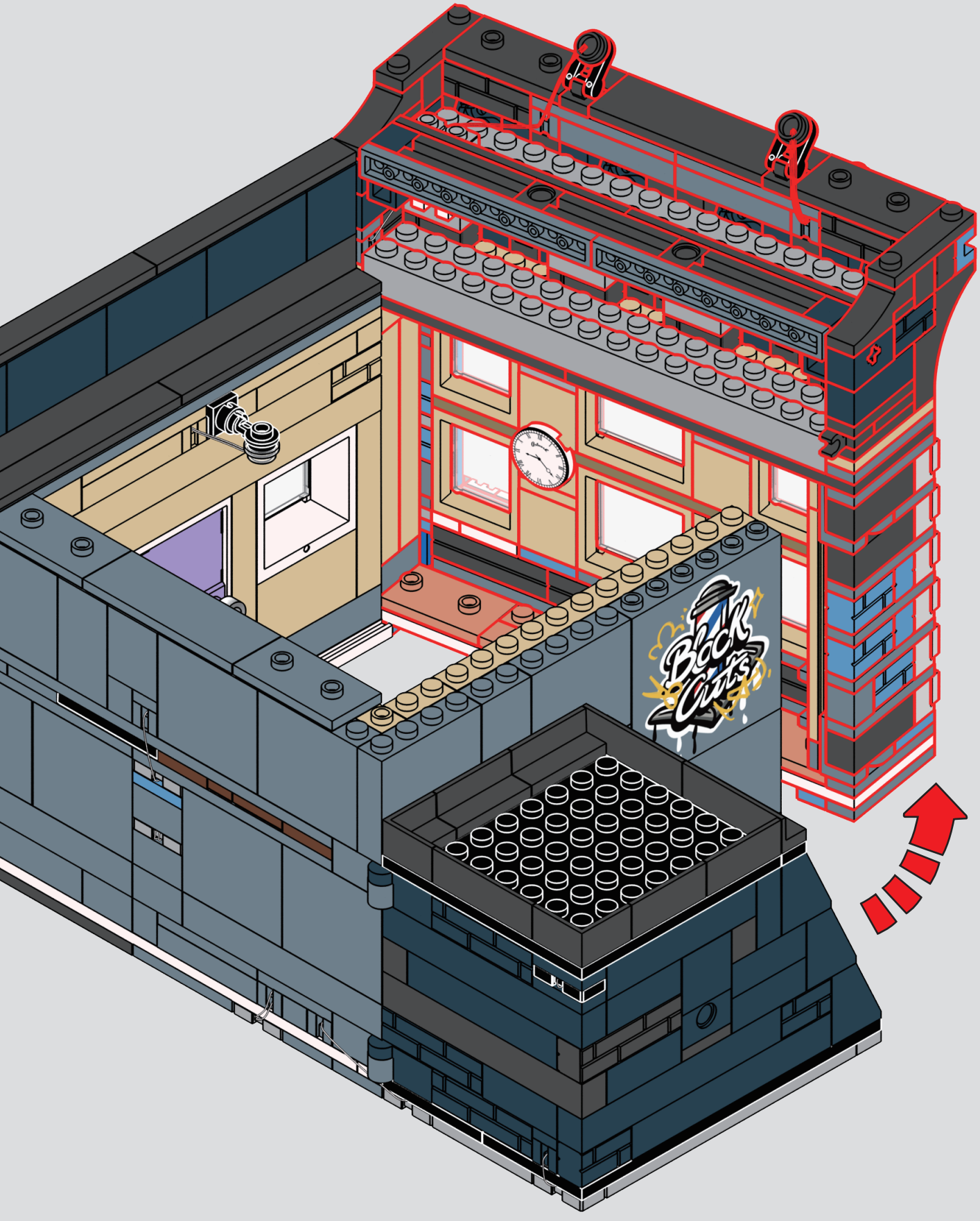

219

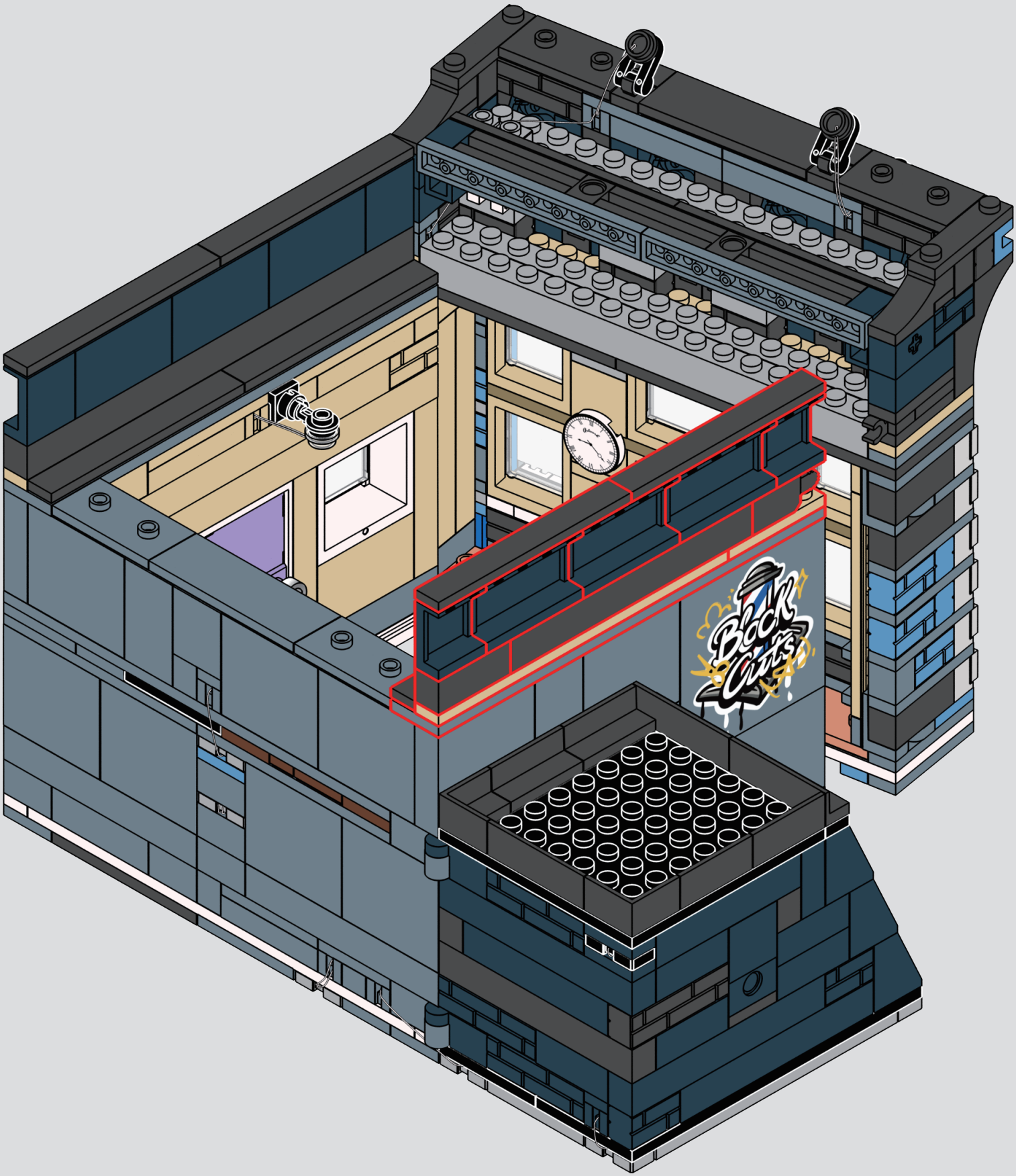

220

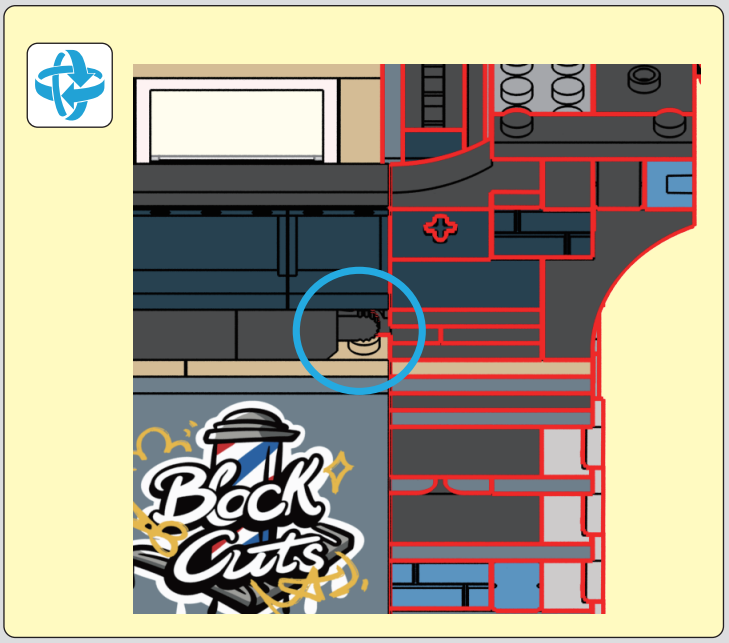

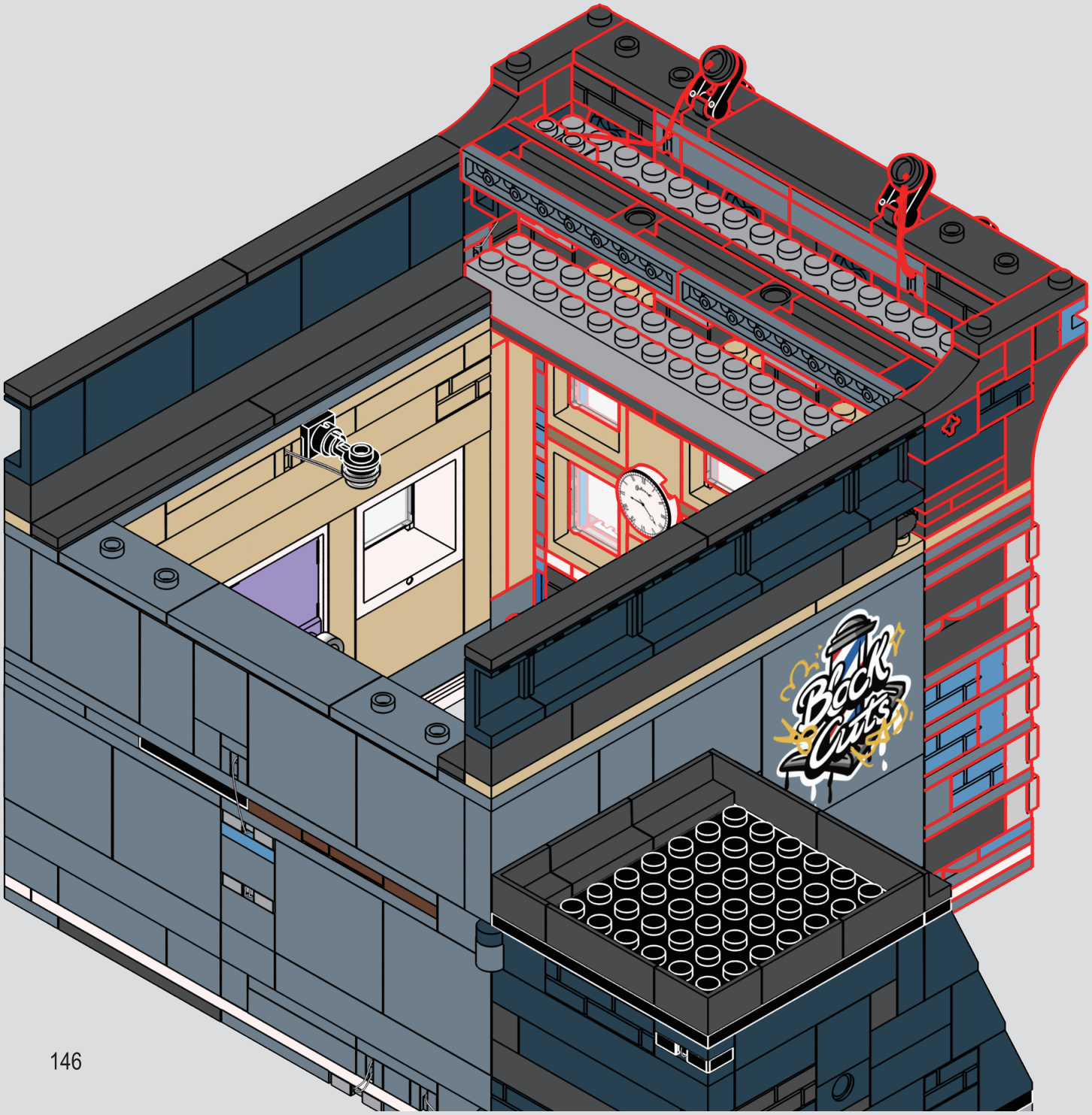

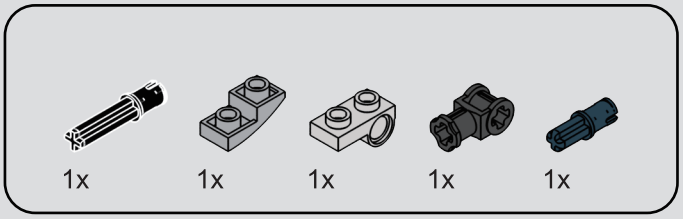

221

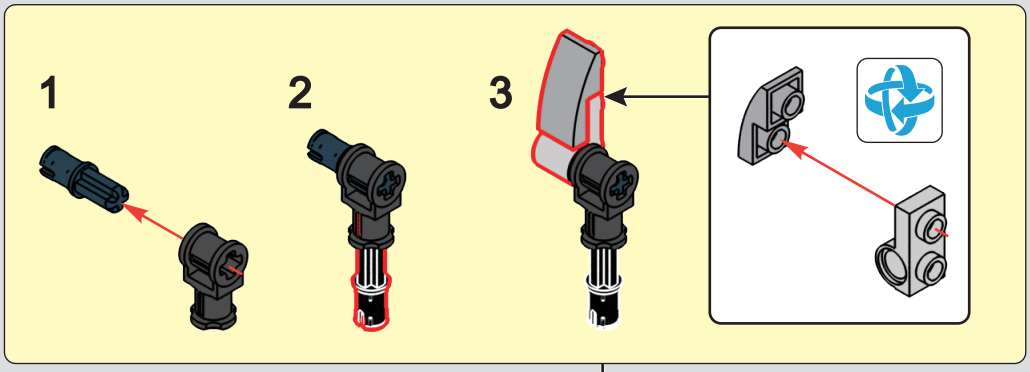

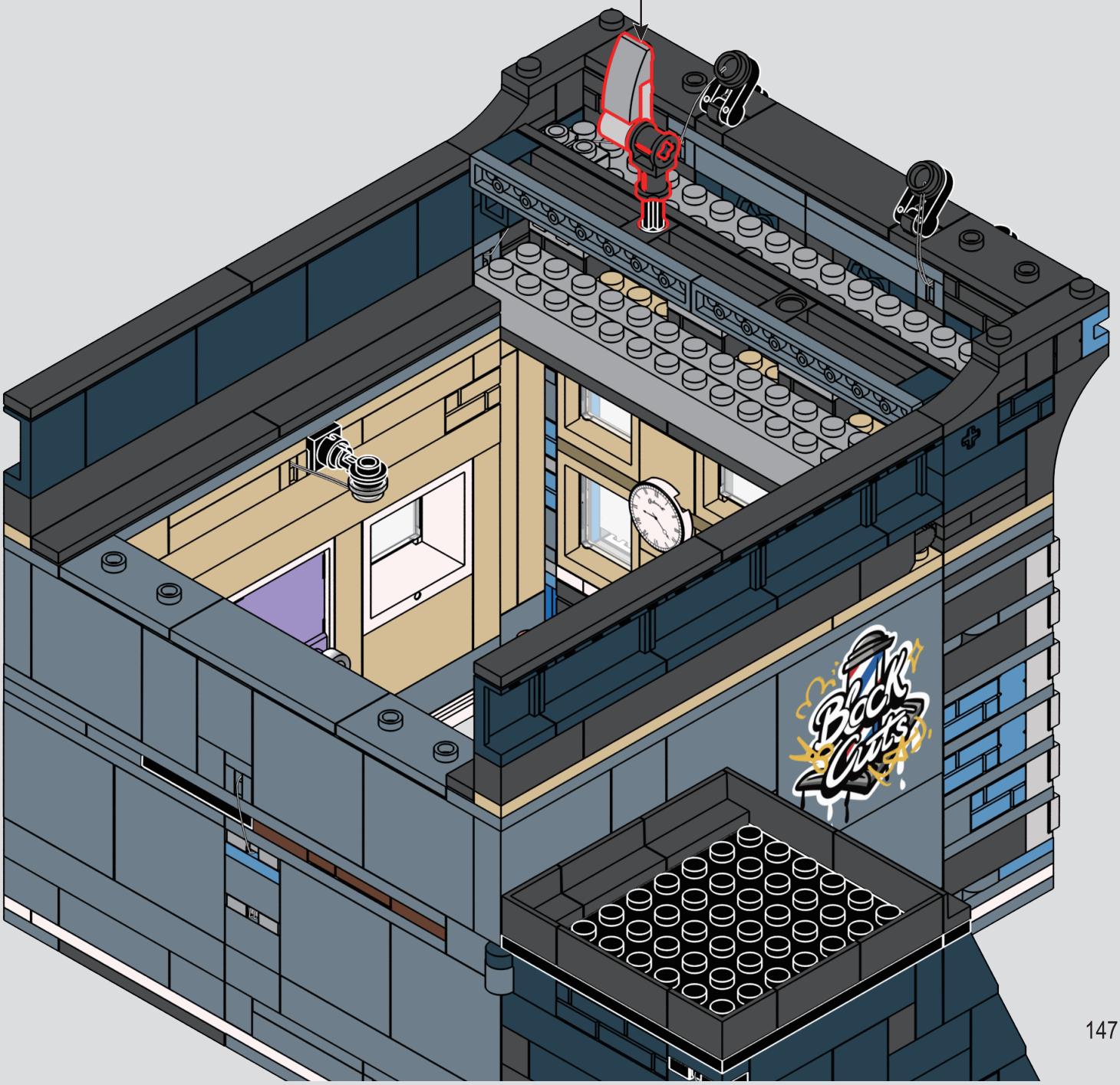

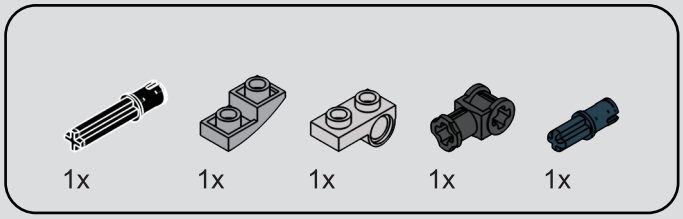

222

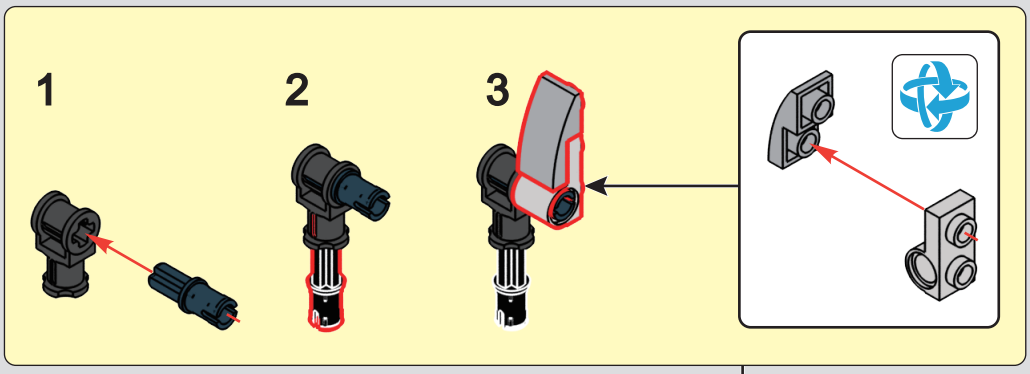

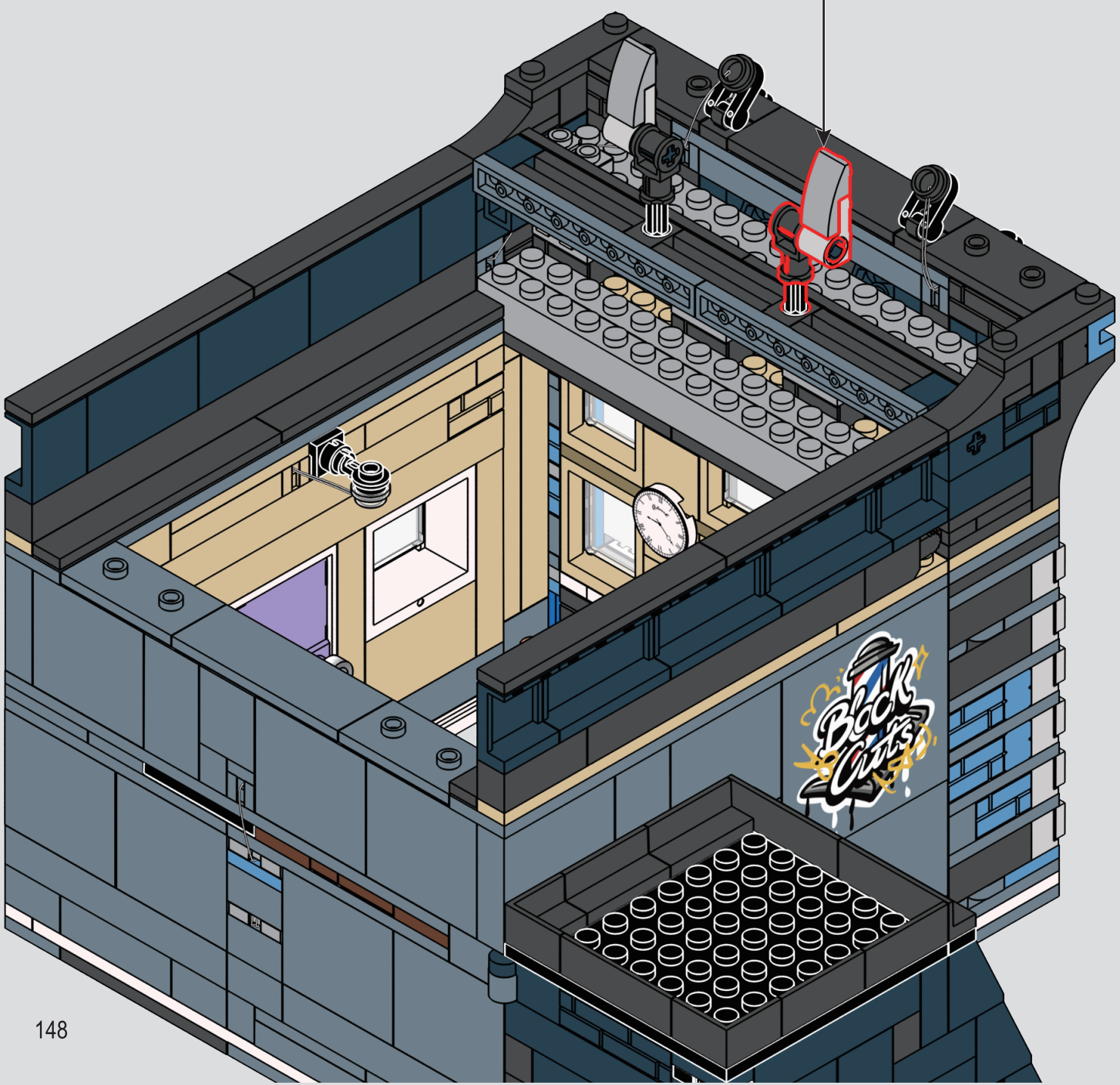

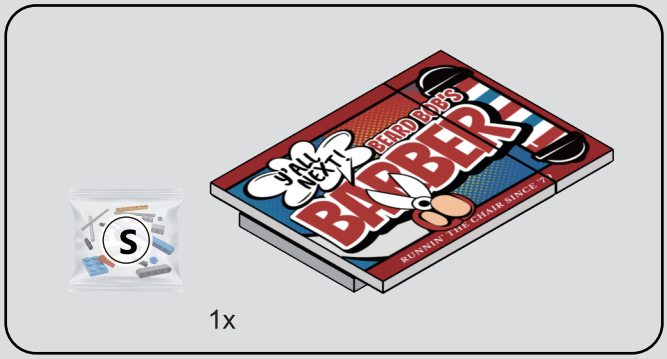

223

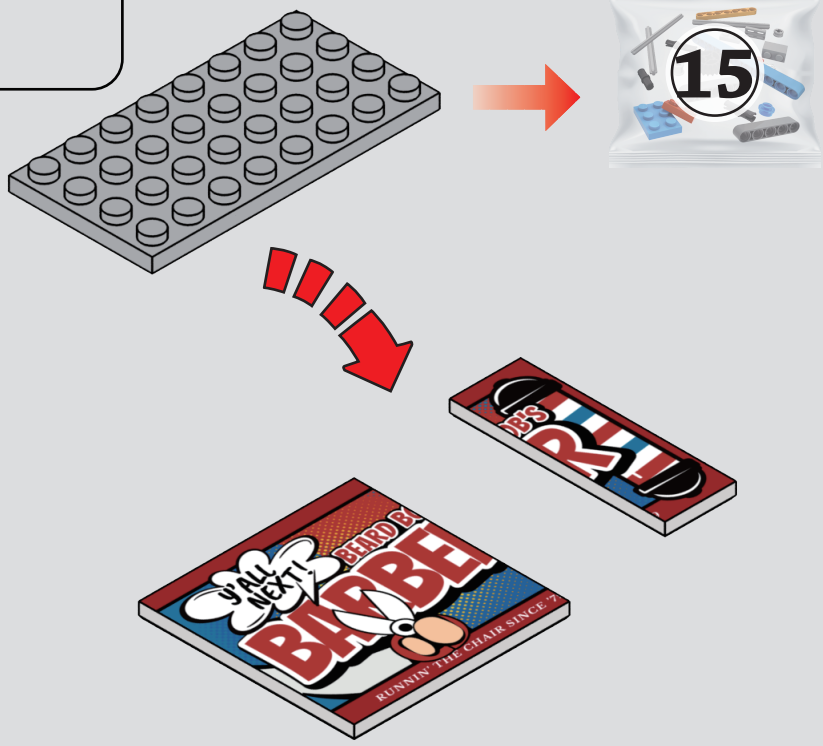

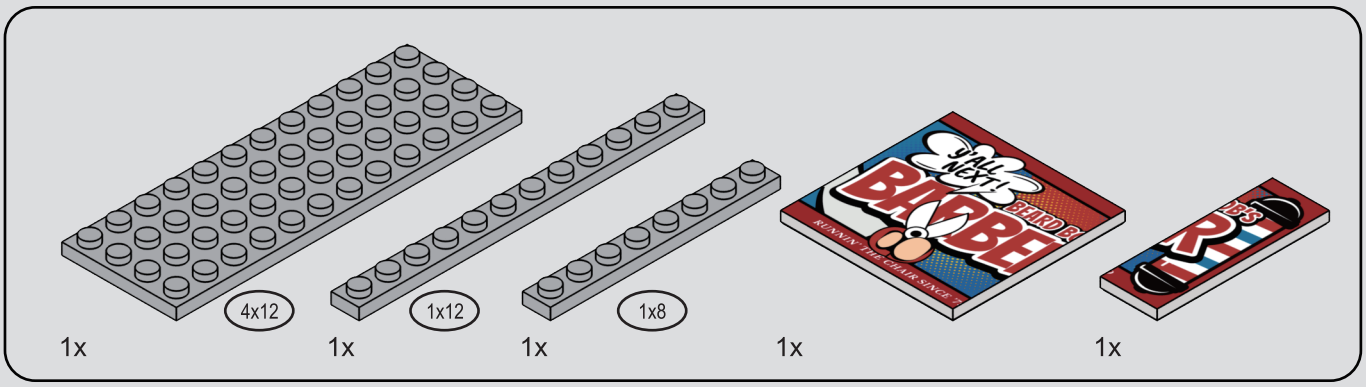

224

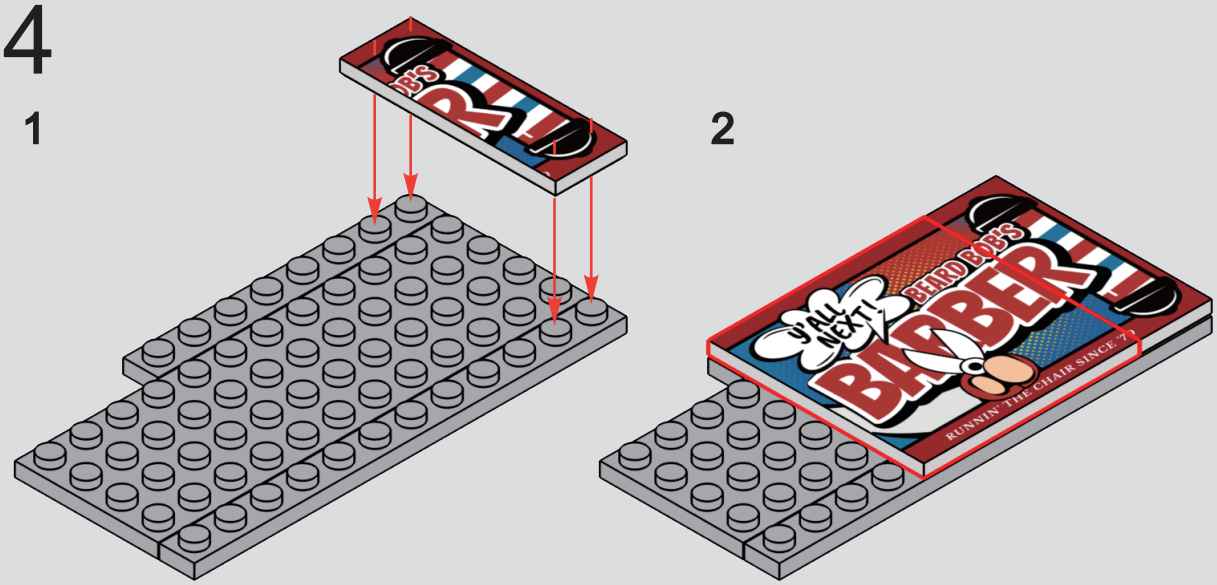

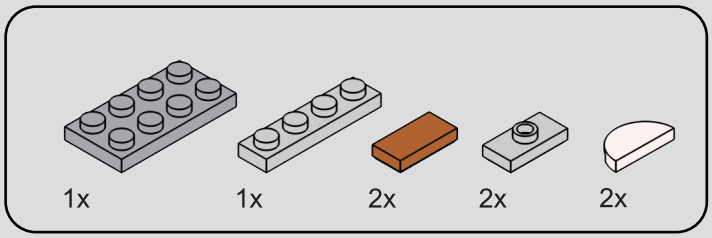
1x
1x
2x
2x
2x

225

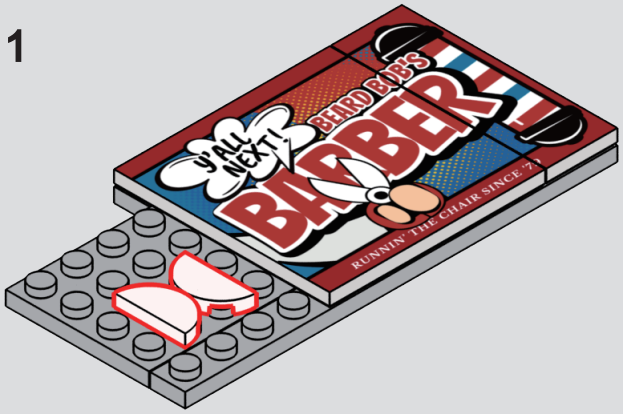
1
Y'ALL NEXT!
BEARD BOB'S
BARBER
RUNNIN' THE CHAIR SINCE '71

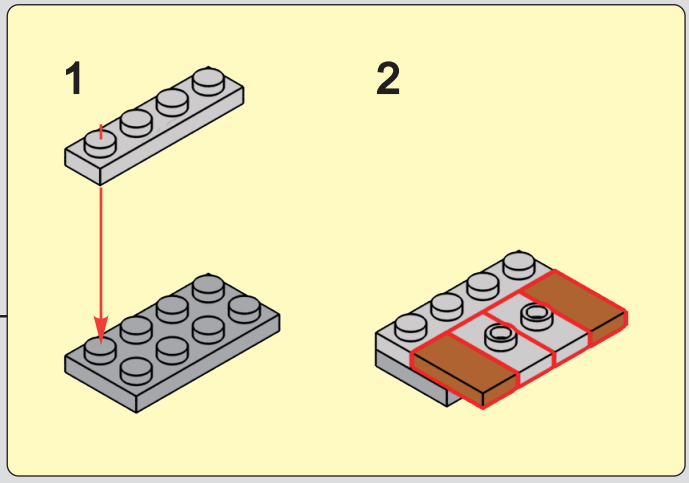
1
2

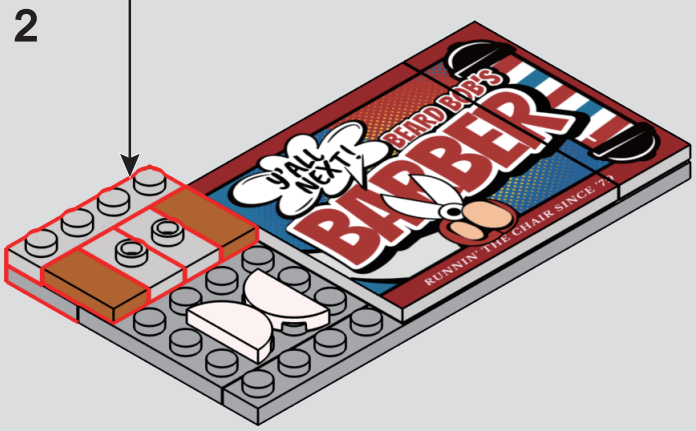
2
Y'ALL NEXT!
BEARD BOB'S
BARBER
RUNNIN' THE CHAIR SINCE '71

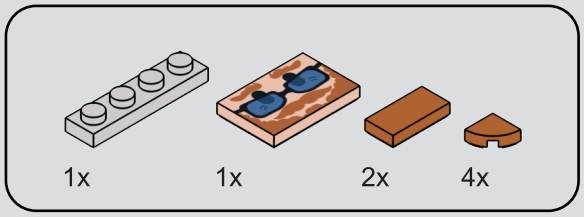
1x
1x
2x
4x

226

1
2
BEARD BOB'S
Y'ALL NEXT!
BARBER
RUNNIN' THE CHAIR SINCE '71

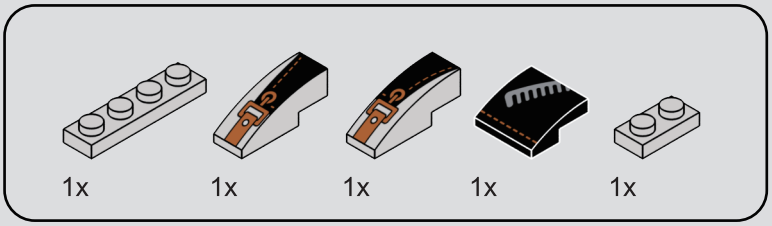
1x
1x
1x
1x
1x

227

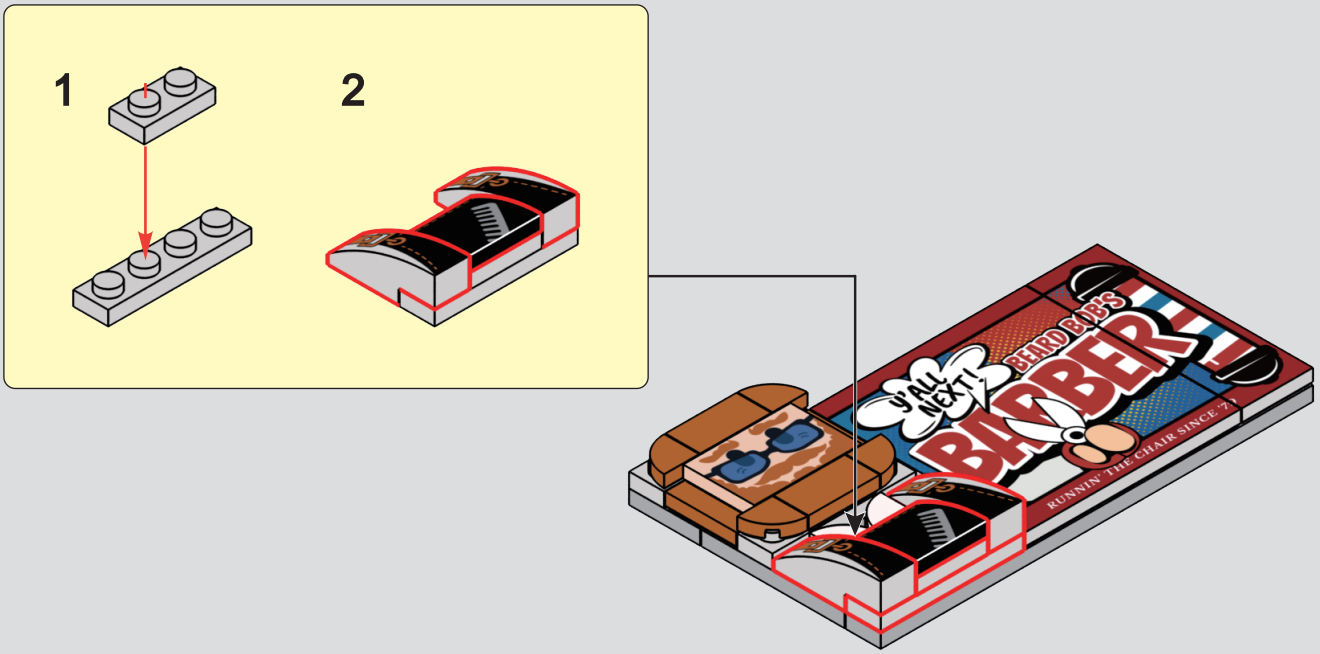
1
2
BEARD BOB'S
Y'ALL NEXT!
BARBER
RUNNIN' THE CHAIR SINCE '71

228

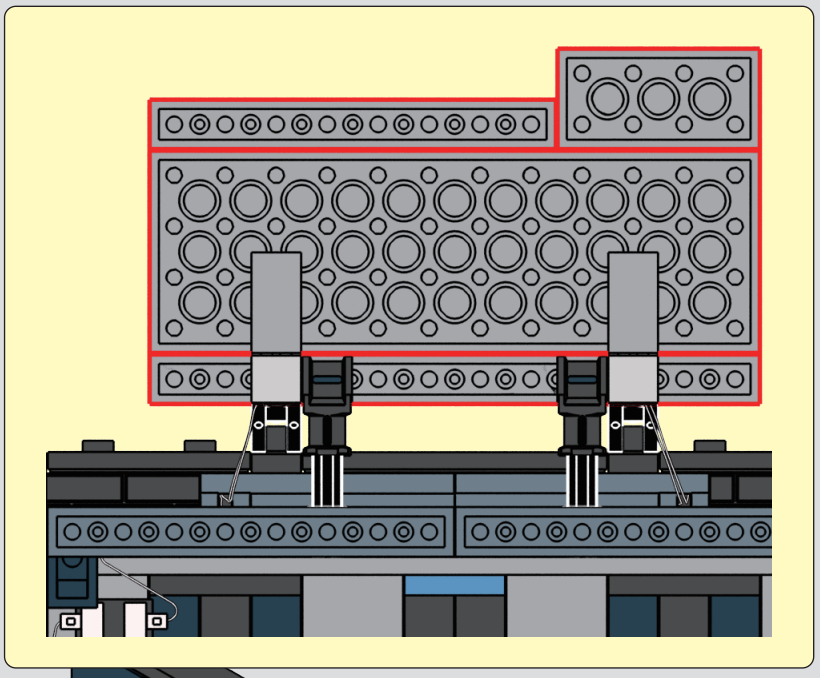

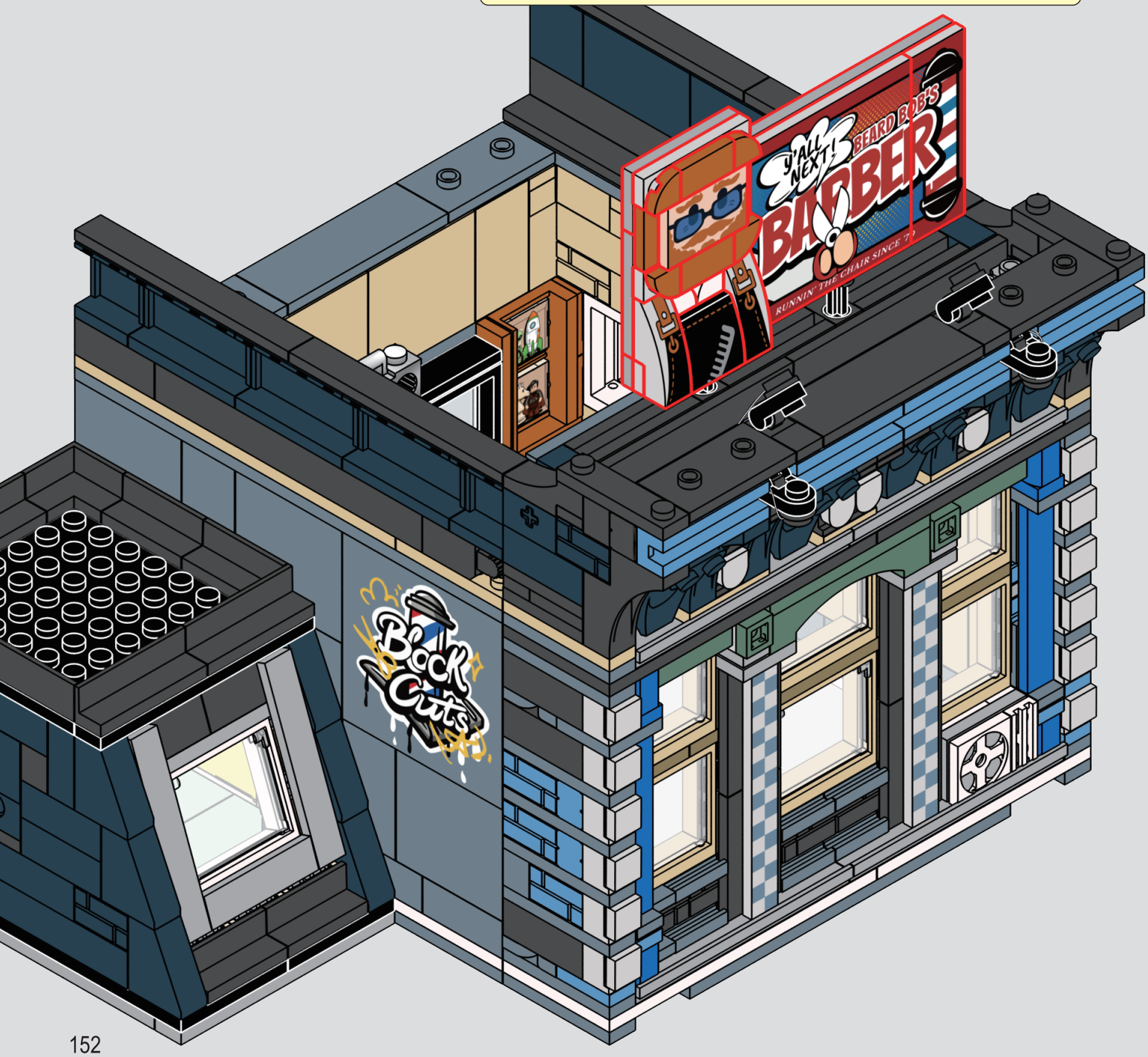
Y'ALL NEXT!
BEARD BOB'S
BARBER
RUNNIN' THE CHAIR SINCE '71
Back Cuts


15
F
S
Back Cuts
BEARD BOB'S BARBER
FADE | LINE-UP | BRAIDS | LOCS
718-555-XXX
SHAVE & GROOMING
HOT SHAVE | BEARD TRIM | RAZOR CUT
BARBER

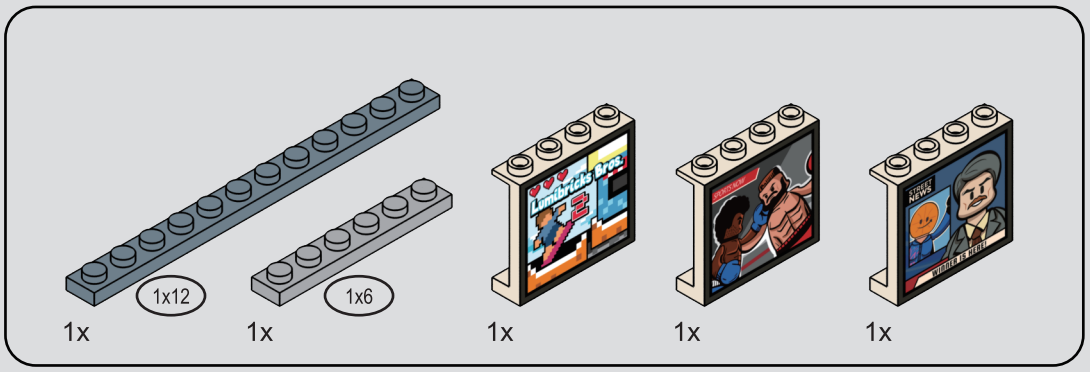

229

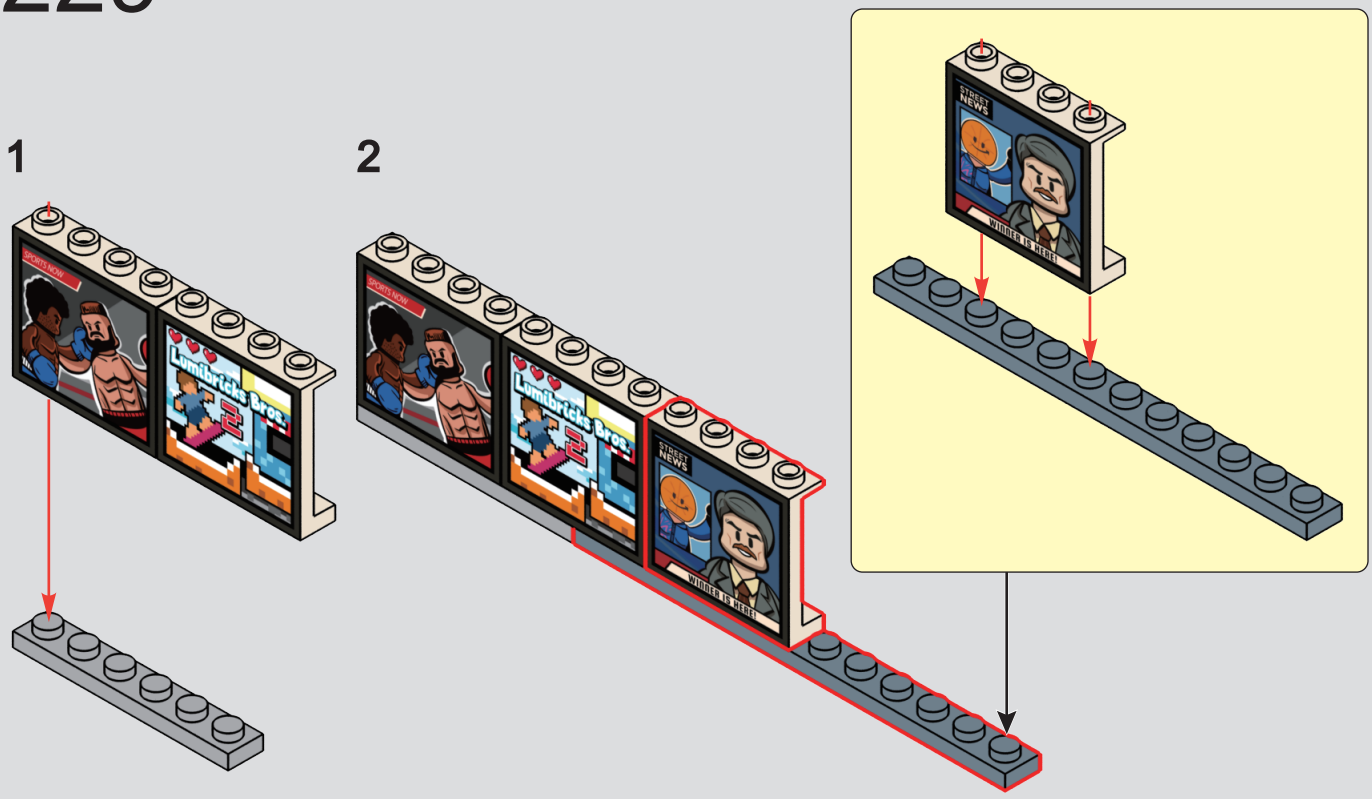

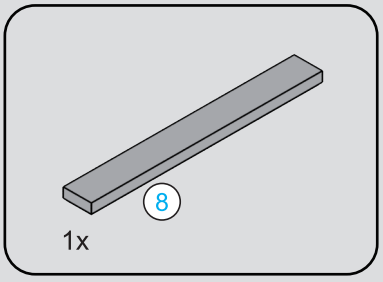



230

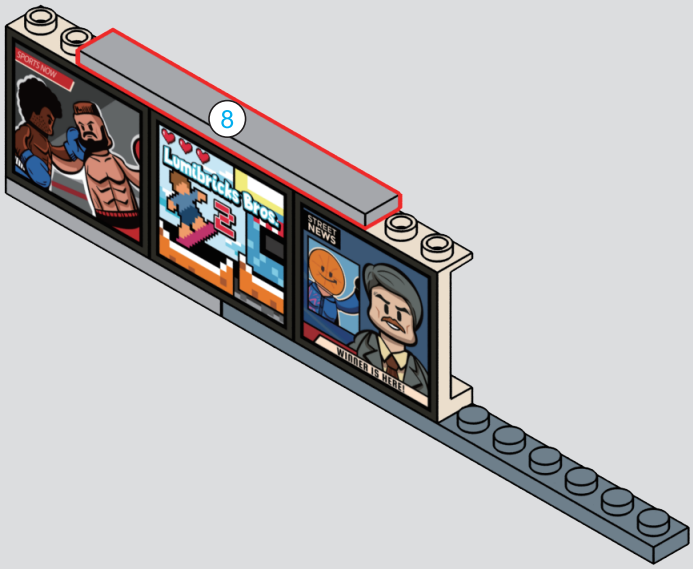

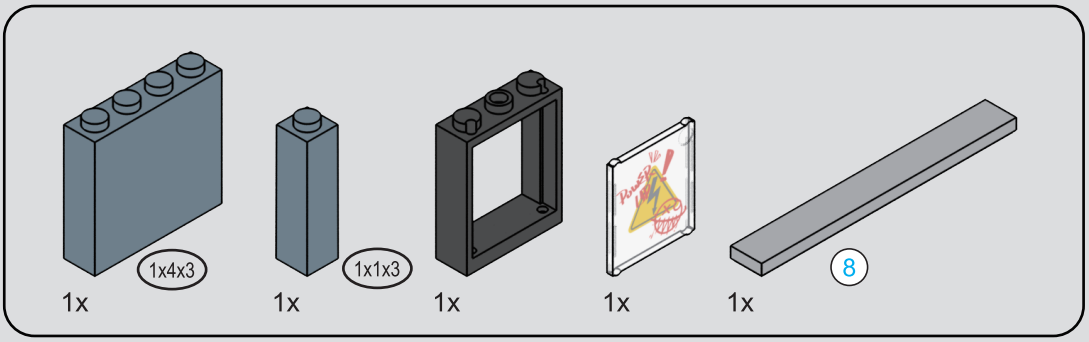

231

1

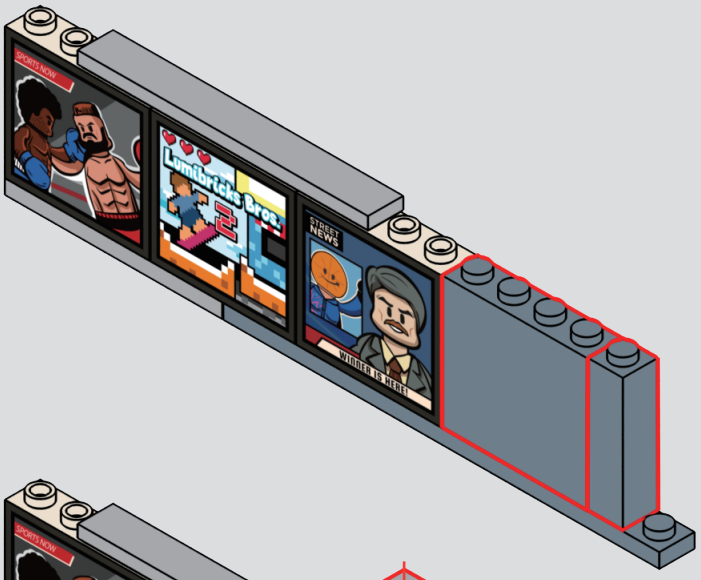

2

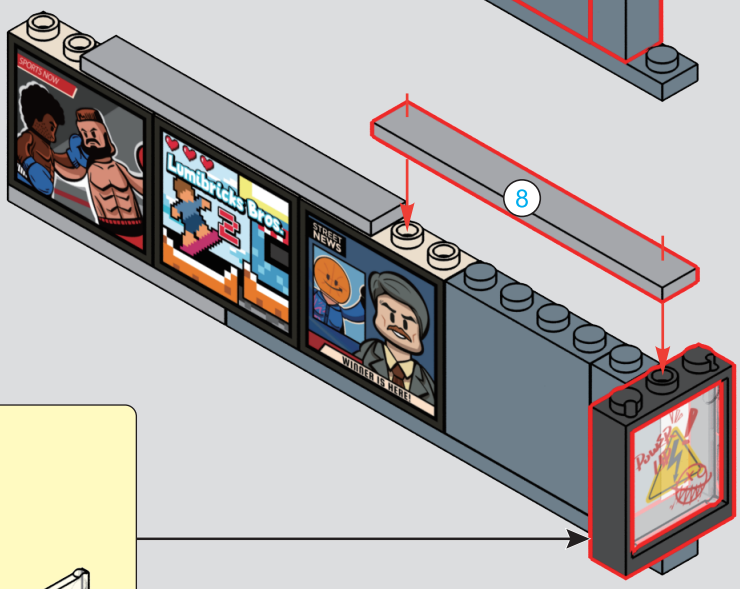

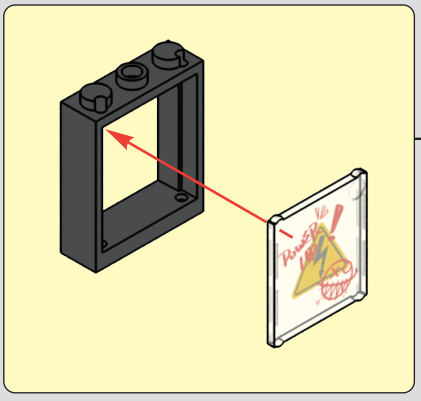



232



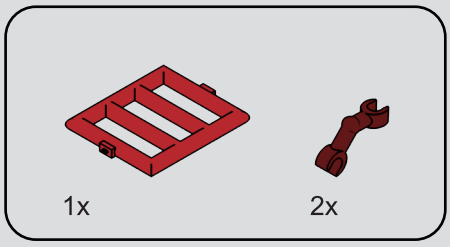

233

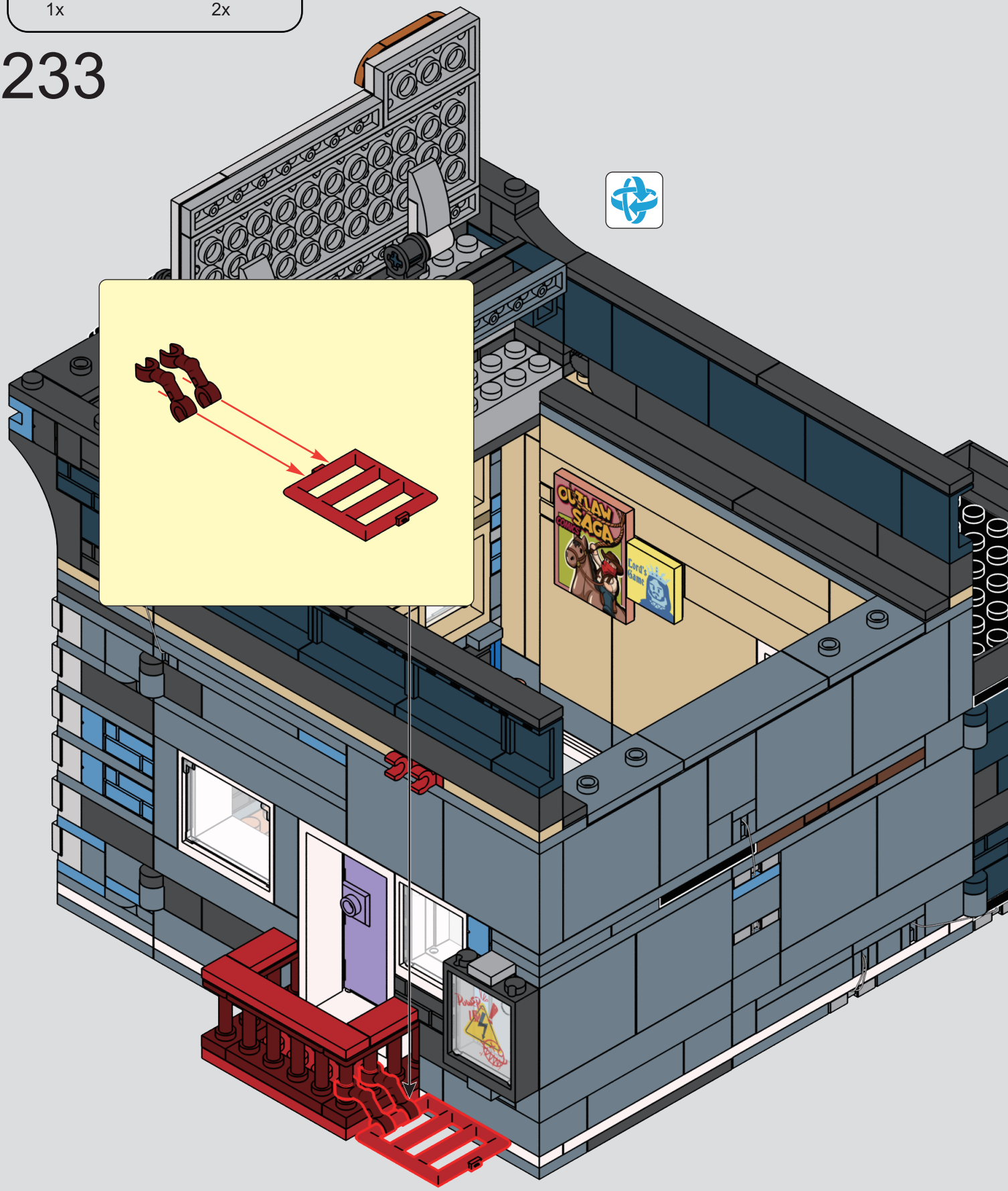

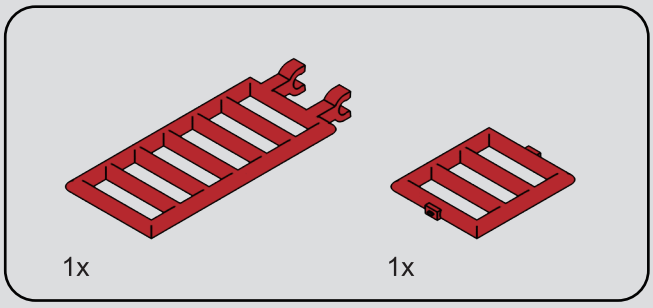

234

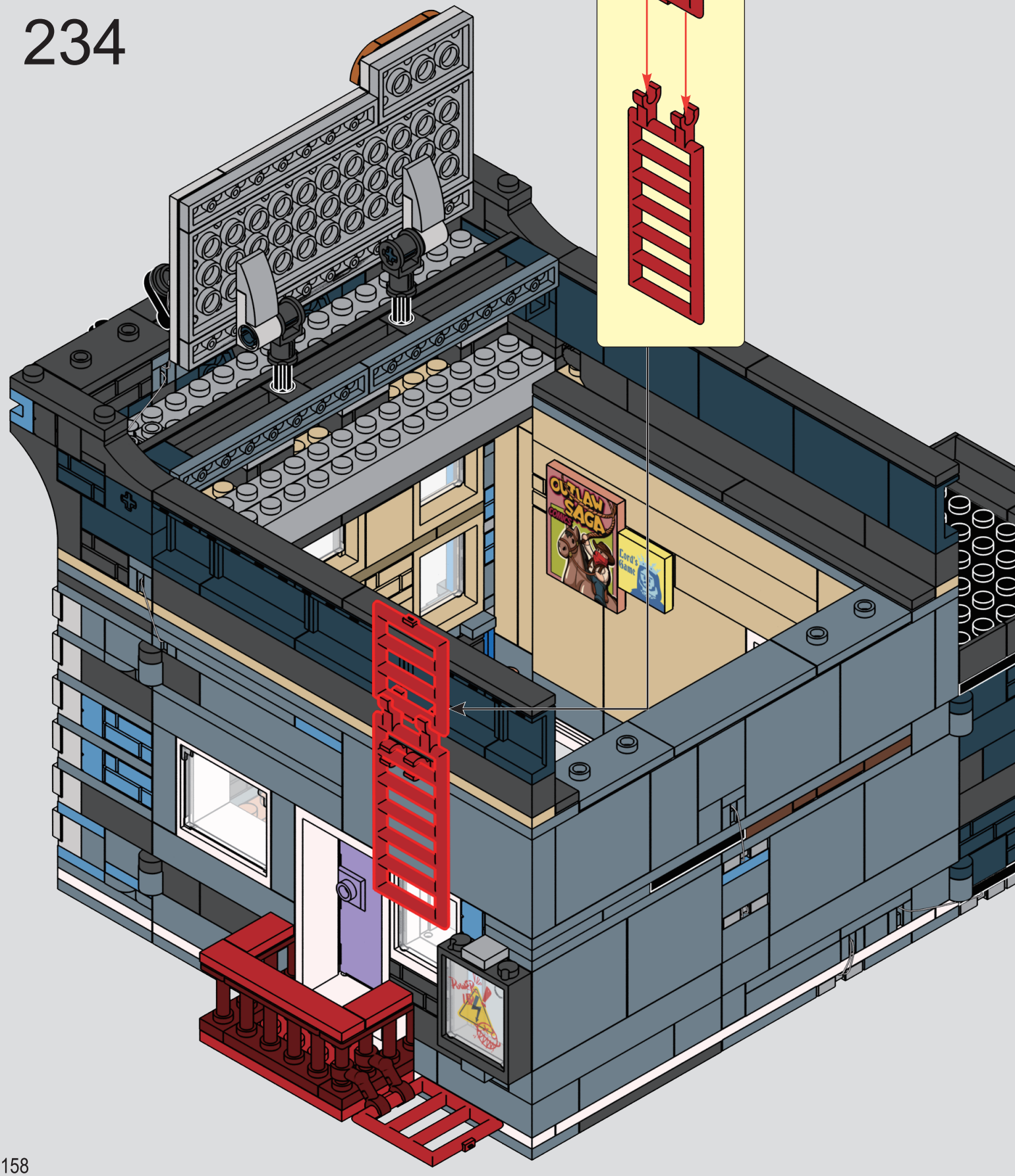

235

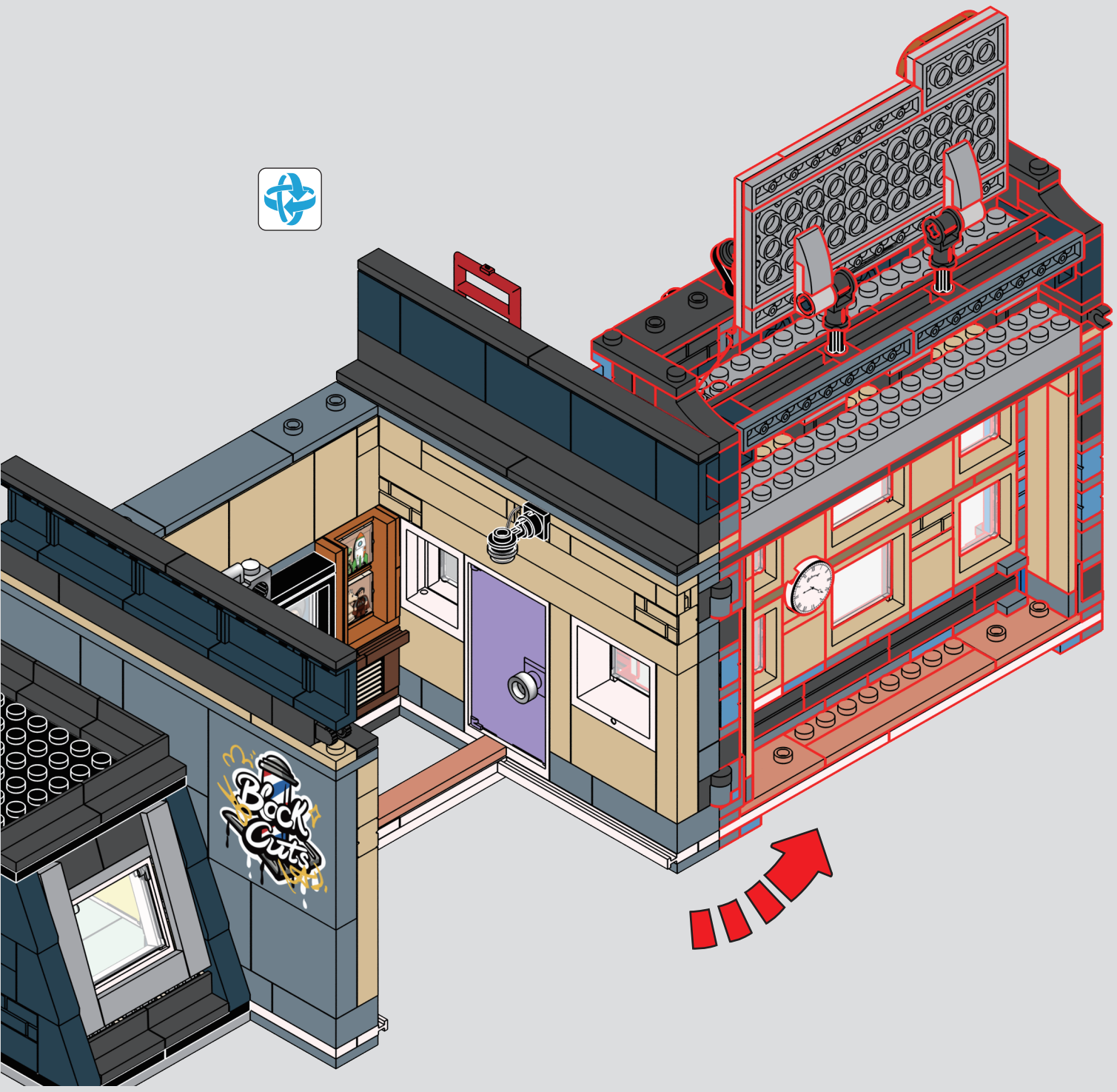

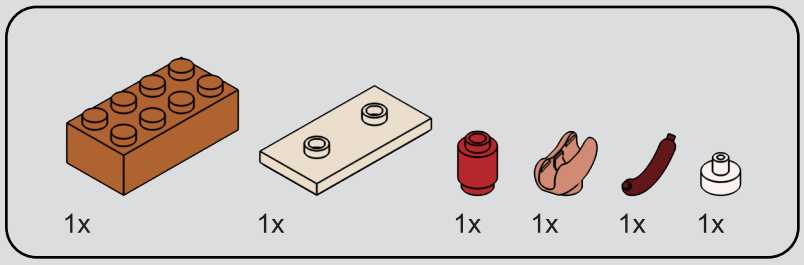

236

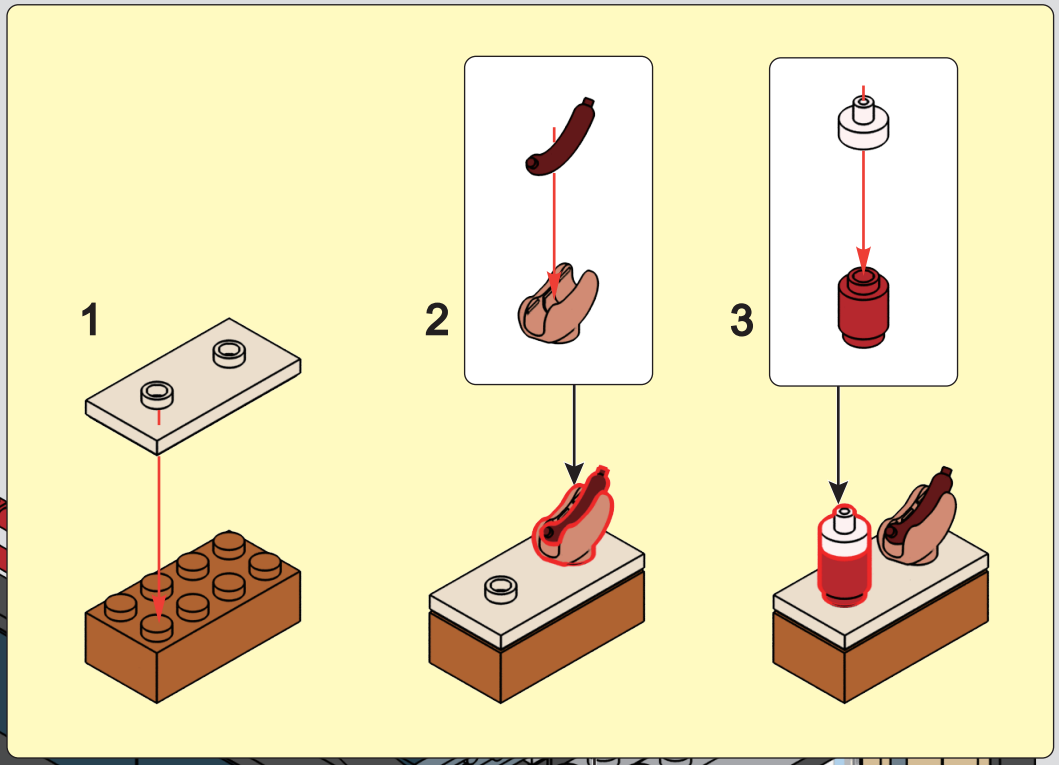



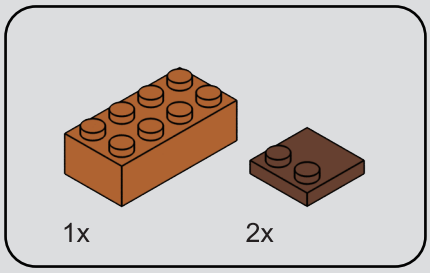

237

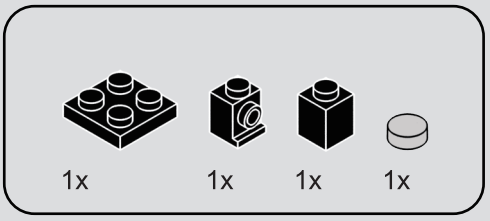

238

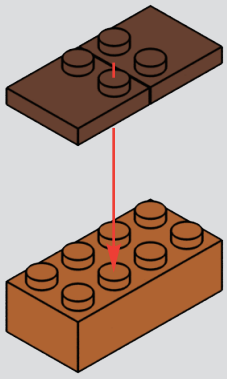

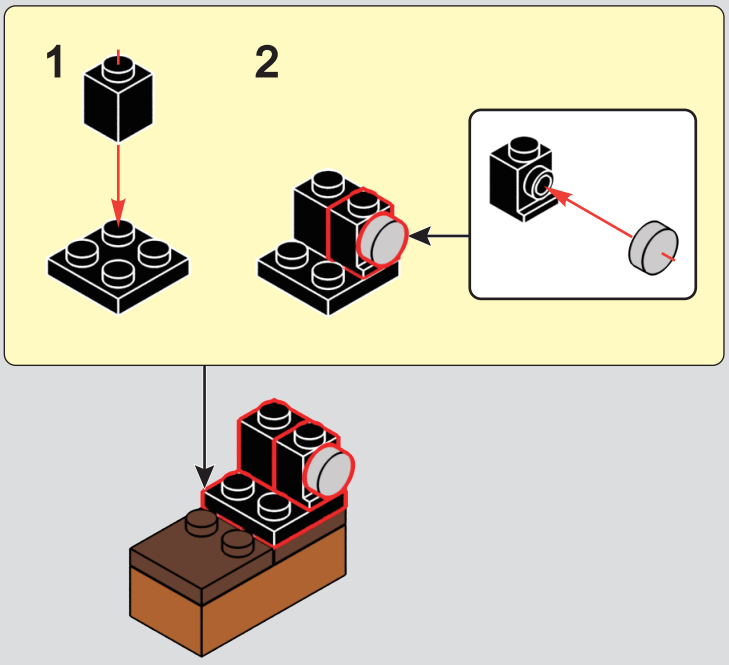

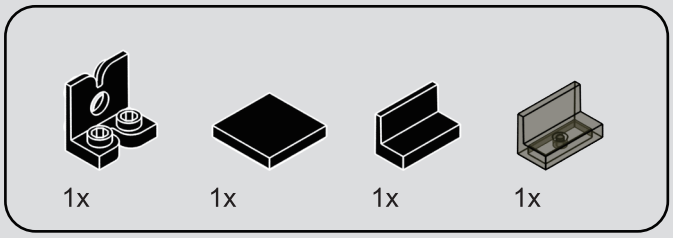

239

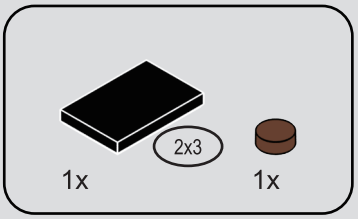

240

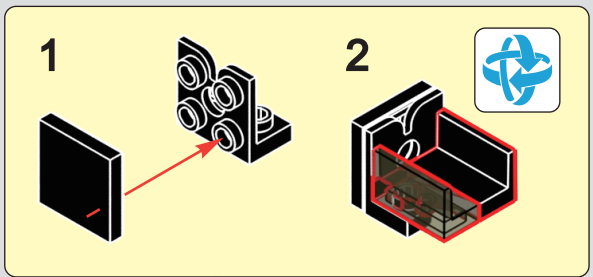

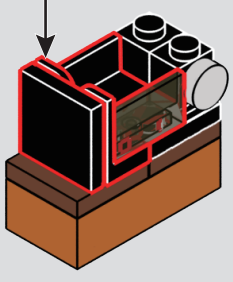

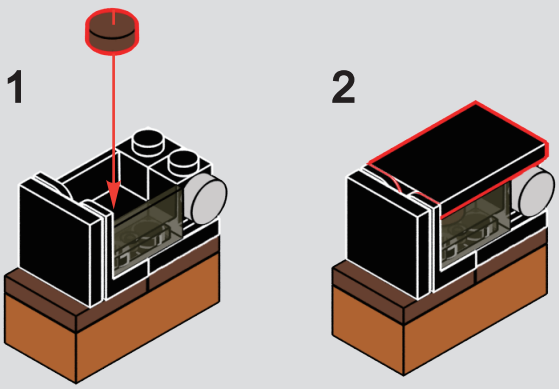

241

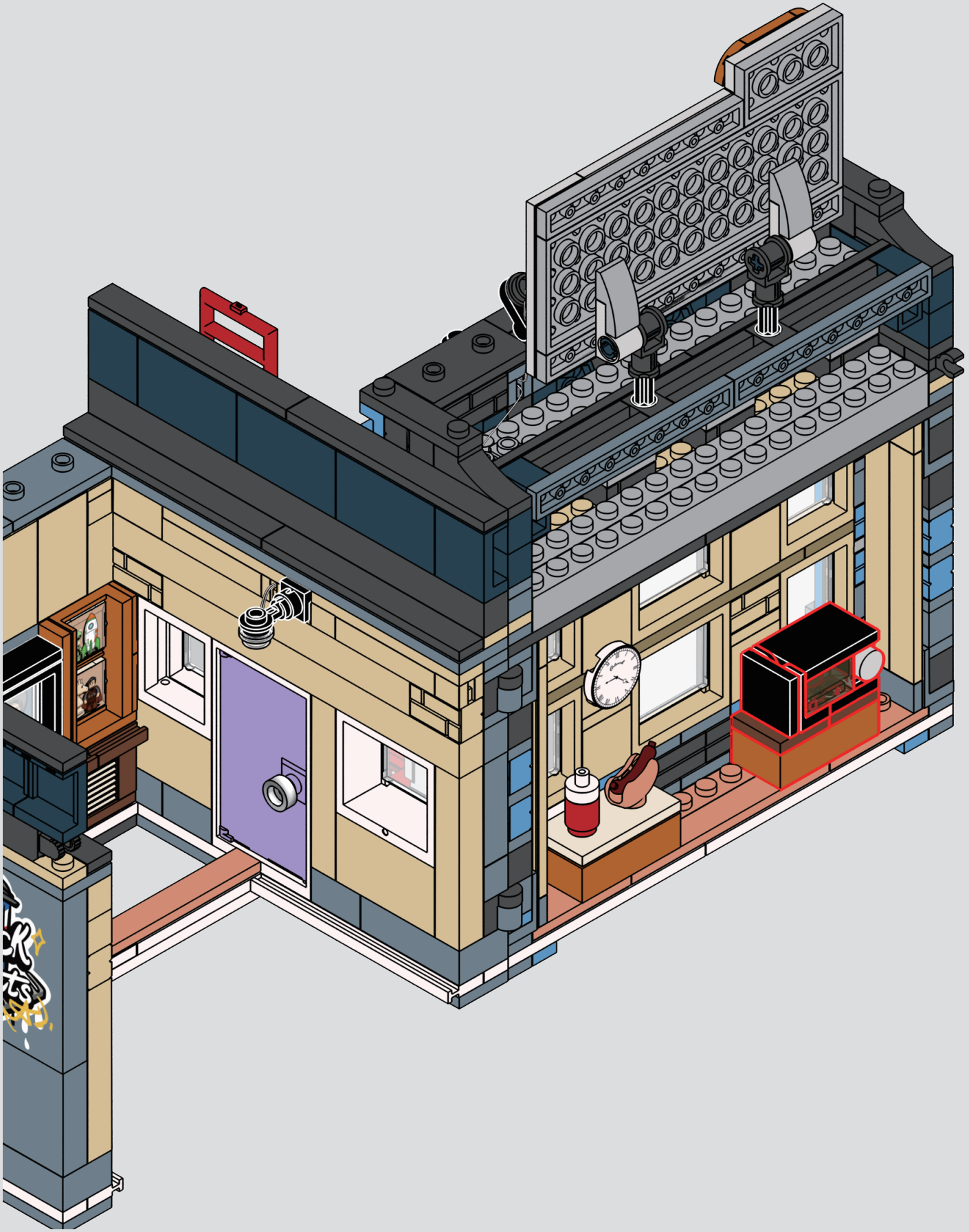

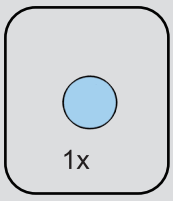

242

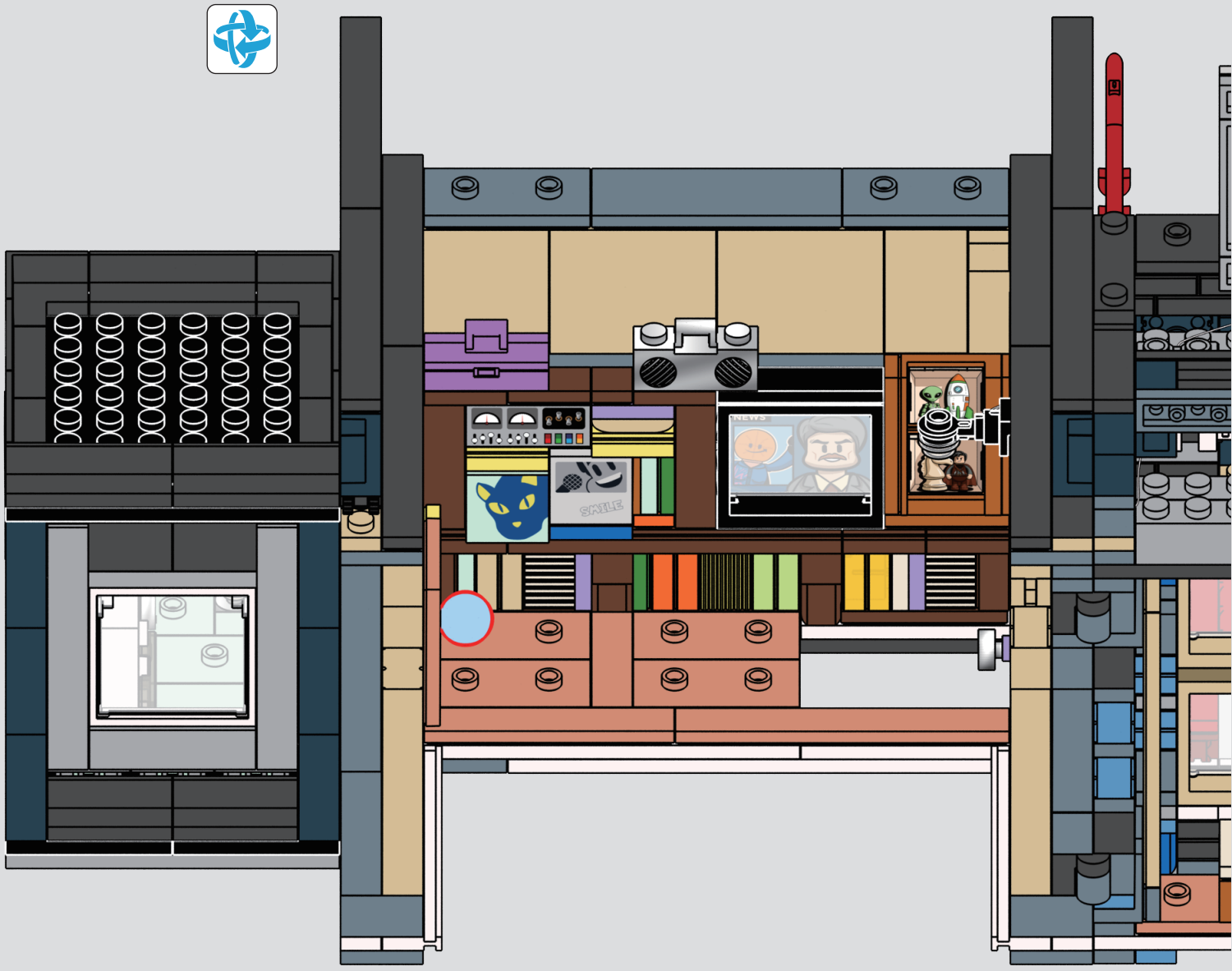

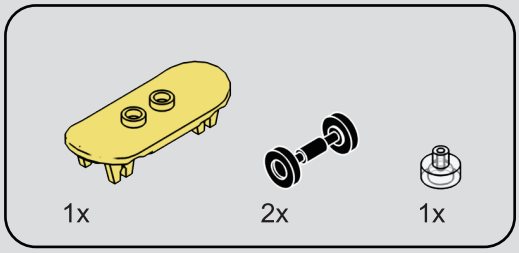

243

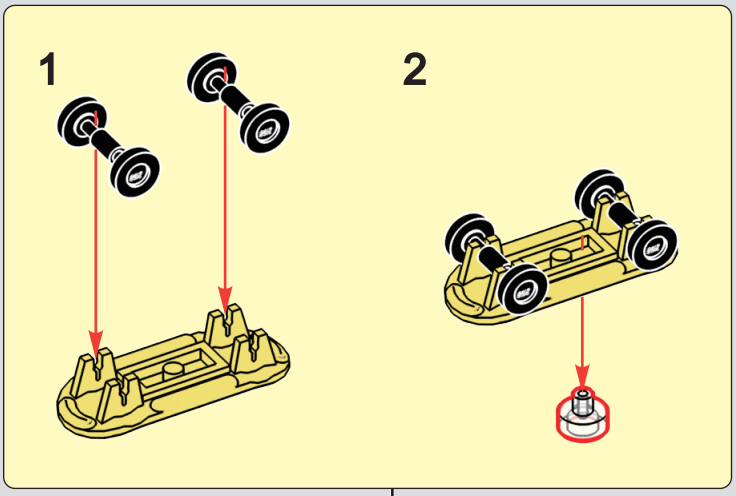

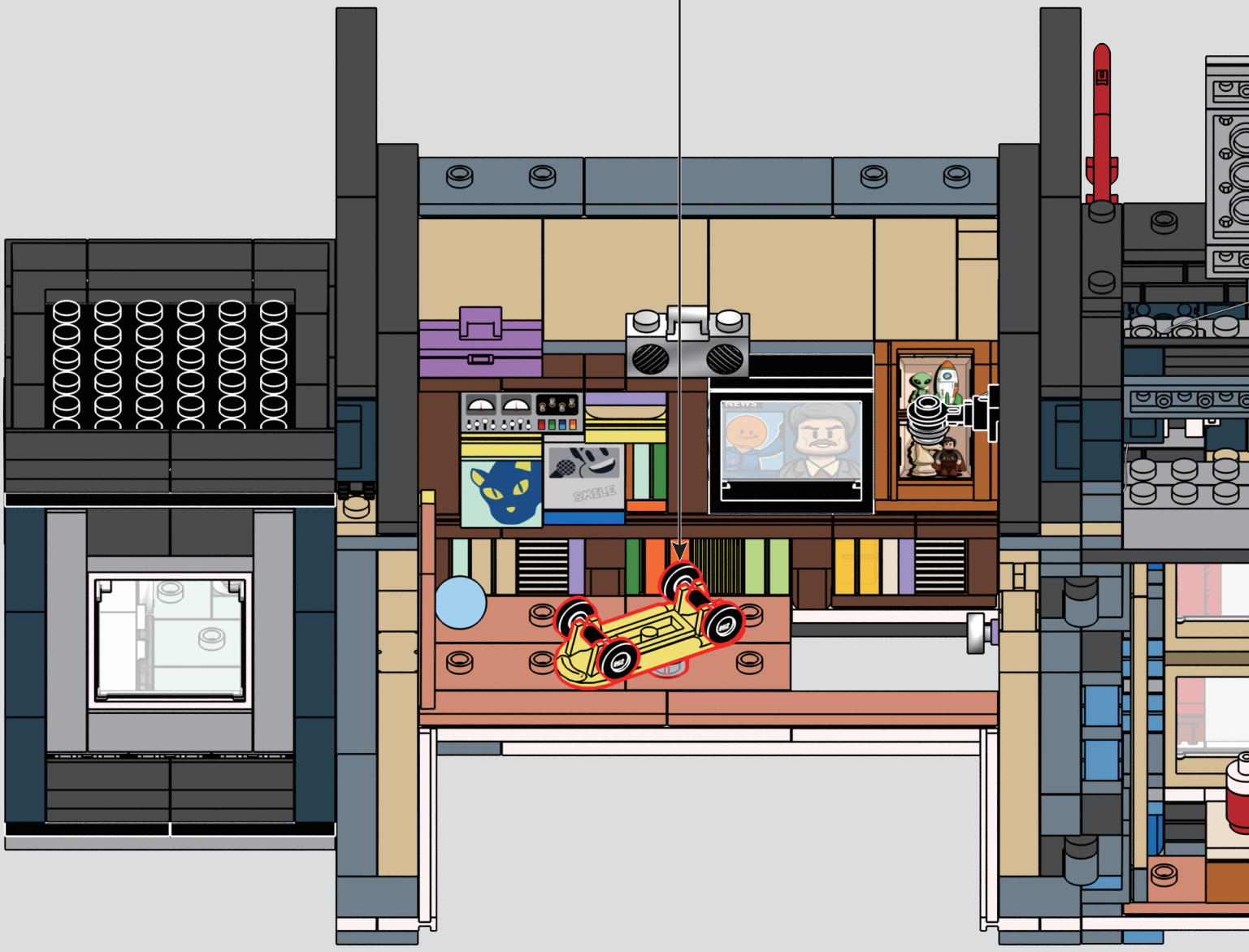

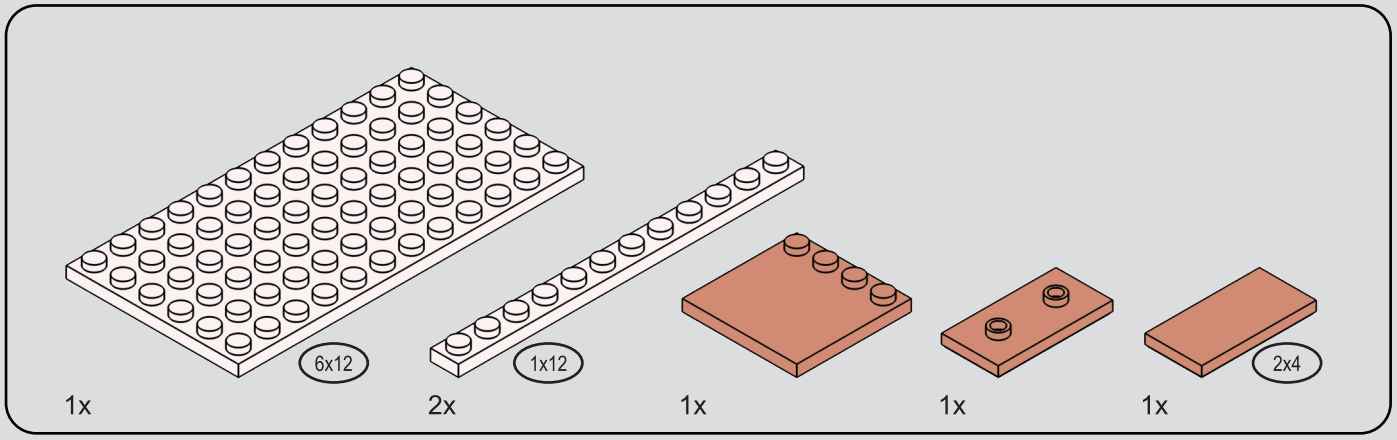

244

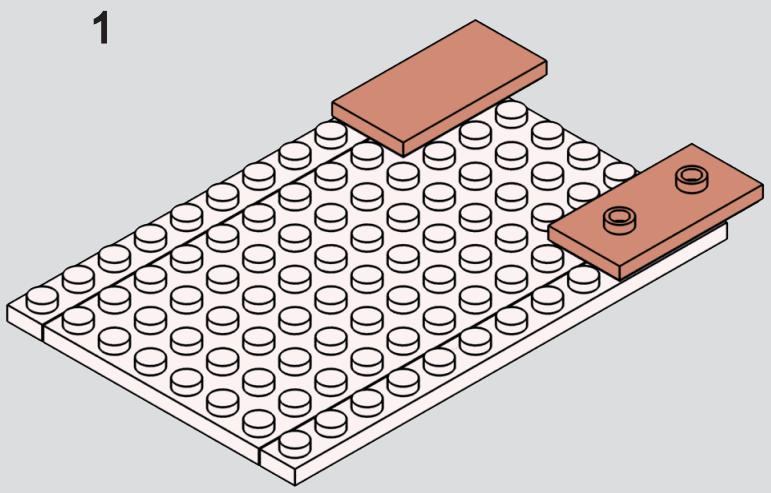

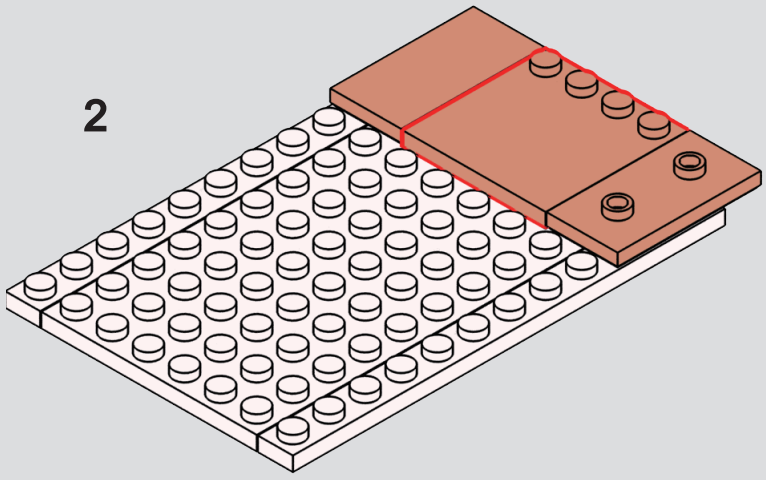

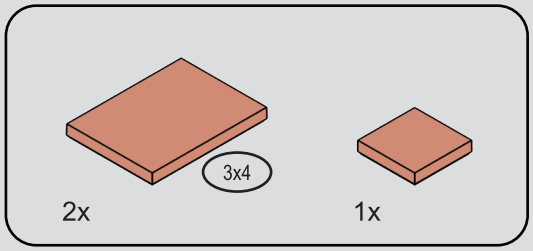

245

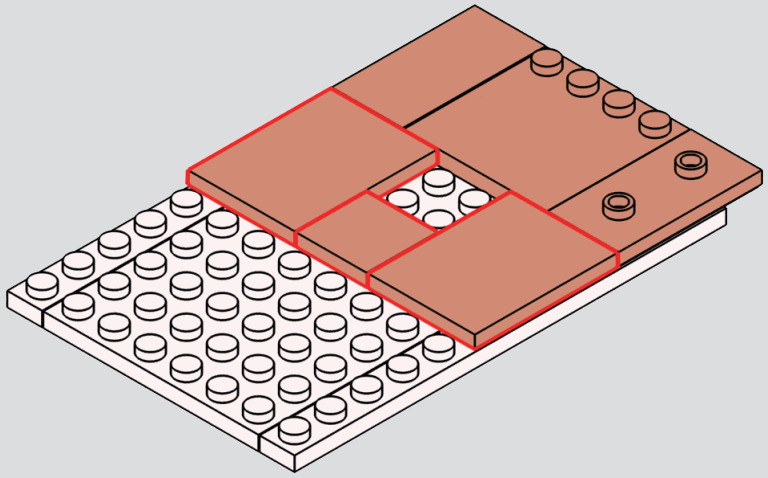

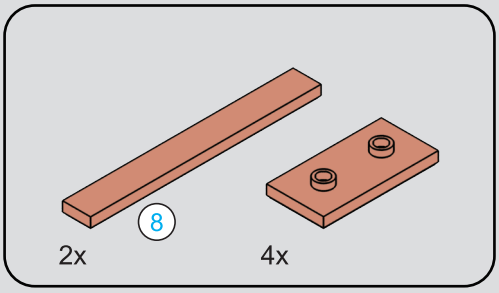



246

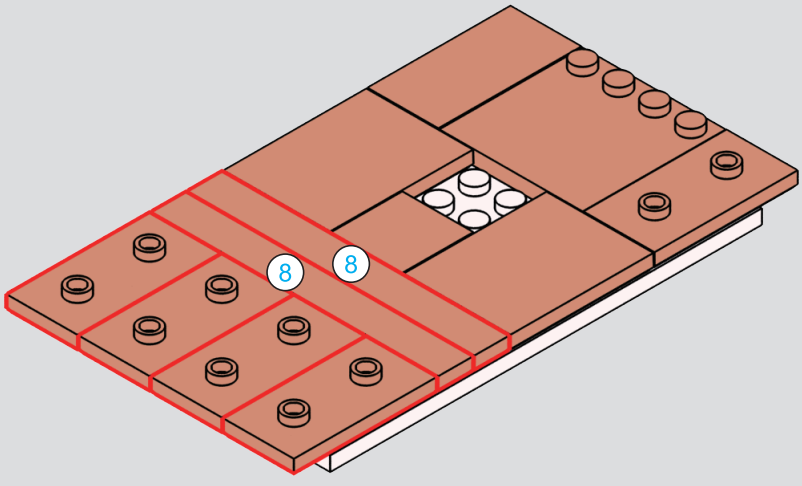

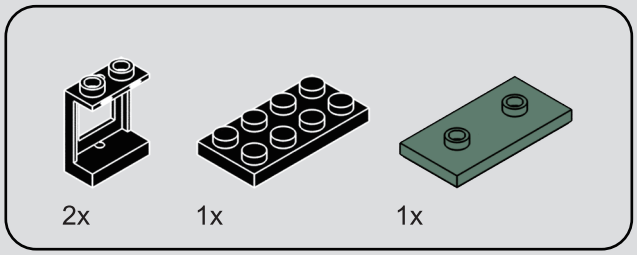

247

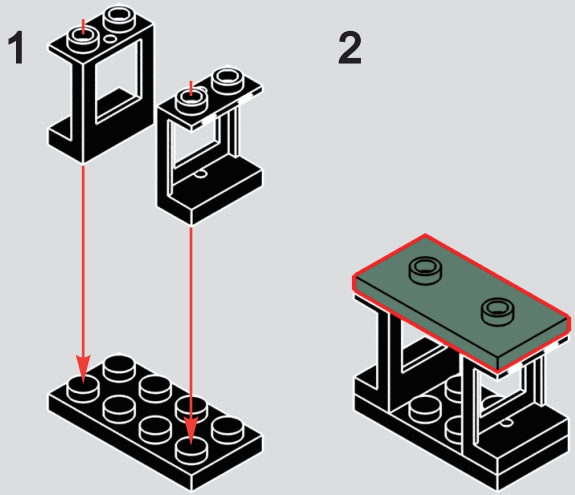

248

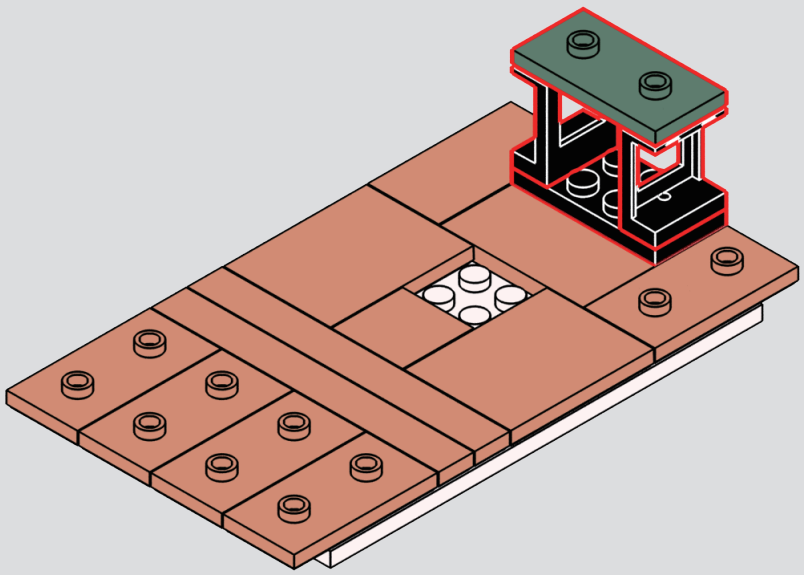

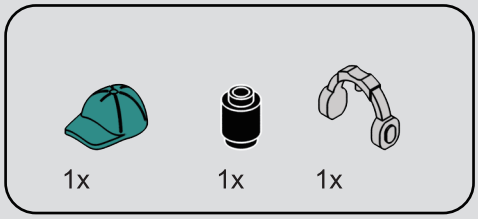

249

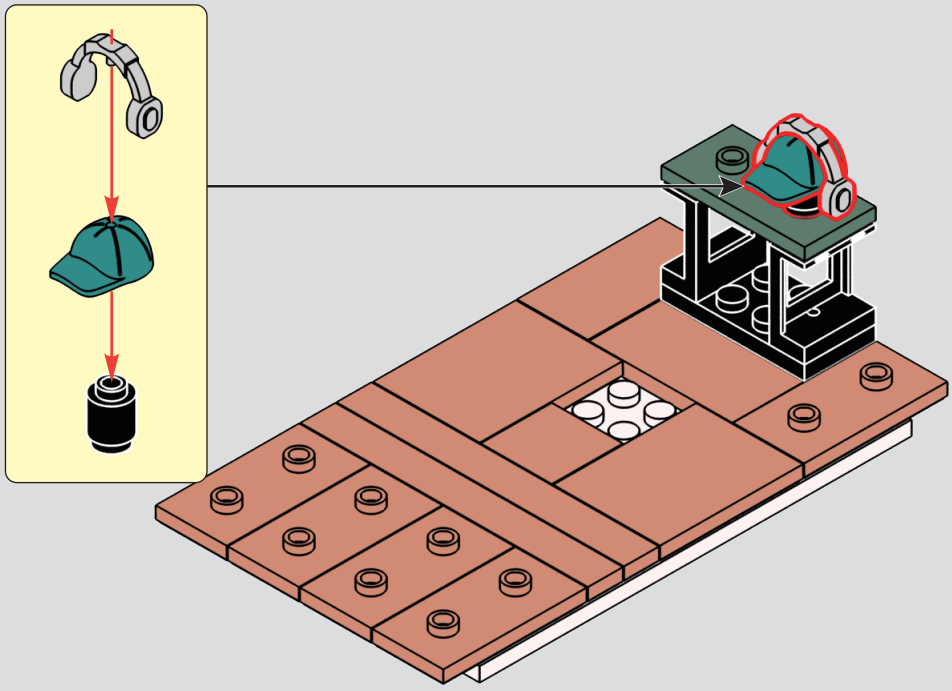

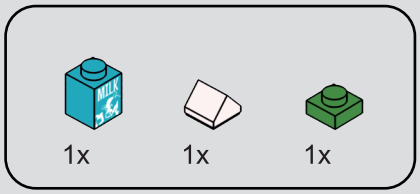

250

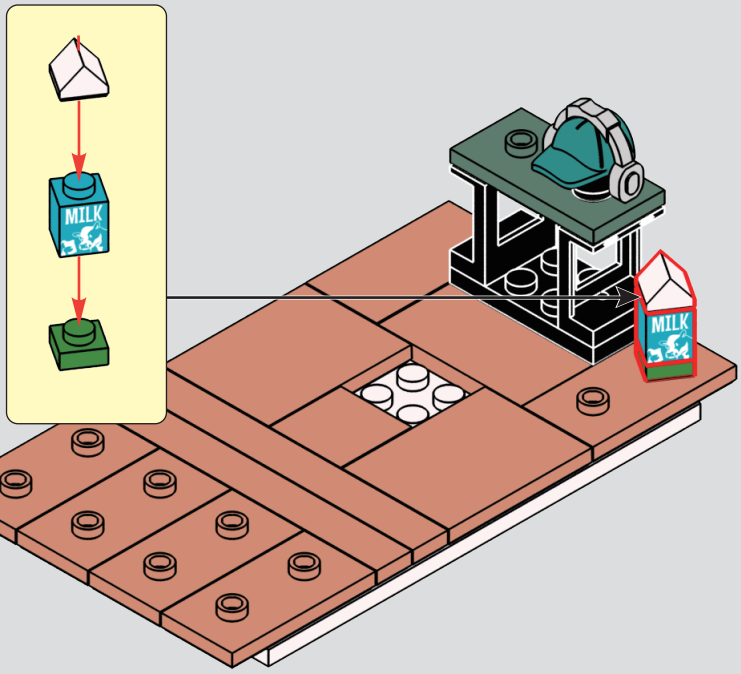

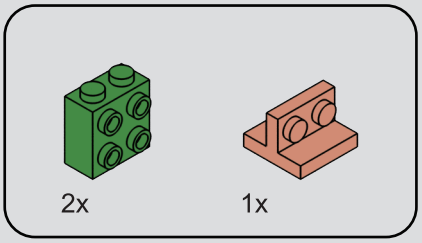

251

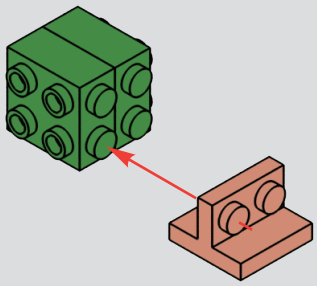

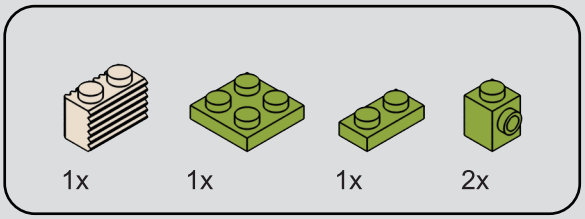

252

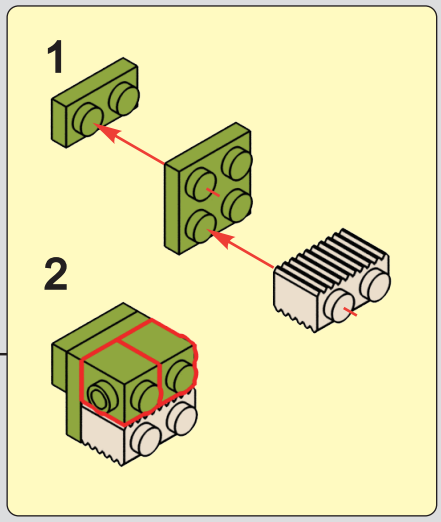

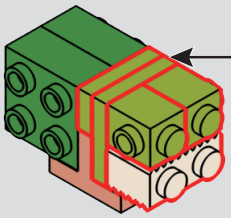

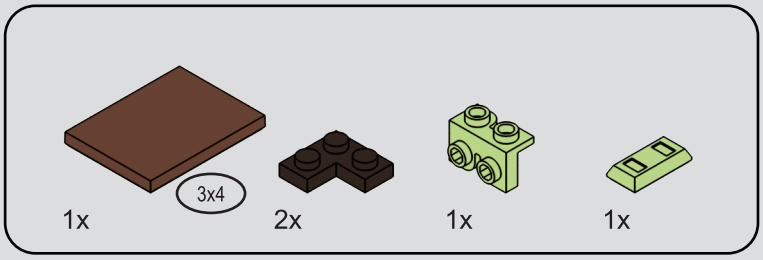

253

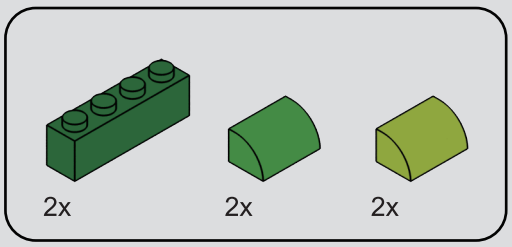

254

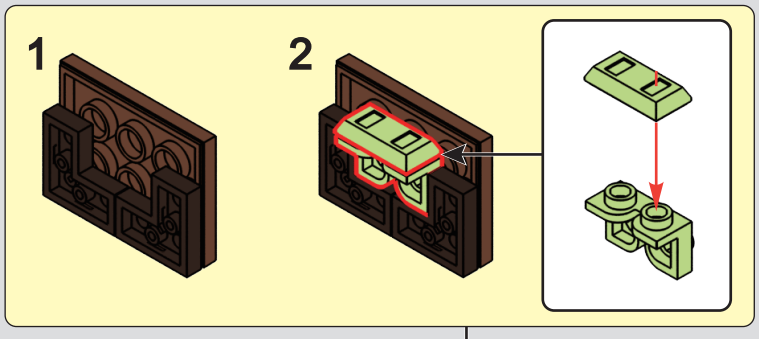

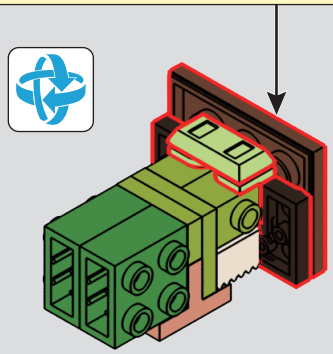

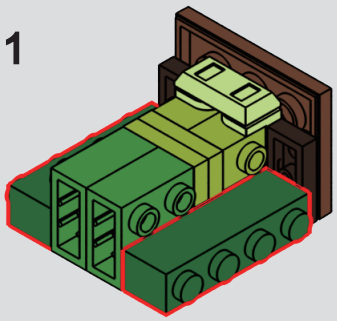

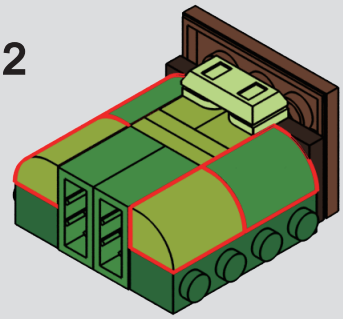

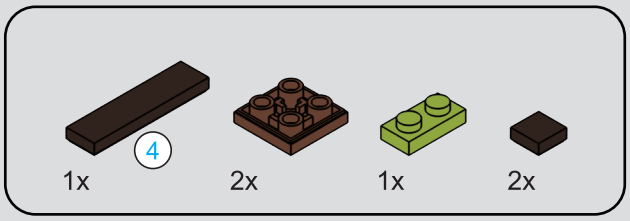



255

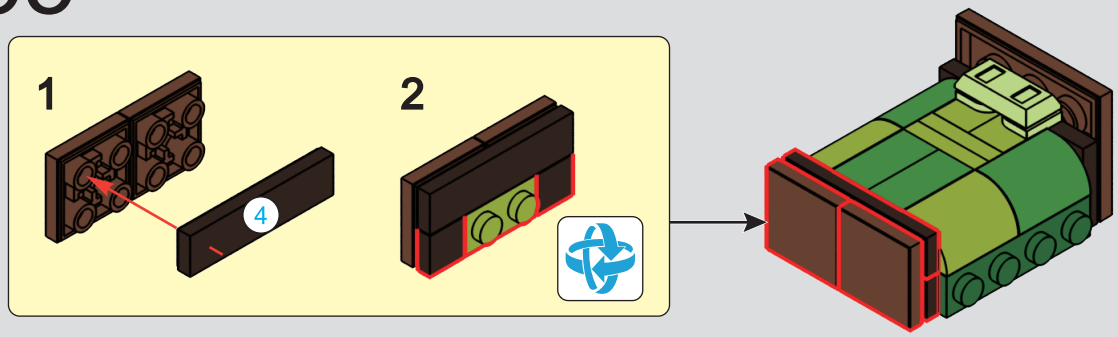

256

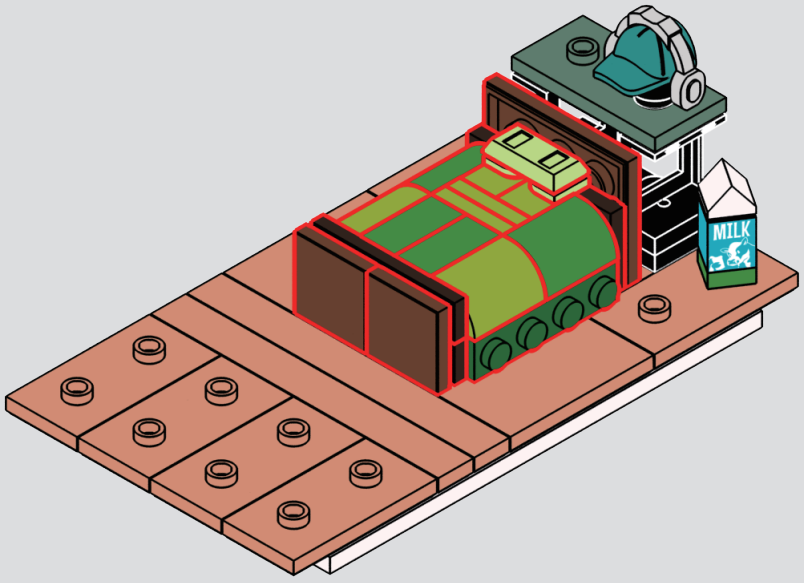

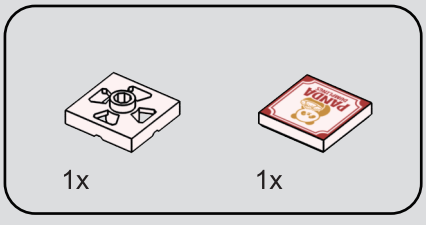

257

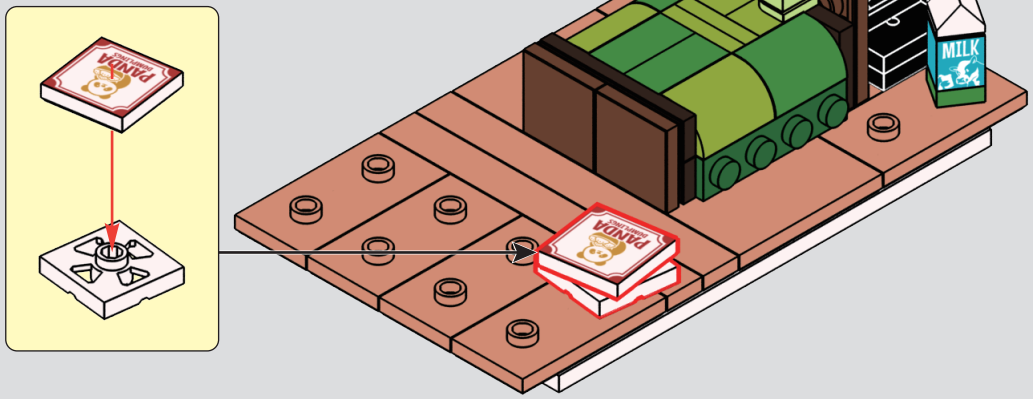

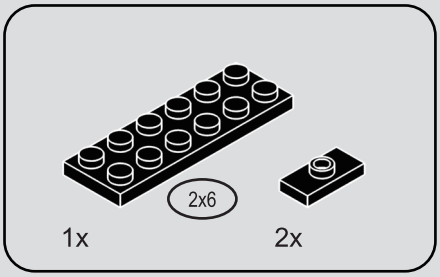

258

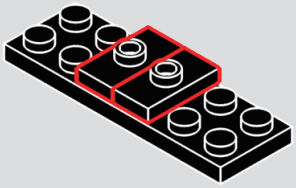

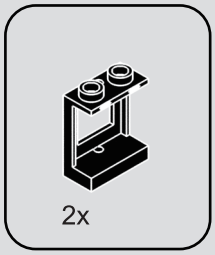

259

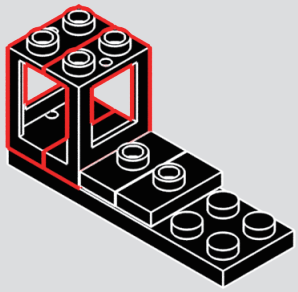

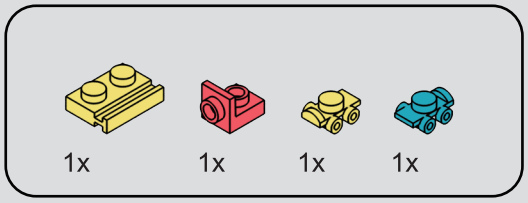

260

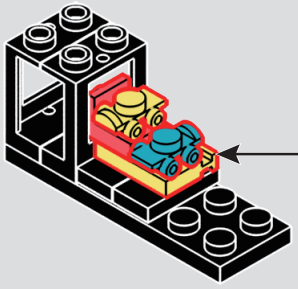

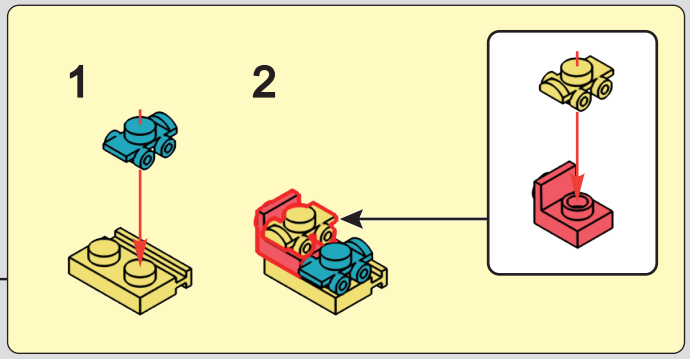

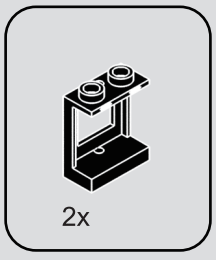

261

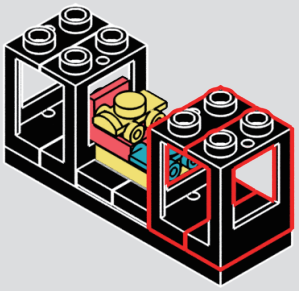

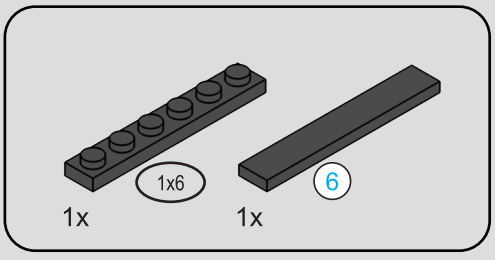

262

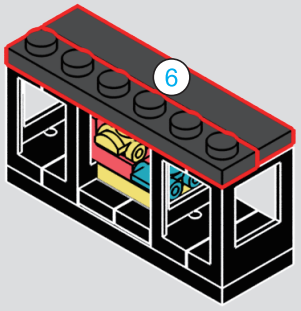



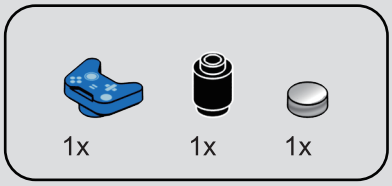

263

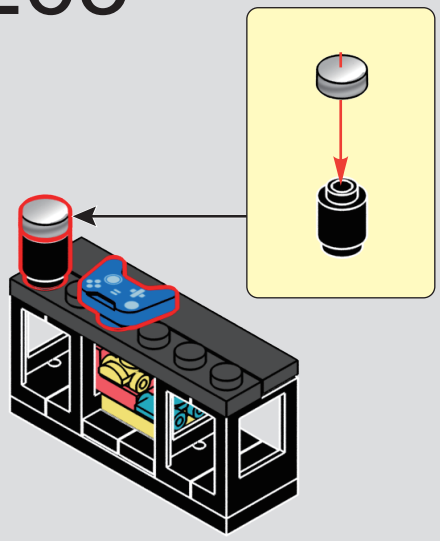

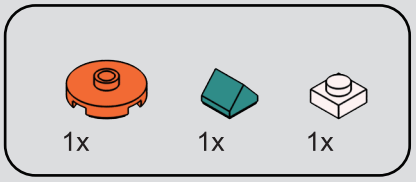

264

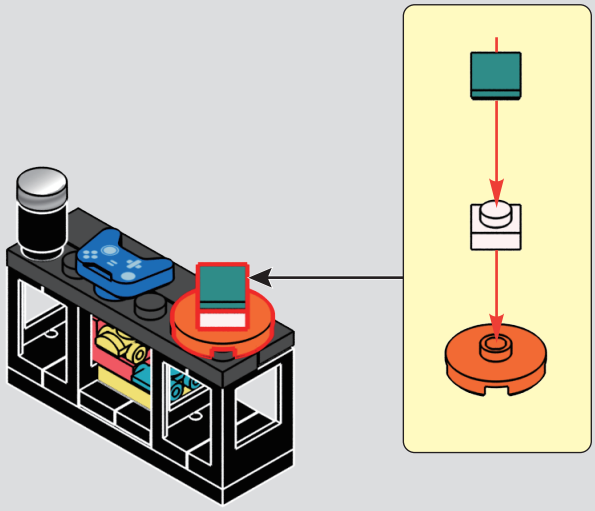

265

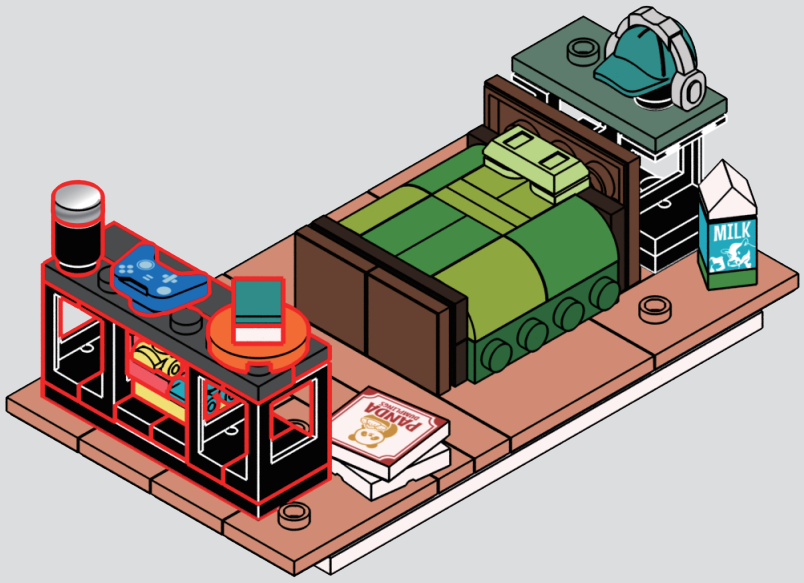

266

1



2



267

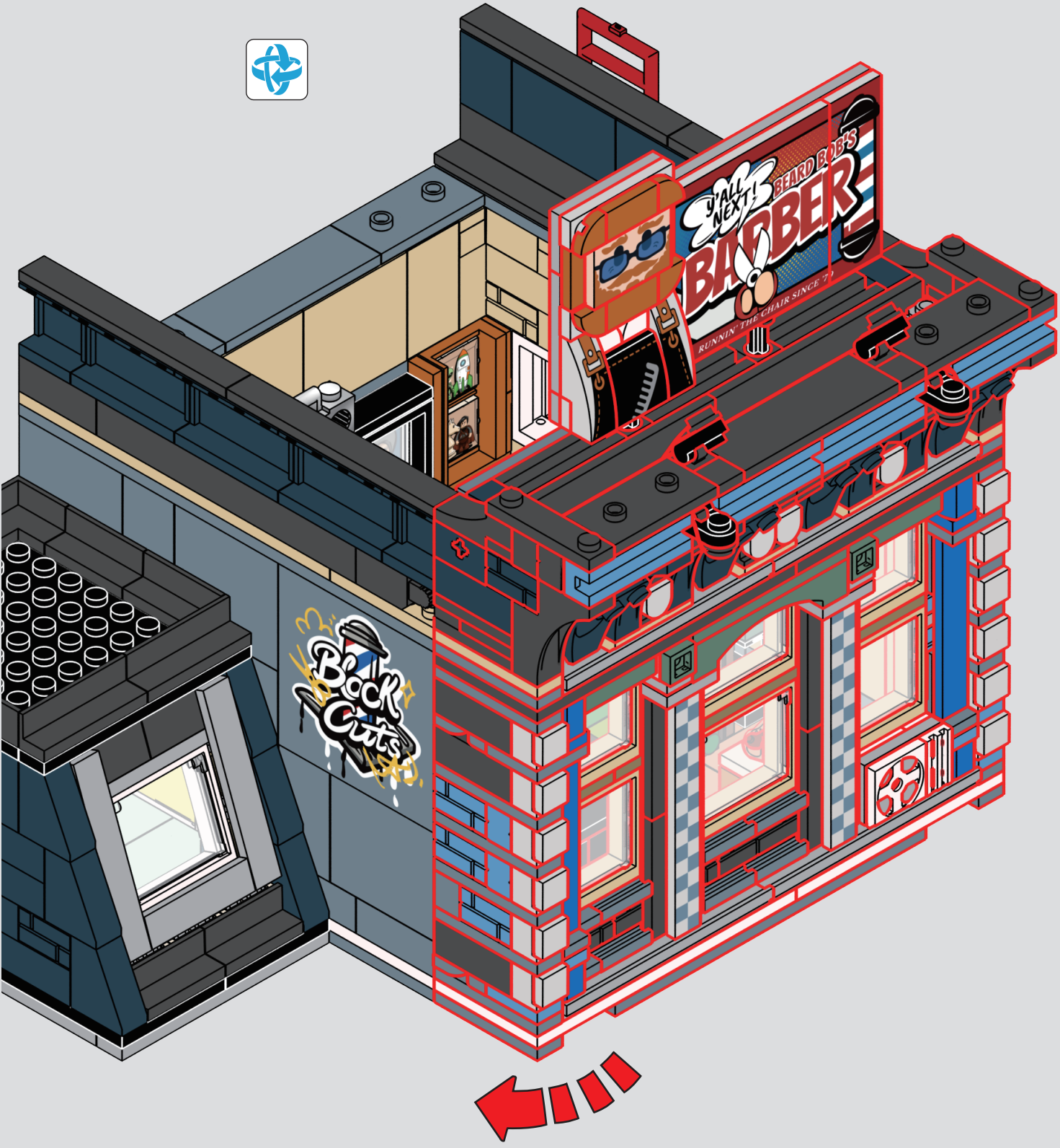
Y'ALL NEXT!
BEARD BOB'S
BARBER
RUNNIN' THE CHAIR SINCE '7
Buzz Cuts

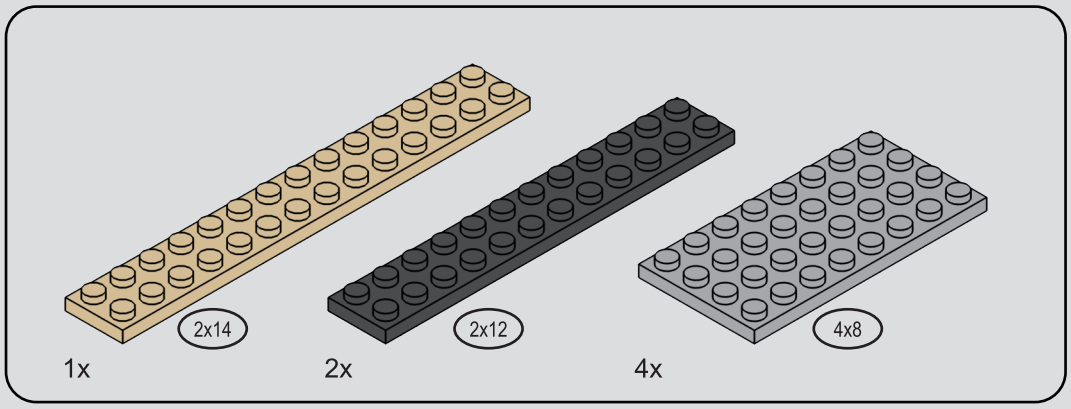

268

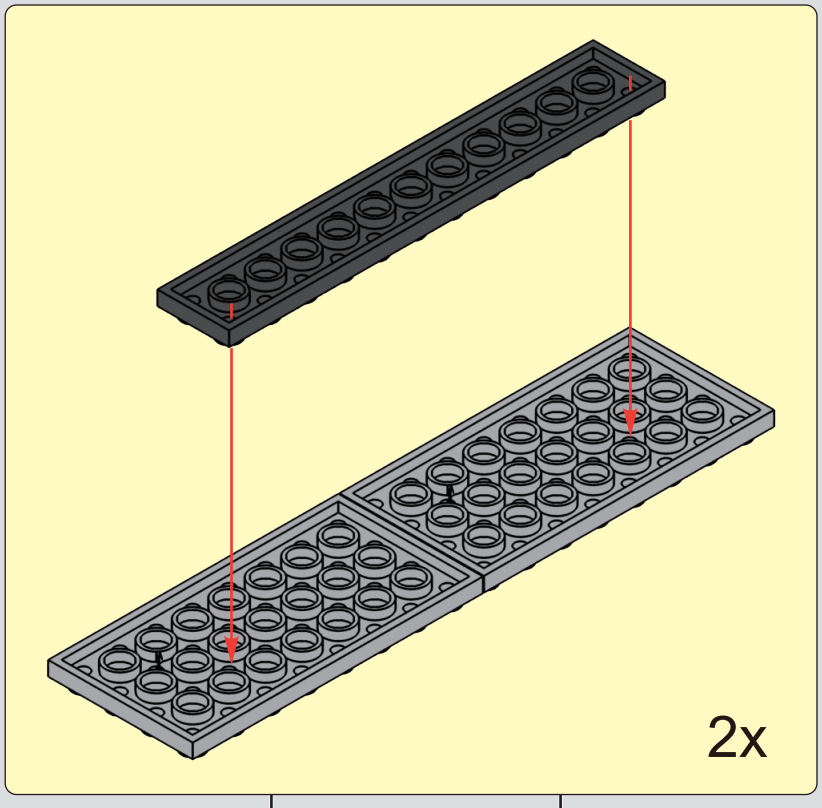

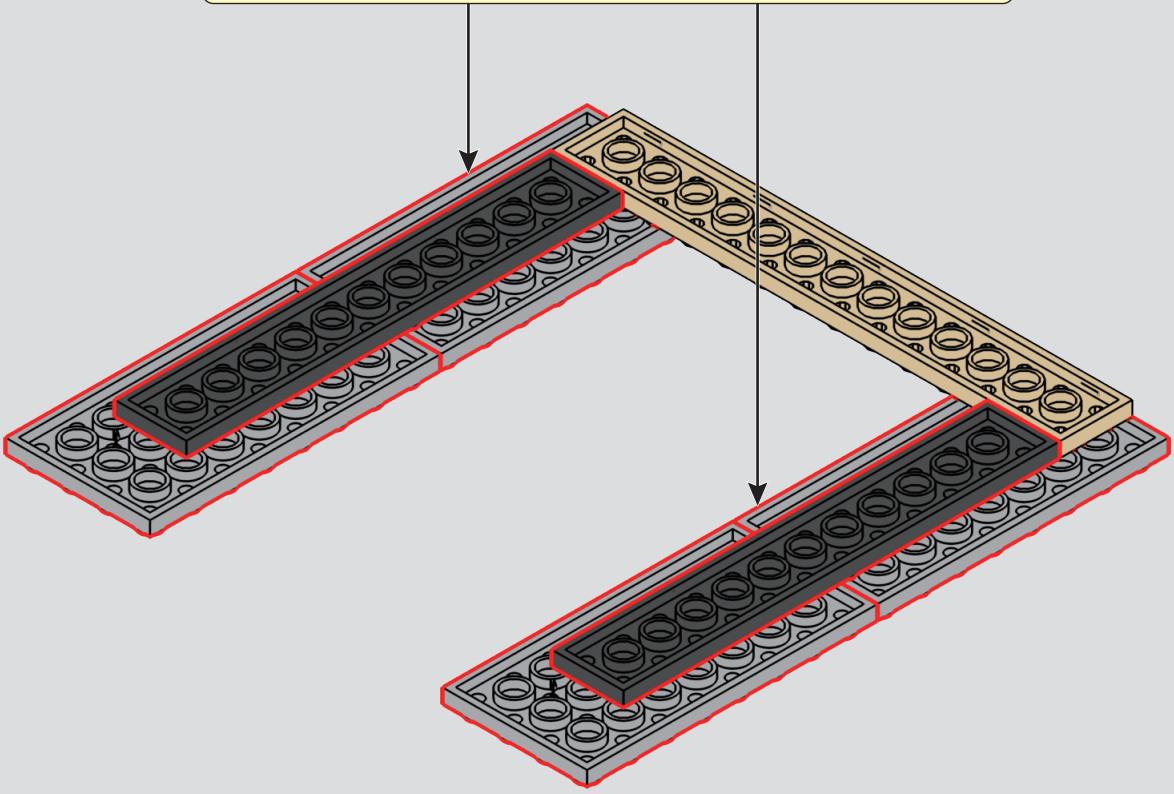

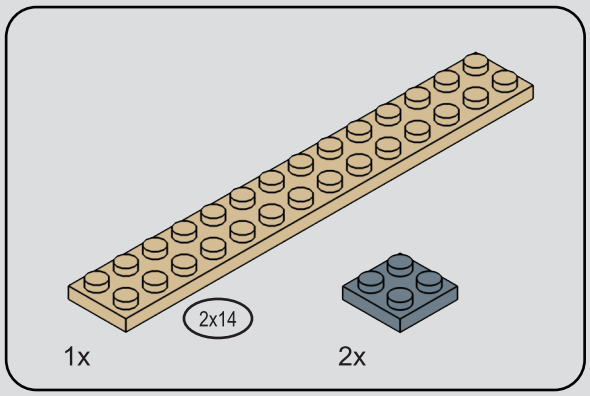

269

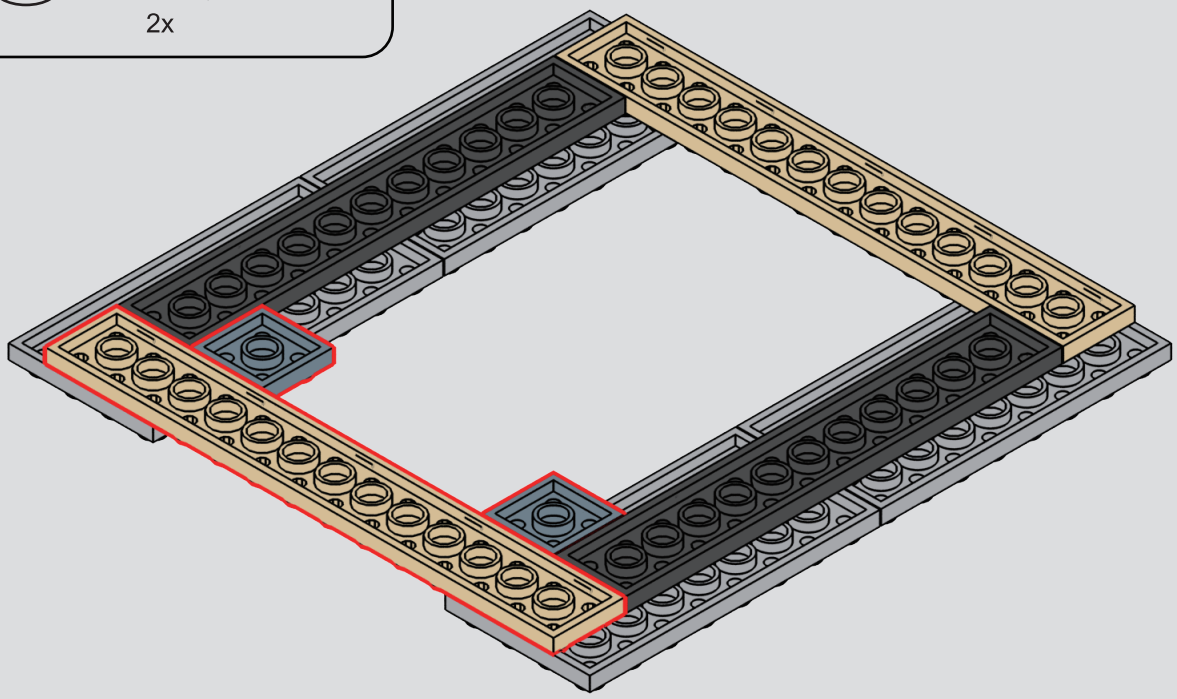

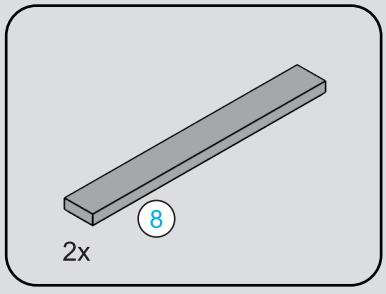



270

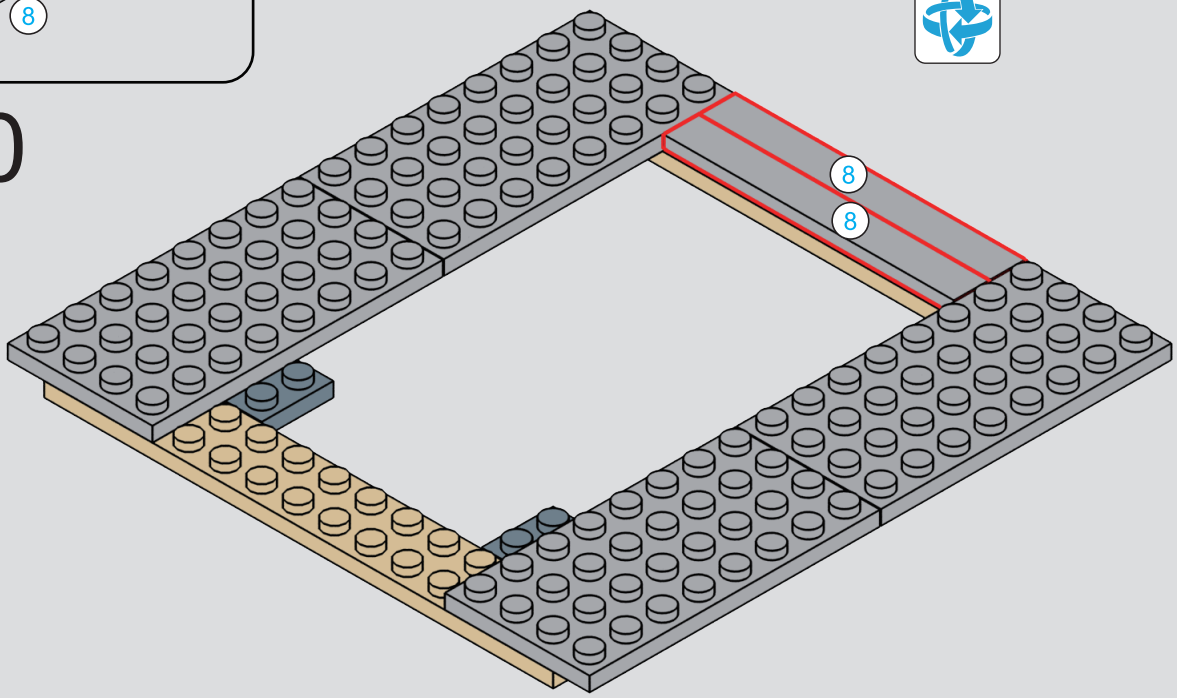

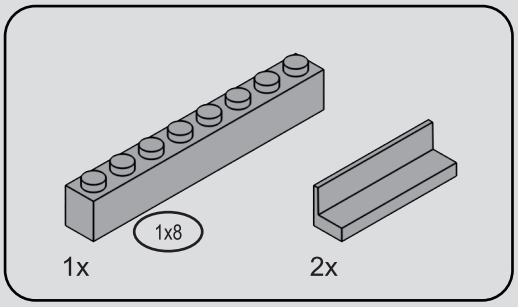

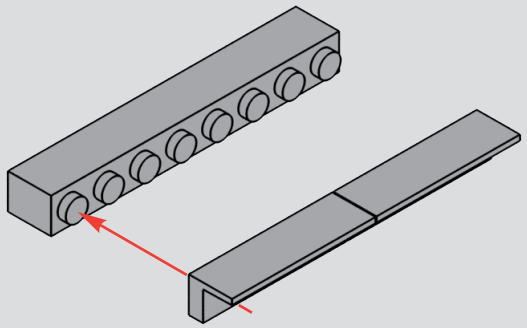

271

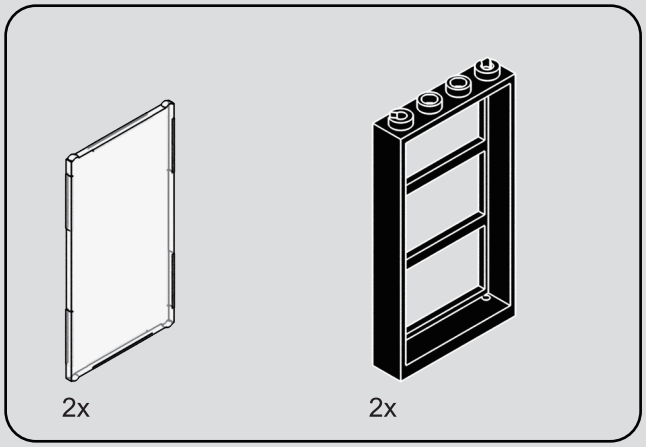

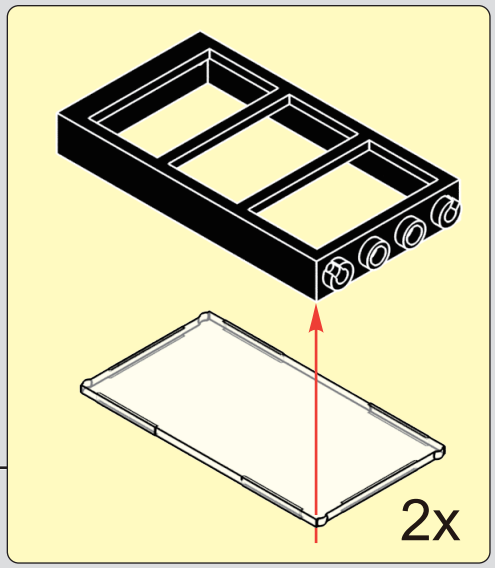

272

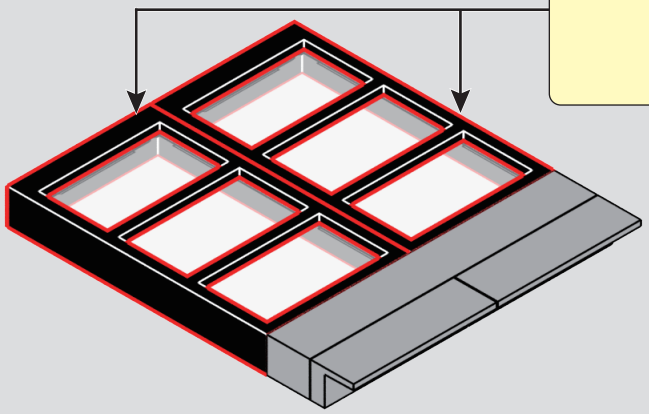

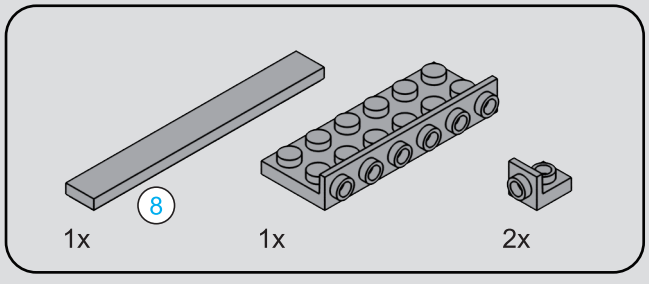

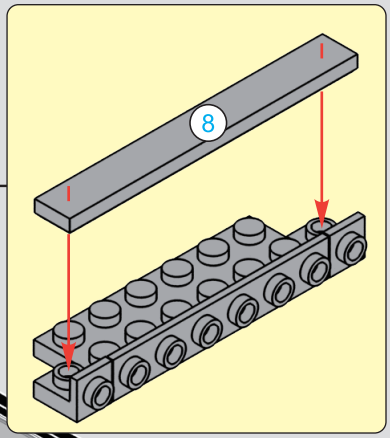

273

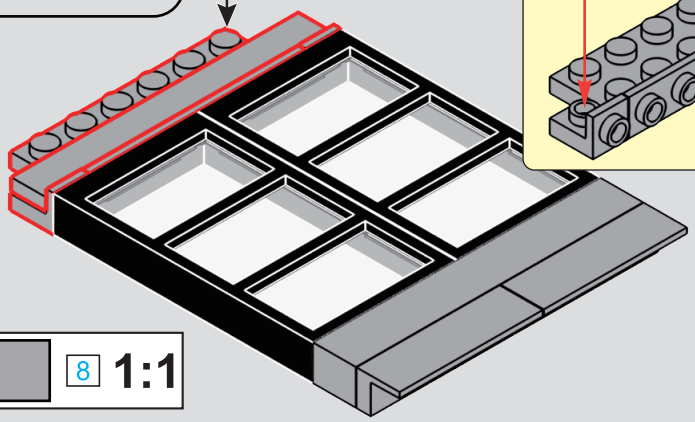



274

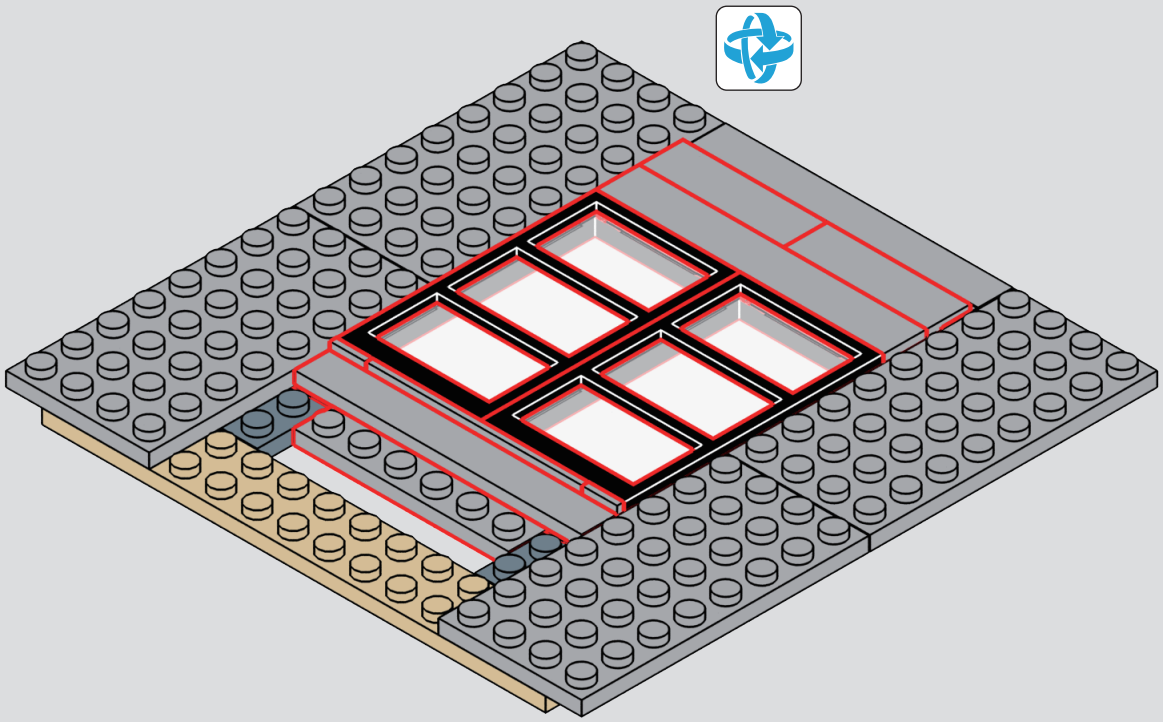

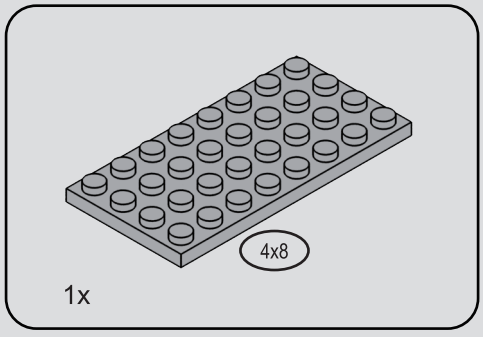

275

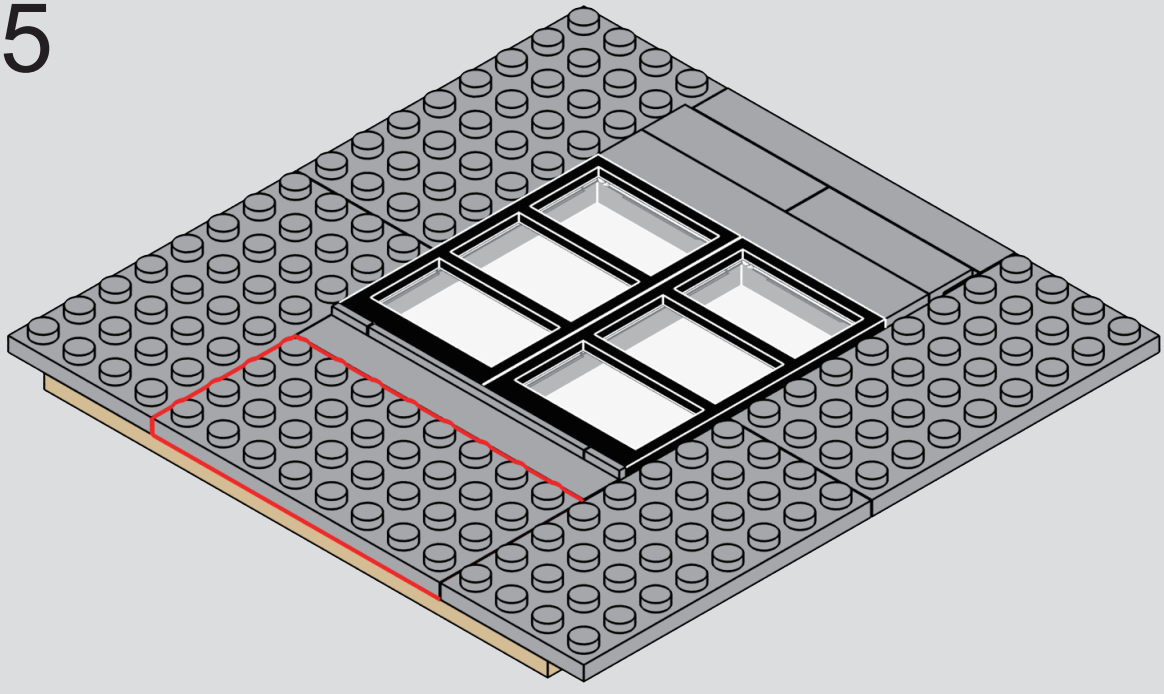

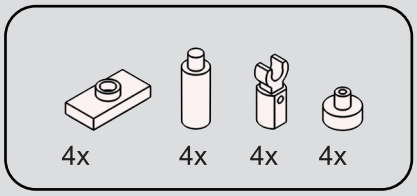

276

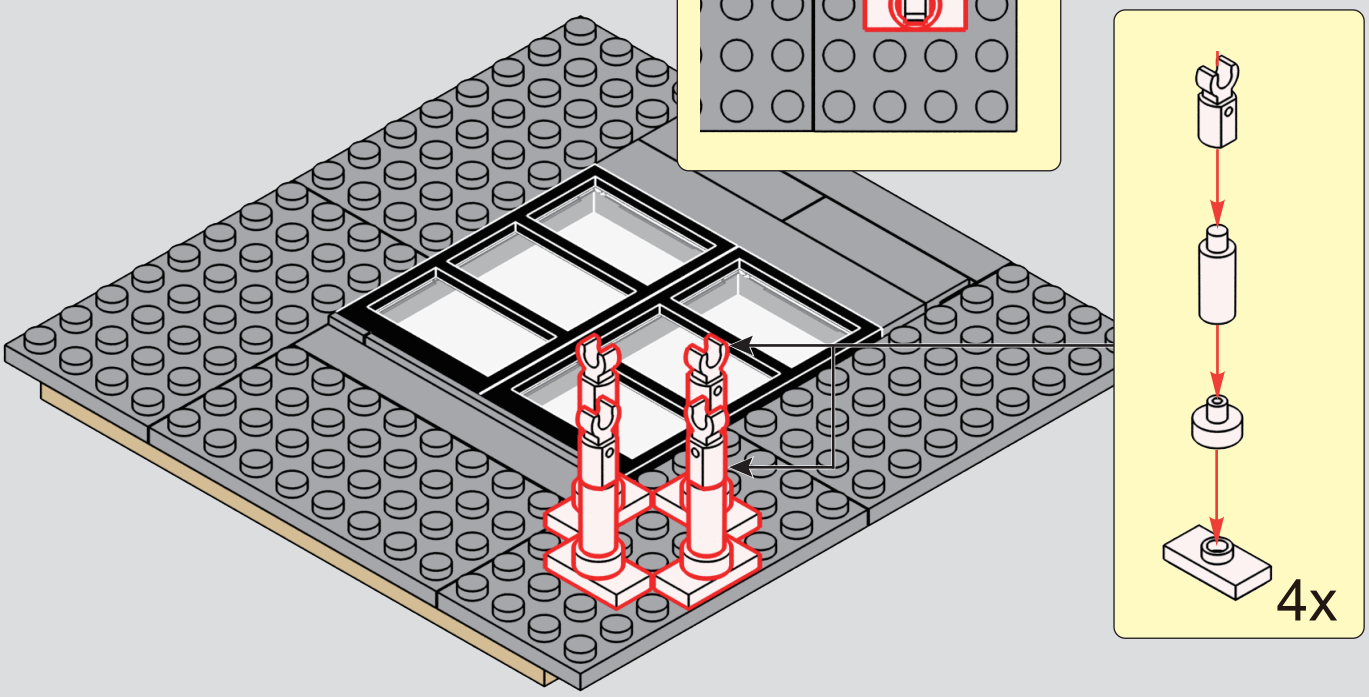

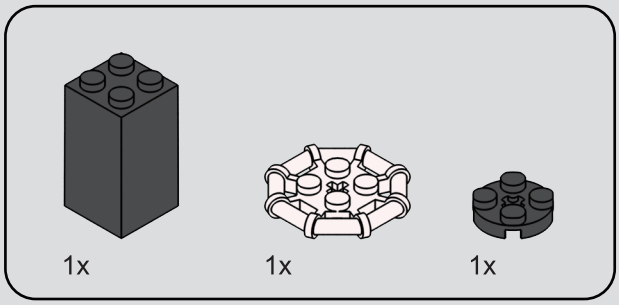

277

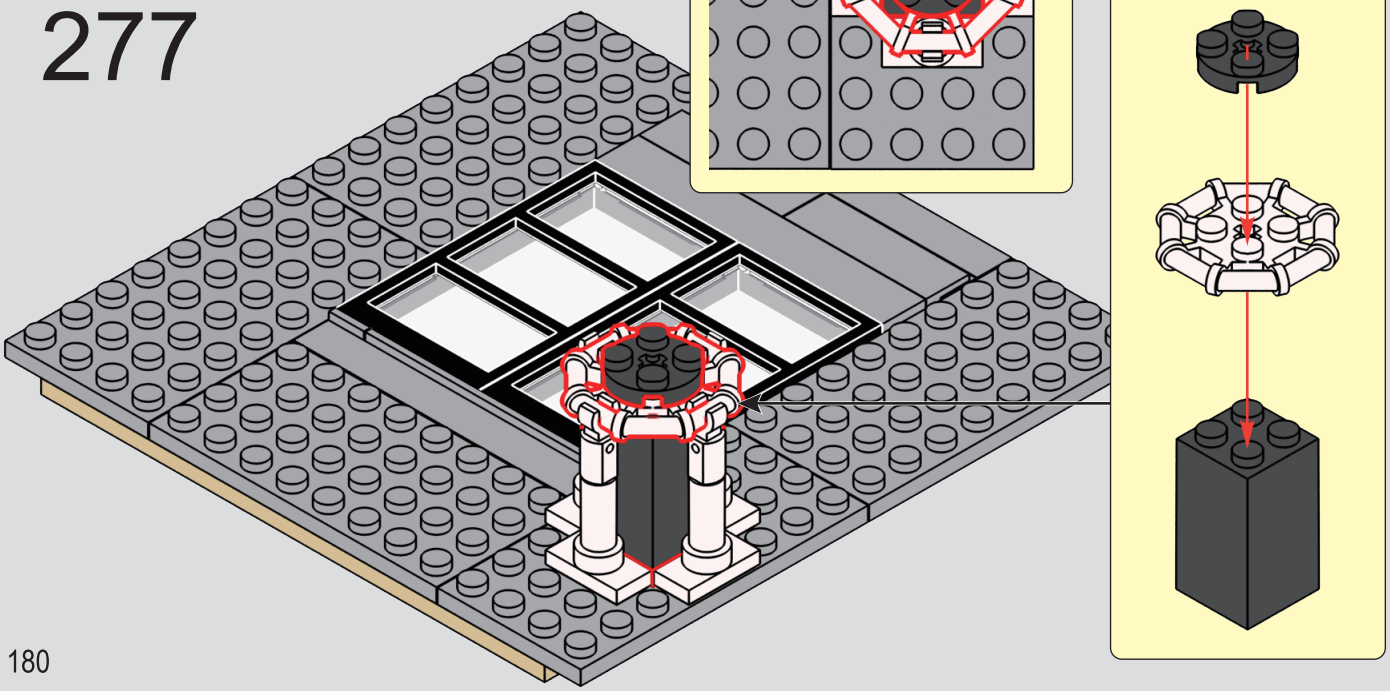

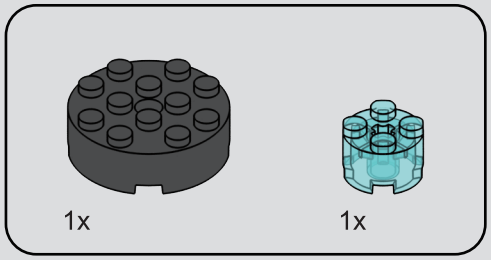

278

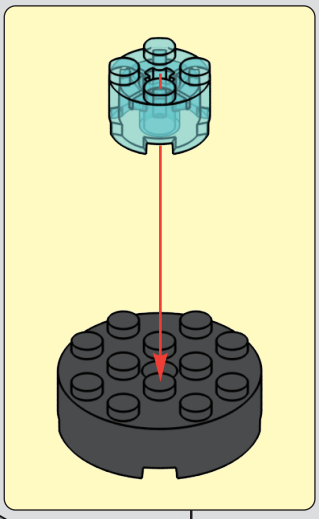

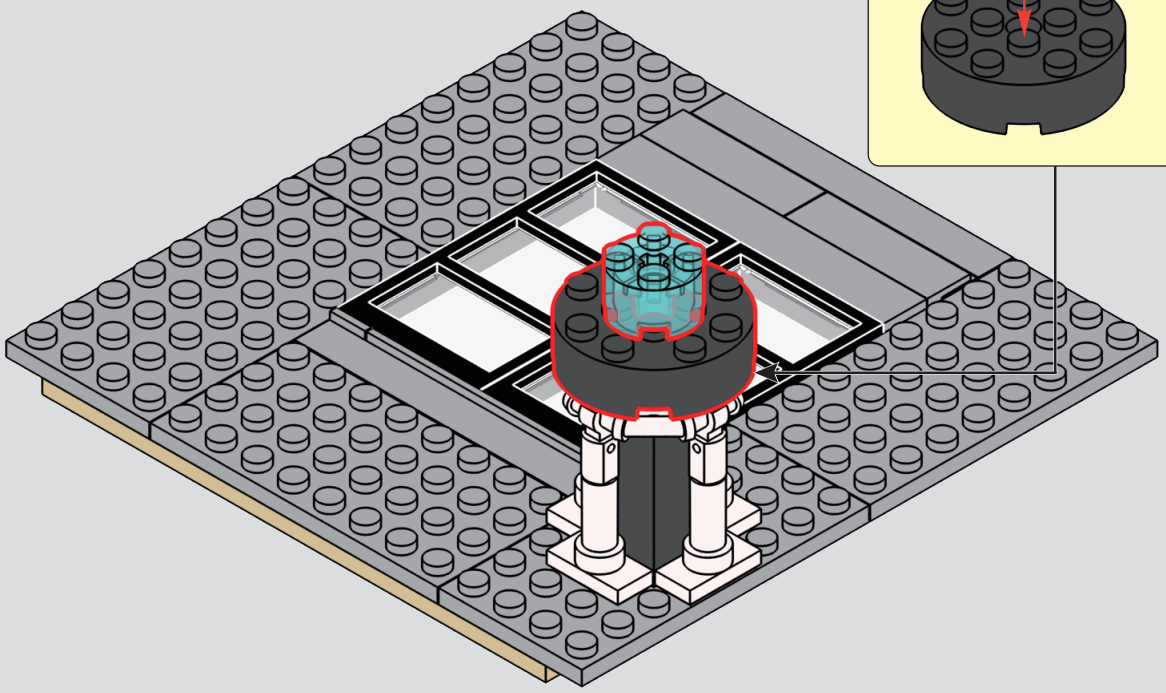

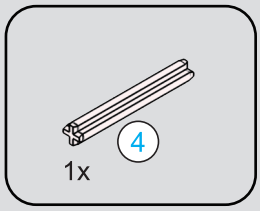



279

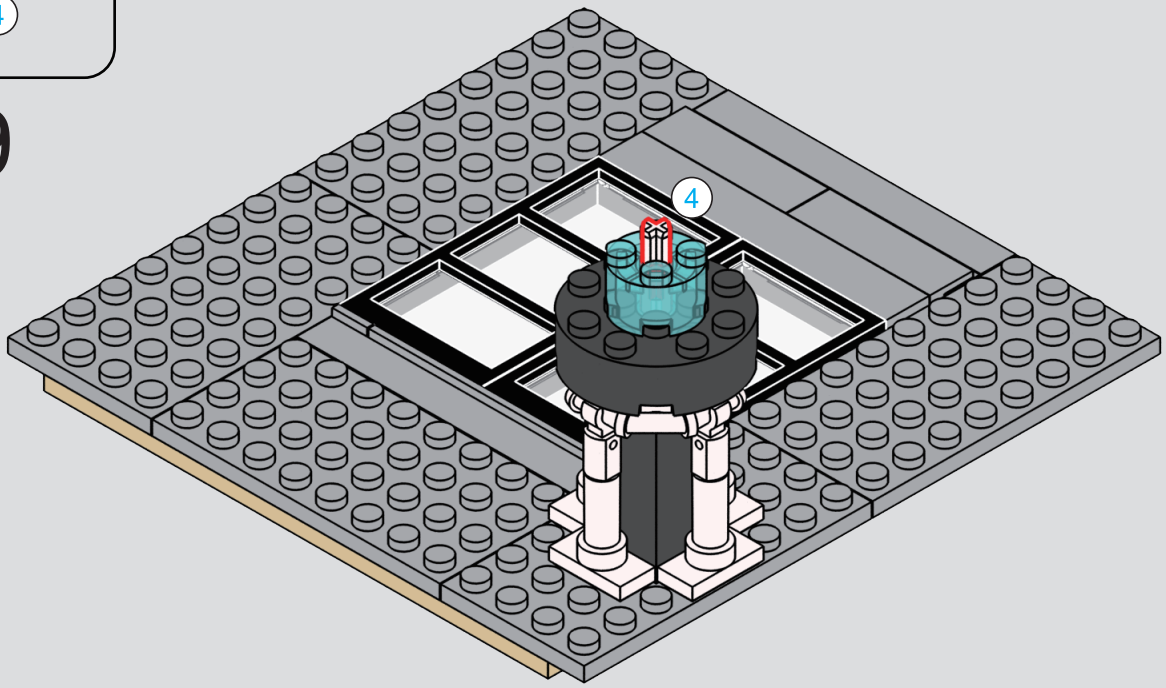

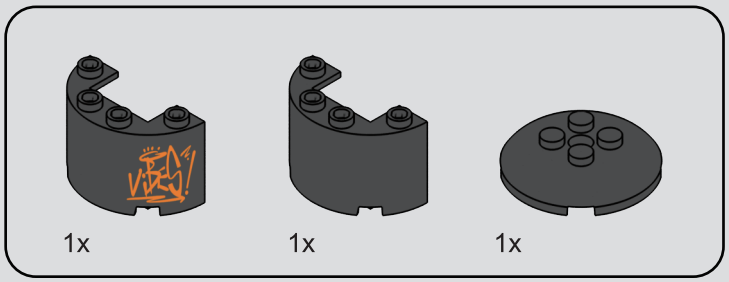

280

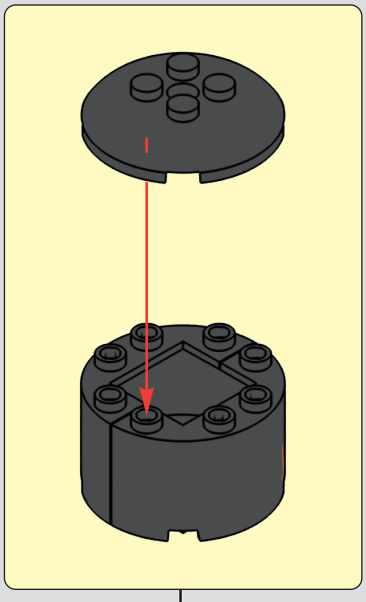

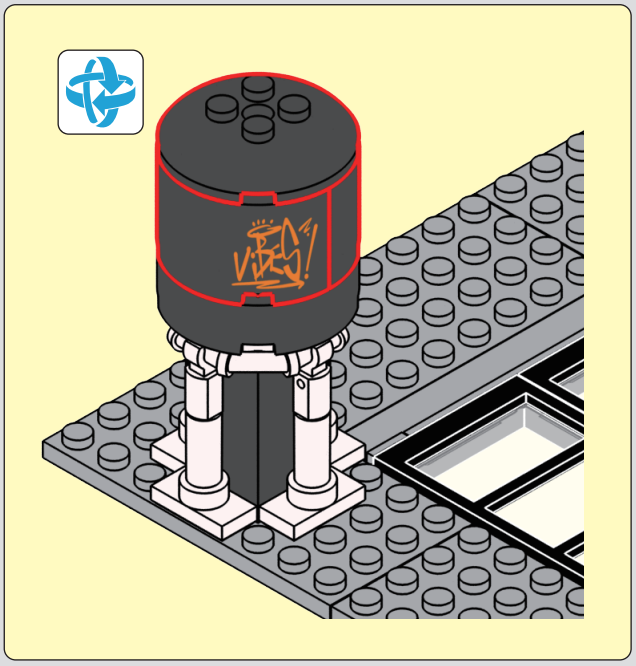

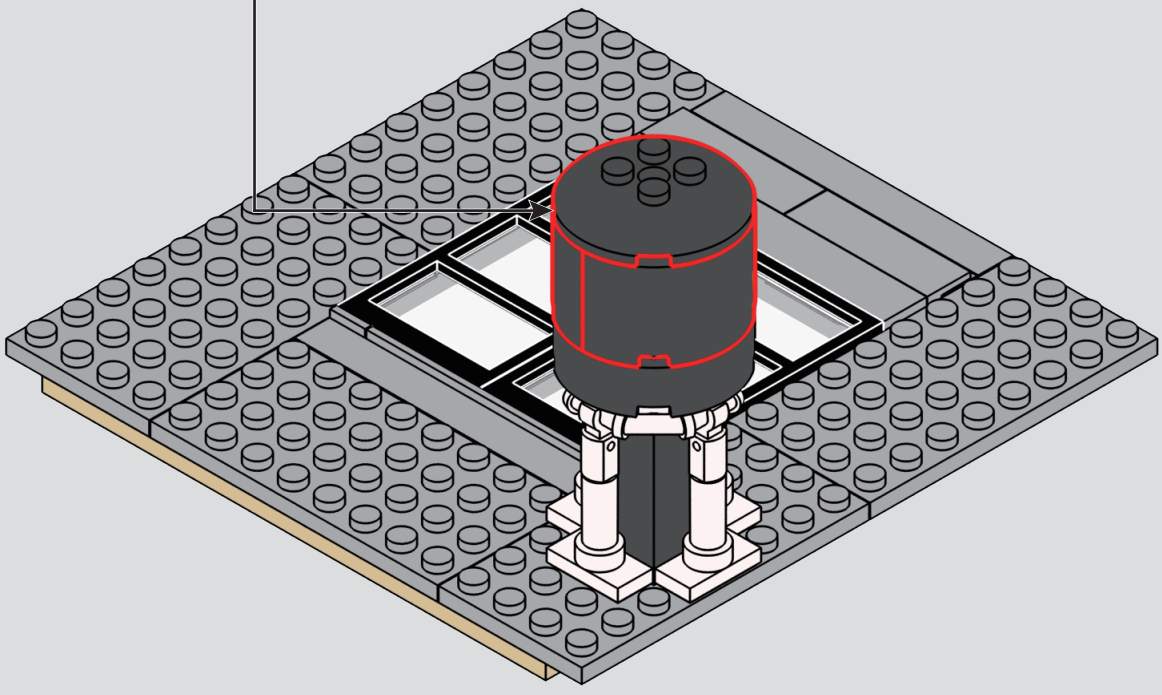

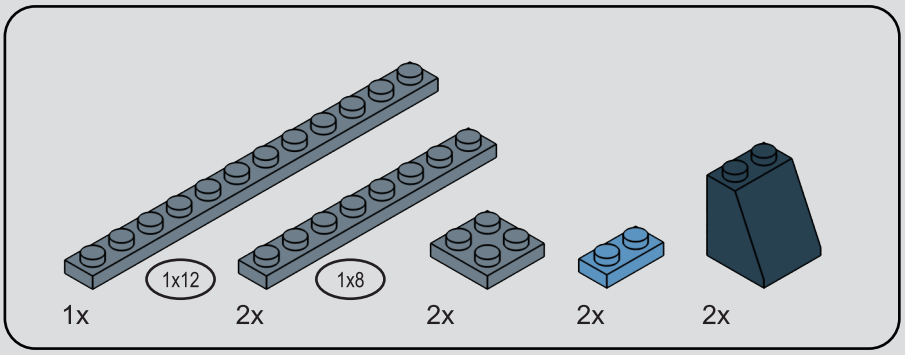

281

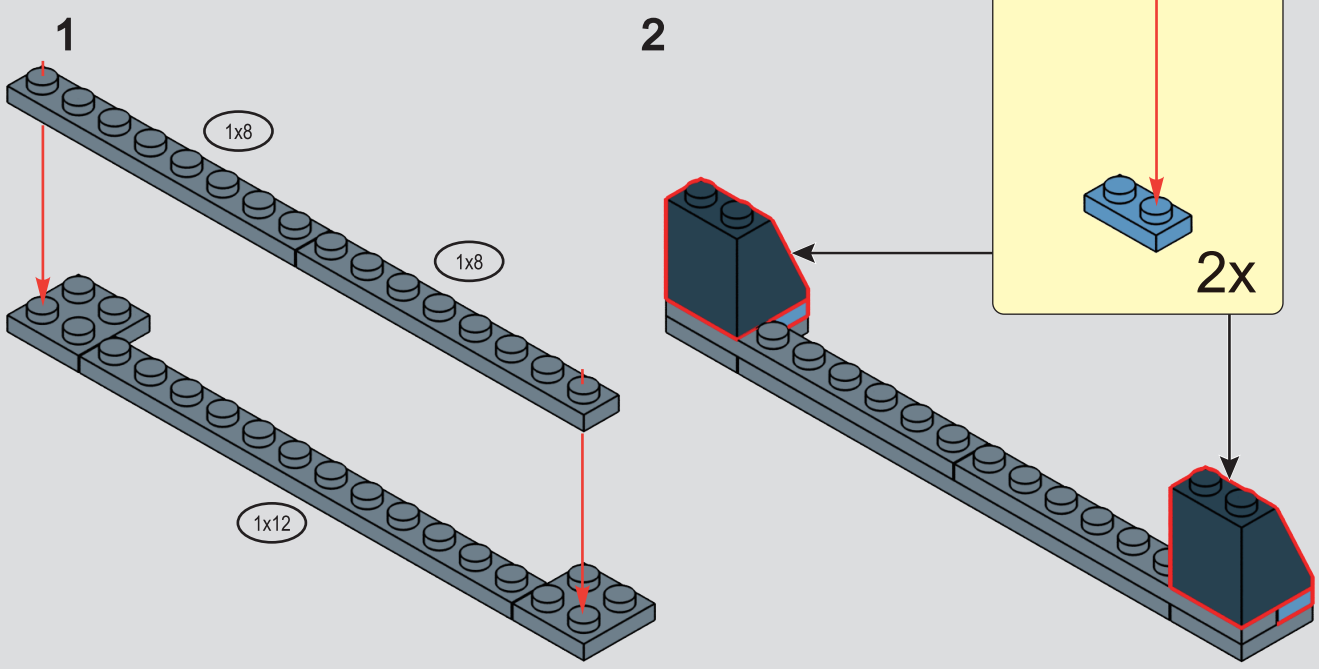

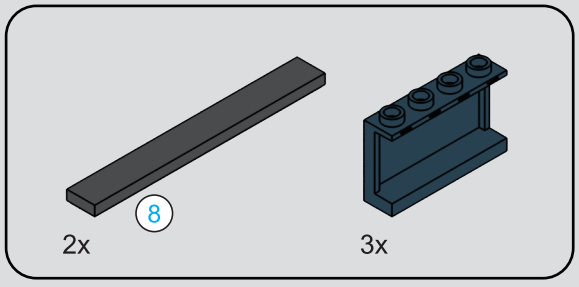



282

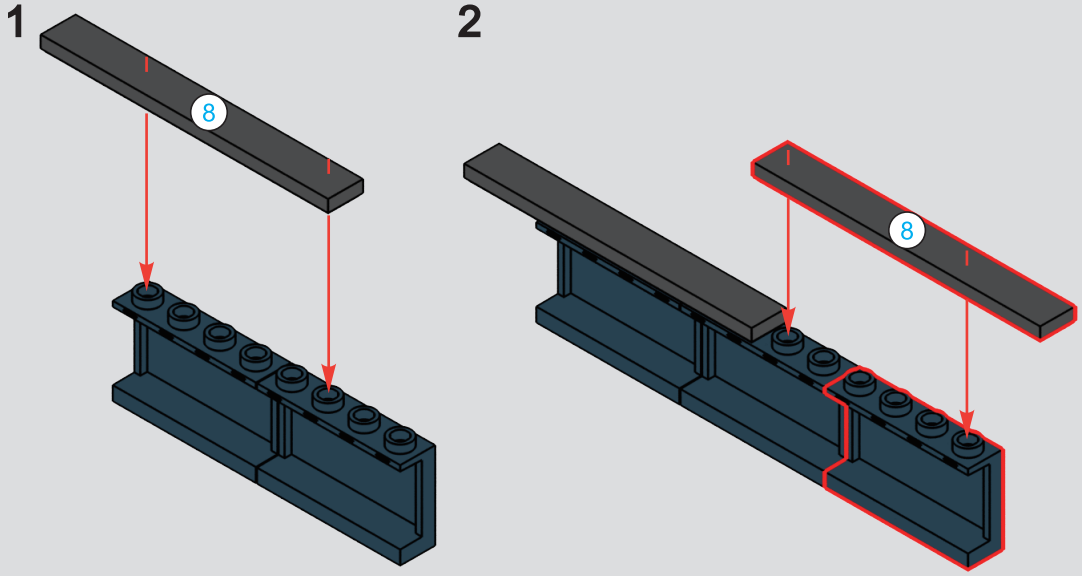

283

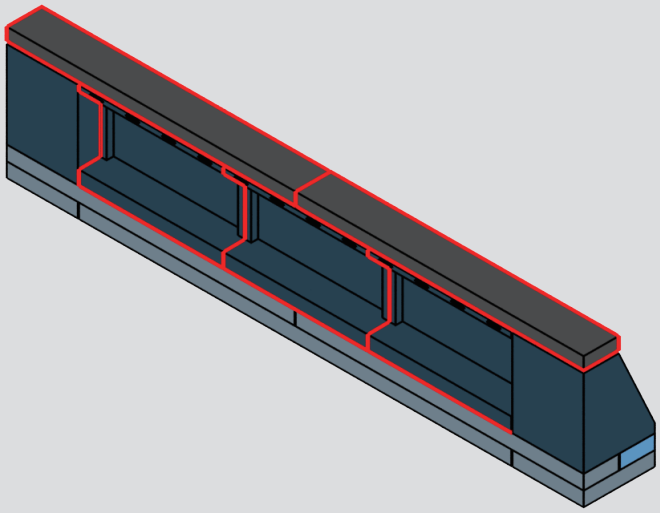

284

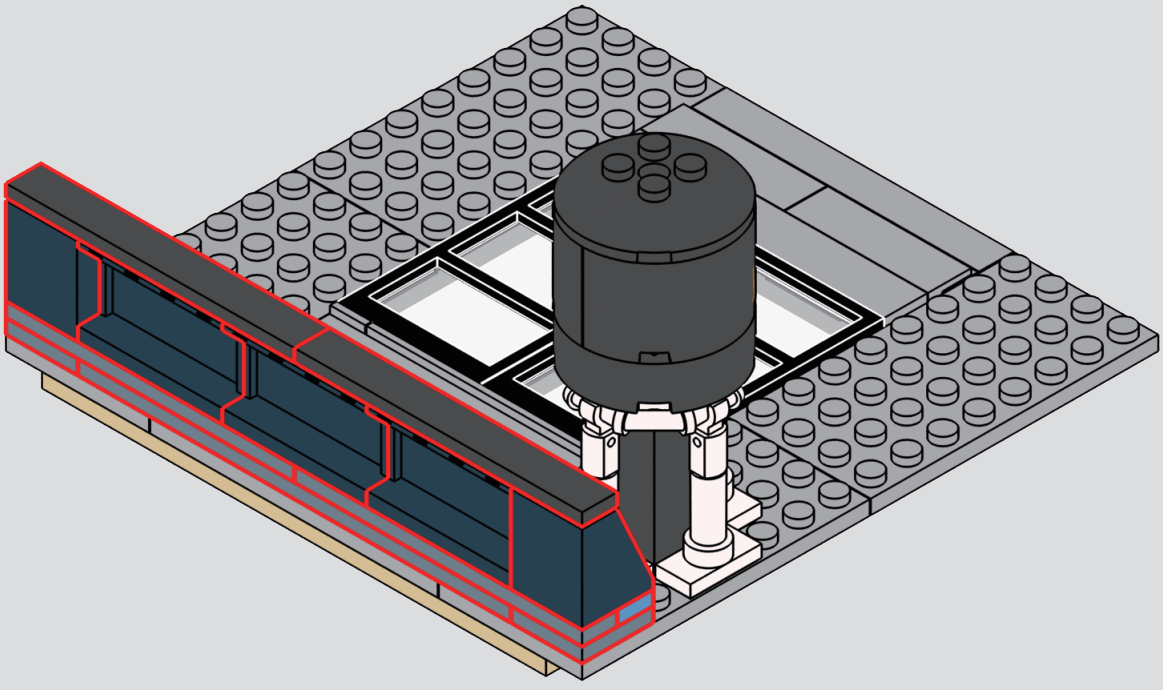

285

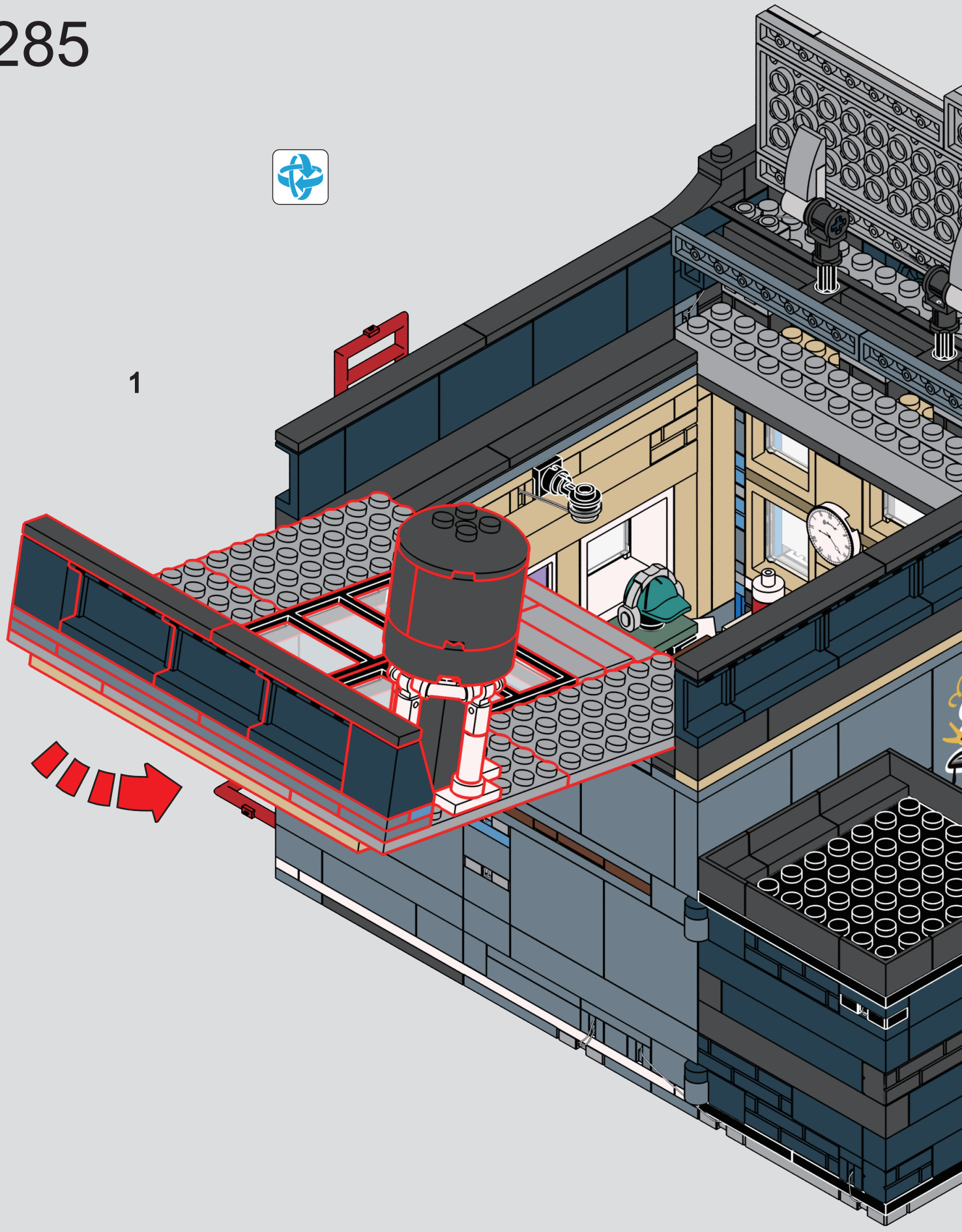

2

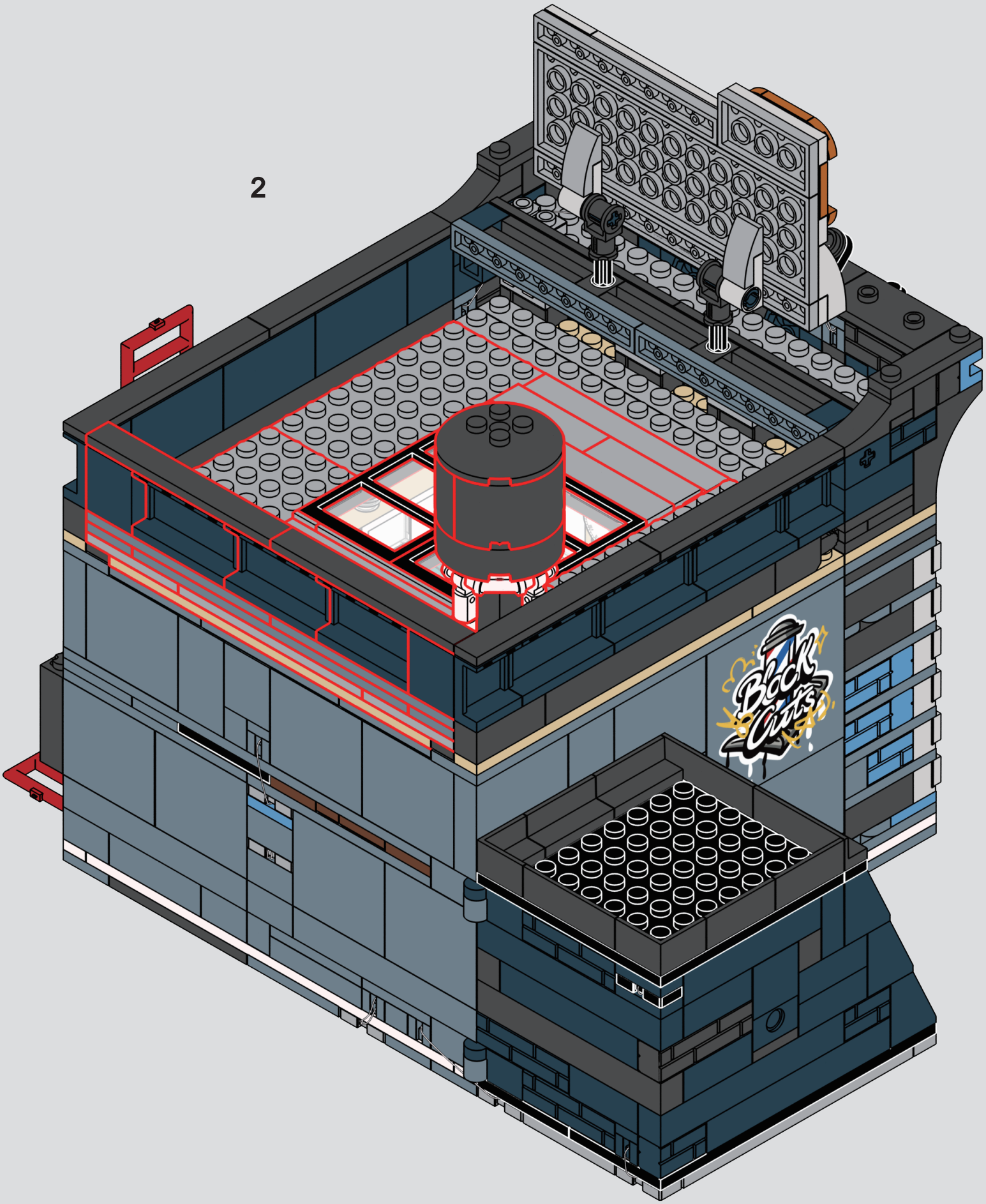

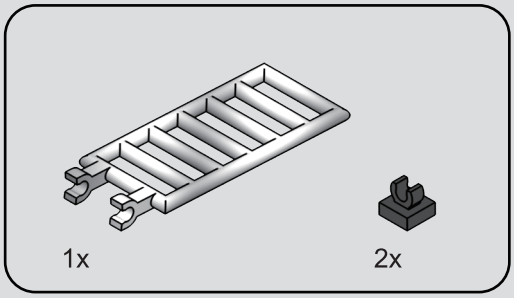

286

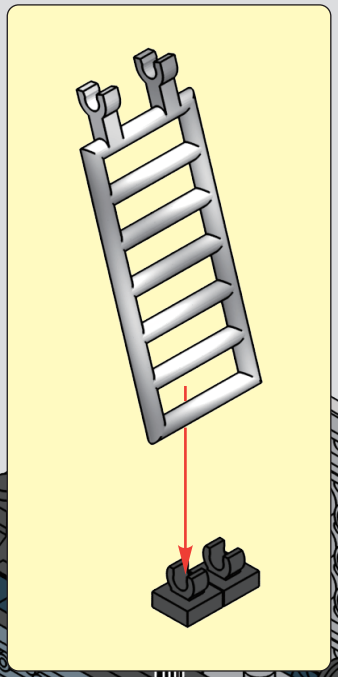

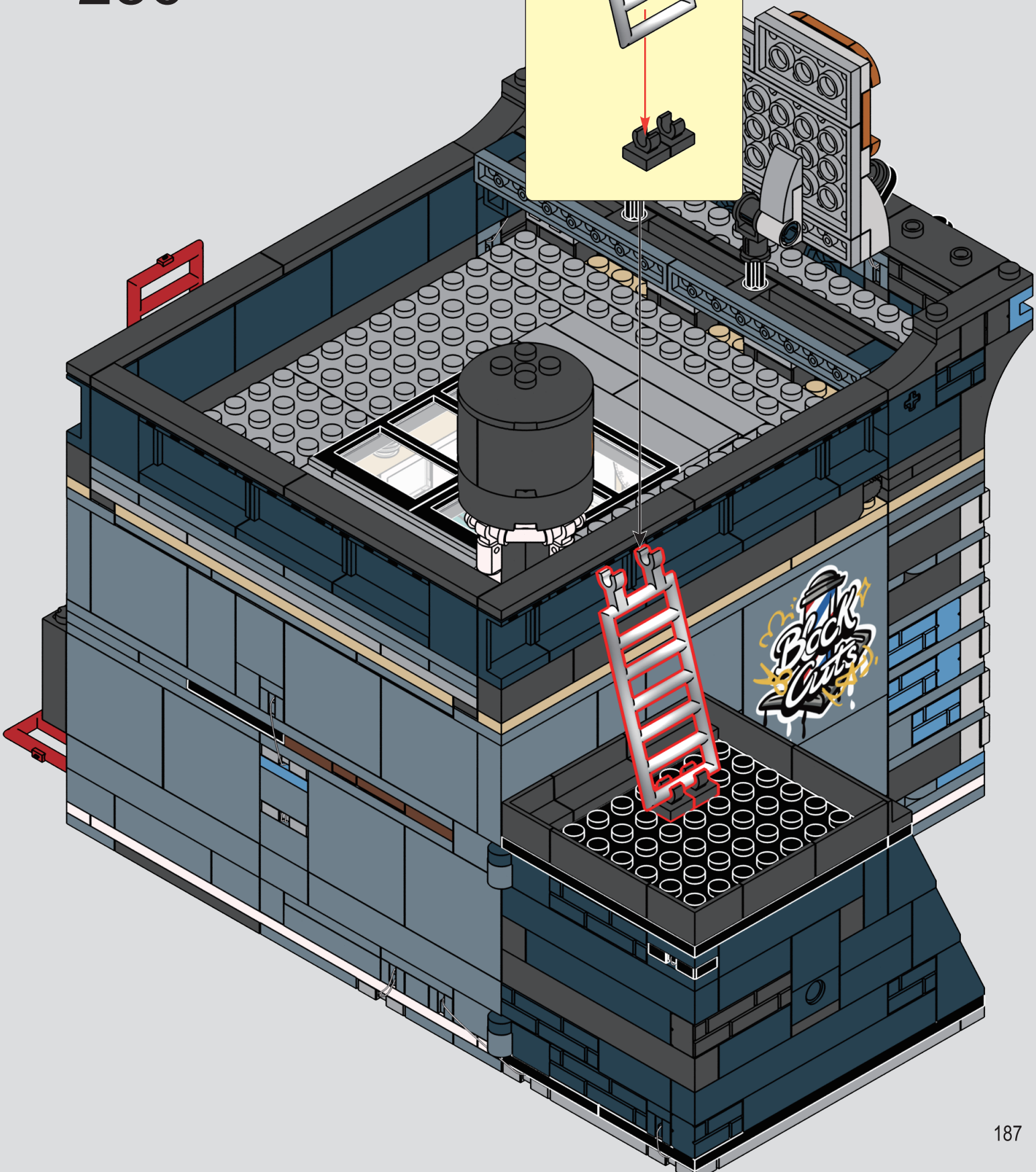

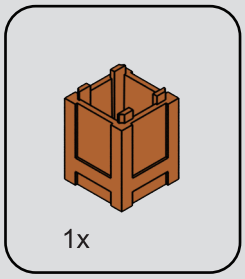

287

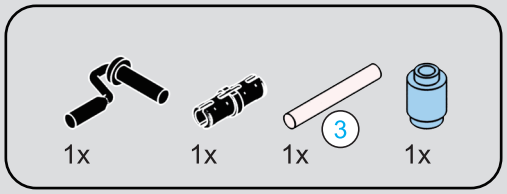

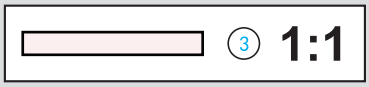

288

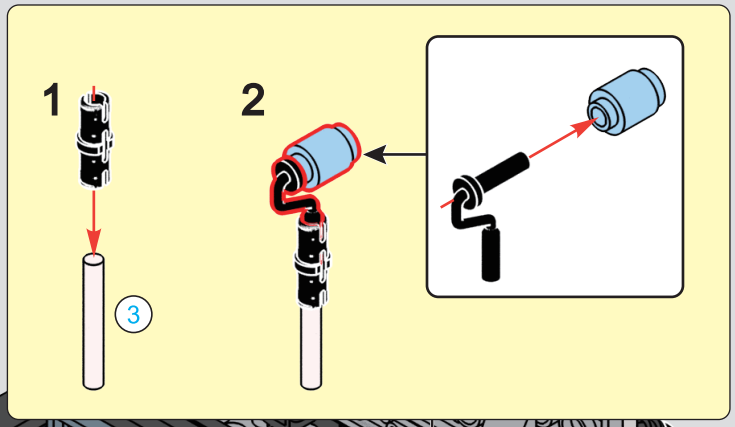

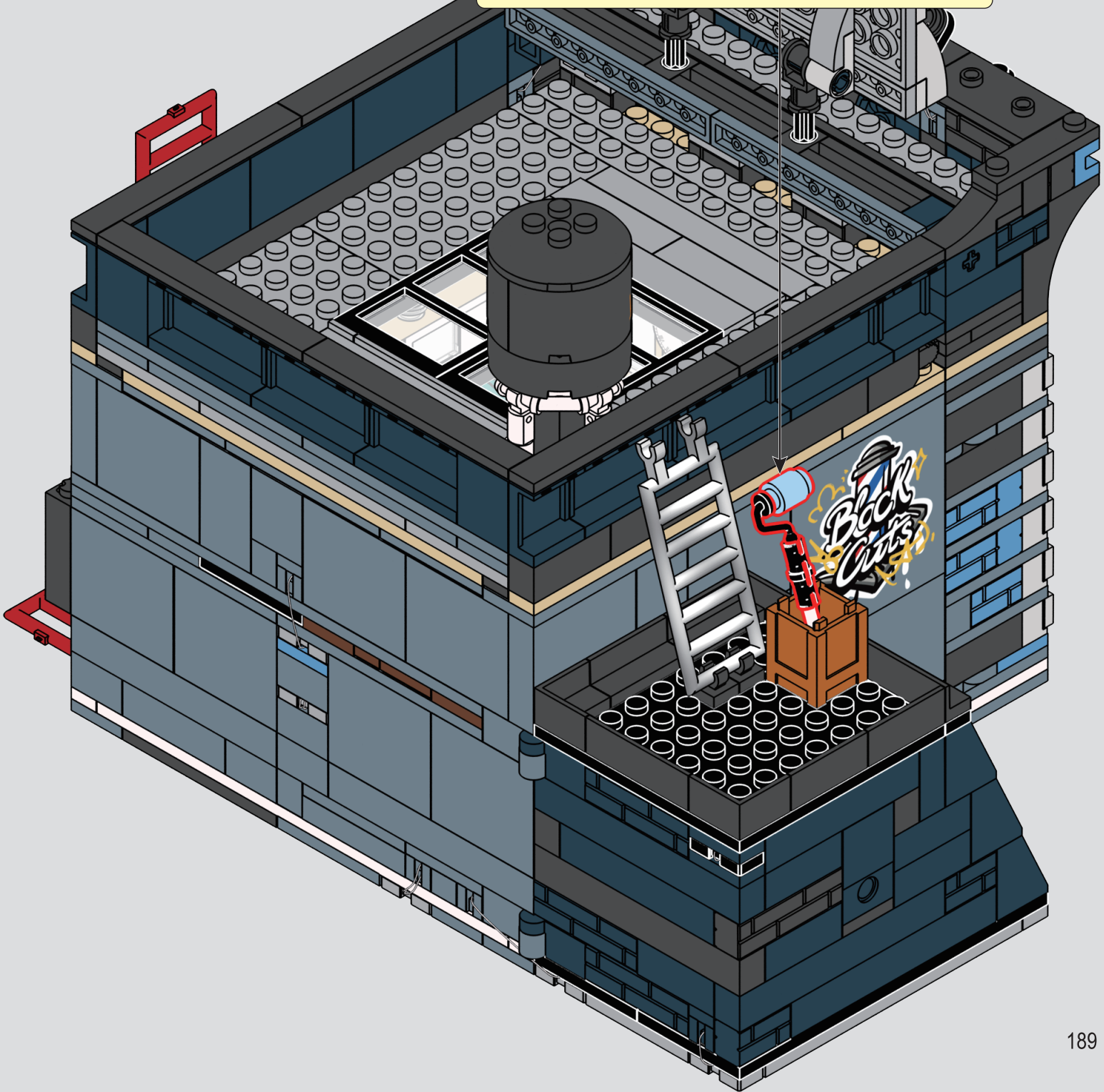

289


Y'ALL NEXT!
BEARD BOB'S
BARBER
RUNNIN' THE CHAIR SINCE '73
BARBER
BEARD BOB'S BARBER
718-555-XXX
FADE | LINE-UP | BRAIDS | LOCS
NO.012
SHAVE & GROOMING
HOT SHAVE | BEARD TRIM | RAZOR CUT
BEARD BOB'S BARBER
555
212
XXX

290

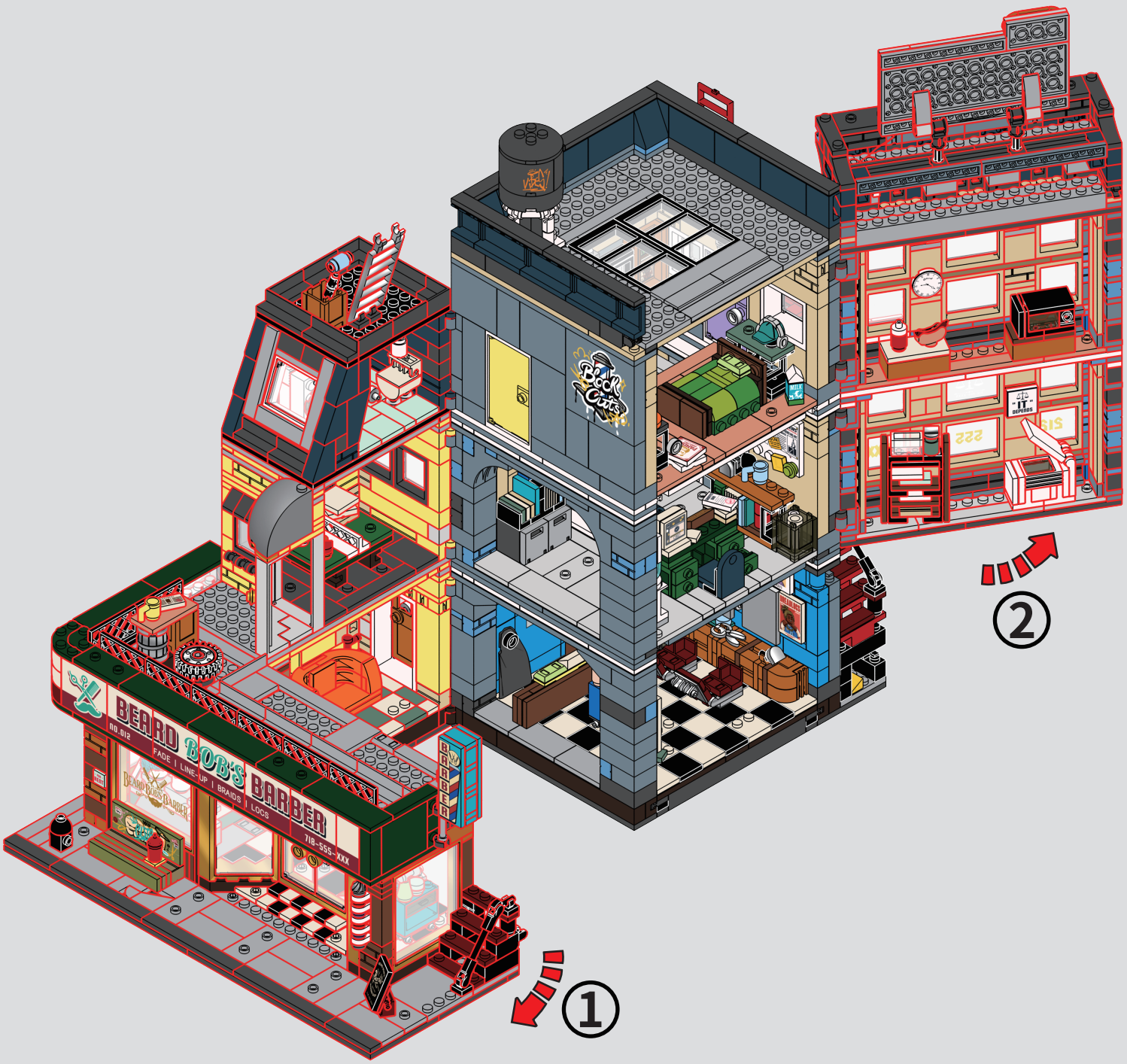
BEARD BOB'S BARBER
FADE | LINE-UP | BRAIDS | LOCS
718-555-XXX
BARBER
Block Cuts
IT DEPENDS
①
②


Block Cuts
MILK
"IT" DEPENDS
UNLADIES
BARBER

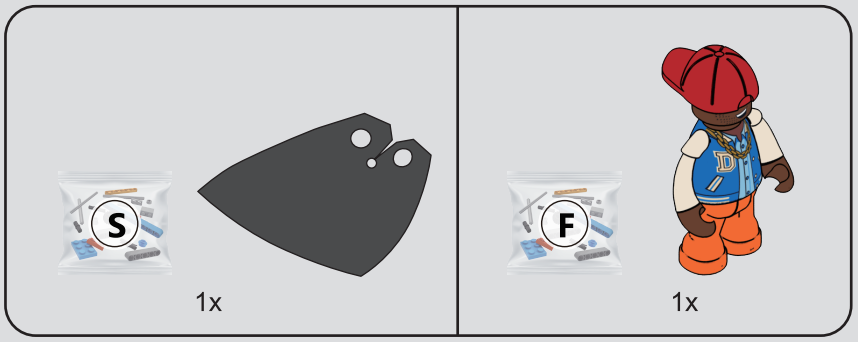

292

1



2

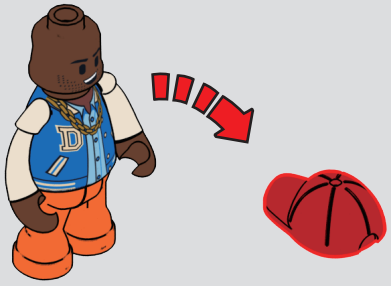

3

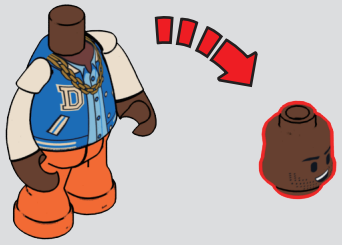

4



5



6

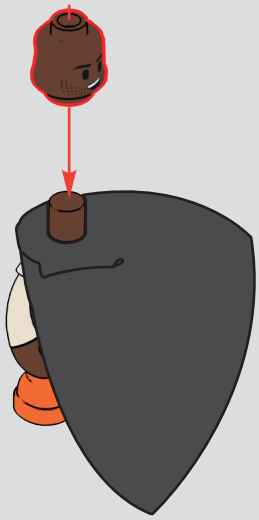

7

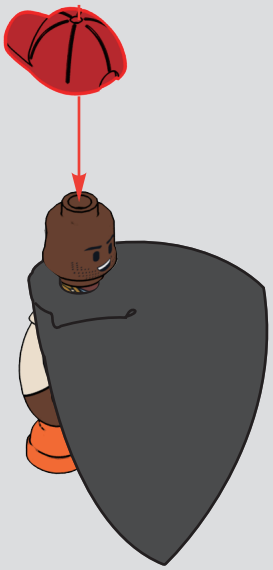

8

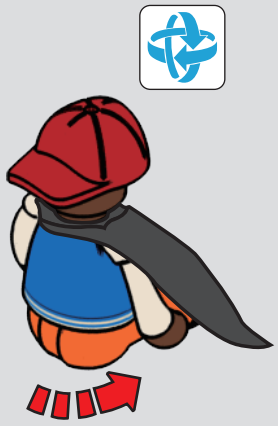

293

1

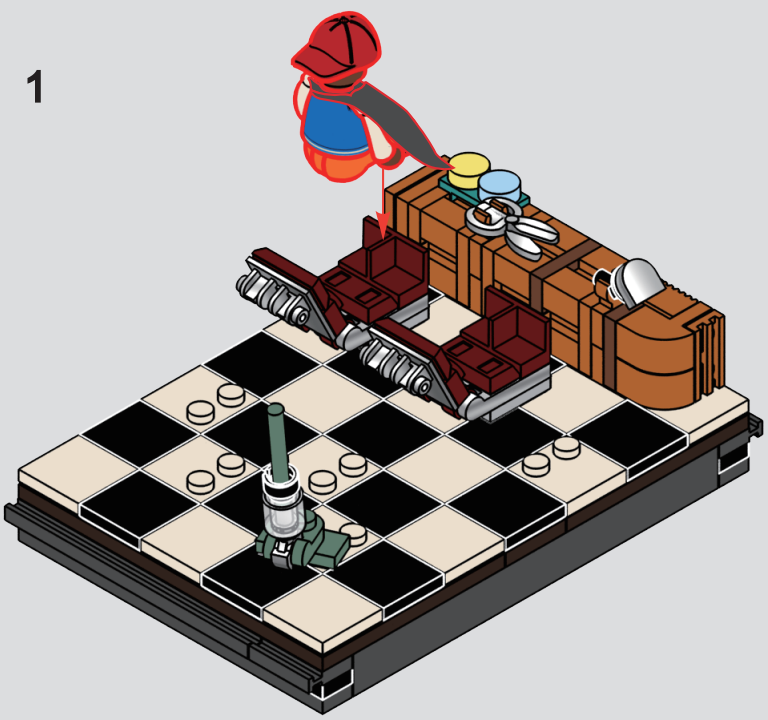

2



294



295



Y'ALL NEXT!
BEARD BOB'S
BARBER
RUNNIN' THE CHAIR SINCE 7
Block Cuts
BARBER
LXXX
555
212
BEARD BOB'S BARBER
718-555-XXX
FADE | LINE-UP | BRAIDS | LOCS
NO.012
SHAVE & GROOMING
HOT SHAVE | BEARD TRIM | RAZOR CUT
BARBER SHOP

美式街头系列

感谢您对本系列产品的喜爱与支持，如您在拼搭过程中遇到任何问题，均可通过微信扫描二维码联系企微客服寻求协助。
如果您还有其他意见或者建议，也请务必通过企微客服告知我们，期待与您的再次相遇！

企微客服

STREET FUSION

We would like your opinion on the new product you have just purchased. Your feedback will help shape the future development of this product series.
Please visit: https://www.lumibricks.com/pages/feedback
We sincerely hope you enjoy the product and we can't wait to see you again soon.Please let us know if we can do anything else to help!



• STREET FUSION/美式街头系列



19010
Streetball Tour Bus/街球巴士



19009
Boxing Club/拳击俱乐部



19005
Factory House of Music/音乐砖厂

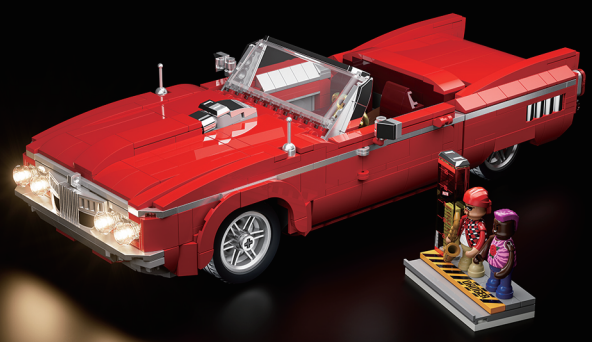

19008
Collectible Low Rider - Big Red
西海岸跳跳车

• STREET FUSION/美式街头系列



19006
Underground Dance Battle/街头斗舞



19004
Graffiti Bus Stop/涂鸦巴士站



19003
Record Store/唱片店



19002
Skate Shop/滑板商店

• TOWN LIFE/小镇生活系列



15010
Italian Homestyle Restaurant
意式家庭餐厅



15008
Toy Store/玩具店



15007
Brick Art Gallery/布里克艺术画廊



15006
Heritage Tram and Station
复古有轨电车

• TOWN LIFE/小镇生活系列



15005
Artisan Gelato Studio/冰淇淋商店



15004
Balcony Theatre/流光剧院



15002
Book Cafe/咖啡书屋



15003
Antique Store/收藏品商店

V1.1

Lumibricks and Lumibricks logo are trademarks of the Lumibricks group.

WWW.LUMIBRICKS.COM

如果您遇到任何问题，请通过以下方式与我们联系：

天猫 小红书

lumibricks灯搭官方旗舰店

会员中心