
KING'S
CASTLE
TREASURY
MIDDLE AGES
12012
3209PCS
16+
Scan the QR code
for a PDF instruction
扫码关注公众号
获取电子版说明书

ABOUT LUMIBRICKS

Welcome to Lumibricks, where imagination meets illumination in the brick world!

Formerly known as FUNWHOLE, the world's first lighting bricks manufacturer, Lumibricks continues its legacy as a trailblazer in the world of building brick sets with a unique twist - integrated lighting that transforms every creation into a radiant masterpiece.

Every Lumibricks' set celebrates the joy of building and the magic of illumination. Whether you're crafting intricate architectures or imaginative scenes, the design details and lighting features bring the sets to life, and also bring you joy and shine whether it is the day or night.

At Lumibricks, we believe in the power of light to transform and elevate. With our slogan, "Delight day and night," we invite you to explore the possibilities of illuminated brick sets. Discover a hobby that doesn't just shine - it glows with your inner creativity.

欢迎来到Lumibricks灯搭的乐园

在这里，我们不仅仅是玩具制造商，我们还是创造快乐的艺术家。

自2014年诞生起，Lumibricks灯搭（原FUNWHOLE）就坚守一个独特的愿景：在日与夜的交替中，为我们的玩家揭示积木之美的无限可能。

作为全球领先的灯光积木品牌，本着充分表现积木套装整体之美的初衷，Lumibricks致力于灯光积木套装产品的开发，将积木与灯光合为一体。

Lumibricks不仅仅是一套普通的积木，更是代表了一种全新的玩乐方式，每一块积木，每一束光线，都承载着我们带给全球数百万家庭更多欢笑的承诺。

我们相信，积木有灯，生活有光，让Lumibricks与你一起，拼搭出更多乐趣，创造属于你的灯光宇宙。

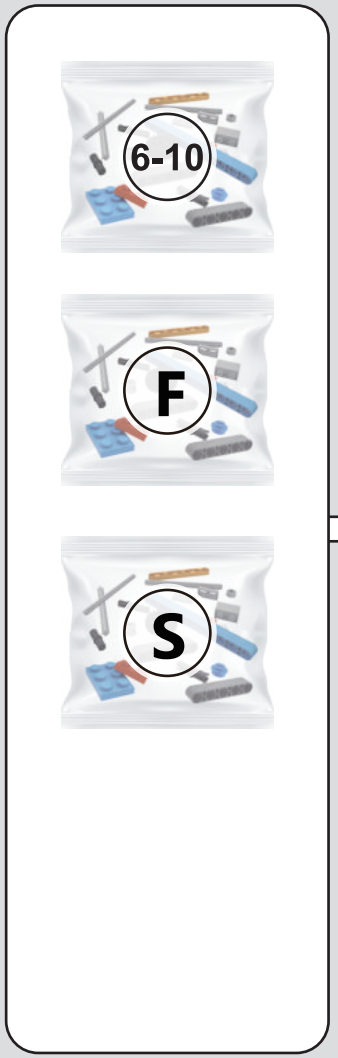
6-10
F
S

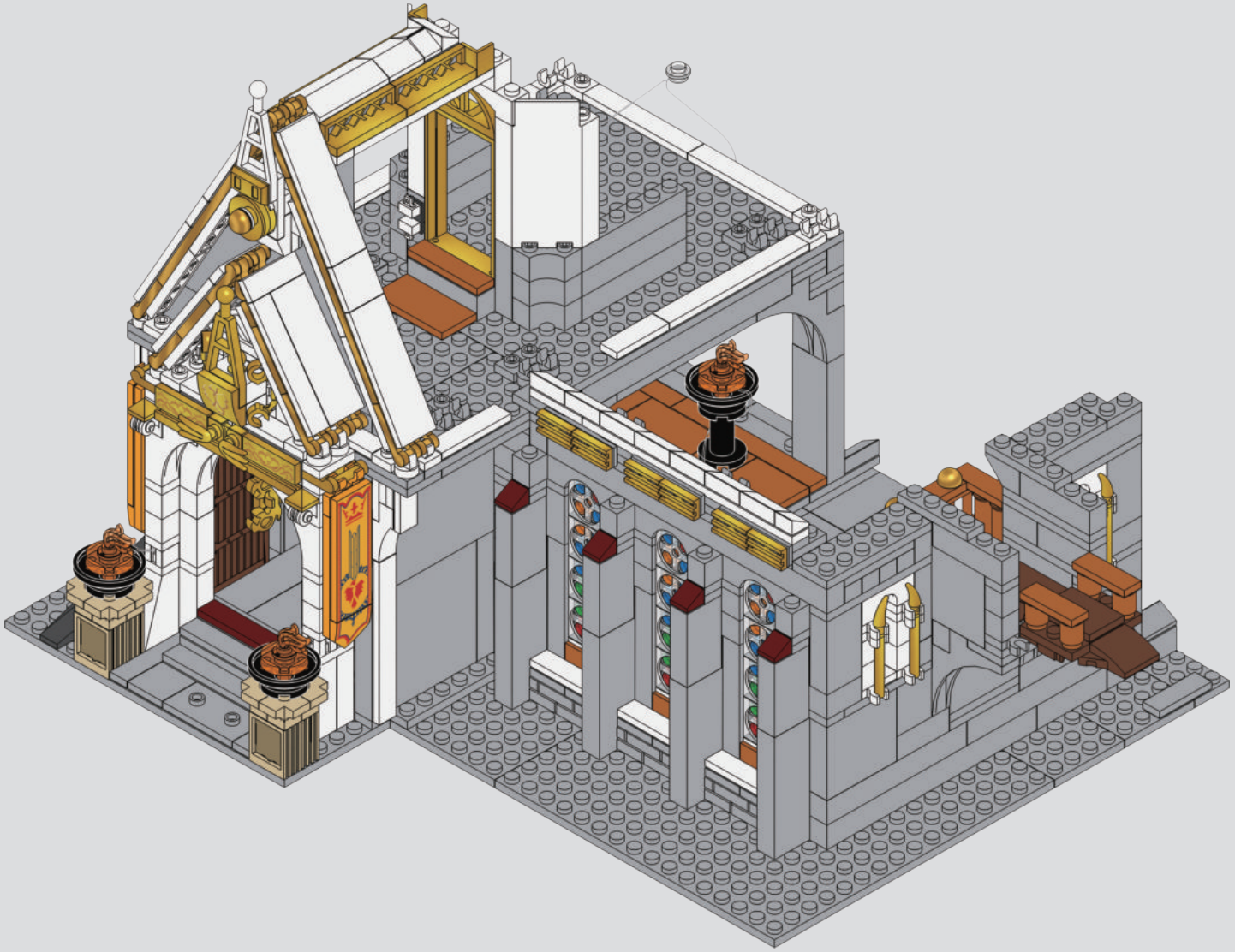


6
S

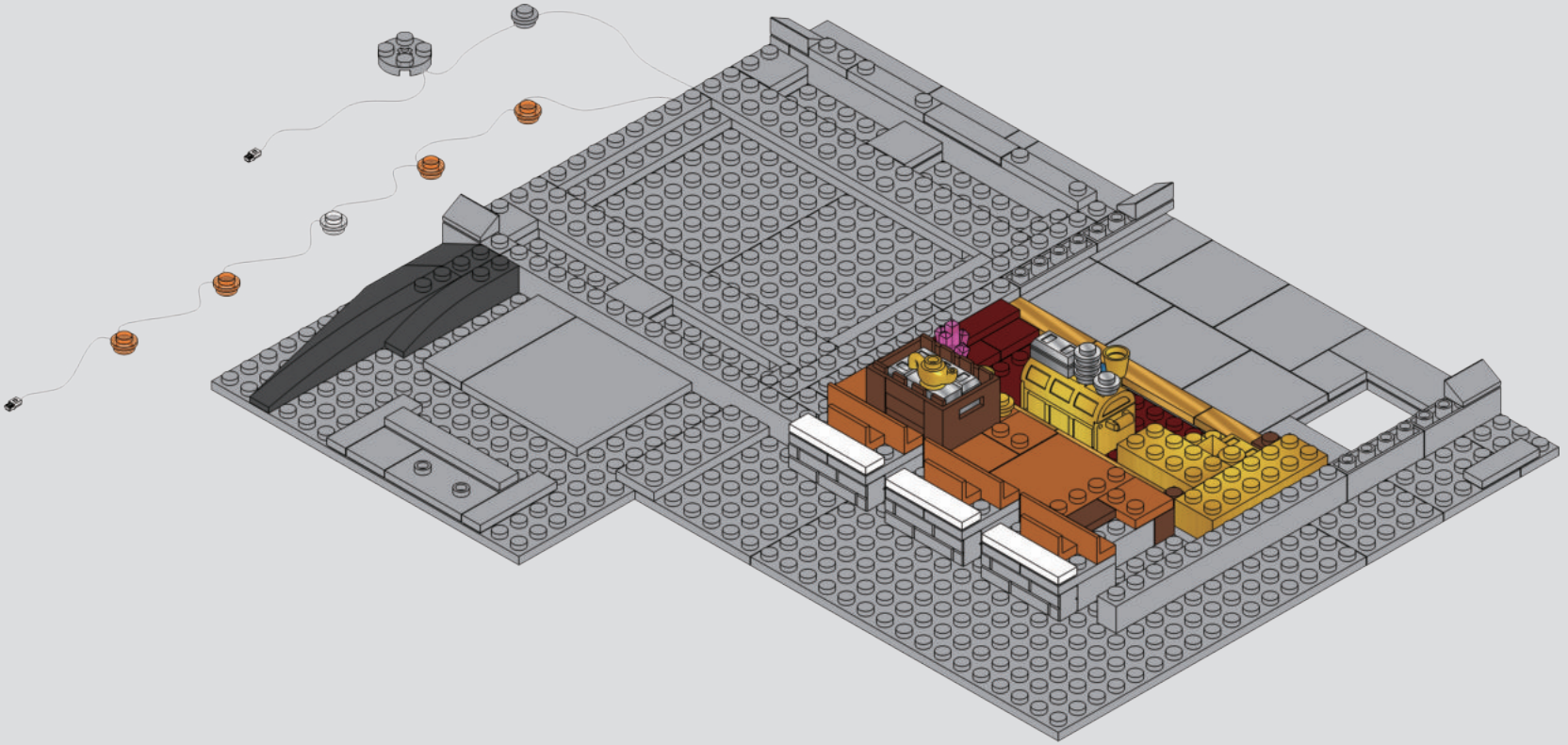

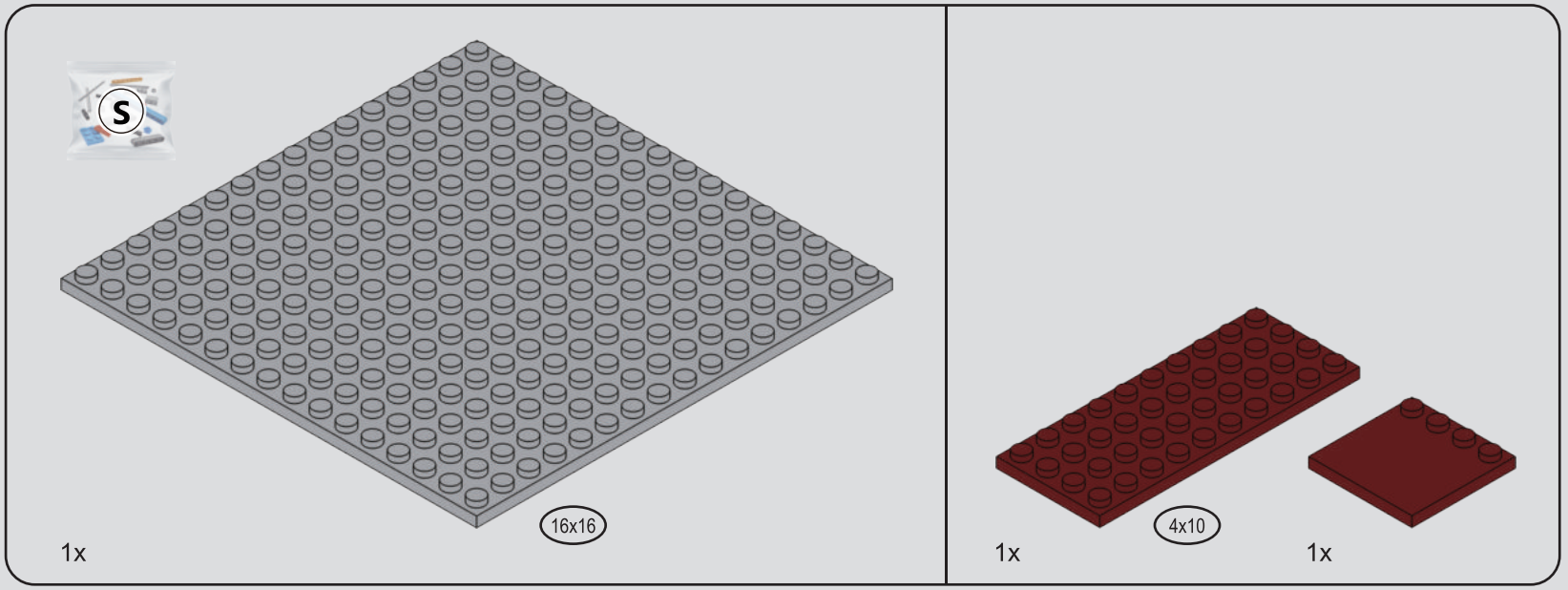

1

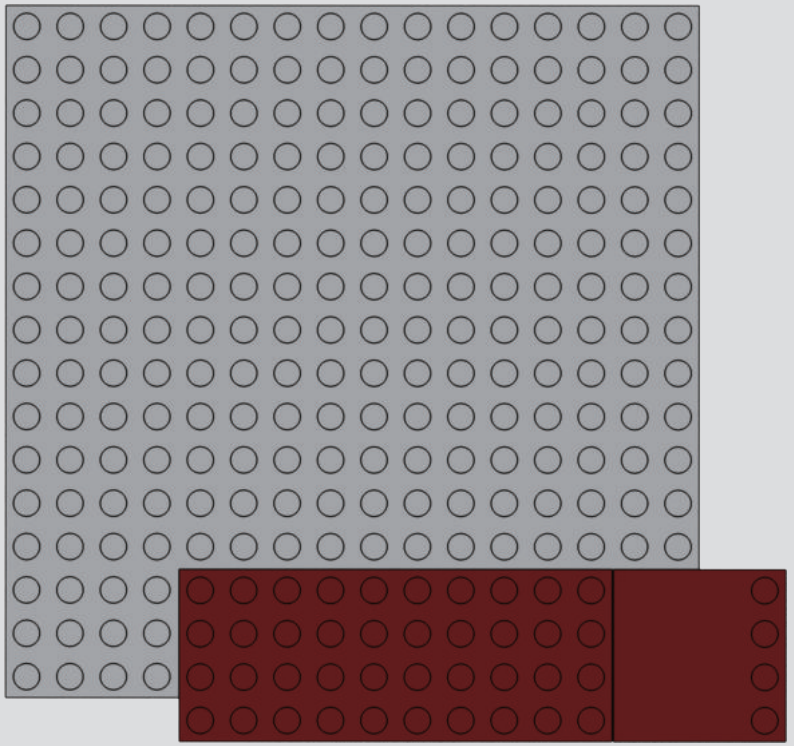

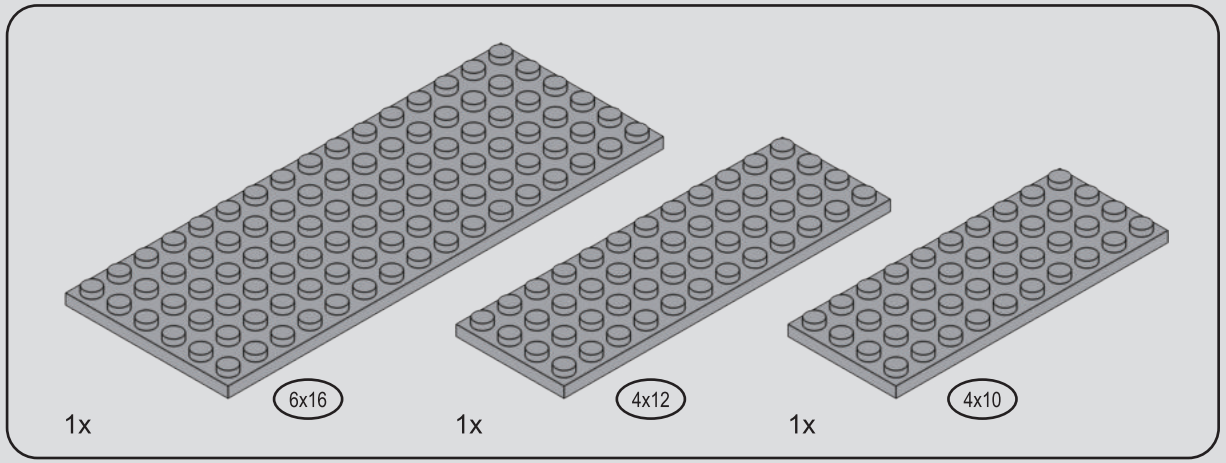

2

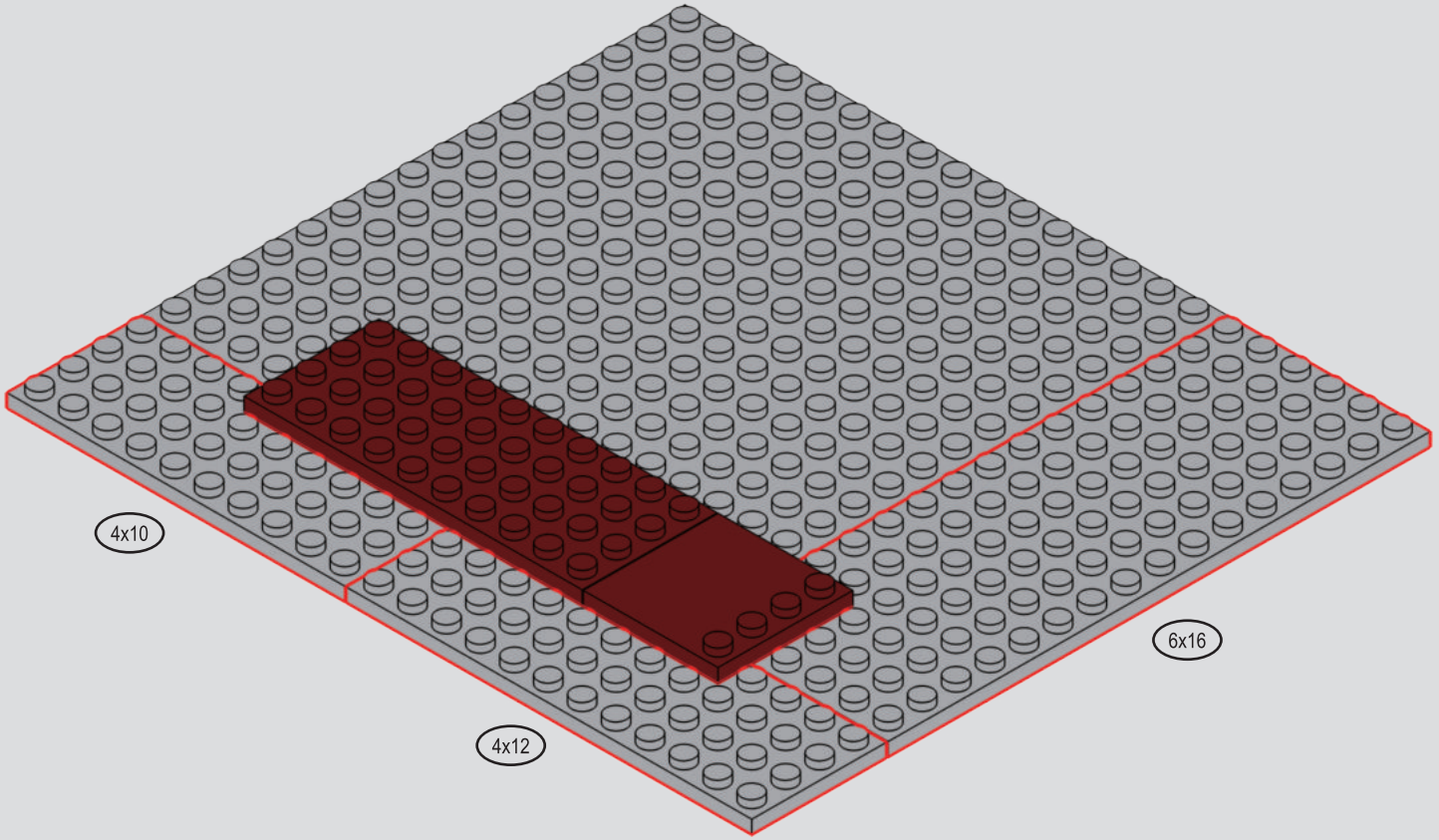

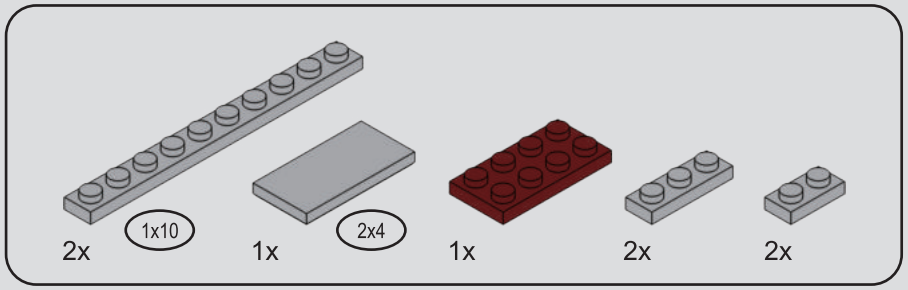

3

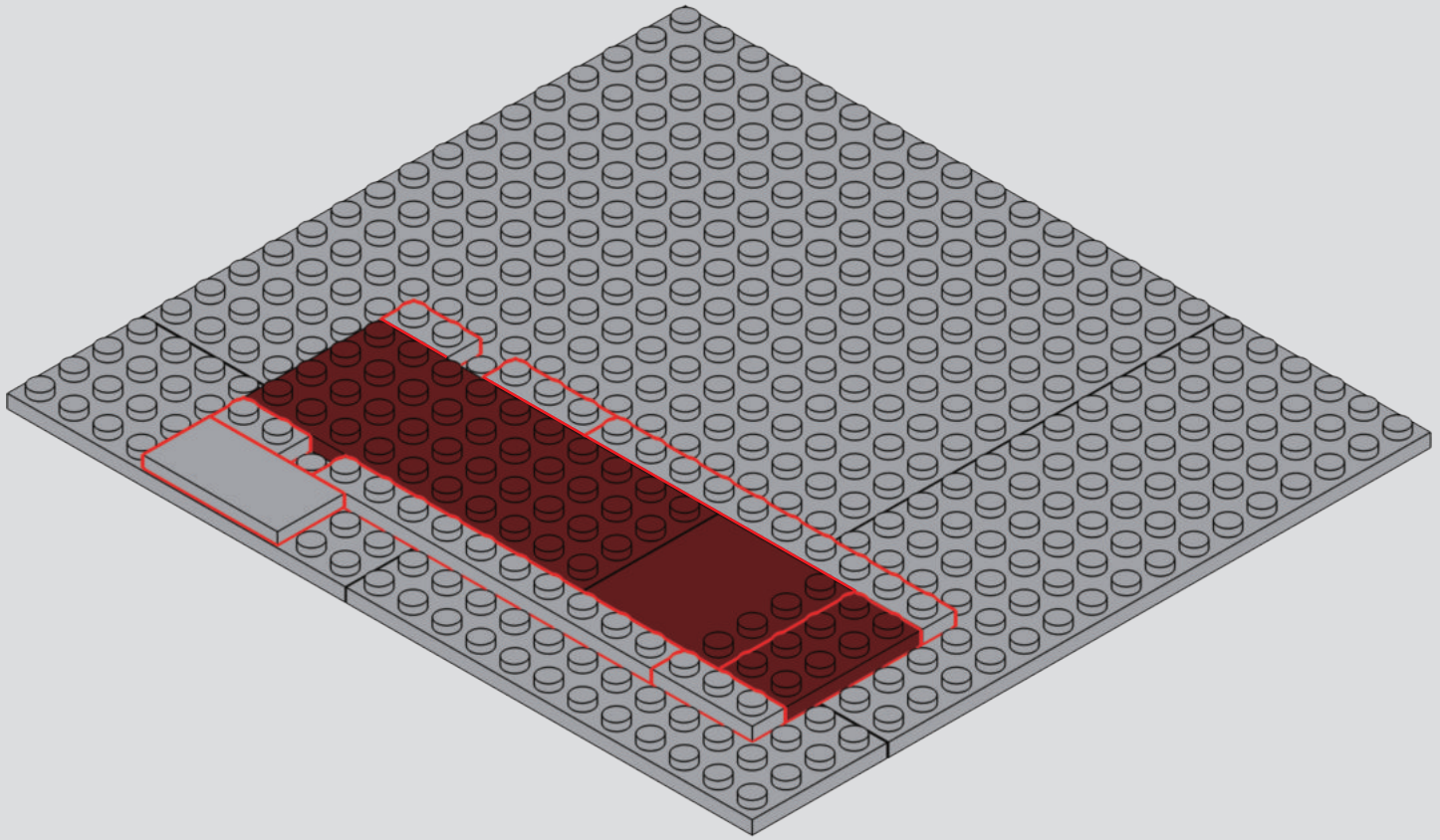

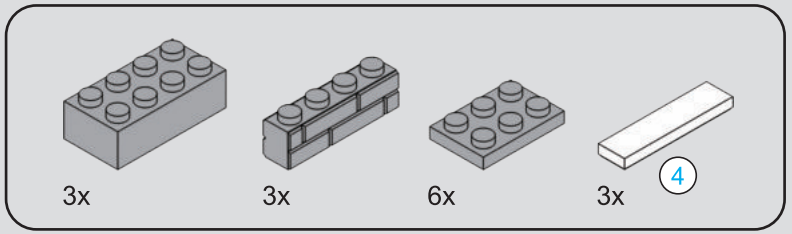

4

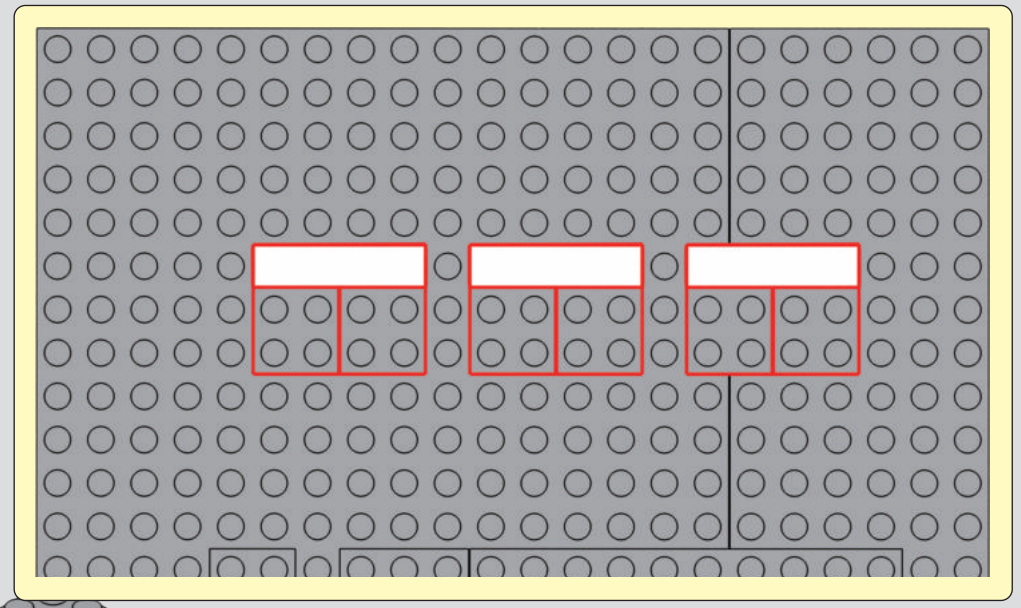

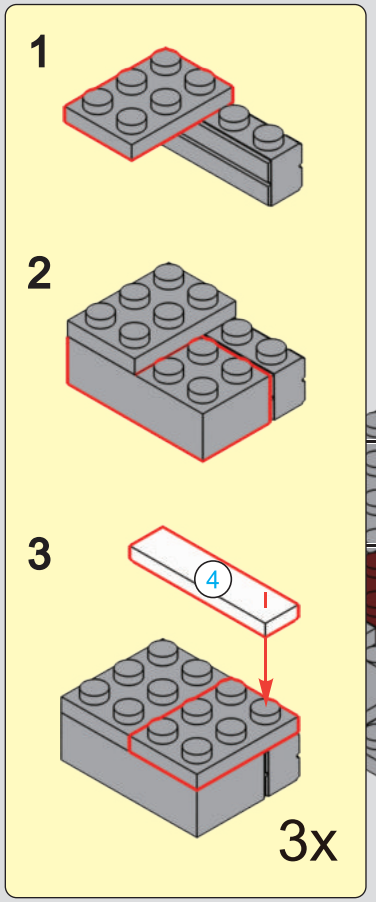

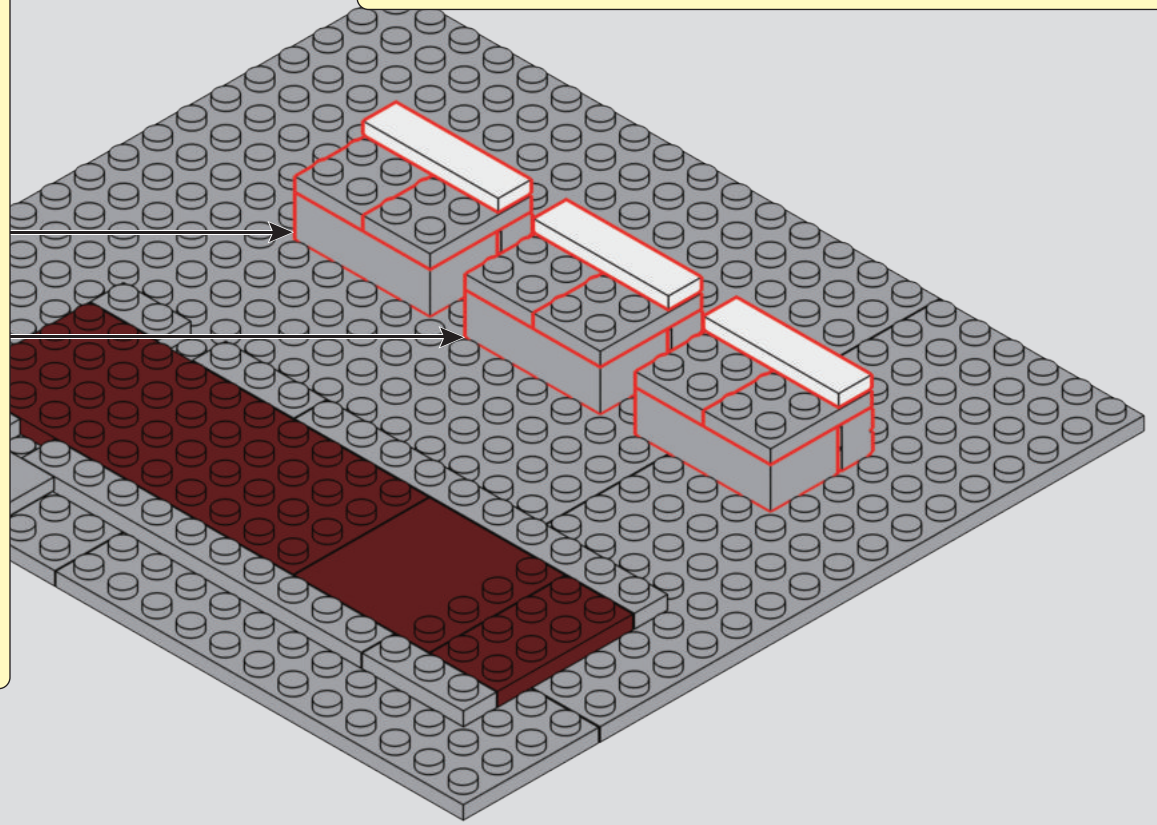

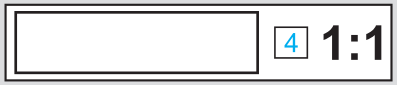

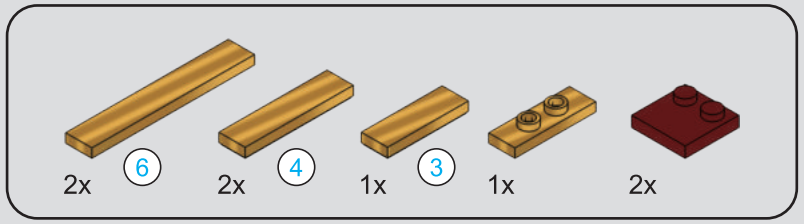

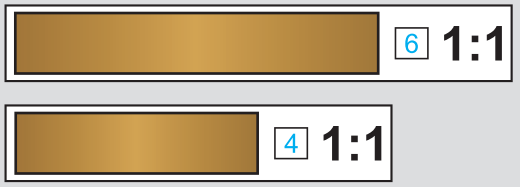

5

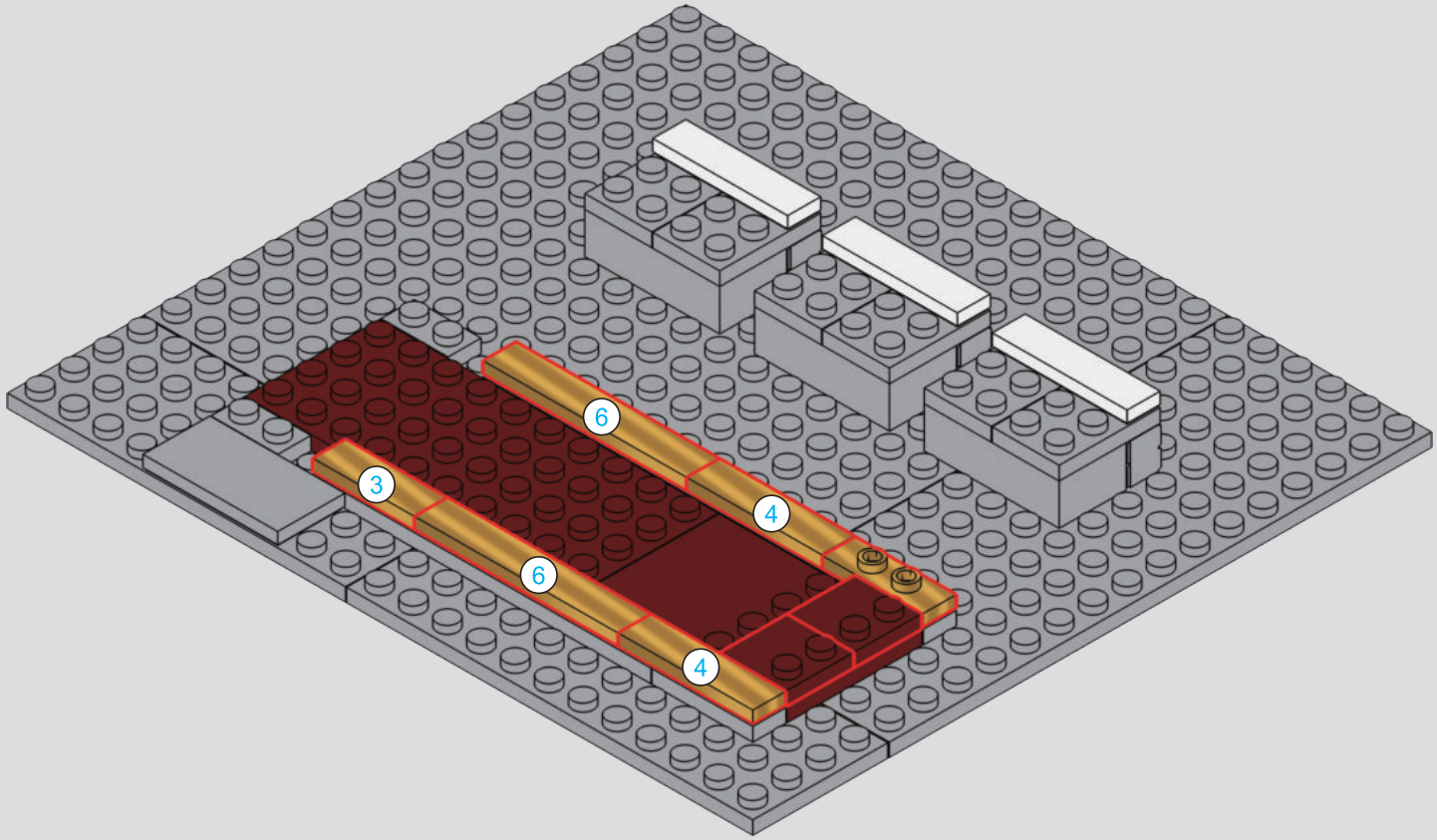

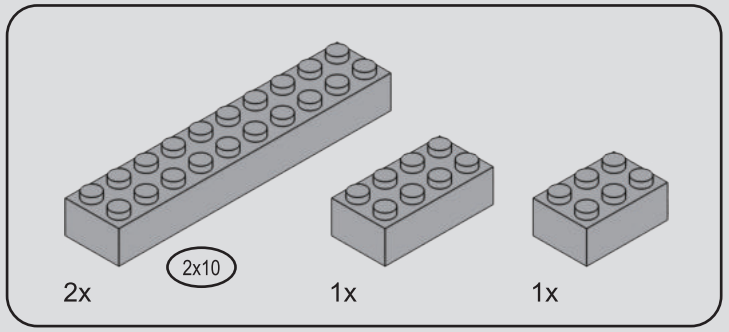

6

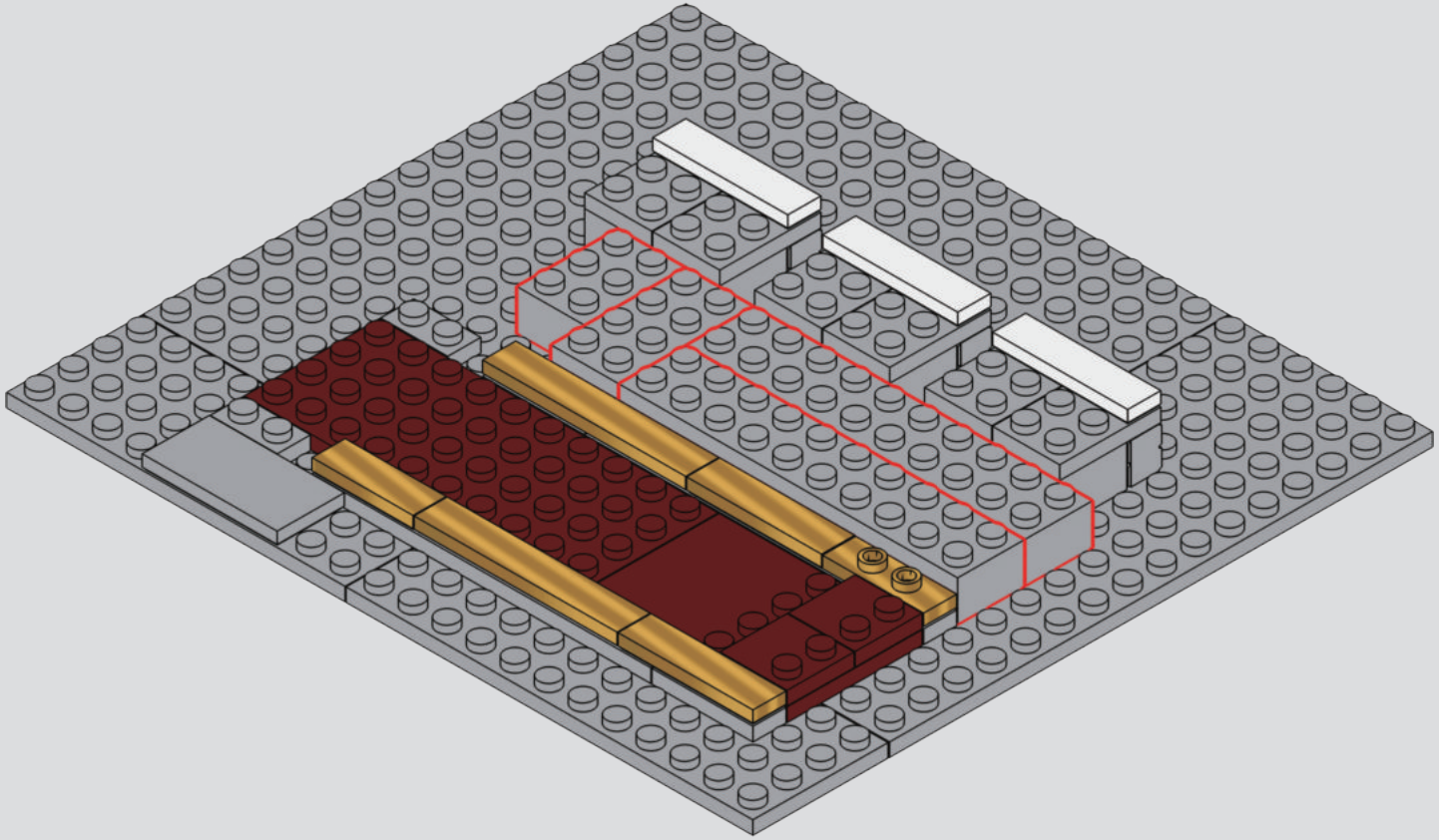

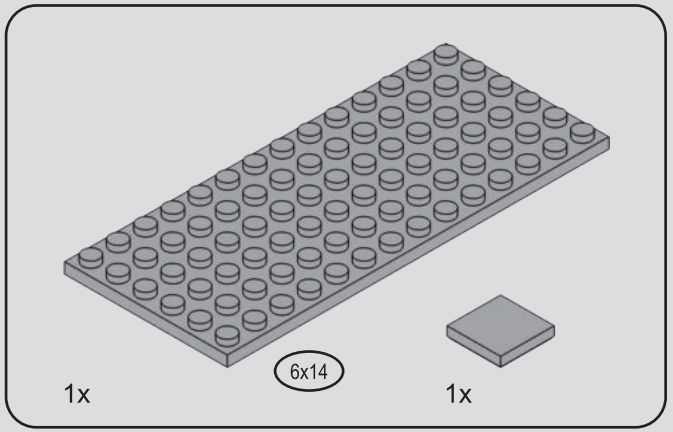

7

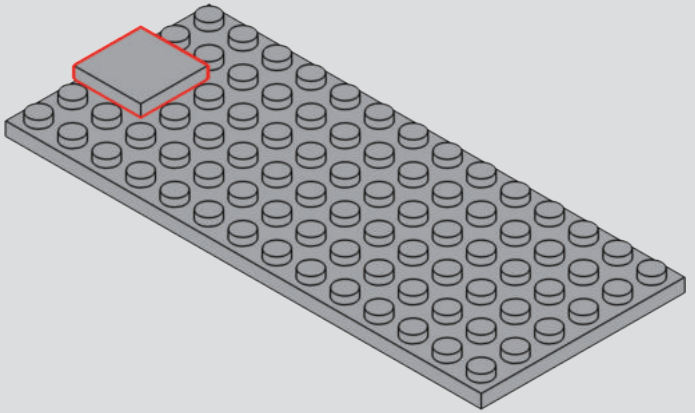

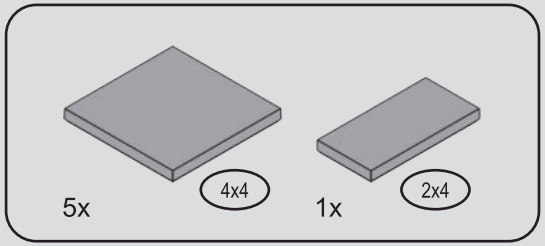

8

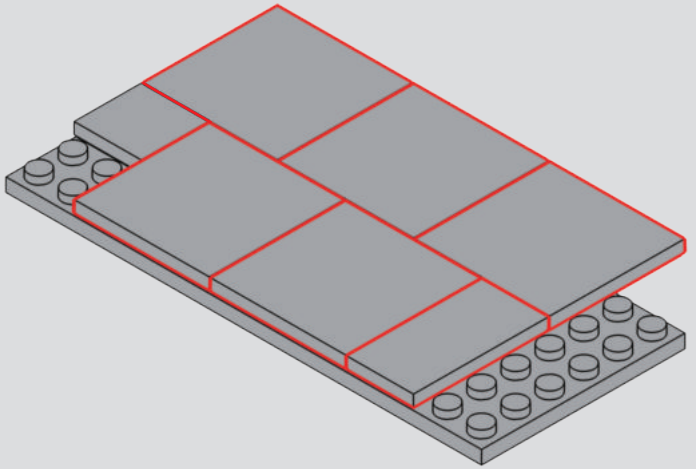

9

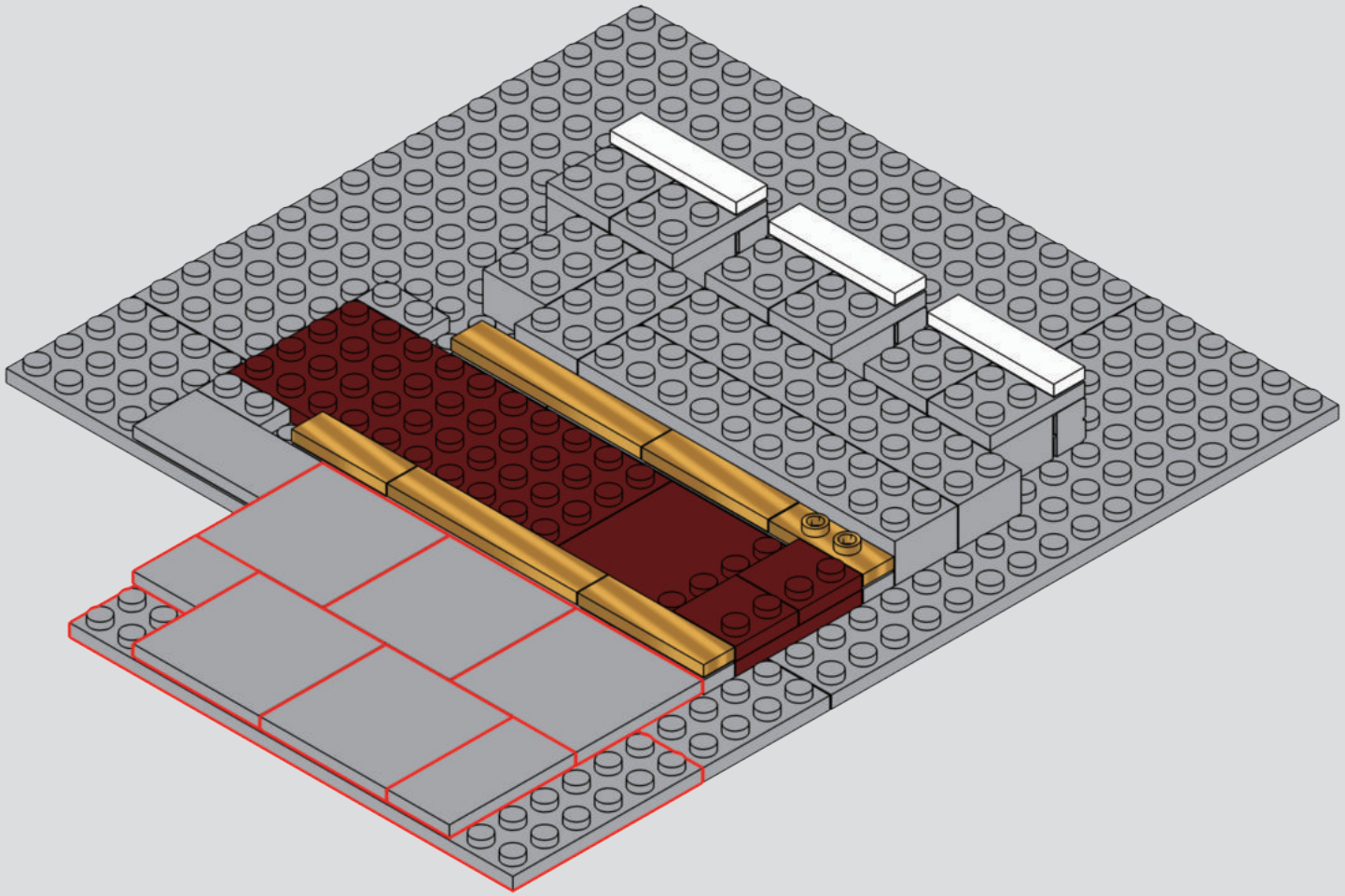

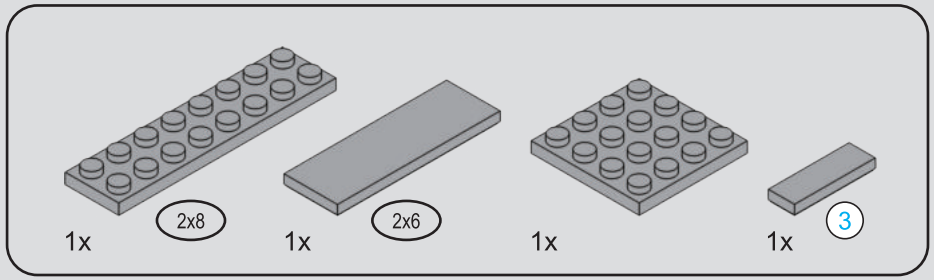

10

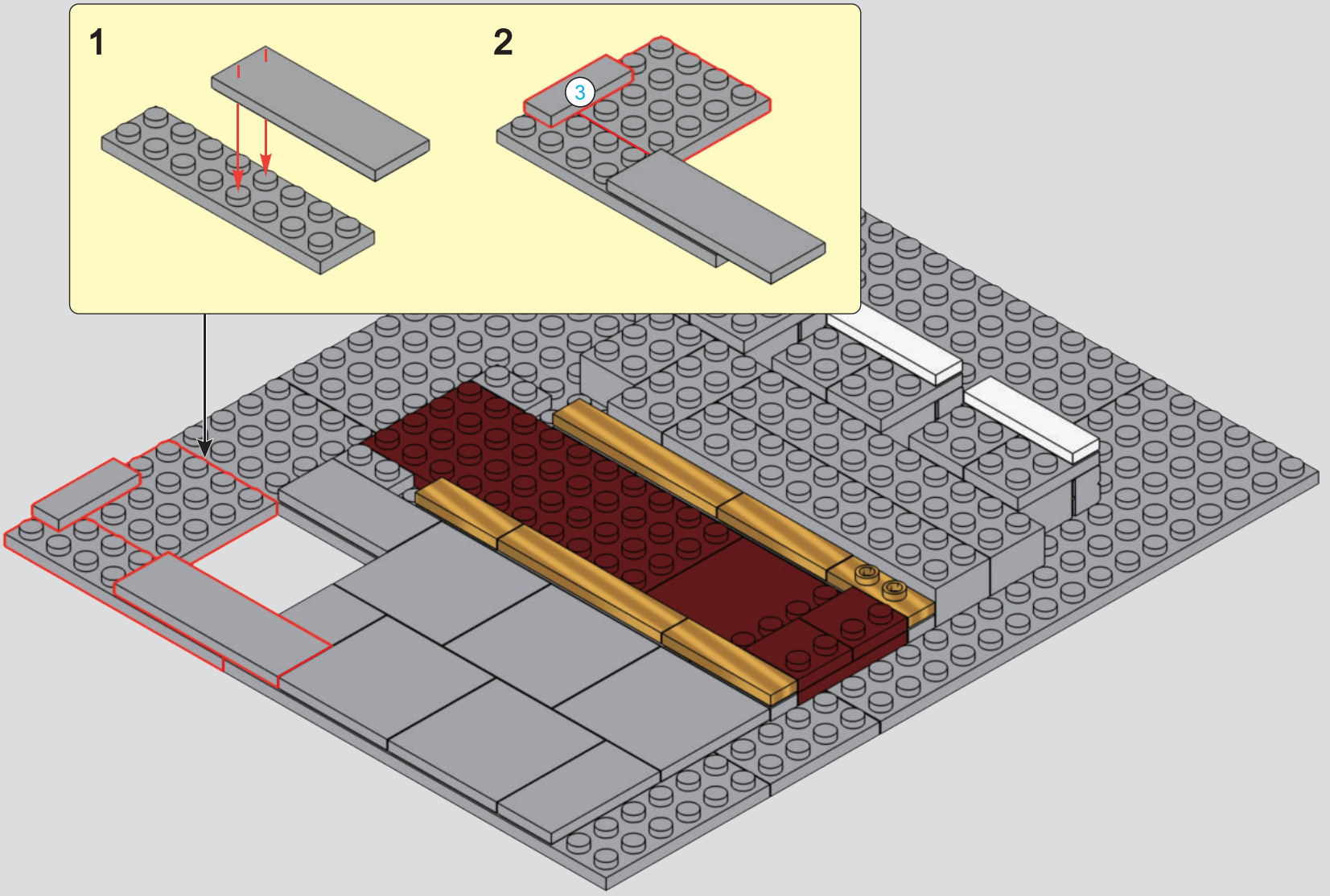

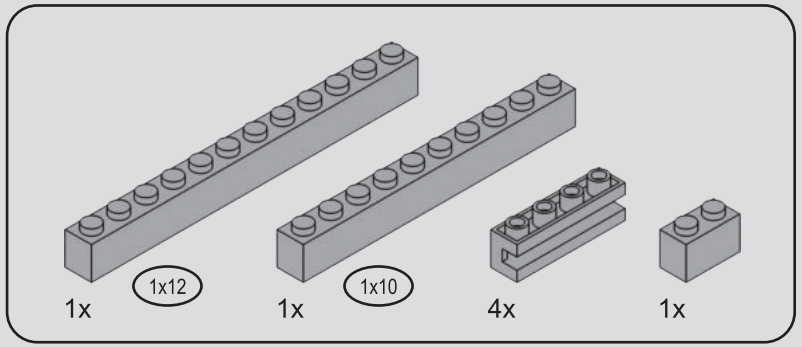

11

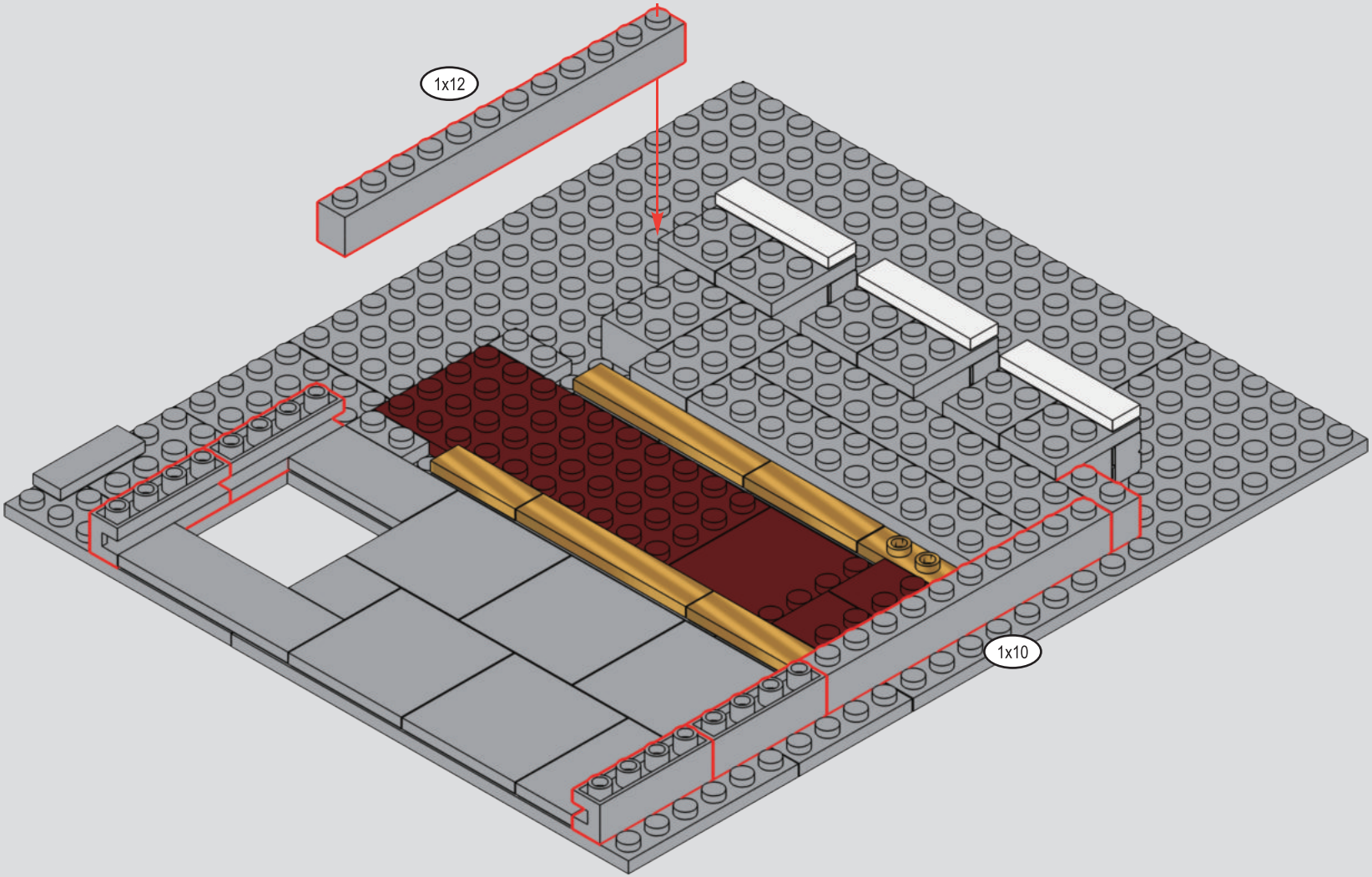

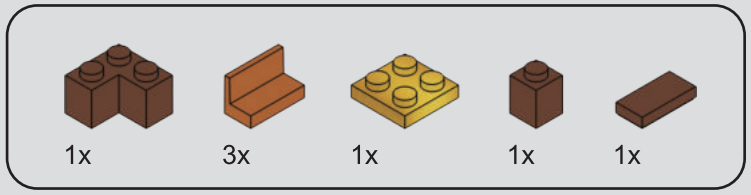

12

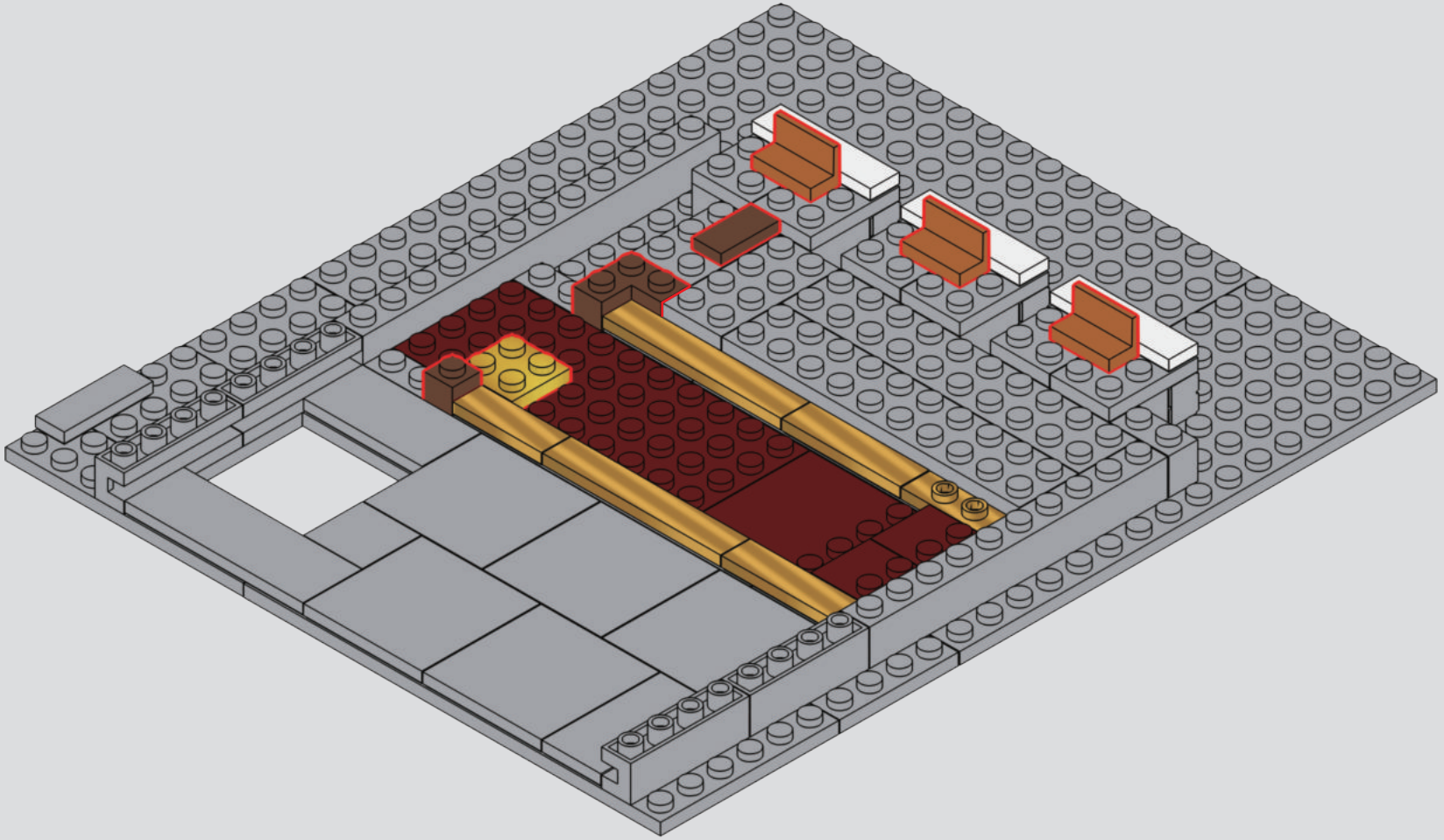

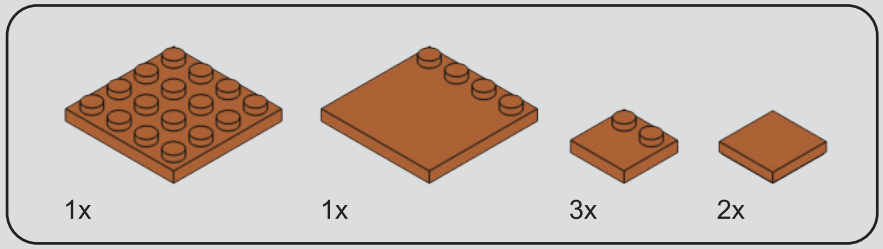

13

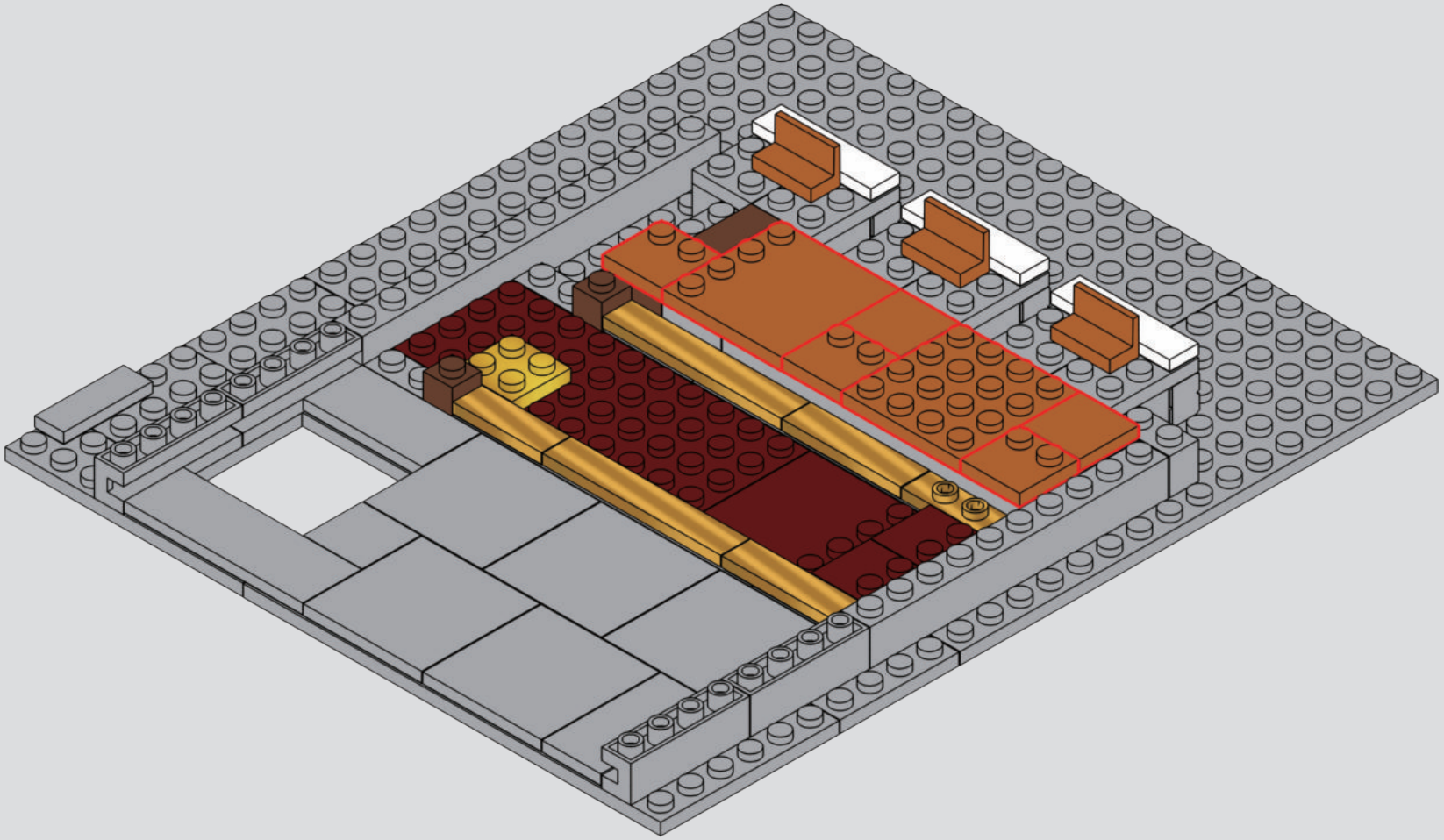

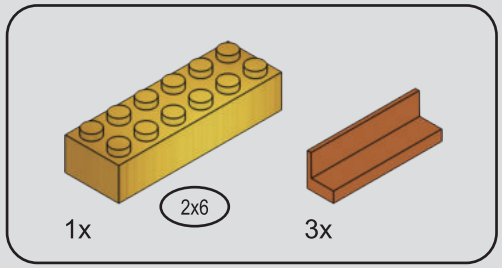

14

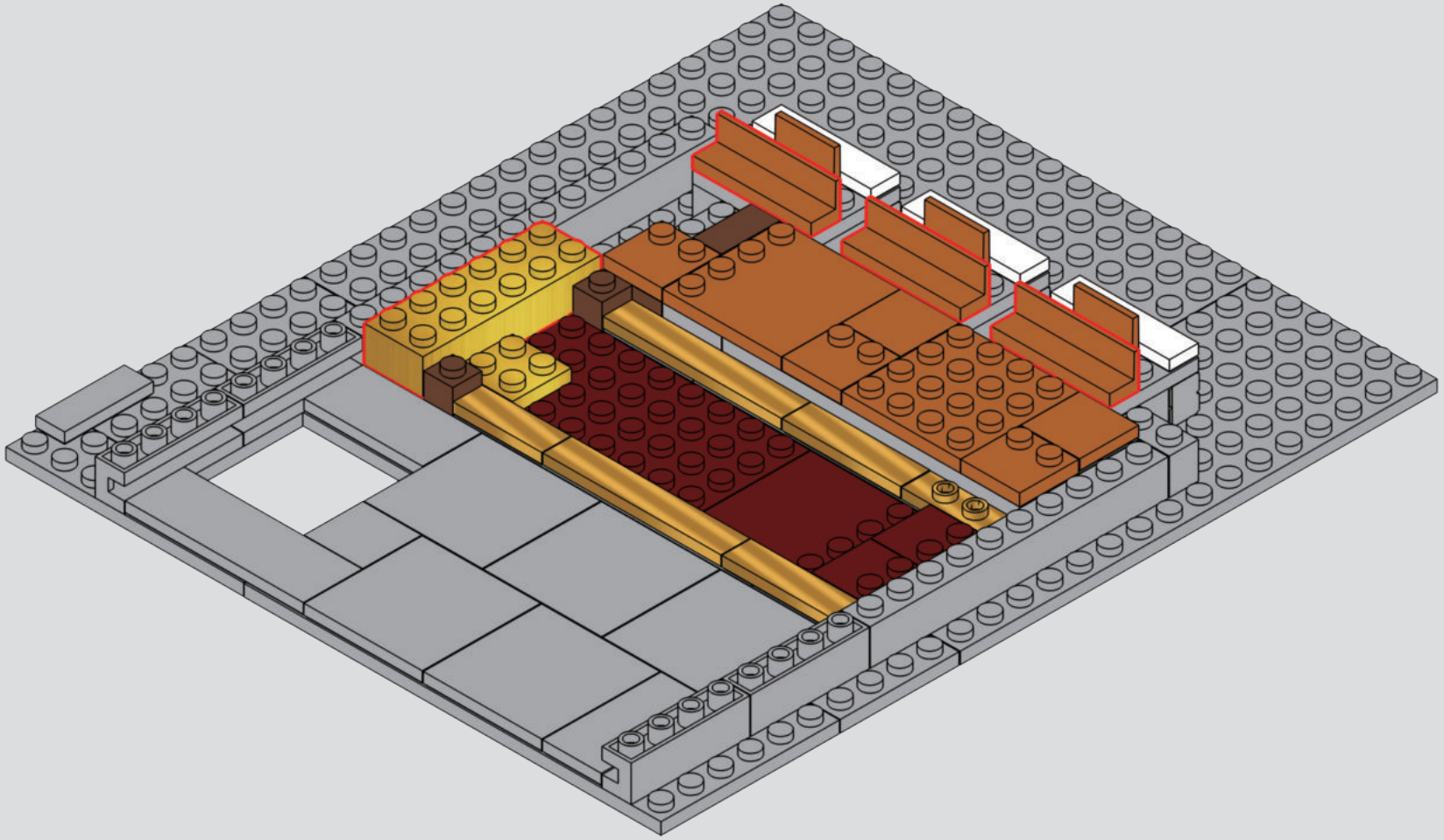

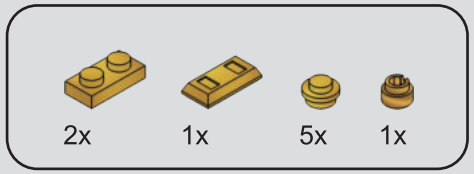

15

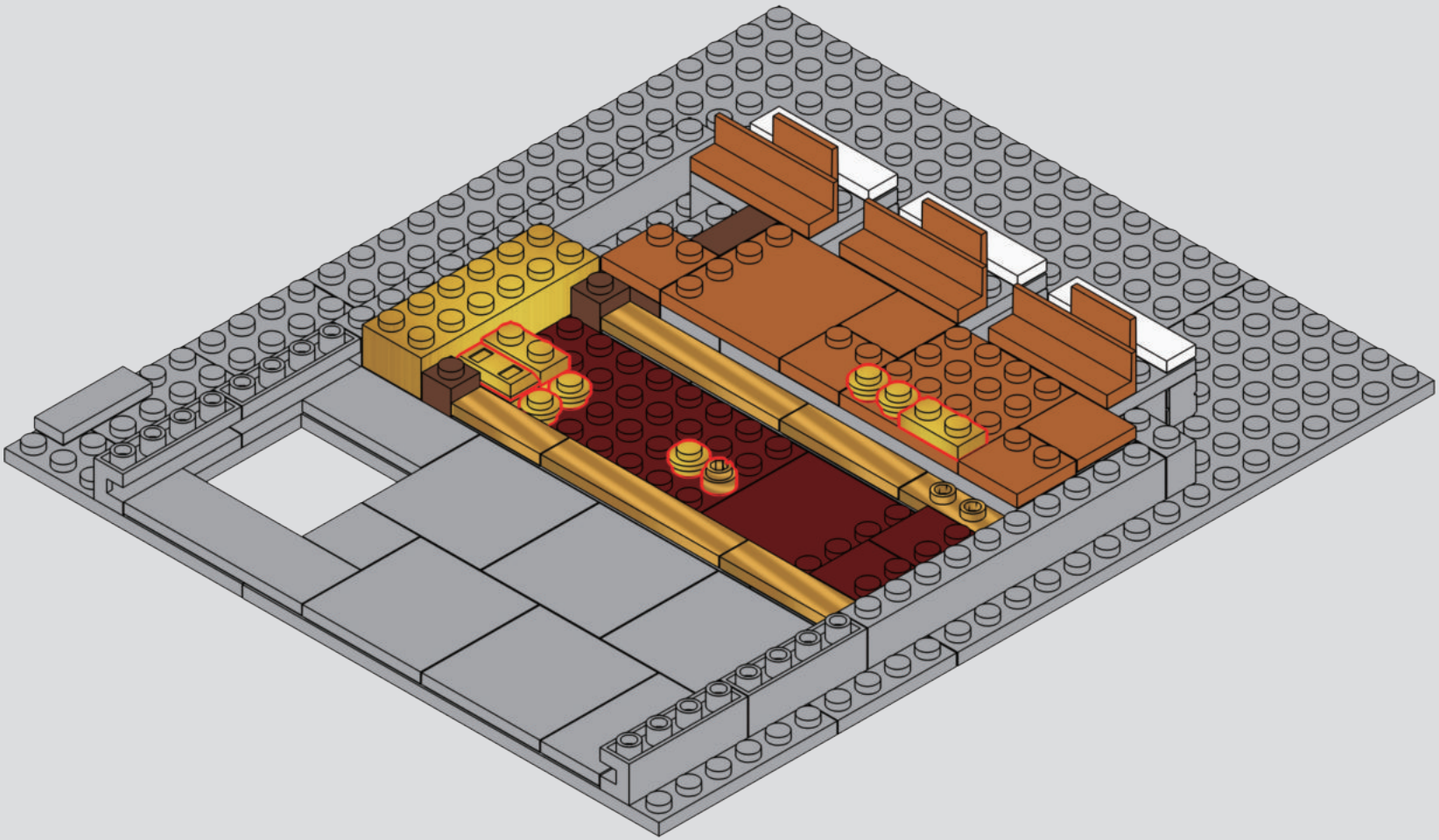

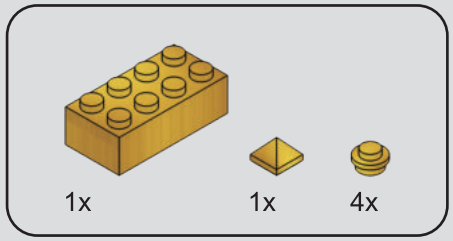

16

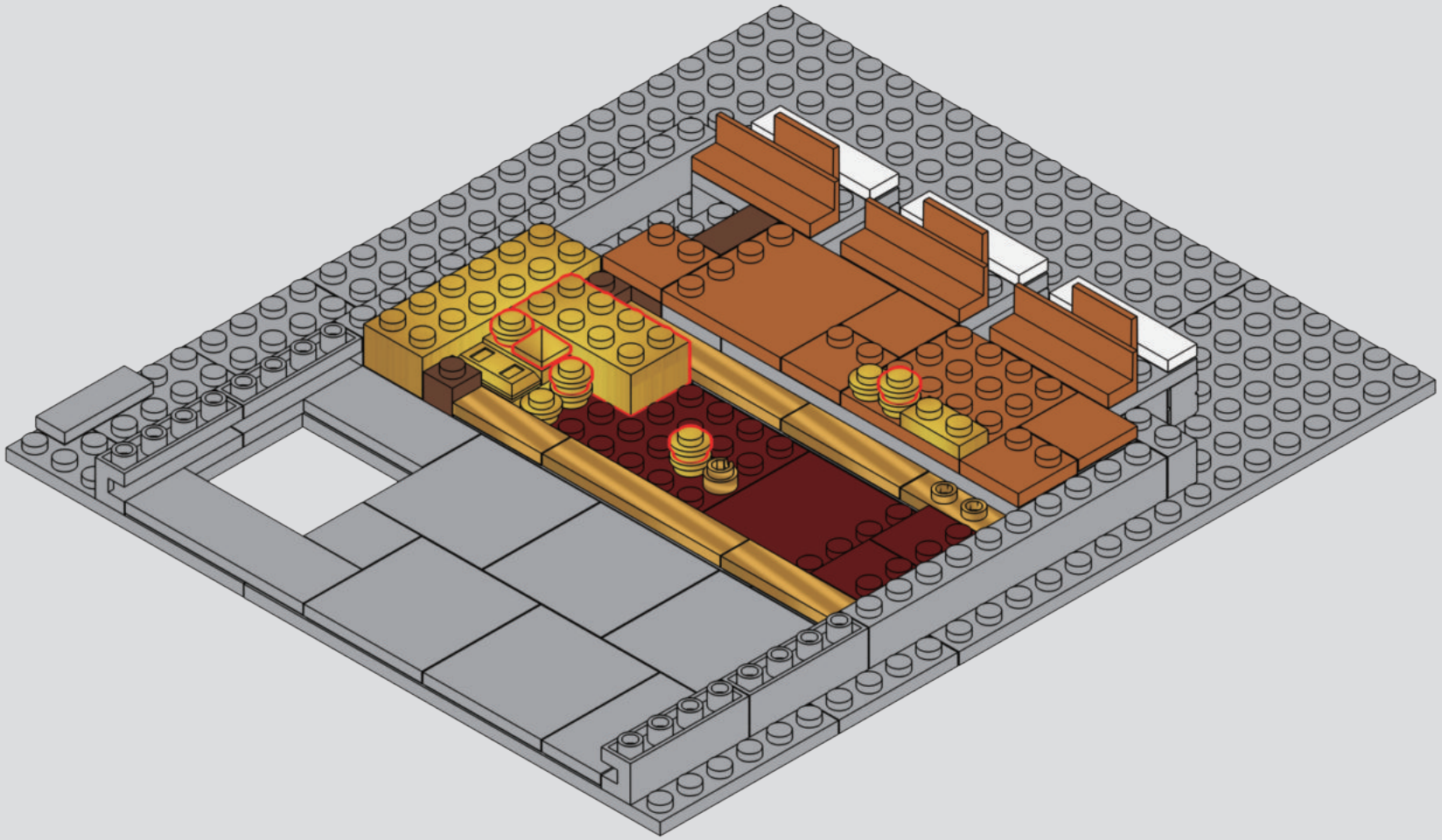

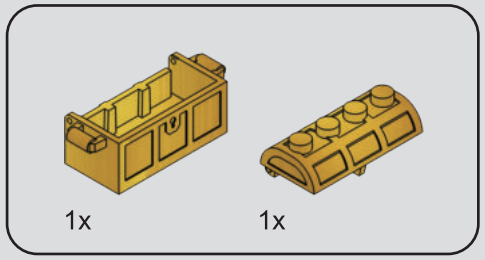

17

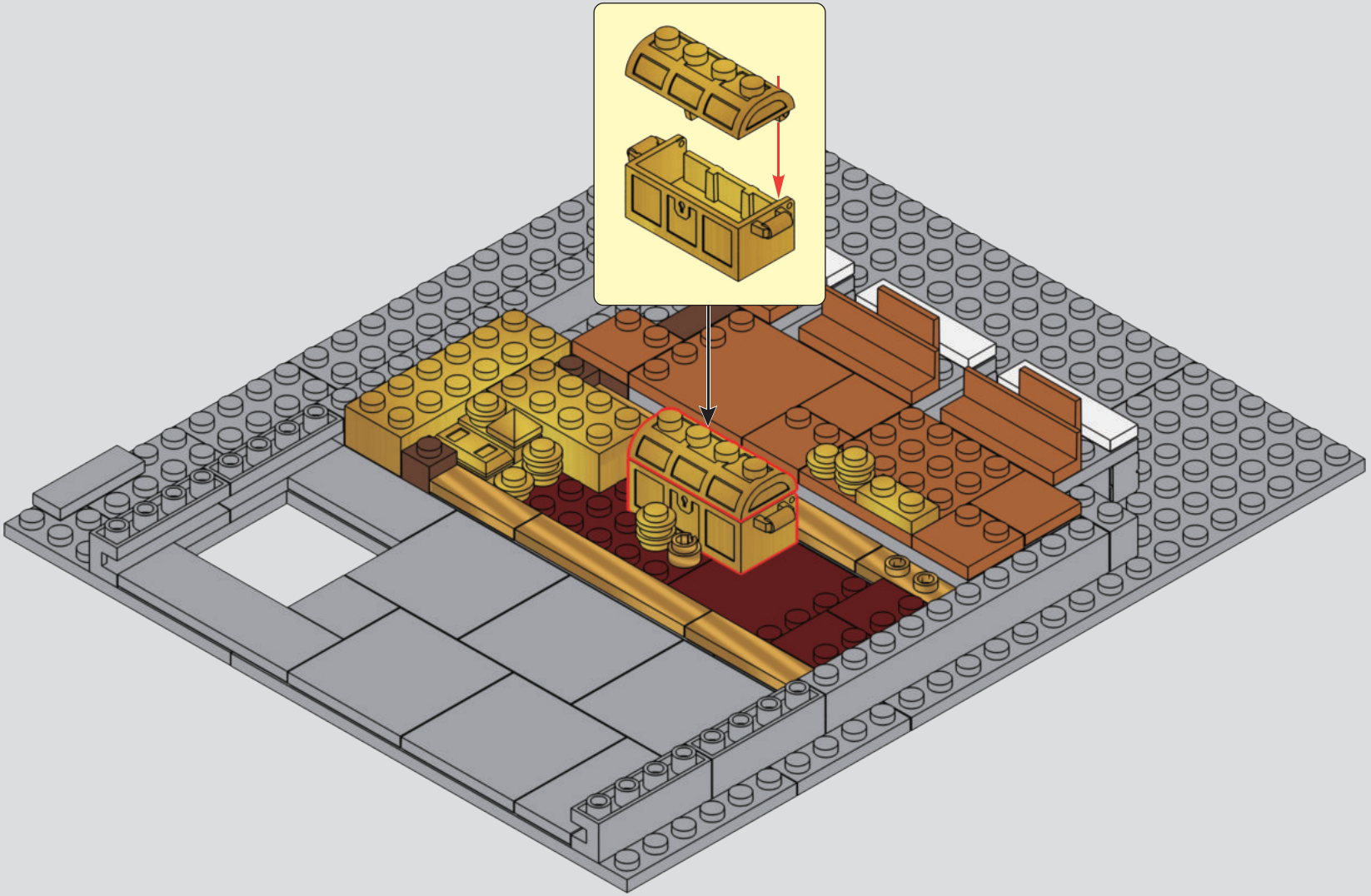

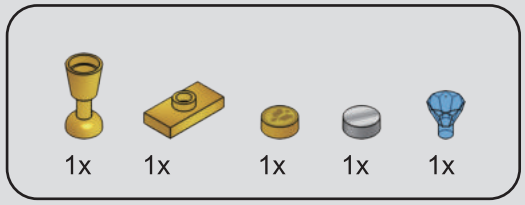

18

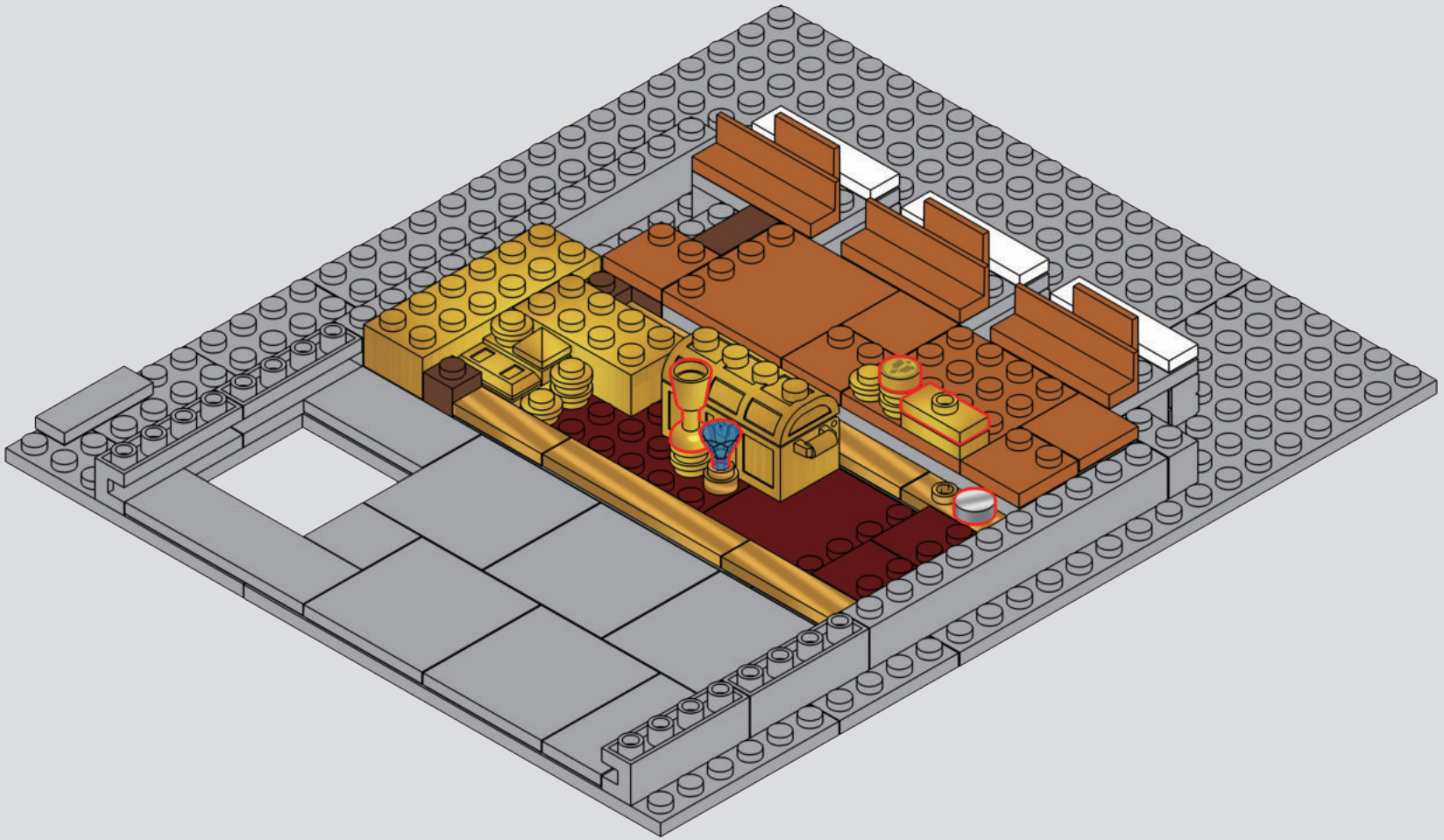

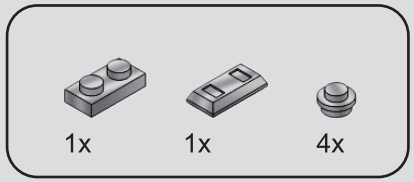

19



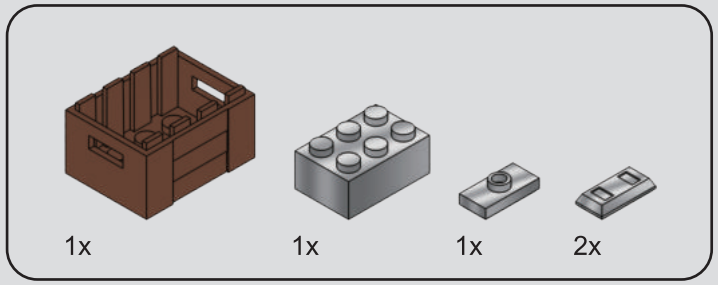

20

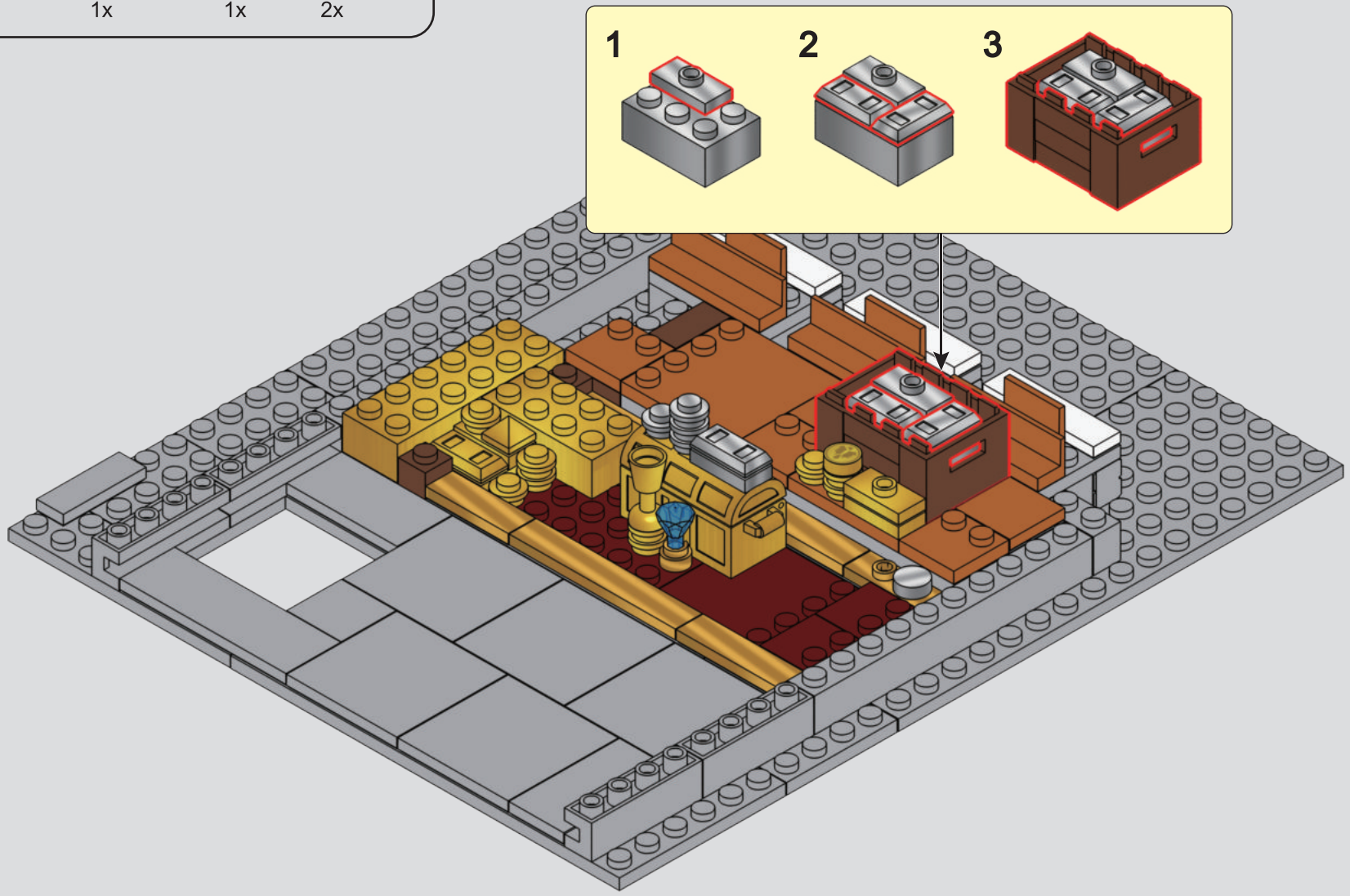

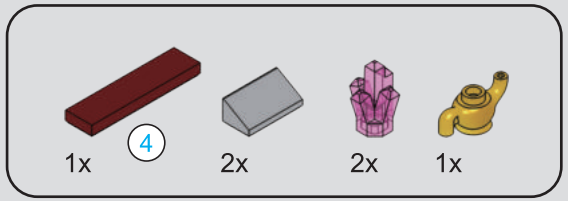



21

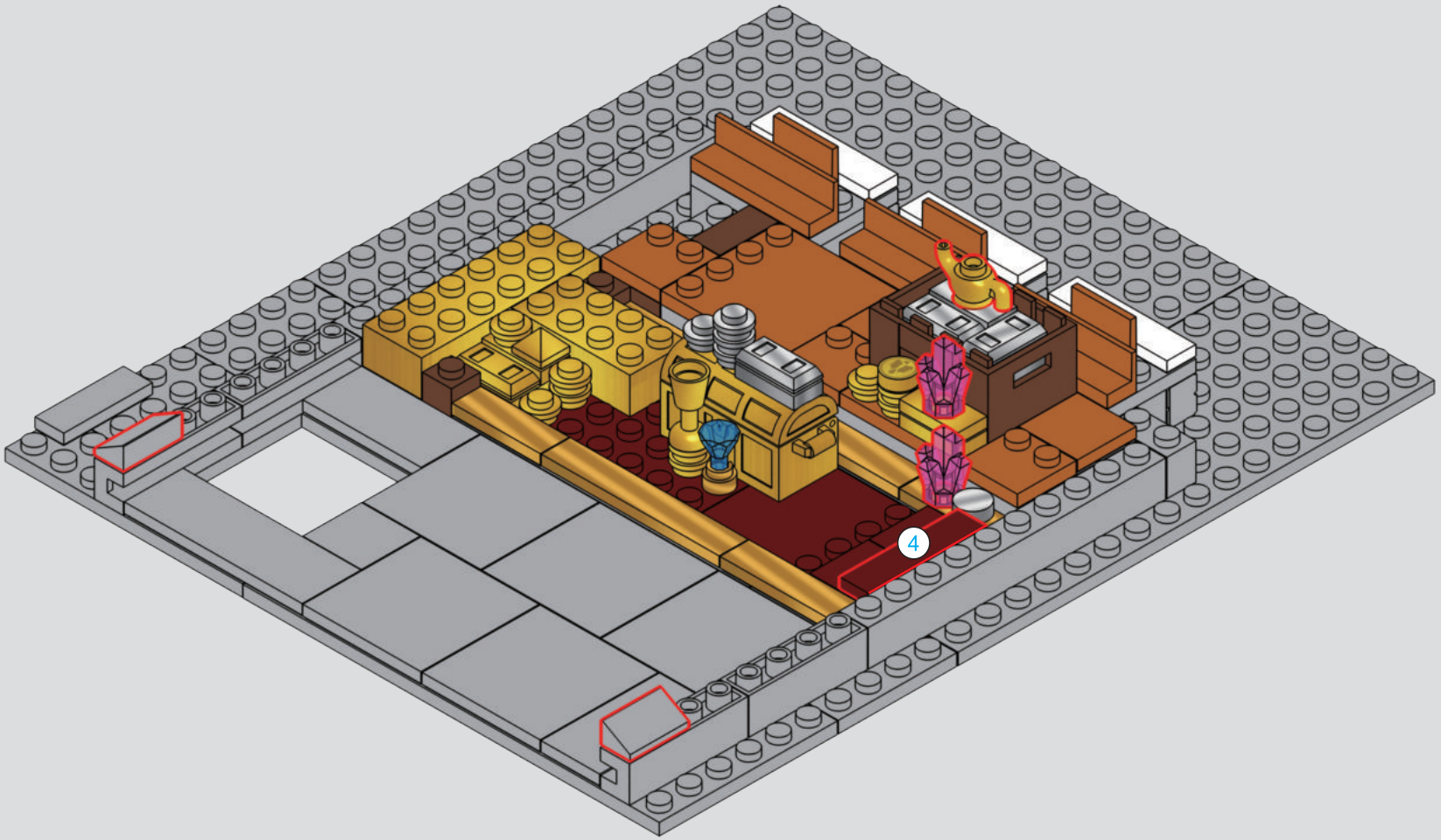

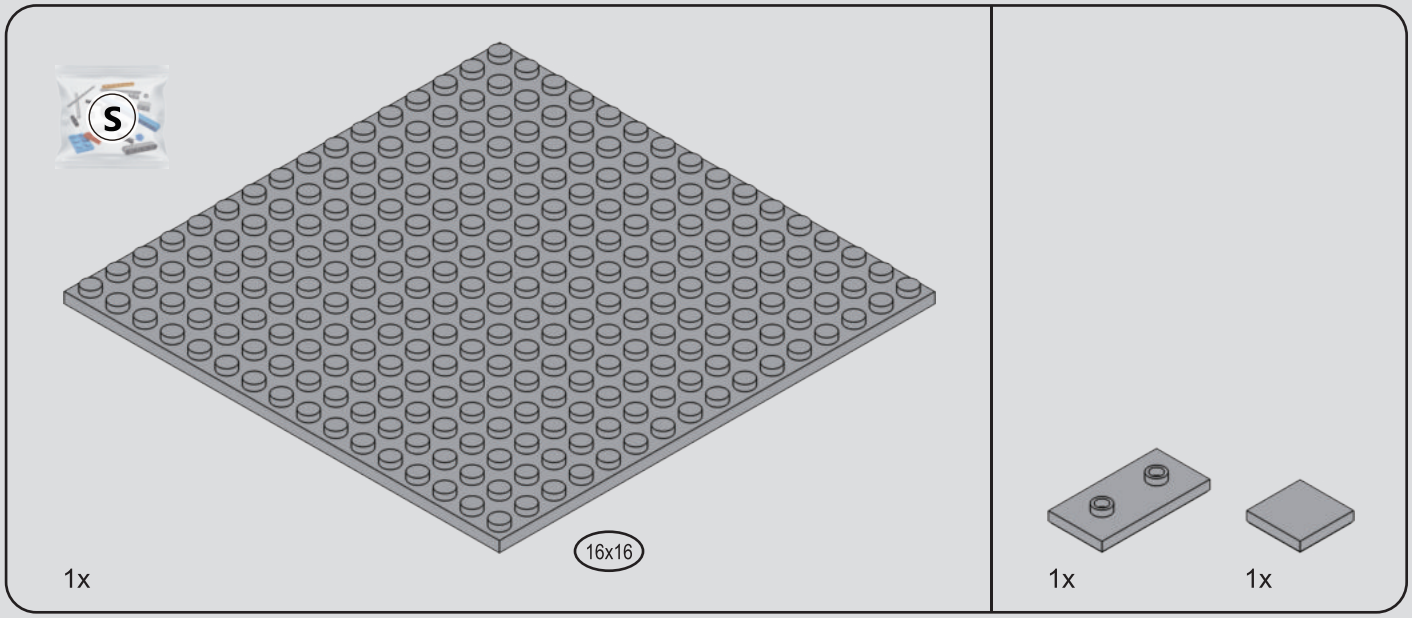

22

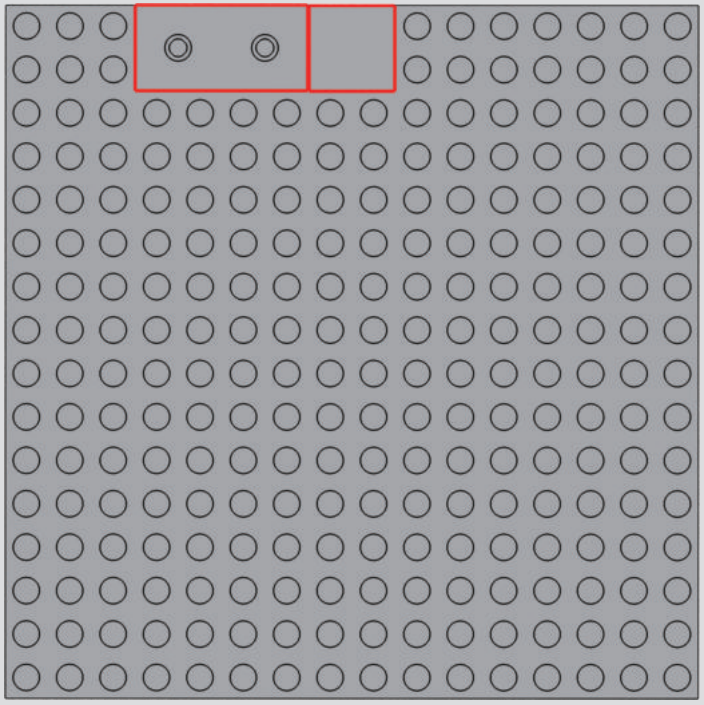

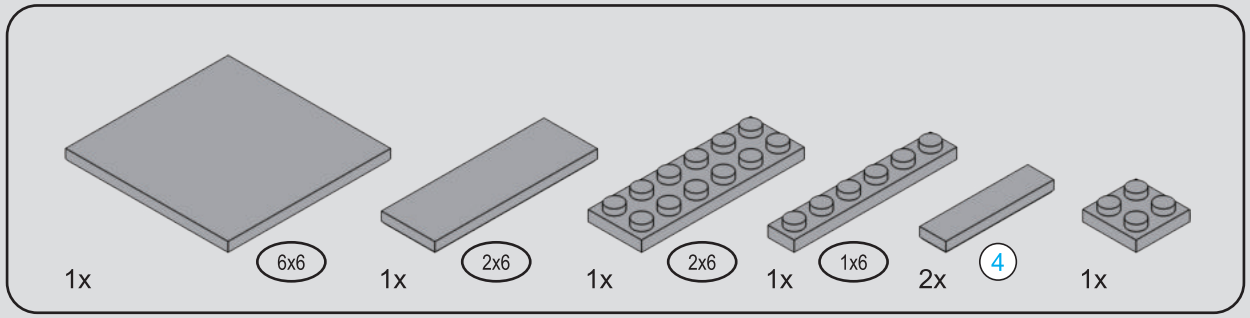



23

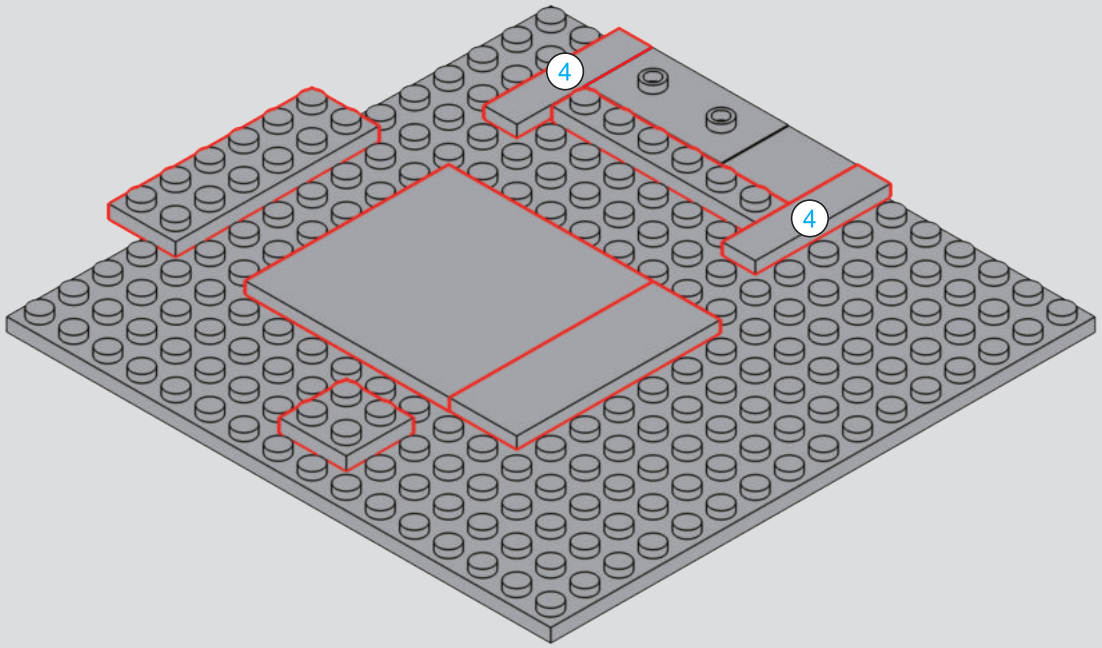

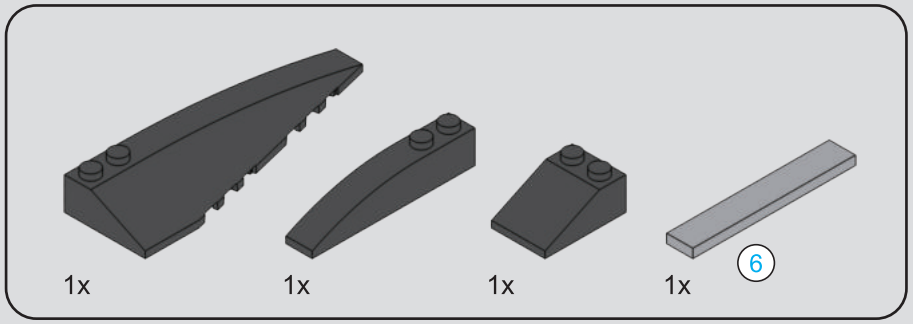

24

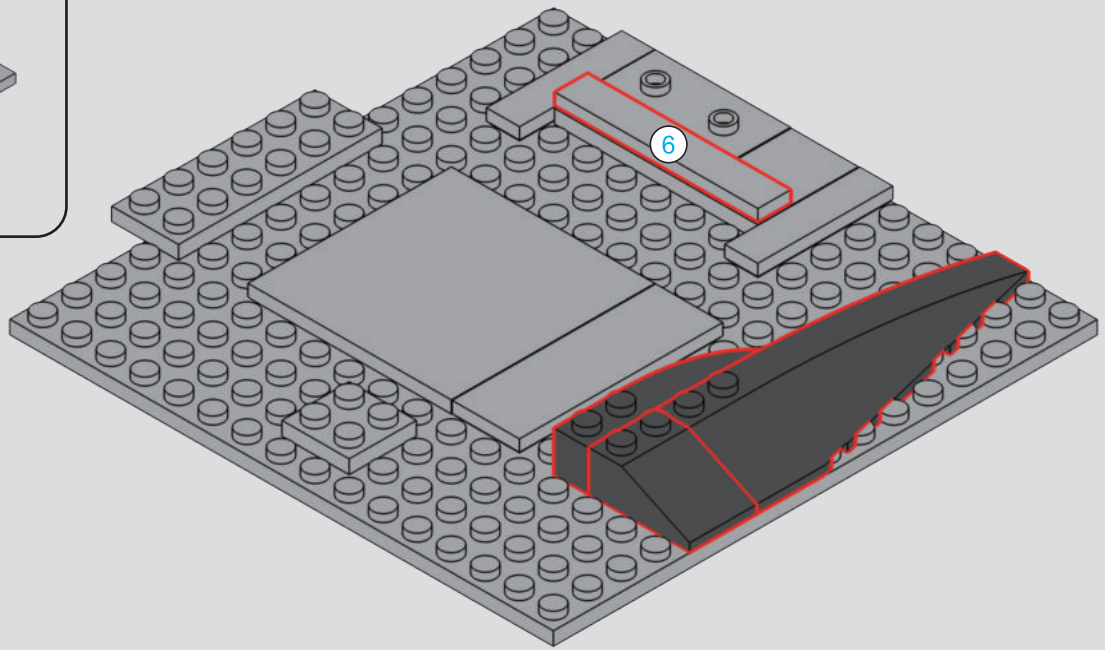



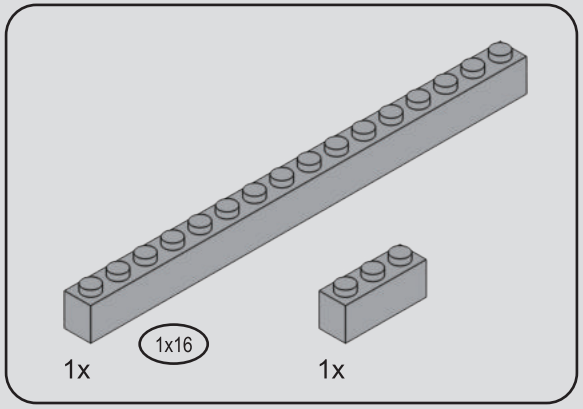

25

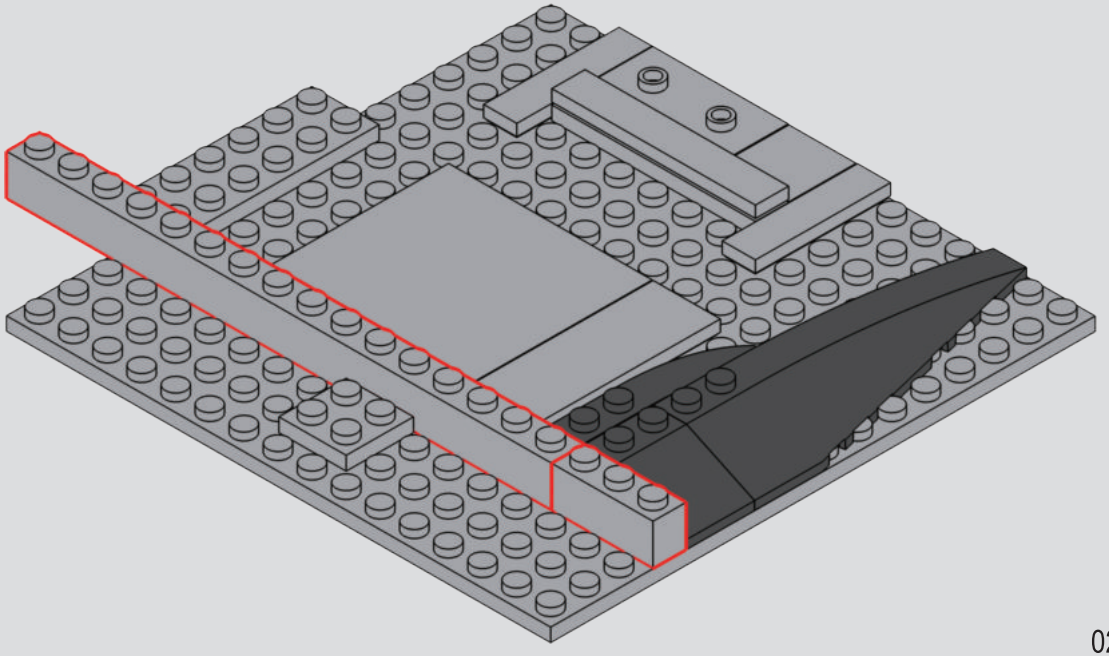

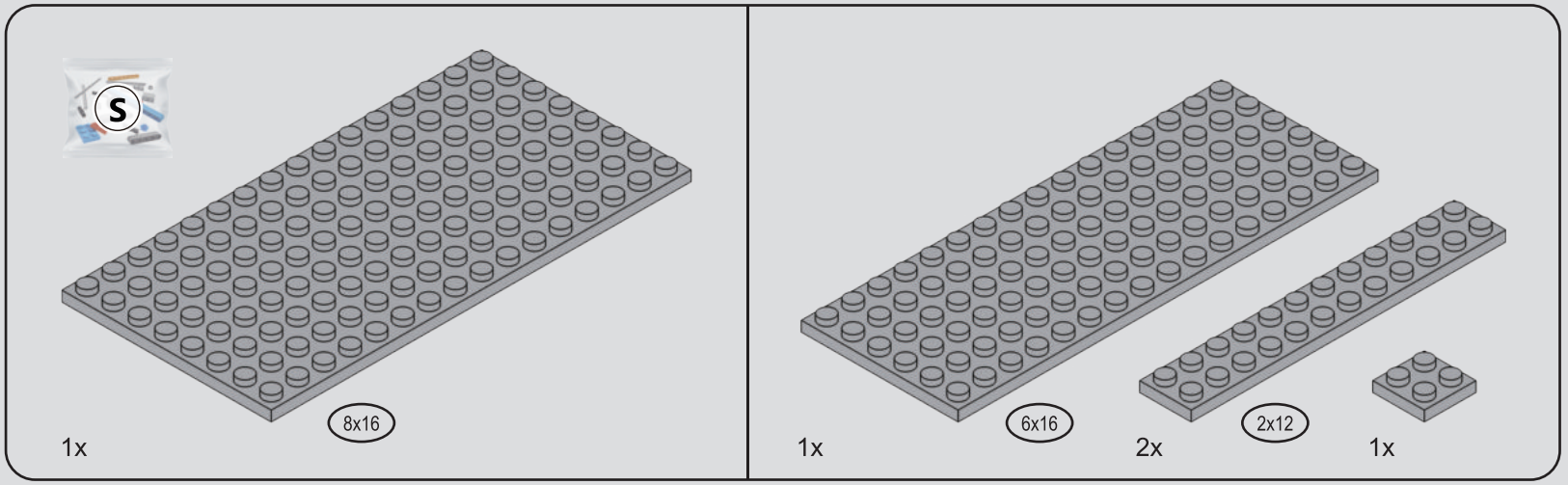

26

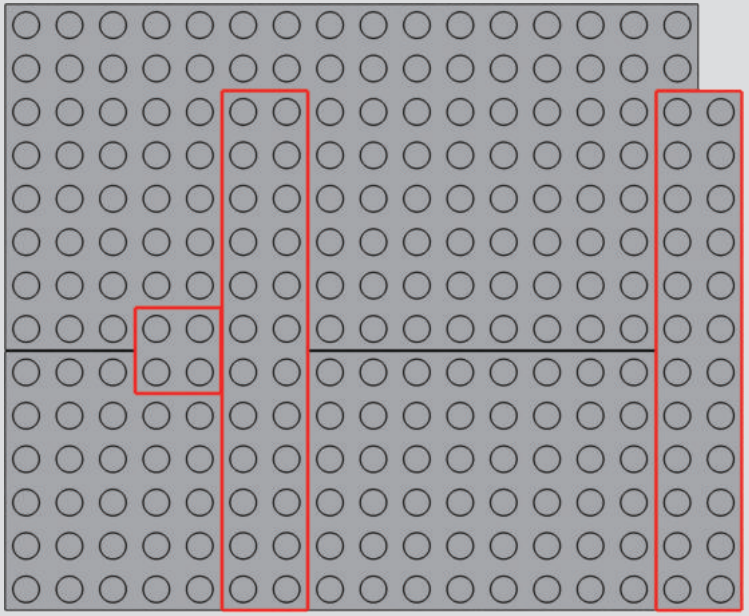

27

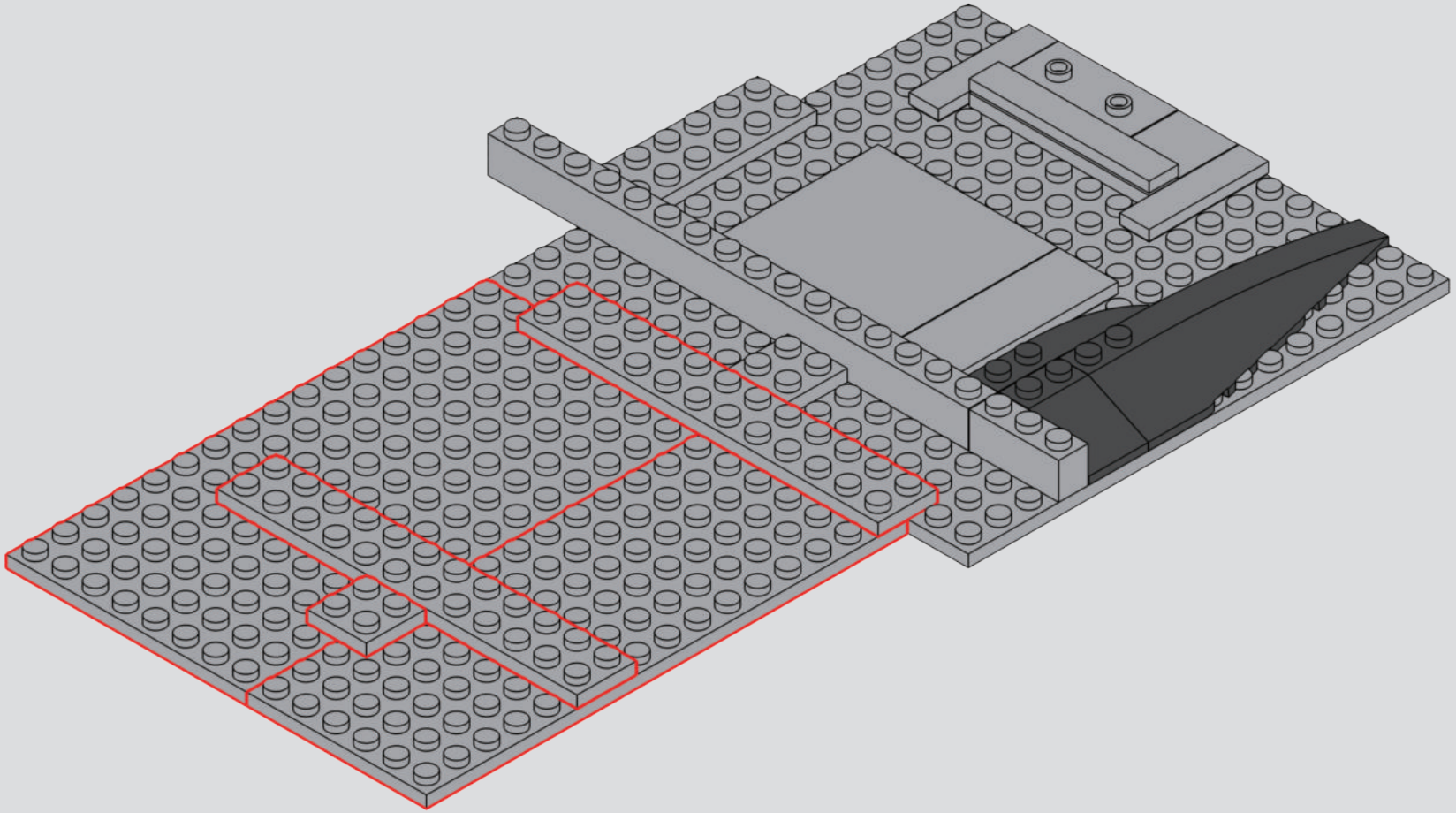

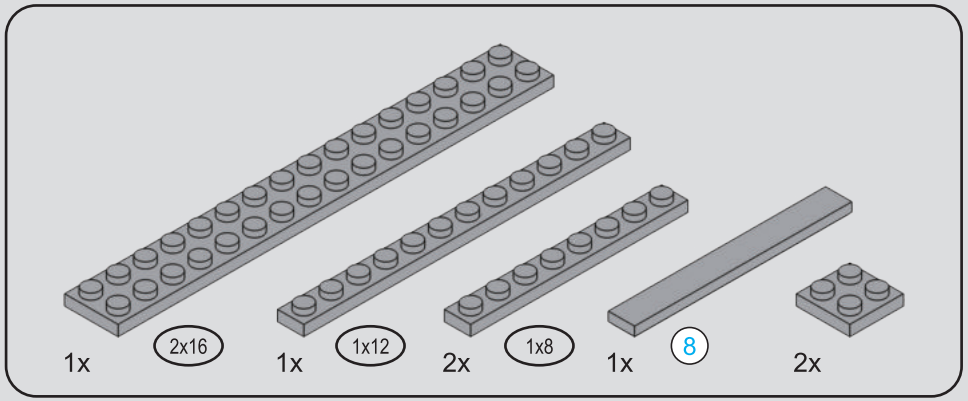



28

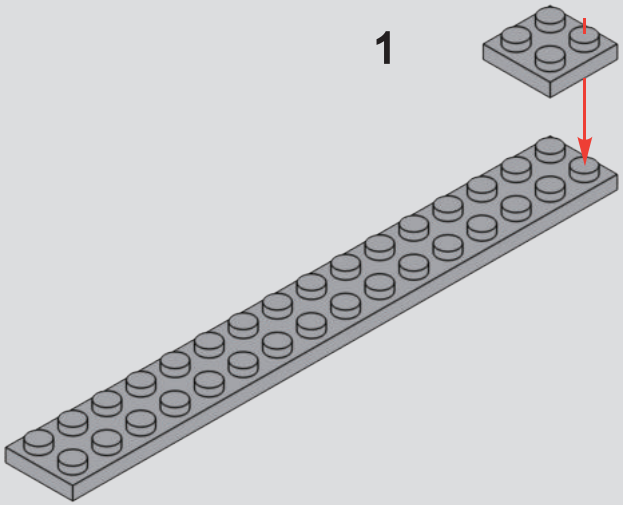

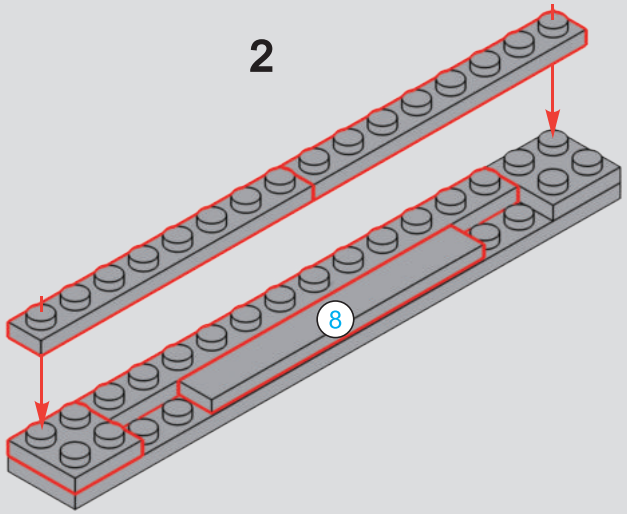

29

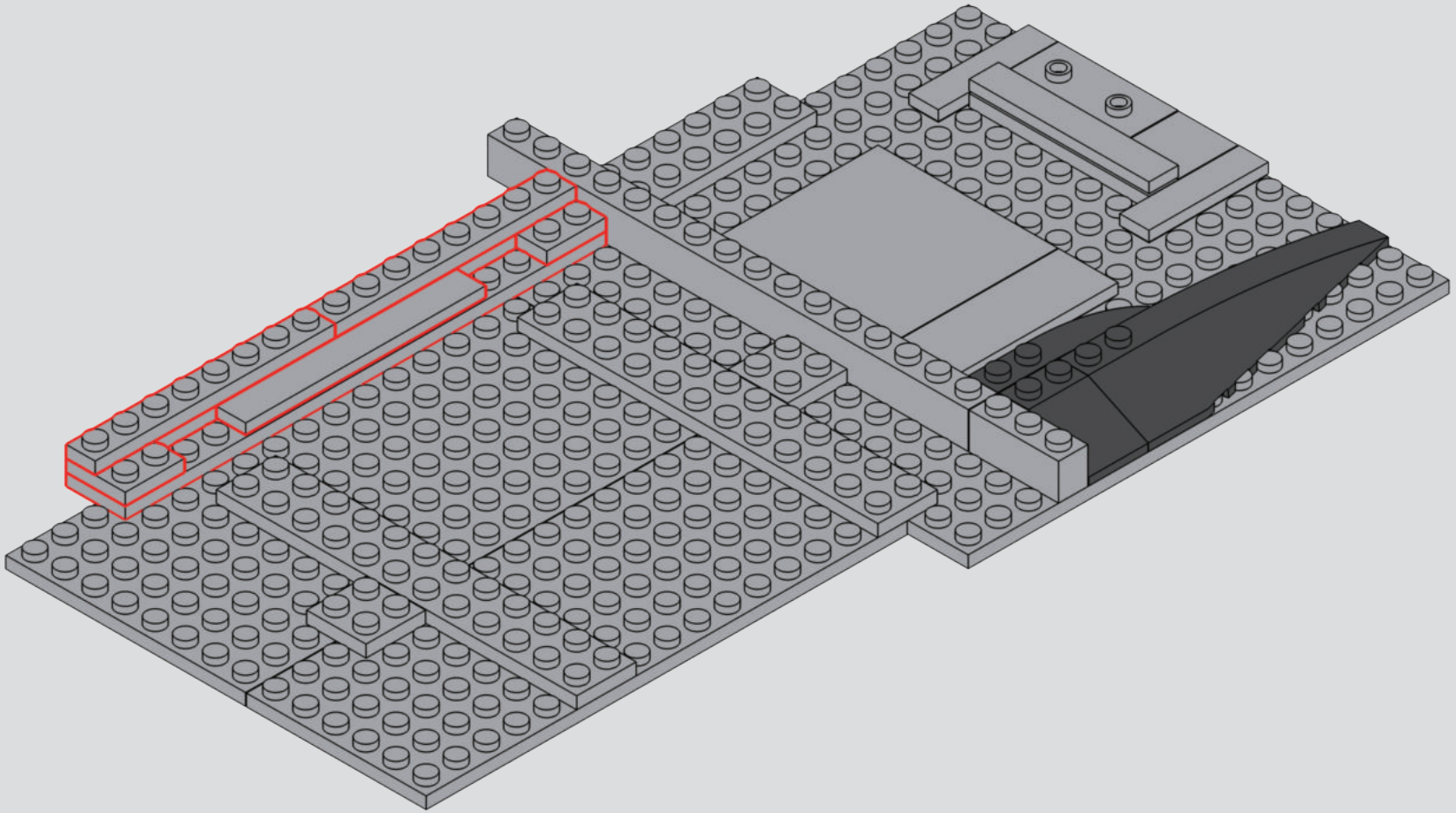

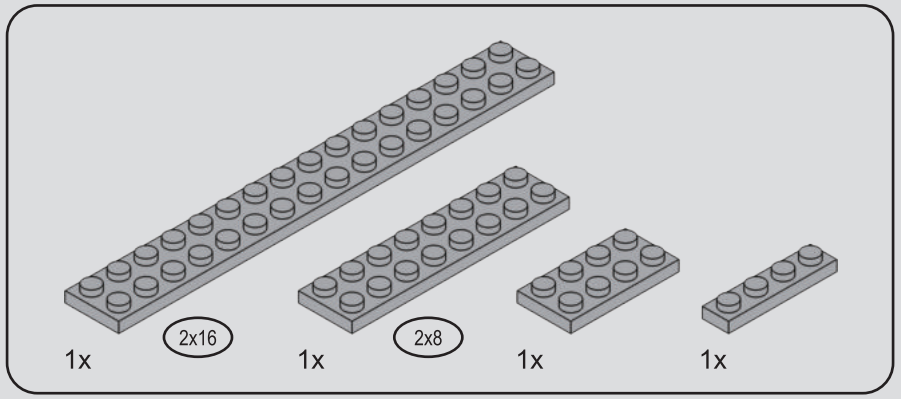

30

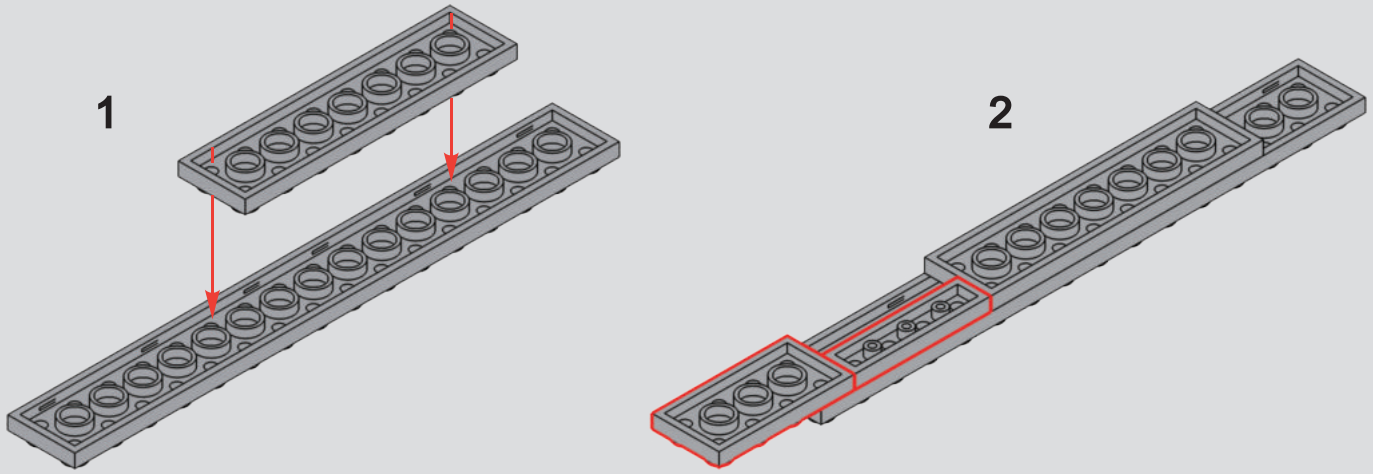

31

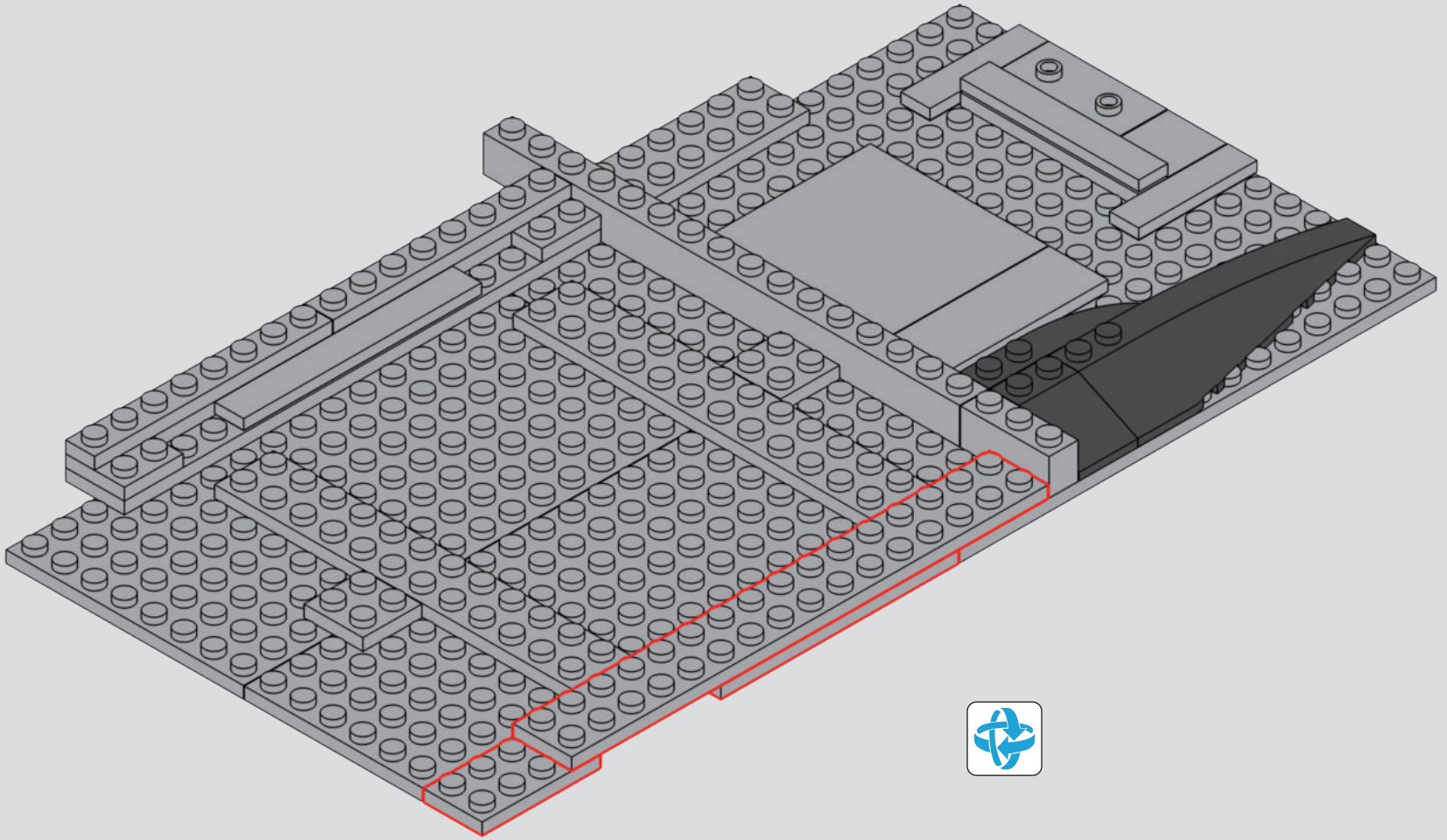

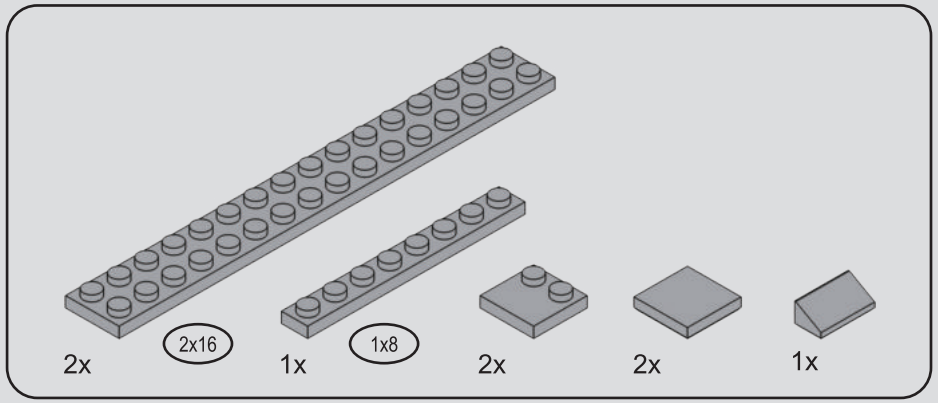

32

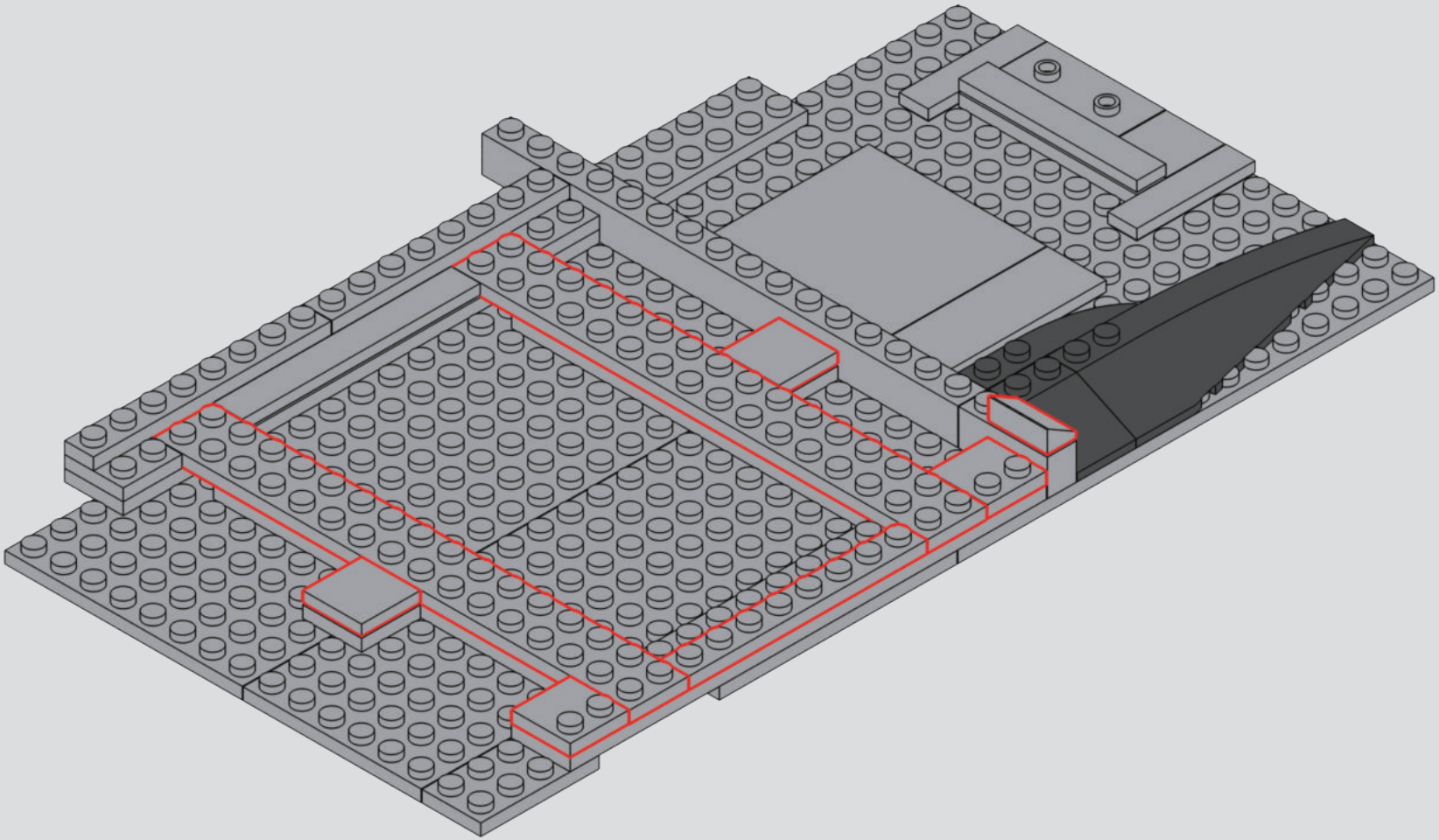

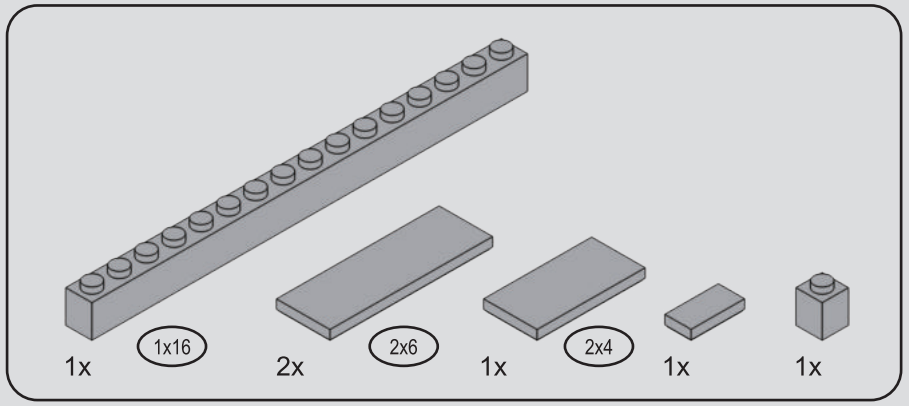

33

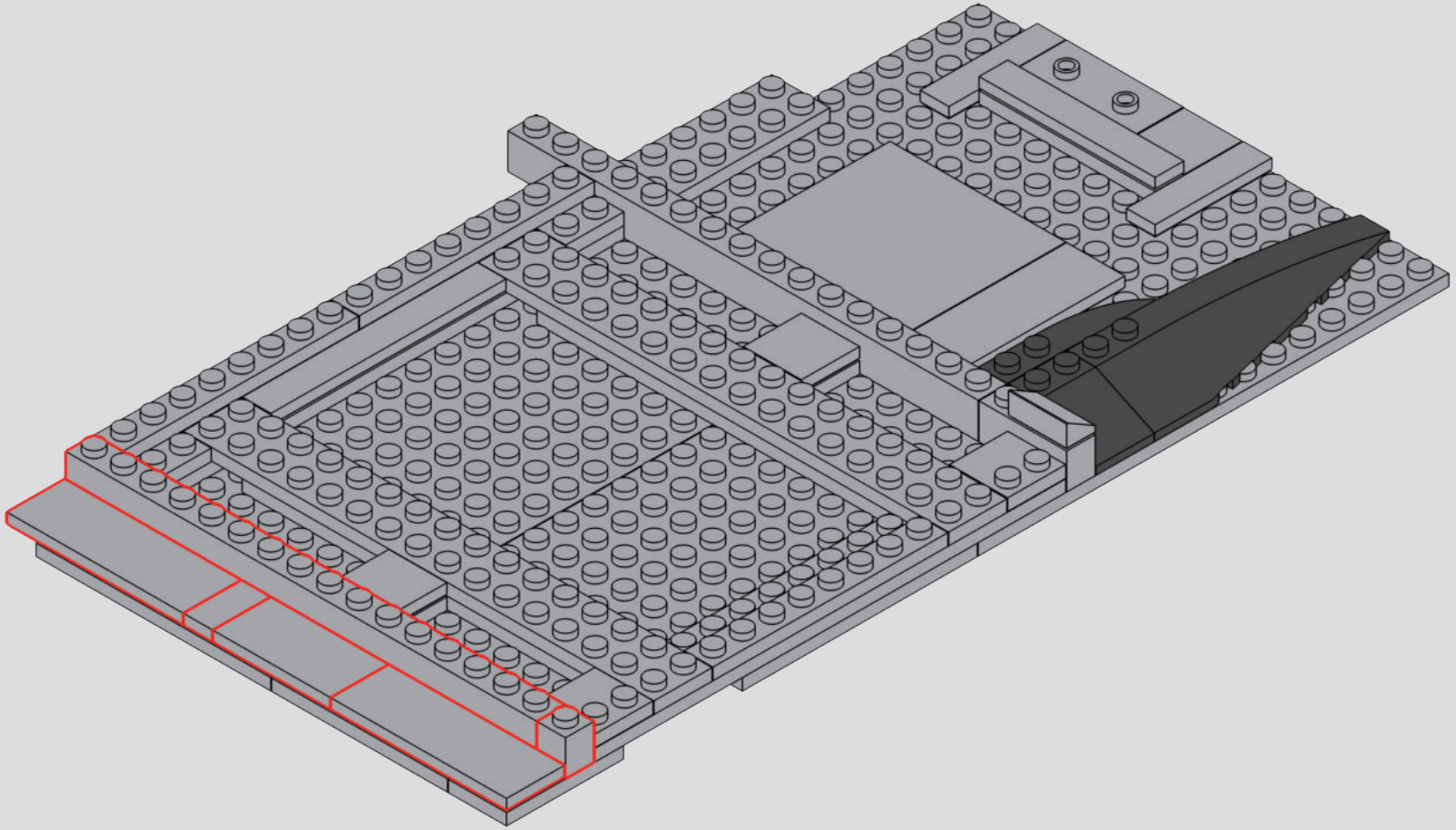

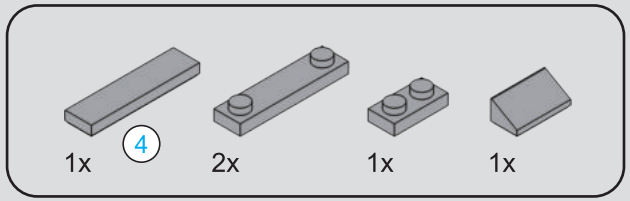



34

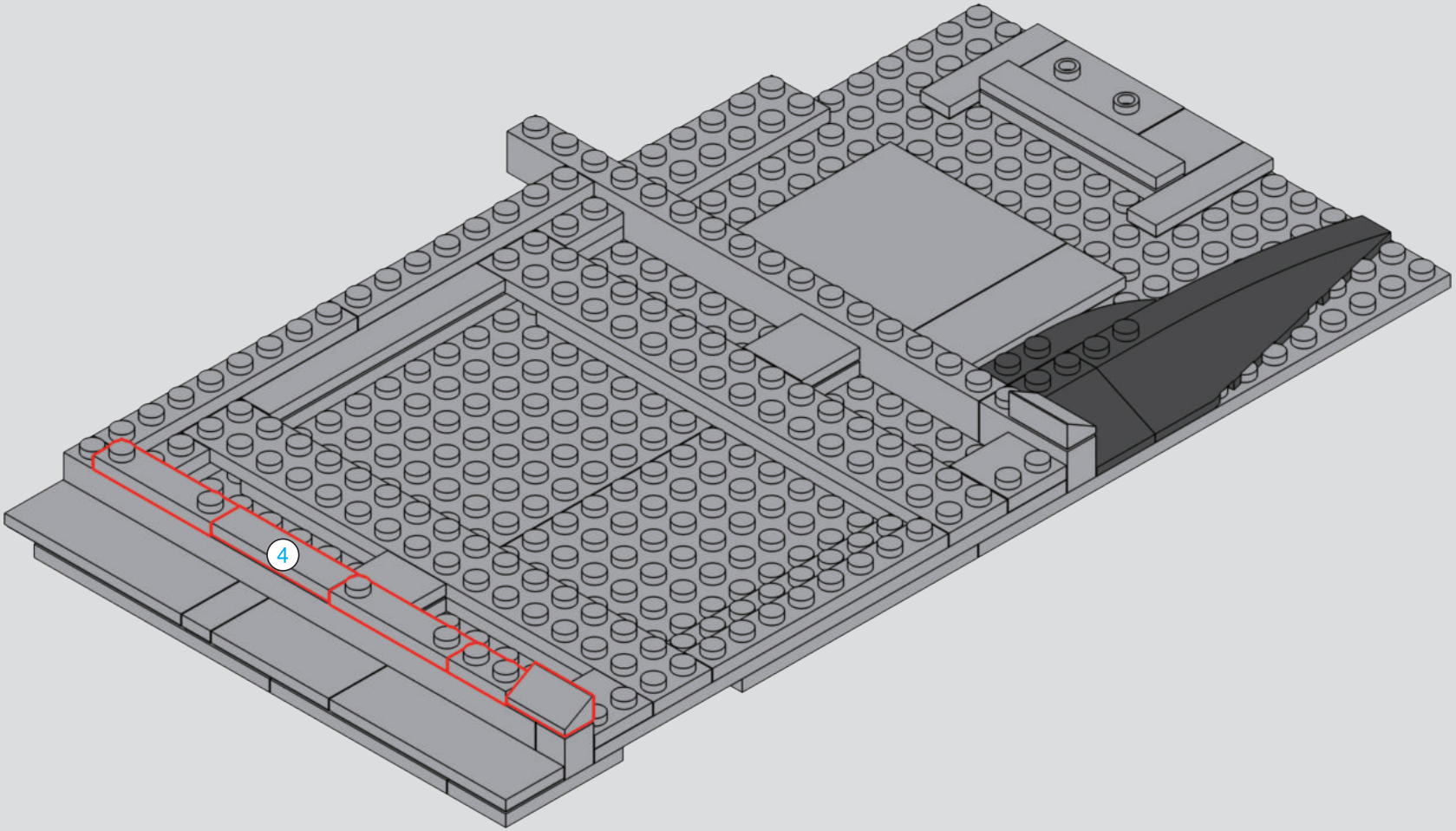

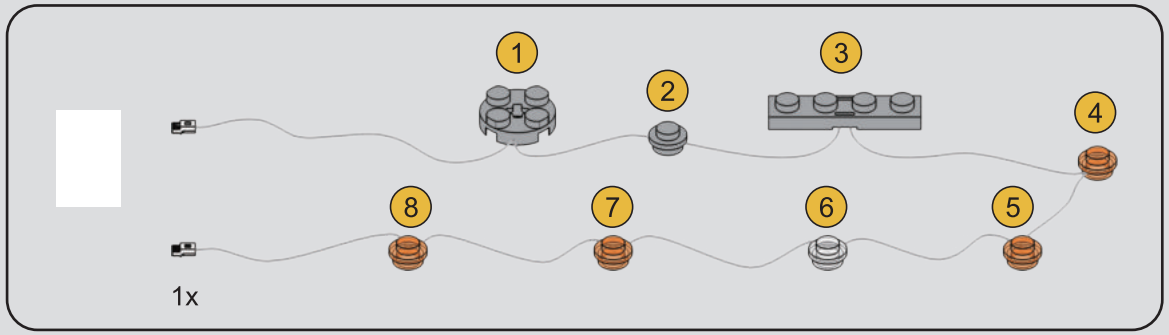

35

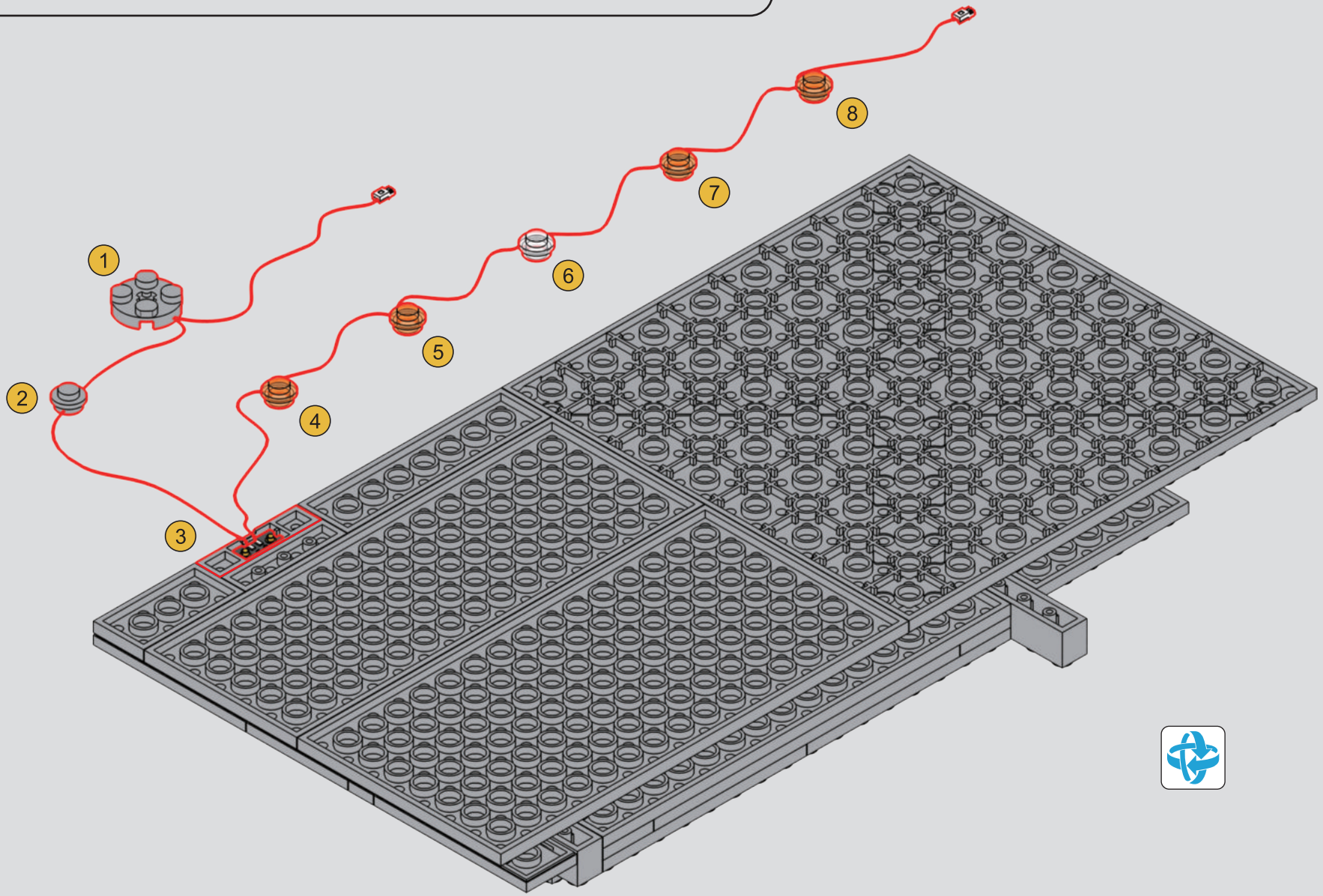

36

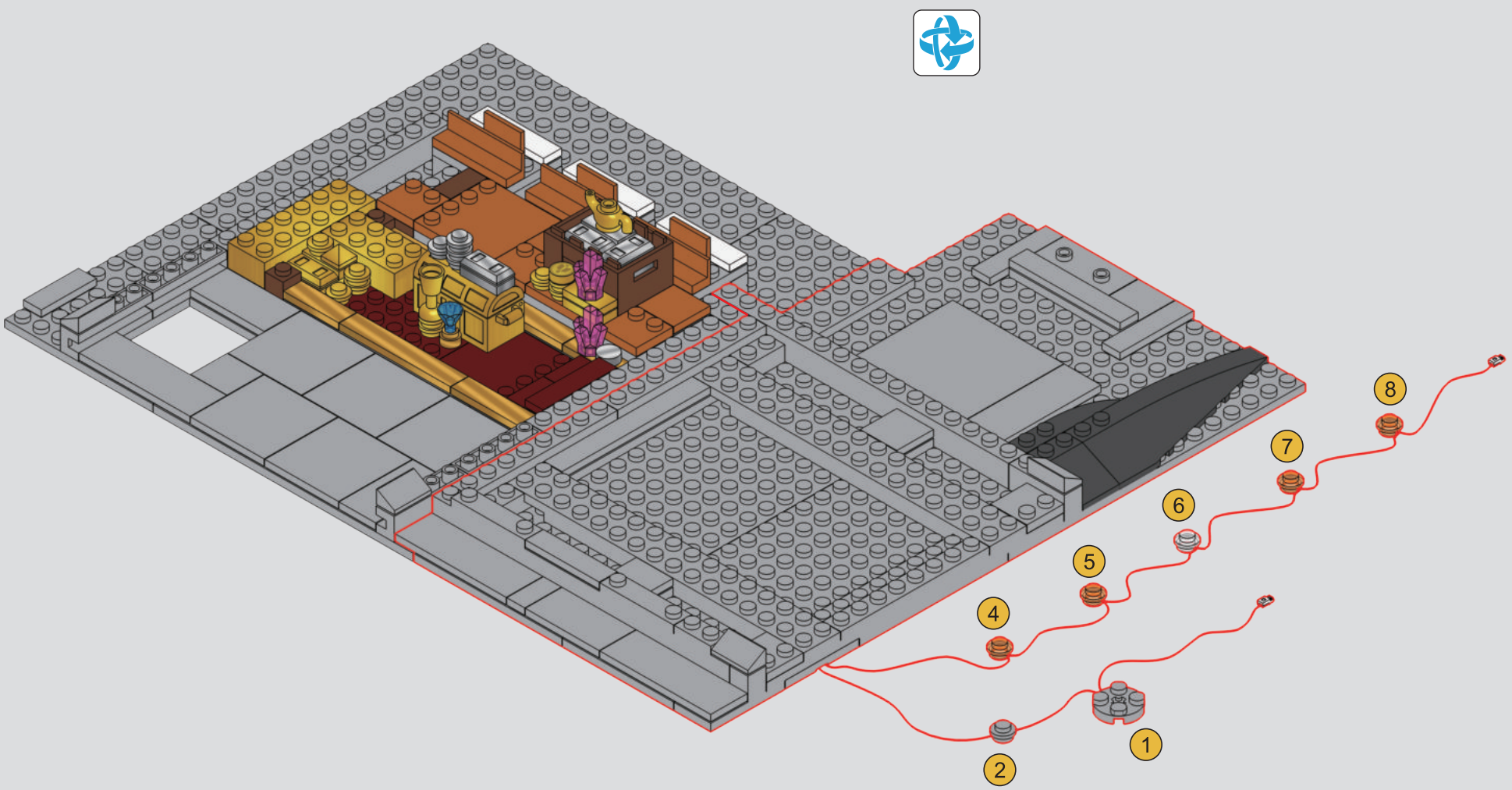

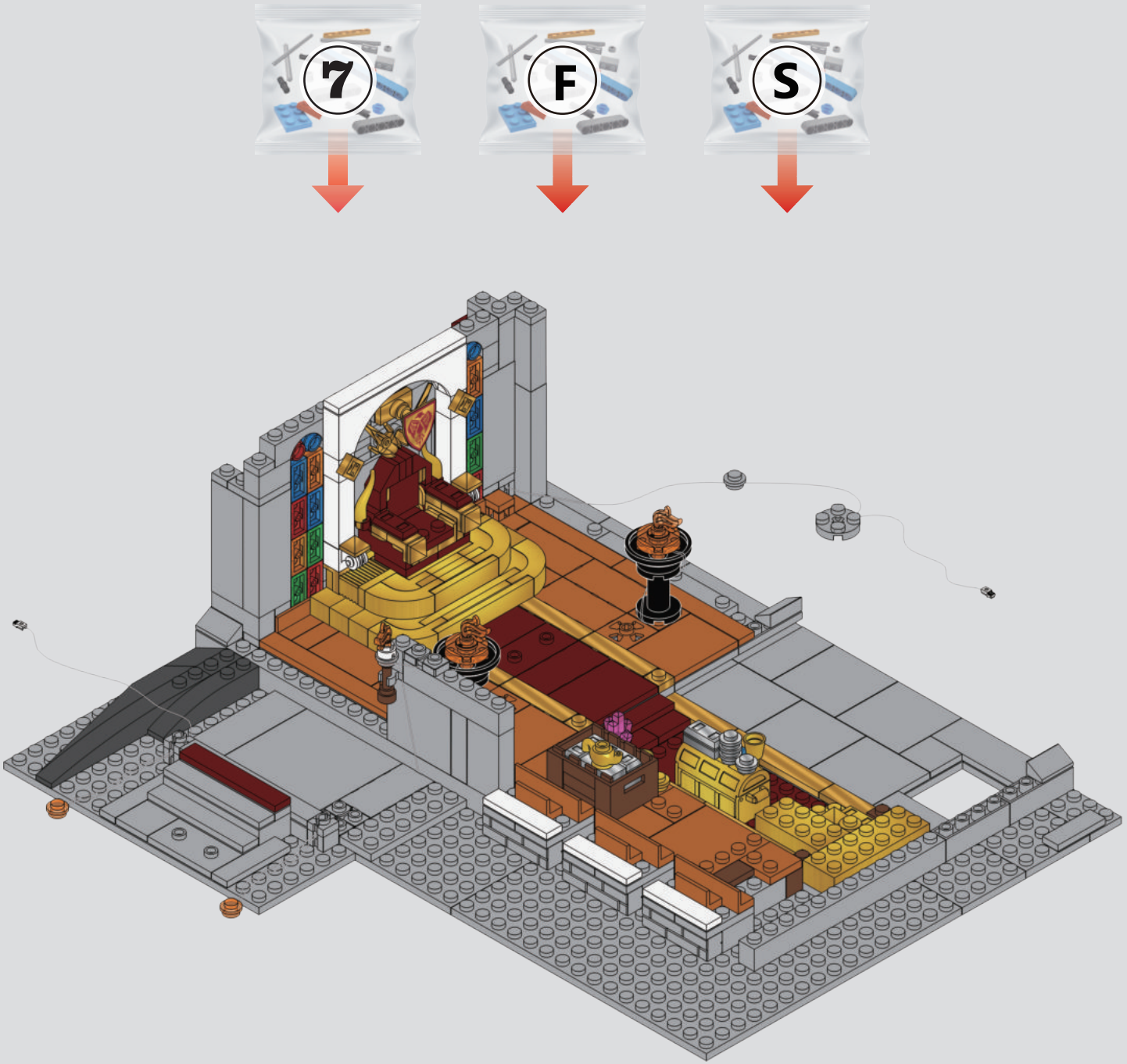
7
F
S

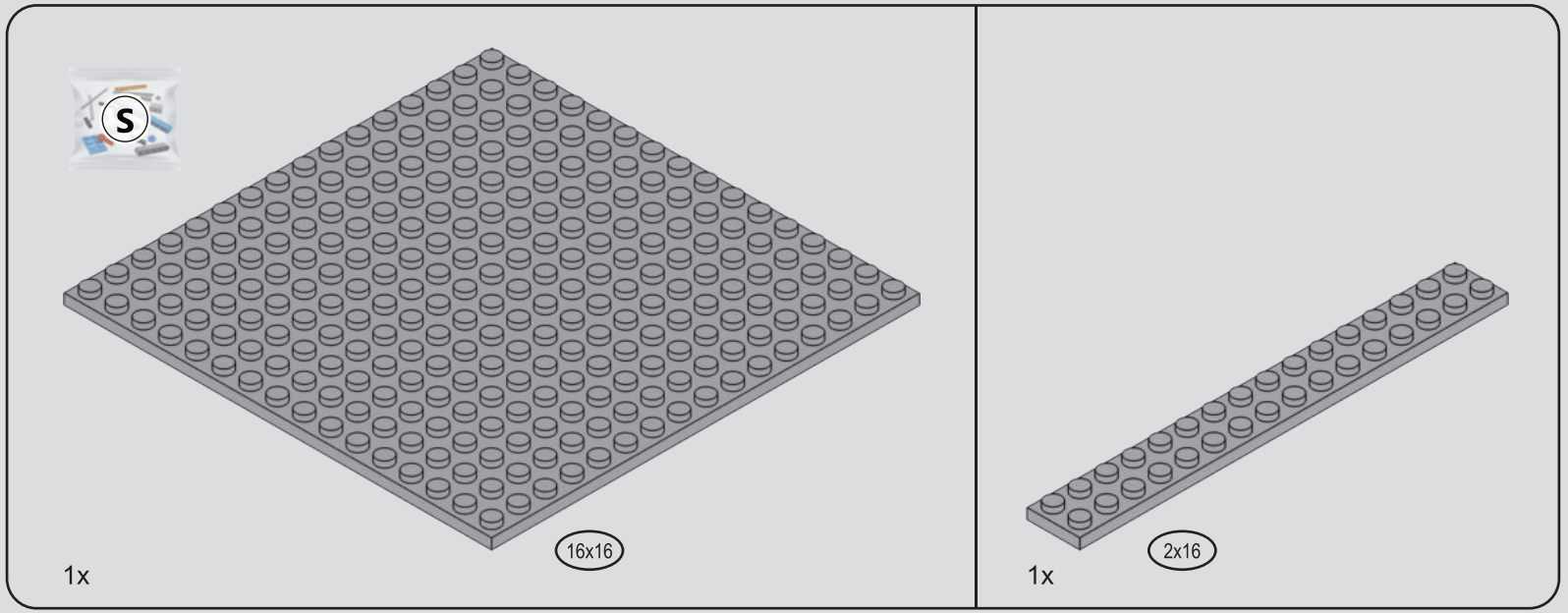

37

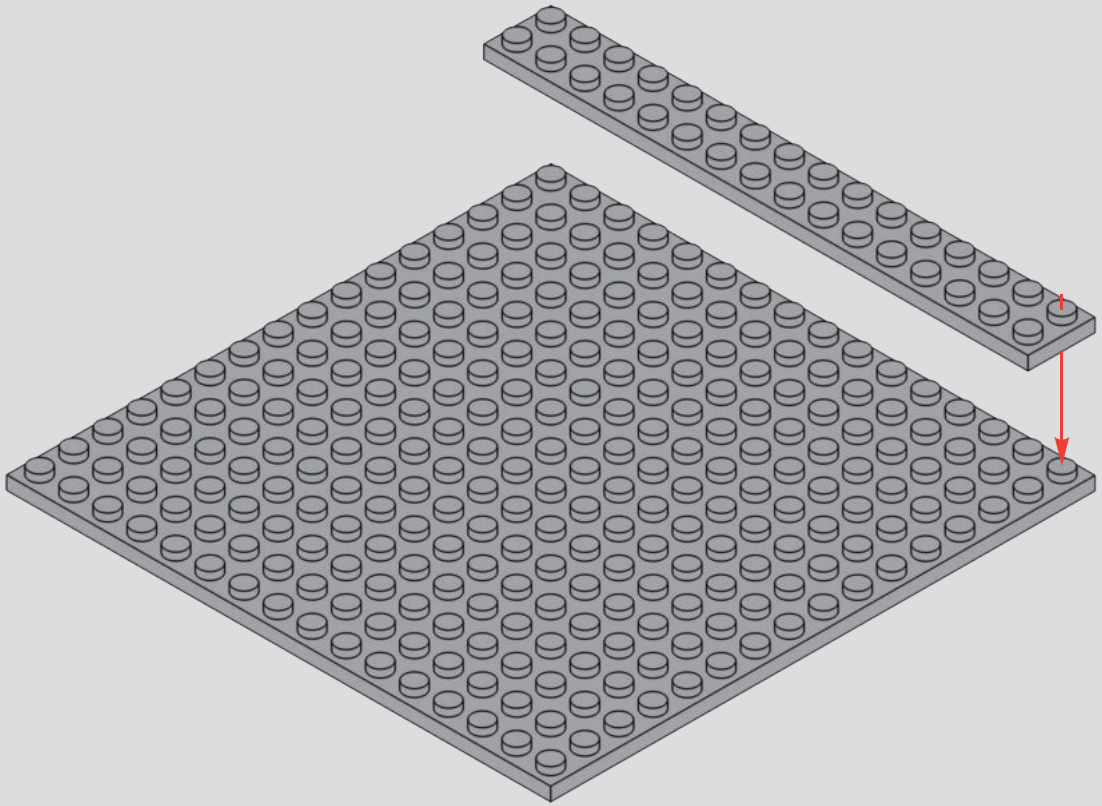

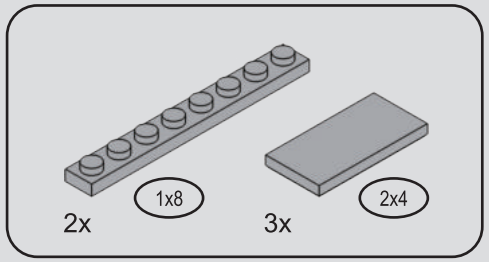

38

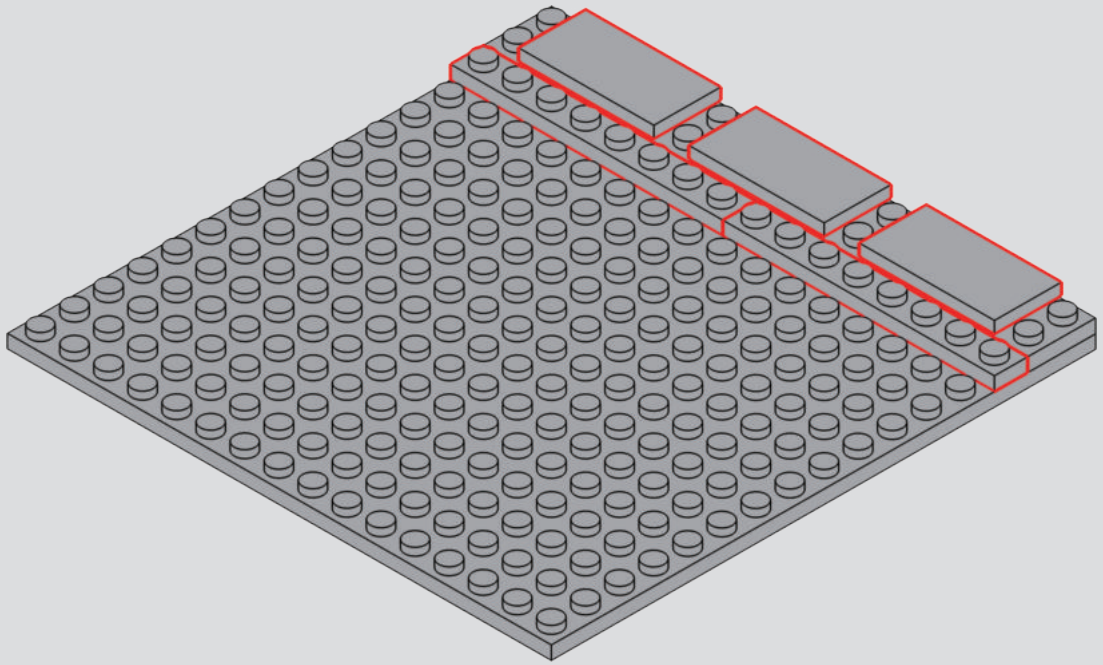

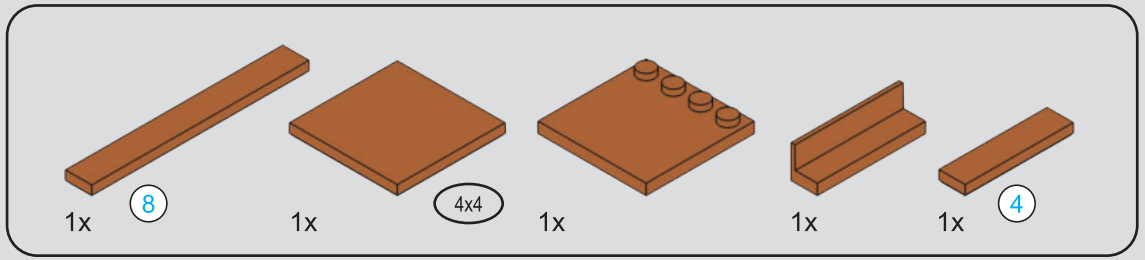



39

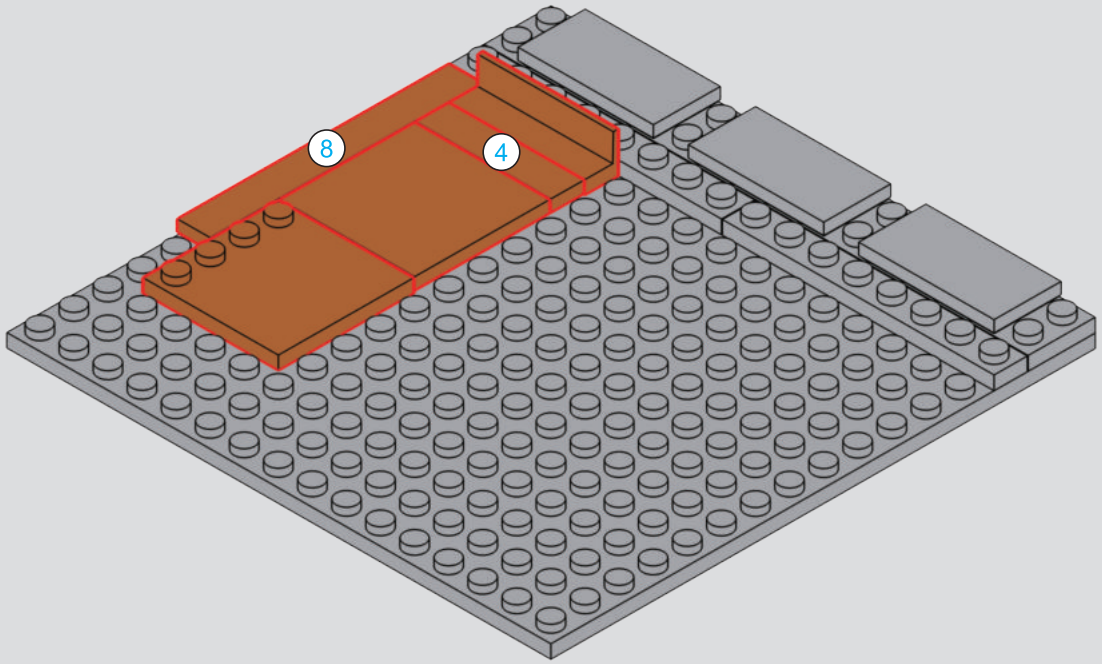

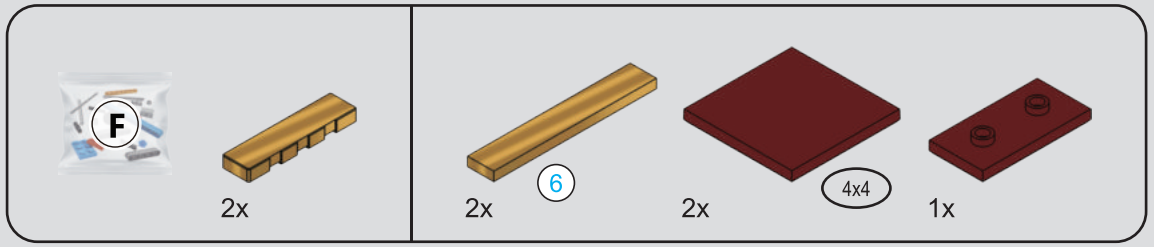

40

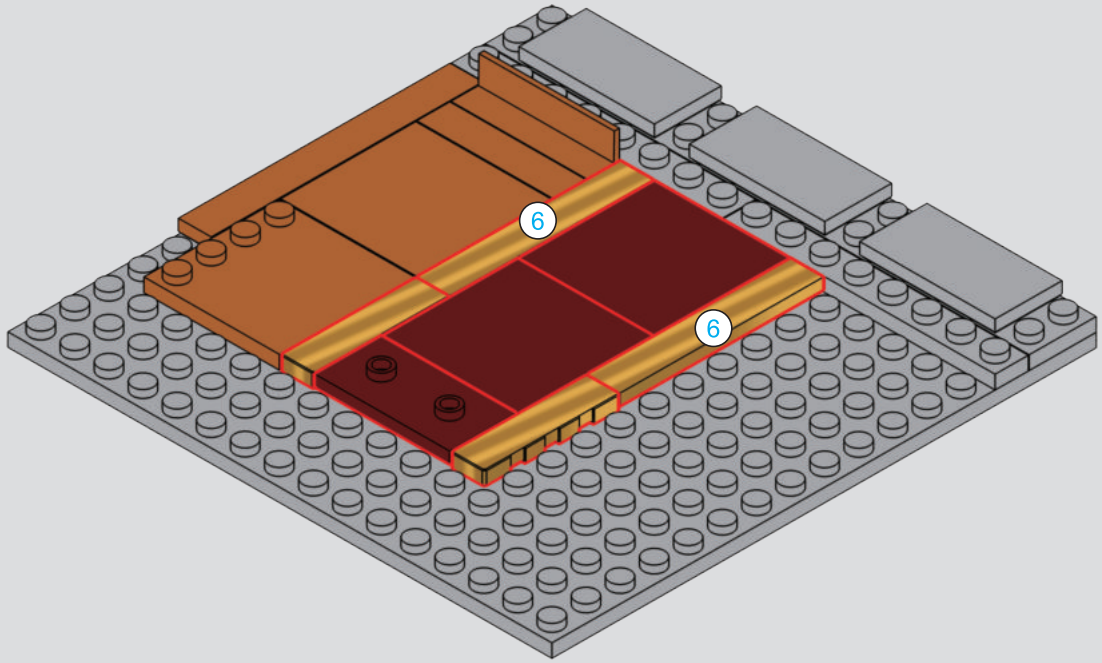

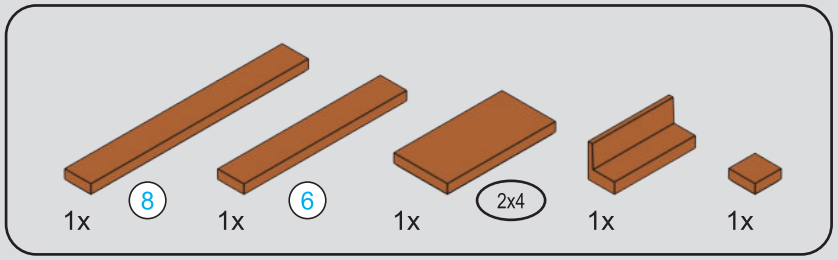



41

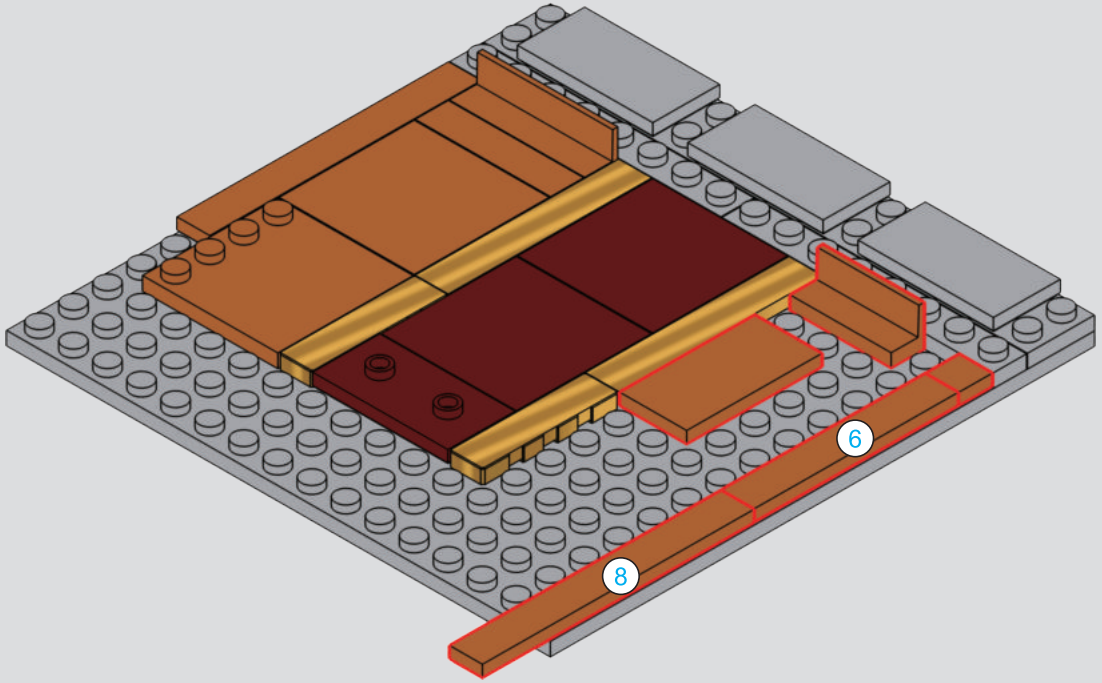



42

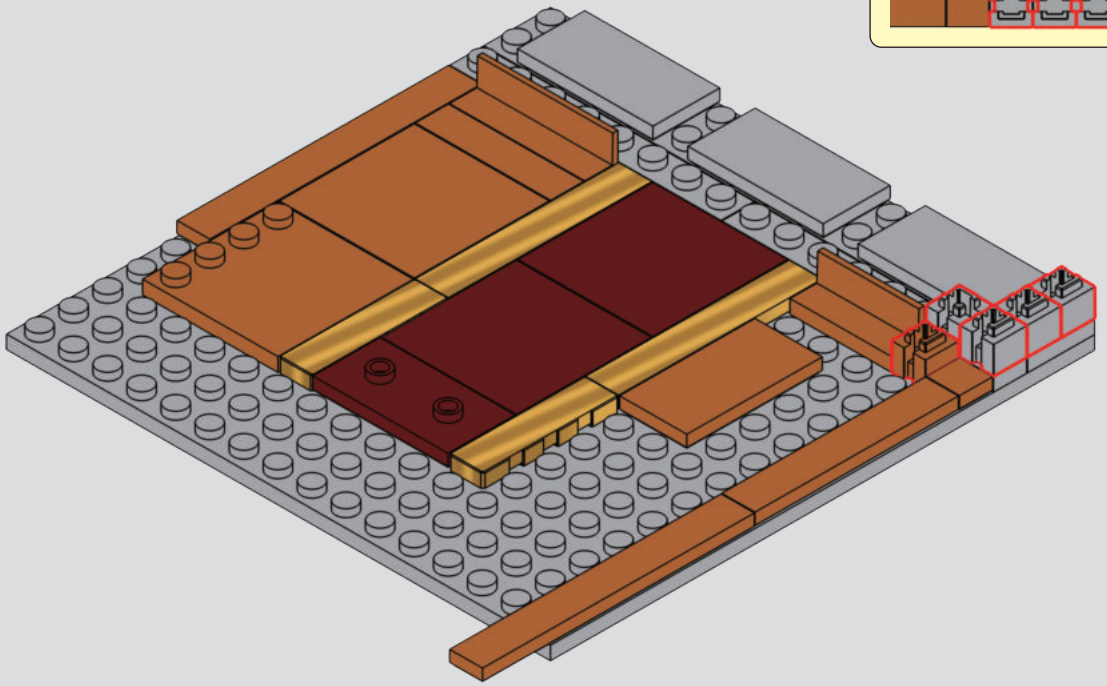

43

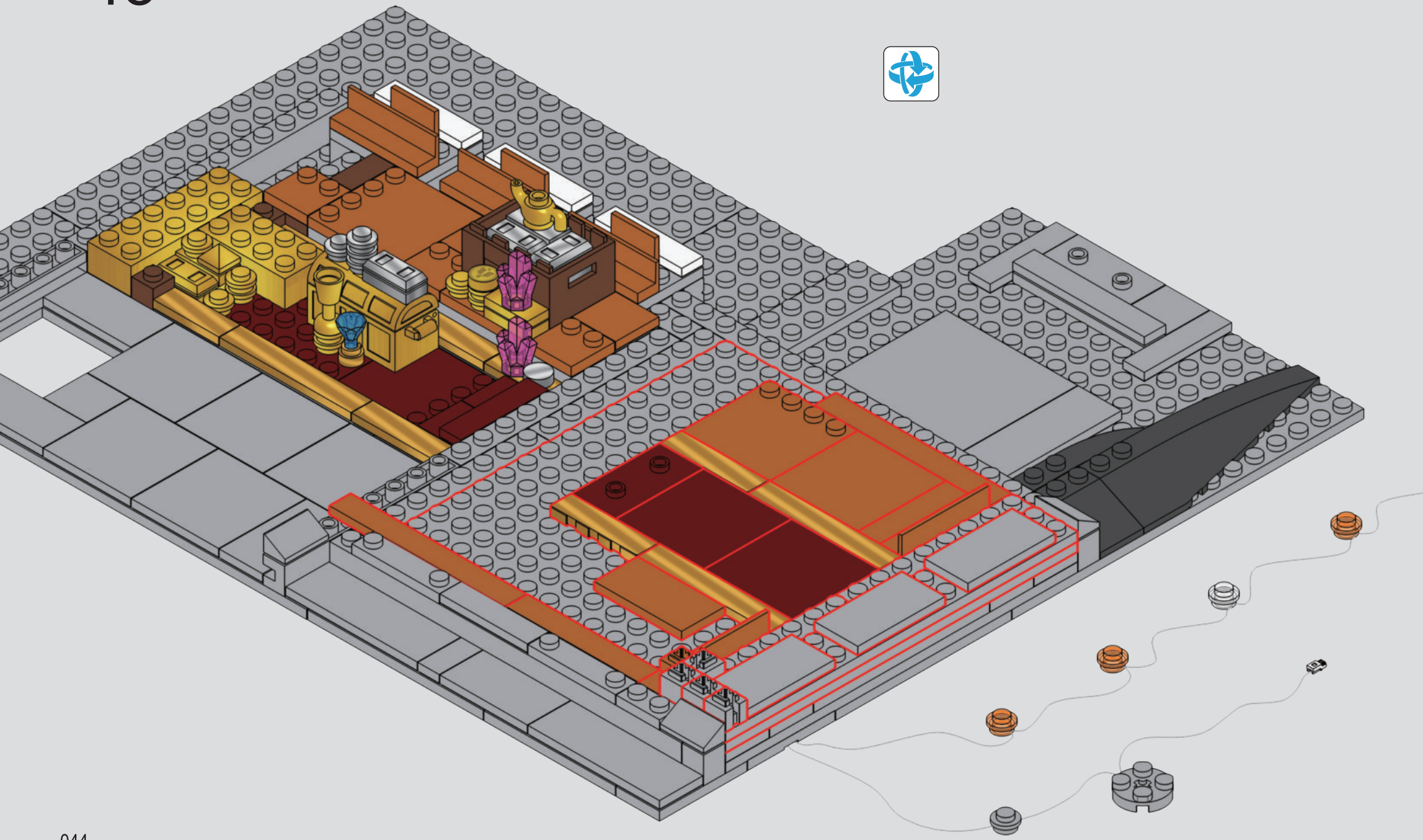

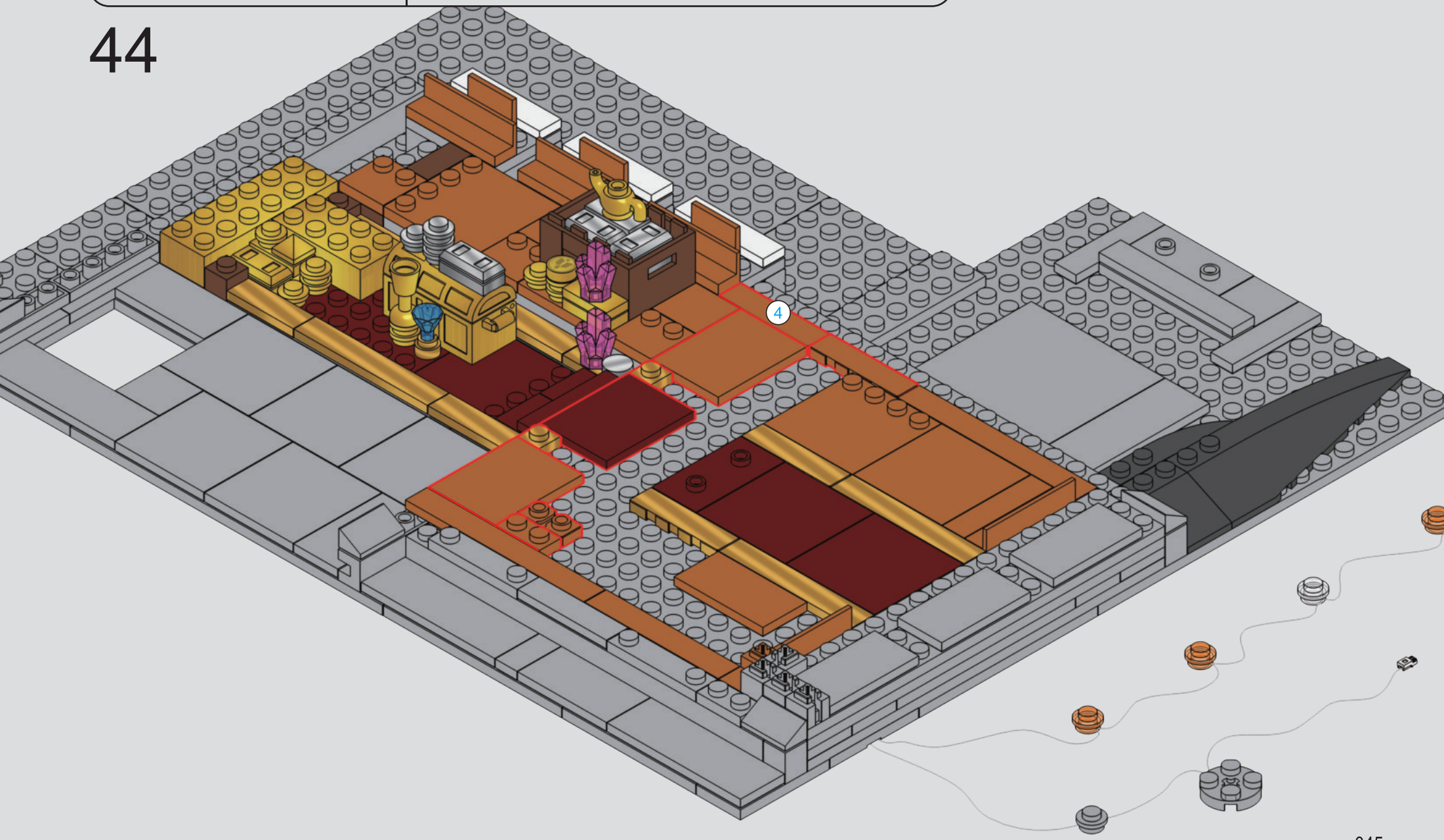

44

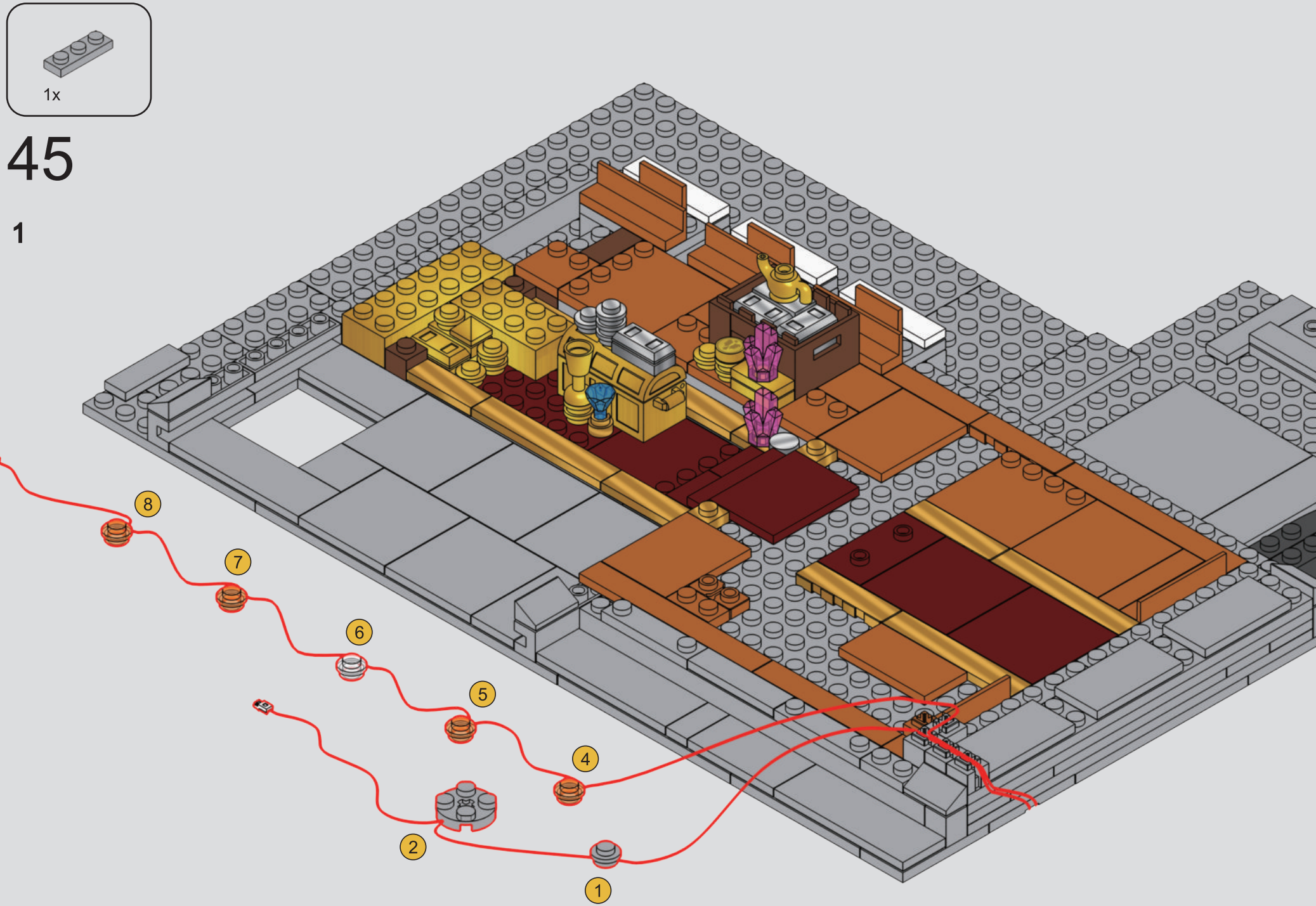
1x
45
1
8
7
6
5
4
2
1

2

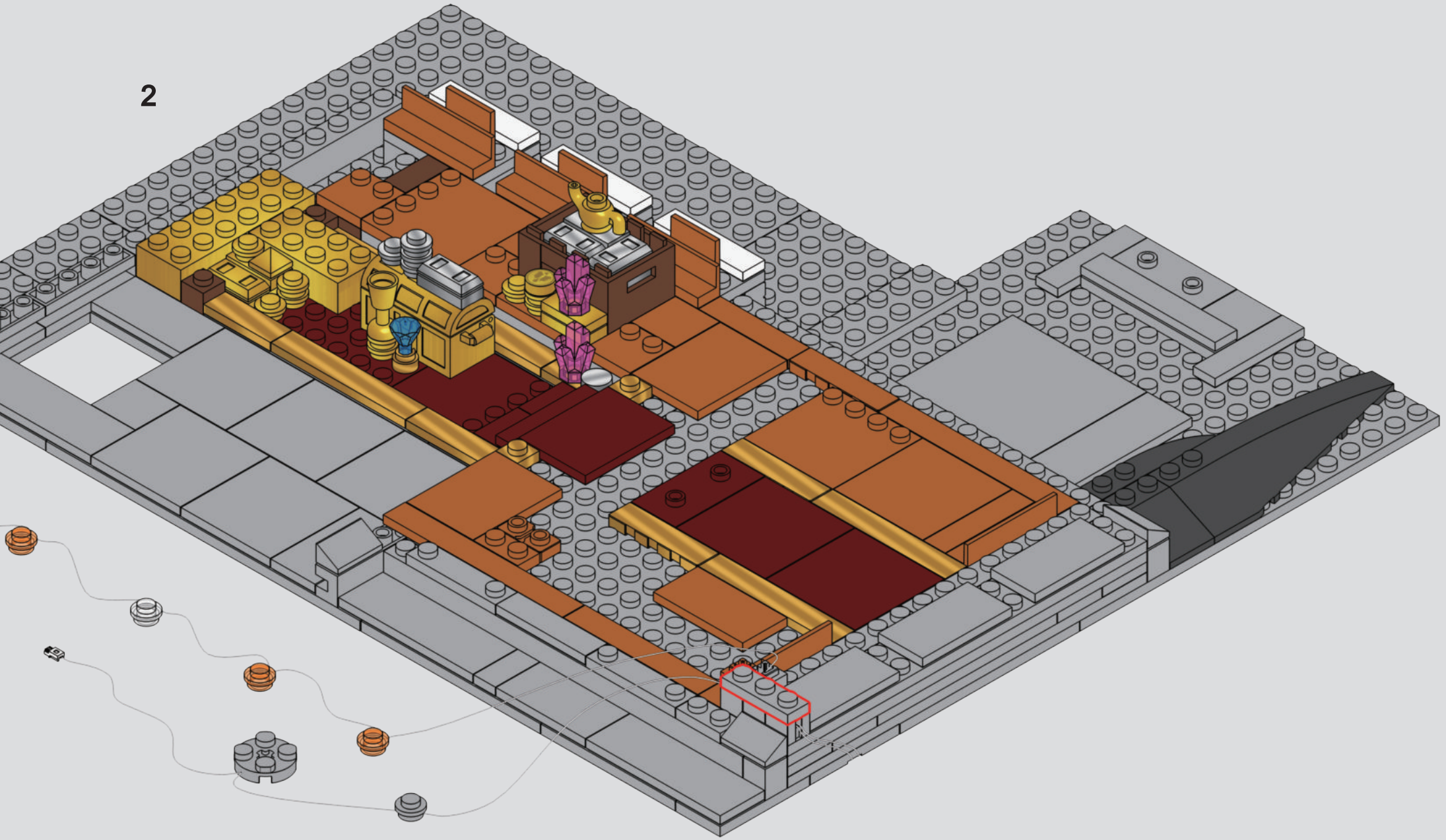

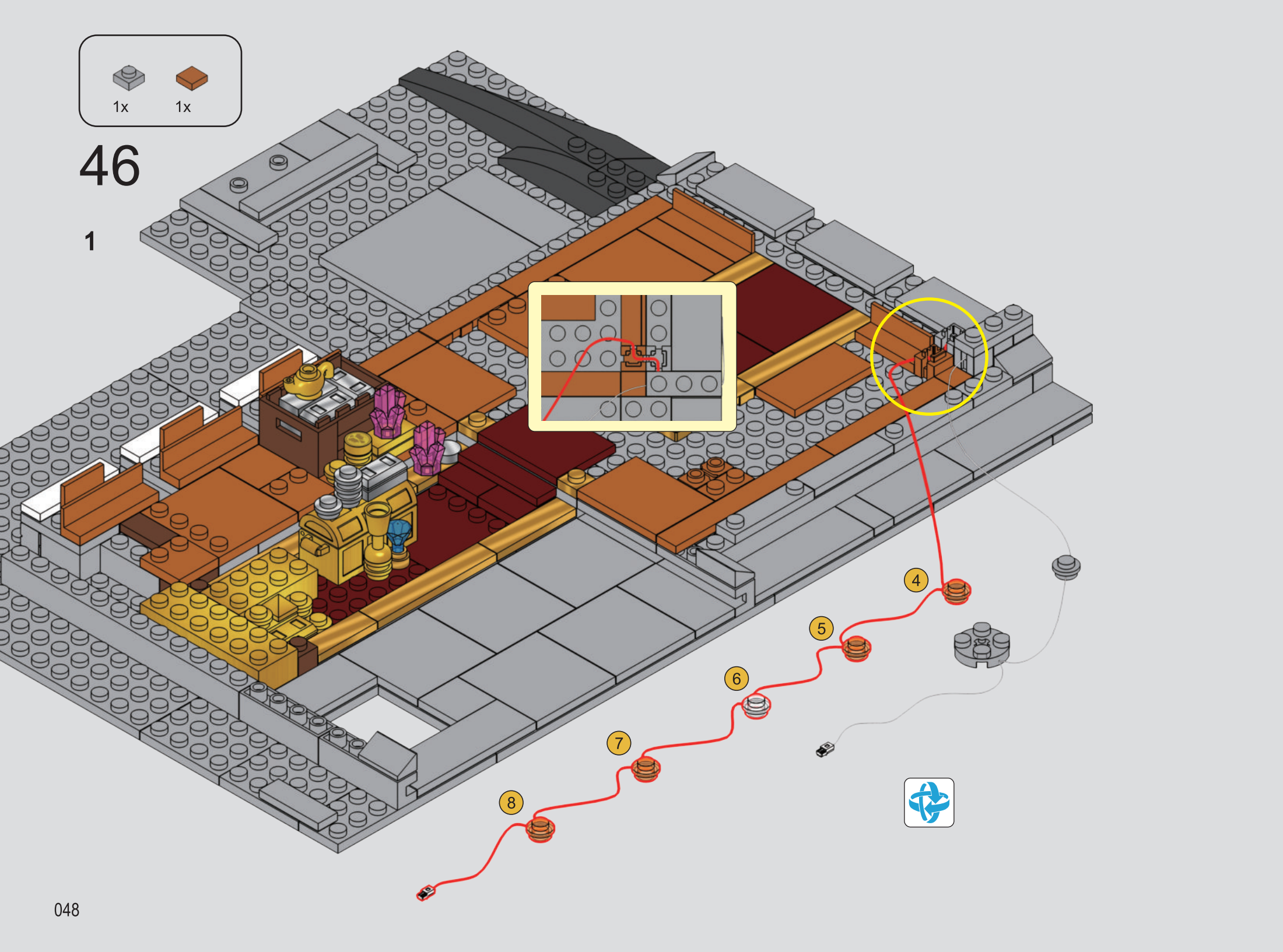
1x
1x
46
1
4
5
6
7
8

2

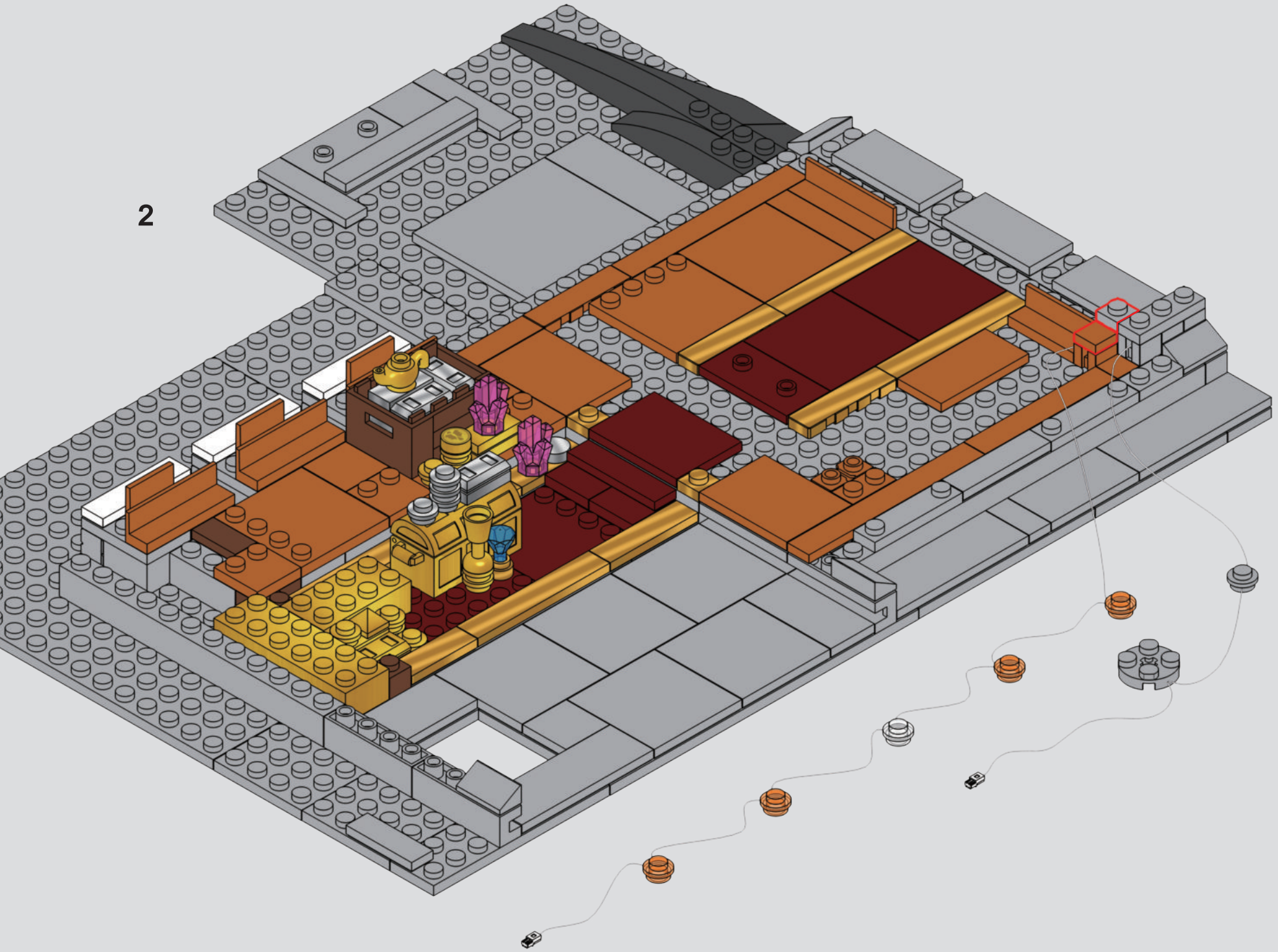

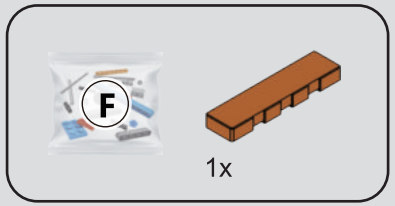

47

1

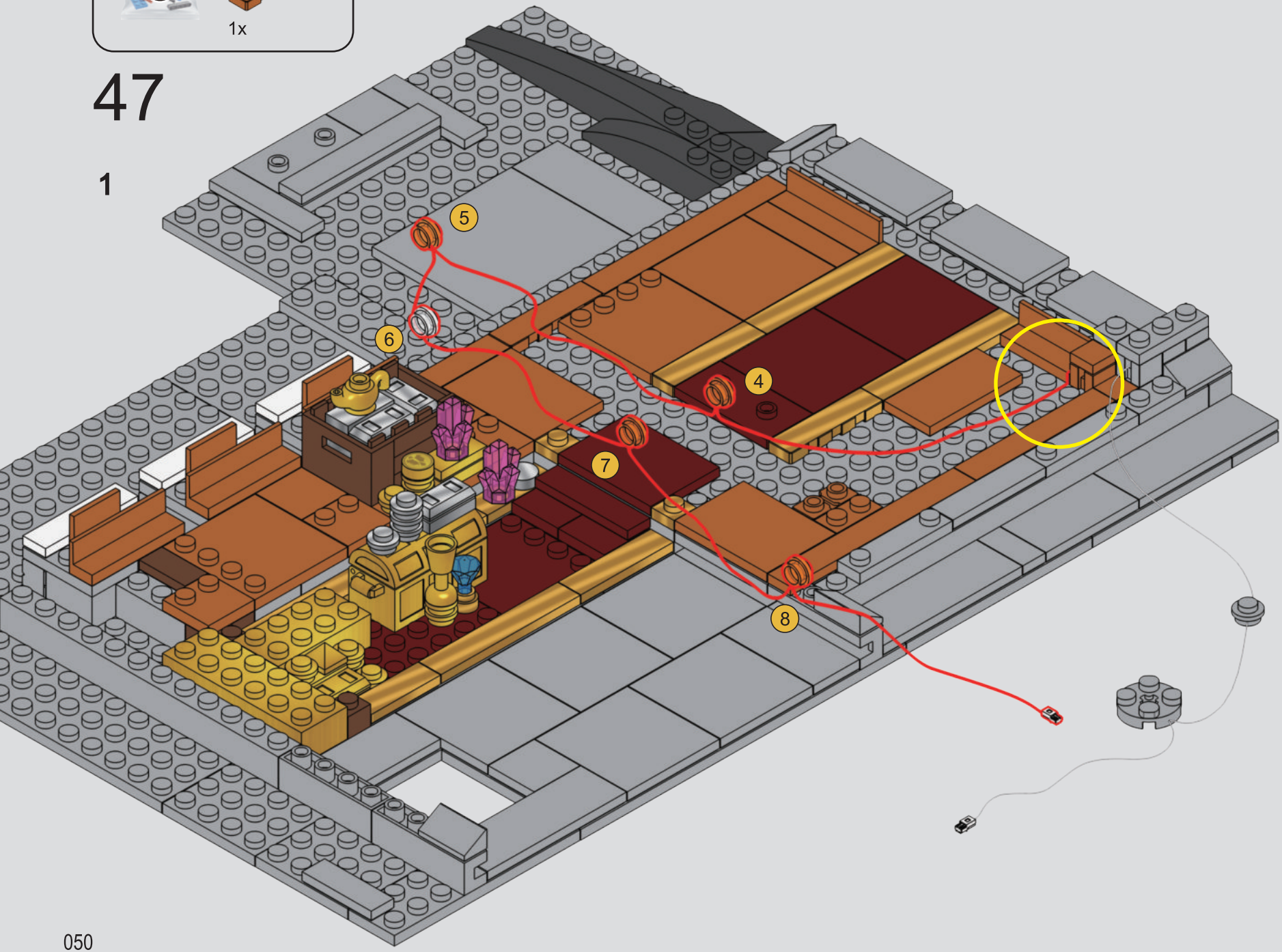

2

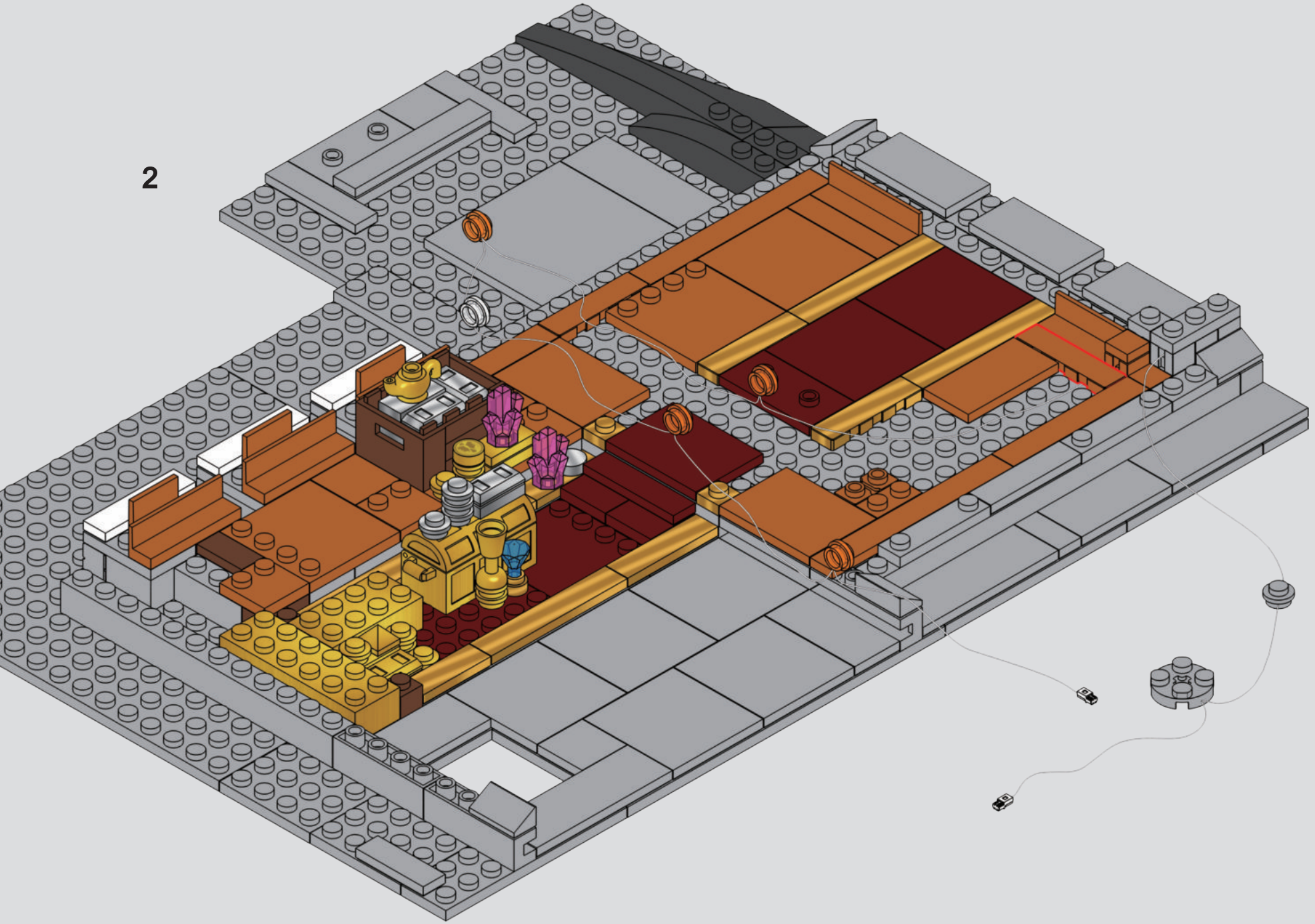



48

1

2

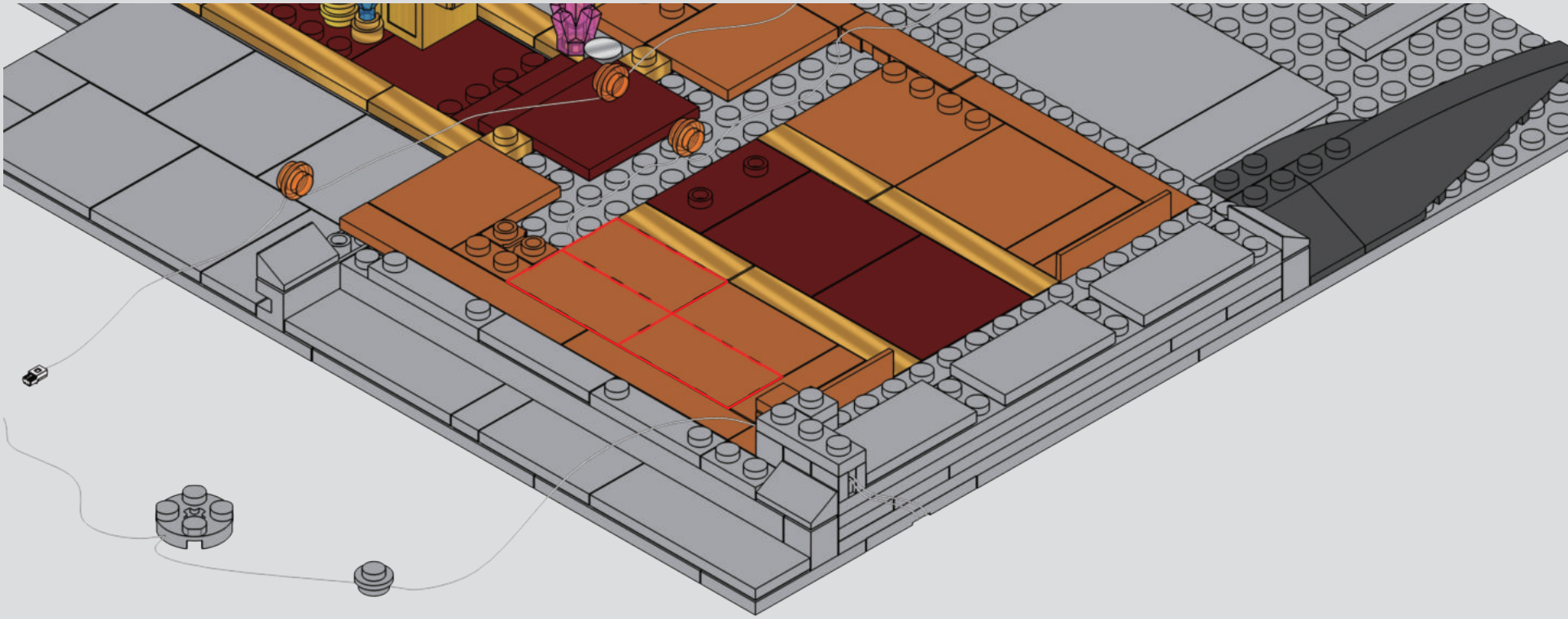

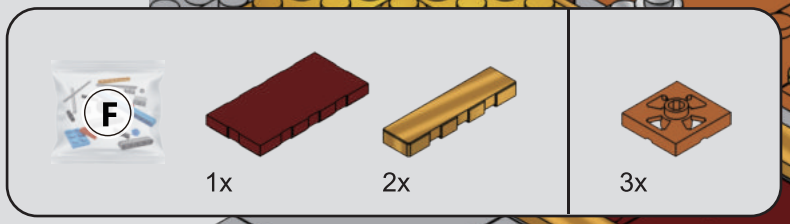

49

1

2

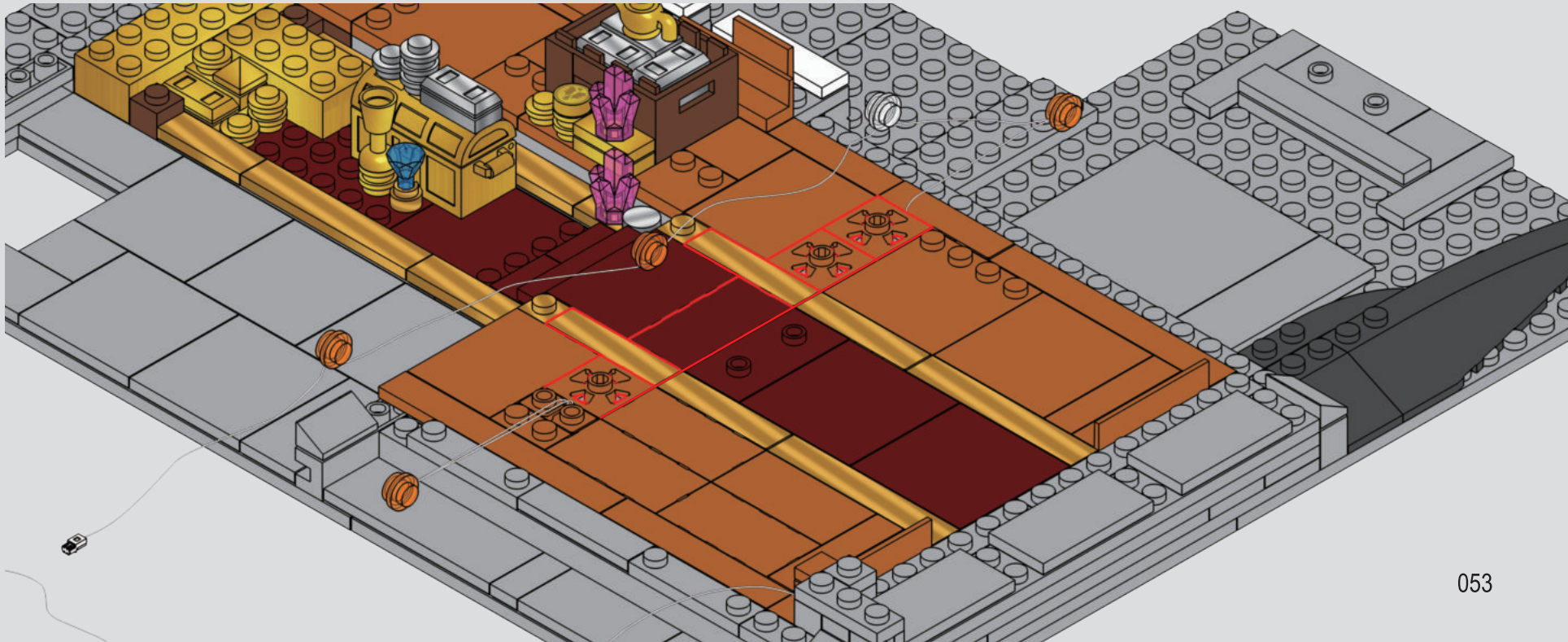

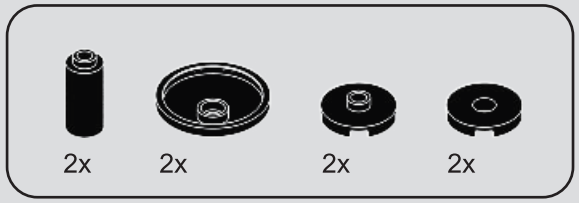

50

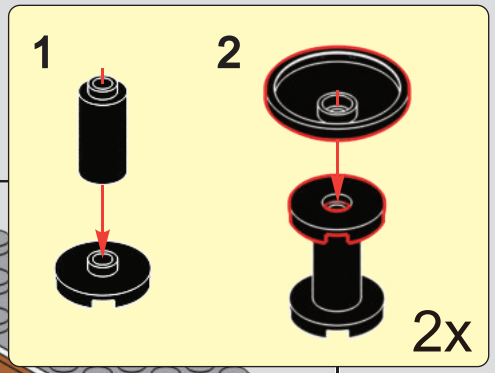

51

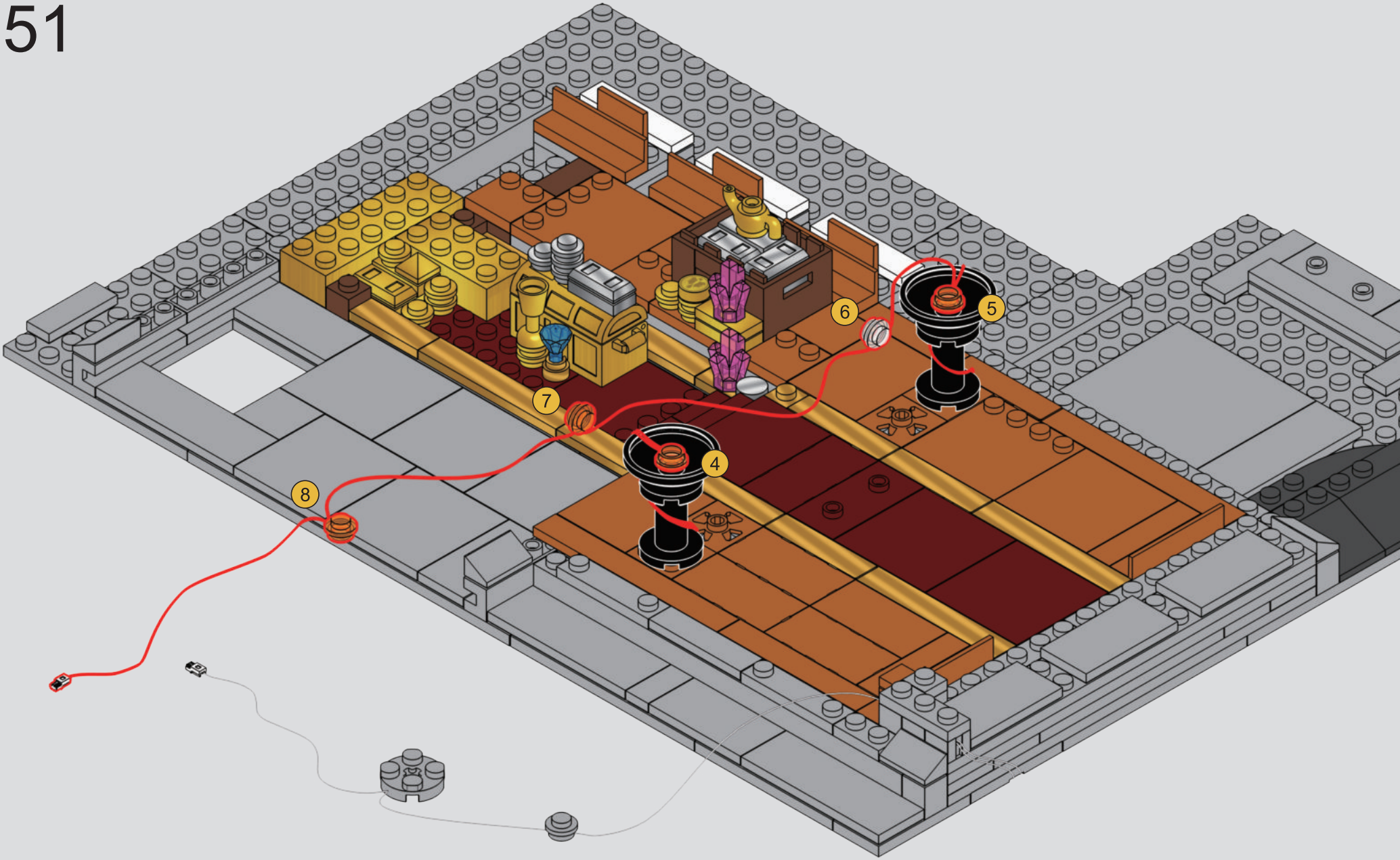

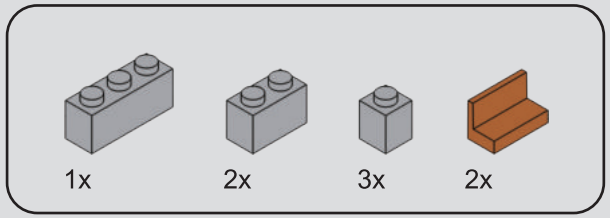

52

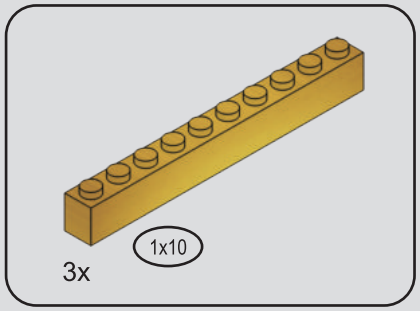

53

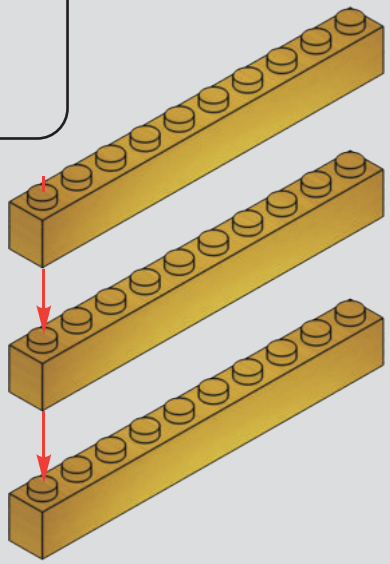

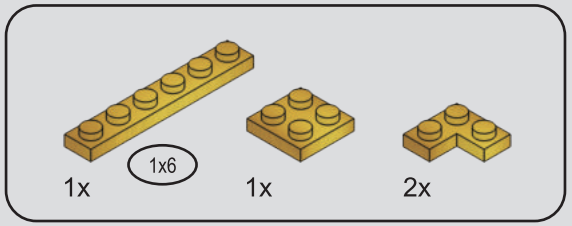

54

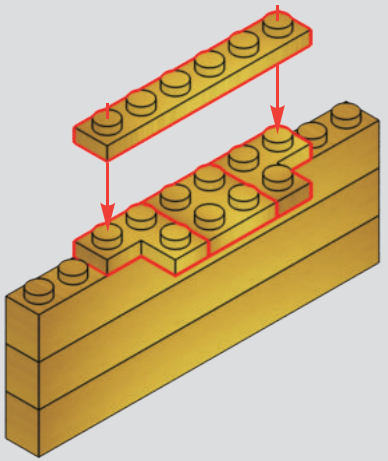

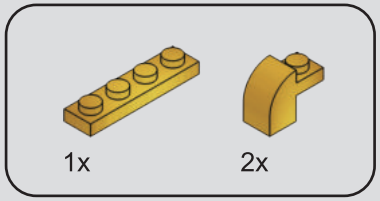

55

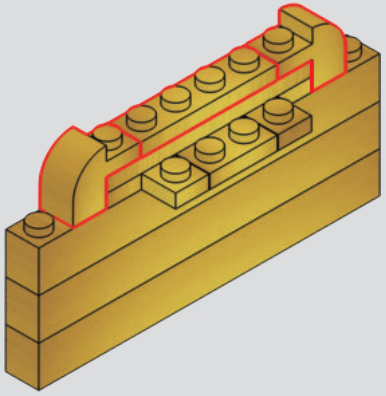

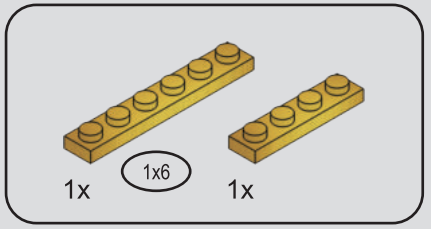

56

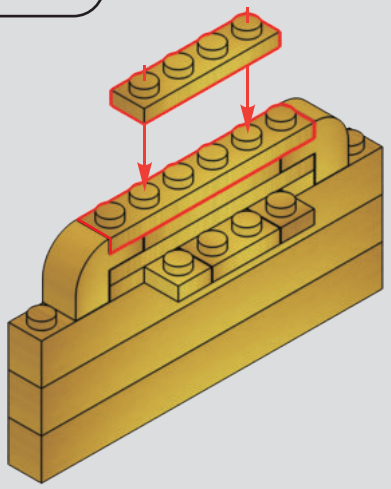

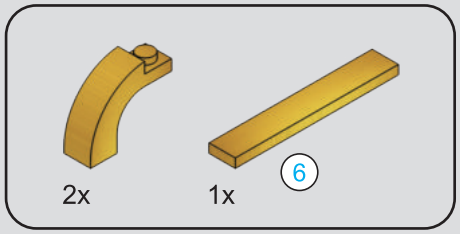

57

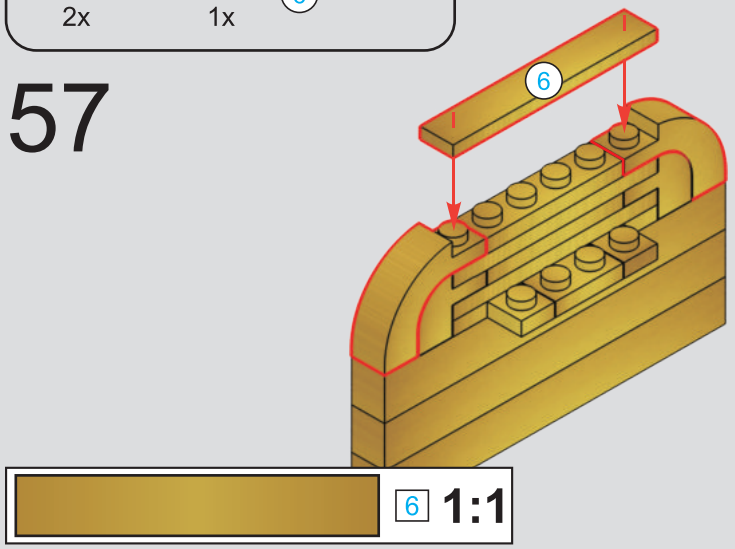

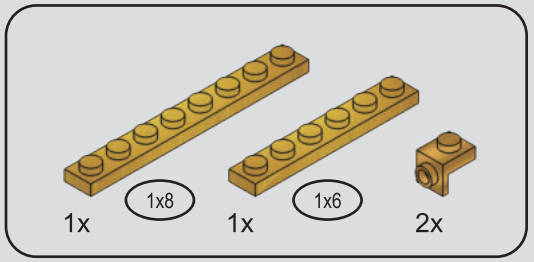

58

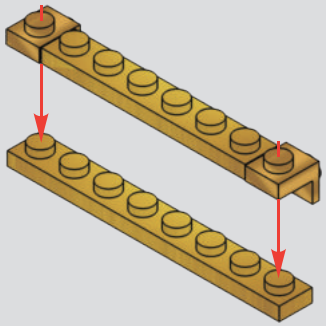

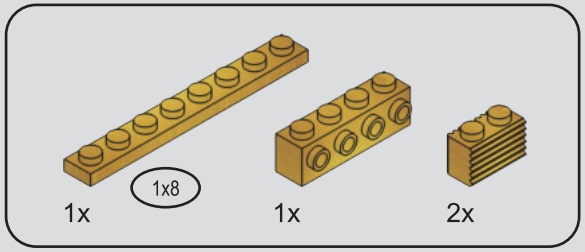

59

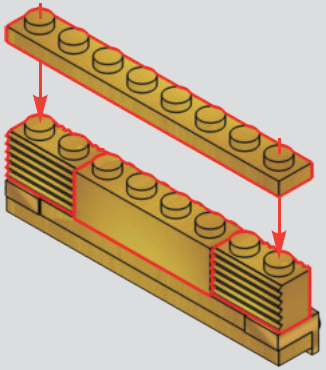

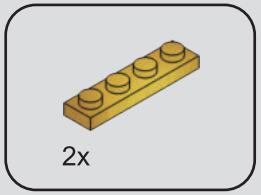

60

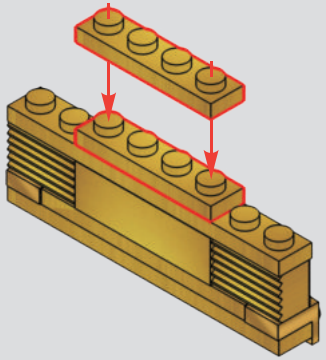

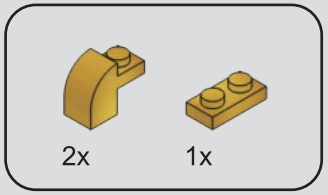

61

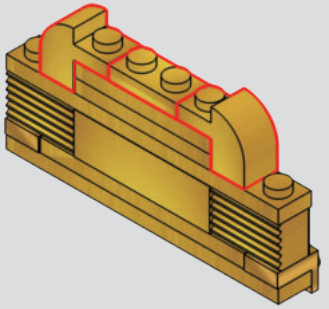

62

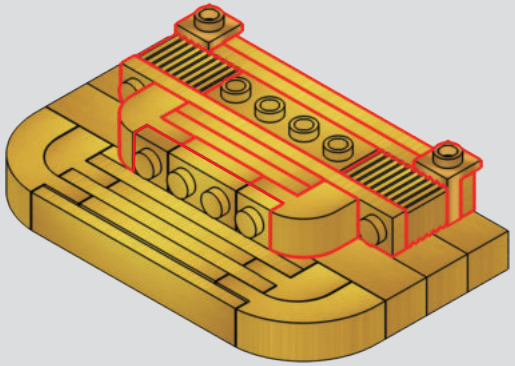

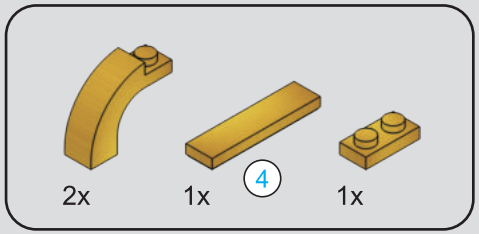



63

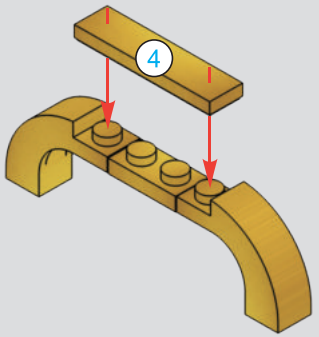

64

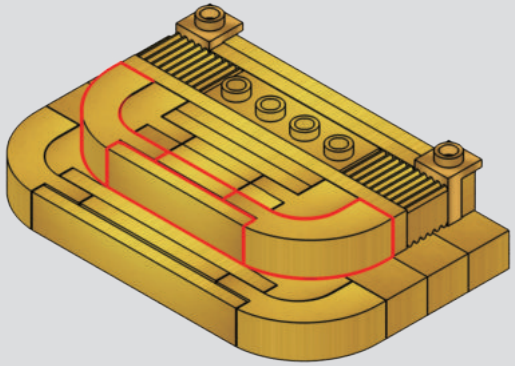

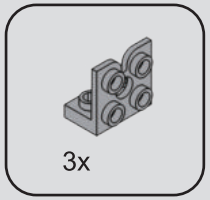

65

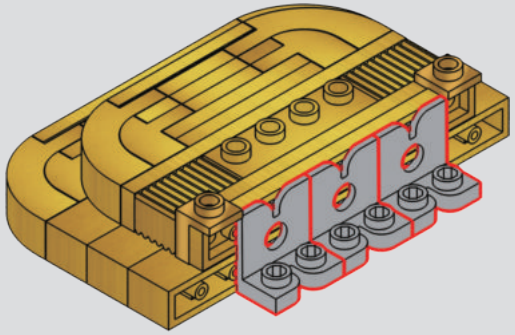

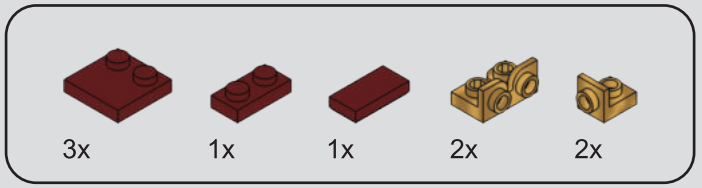

66

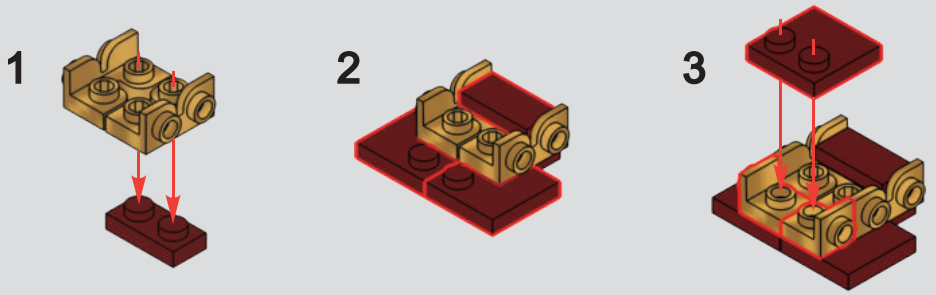

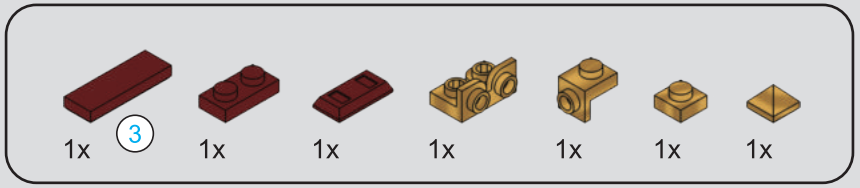

67

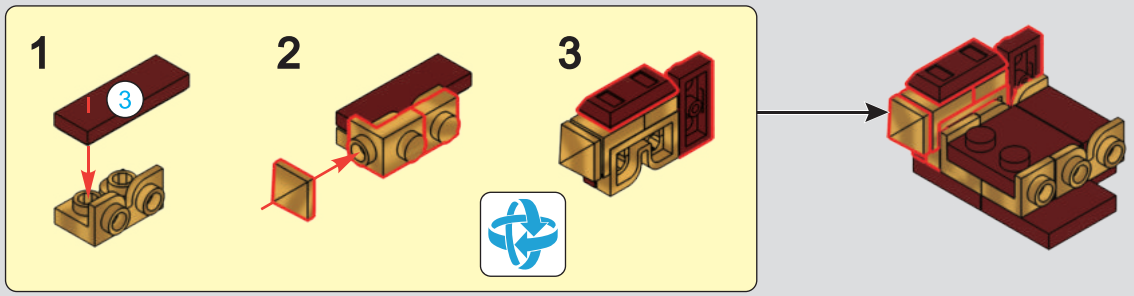

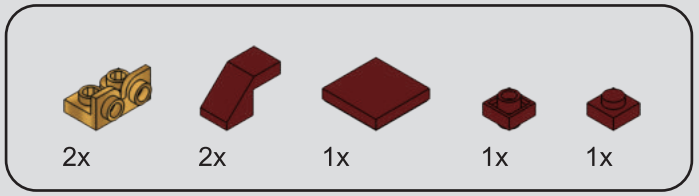

68

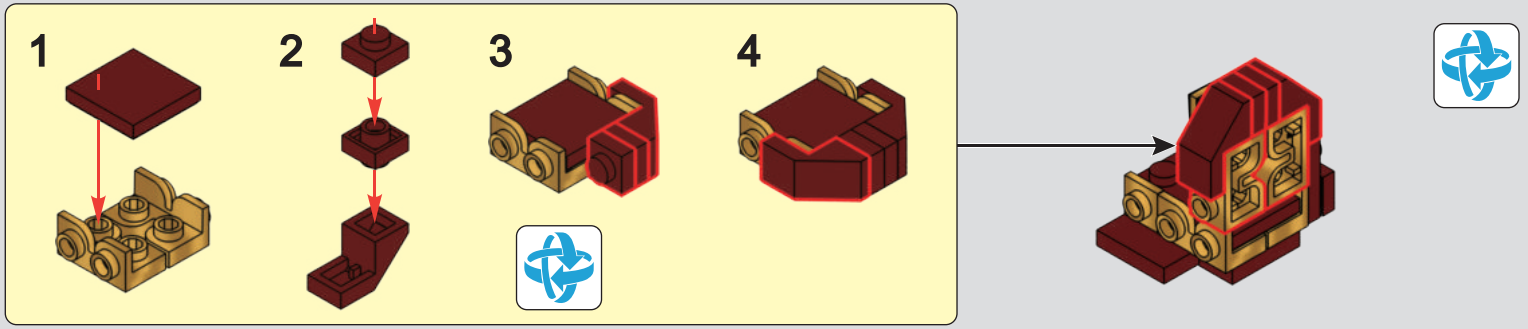

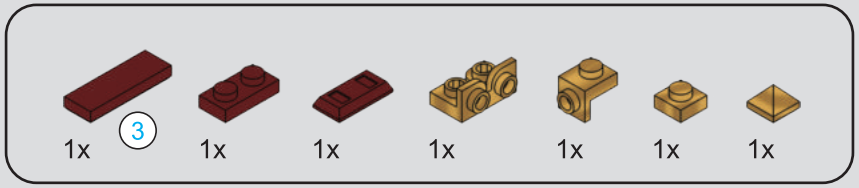

69

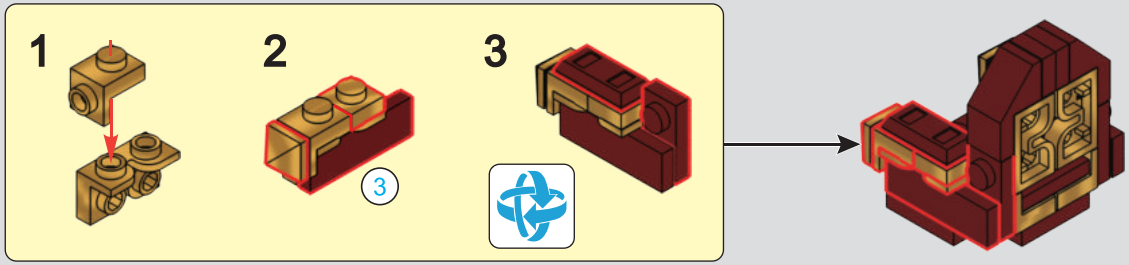

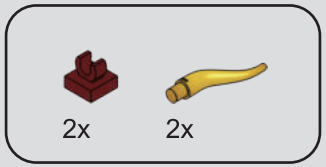

70

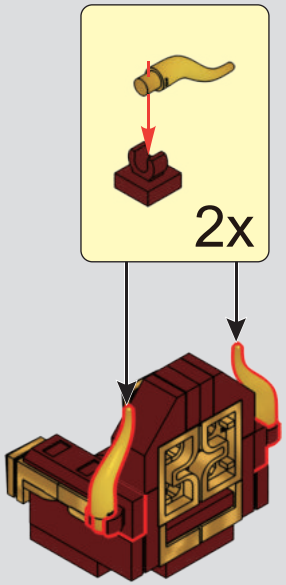

71

1

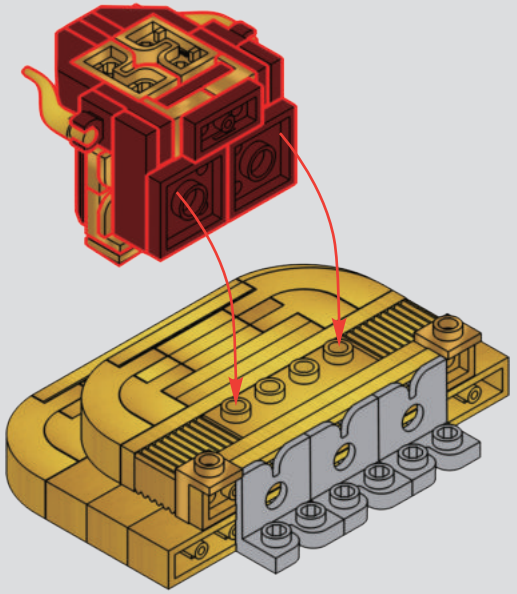

2

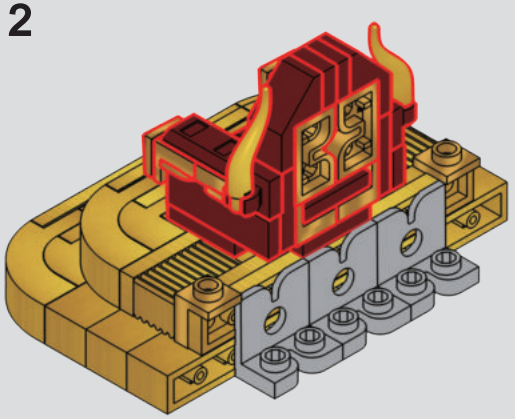

72

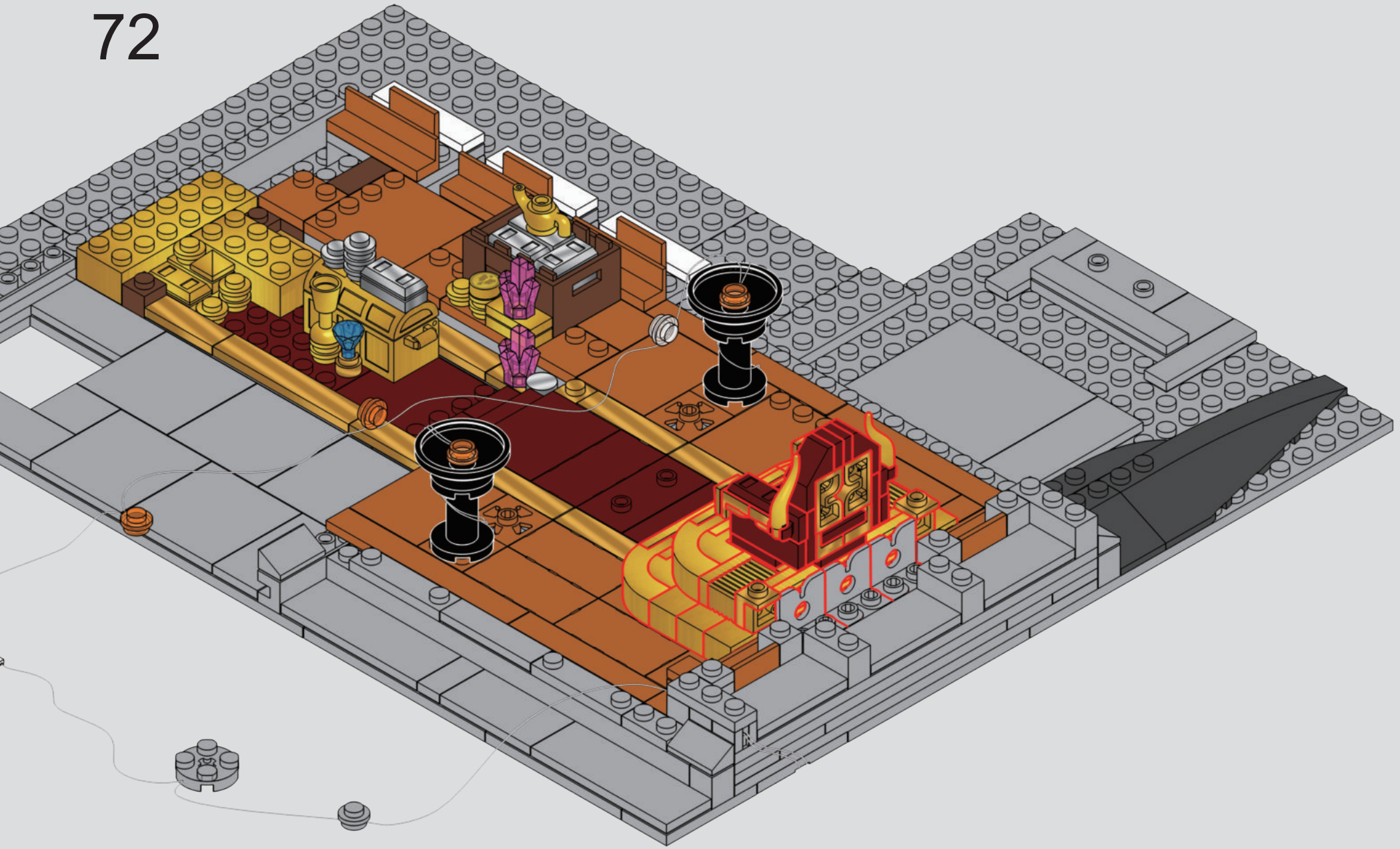

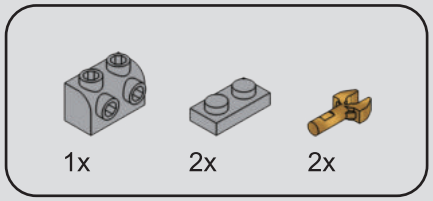

73

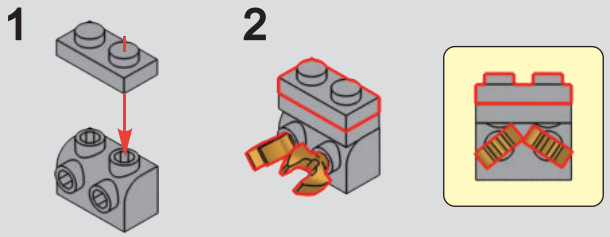

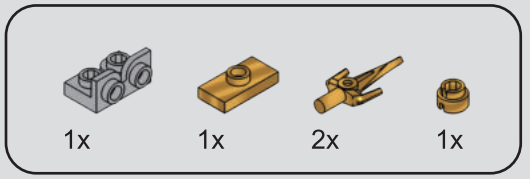

74

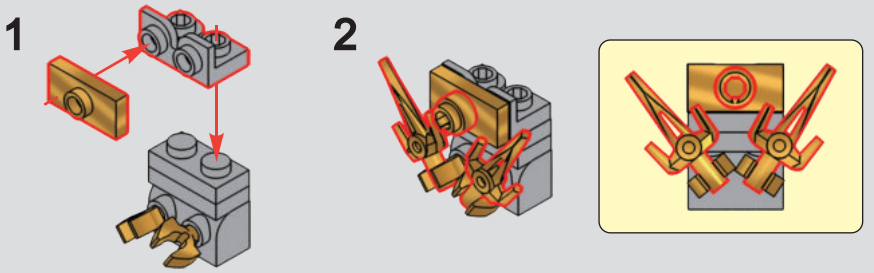

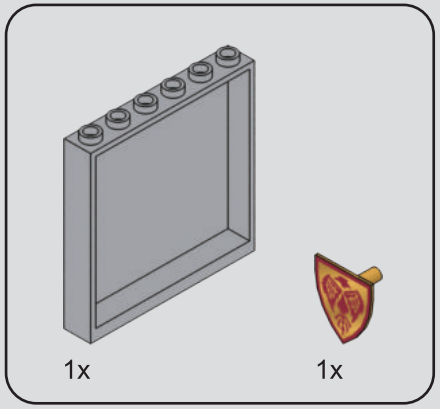

75

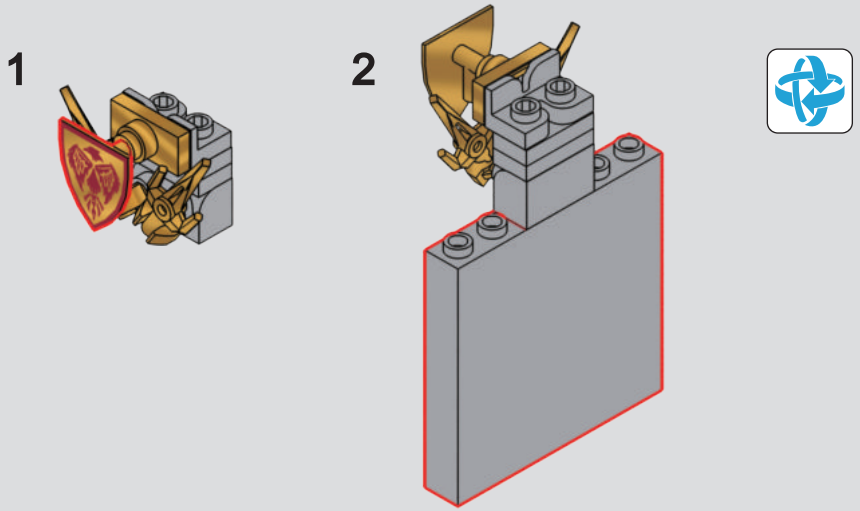

76

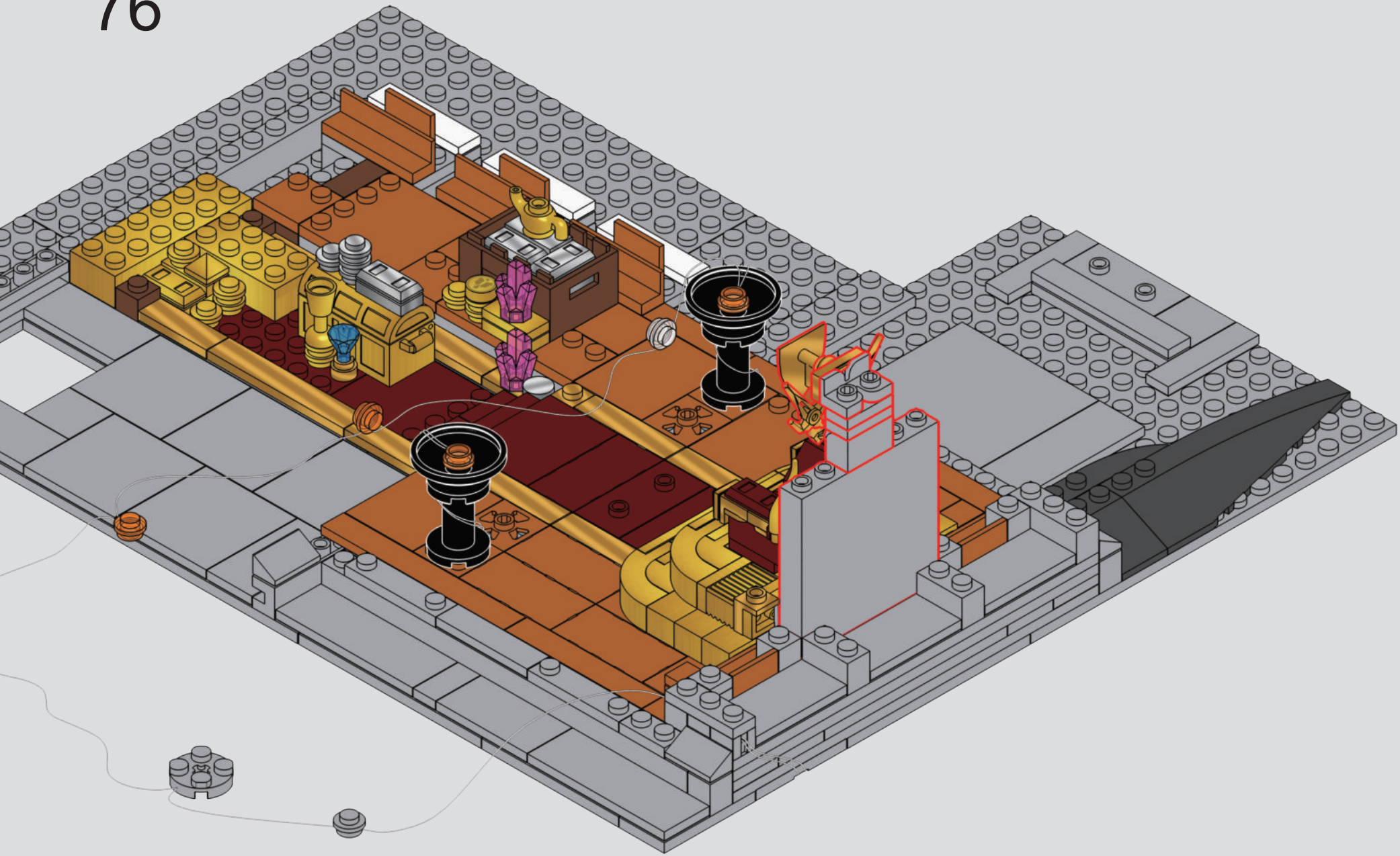

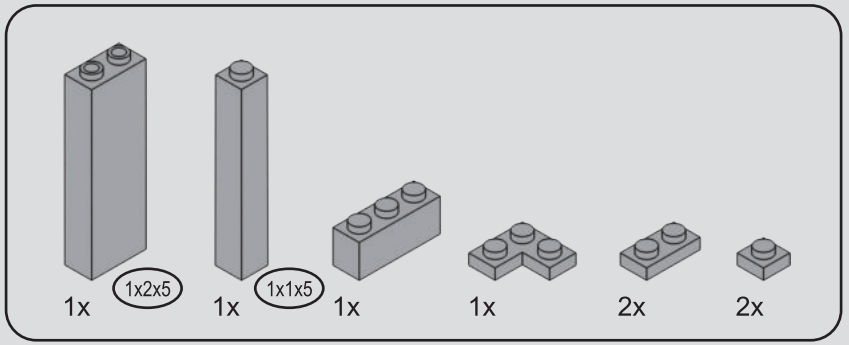

77

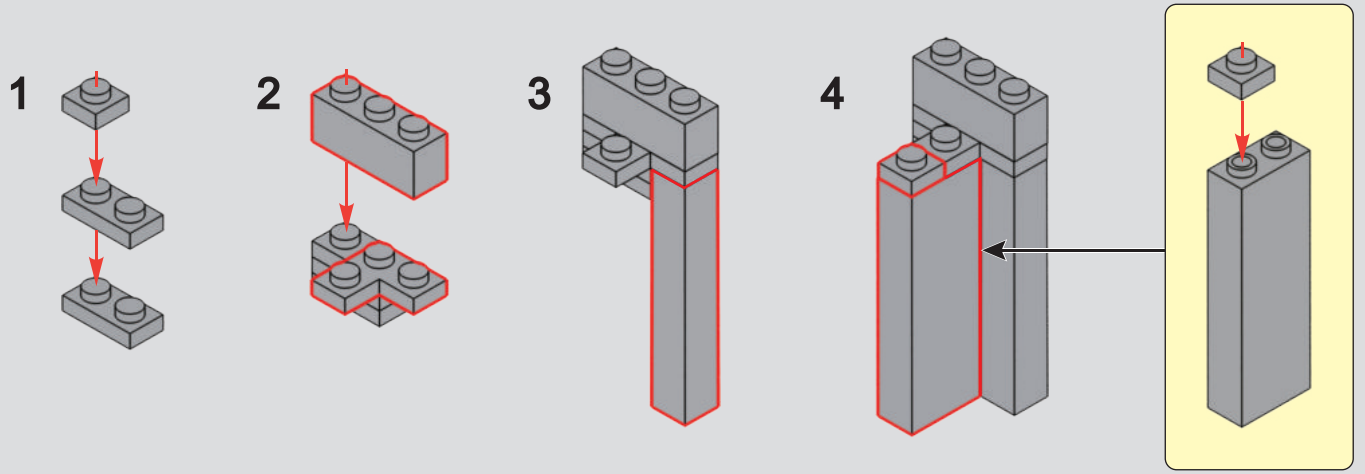

78

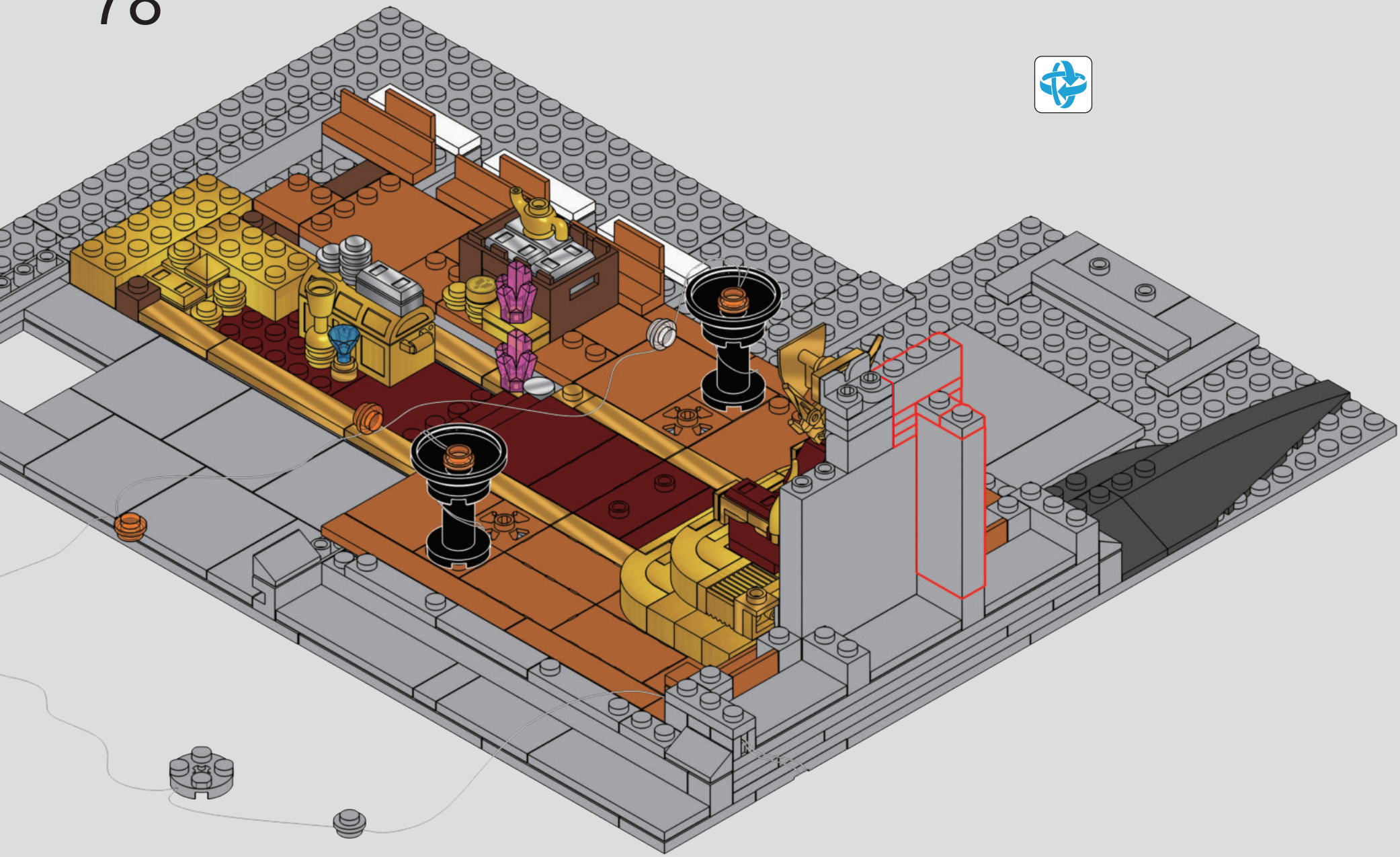

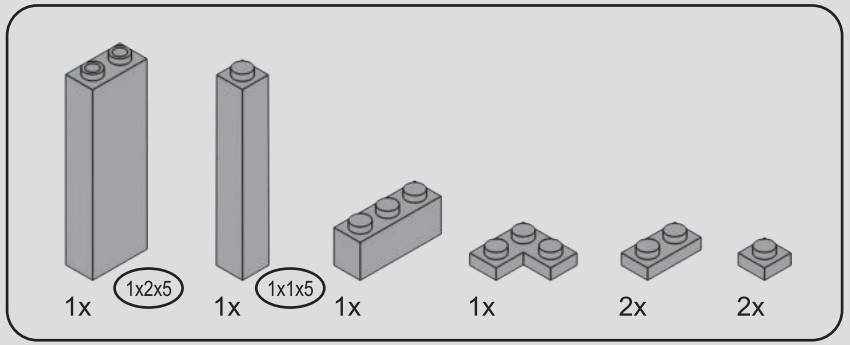

79

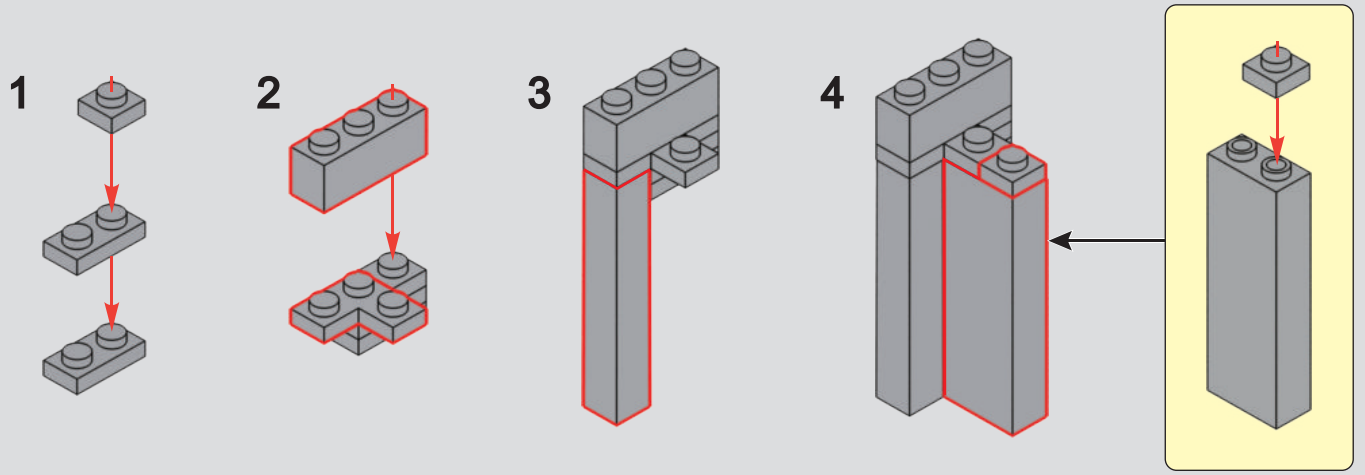

80

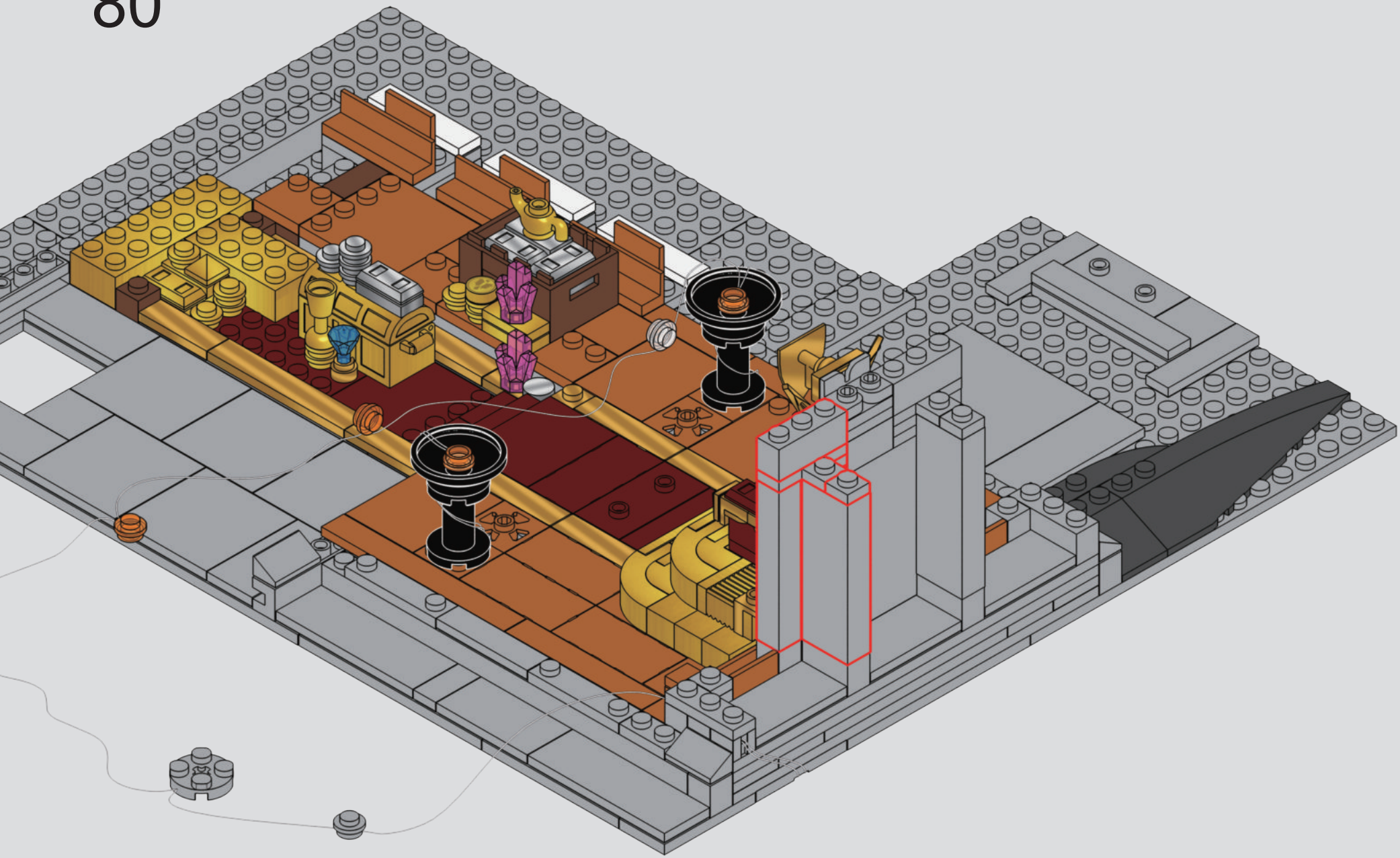

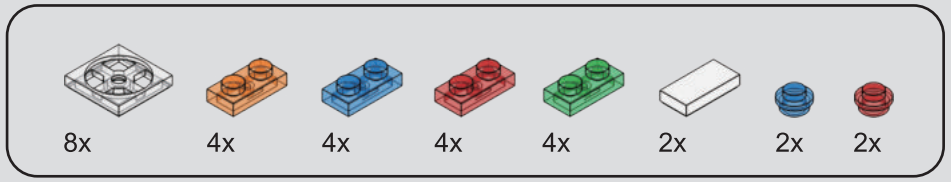

81

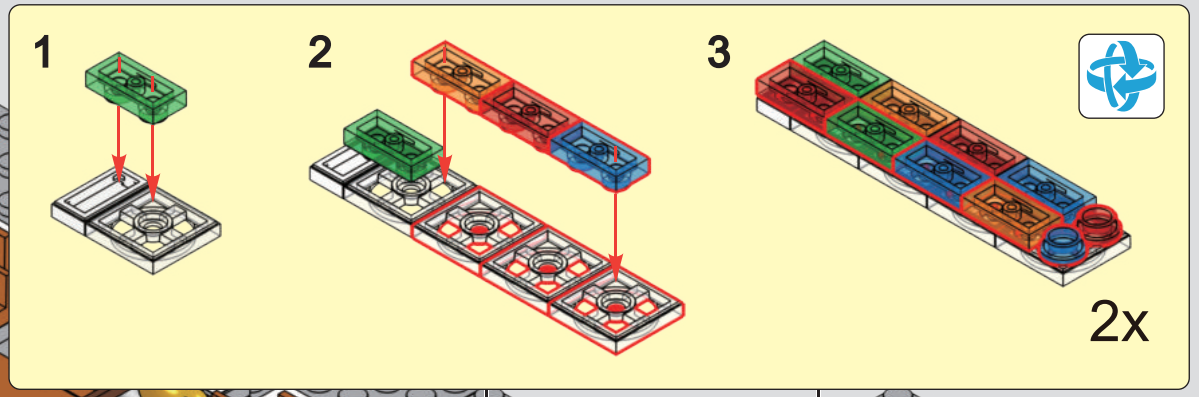

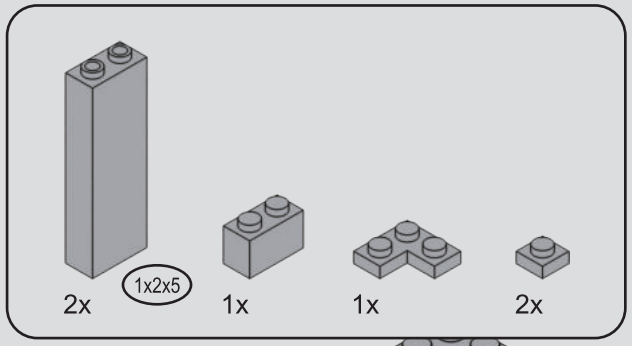

82

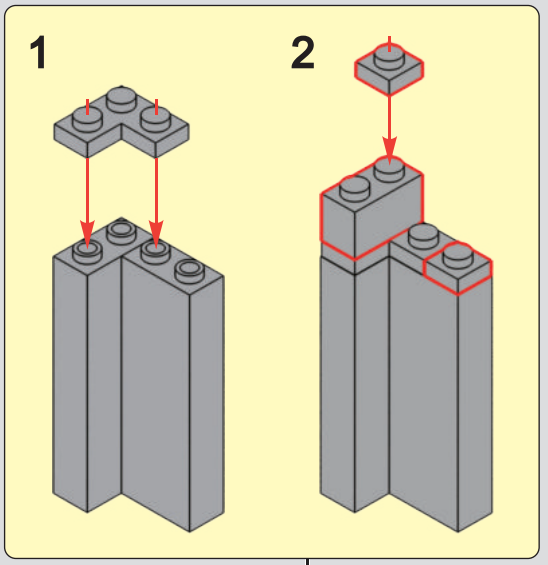

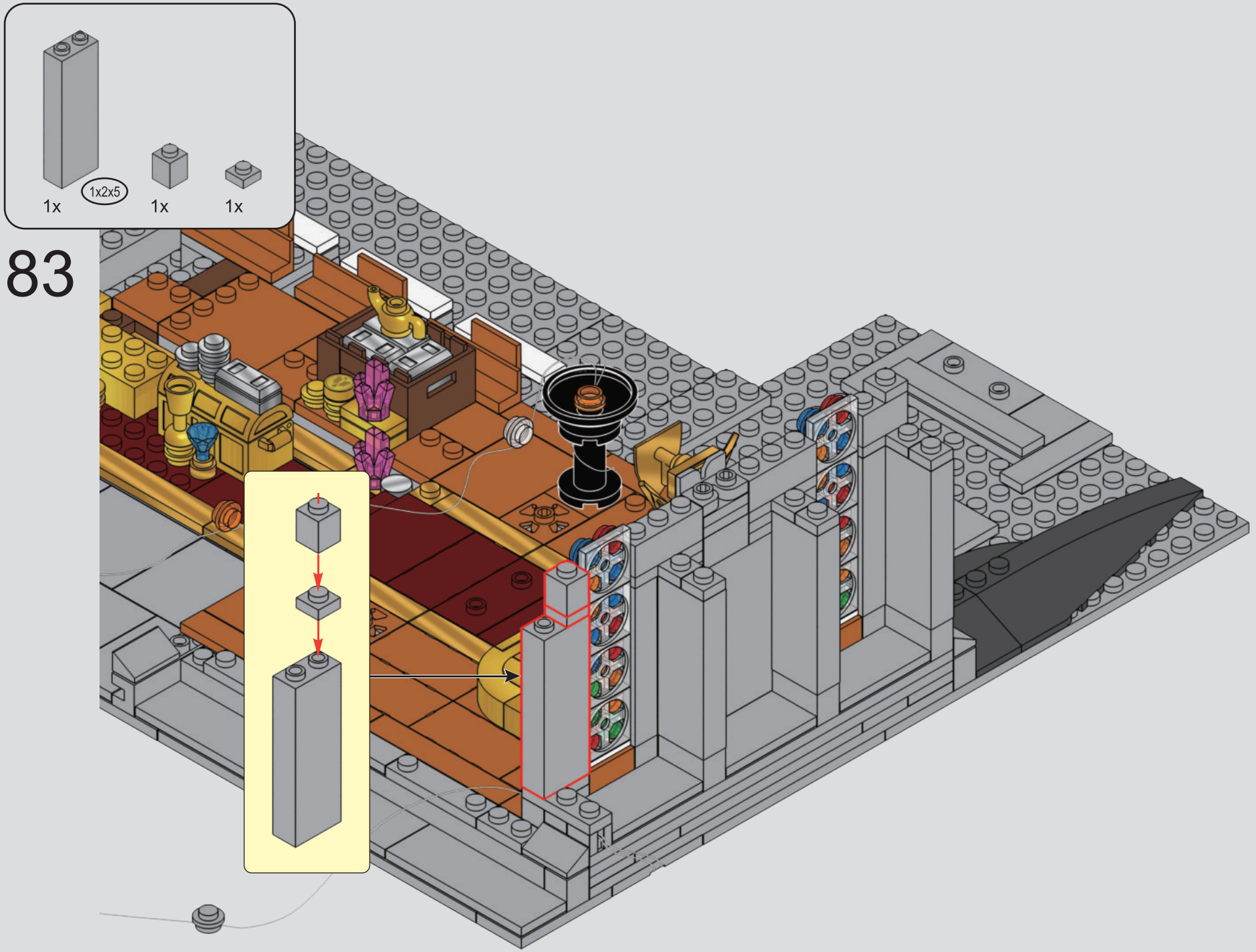

83

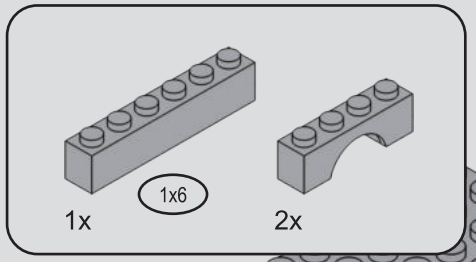

84

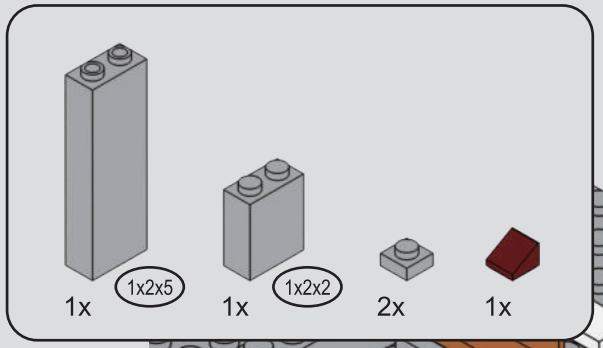

85

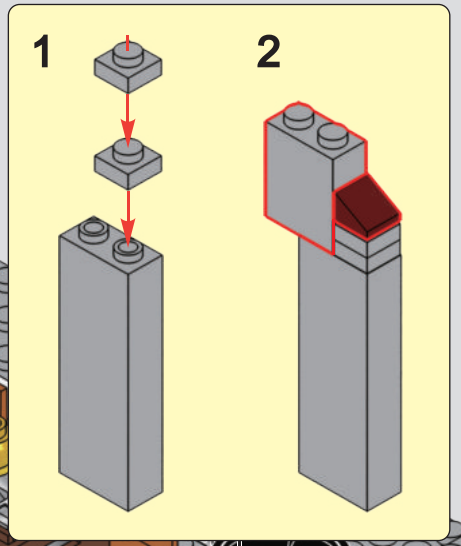

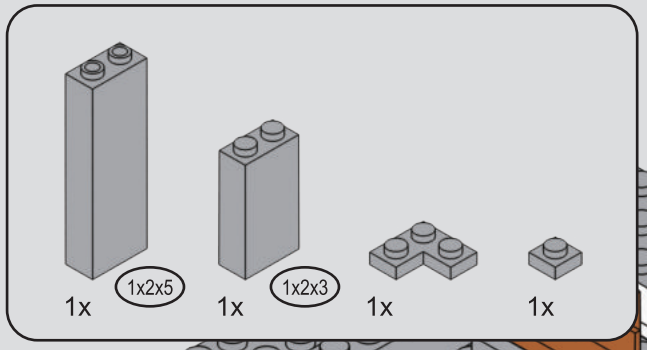

86

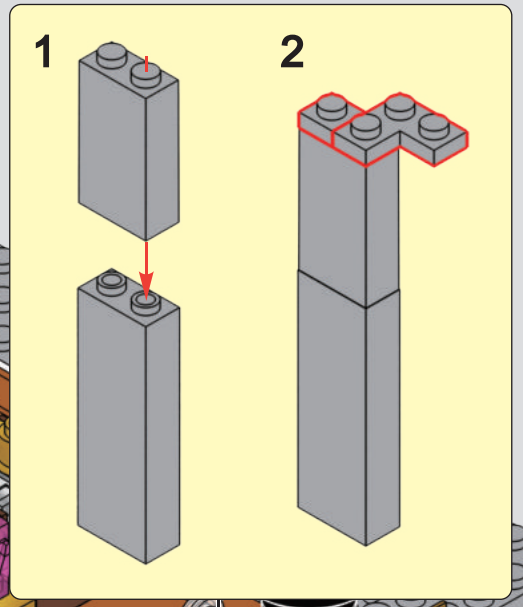

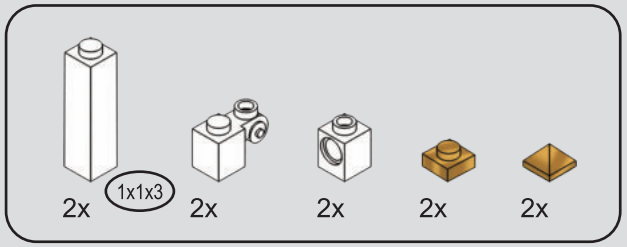

87

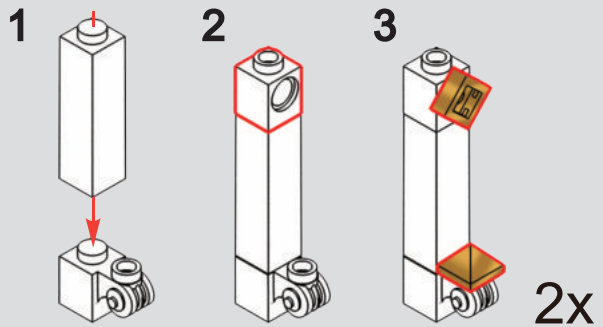

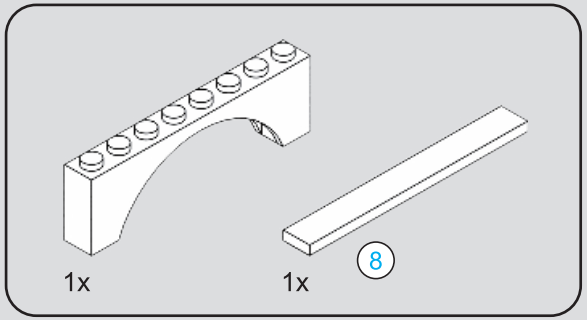

88

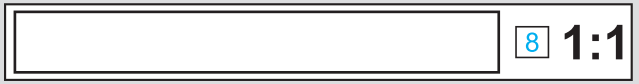

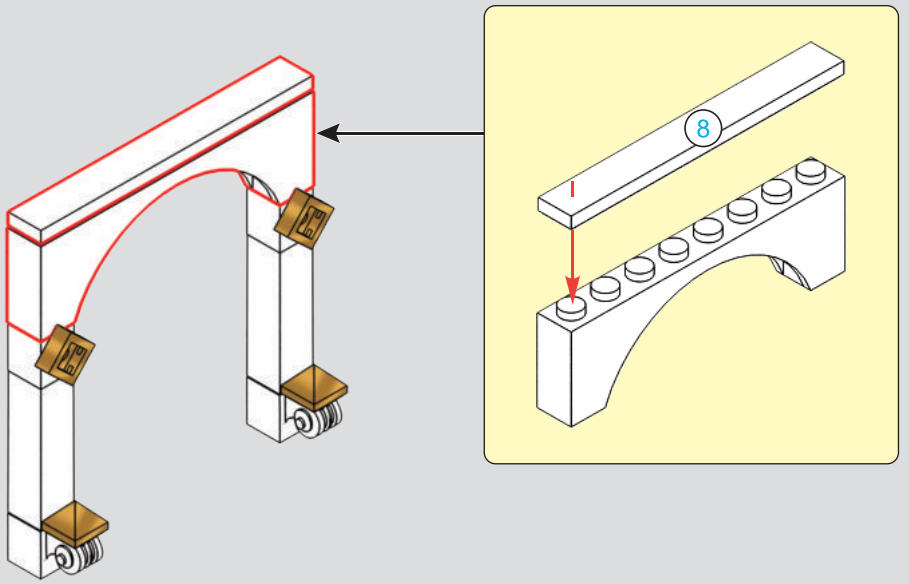

89

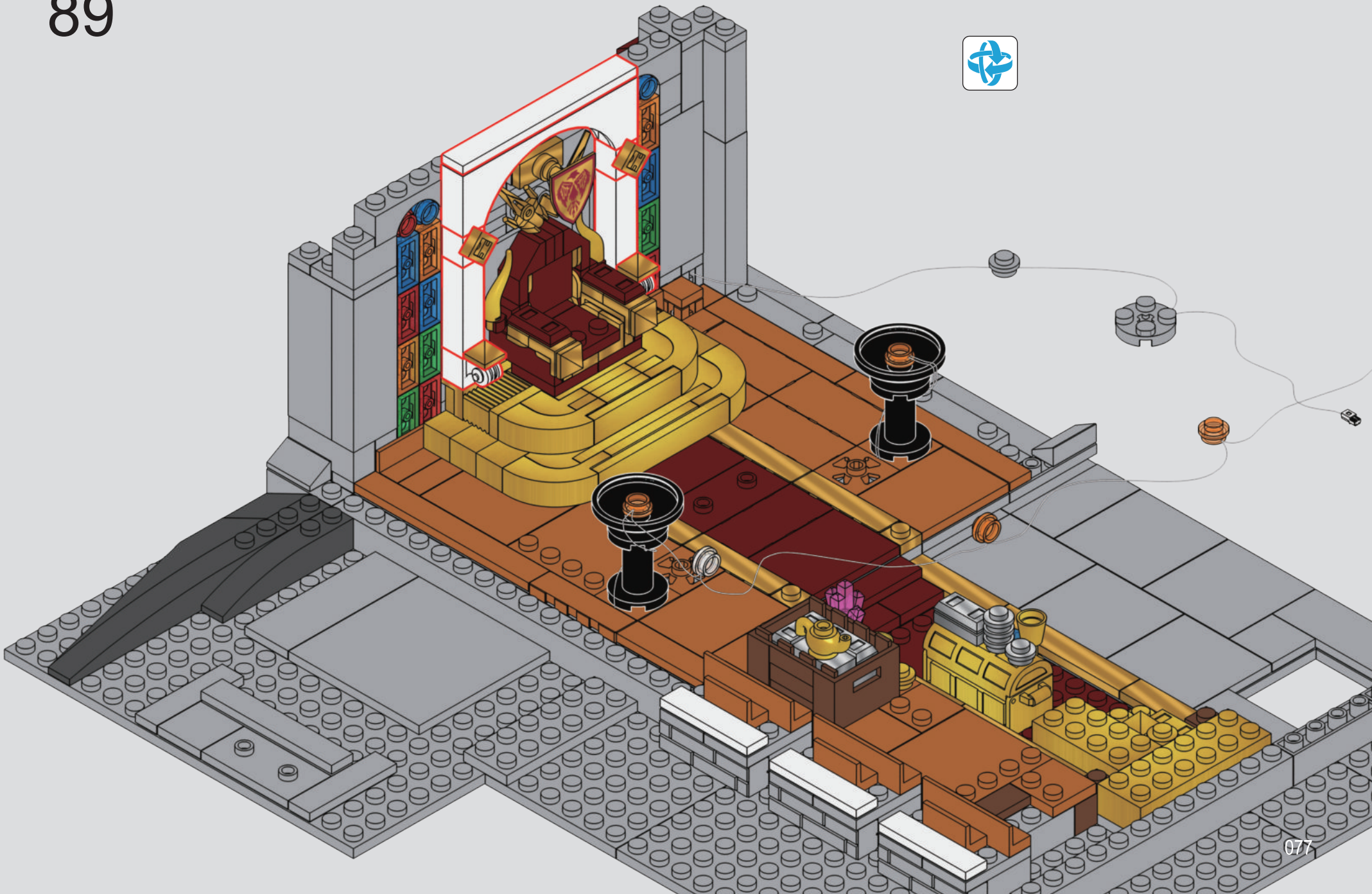


F
2x
2x
2x
90
2x

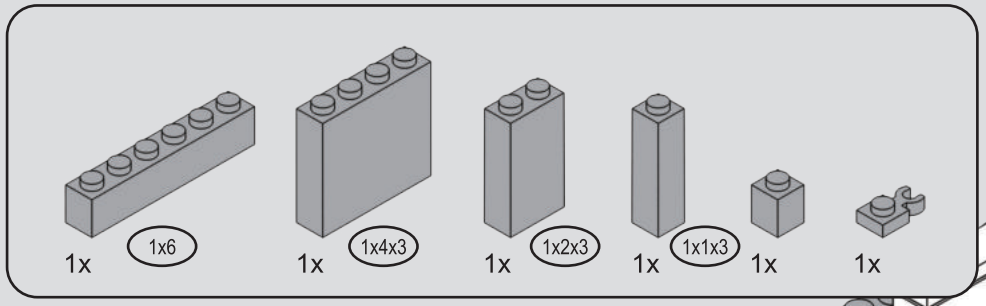

91

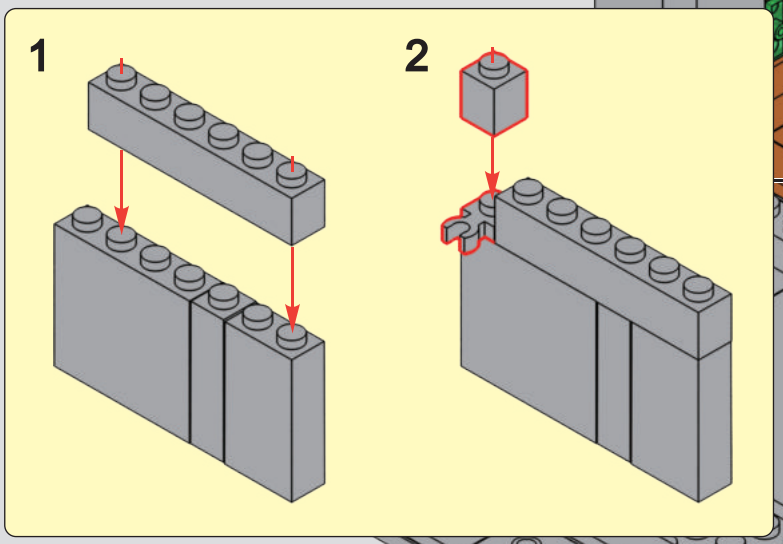

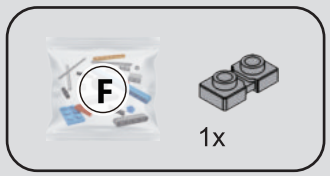

92

1

2



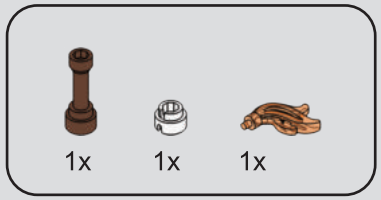

93

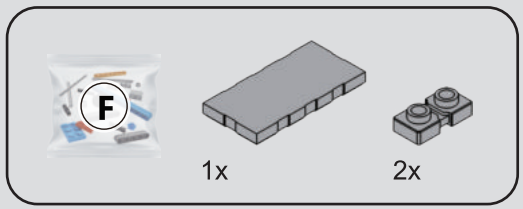

94

1

2

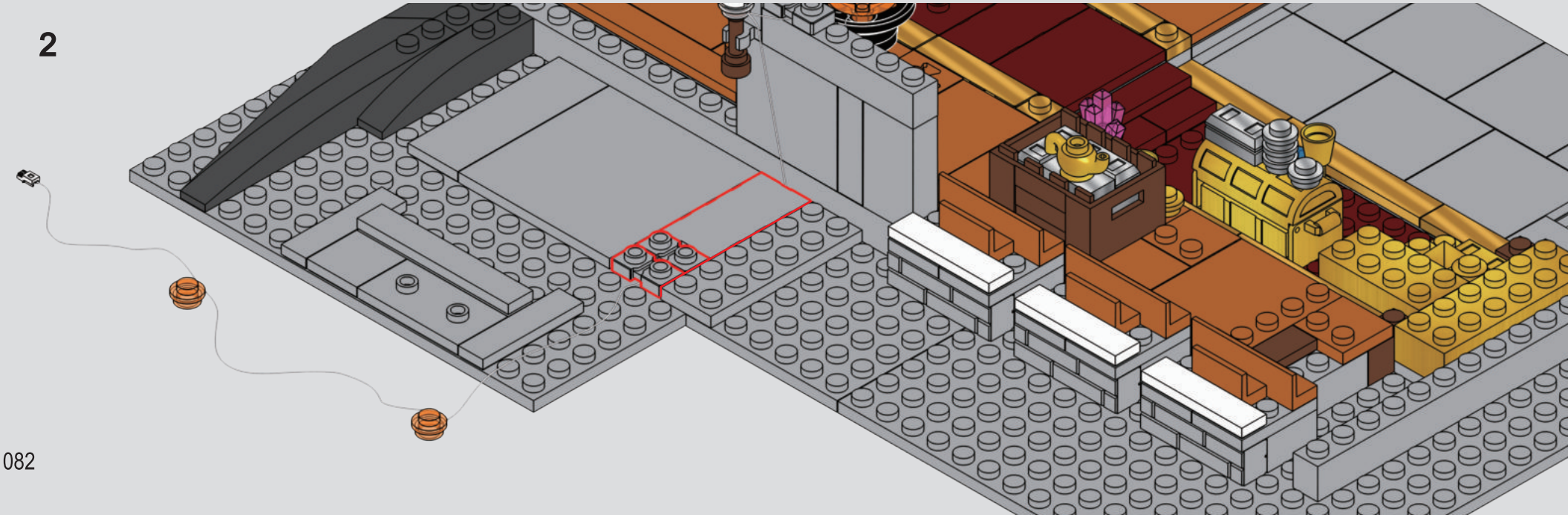

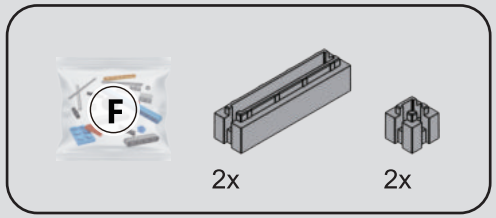

95

1

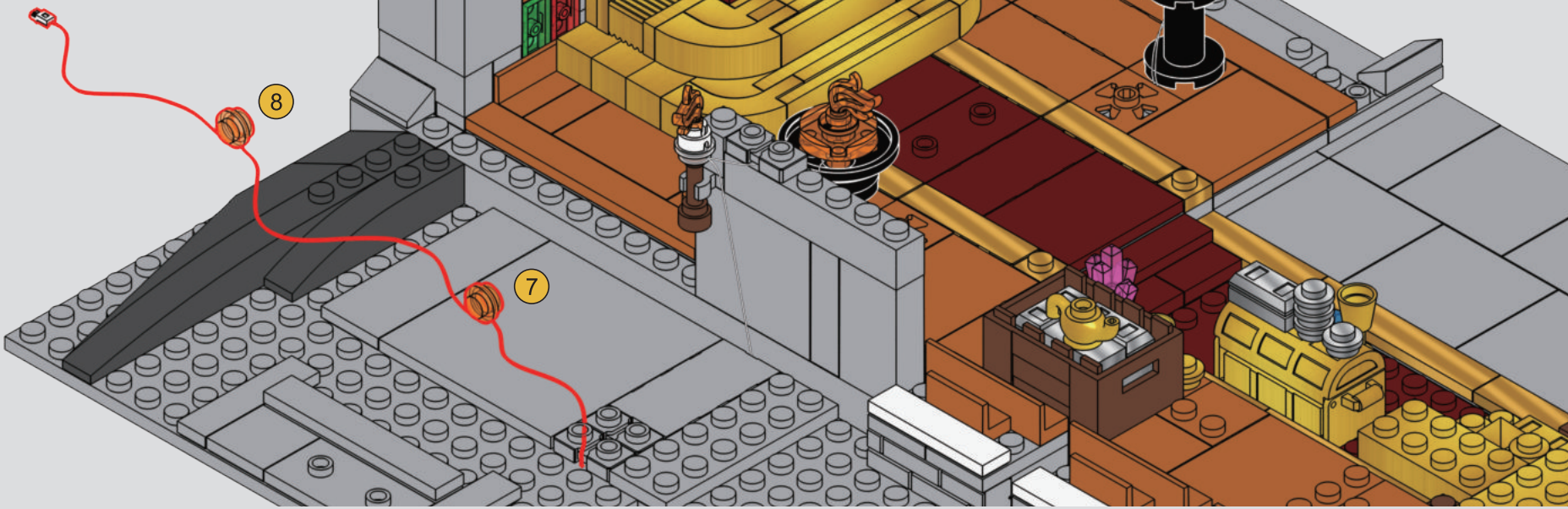

2

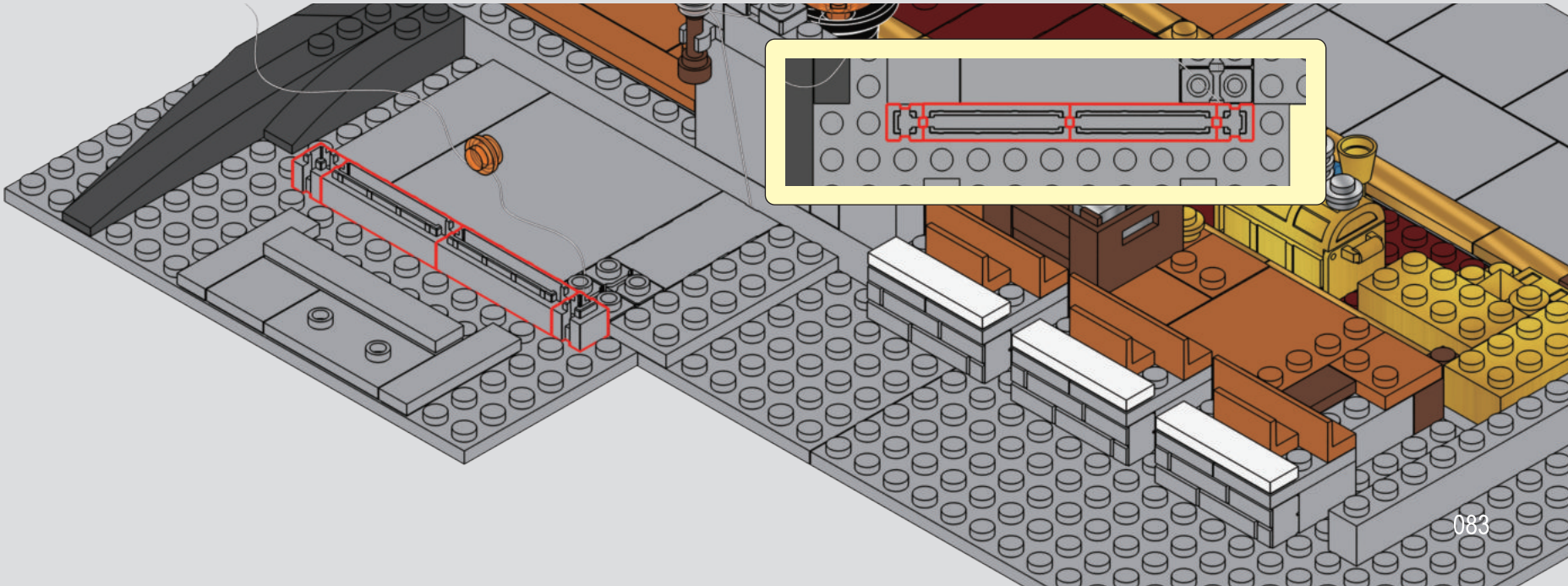

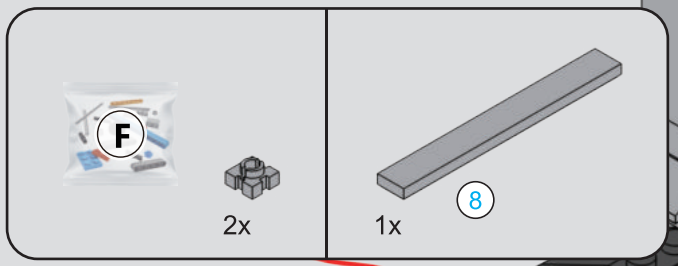

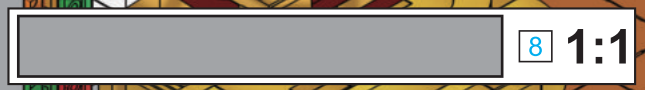

96

1

2

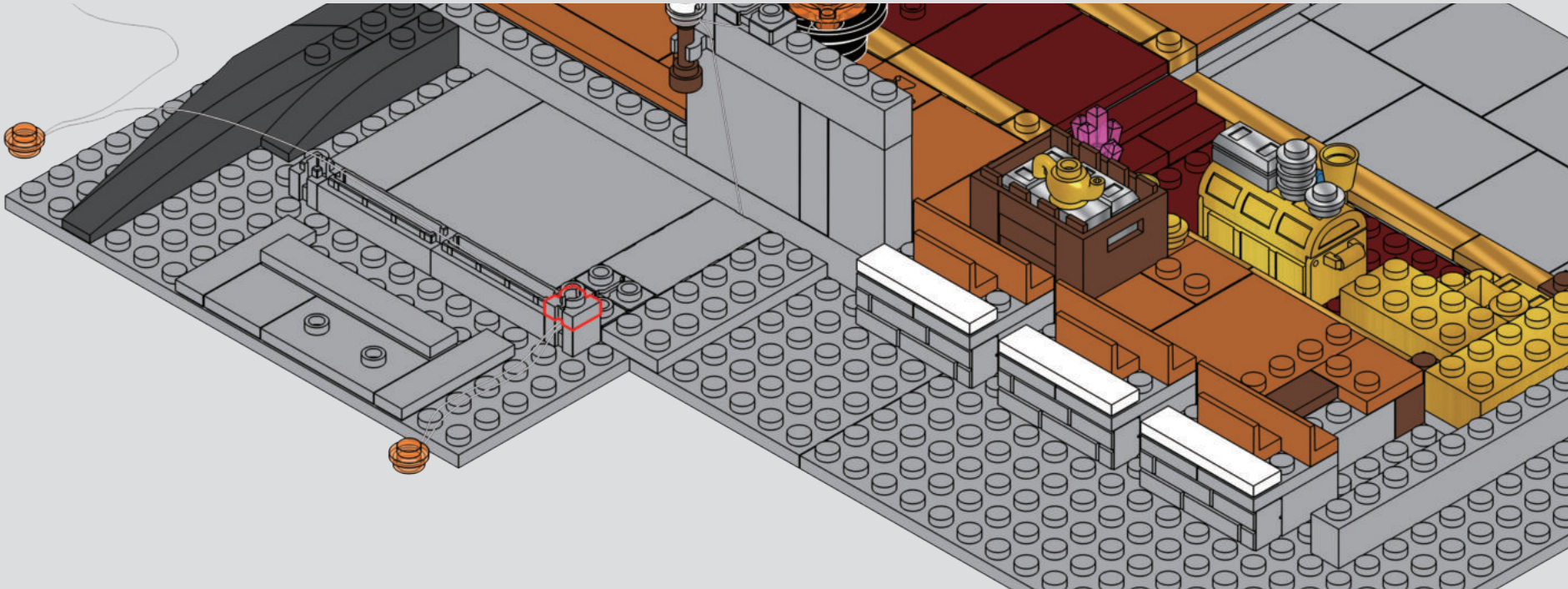

3

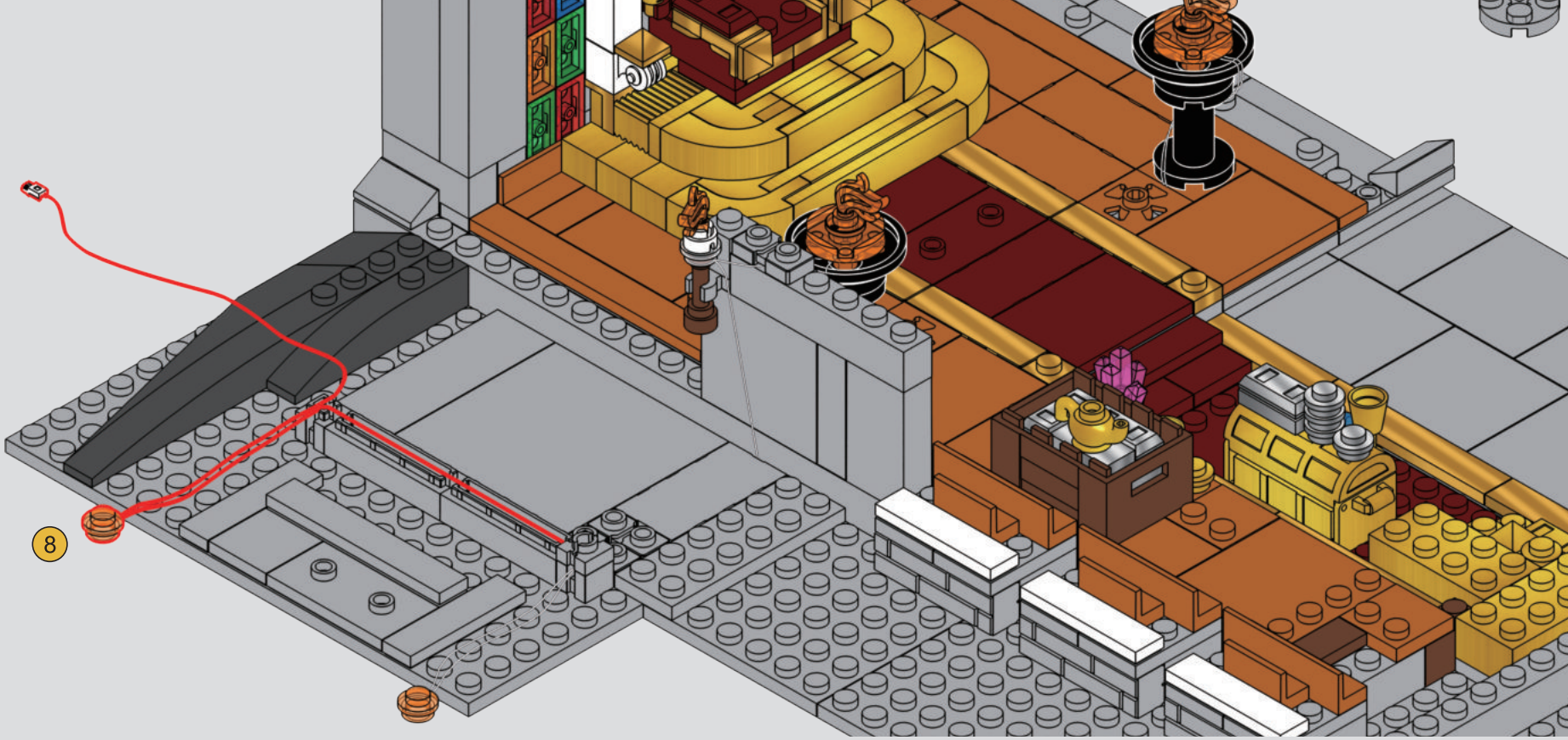

4

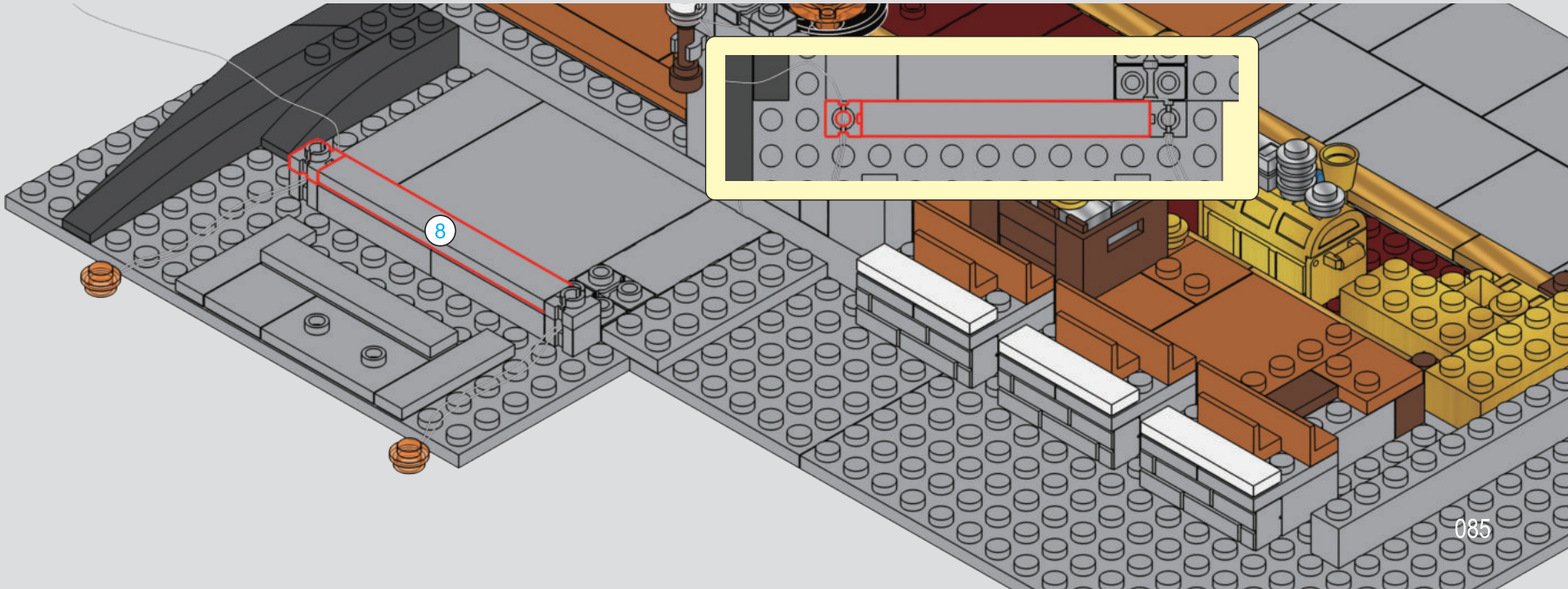

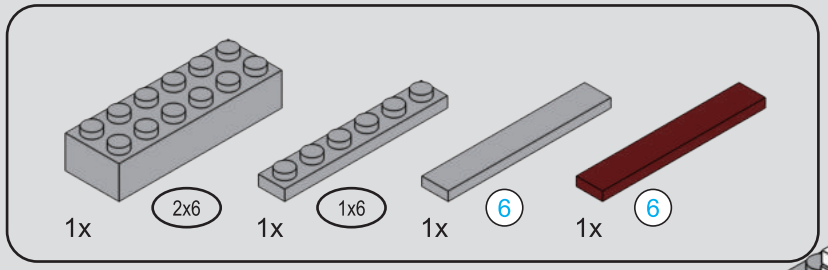



97

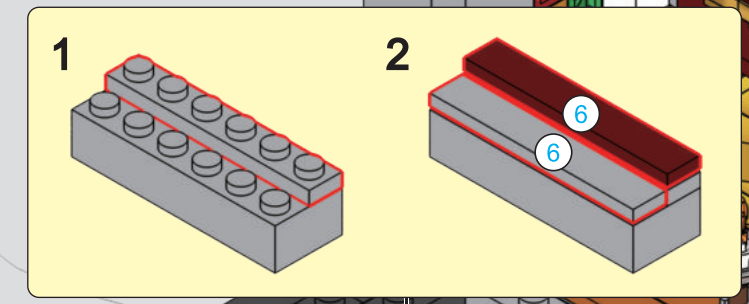

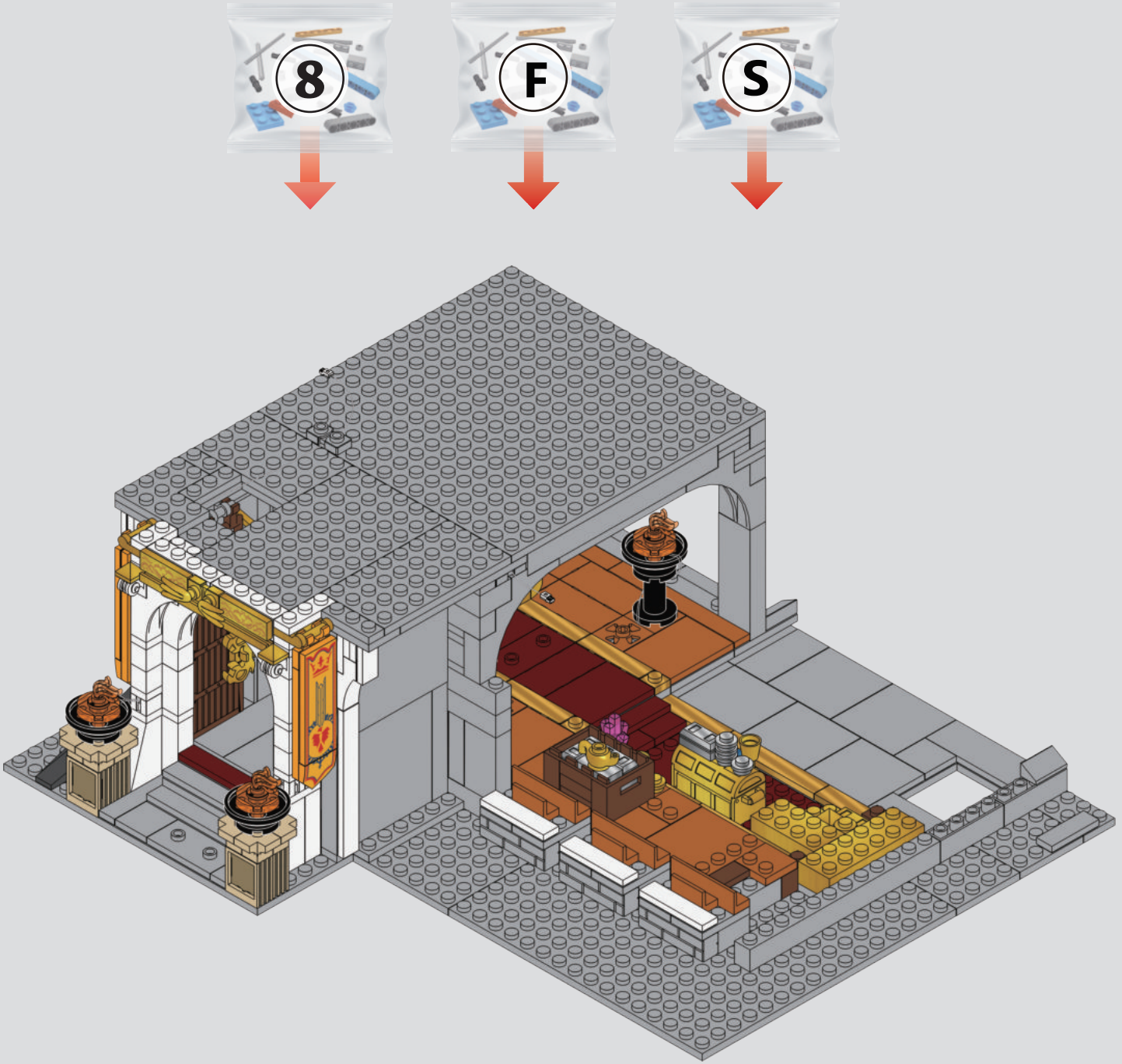
8
F
S

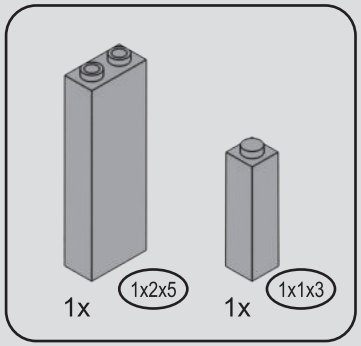

98

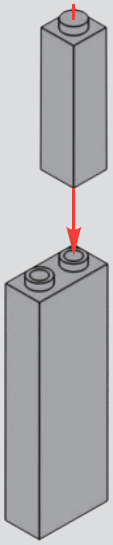

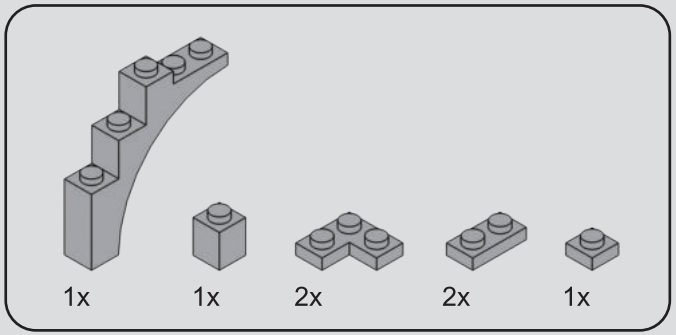

99

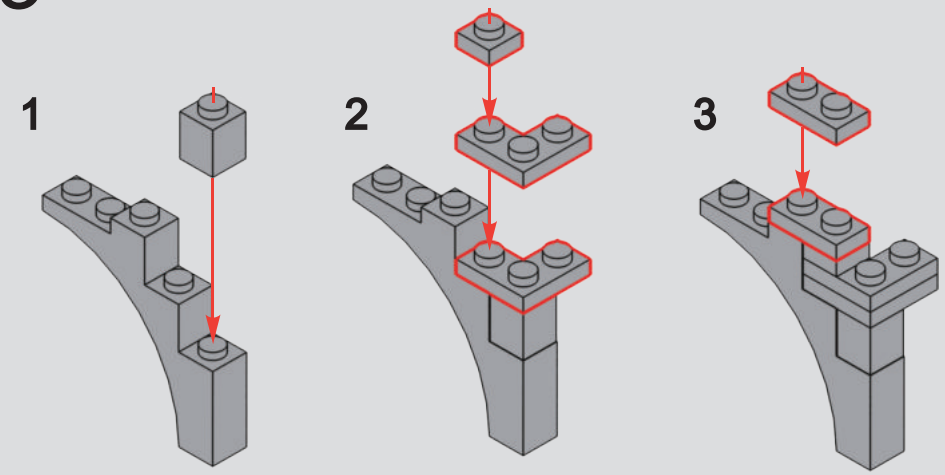

100

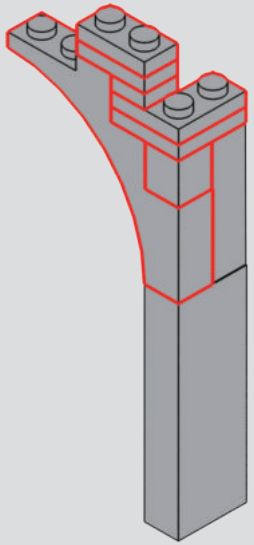

101



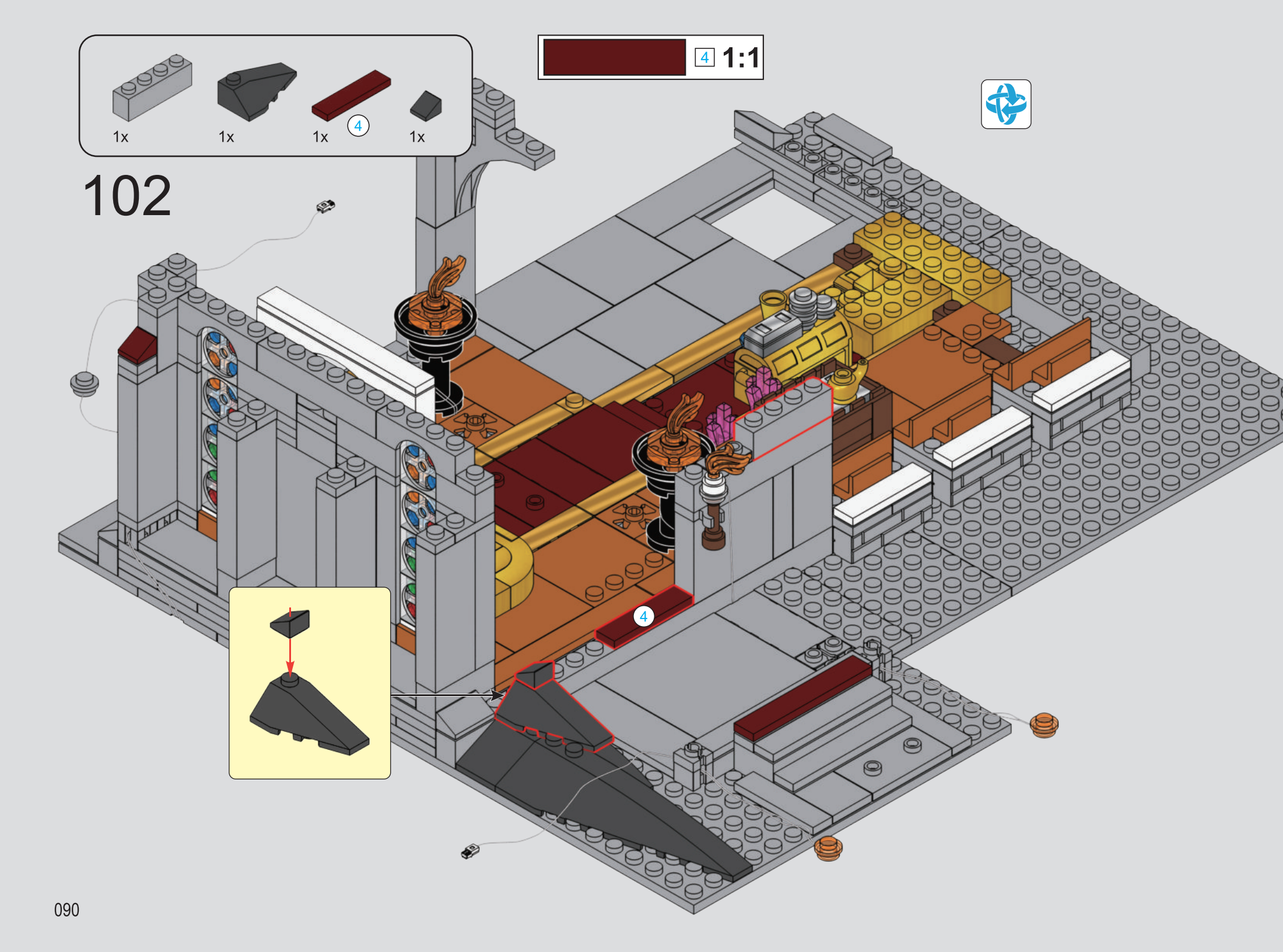
1x
1x
1x
4
1x
4 1:1
102
4
090

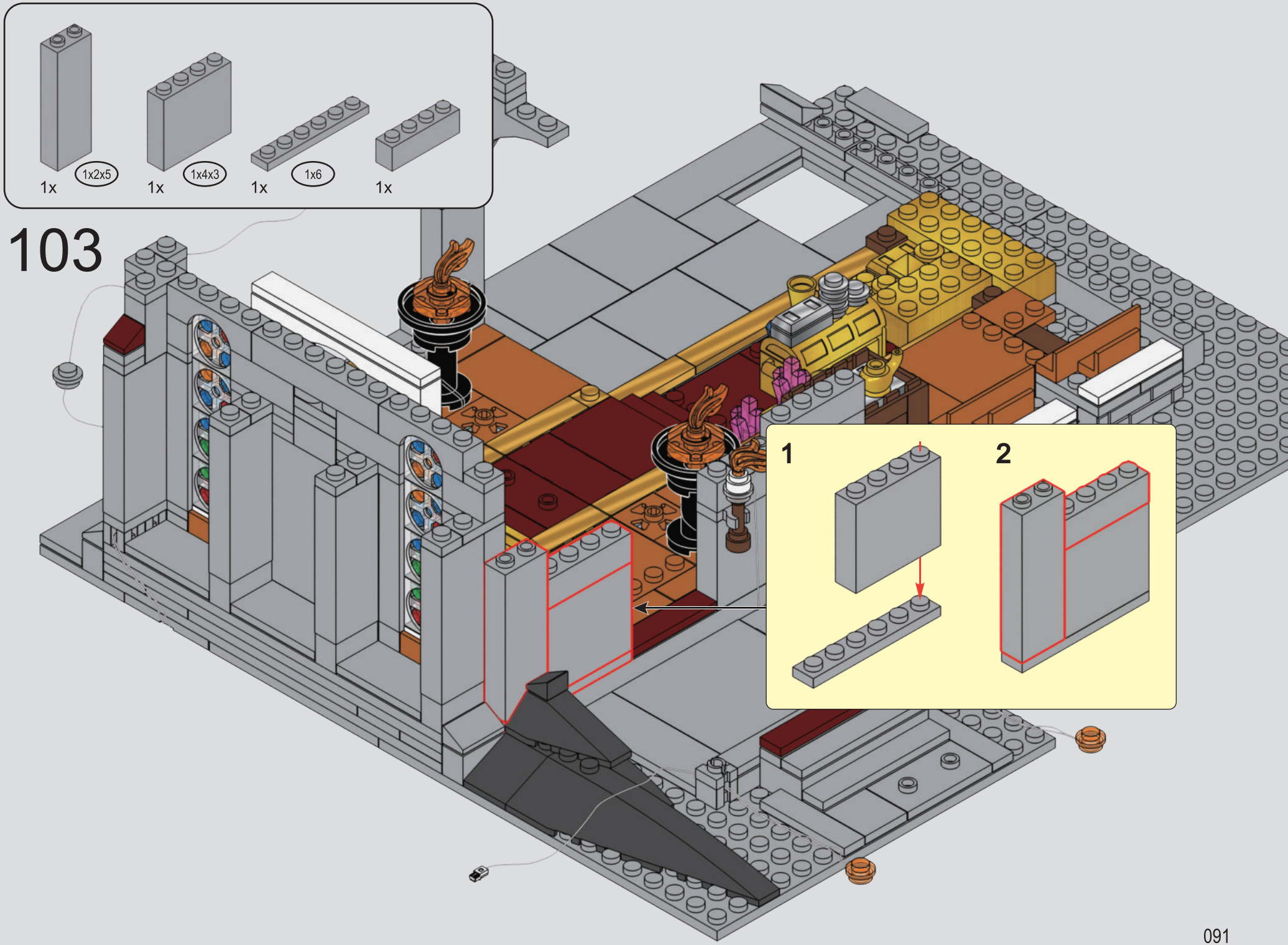
1x
1x2x5
1x
1x4x3
1x
1x6
1x
103
1
2

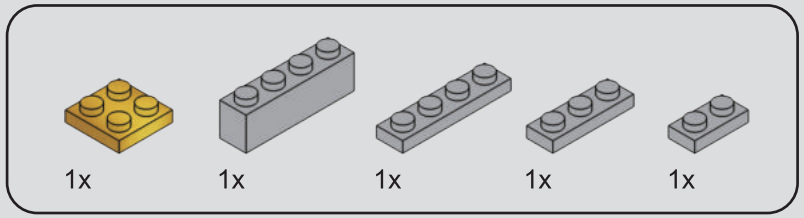

104

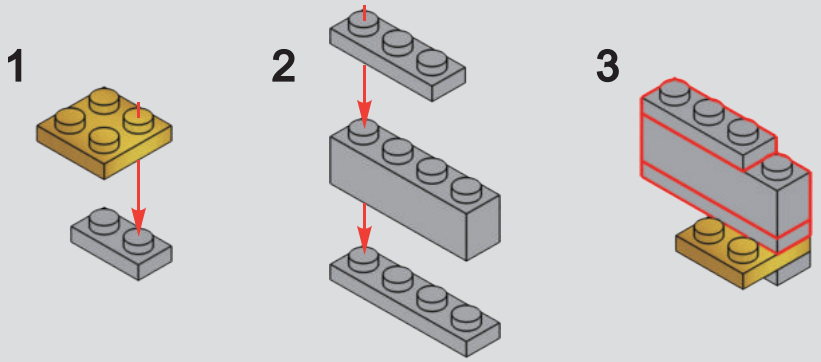

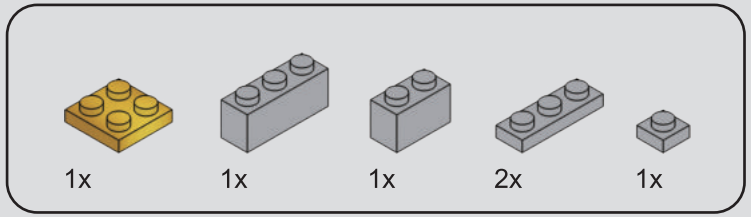

105

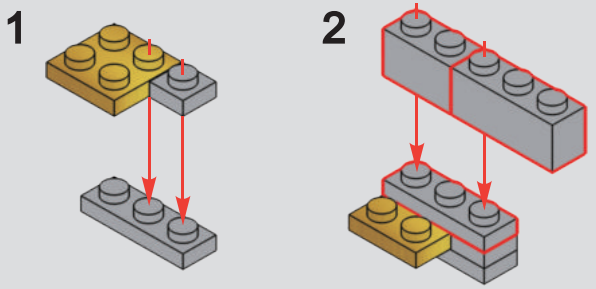

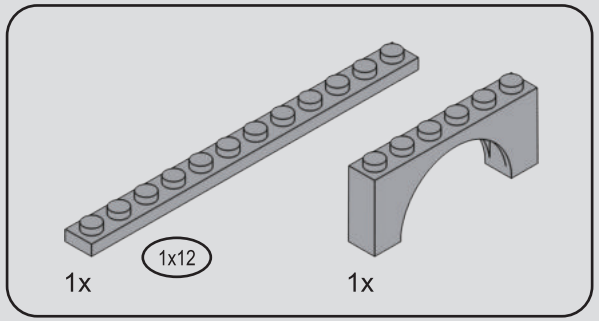

106

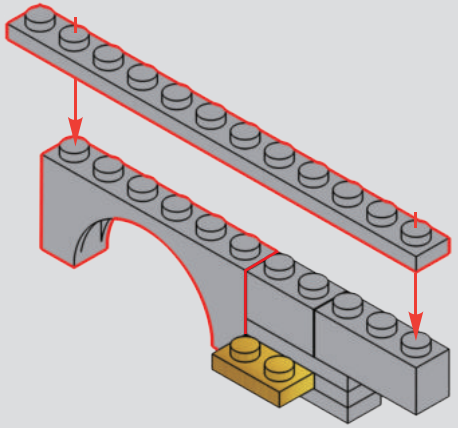

107

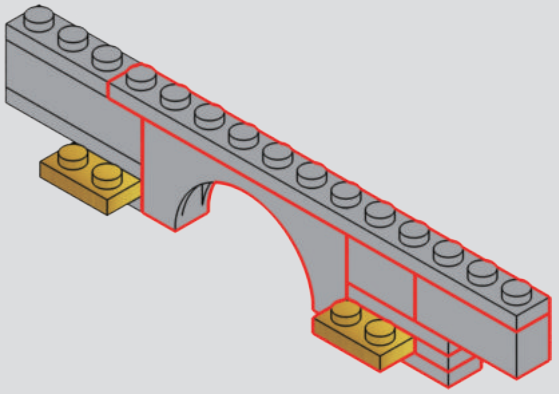

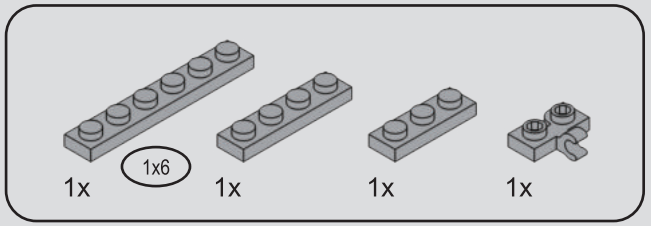

108

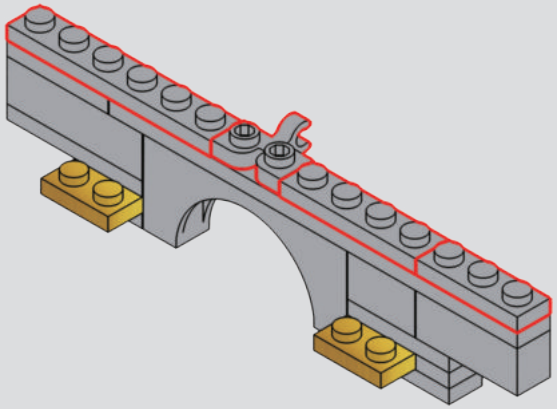

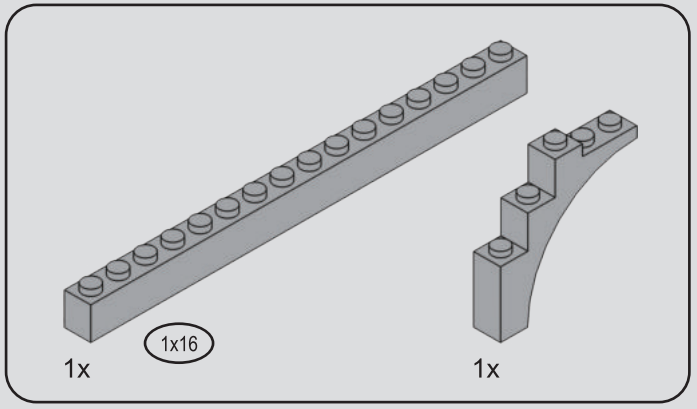

109

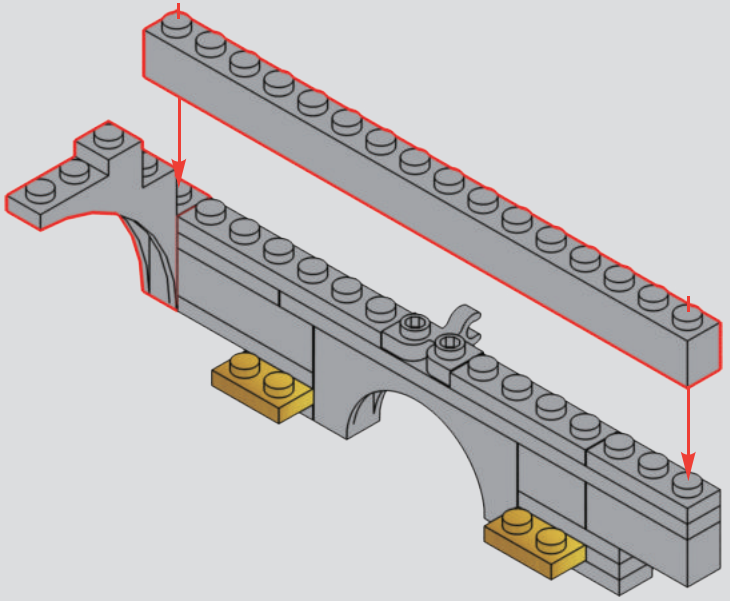

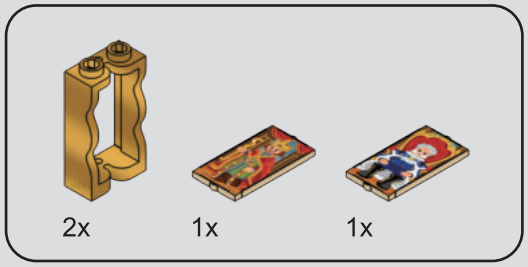

110

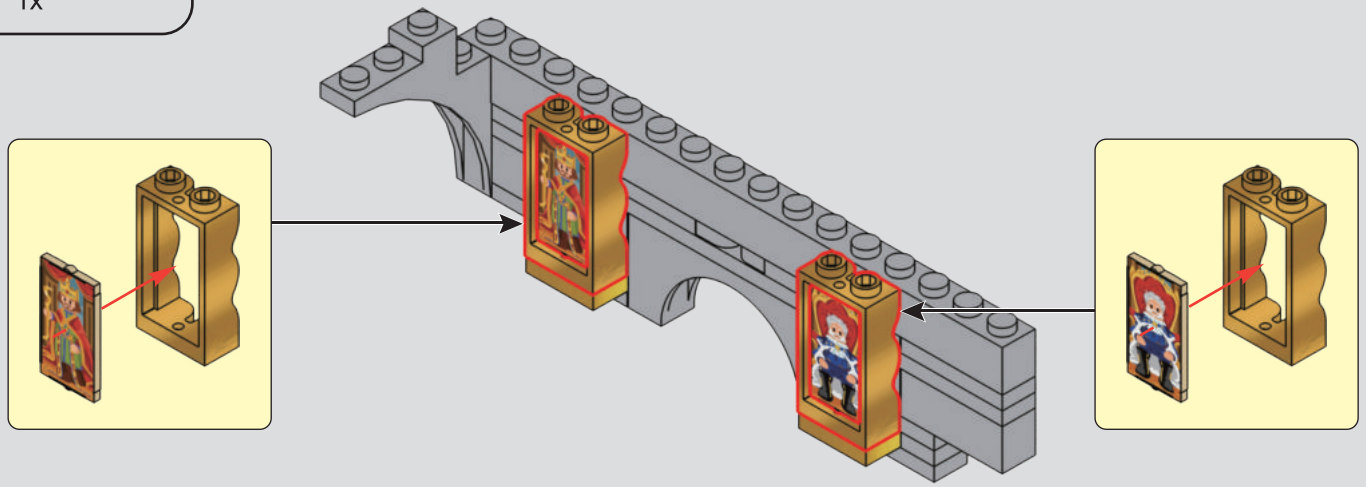

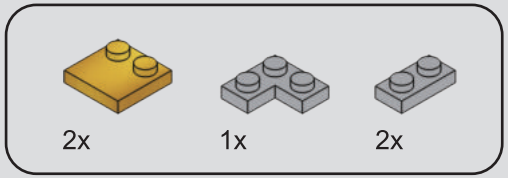

111

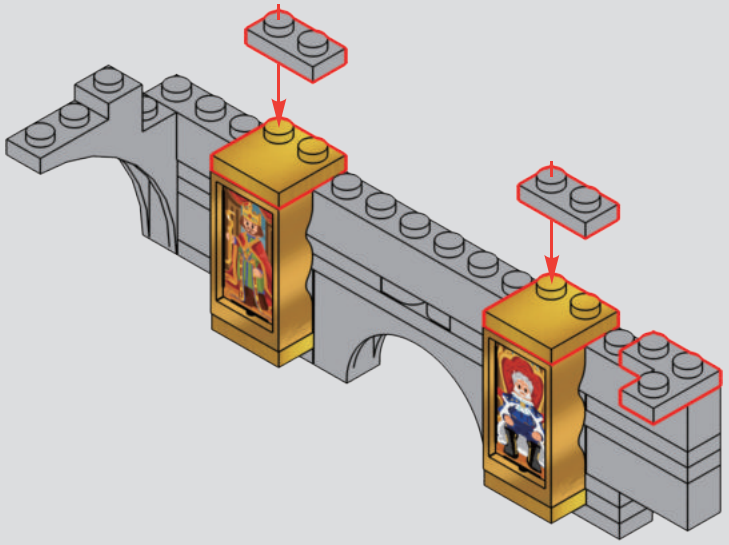

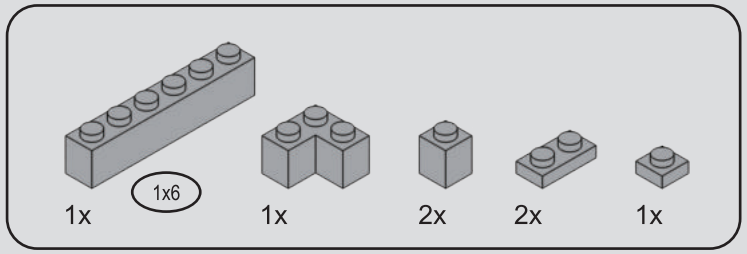

112

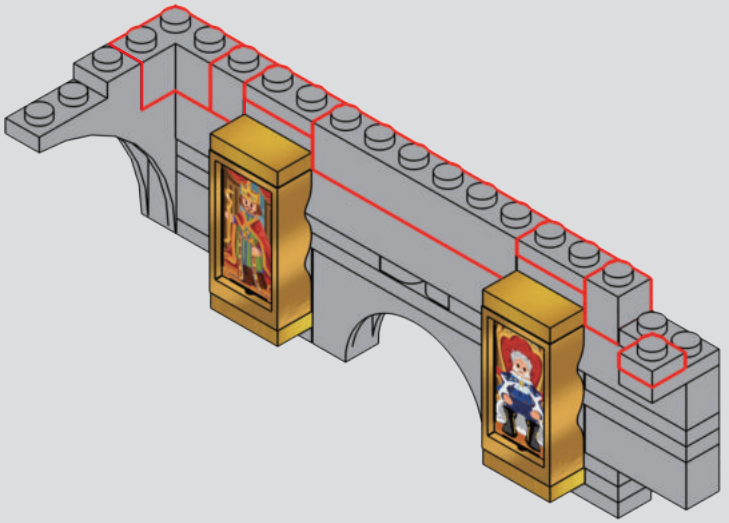

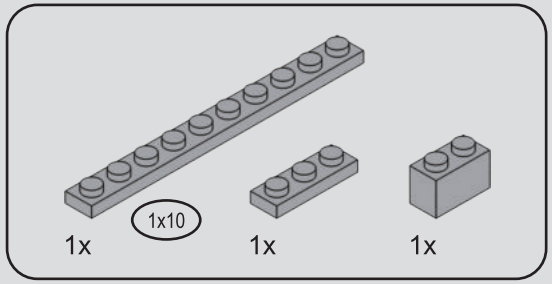

113

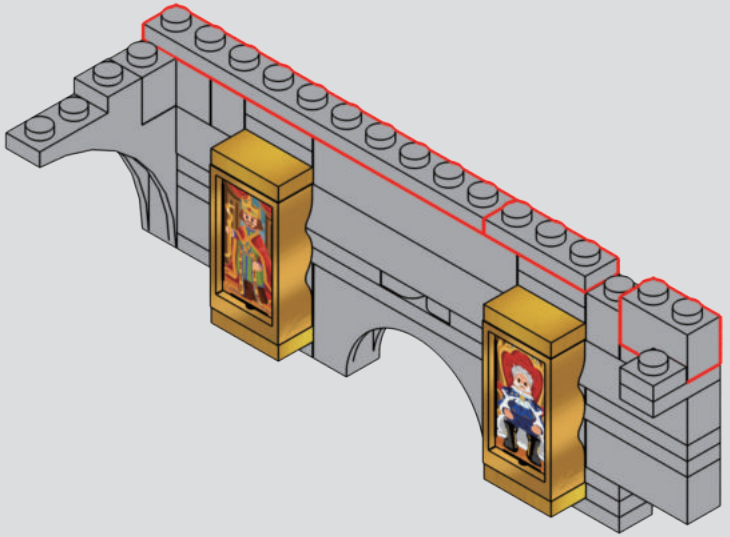

114

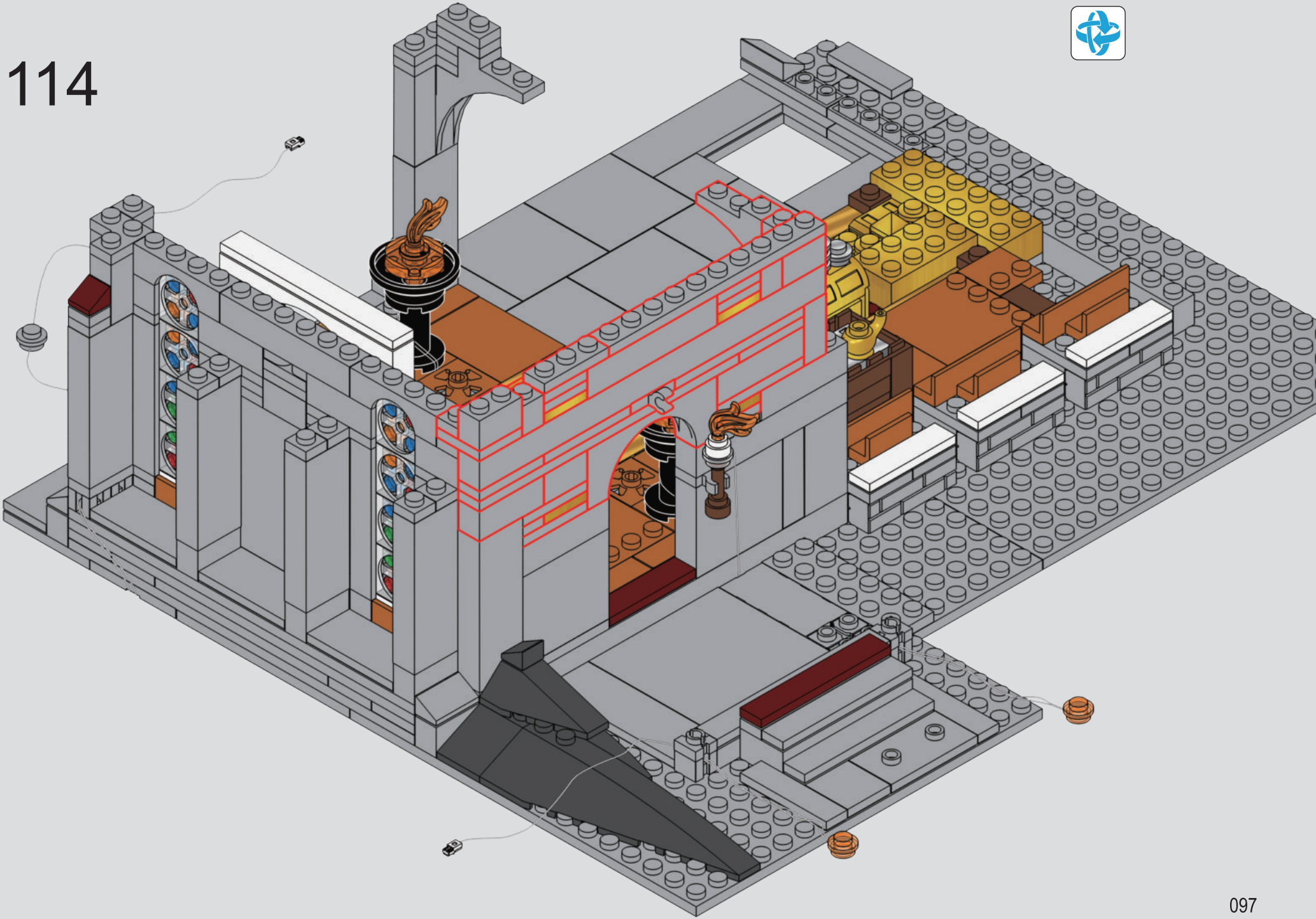

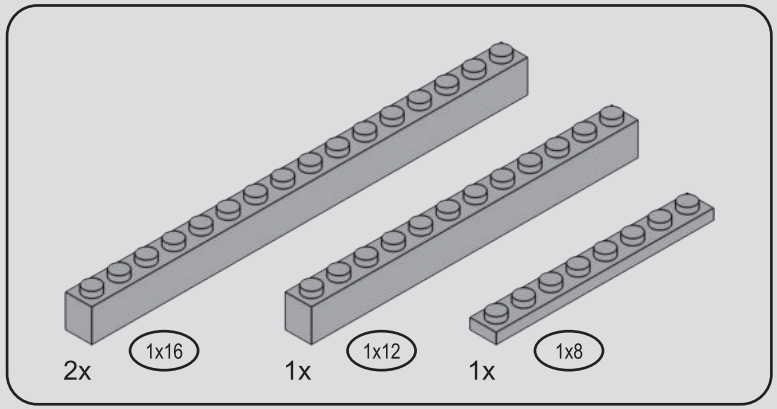

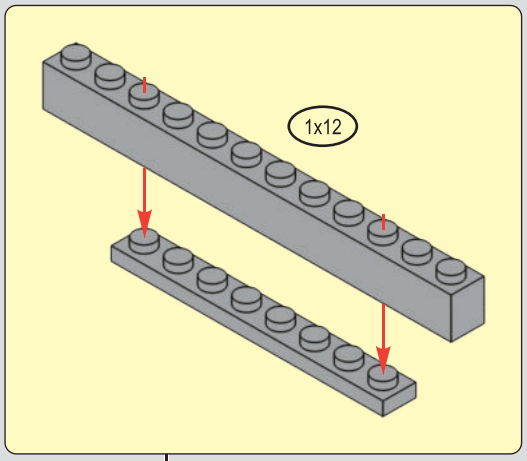

115

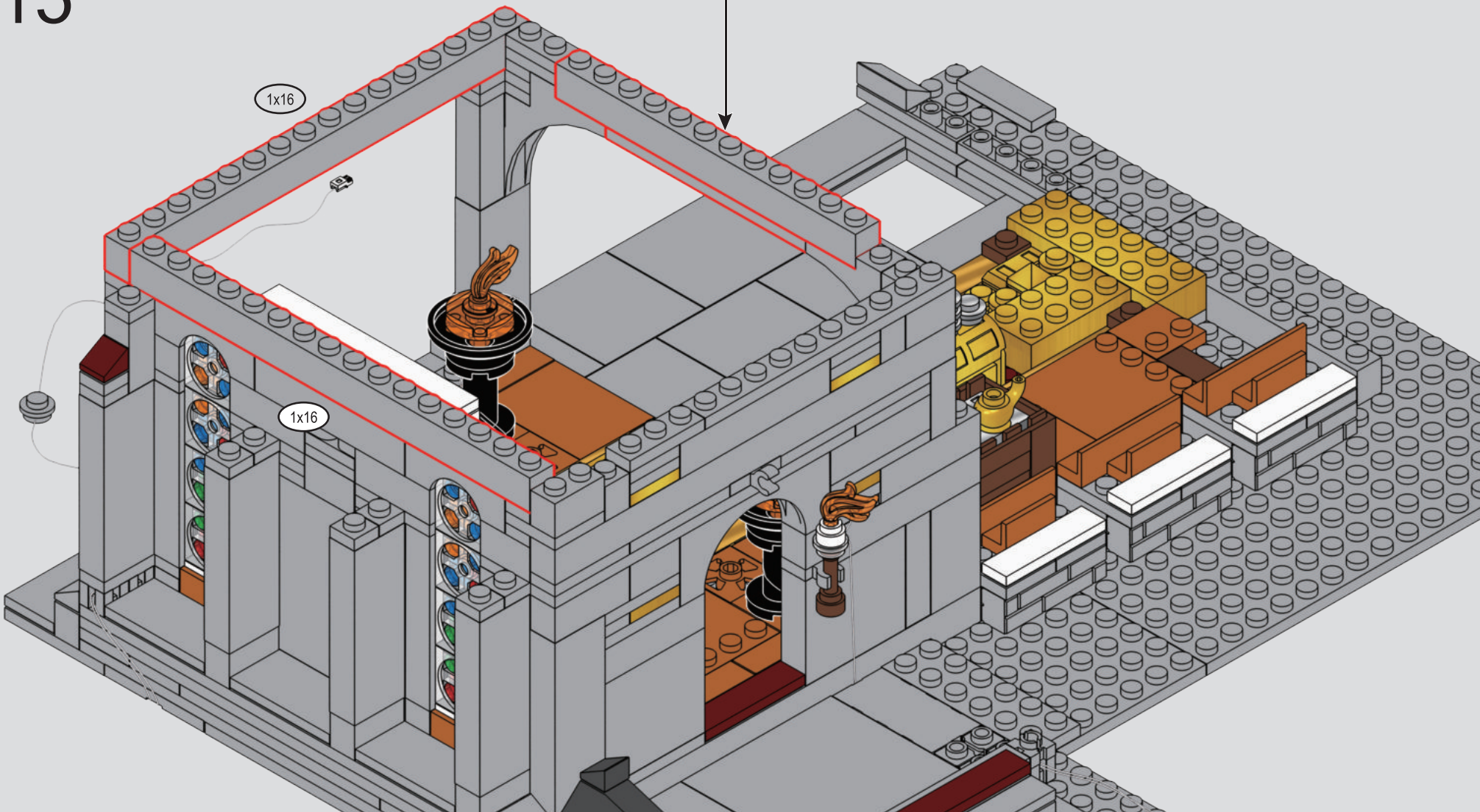

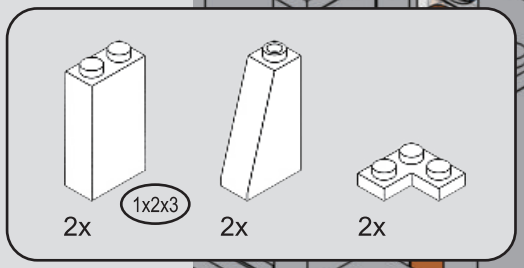

116

1

2

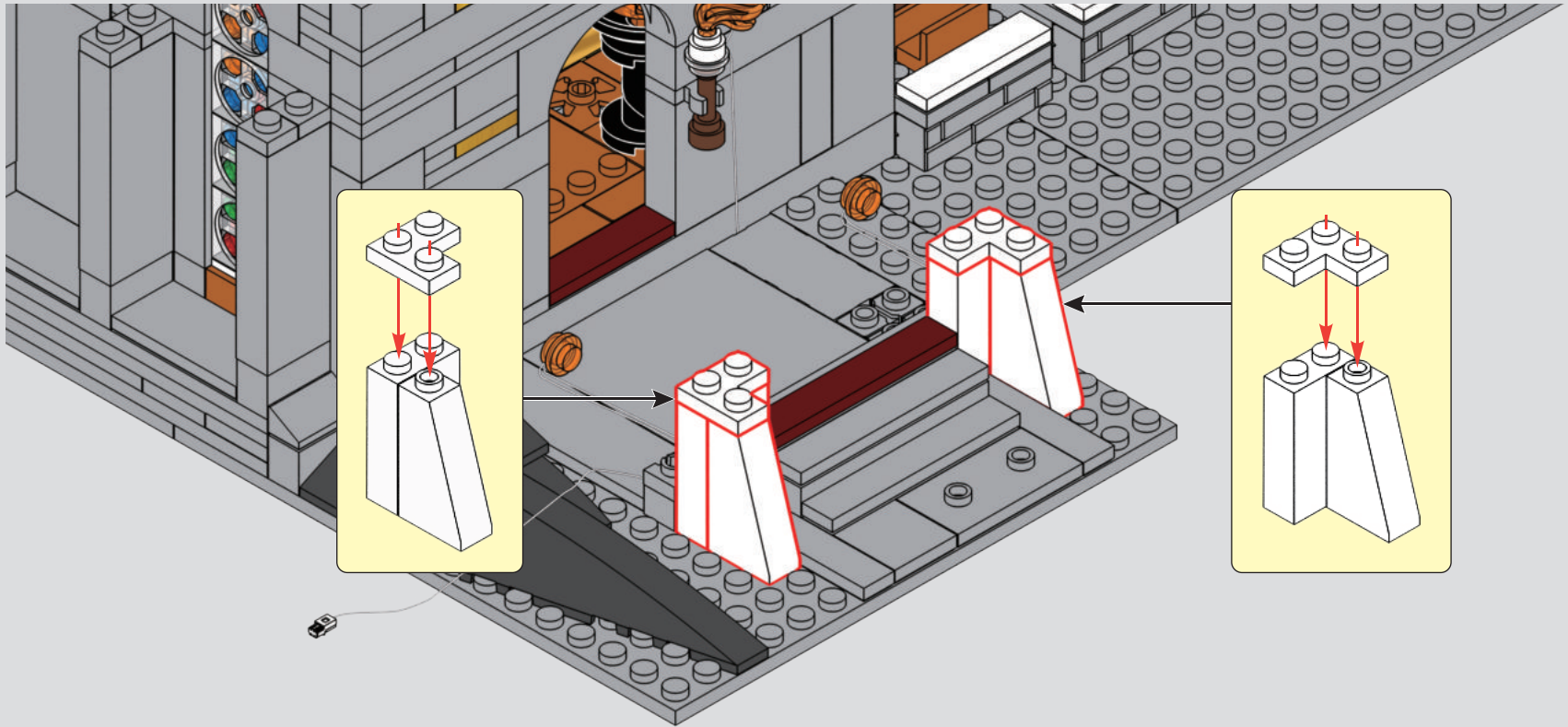

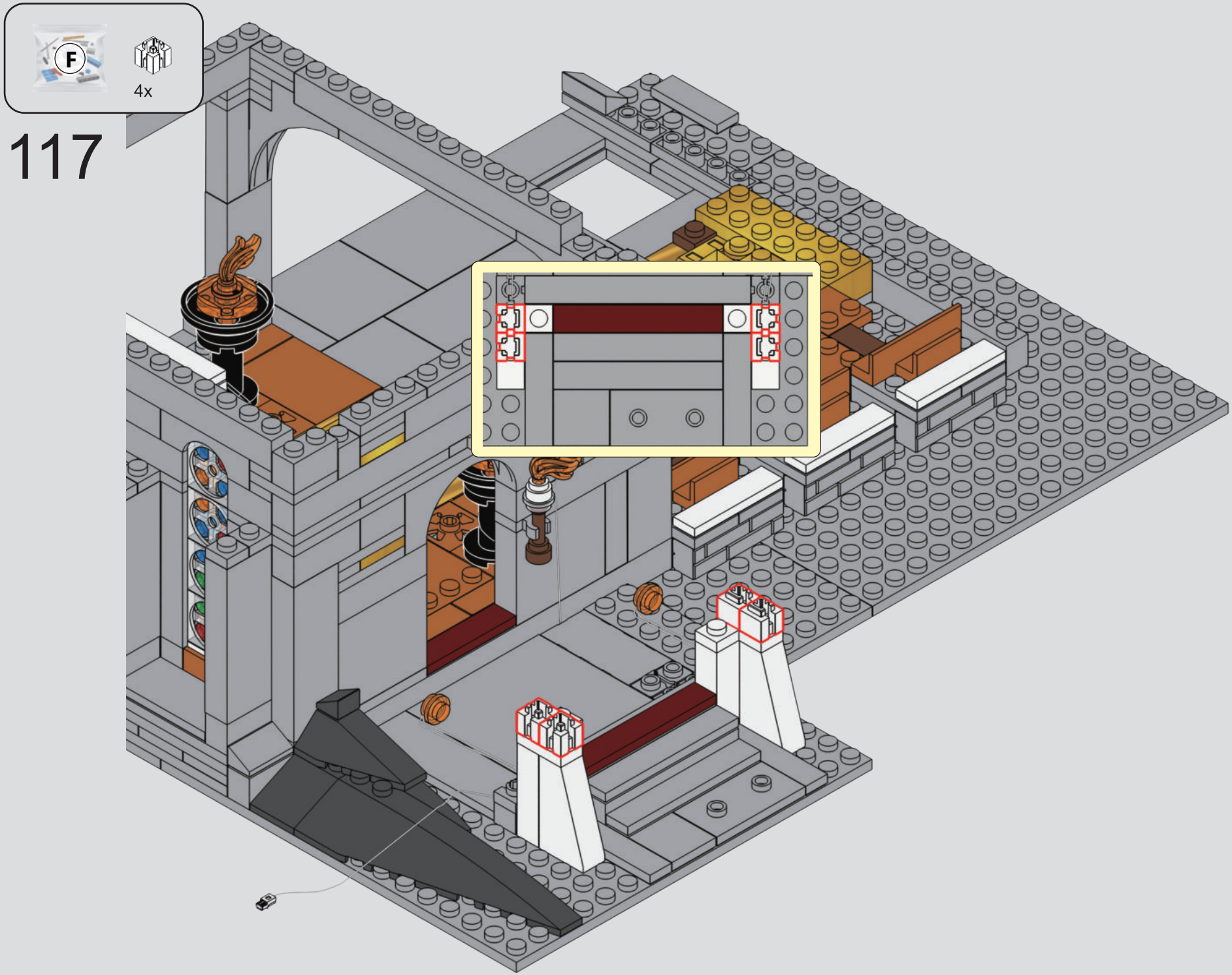

117

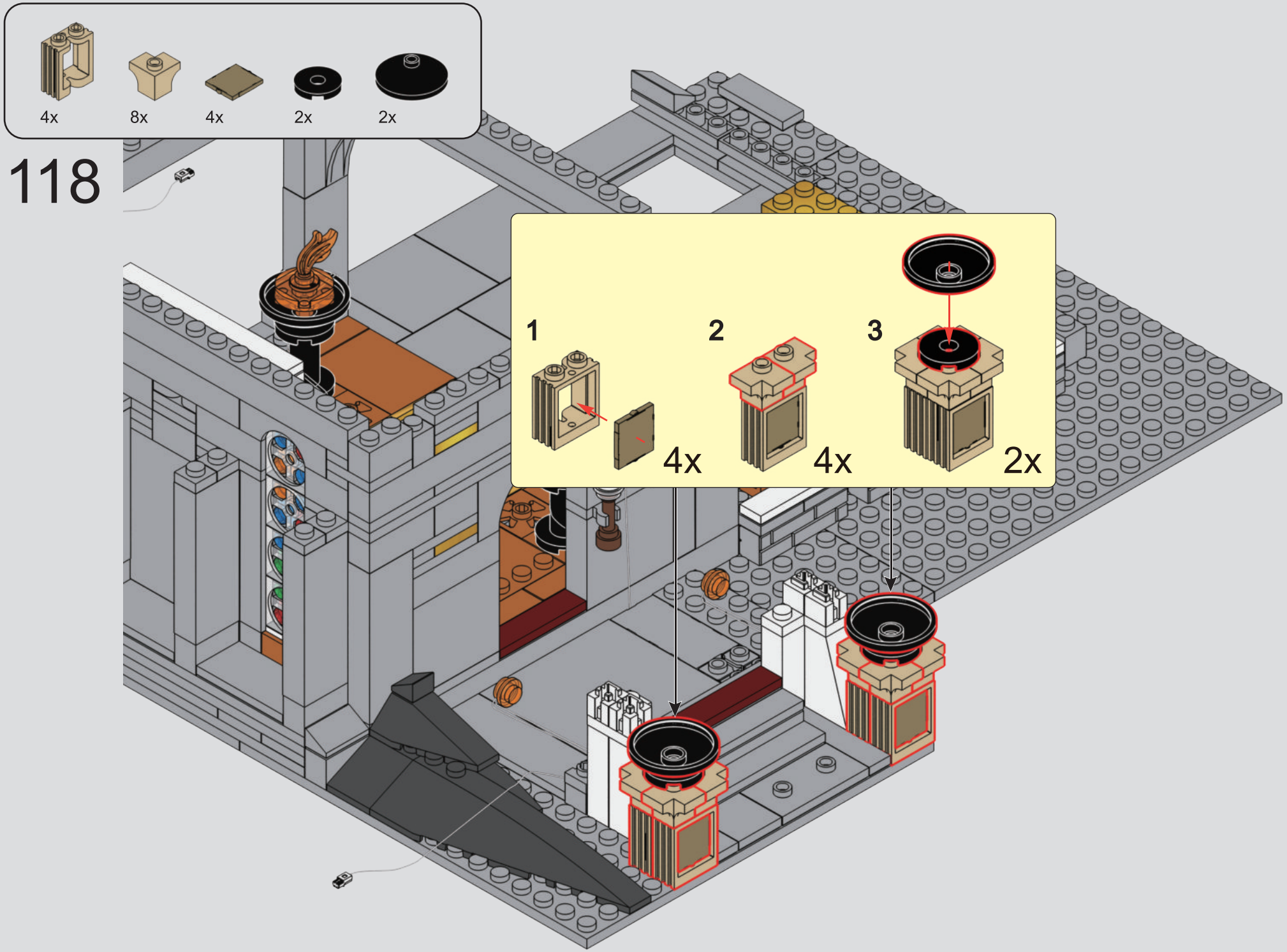
4x
8x
4x
2x
2x
118
1
4x
2
4x
3
2x

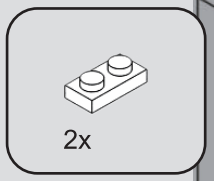

119

1

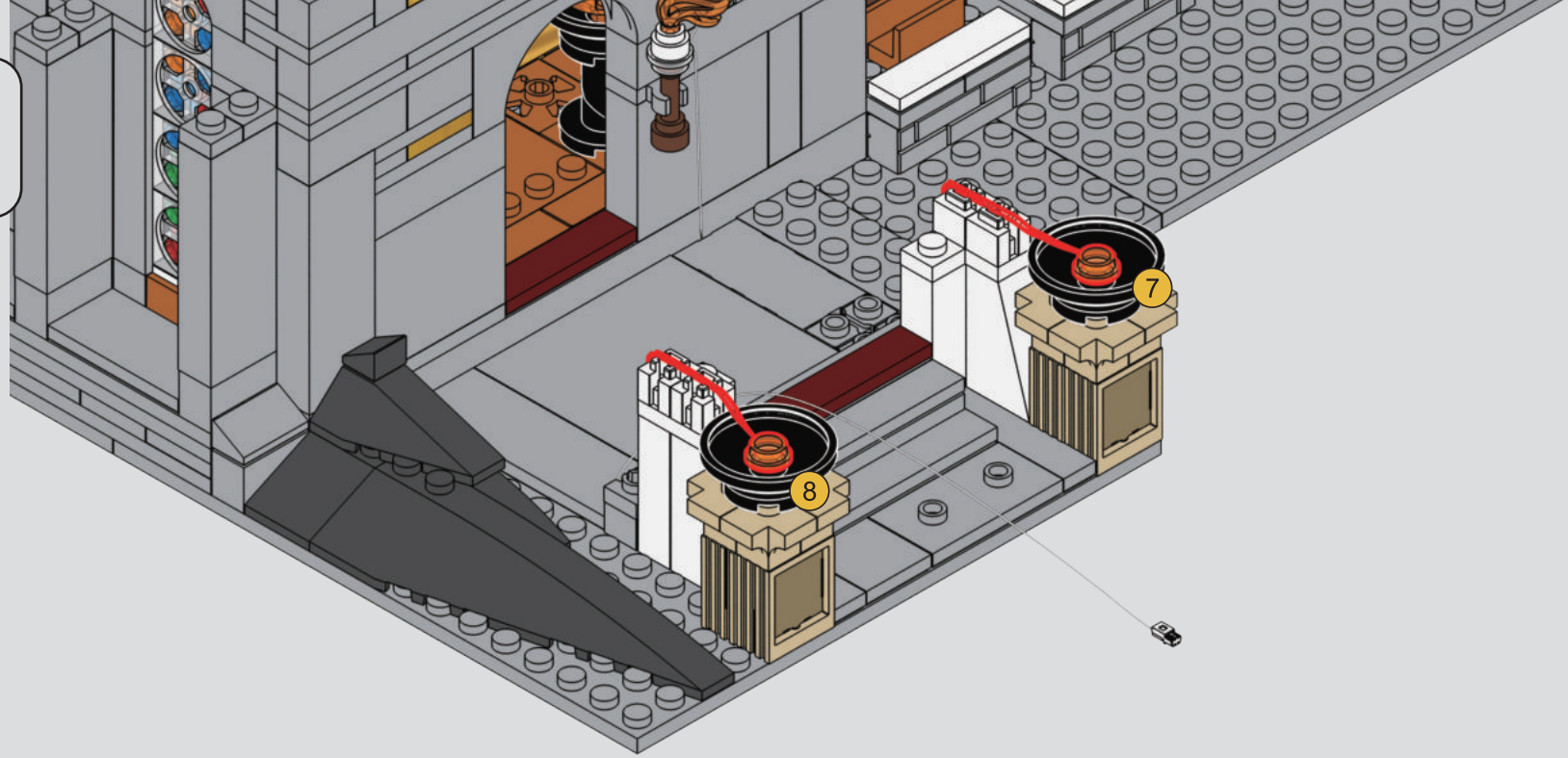

2

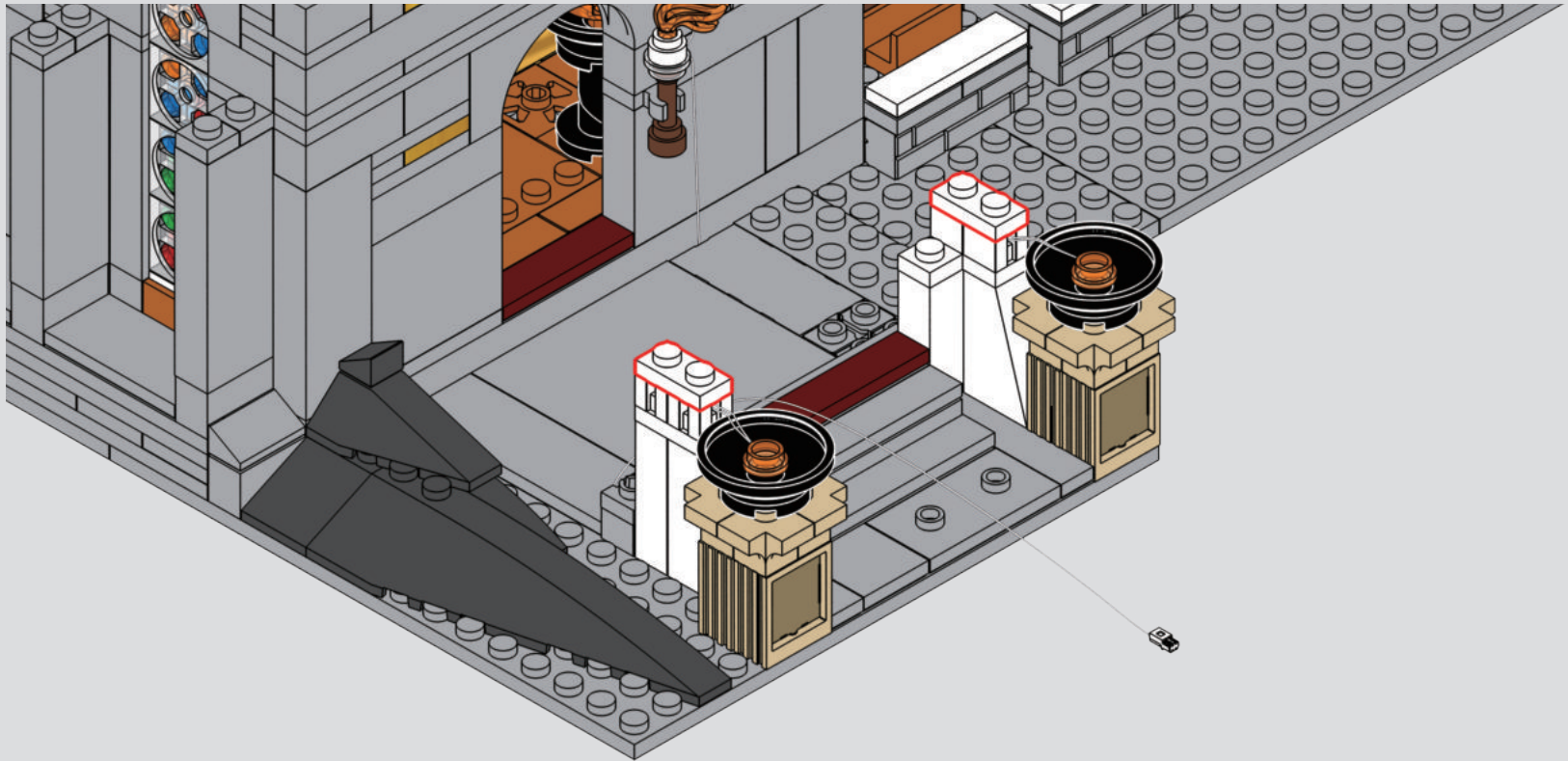

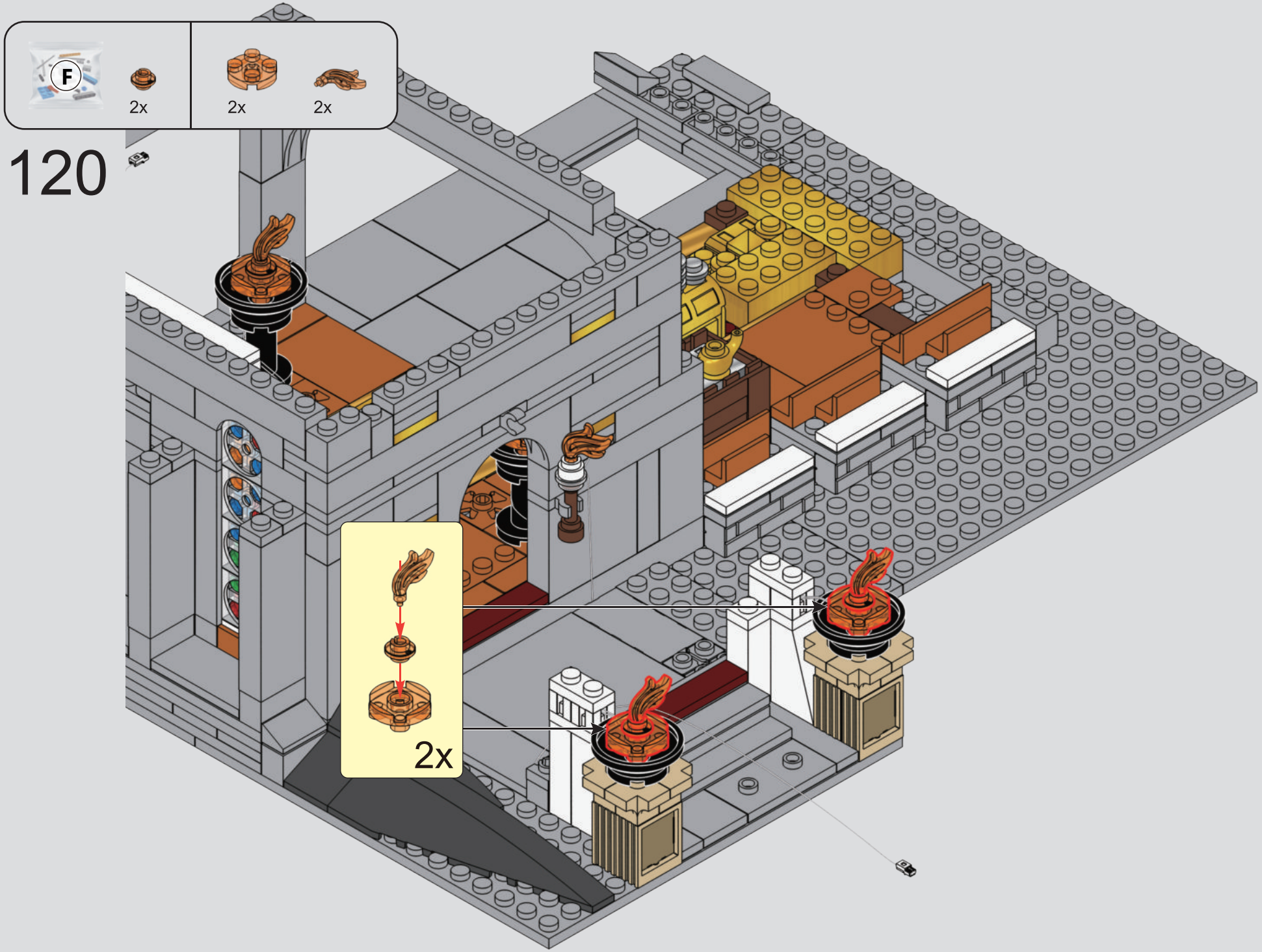

120

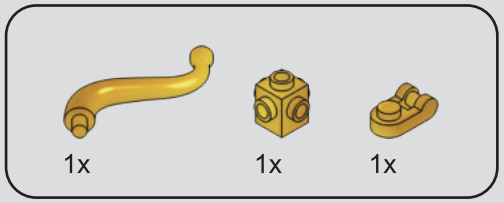

121

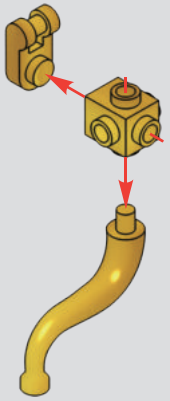

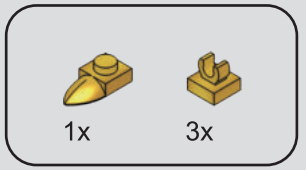

122



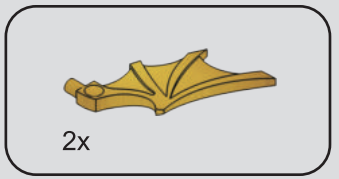

123

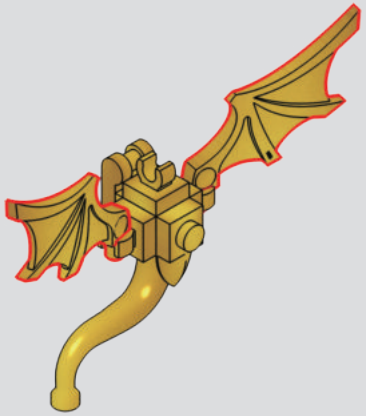

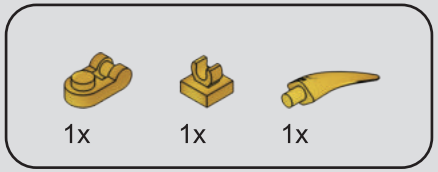

124

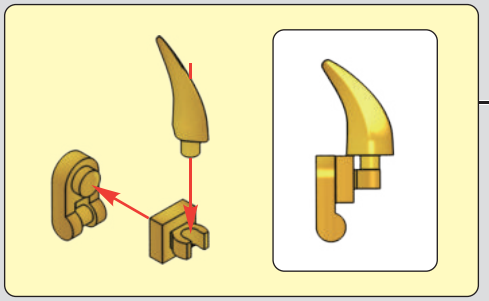

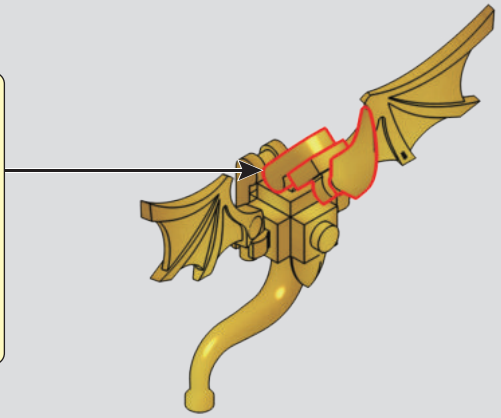

125

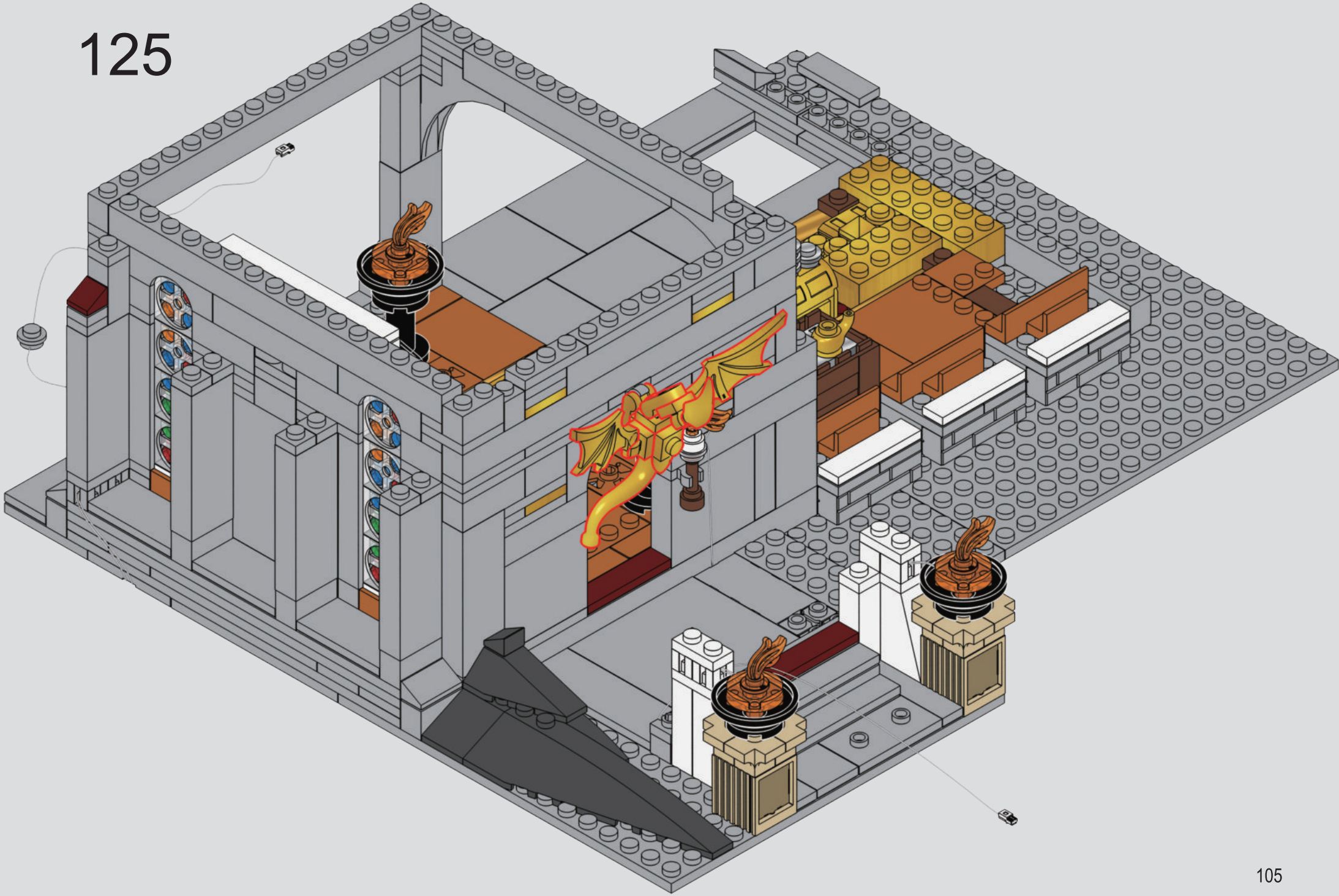

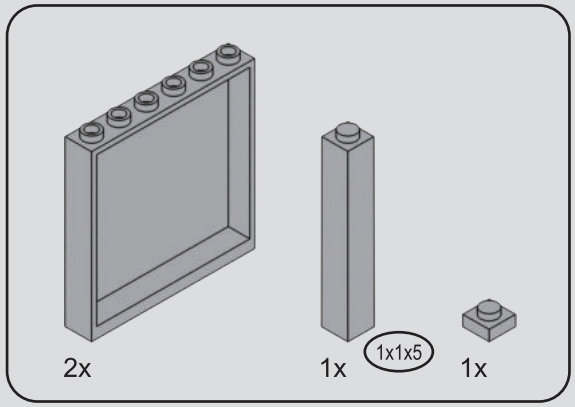

126

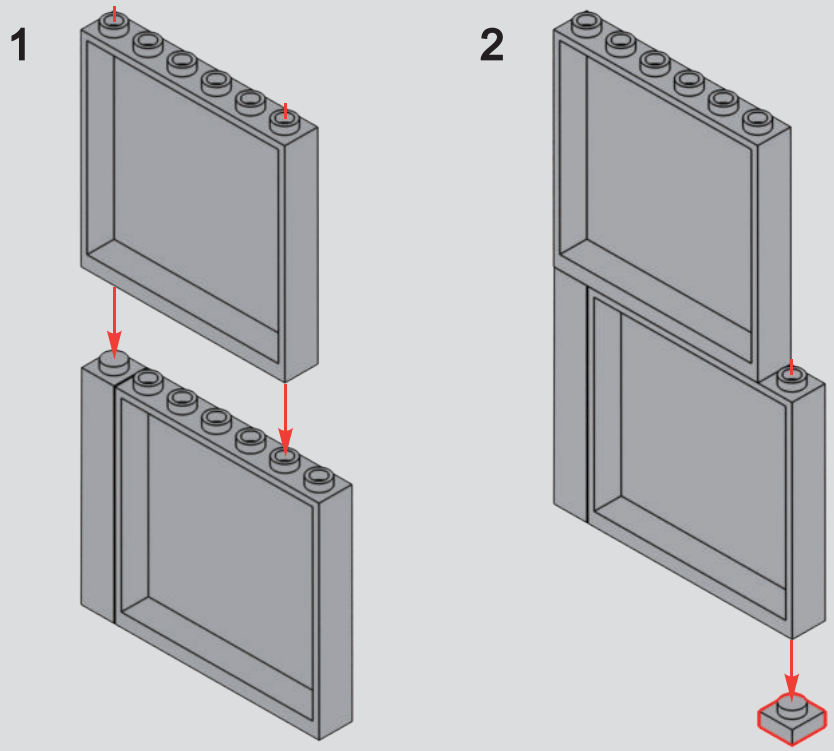

127

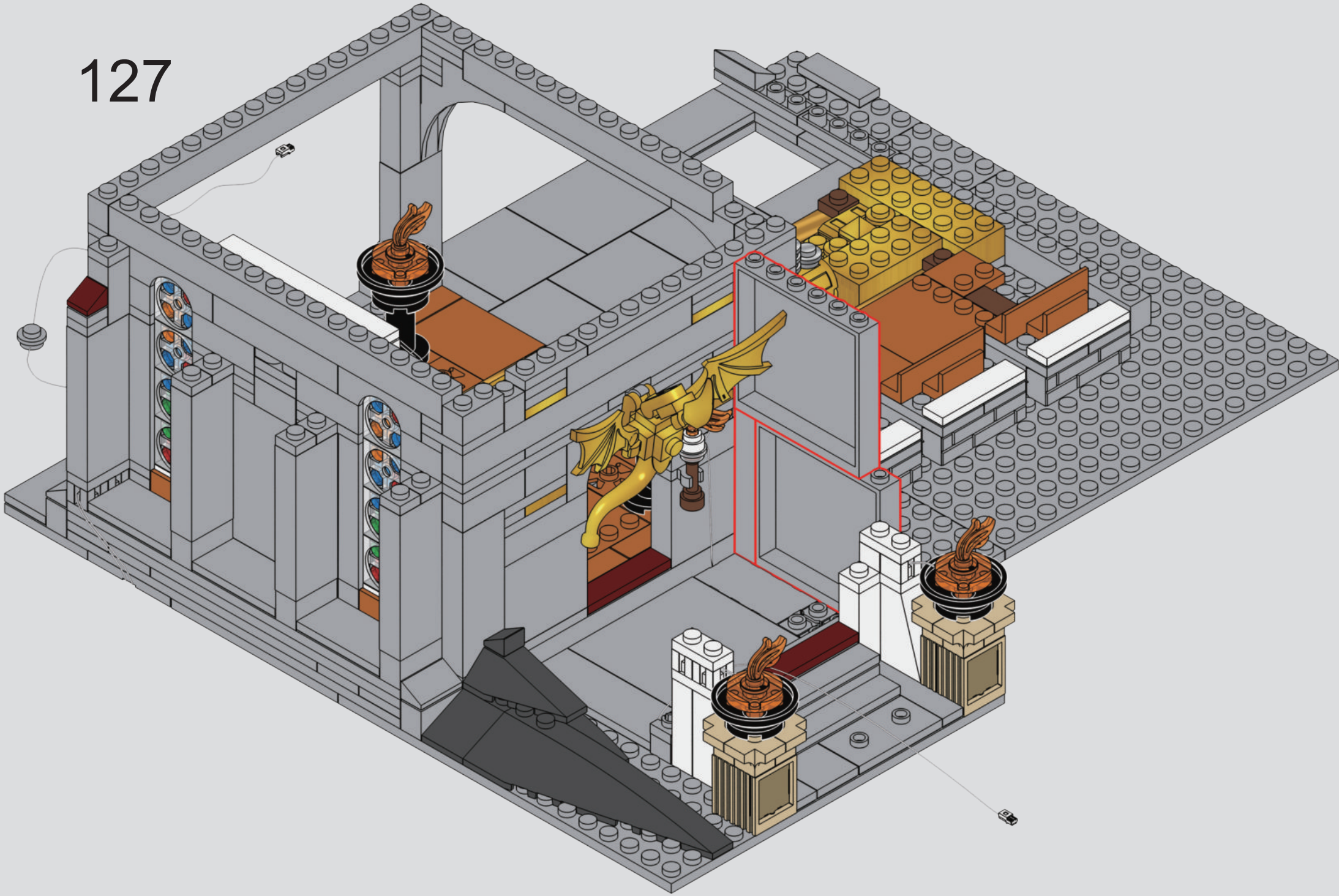

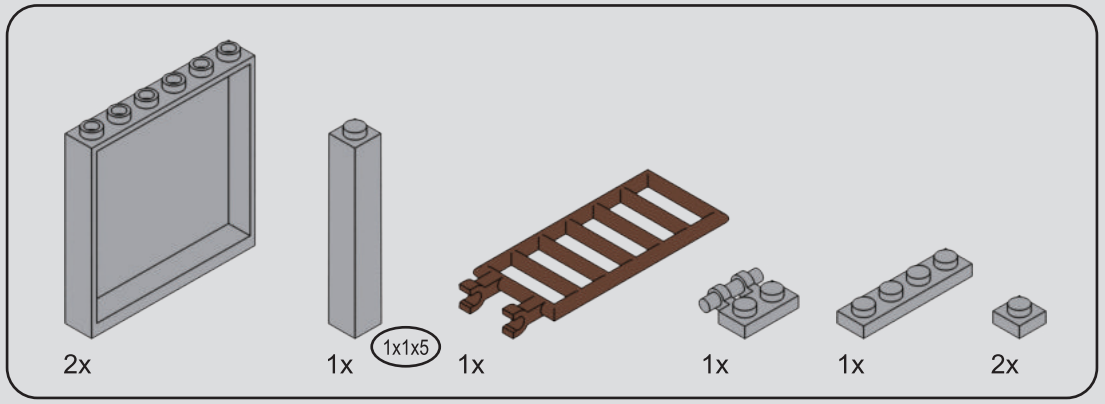

128

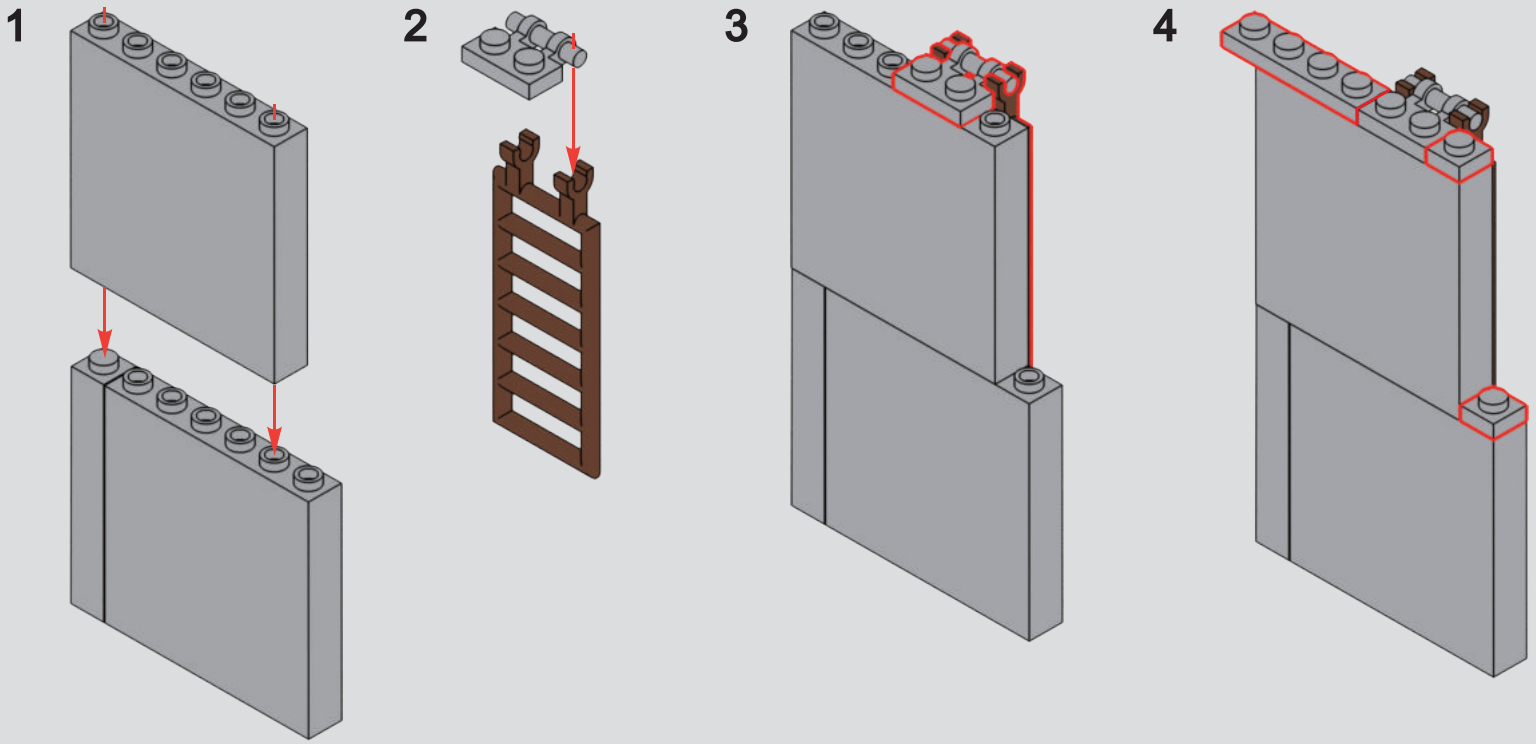

129

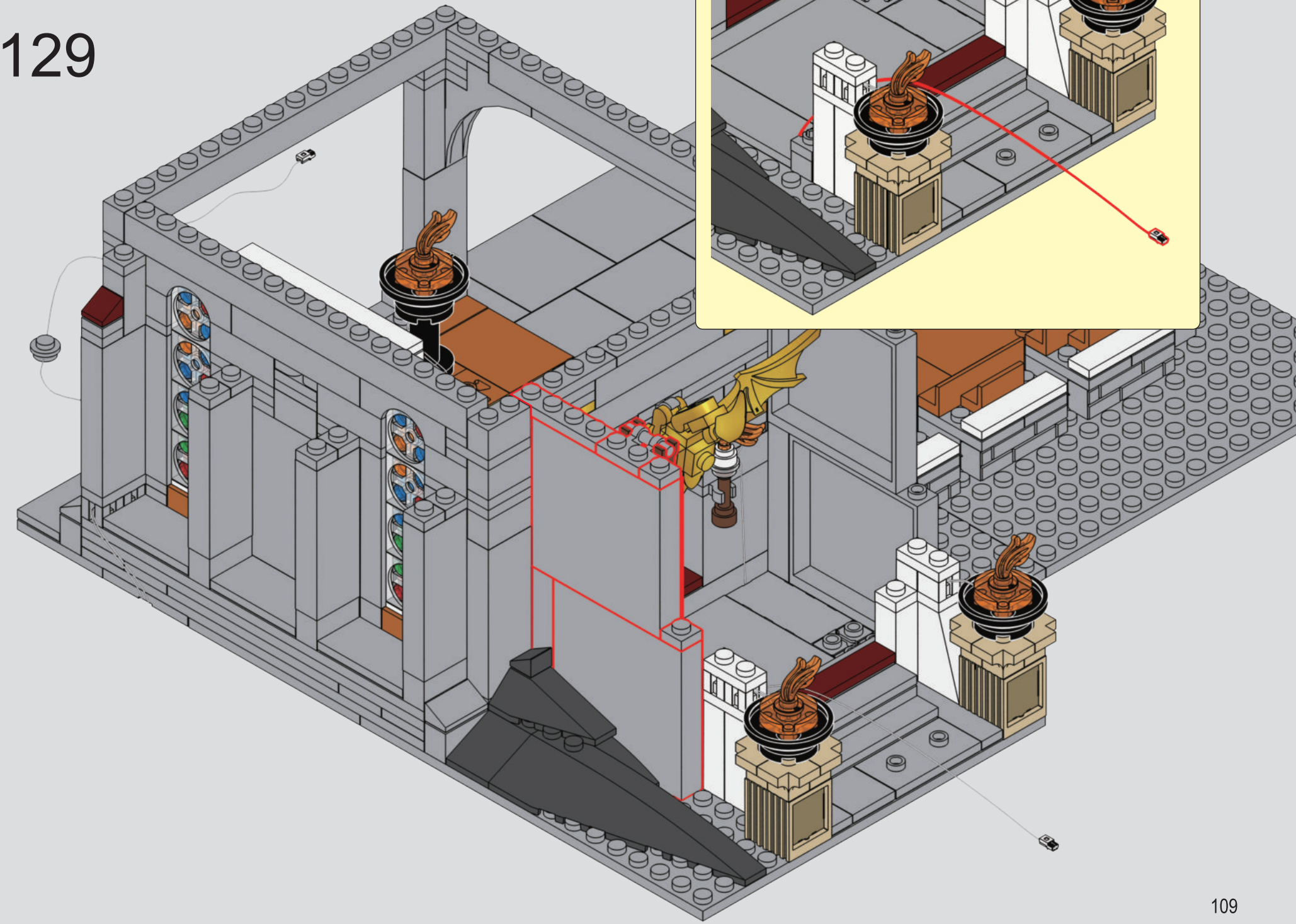

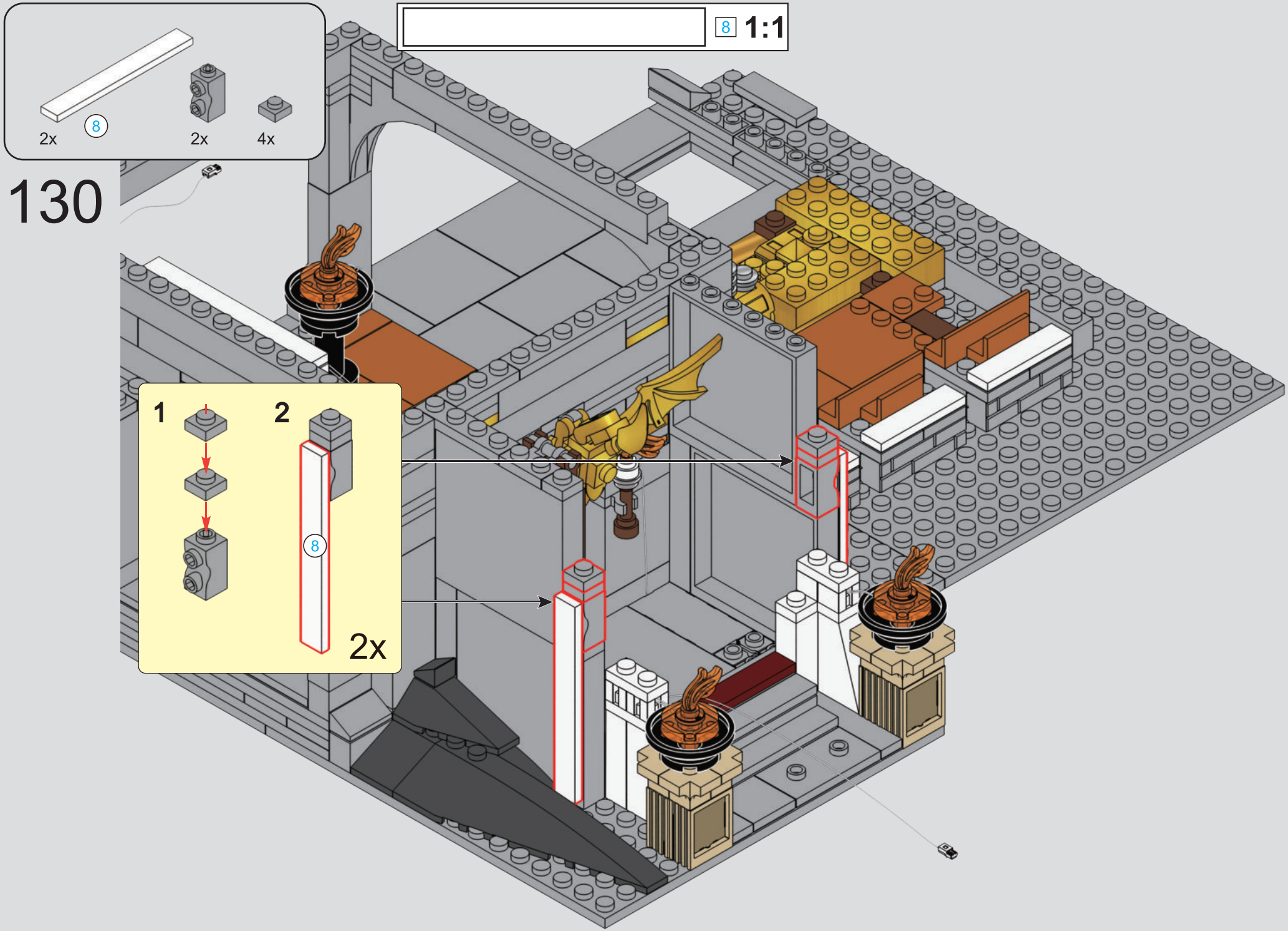
8 1:1
2x
8
2x
4x
130
1
2
8
2x

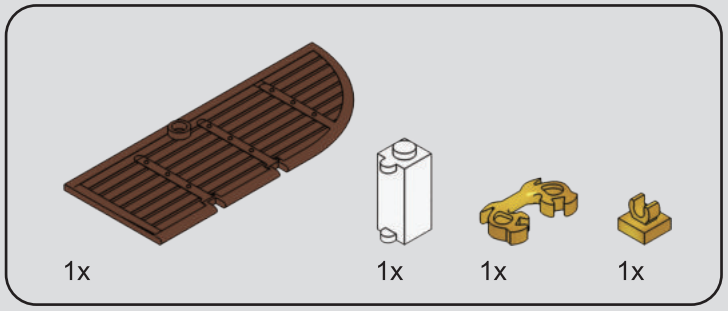

131

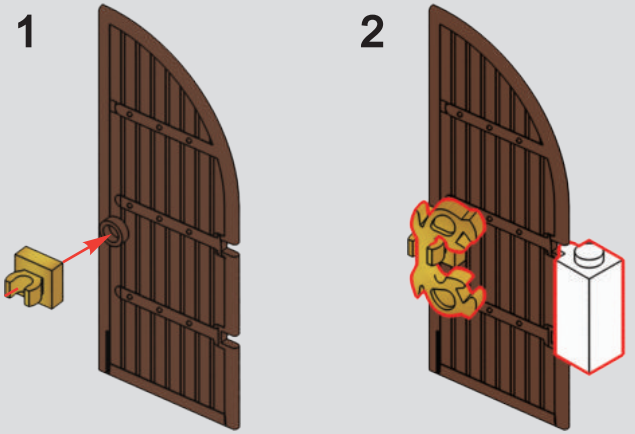

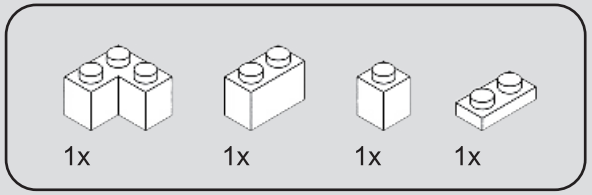

132

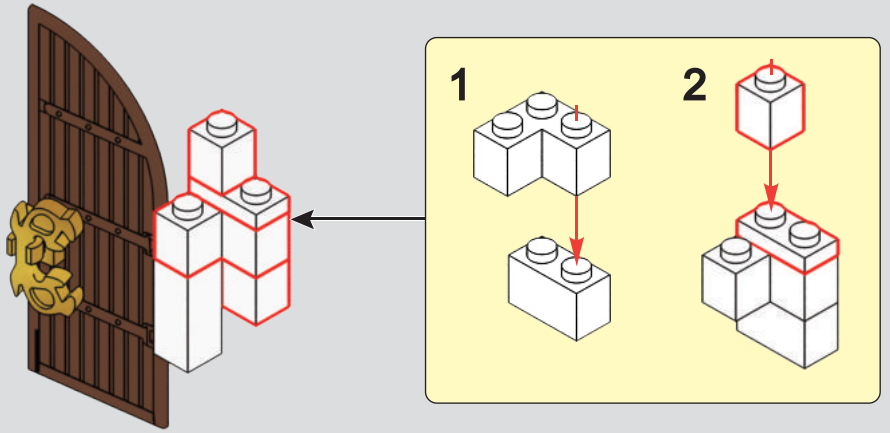

133

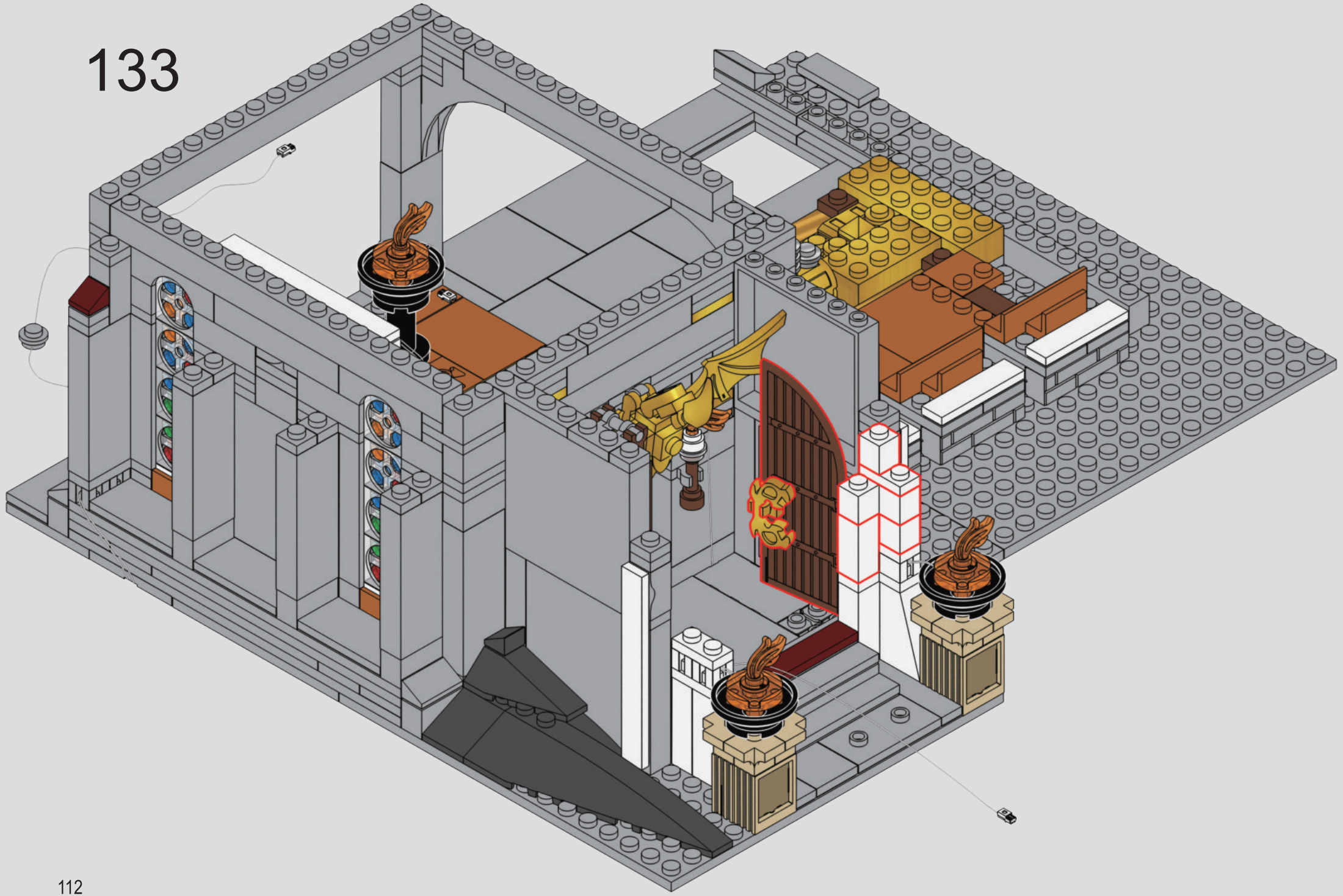

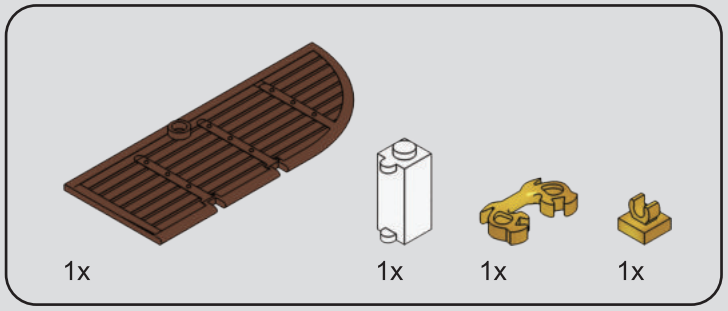

134

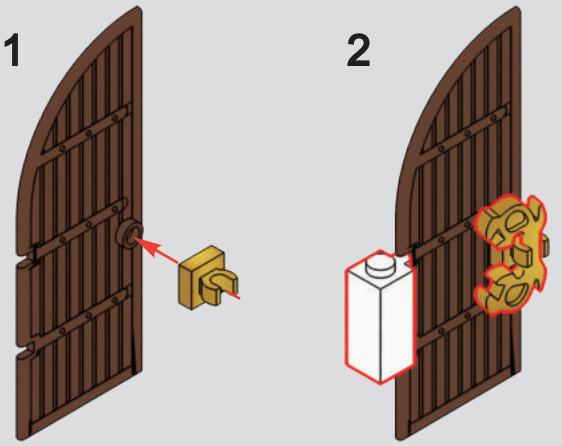

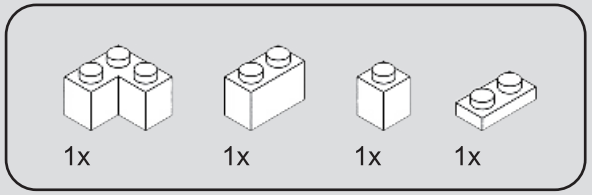

135

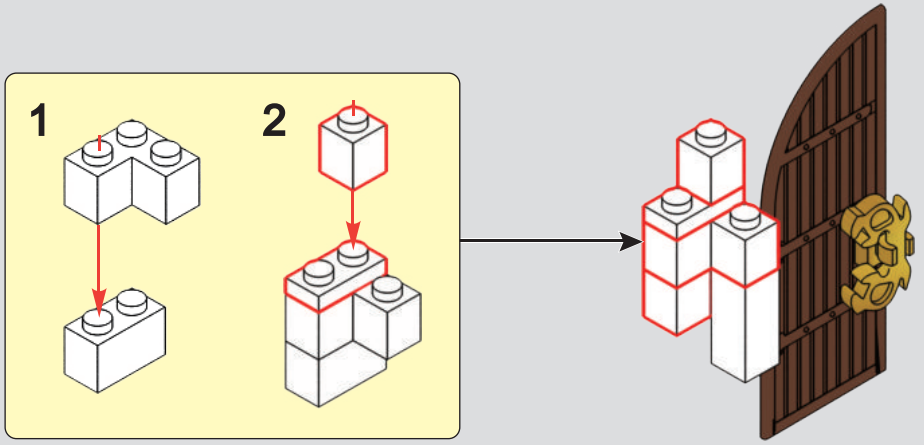

136

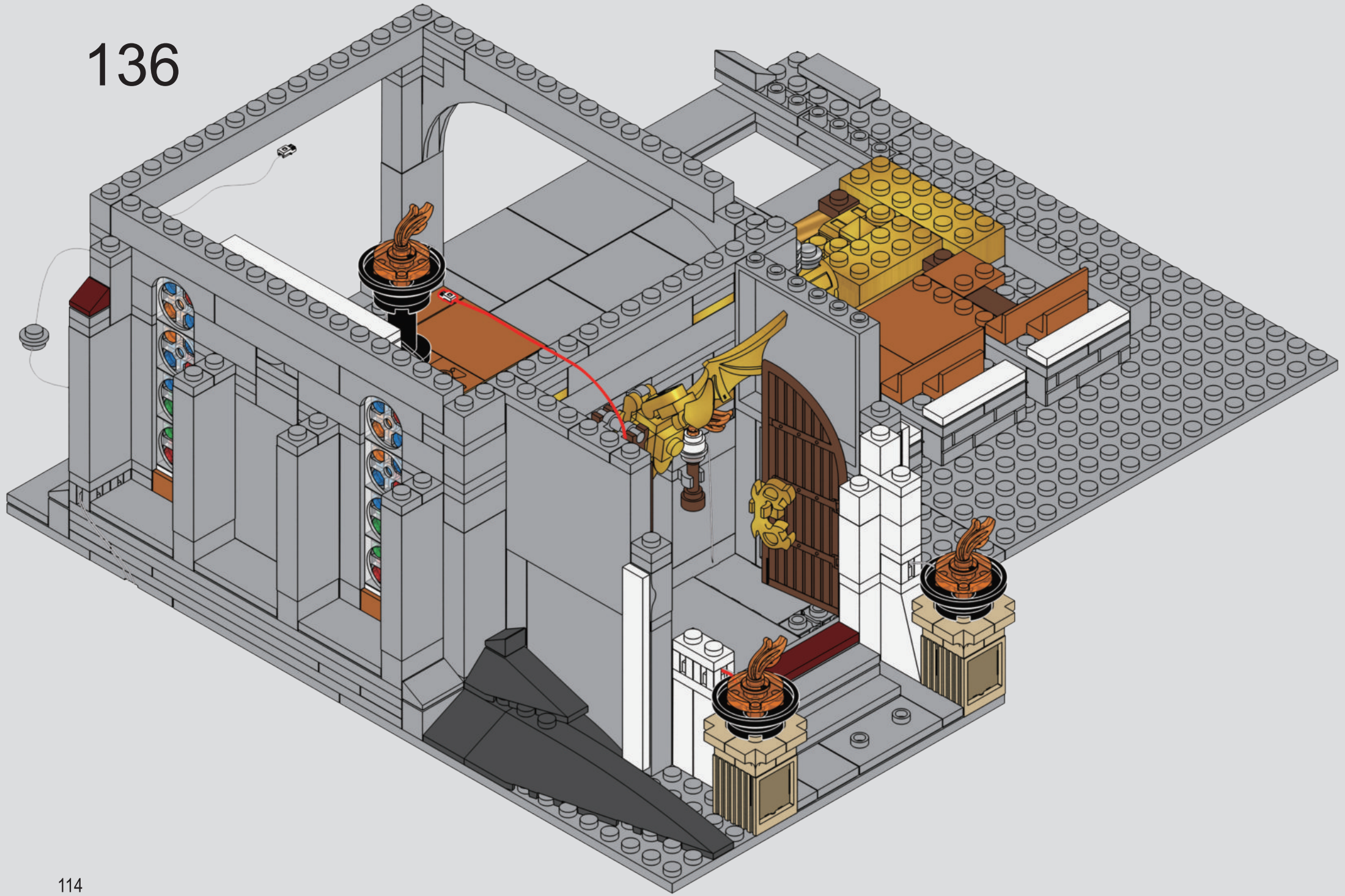

137

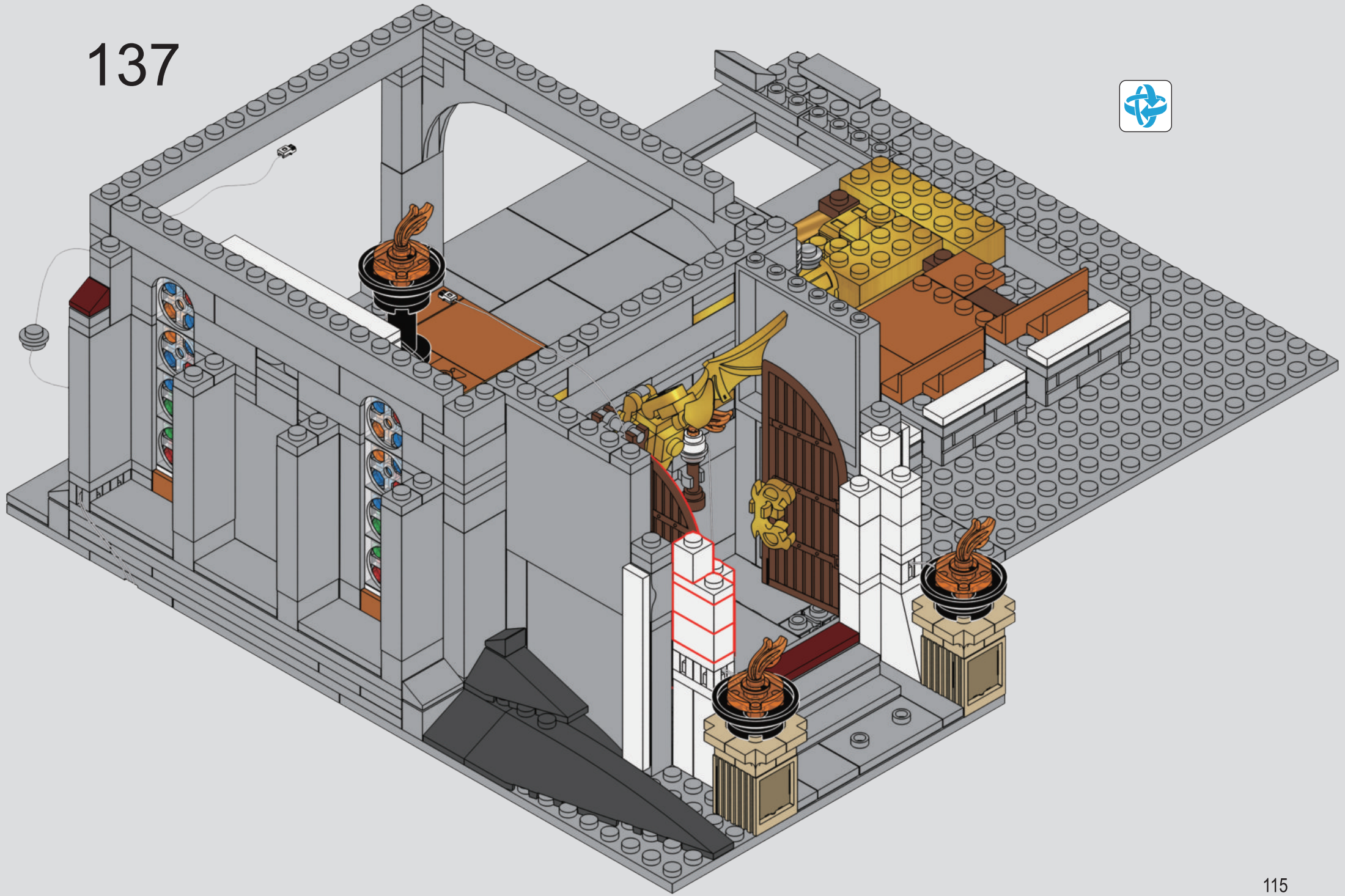

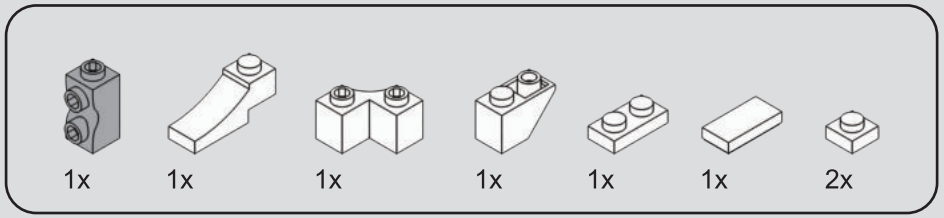

138

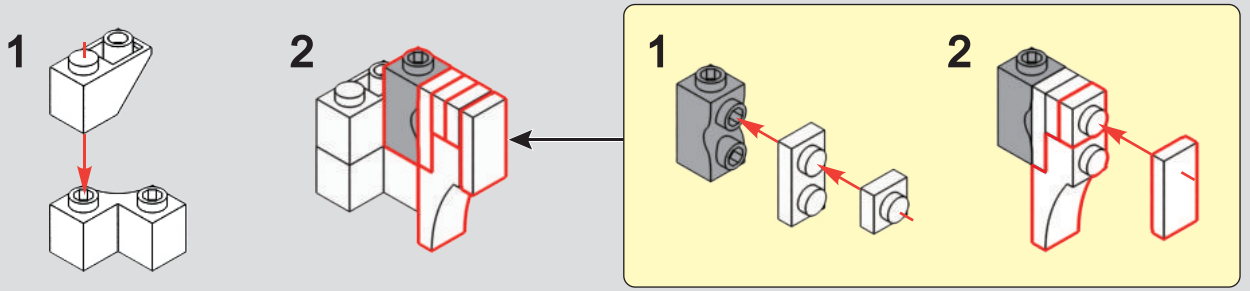

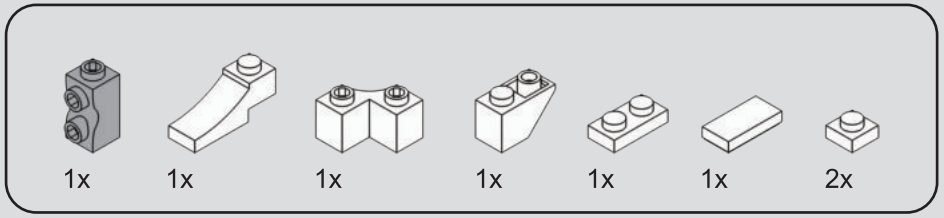

139

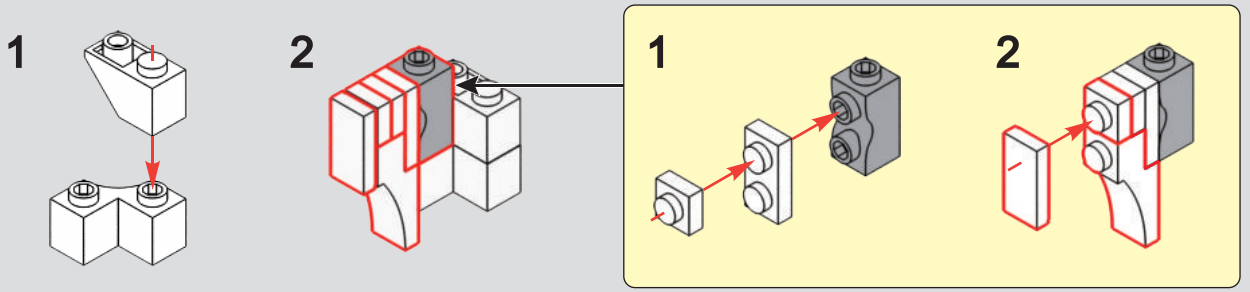

140

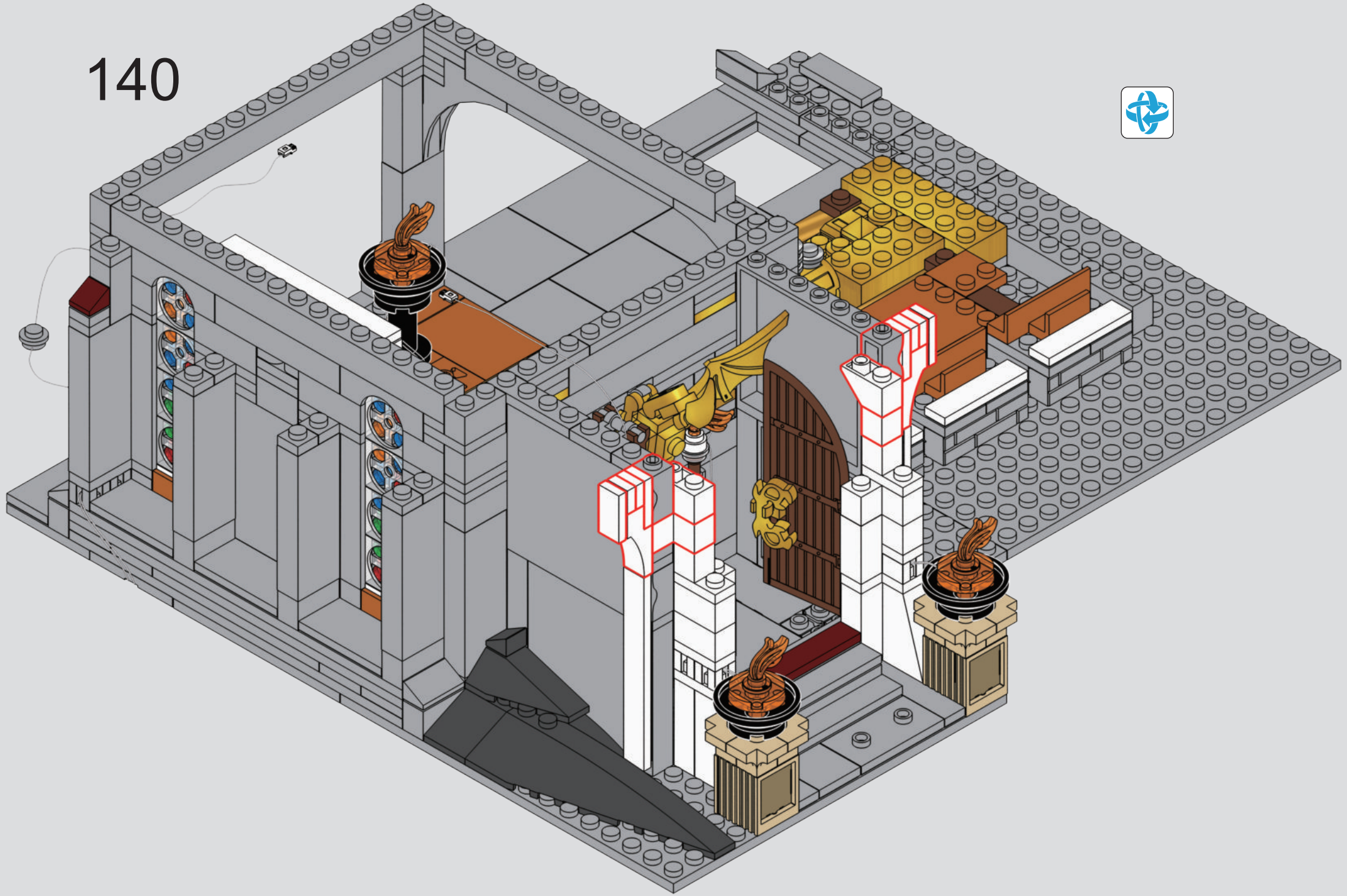

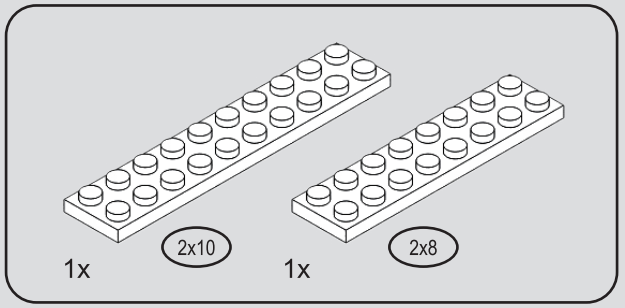

141

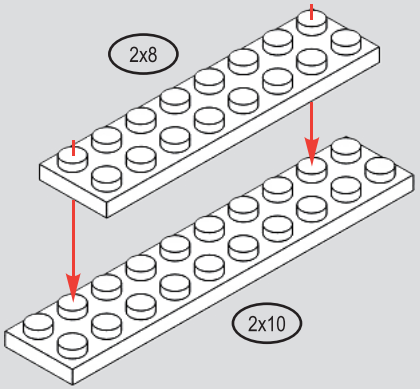

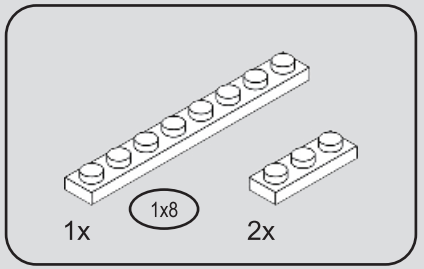

142

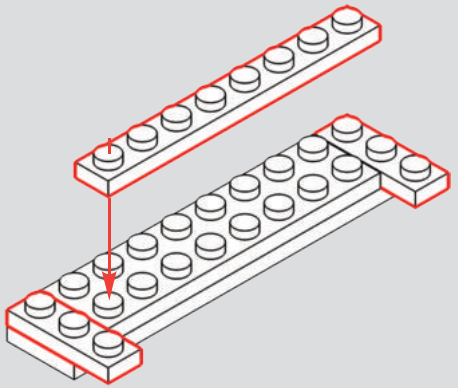

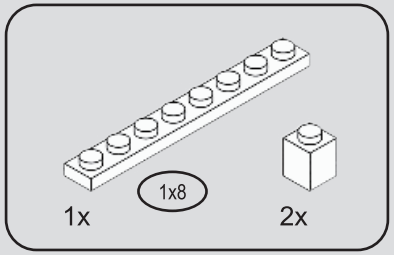

143

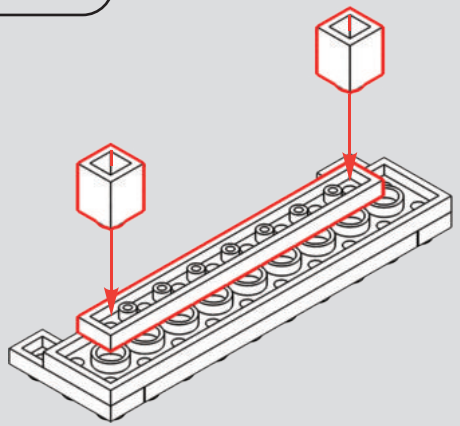

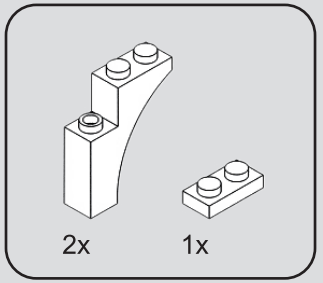

144

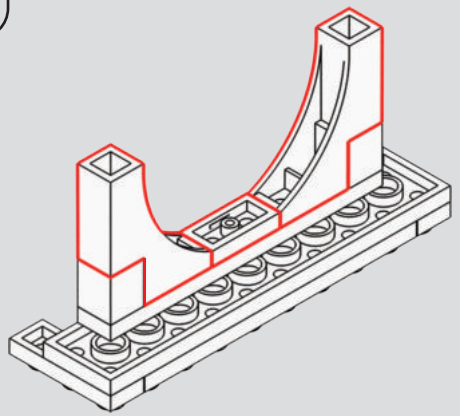

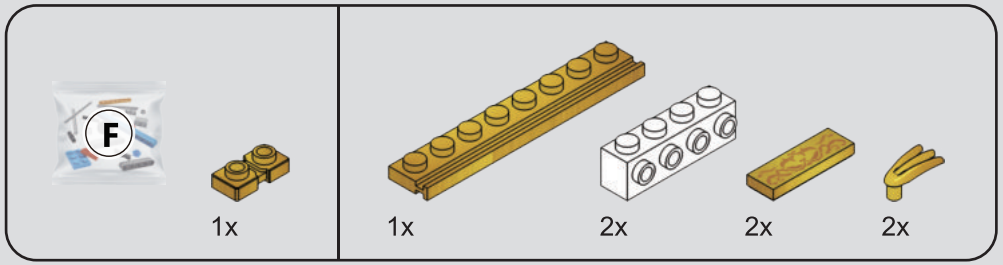

145

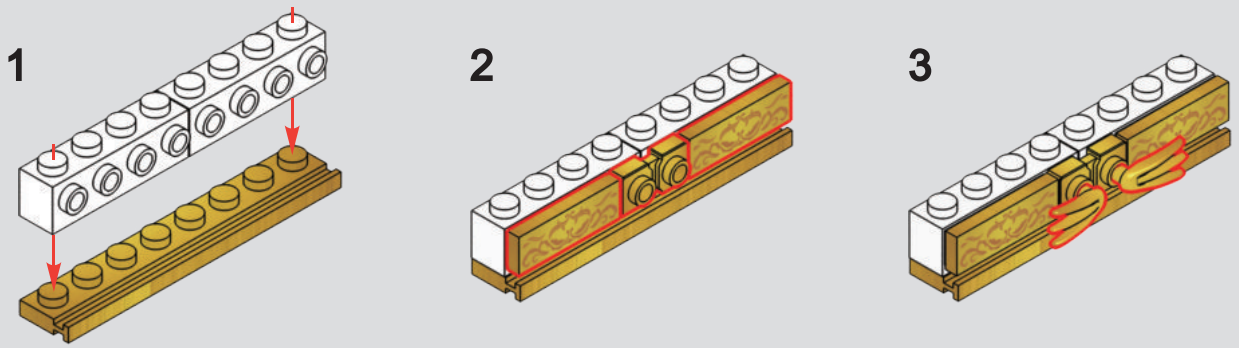

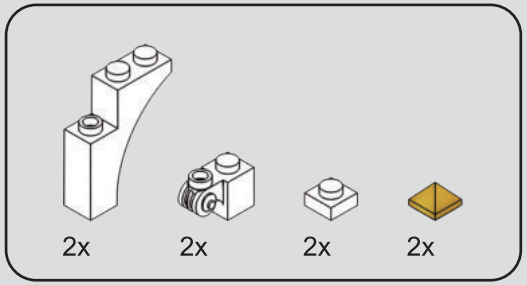

146

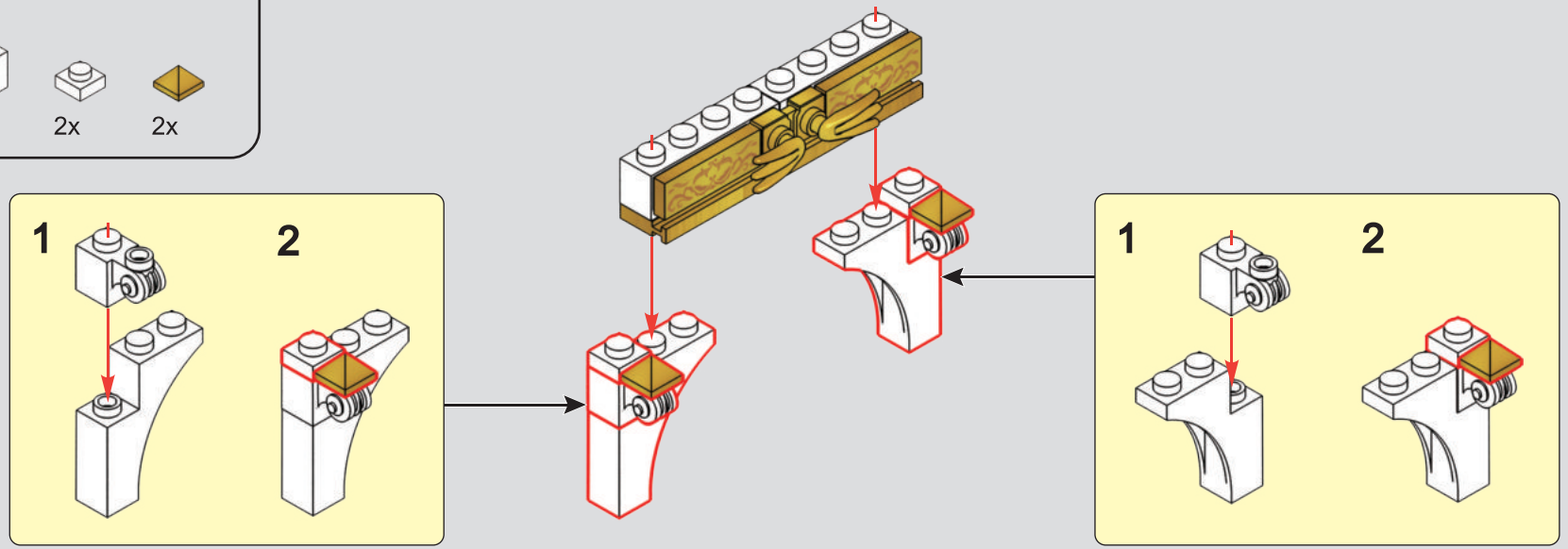

147

1

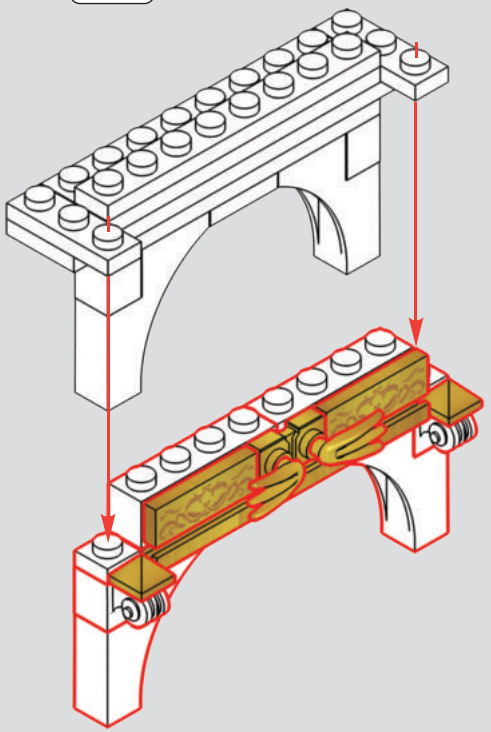

2

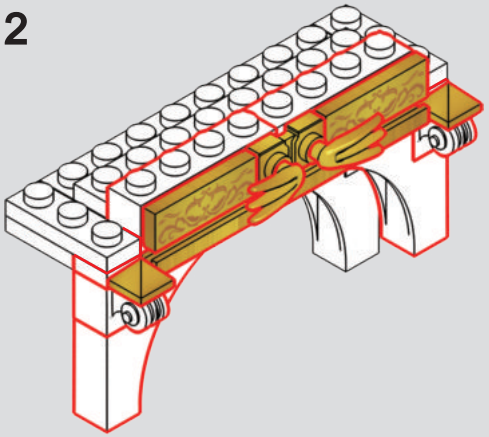

148

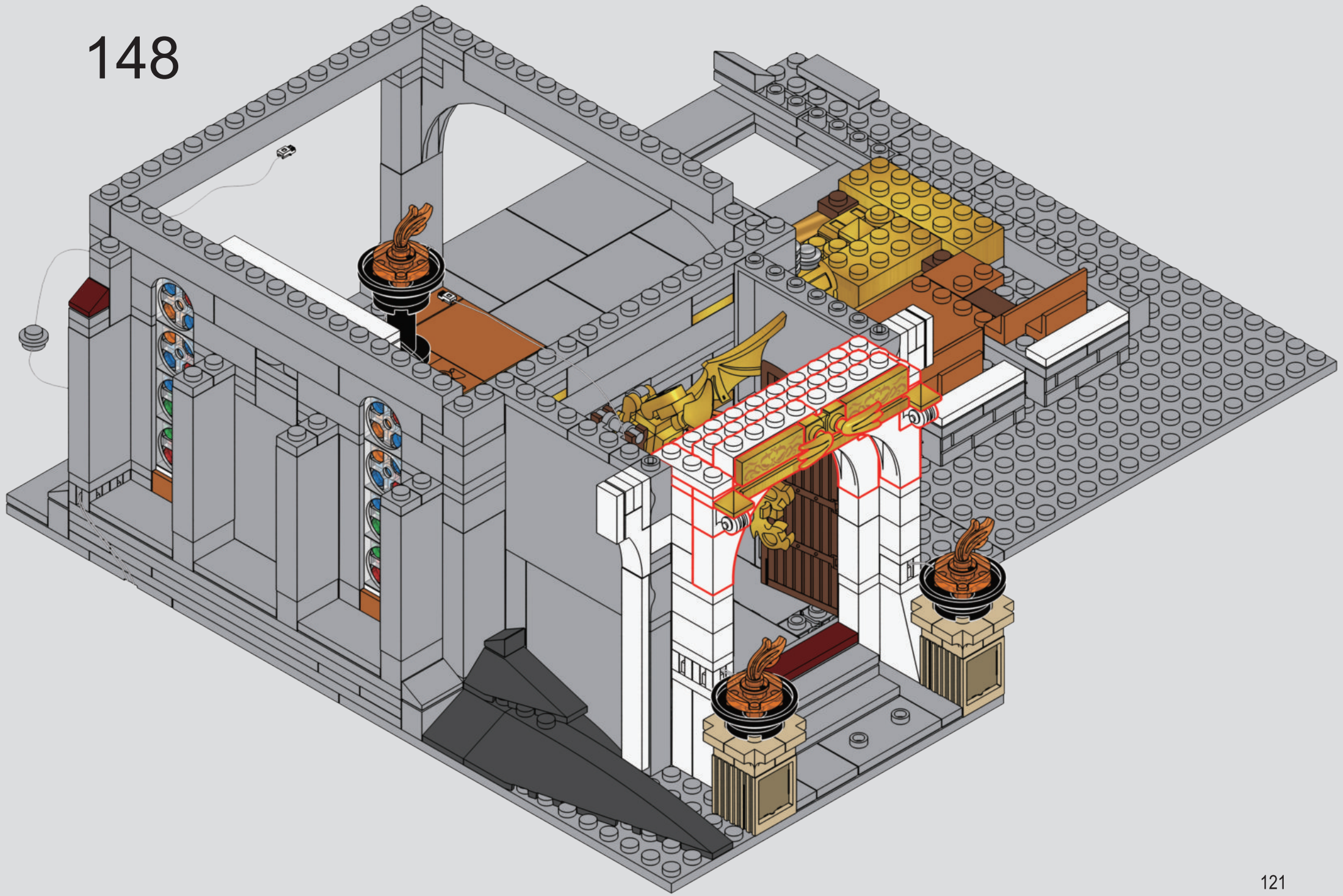

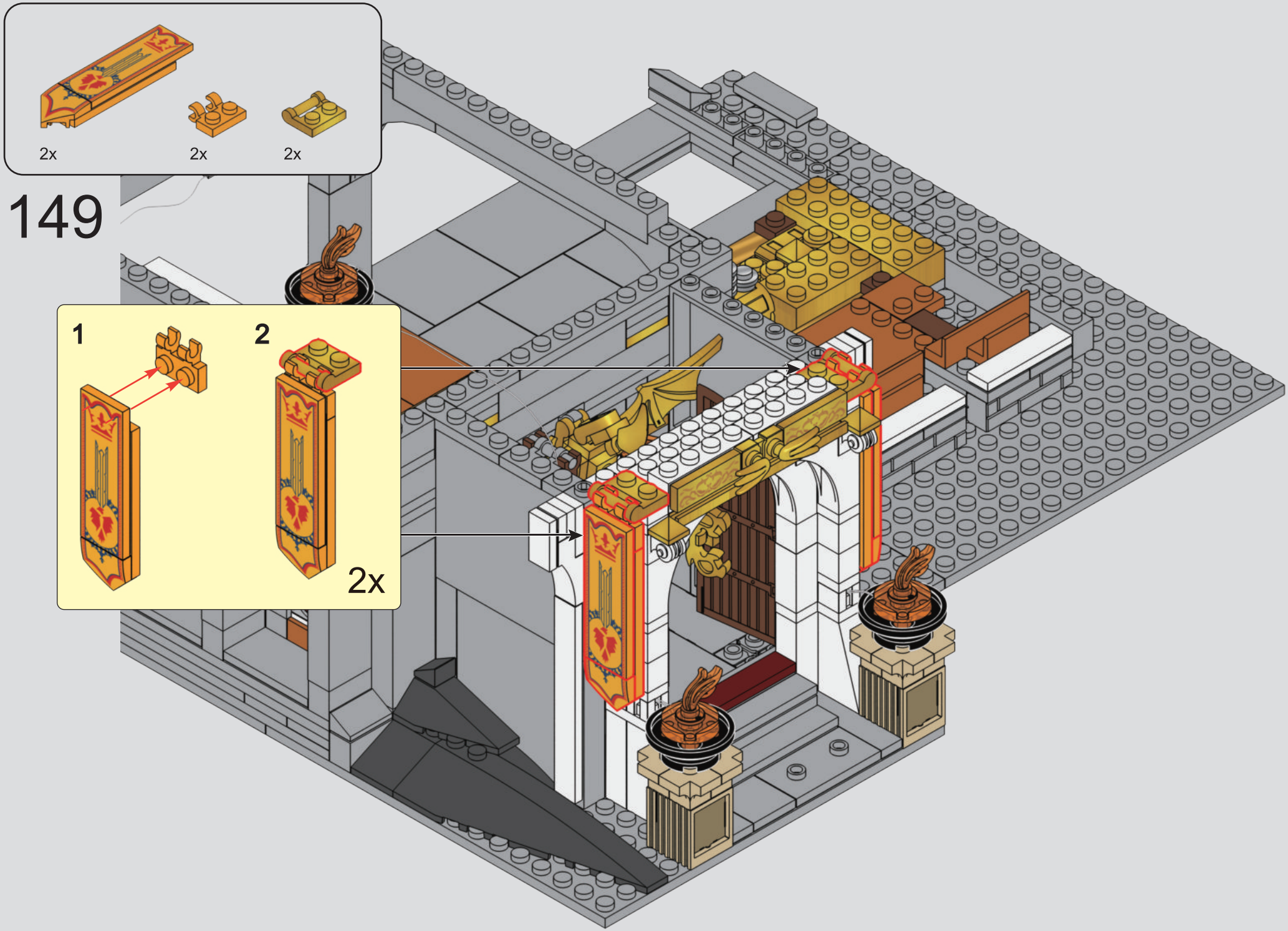
2x
2x
2x
149
1
2
2x

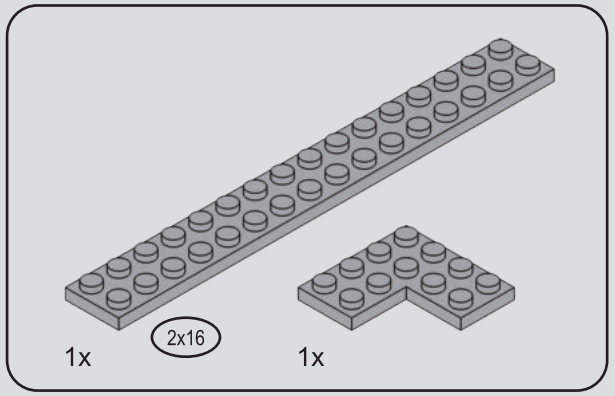

150

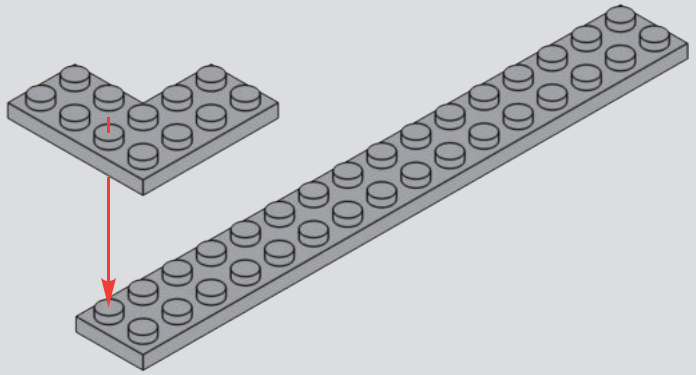

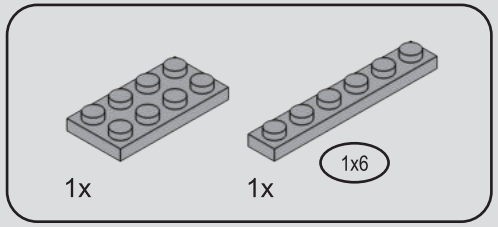

151

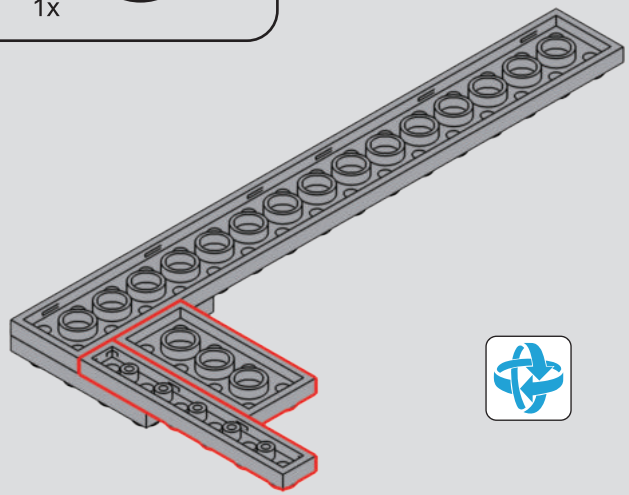

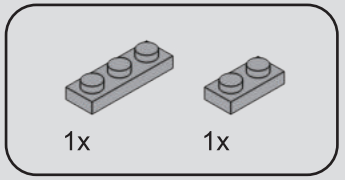

152

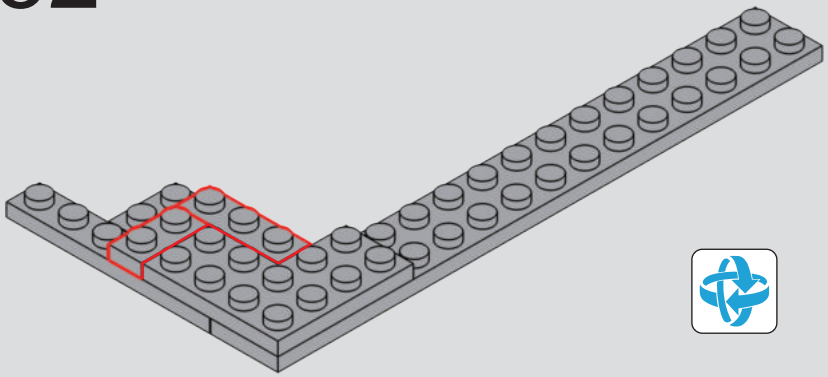

153

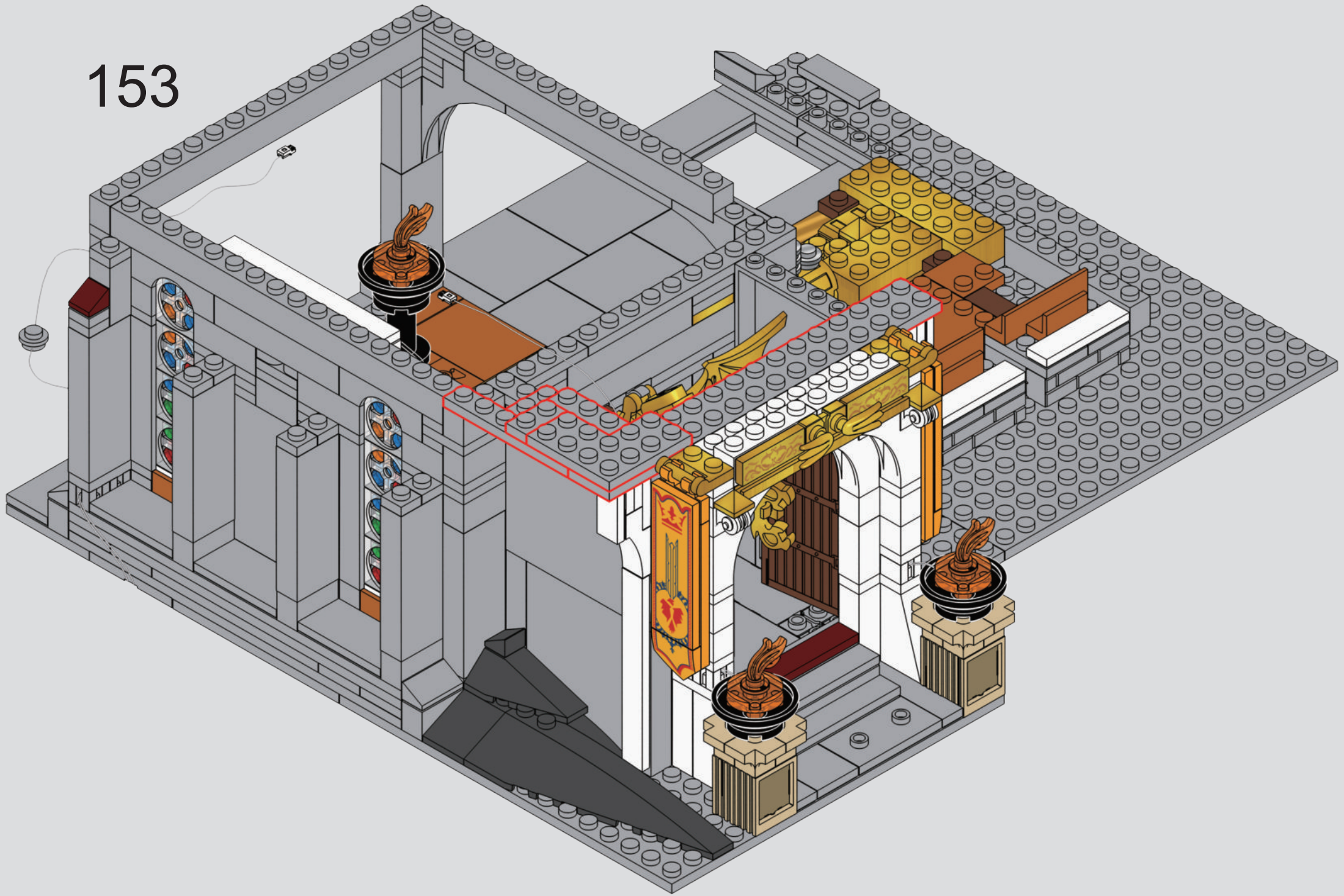

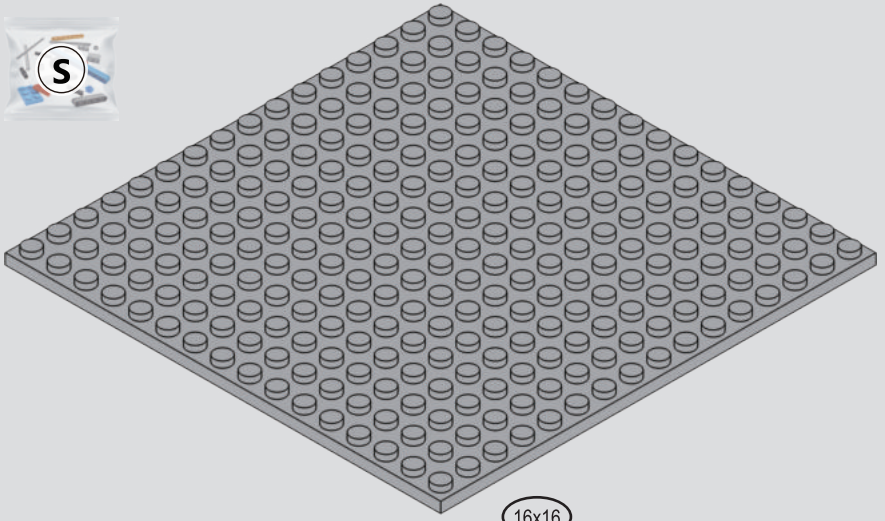

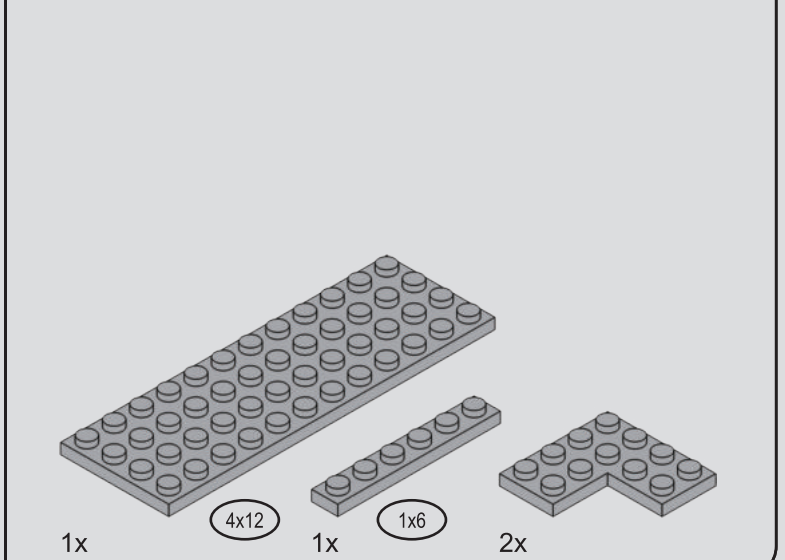

154

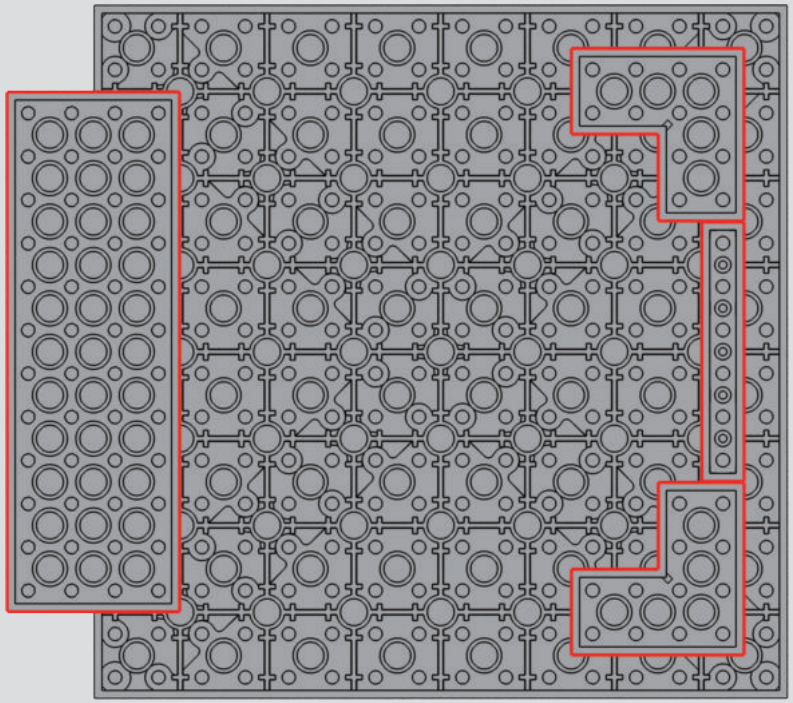

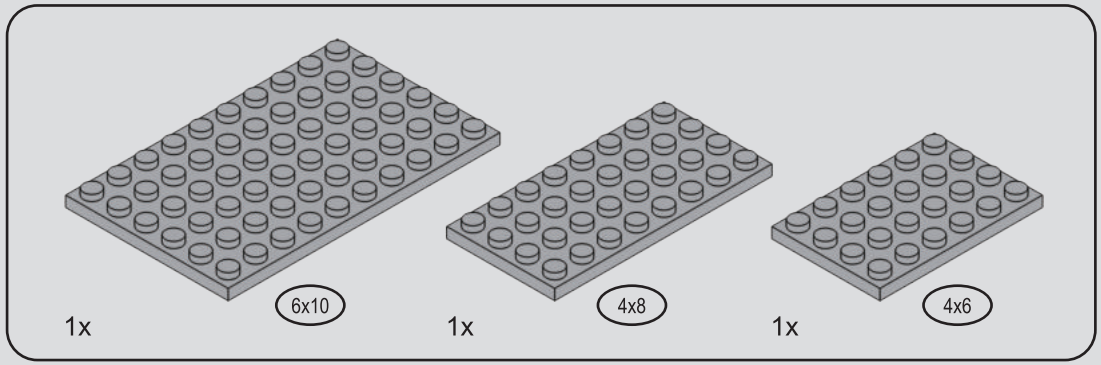

155

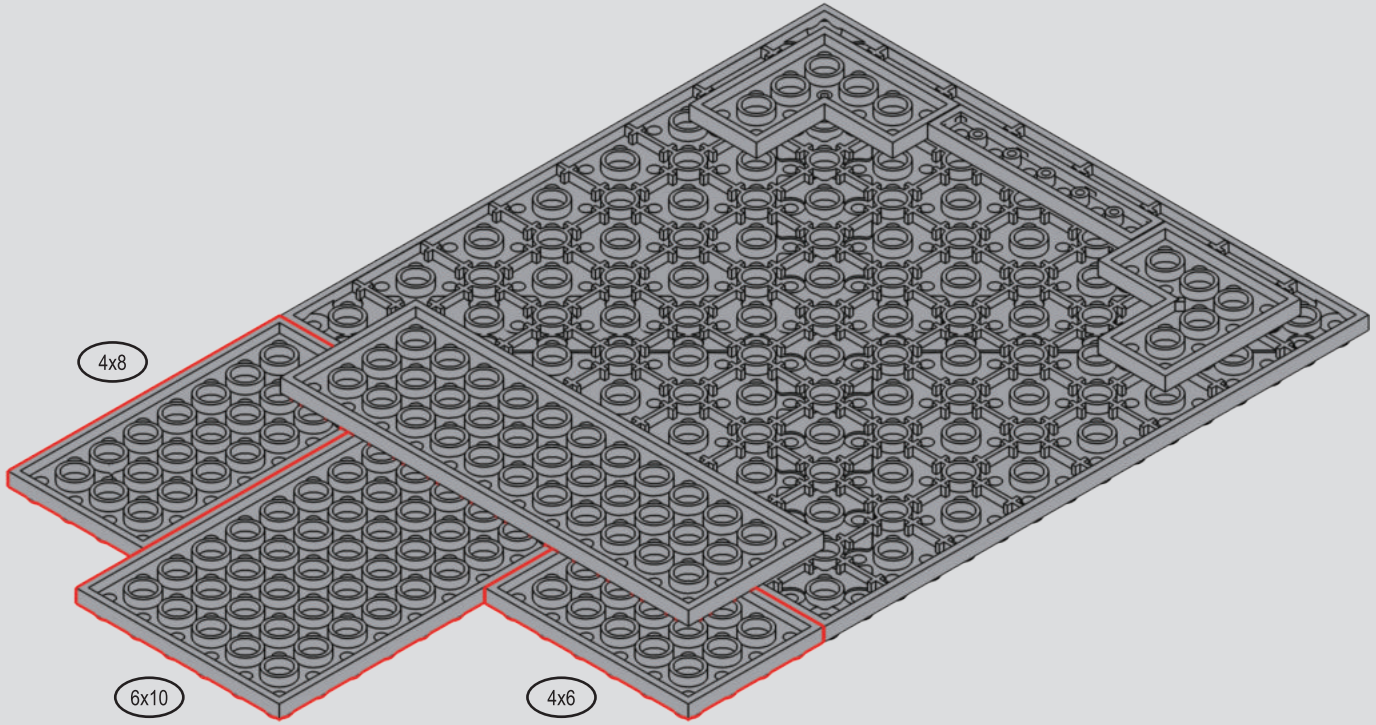

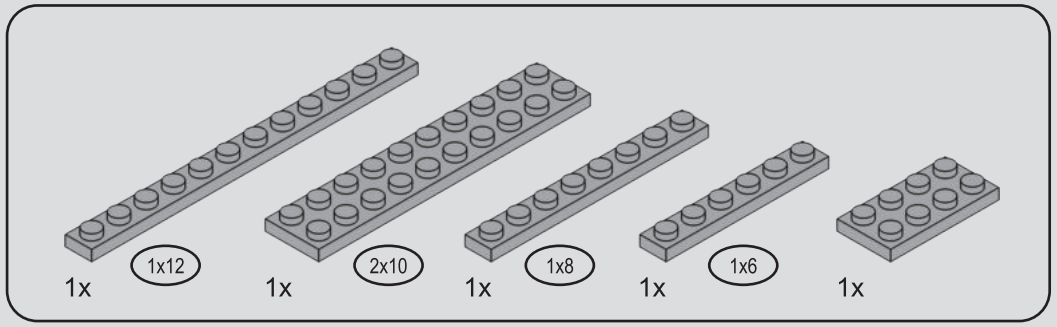

156

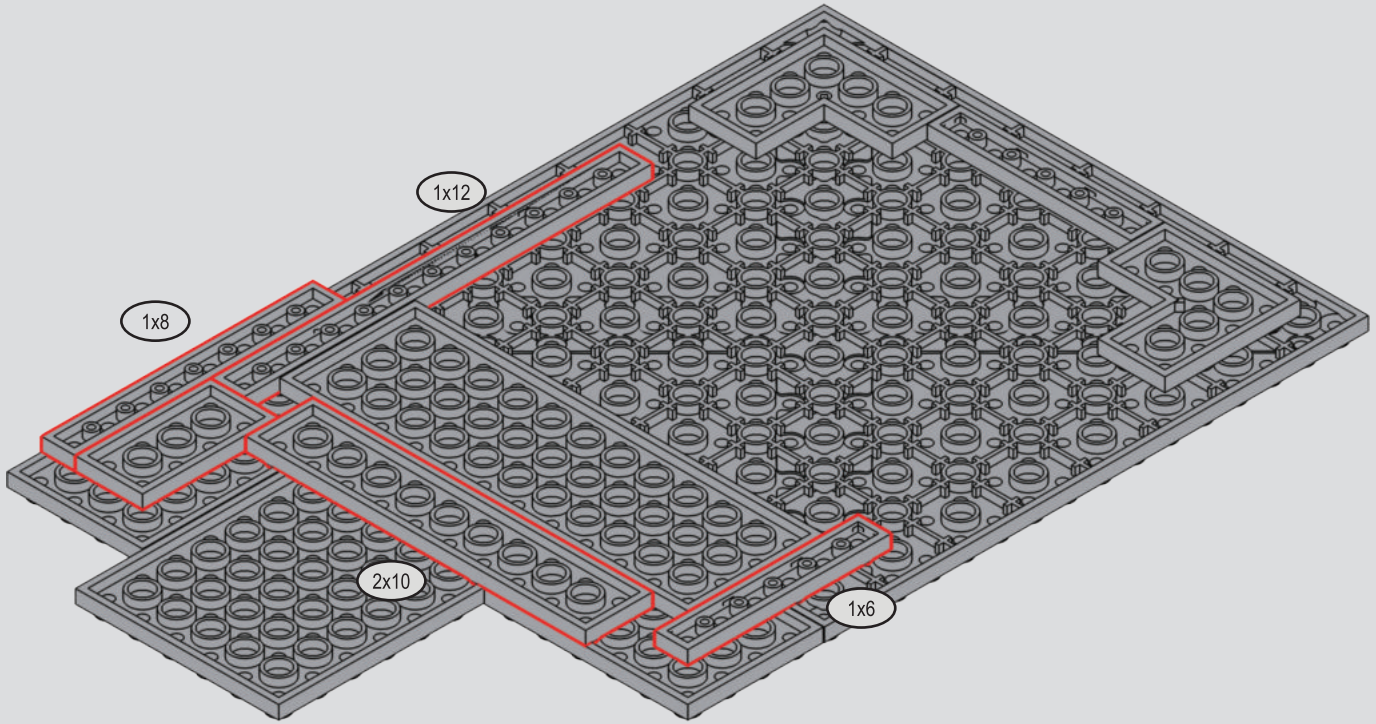

157

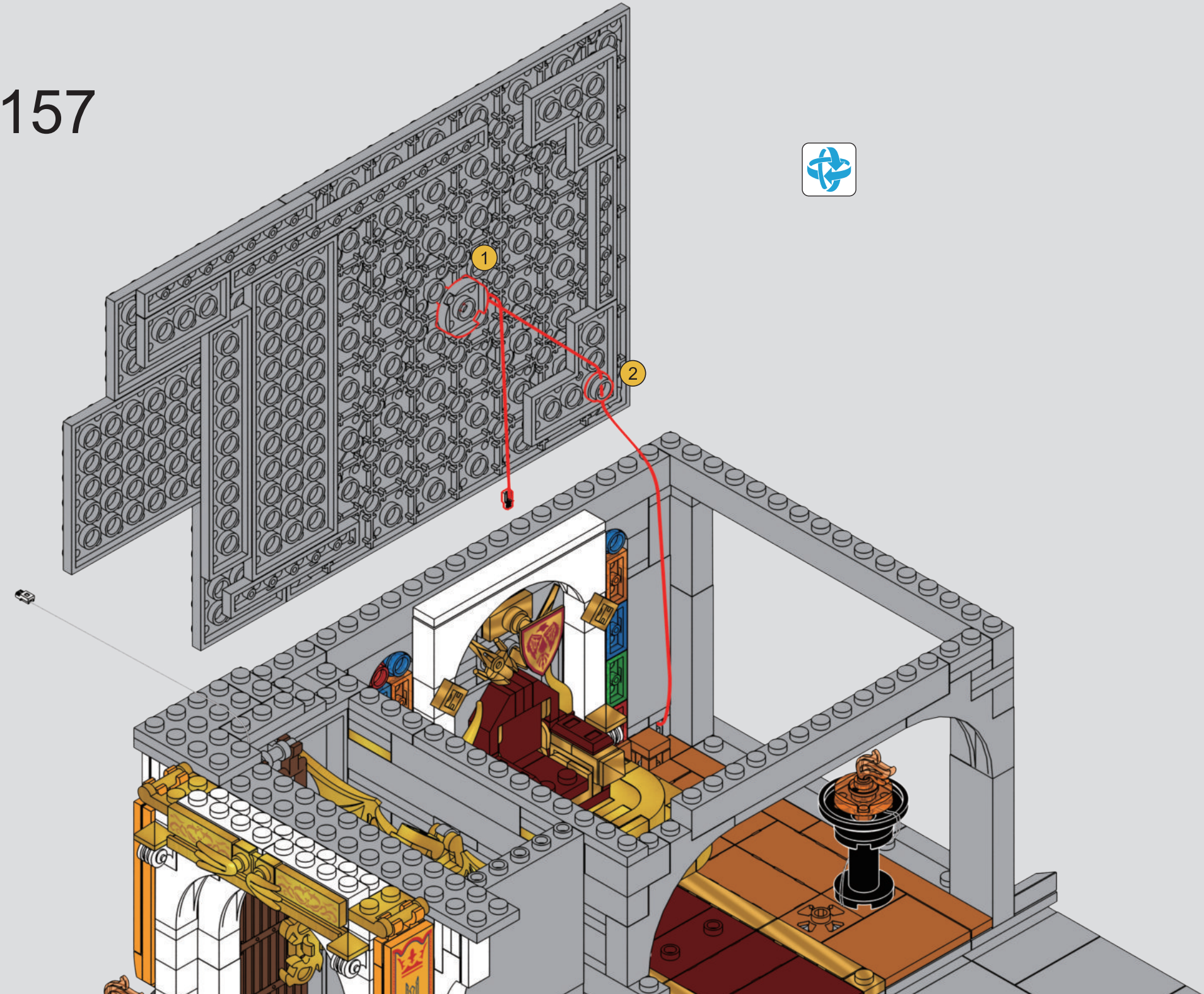

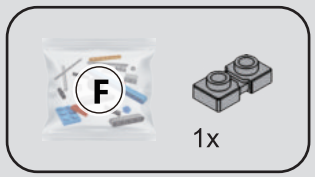

158

1

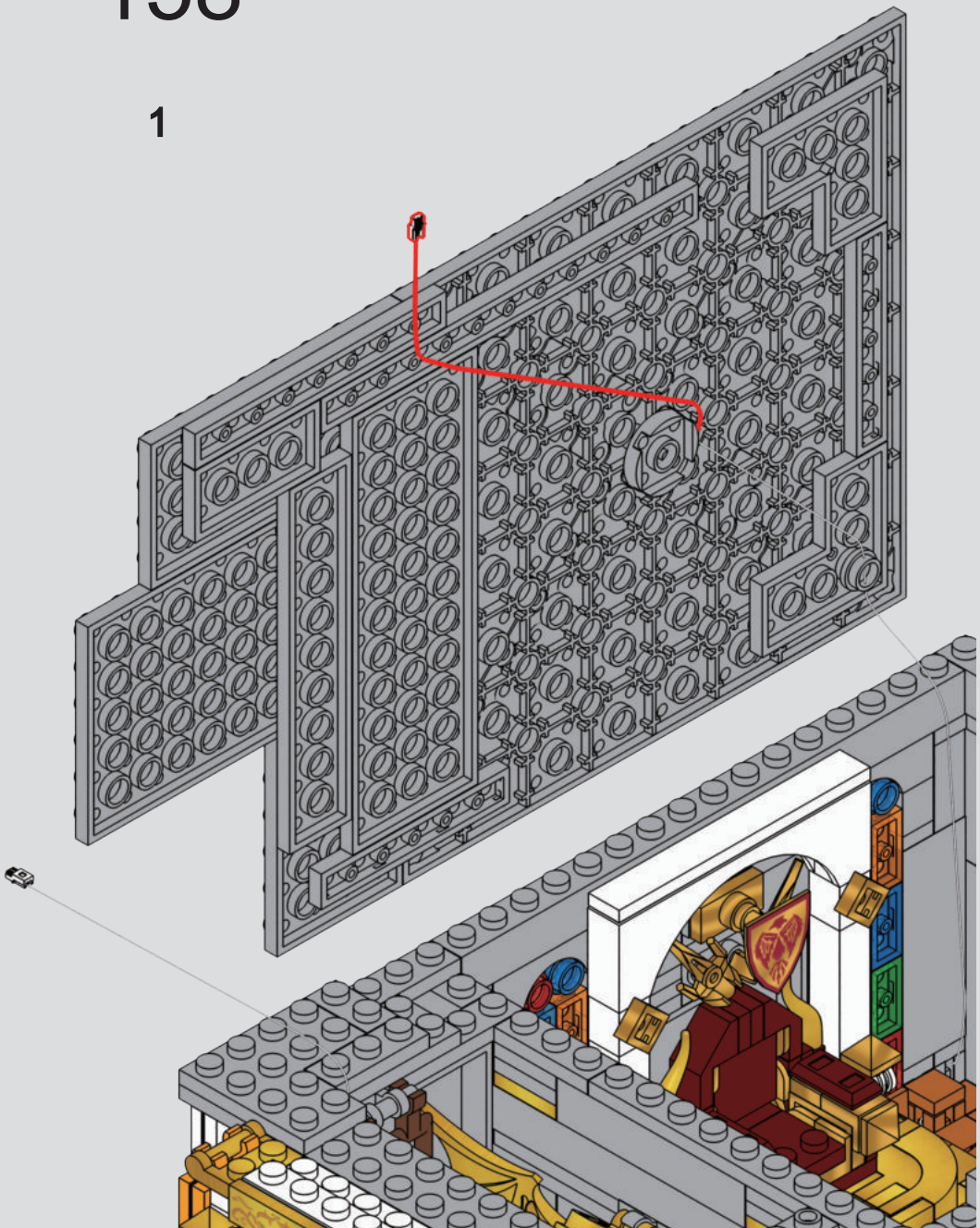

2

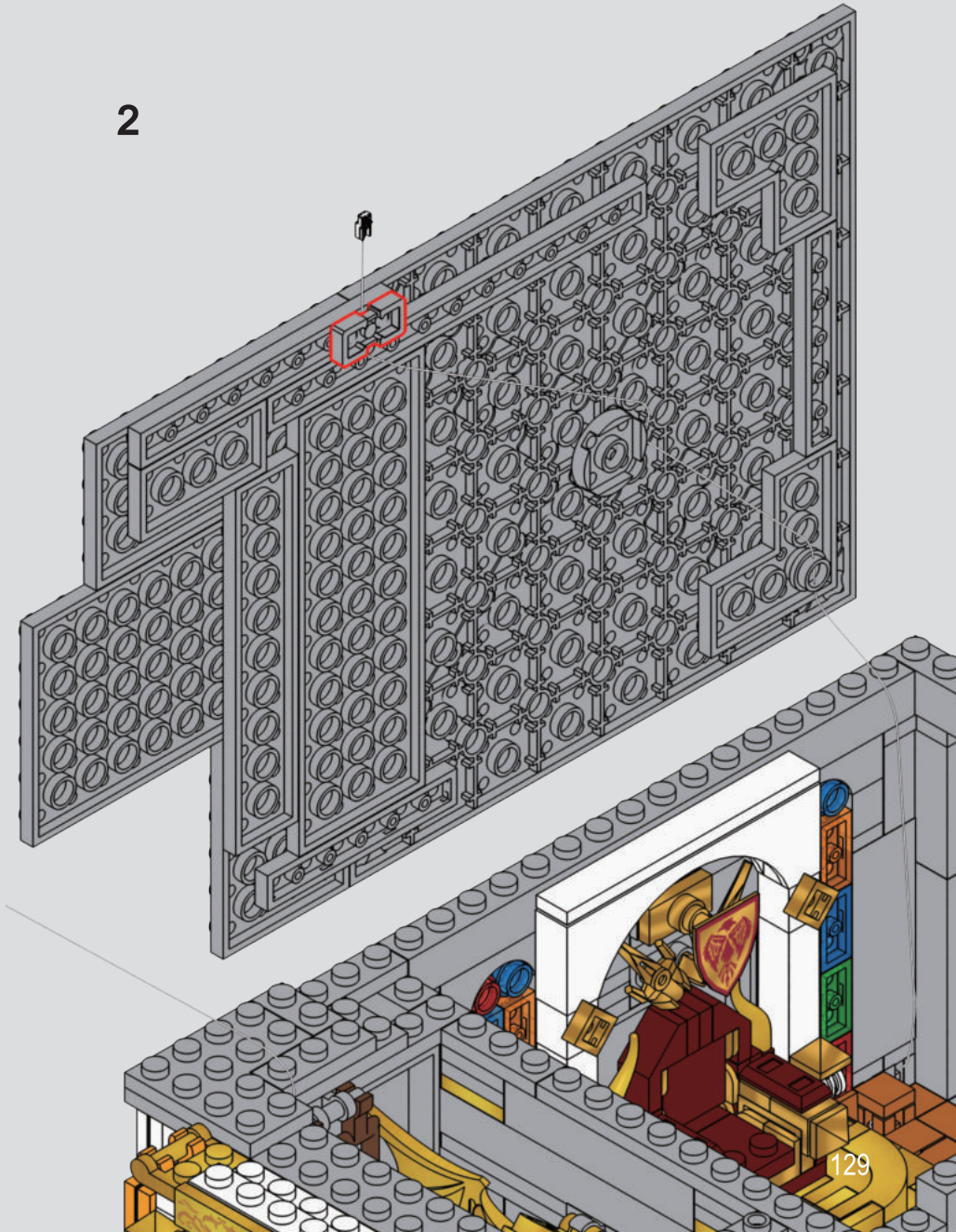

159

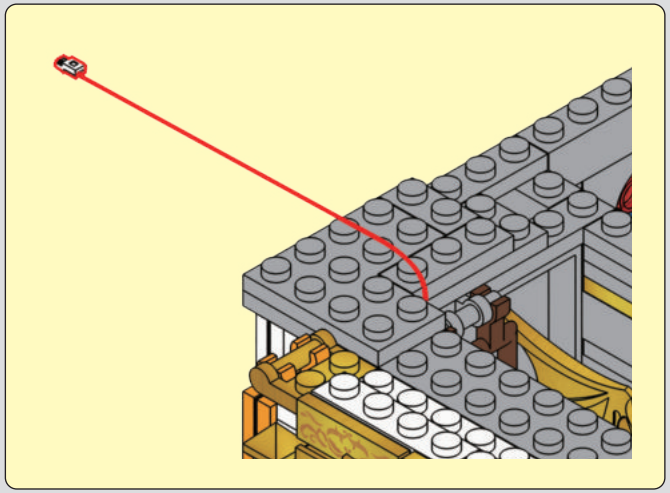

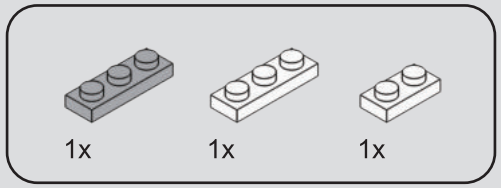

160

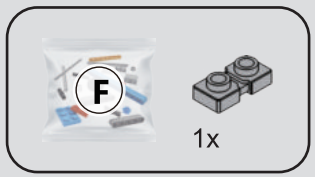

161

1

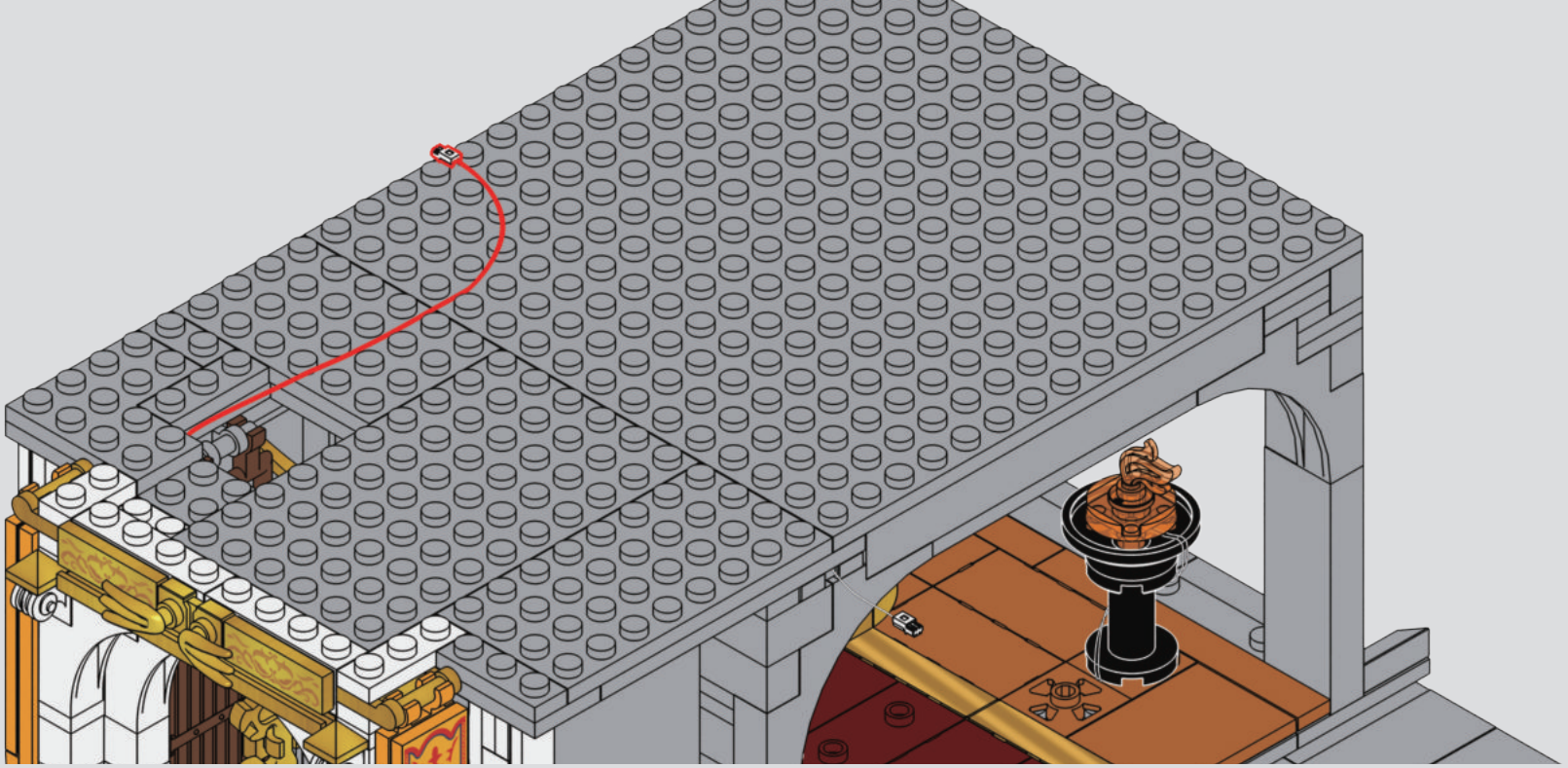

2

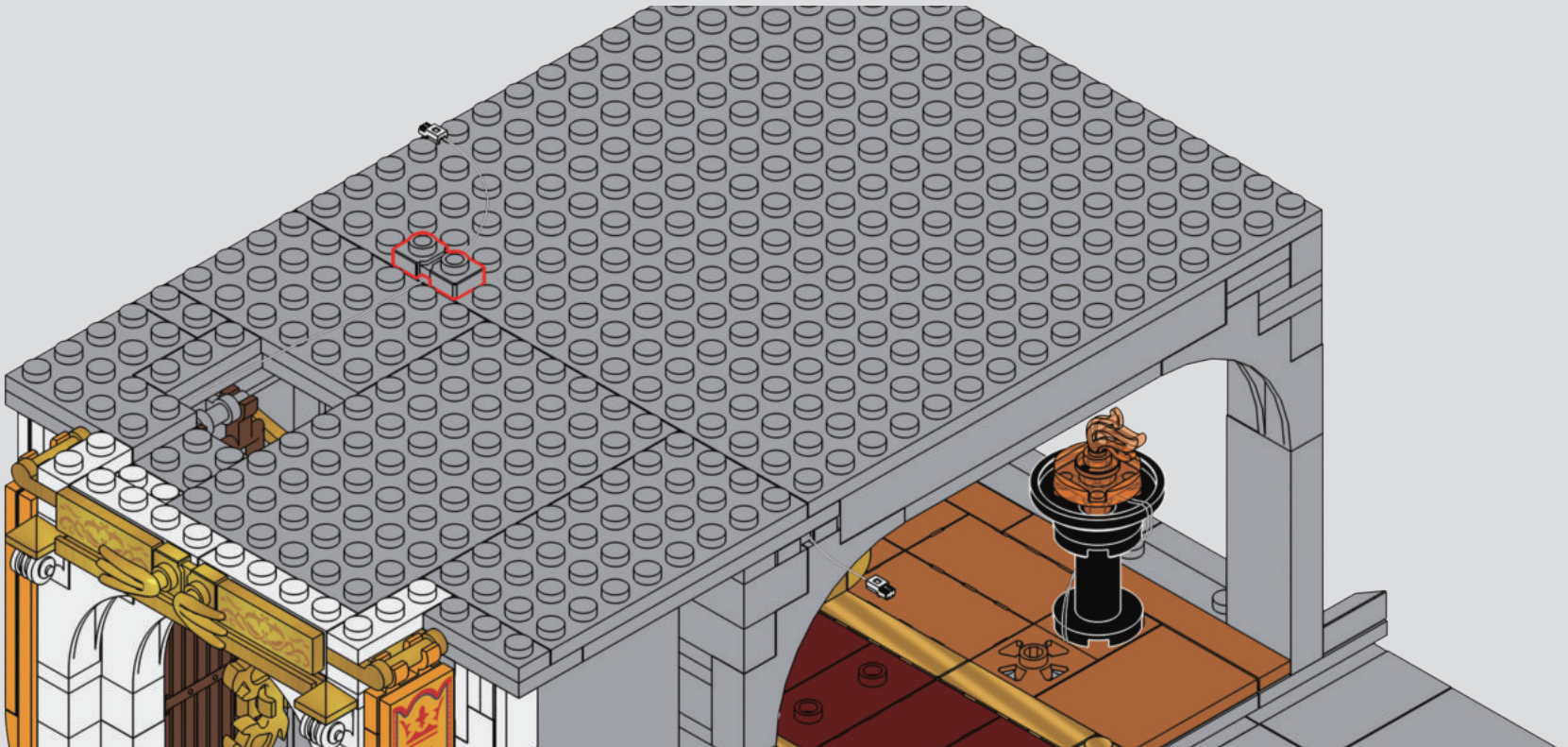

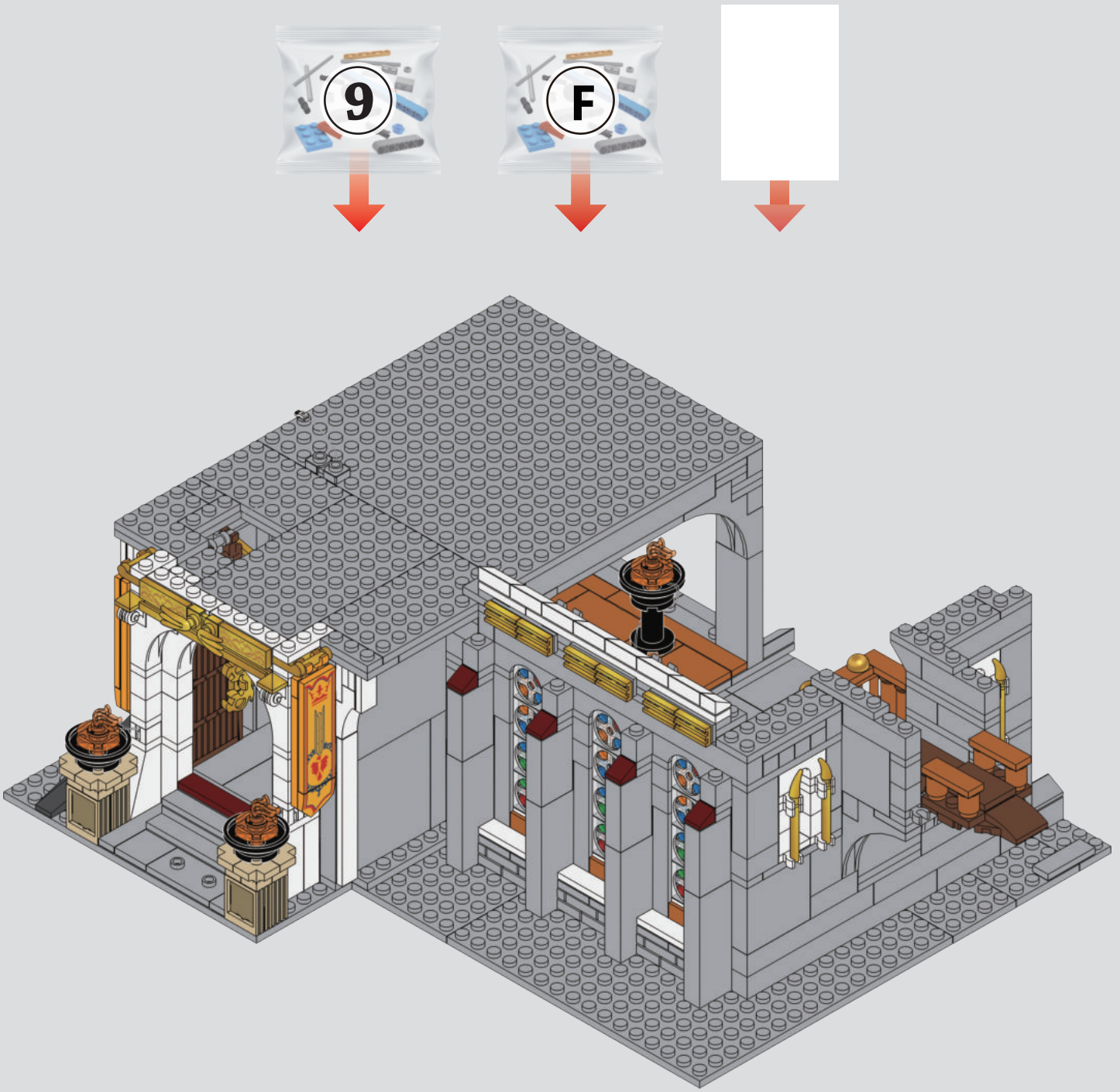
9
F


F
2x
1x
162

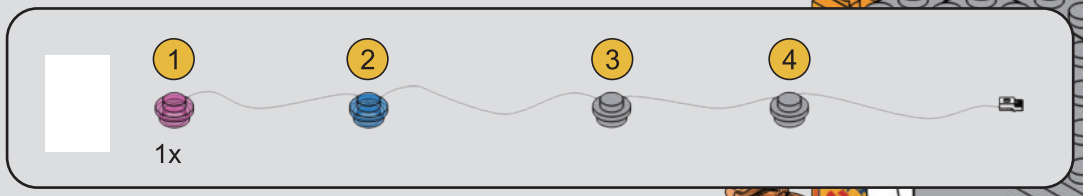

163

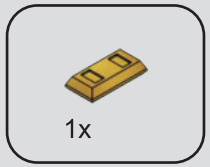

164

1



2

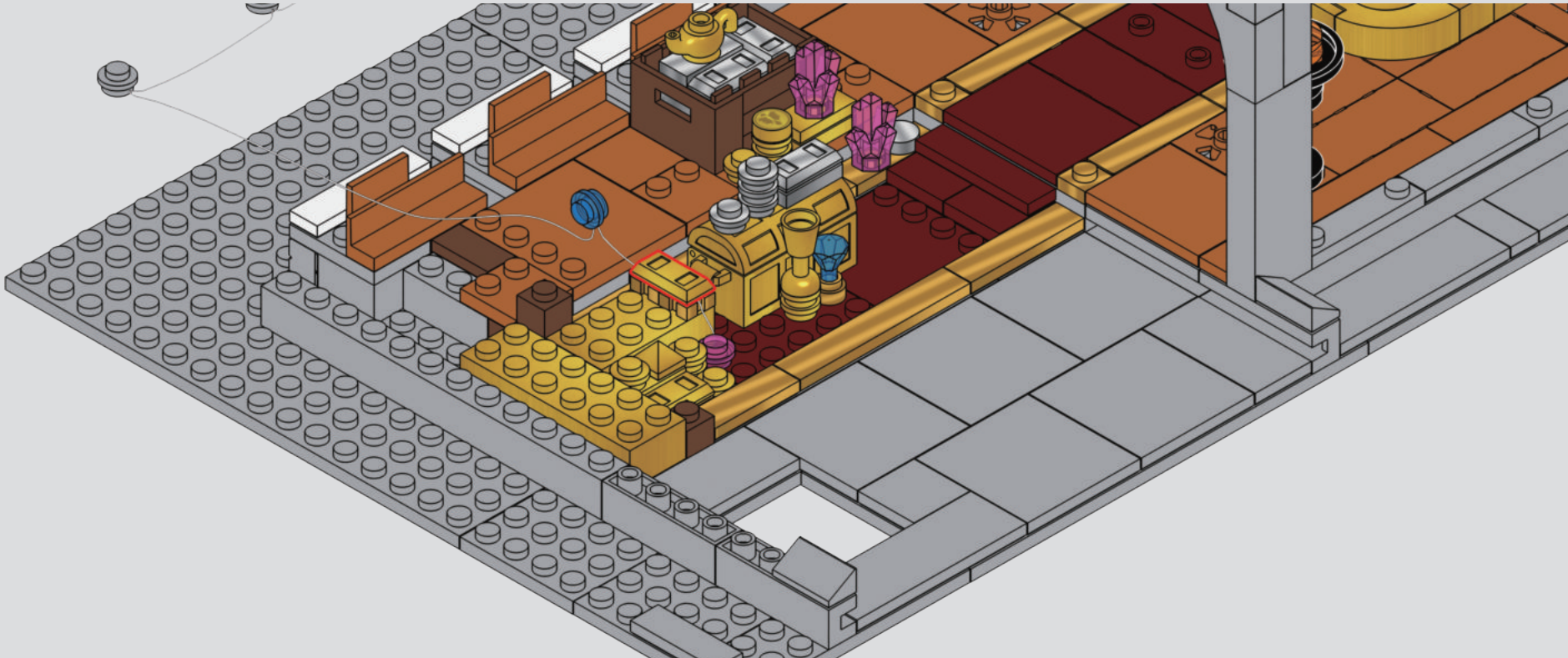

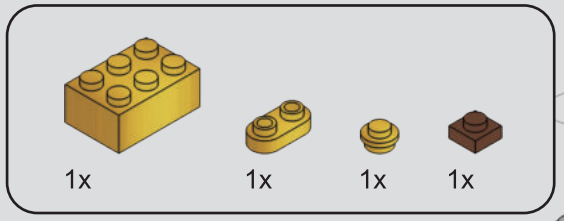

165



166



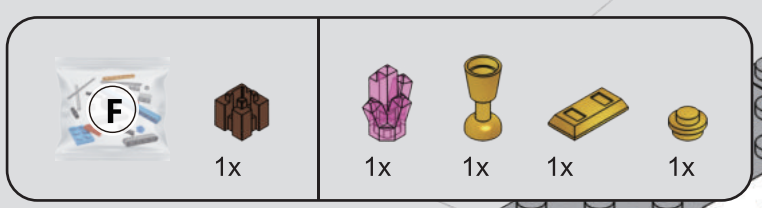

167

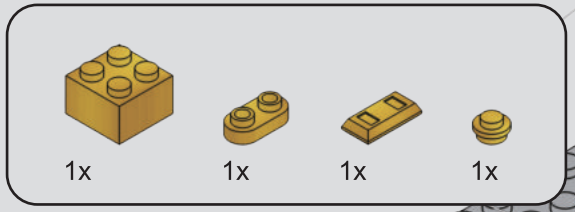

168

1x

169

1

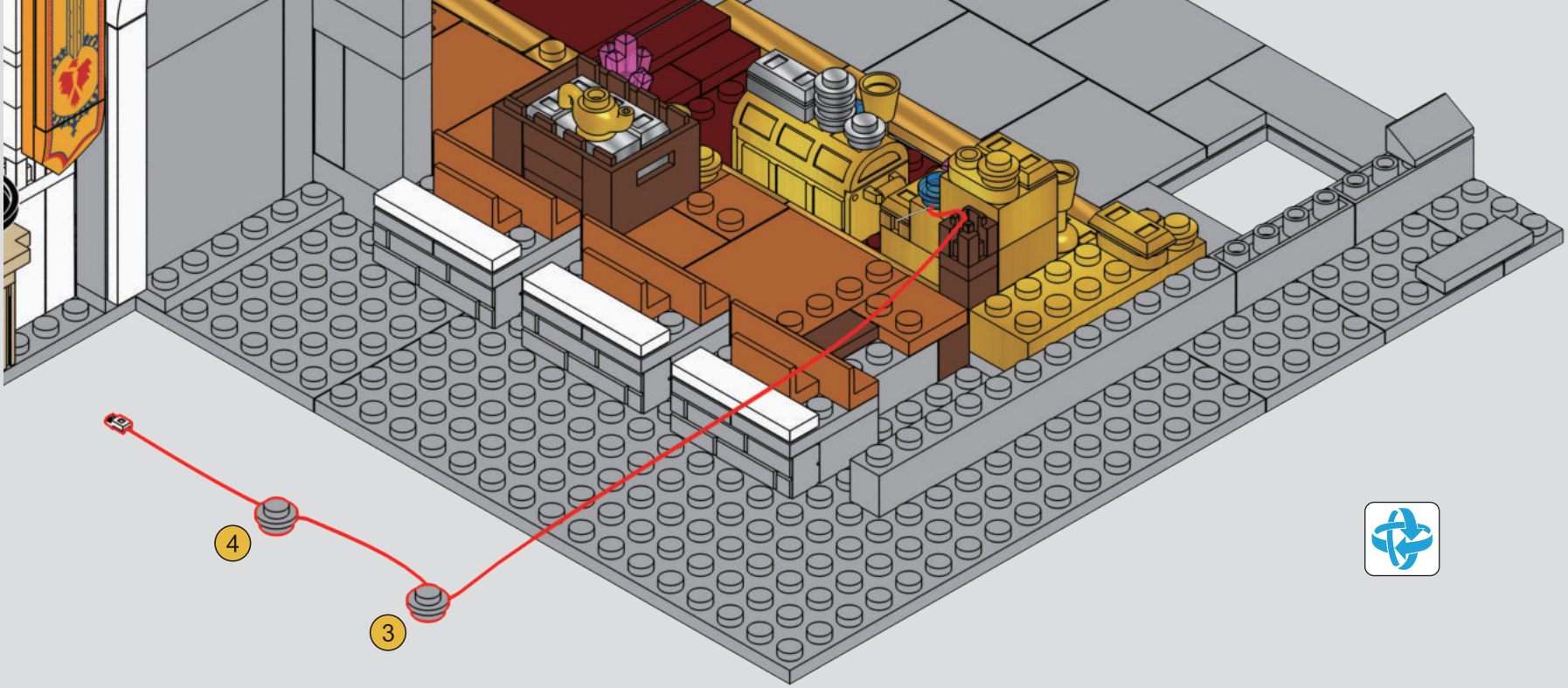

2

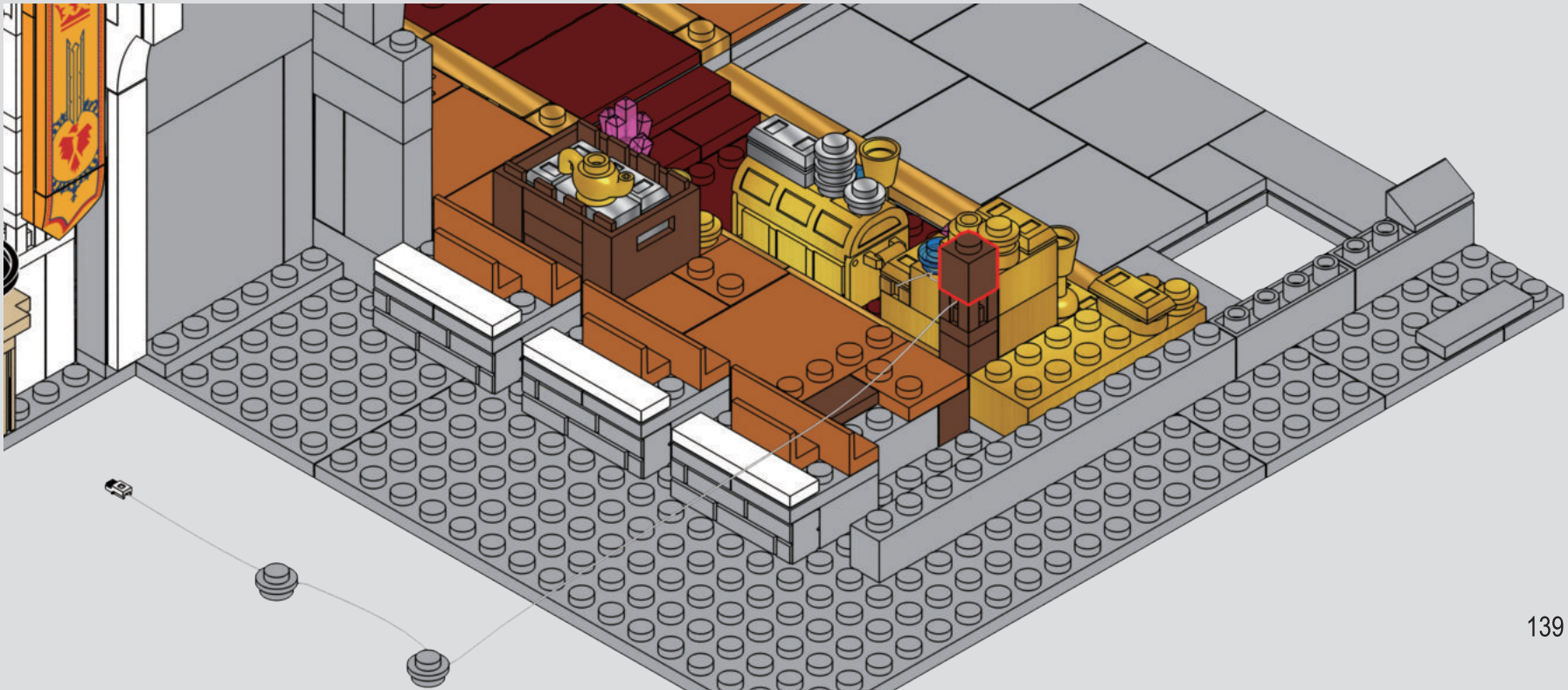



170

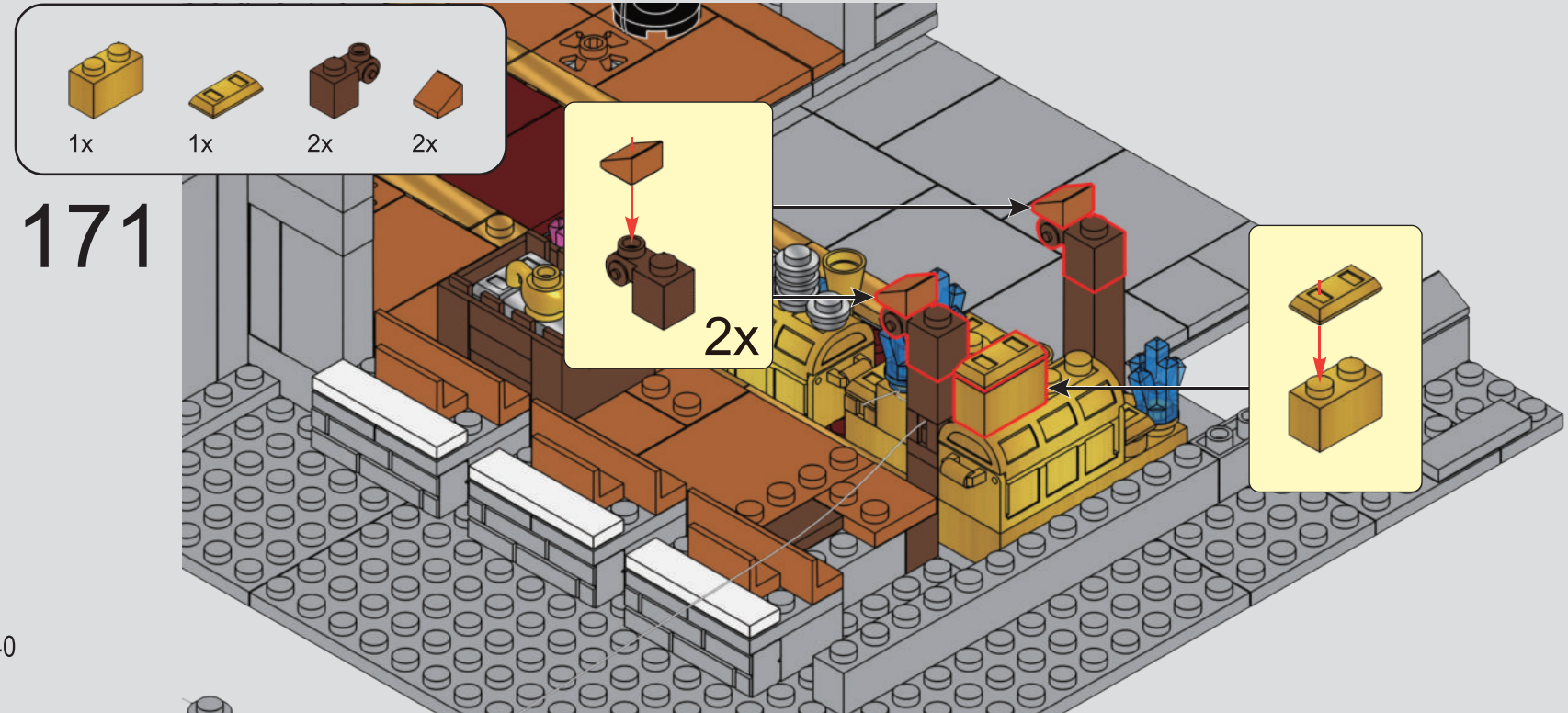

171

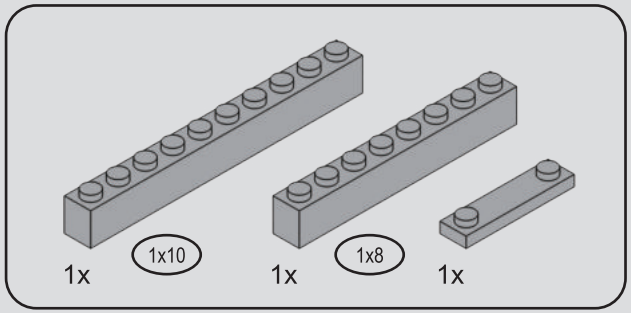

172

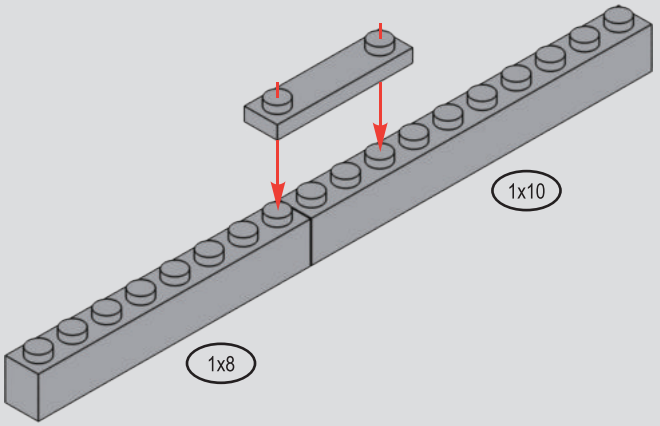

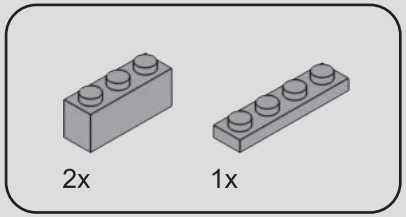

173

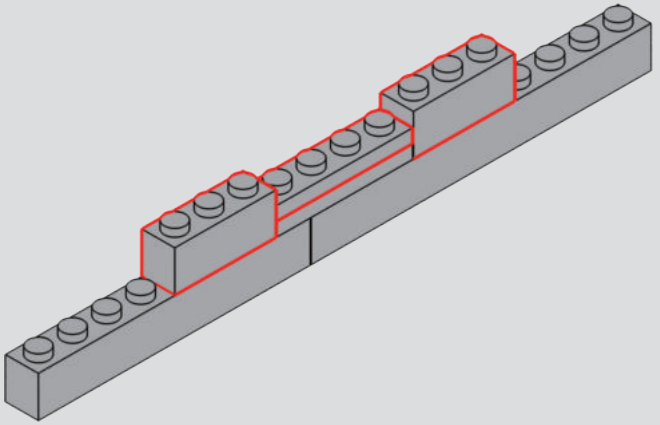

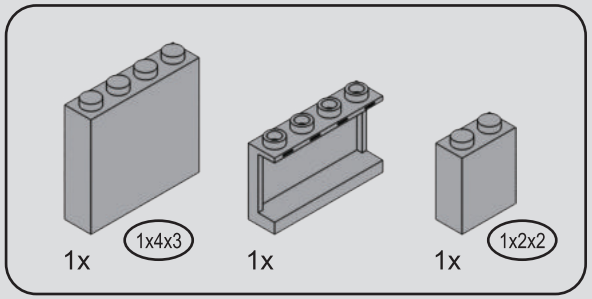

174

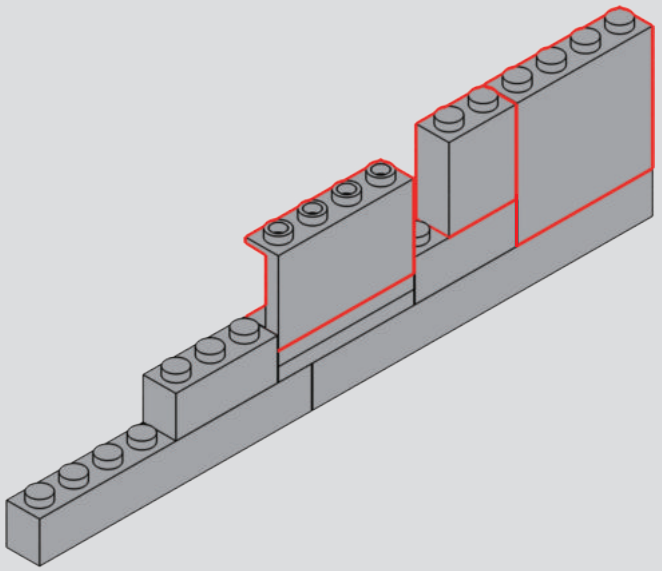

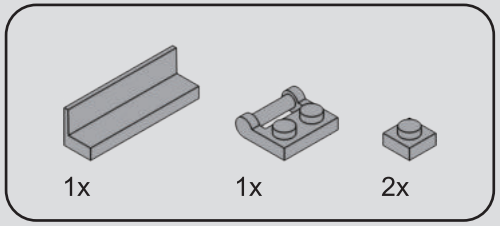

175

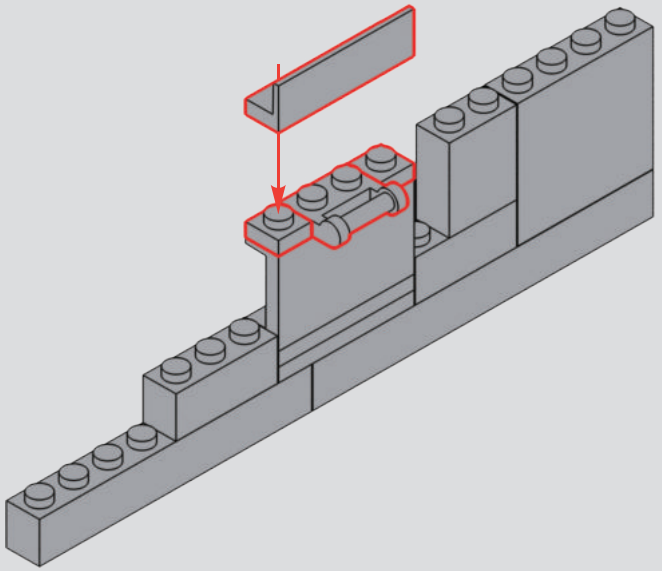

176

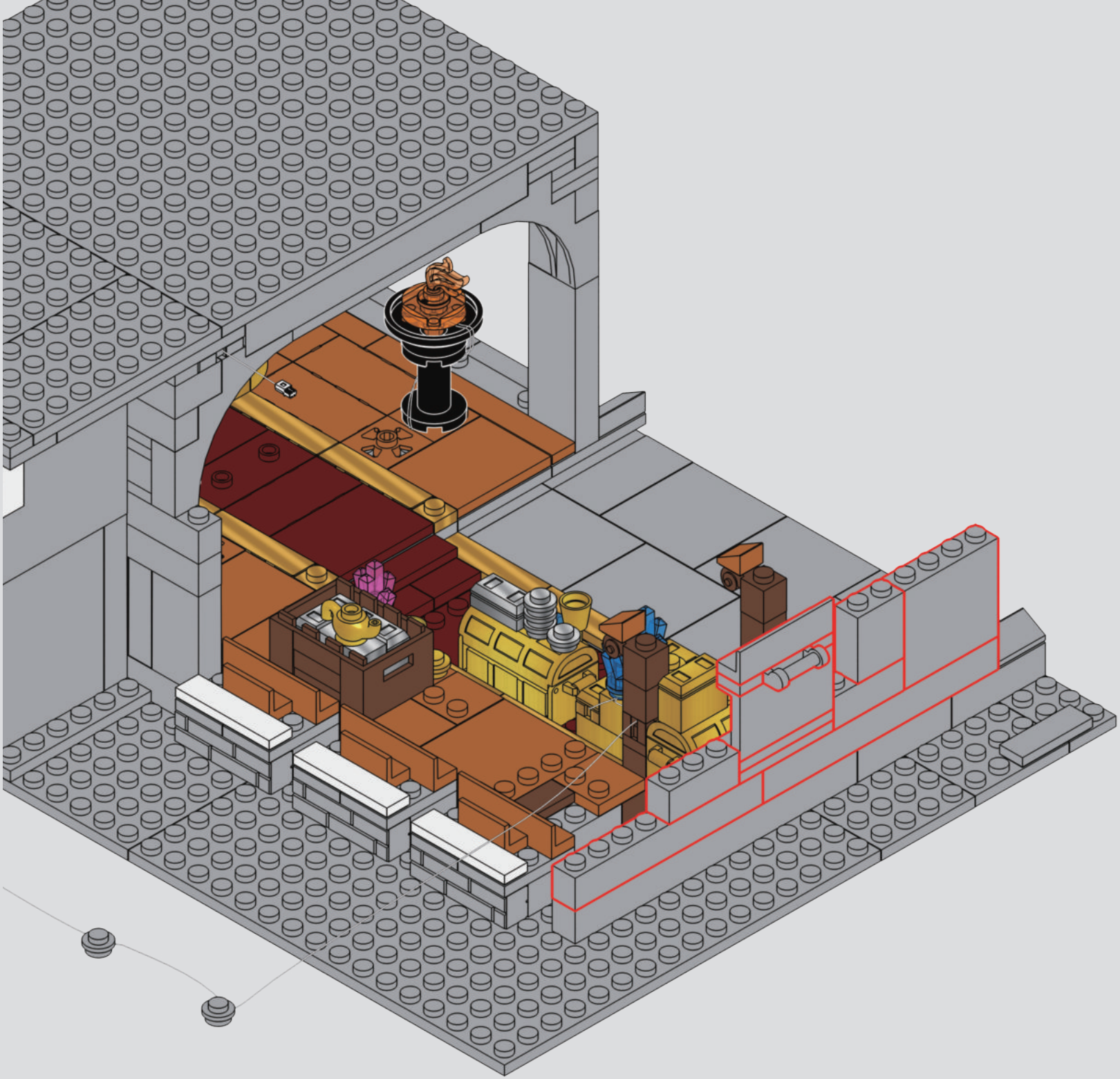

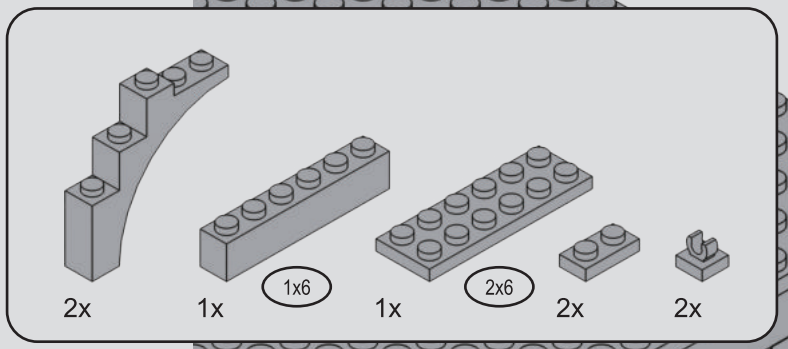

177

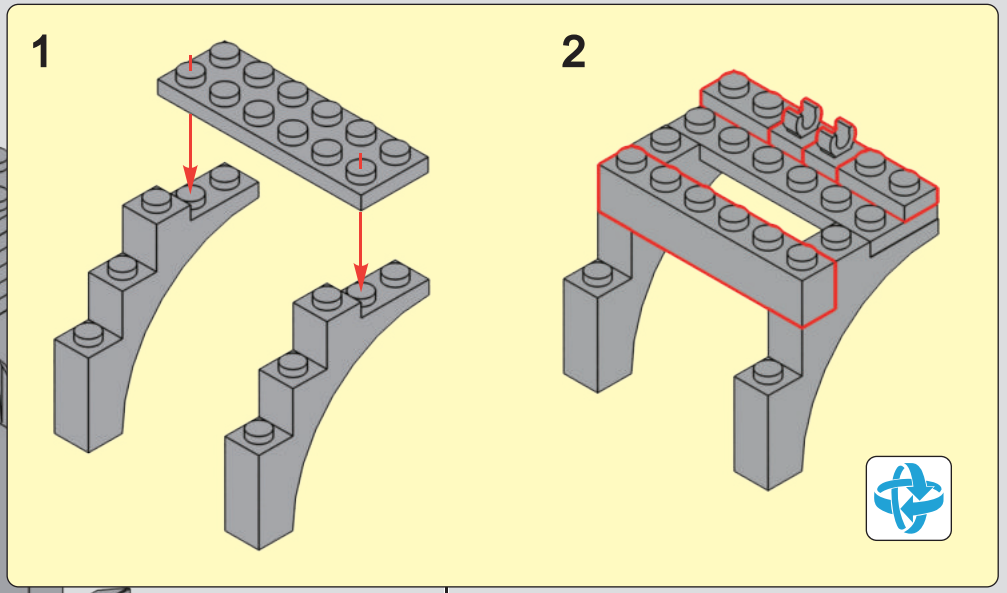

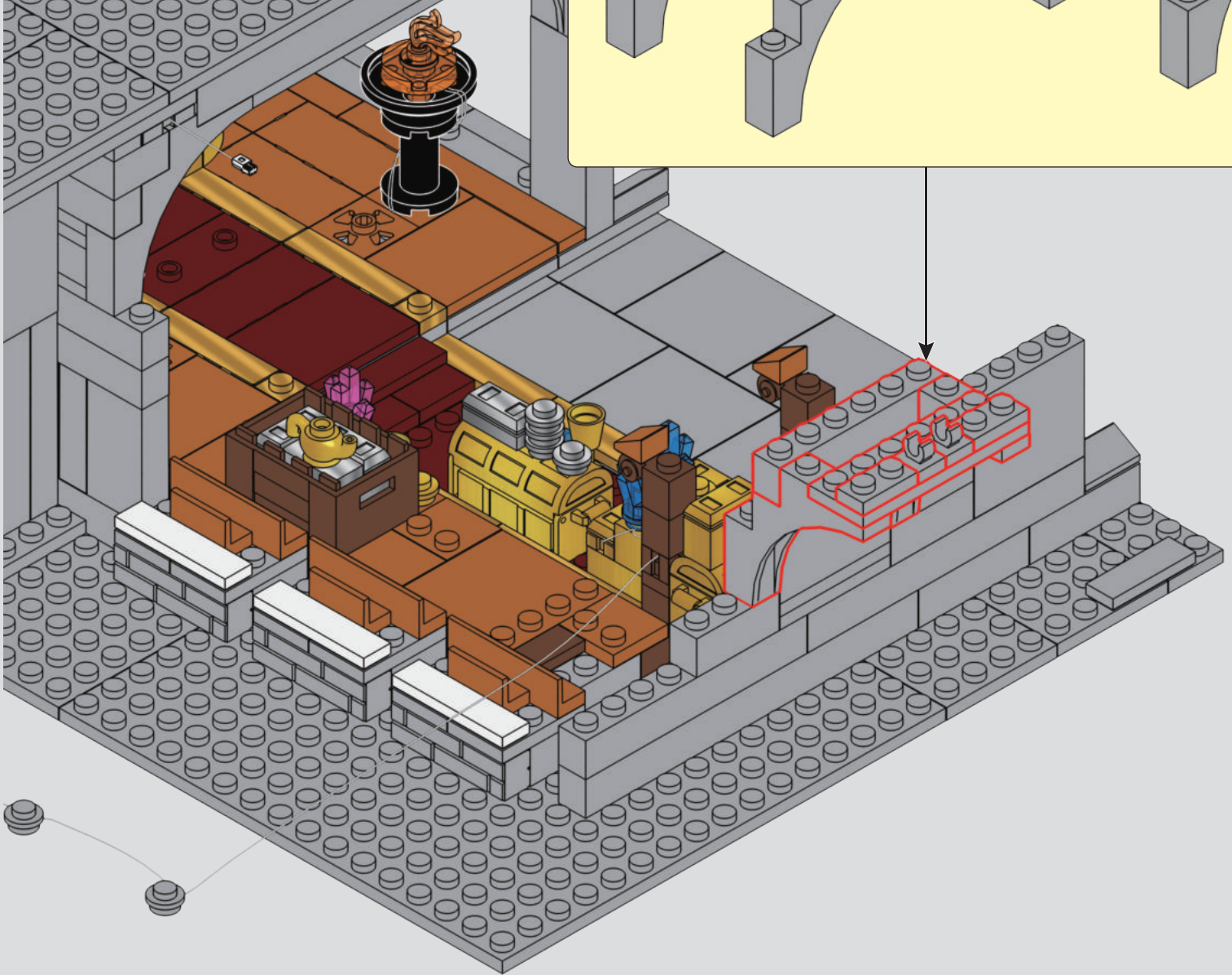

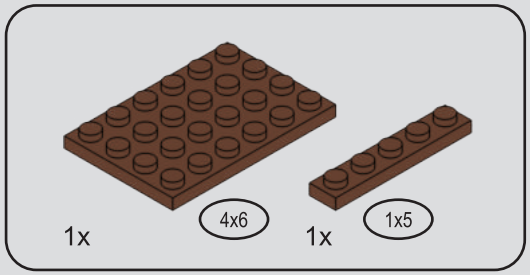

178

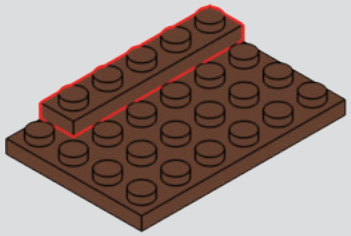

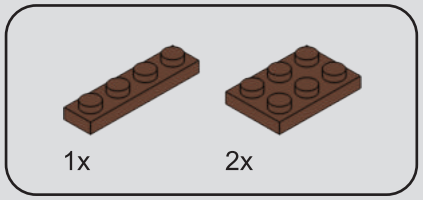

179

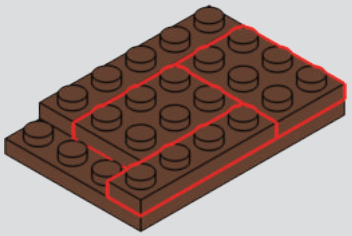

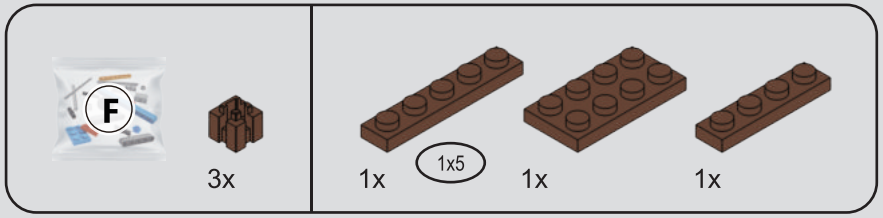

180

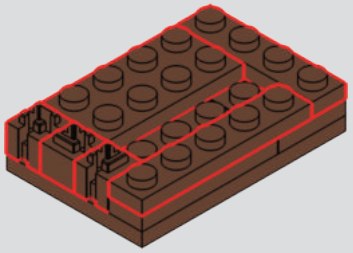

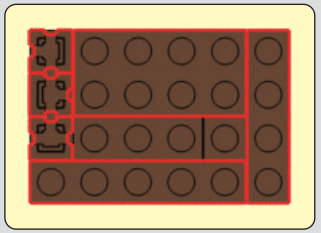

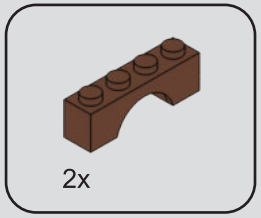

181

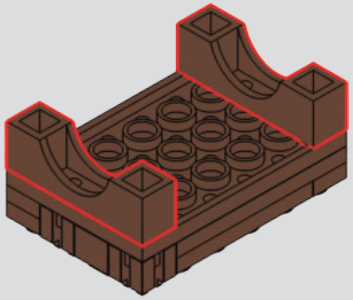

182

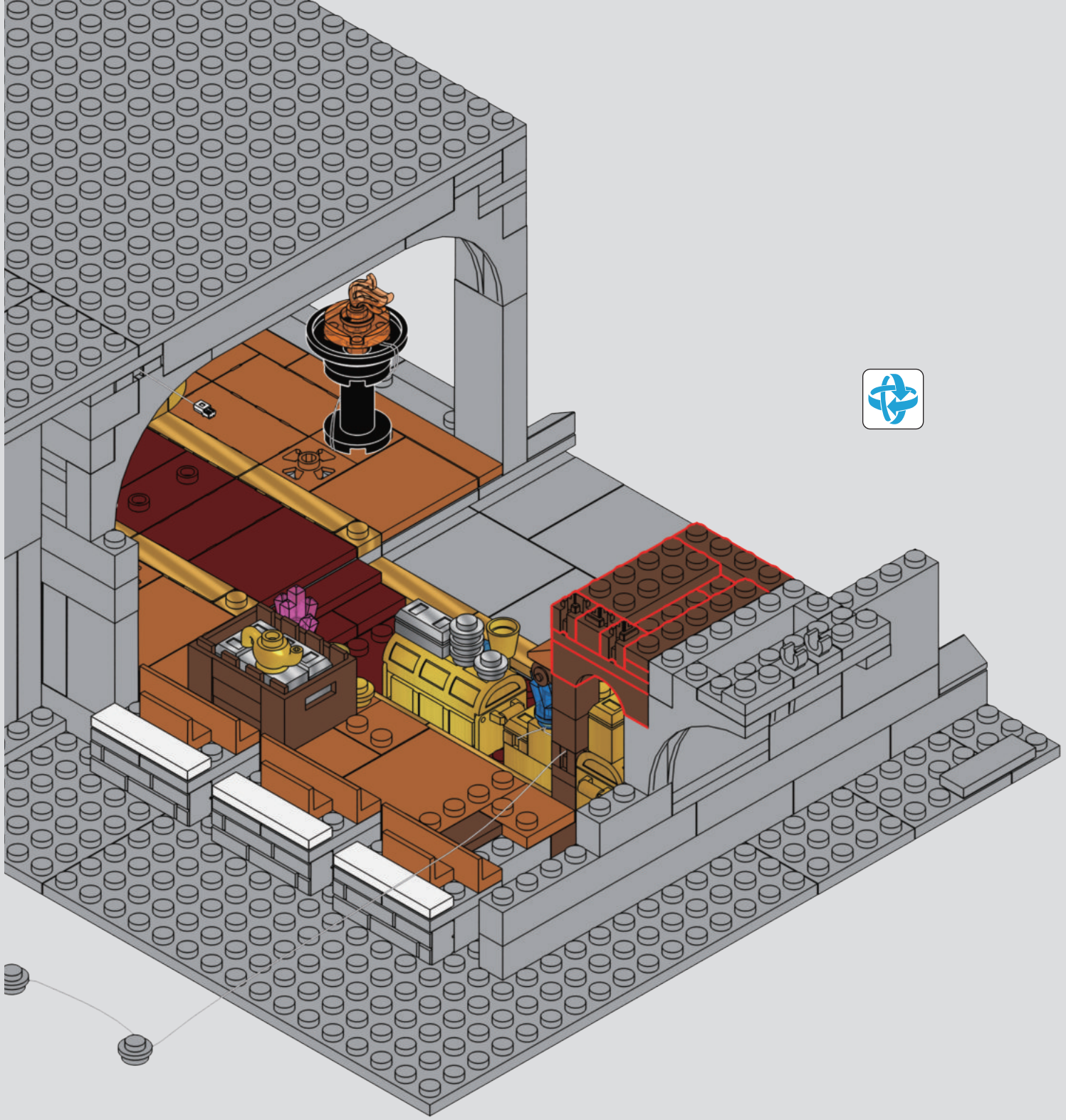

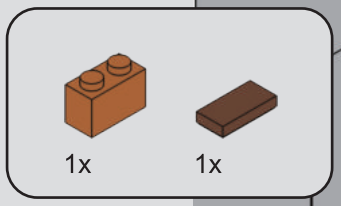

183

1

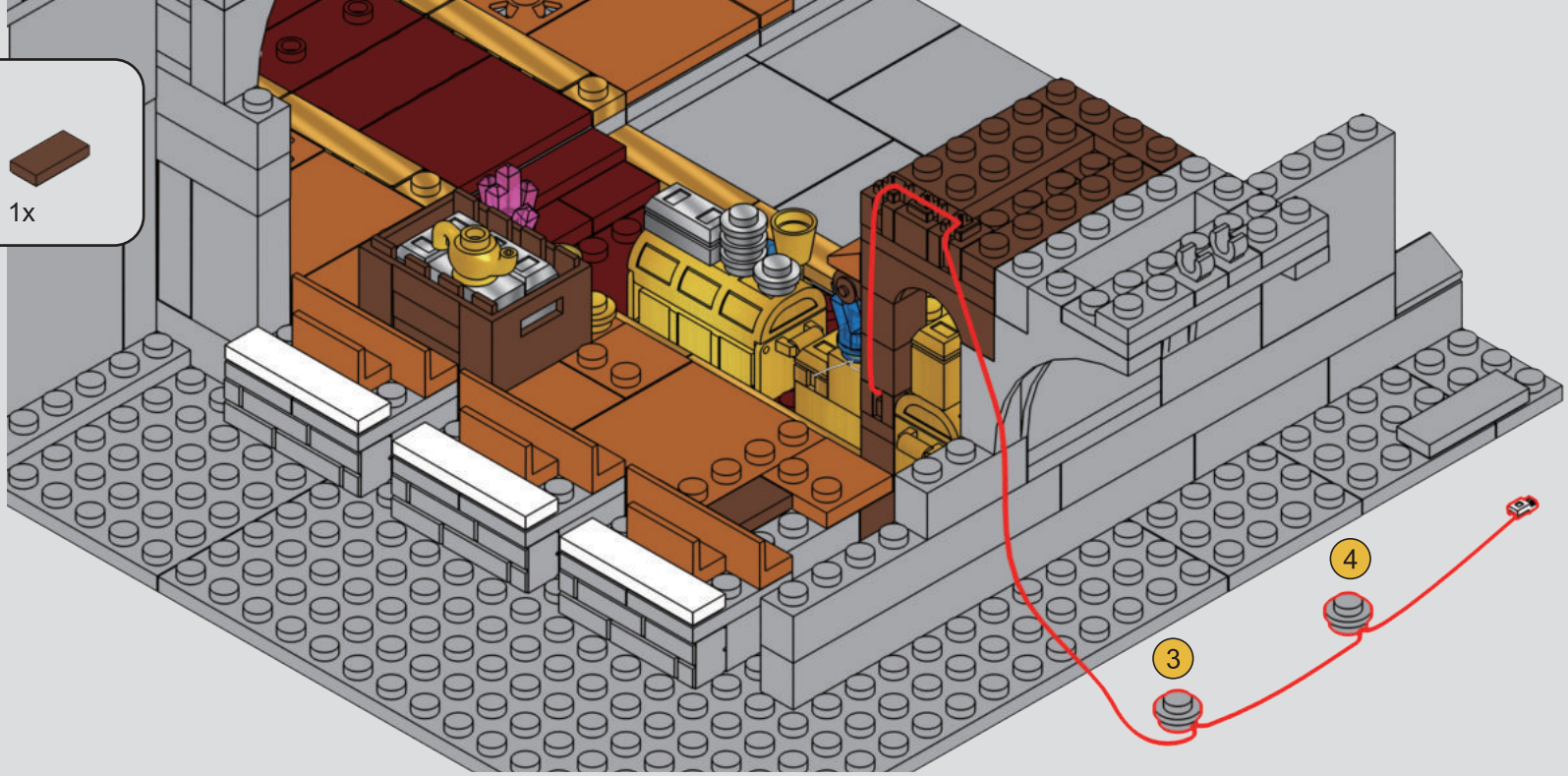

2

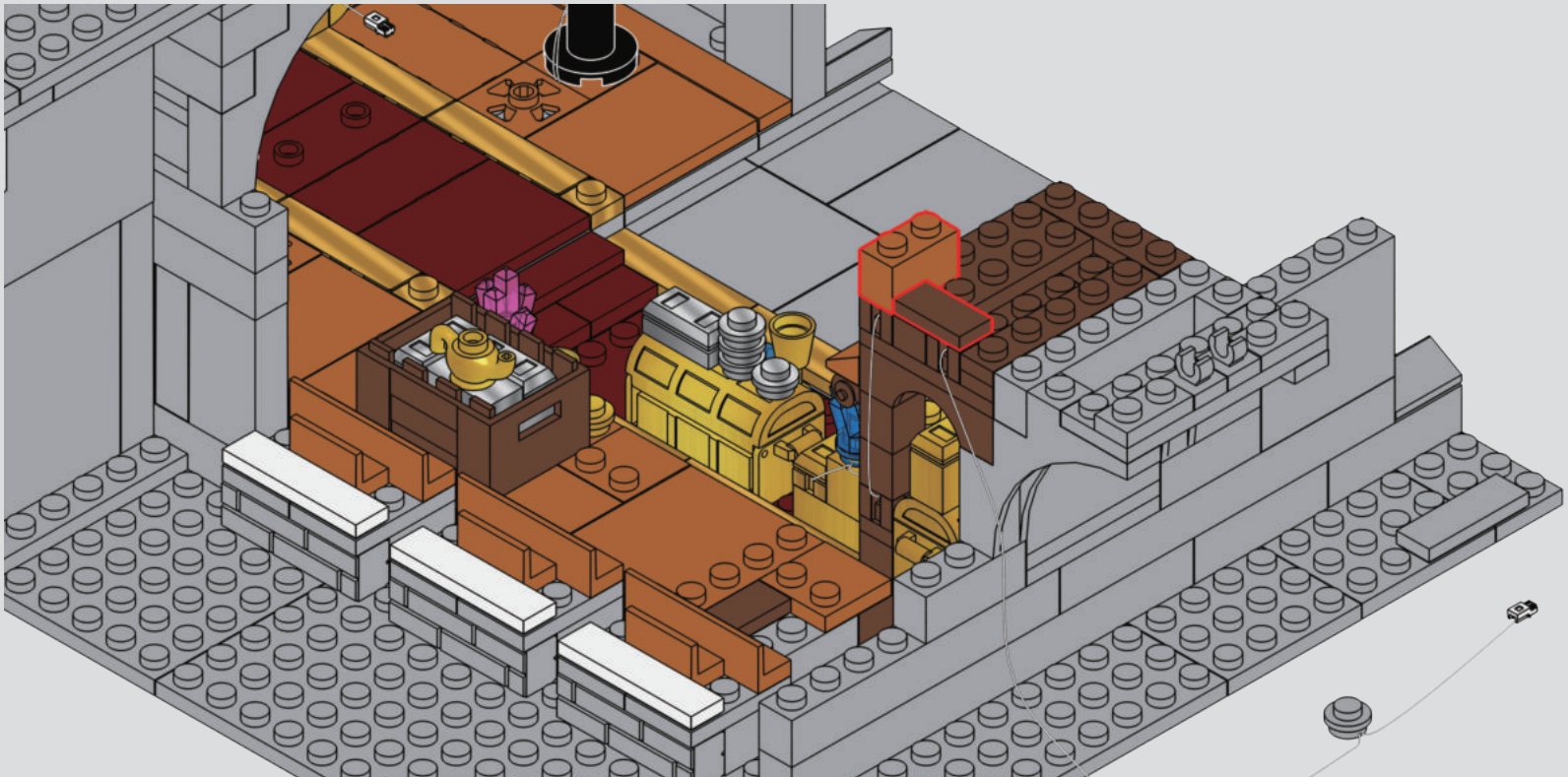

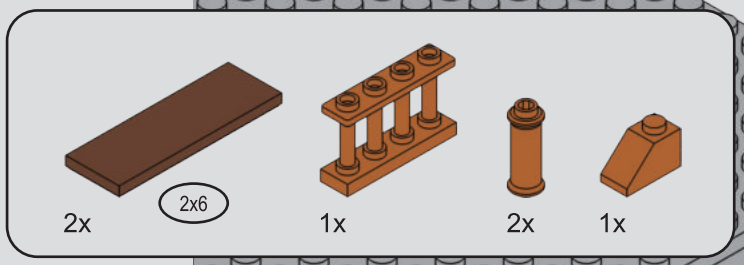

184

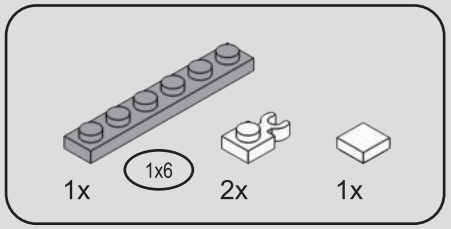

185

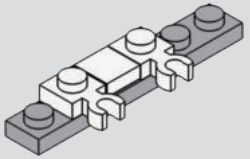

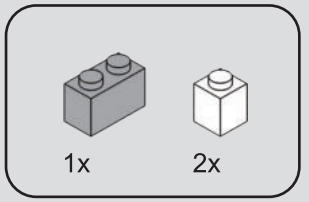

186

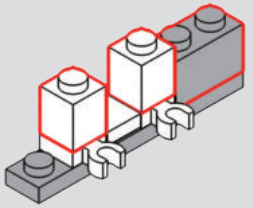

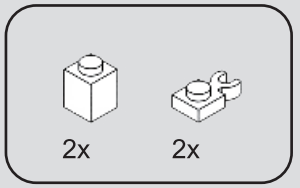

187

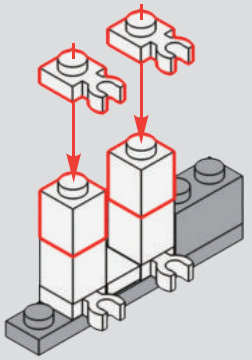

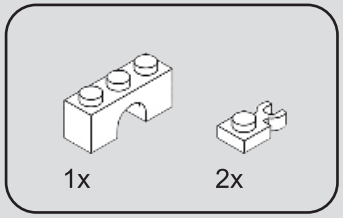

188

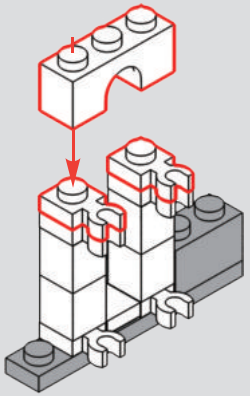

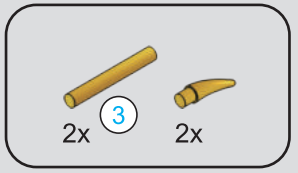

189

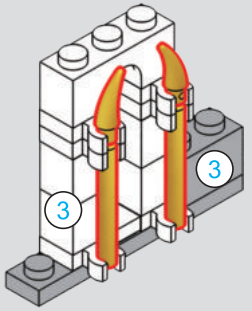



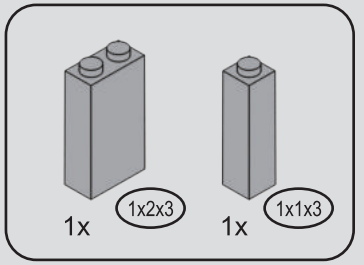

190

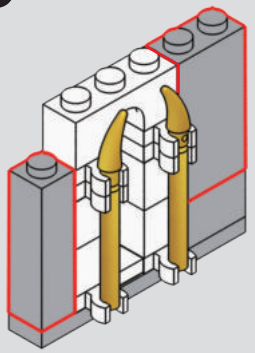

191



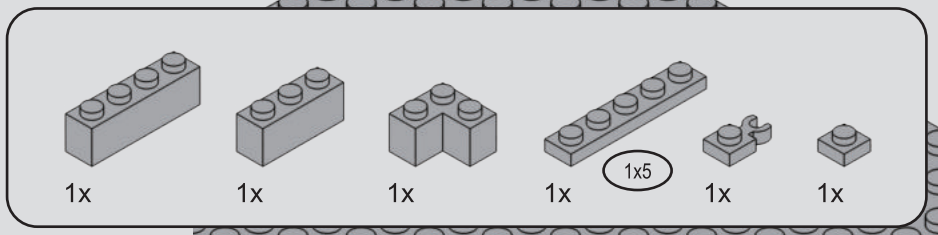

192

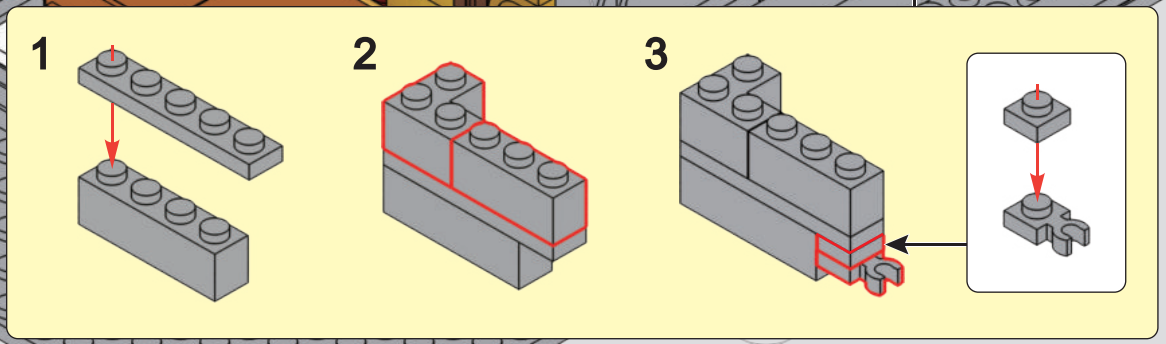

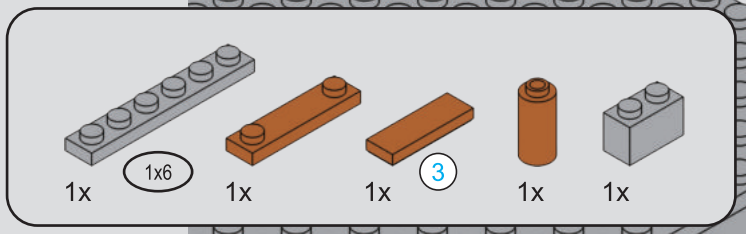

193

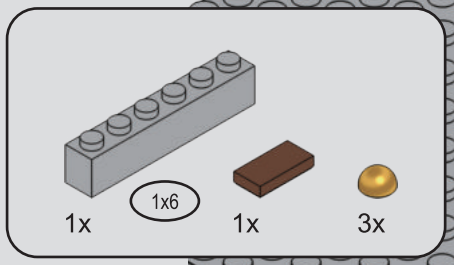

194

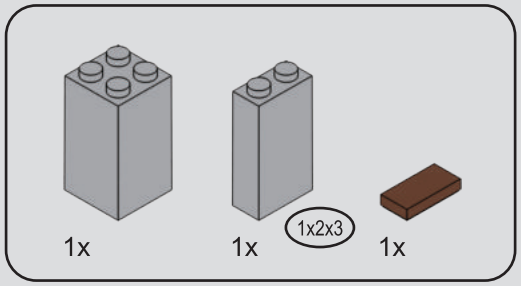

195

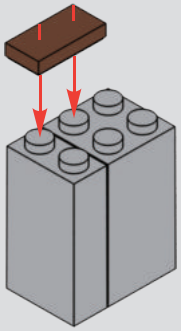

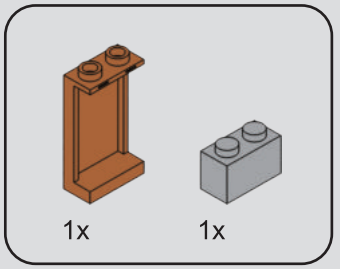

196

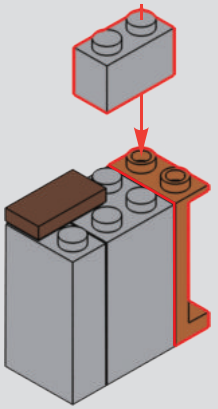

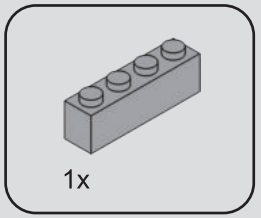

197

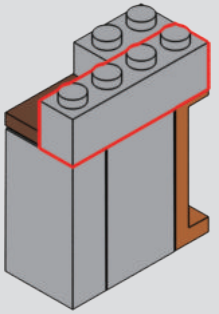

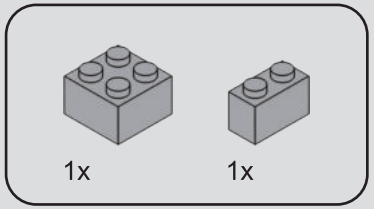

198

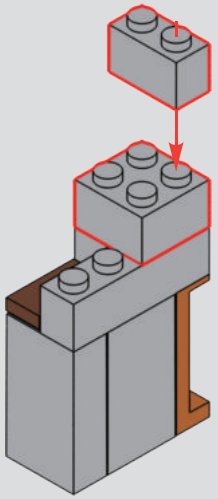

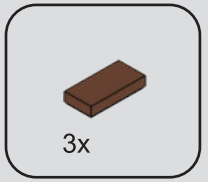

199

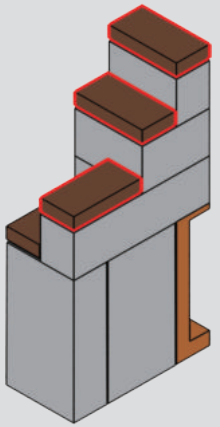

200

1

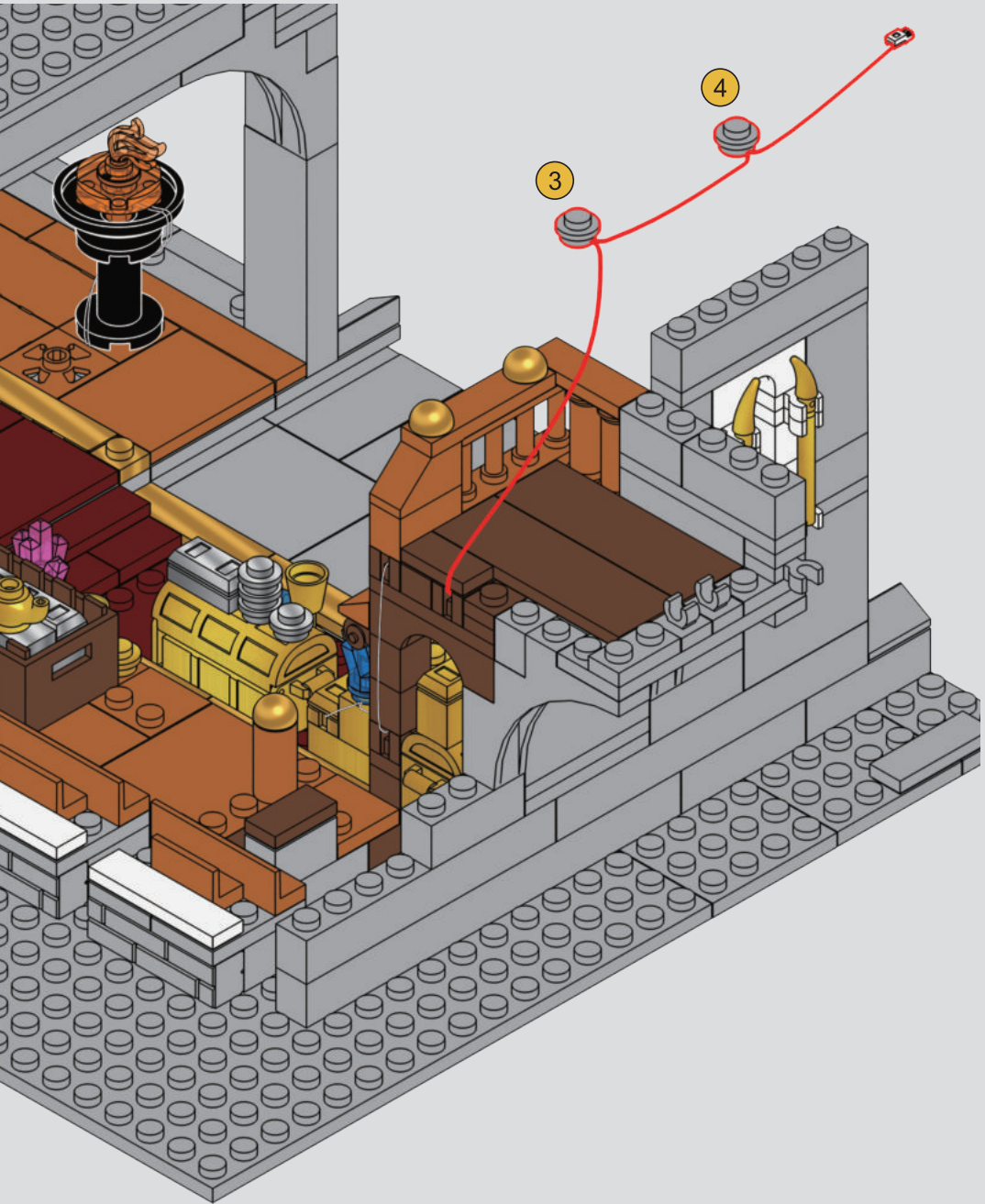

2

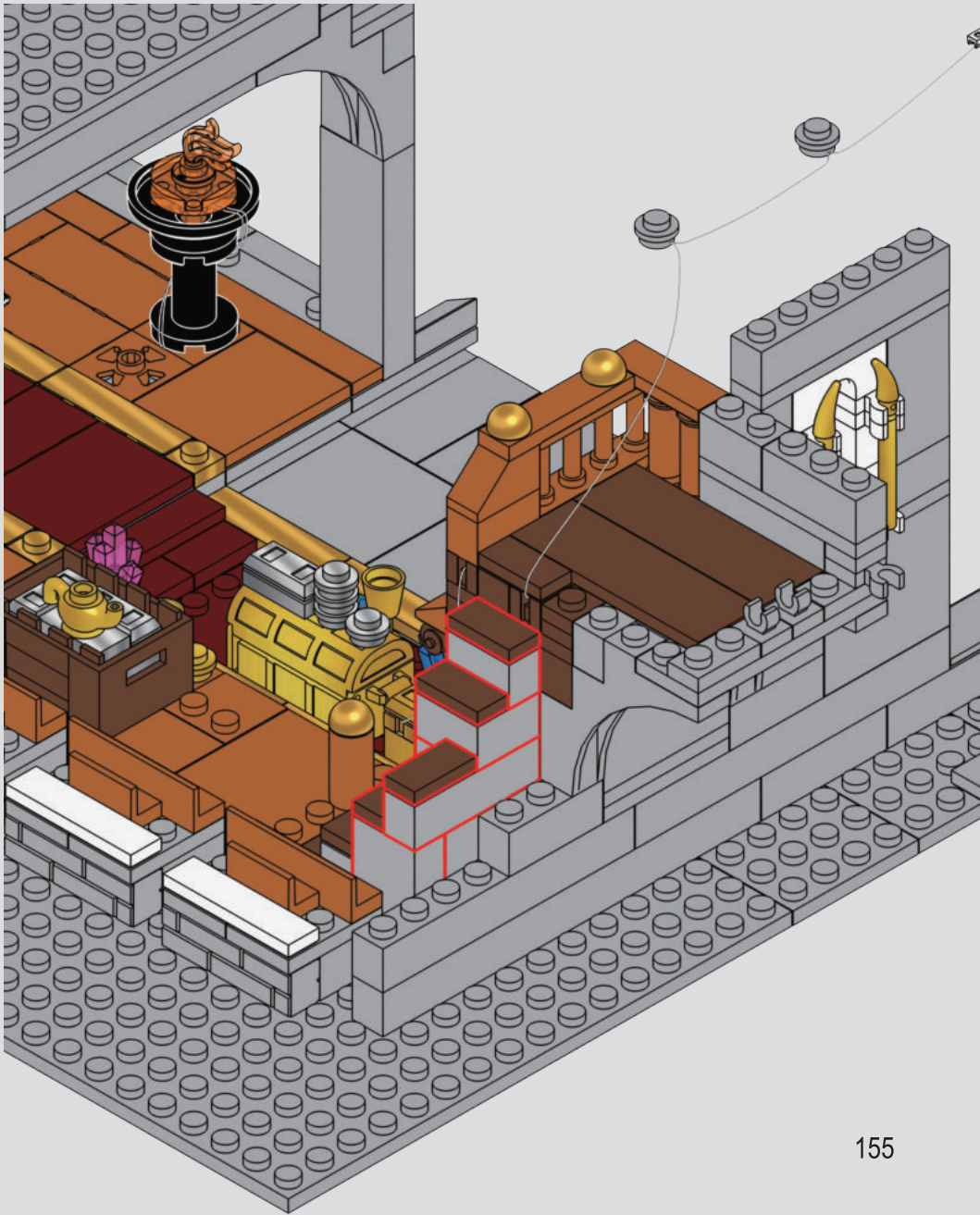

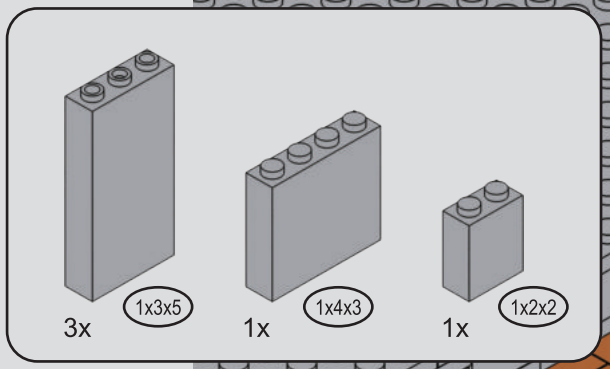

201

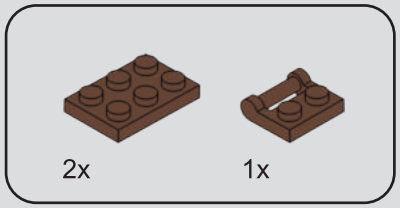

202

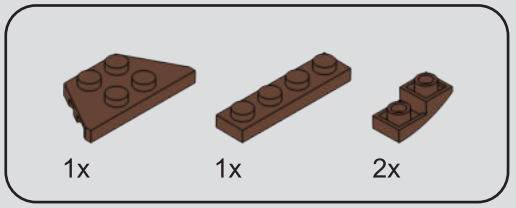

203

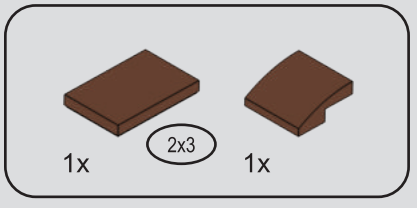

204

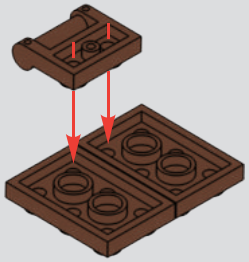

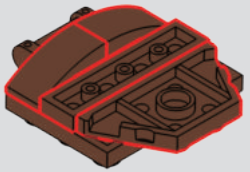

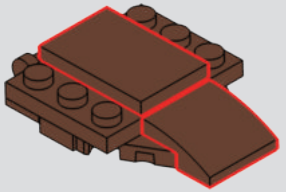



205

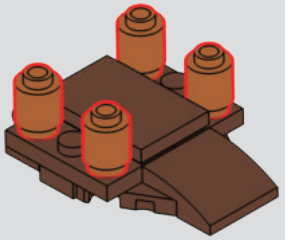

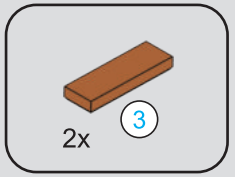

206

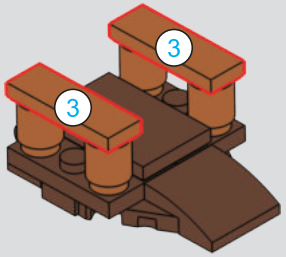

207



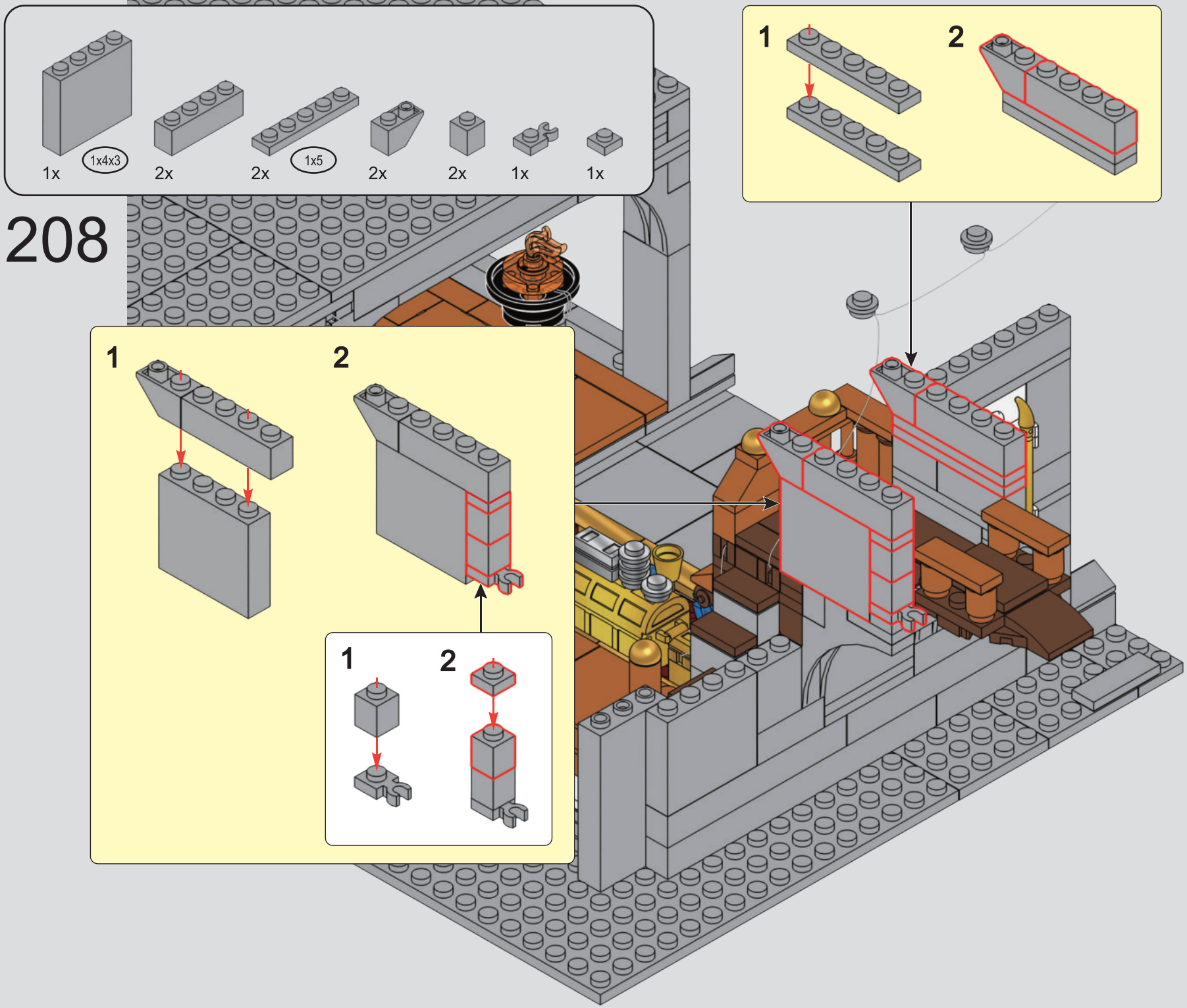
1x
1x4x3
2x
2x
1x5
2x
2x
1x
1x
208
1
2
1
2
1
2

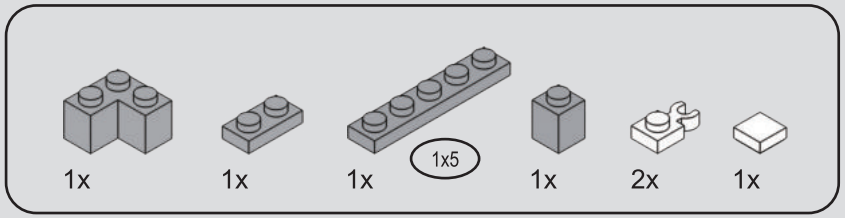

209

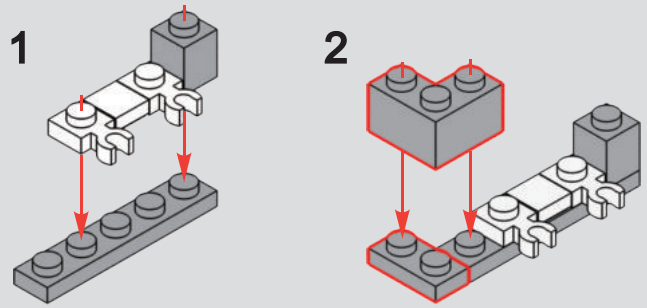

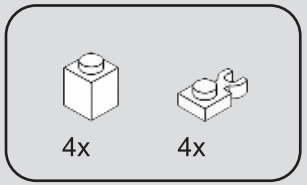

210

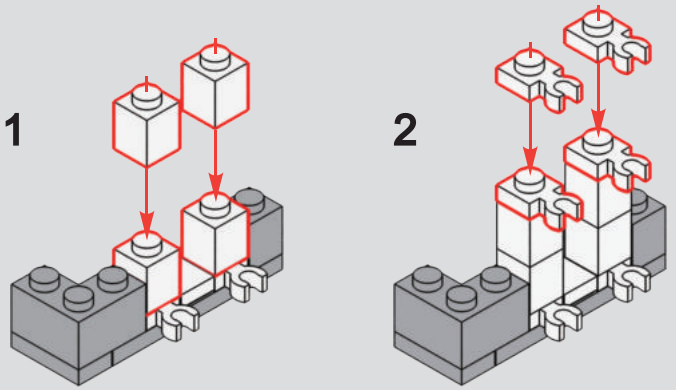

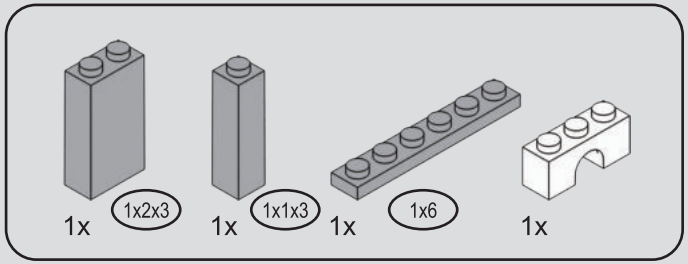

211

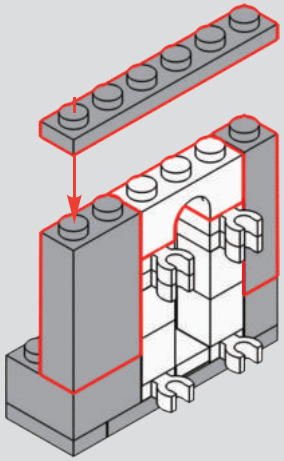

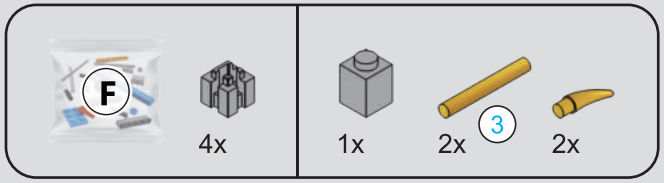

212

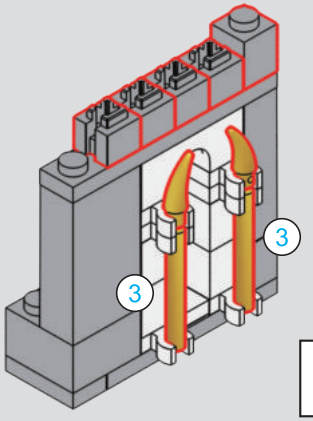



213



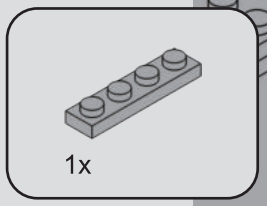

214

1

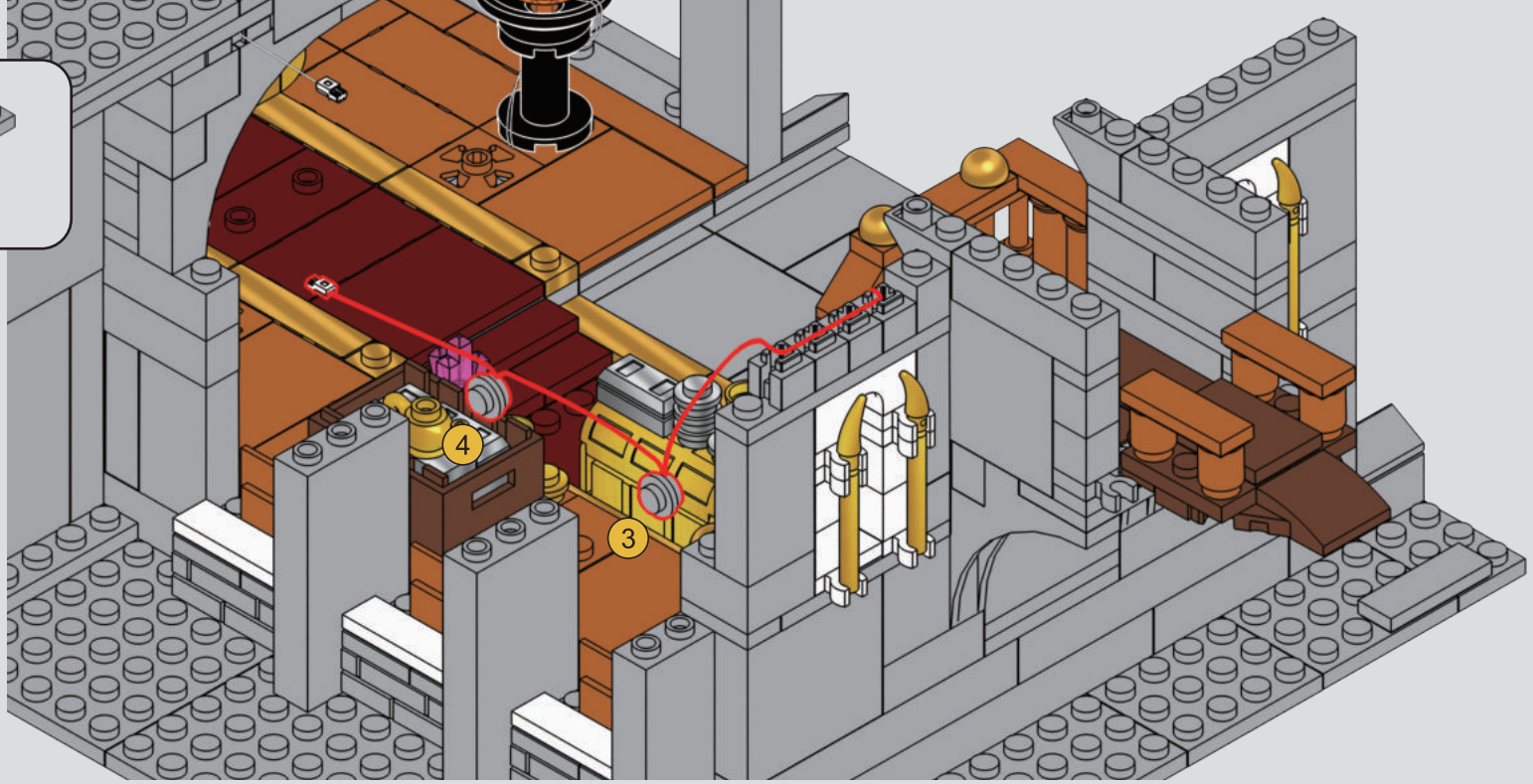

2

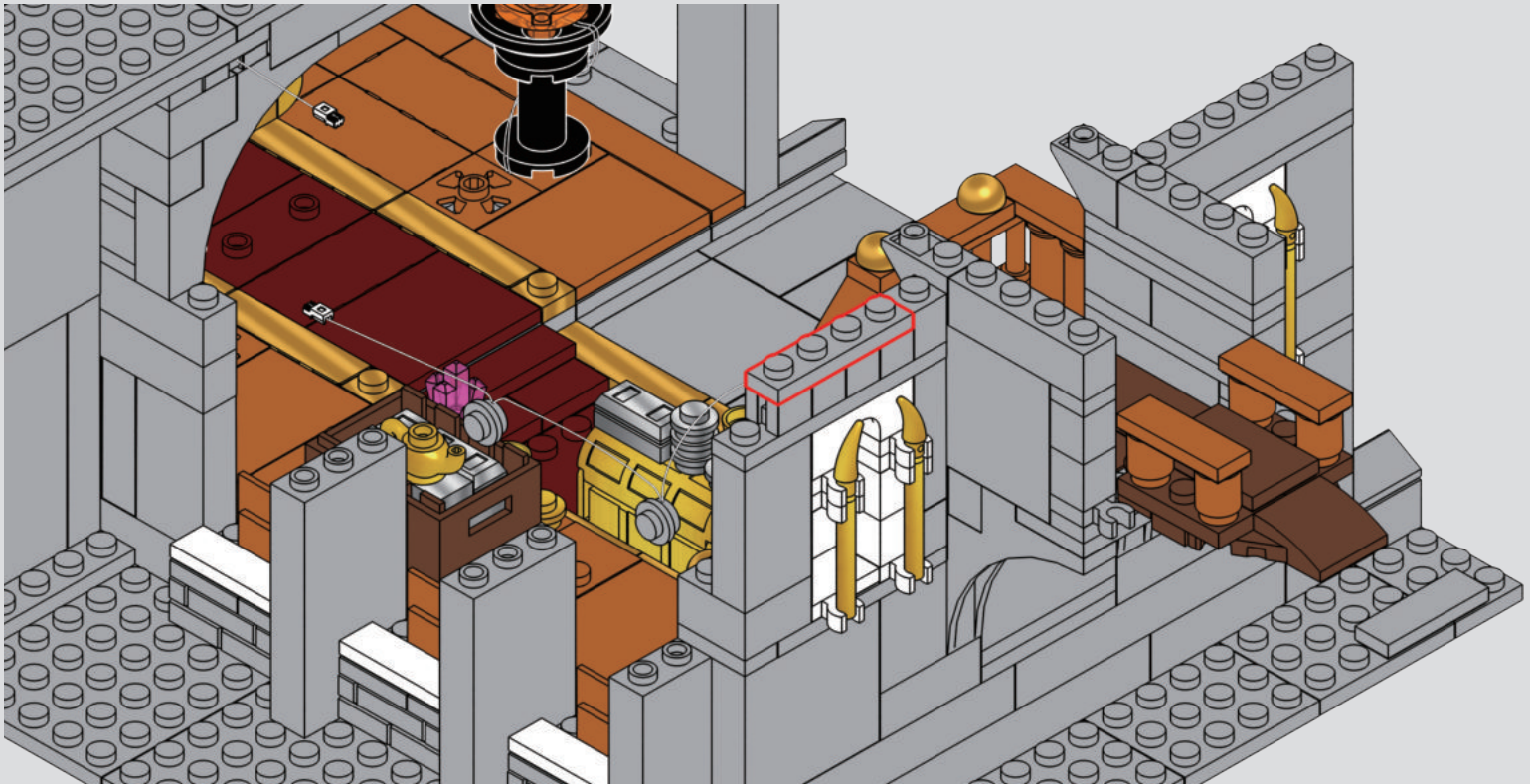

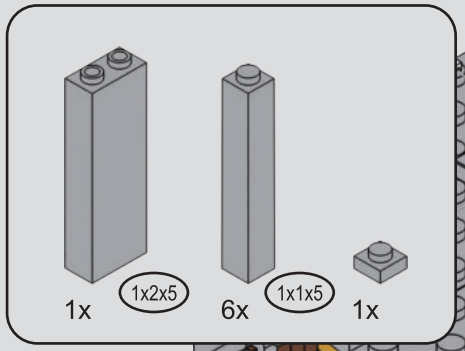

215

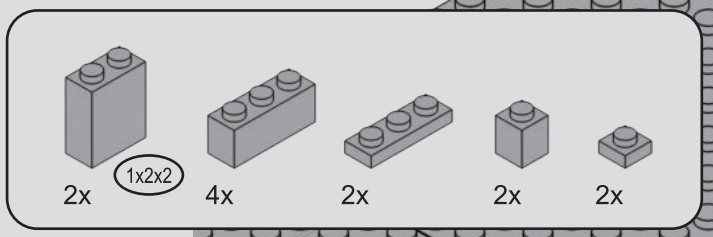

216

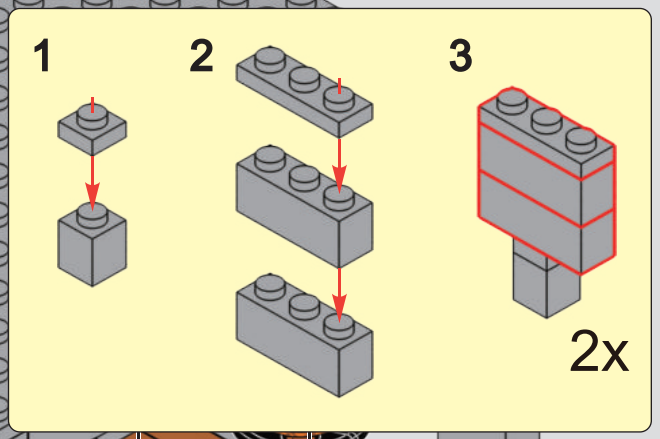

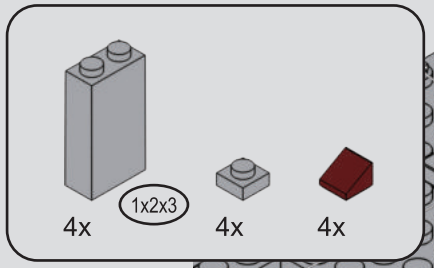

217

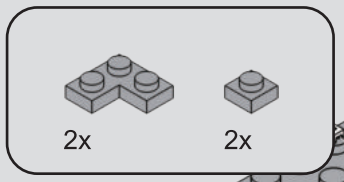

218

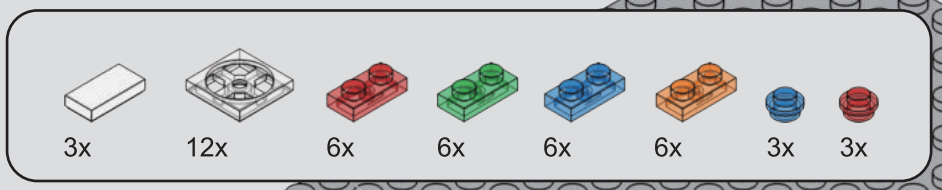

219



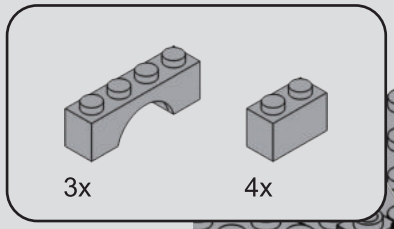

220

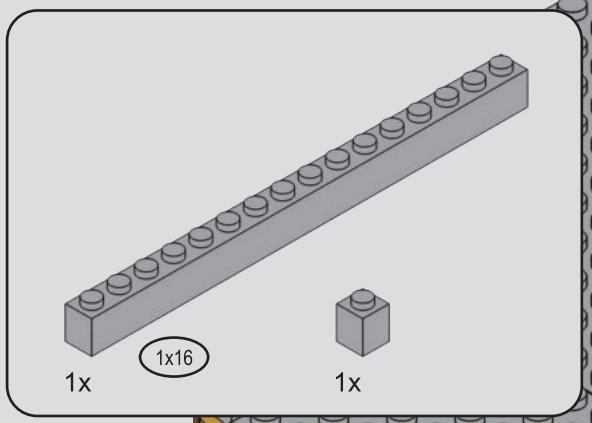

221

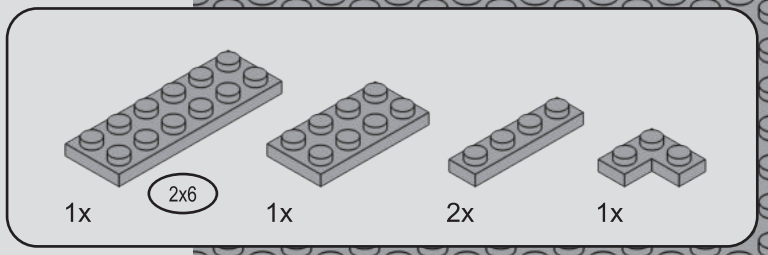

222

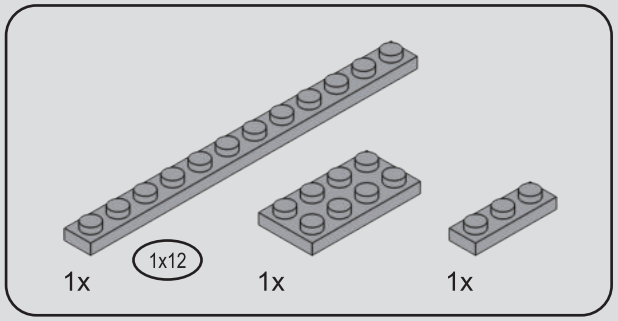

223

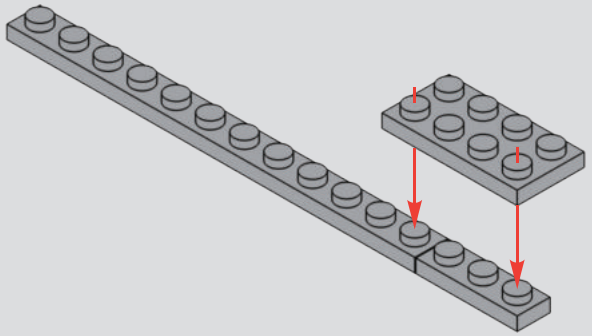

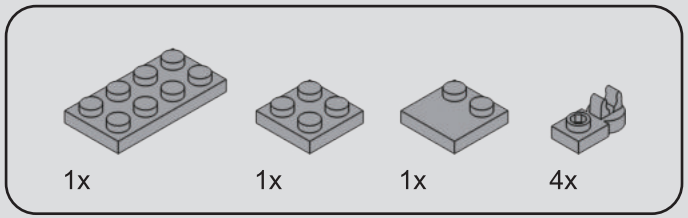

224

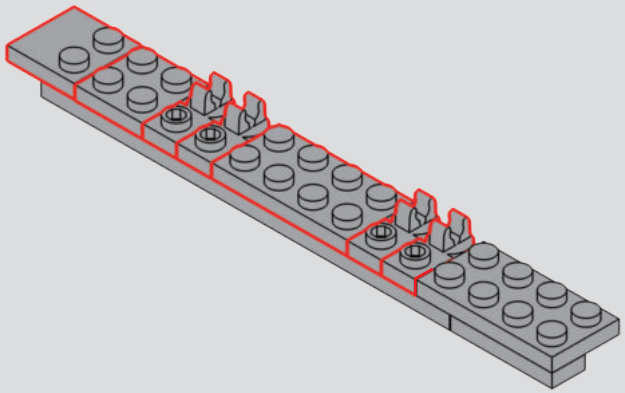

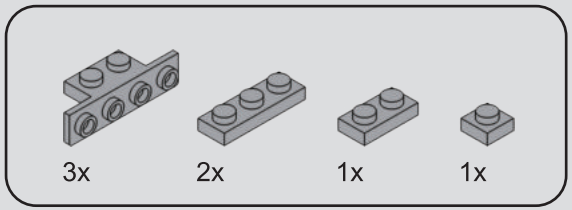

225

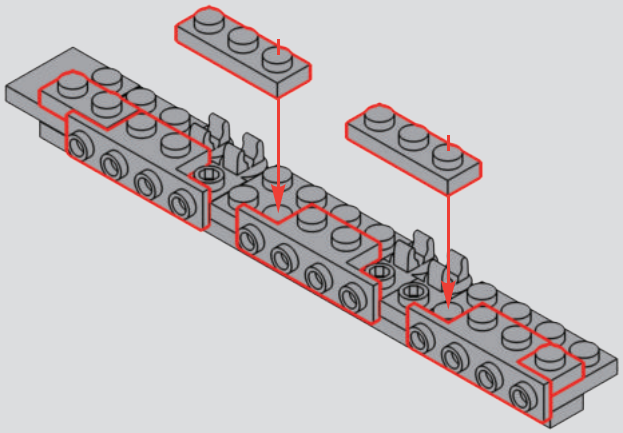

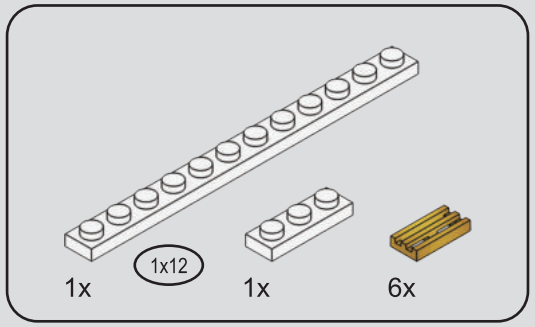

226

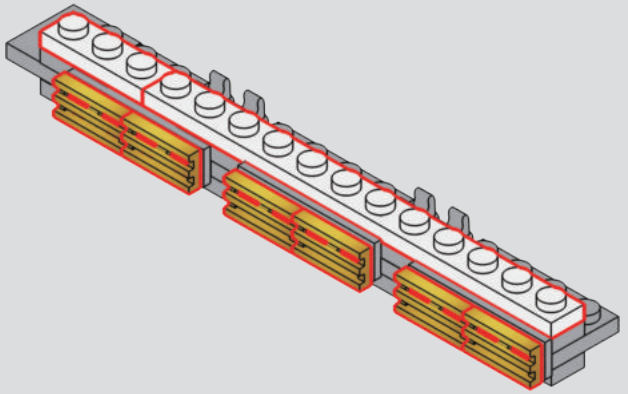

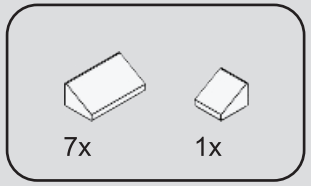

227

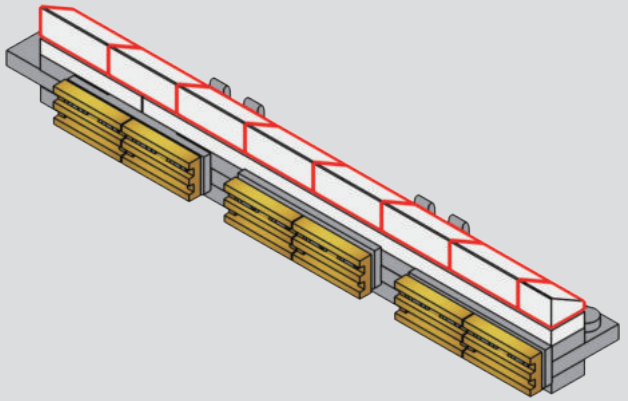

228

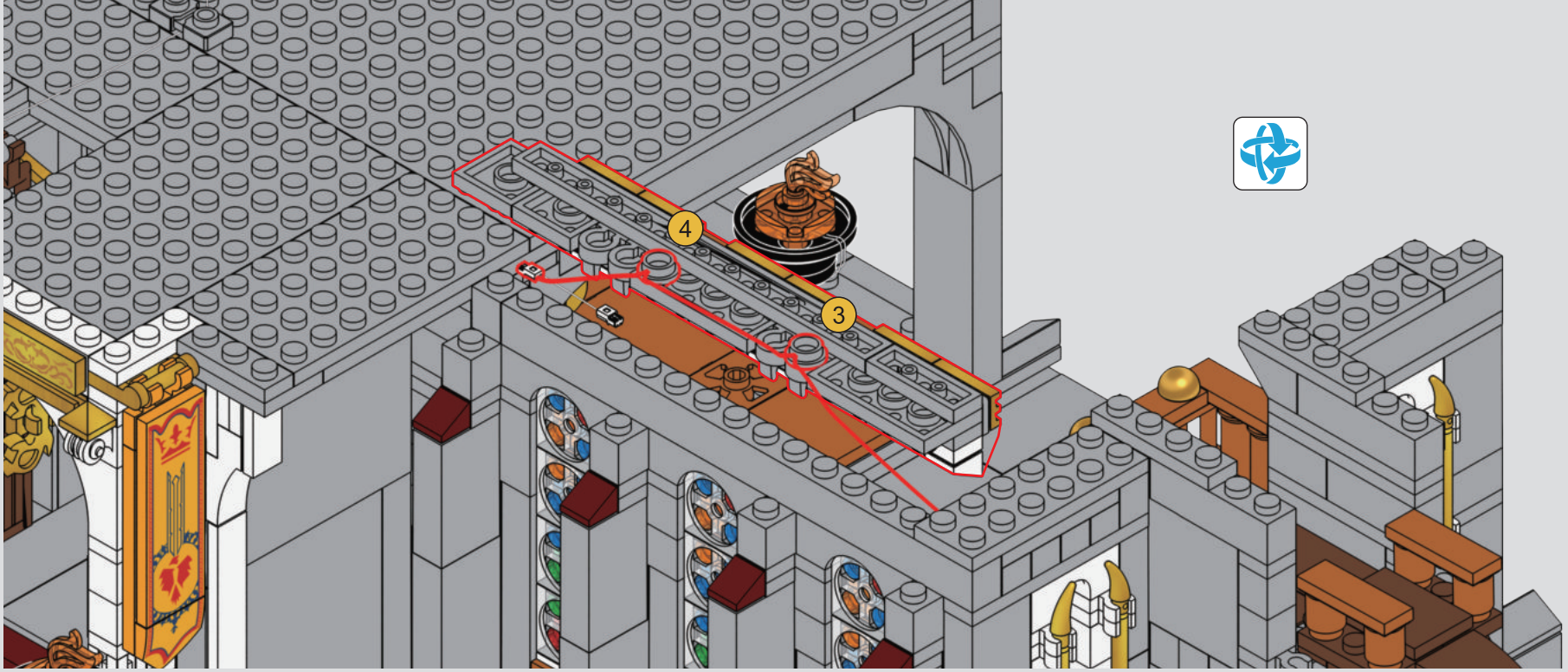

229

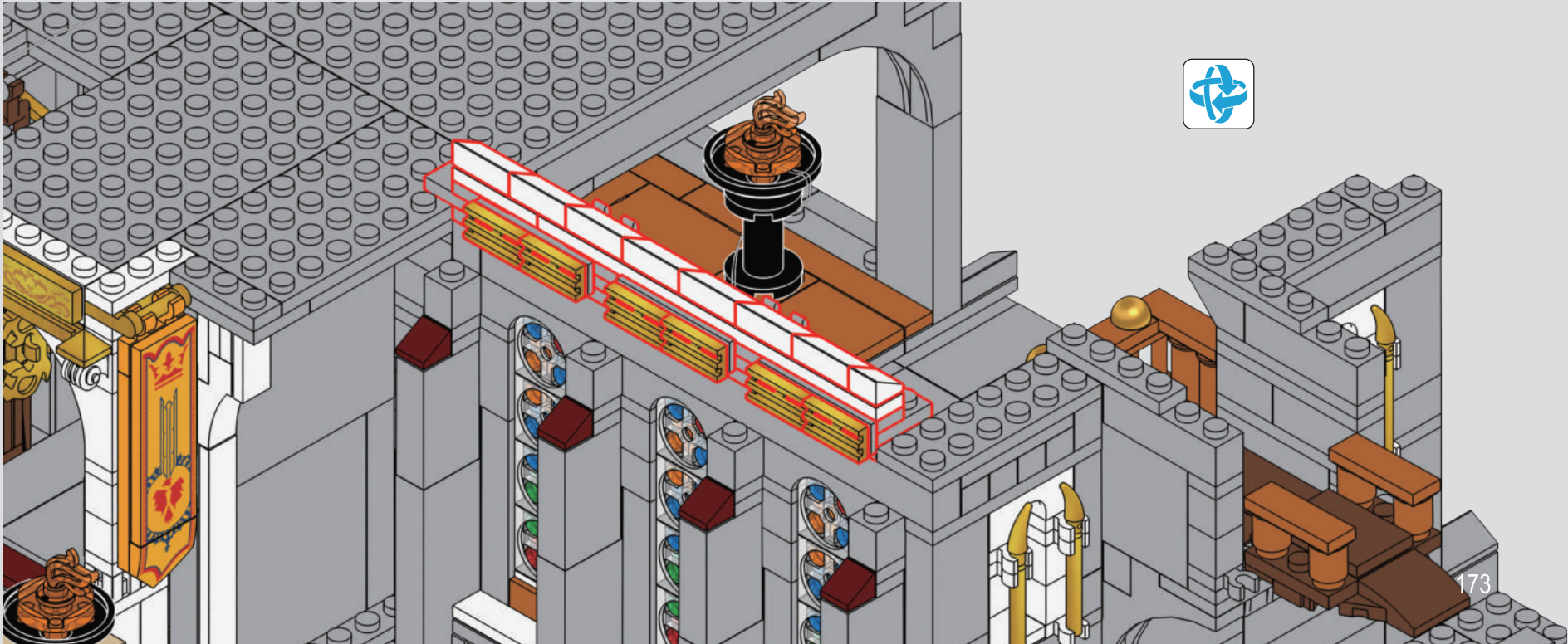

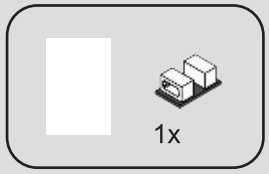

230

1

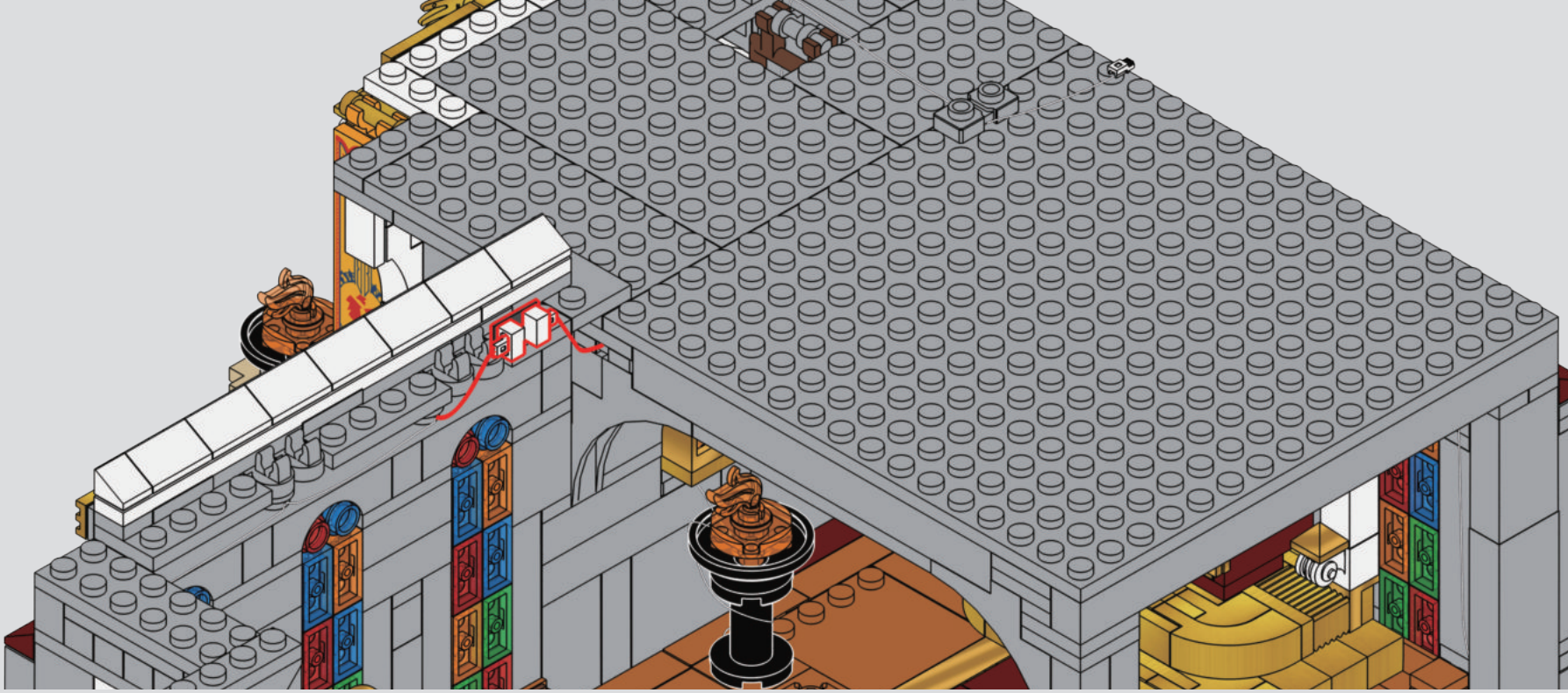

2

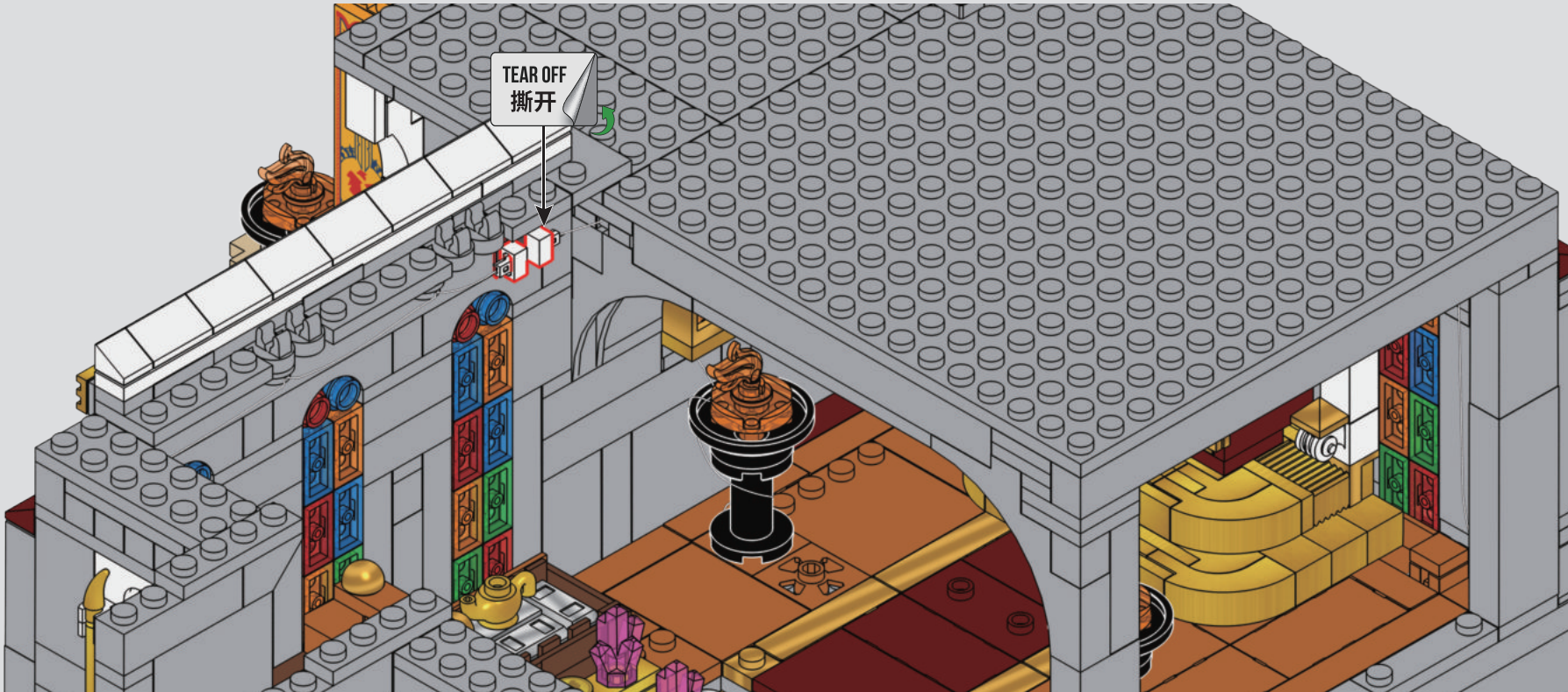

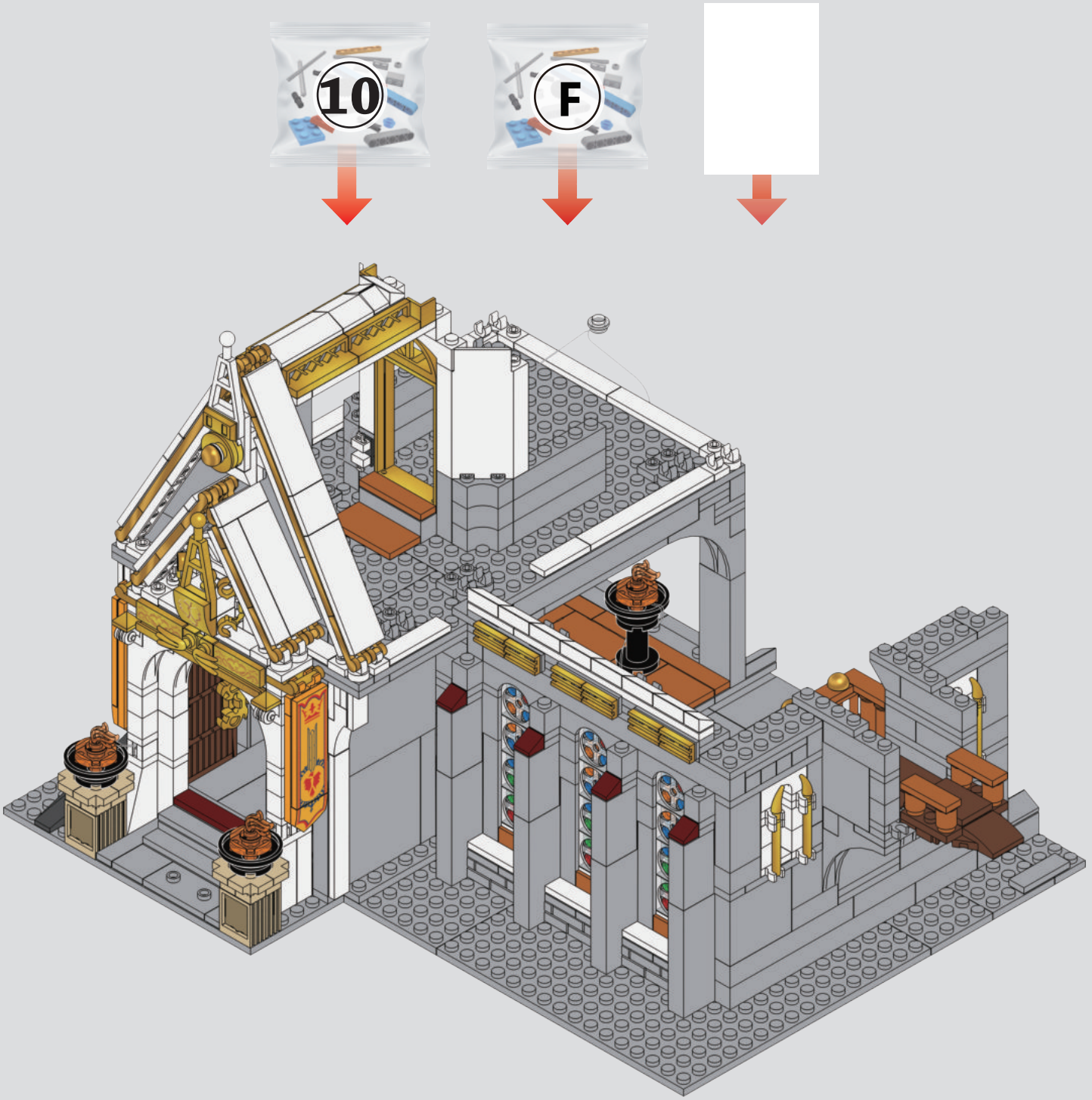
10
F

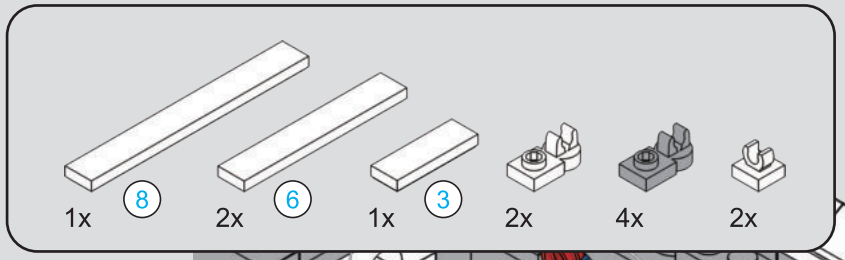



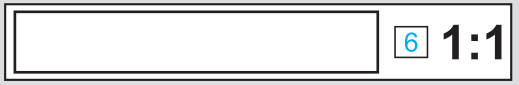

231





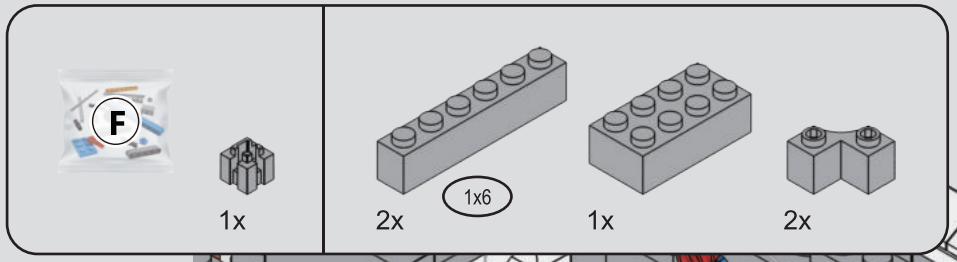

232

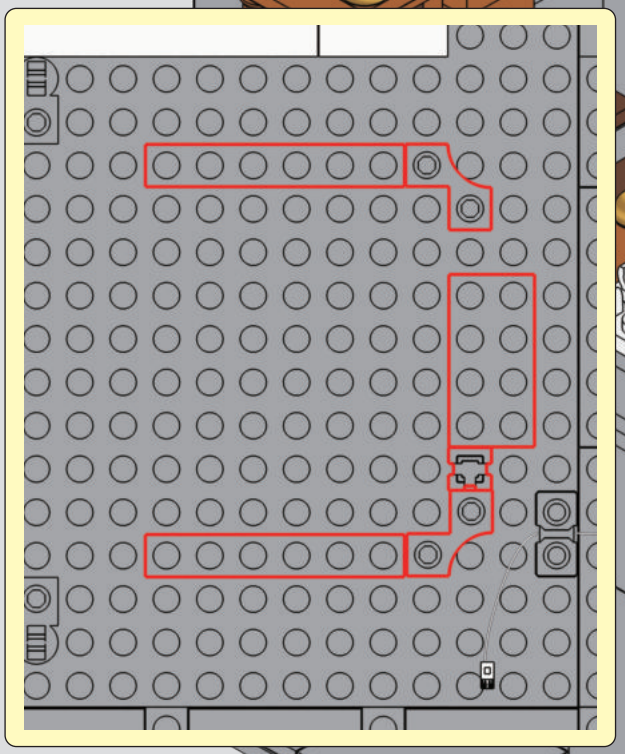

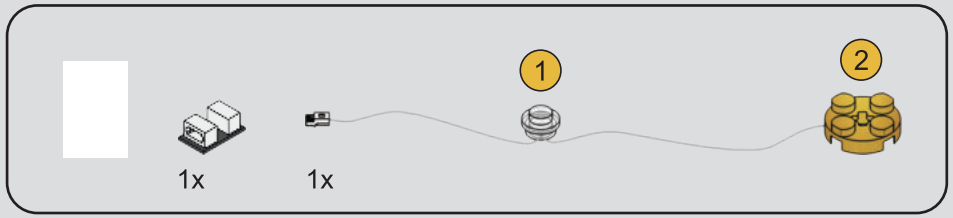

233

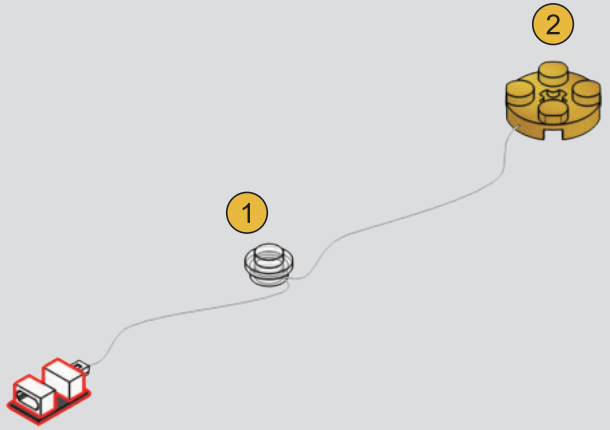

234

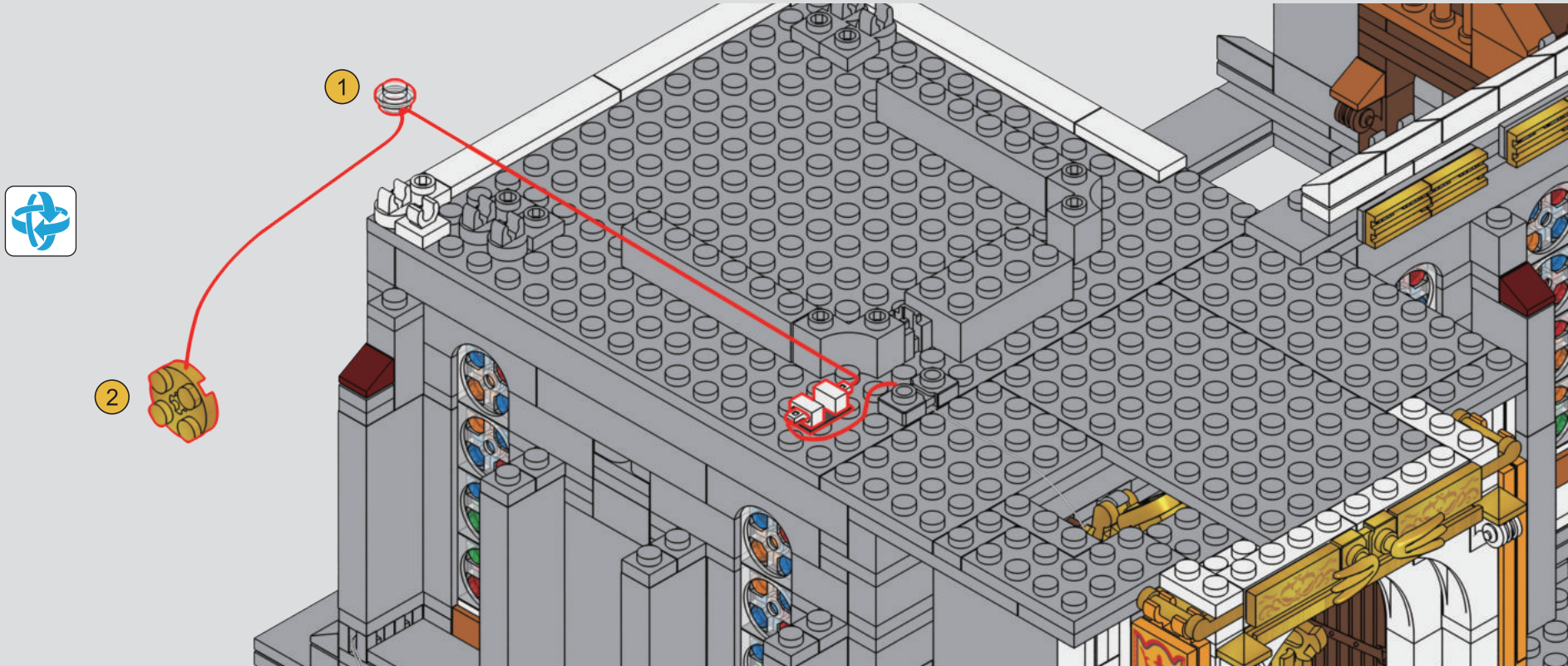

1x

235

1

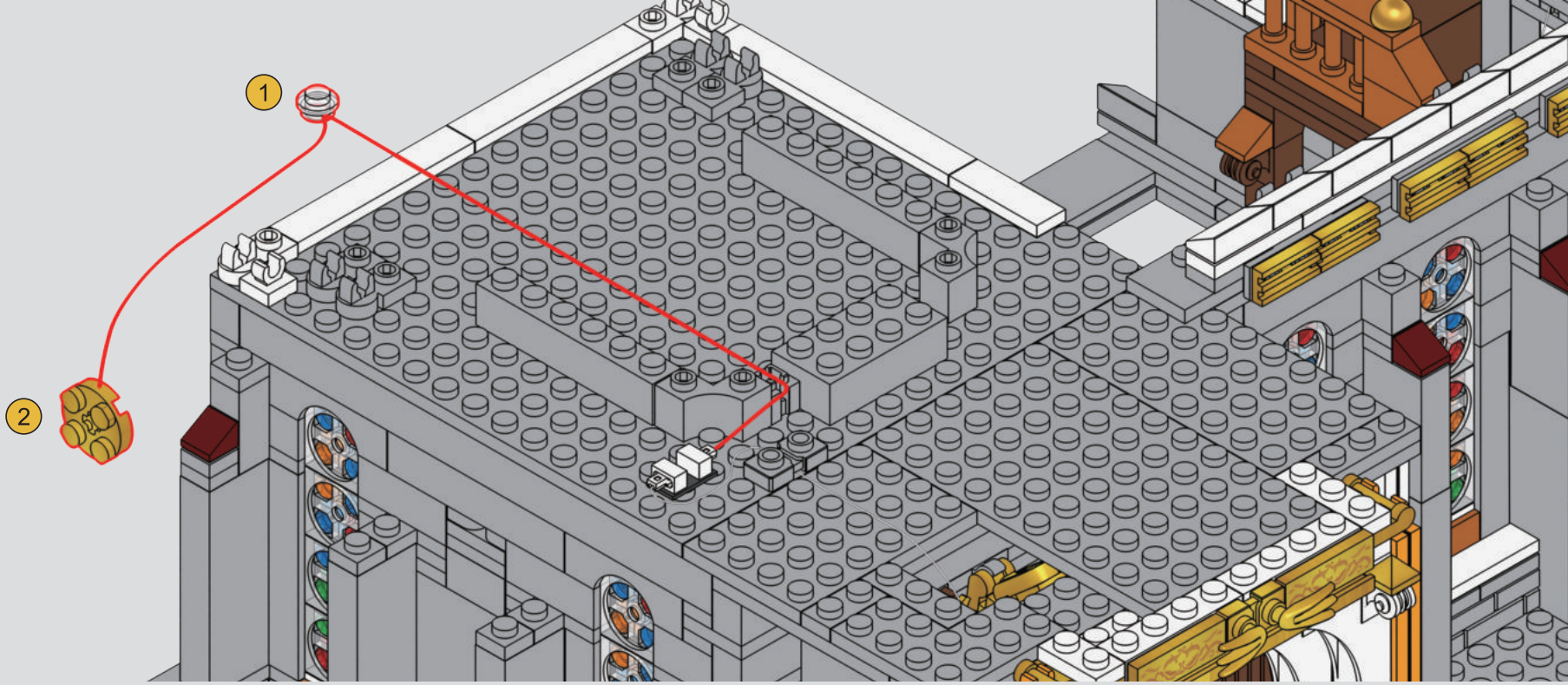

2

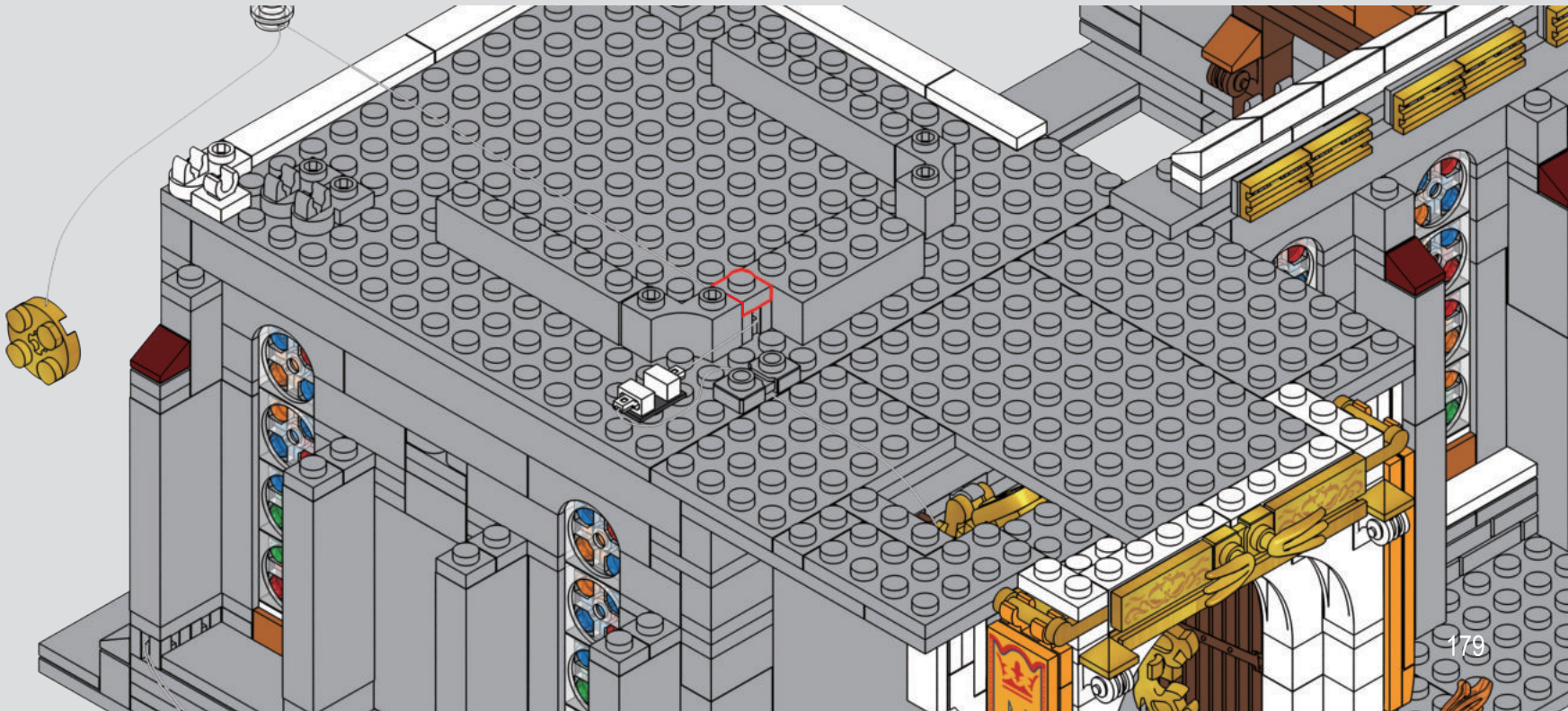

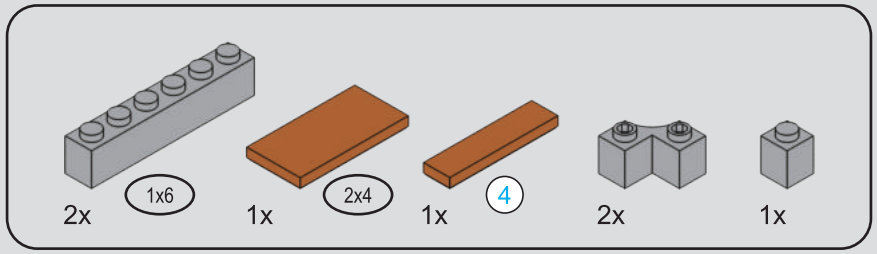



236

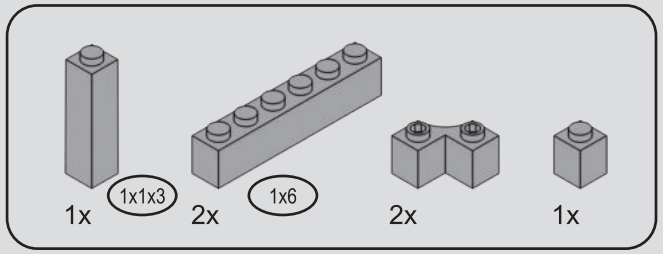

237

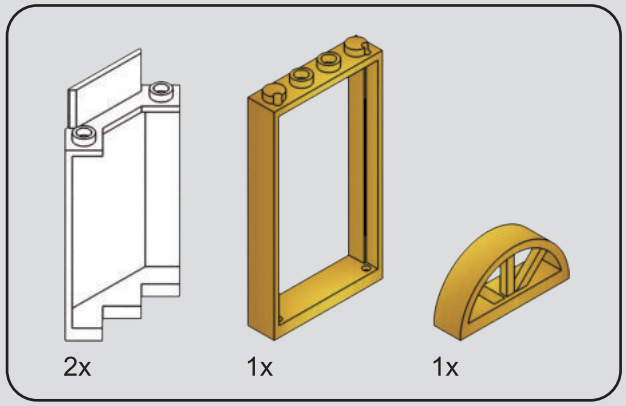

238

239

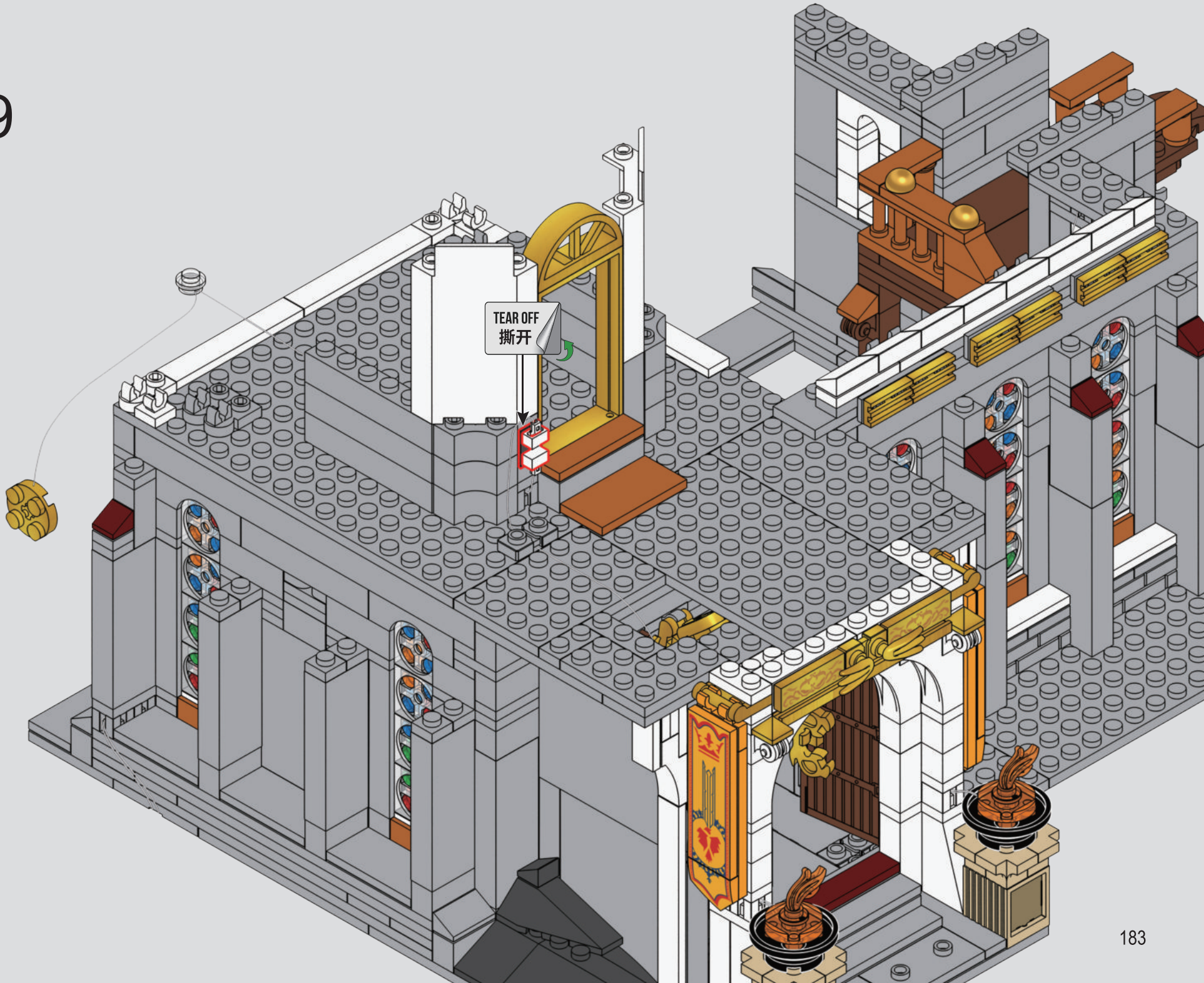

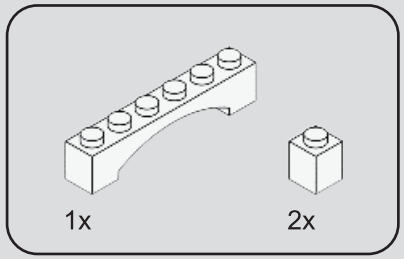

240

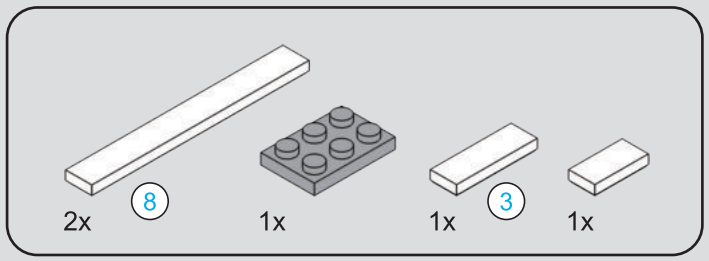

8 1:1

241

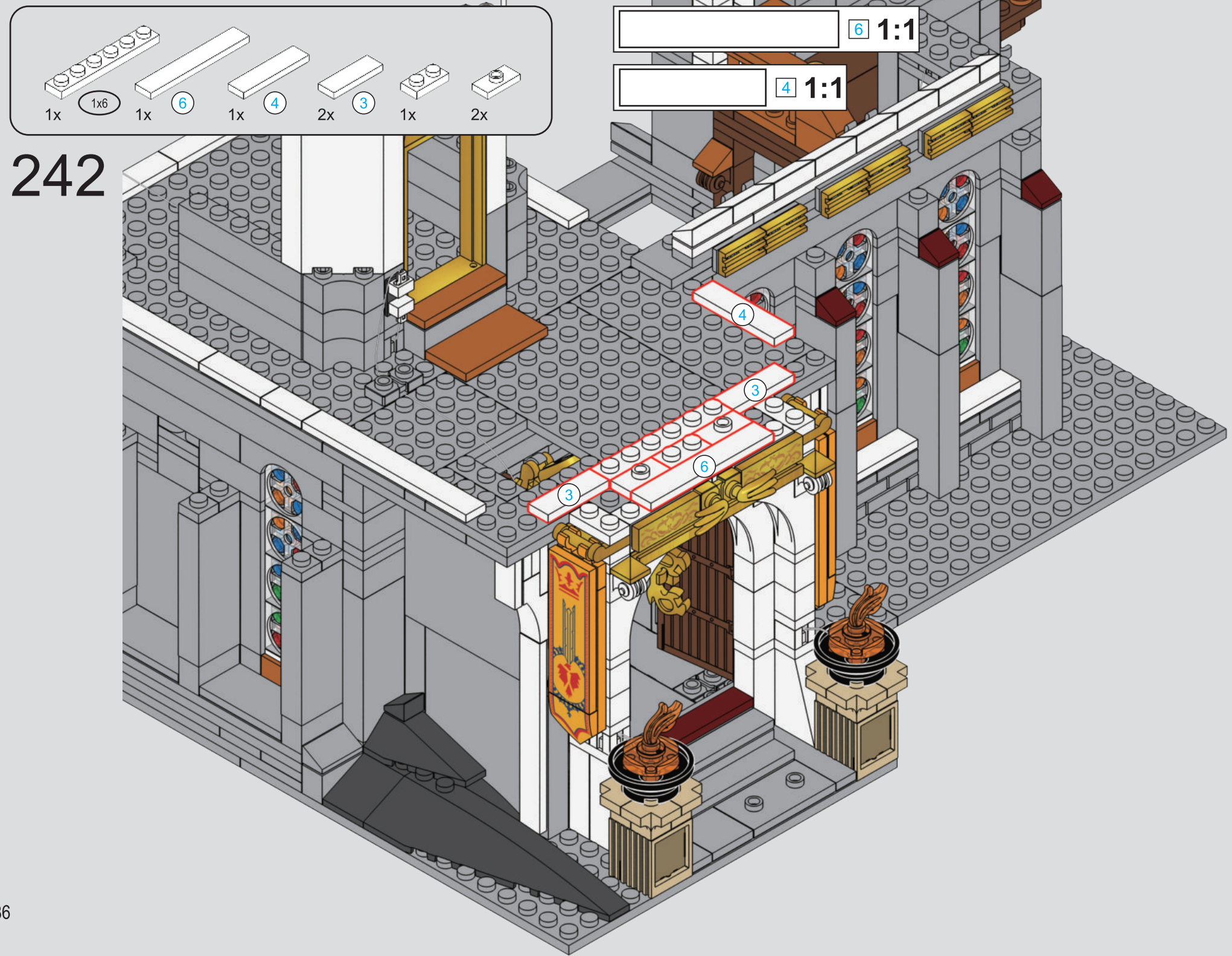
1x
1x6
1x
6
1x
4
2x
3
1x
2x
6 1:1
4 1:1
242
4
3
6
3

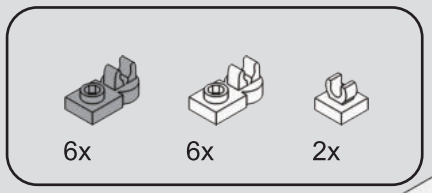

243

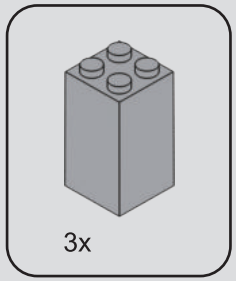

244

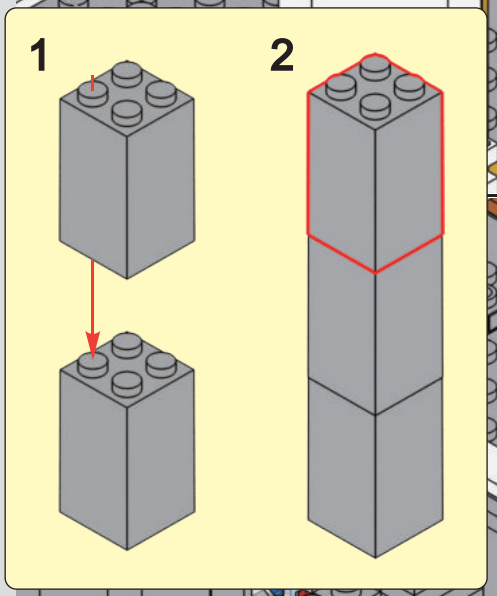

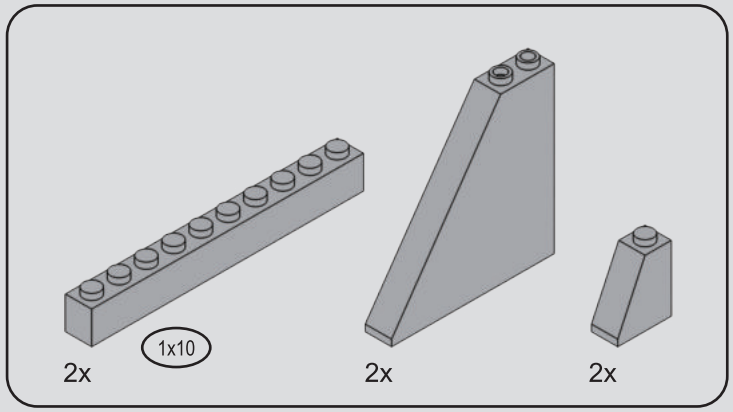

245

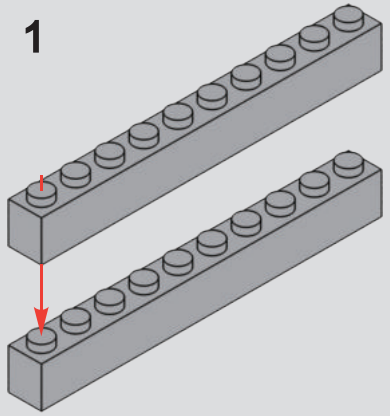

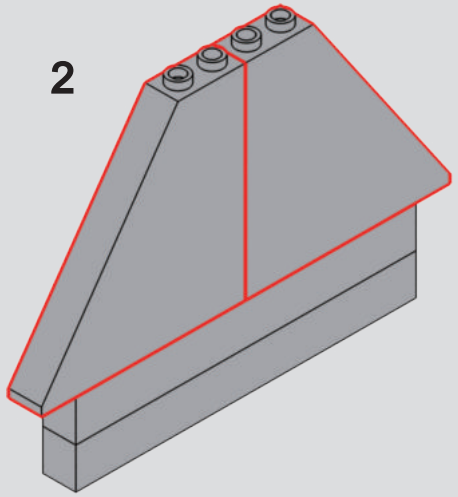

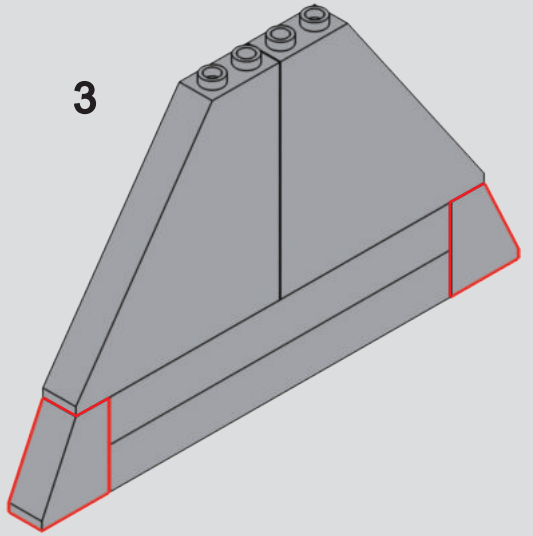

246

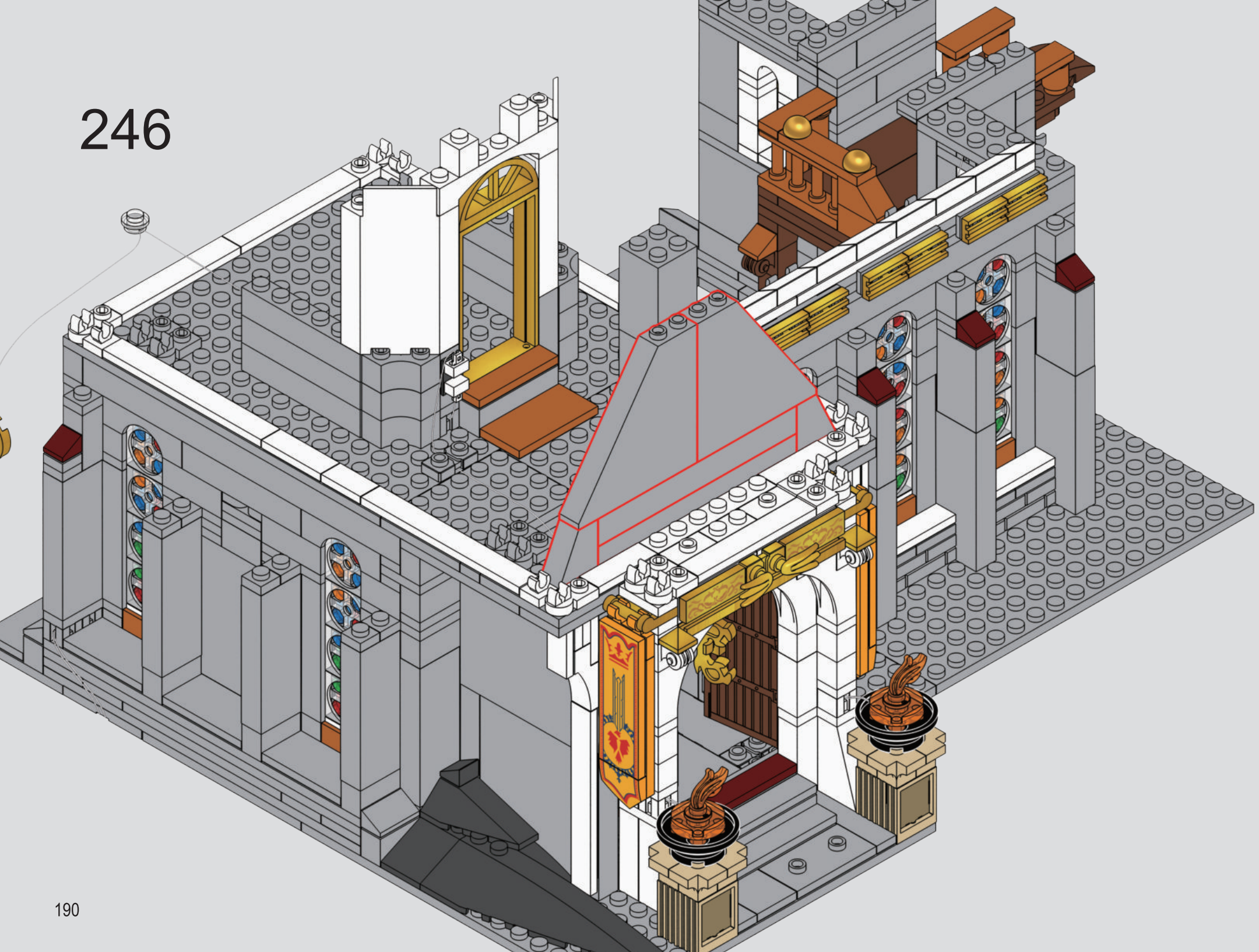

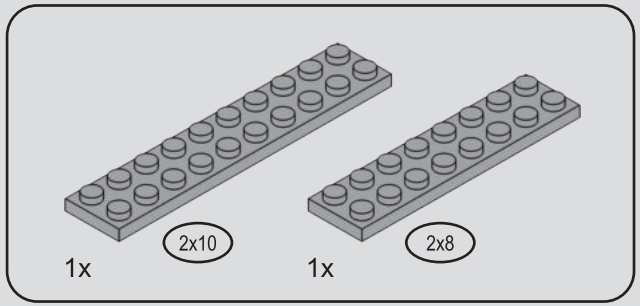

247

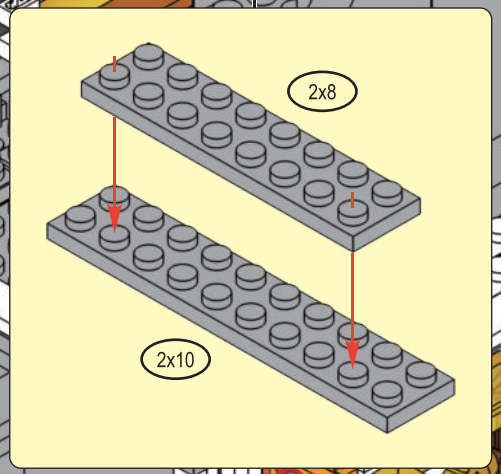

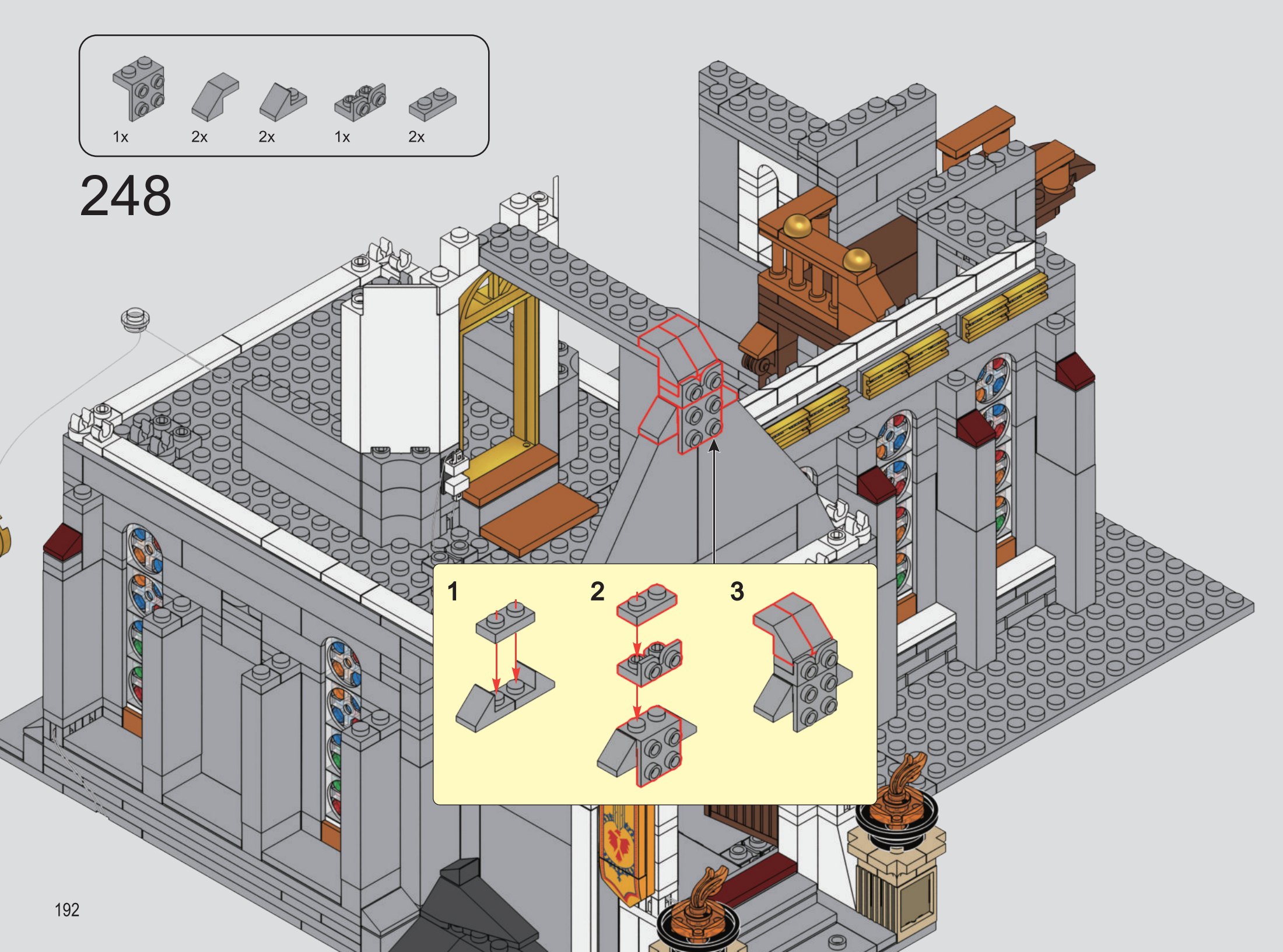
1x
2x
2x
1x
2x
248
1
2
3

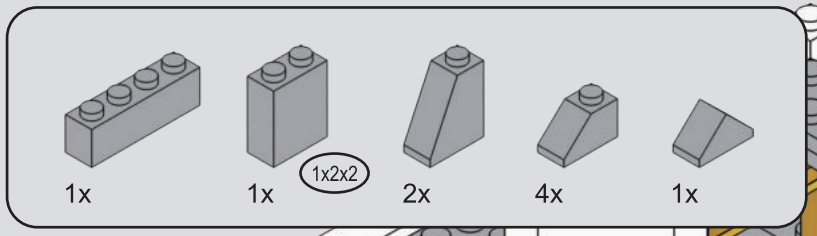

249

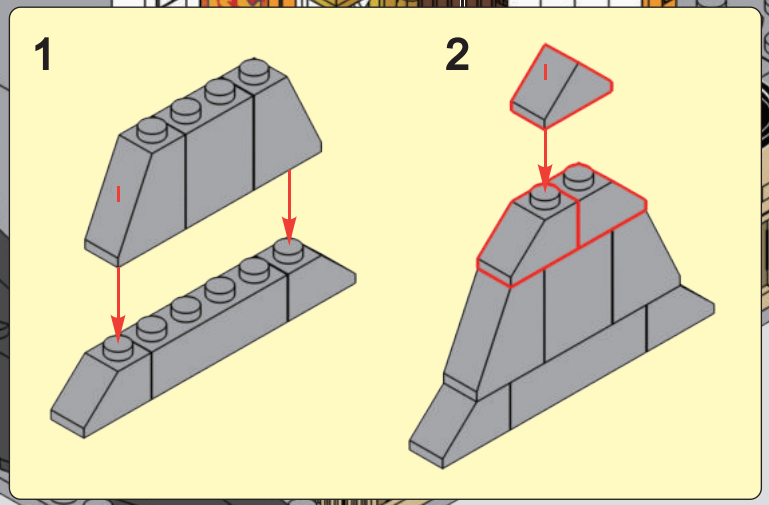


2x
2x
2x
2x
250
1
2
1
2

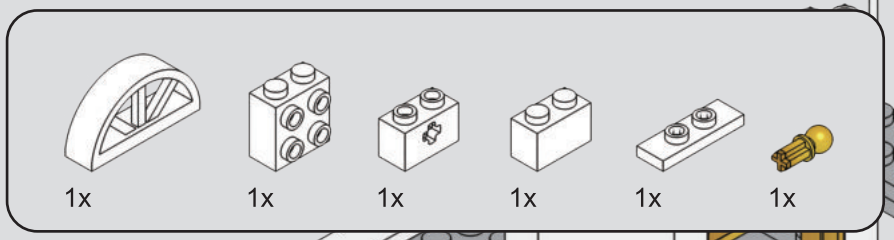

251

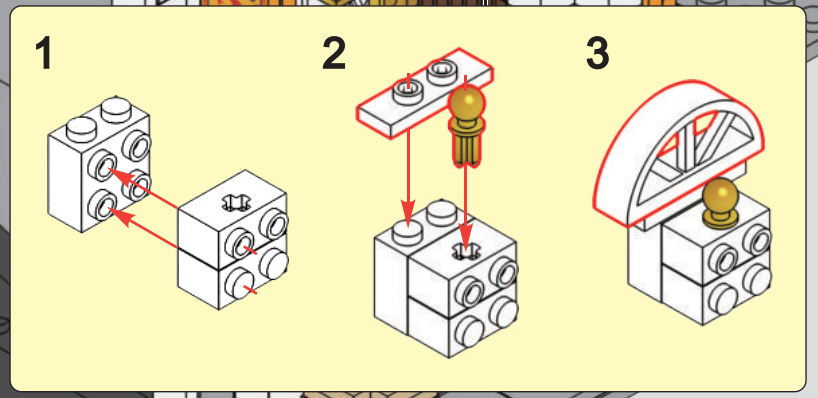



252

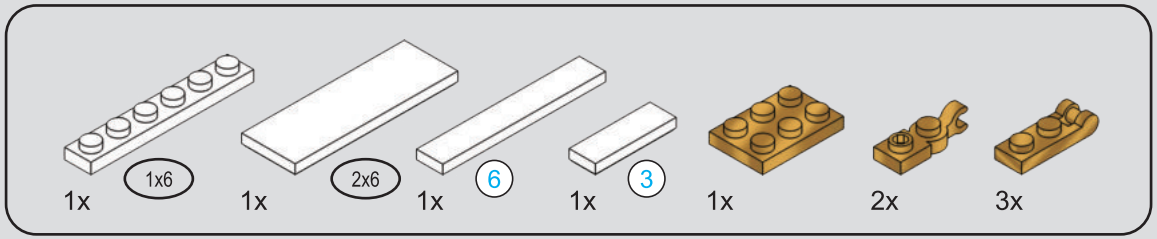
1x
1x6
1x
2x6
1x
6
1x
3
1x
2x
3x


6
1:1

253

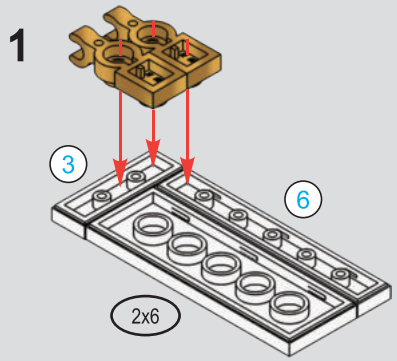
1
3
6
2x6

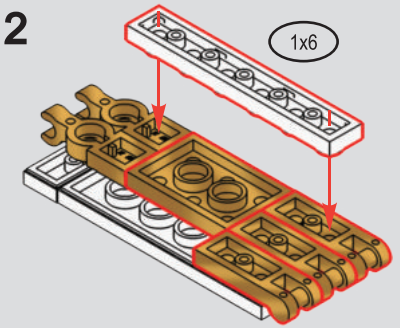
2
1x6

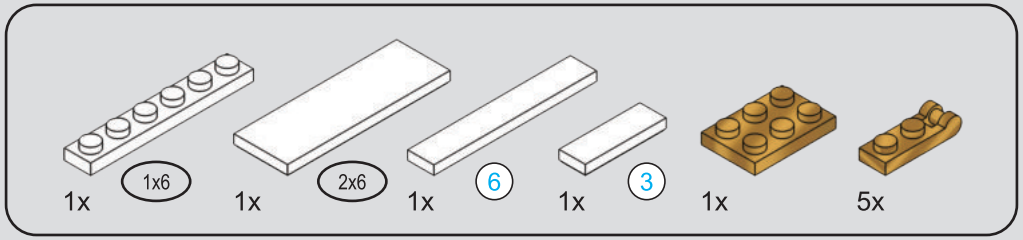
1x
1x6
1x
2x6
1x
6
1x
3
1x
5x

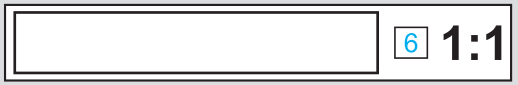
6
1:1

254

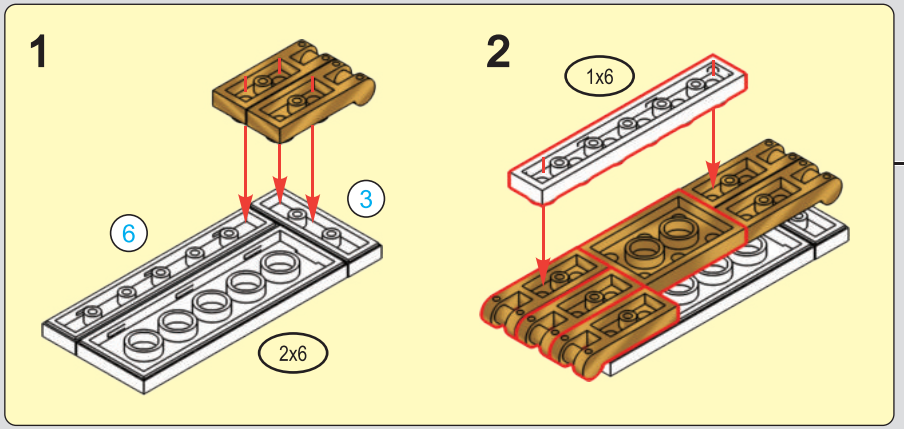
1
6
3
2x6
2
1x6

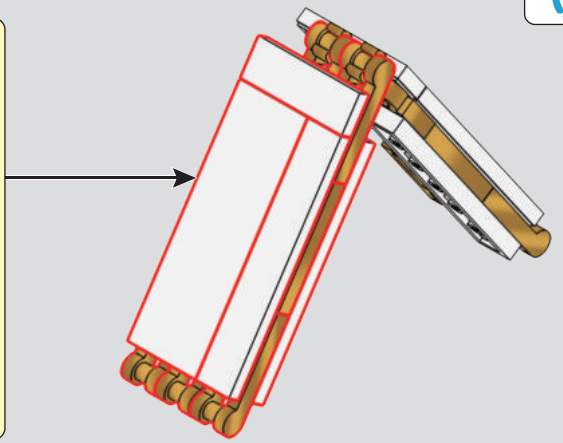

255

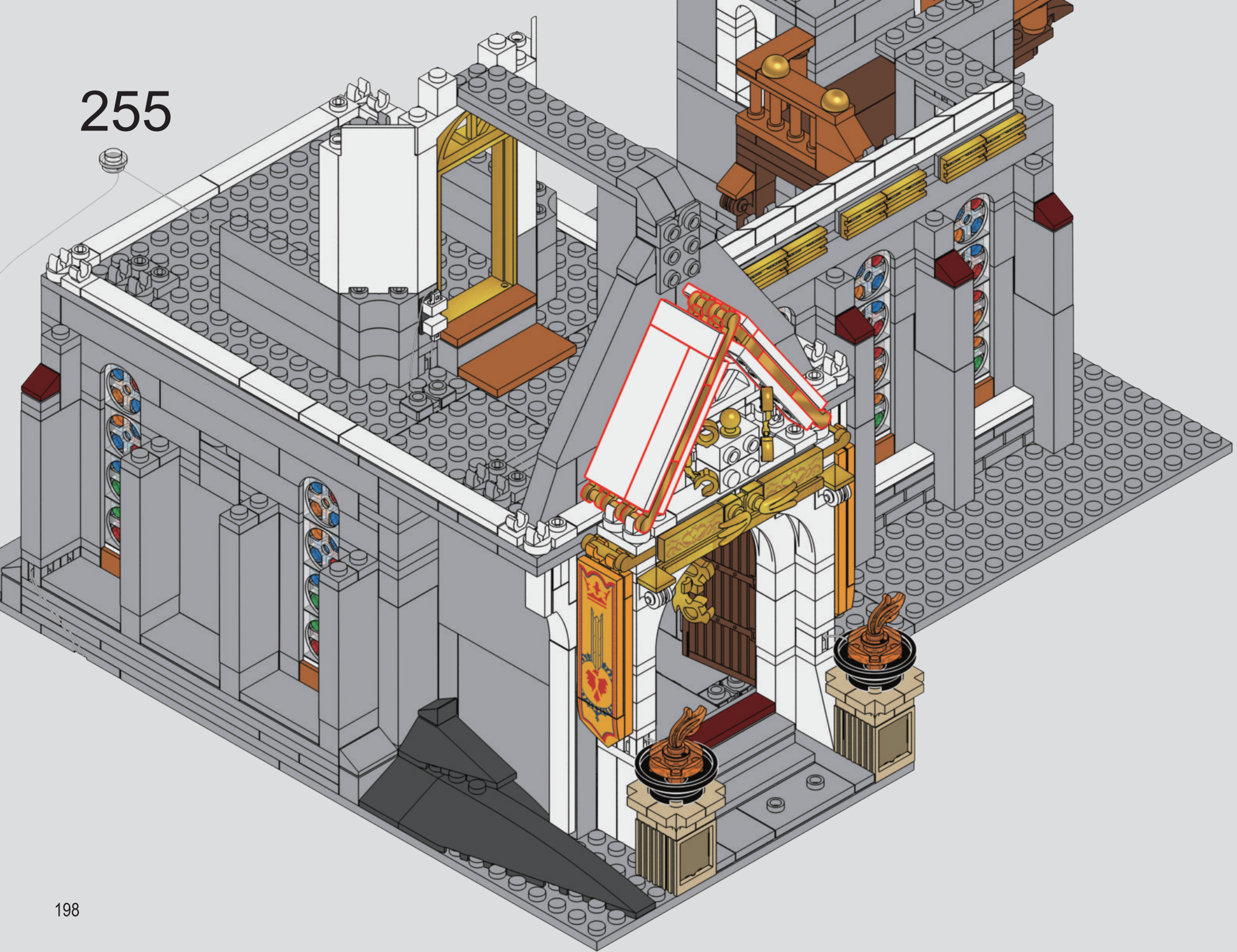

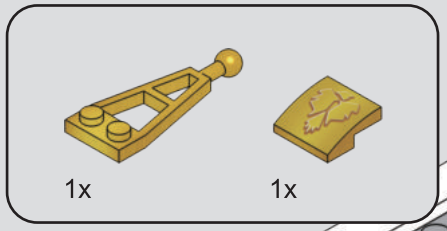

256

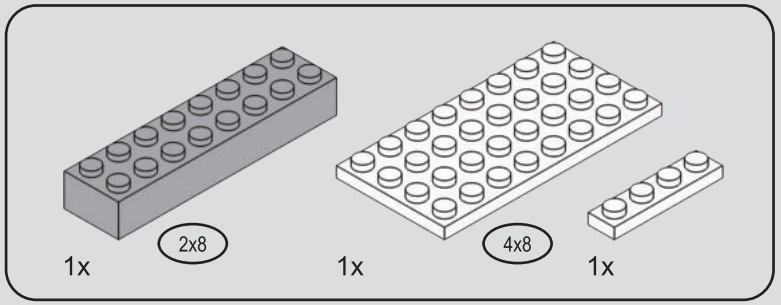

257

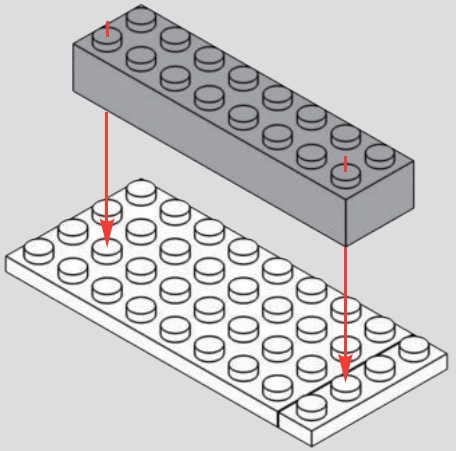

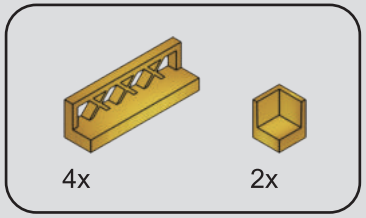

258

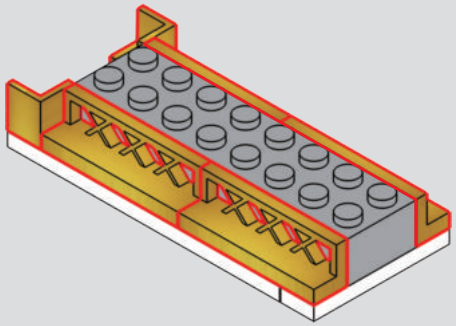

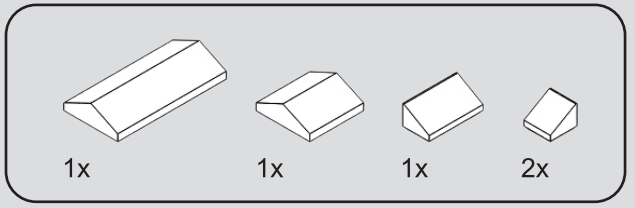

259

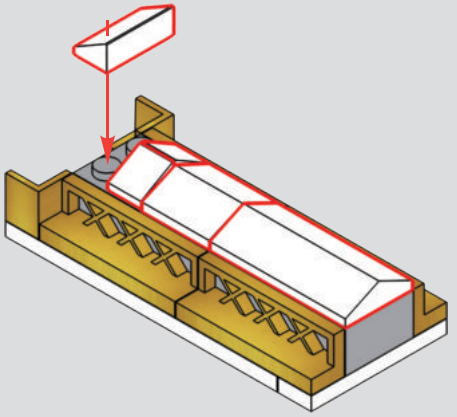

260

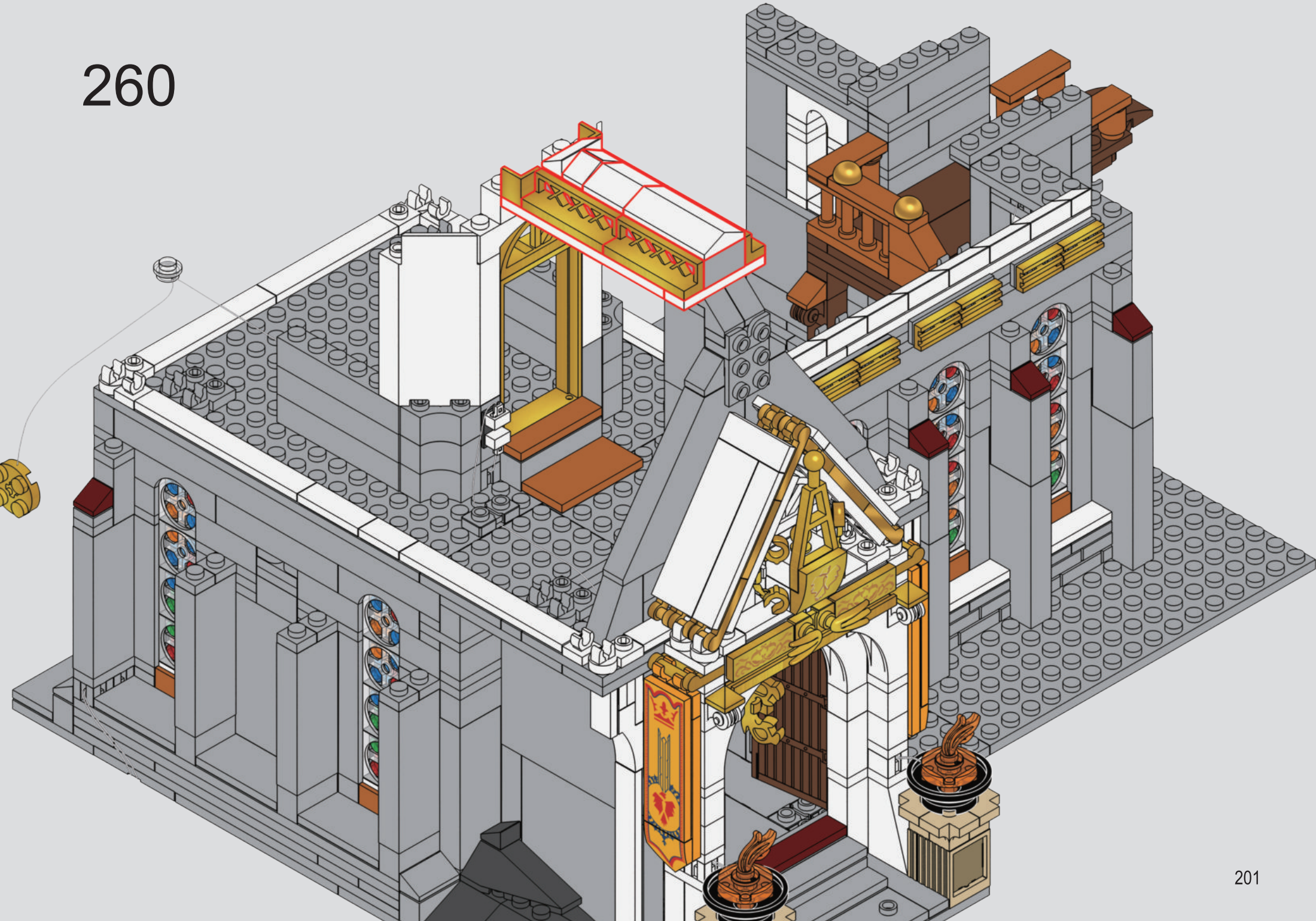

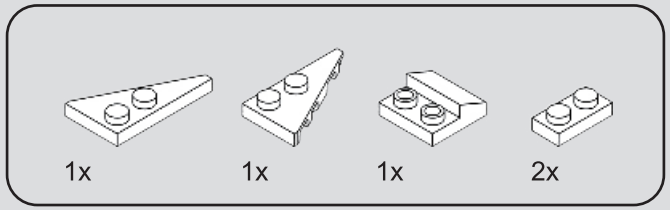

261

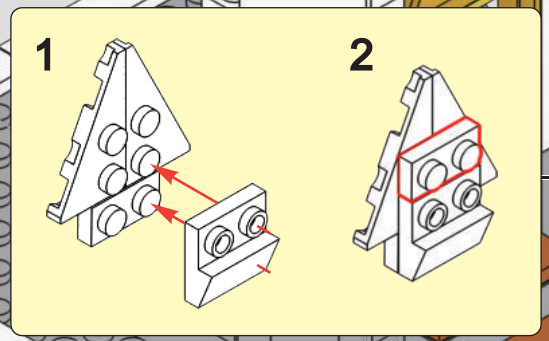

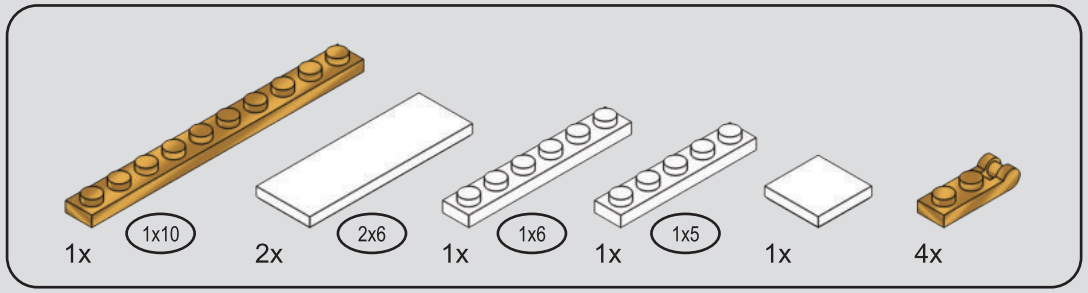

262

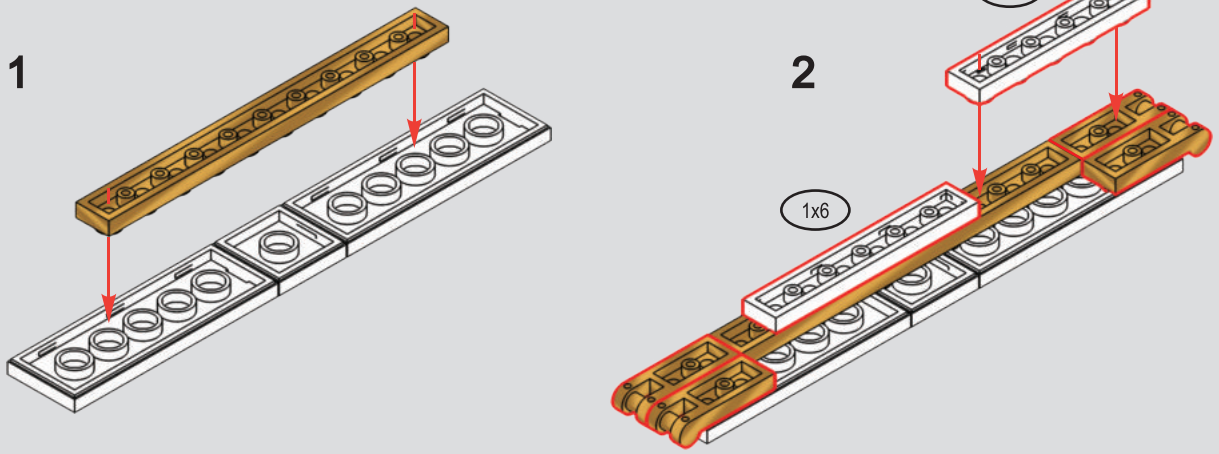

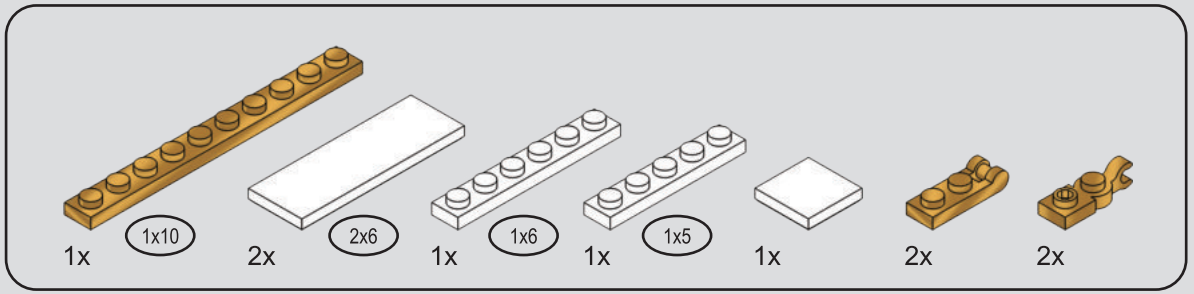

263

1

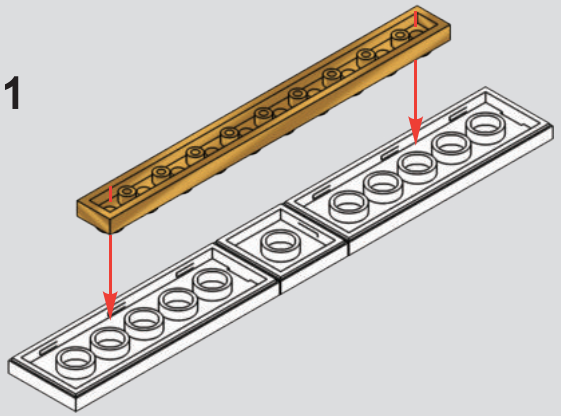

2

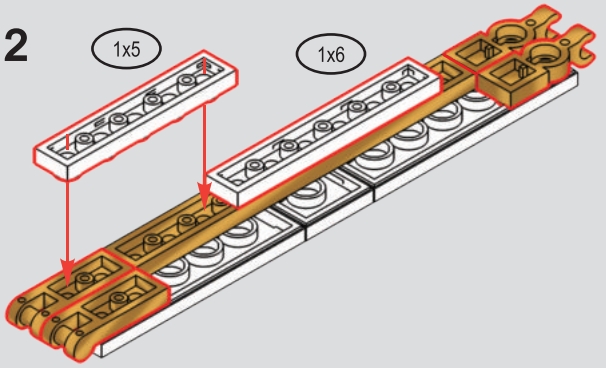

264

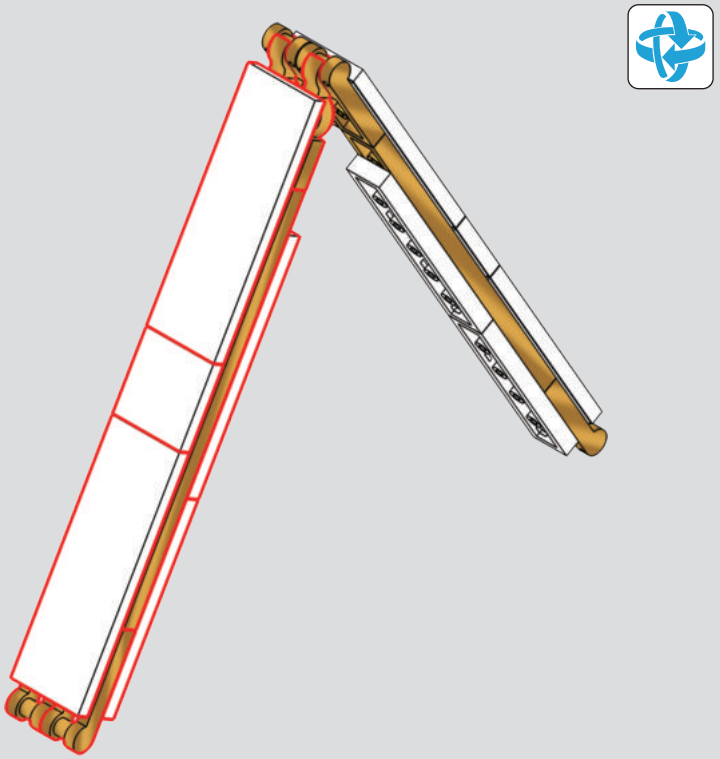

265

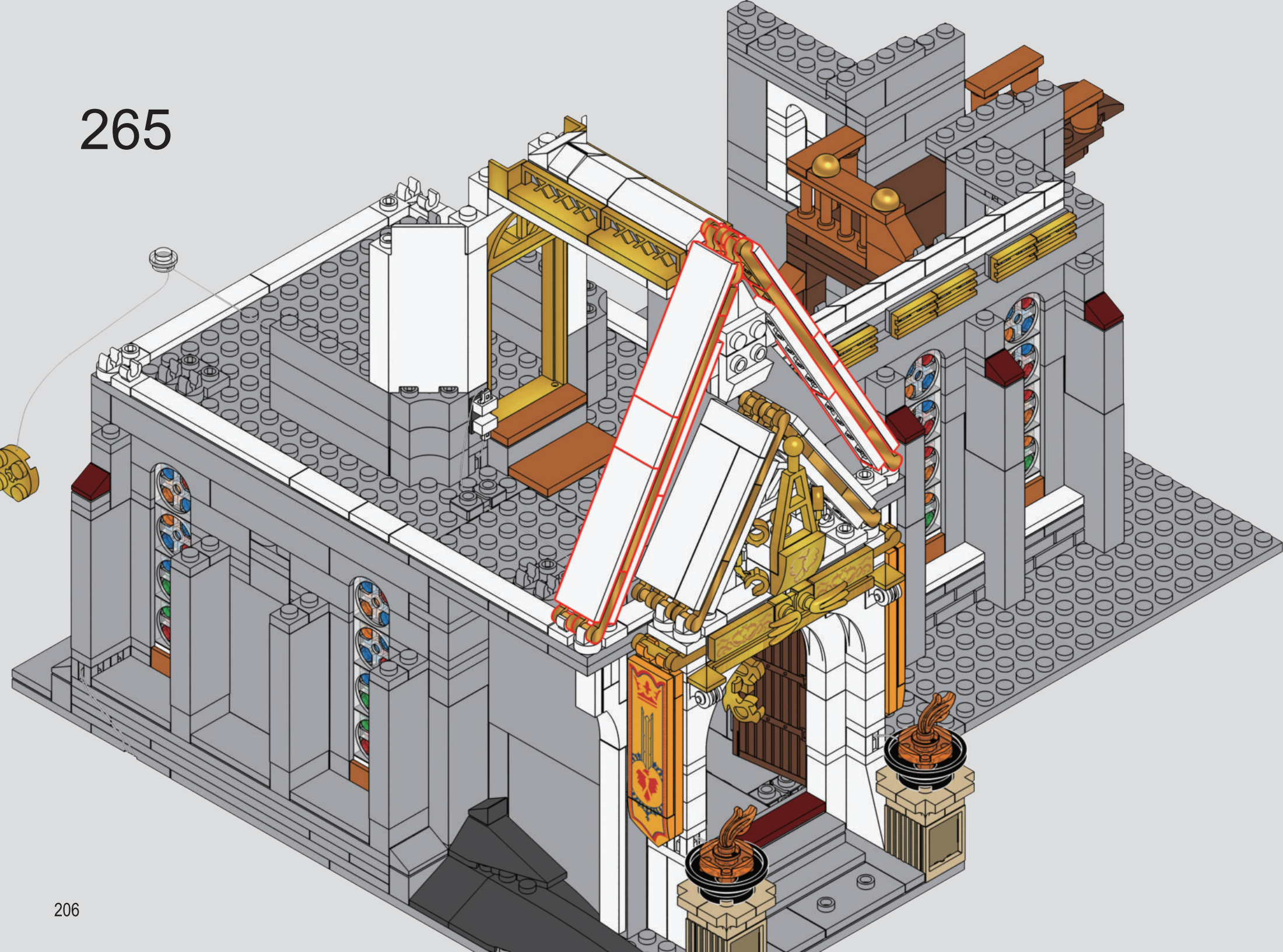

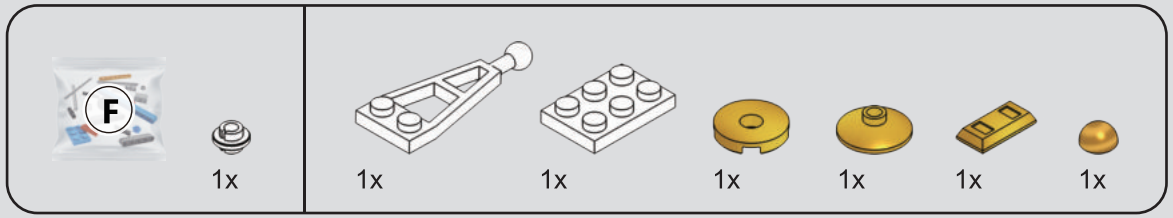

266

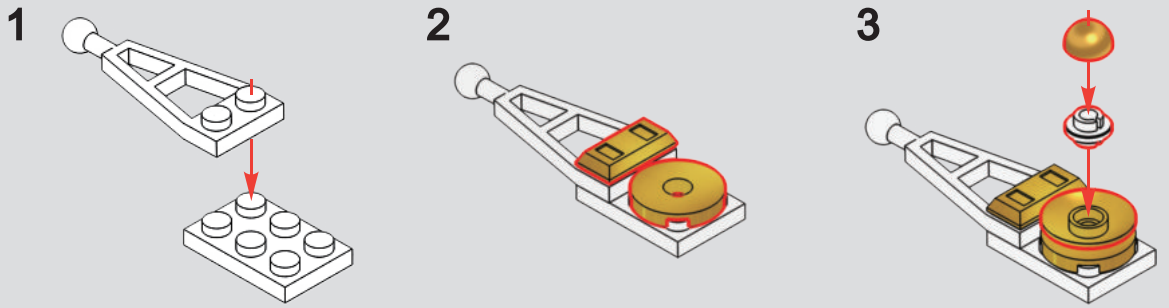

267

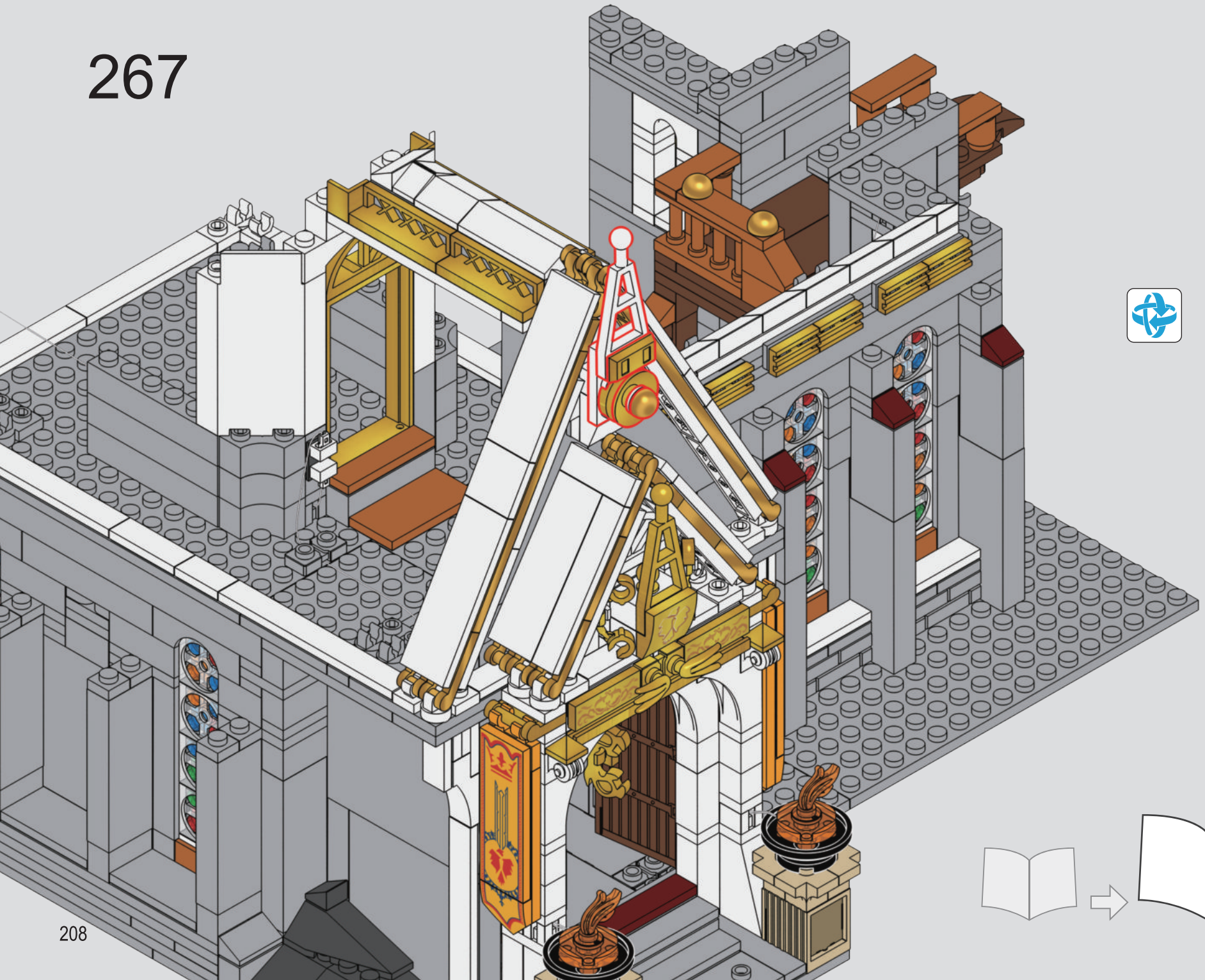

Lumibricks and Lumibricks logo are trademarks of the Lumibricks group.

WWW.LUMIBRICKS.COM

如果您遇到任何问题，请通过以下方式与我们联系：

天猫 小红书

lumibricks灯搭官方旗舰店

会员中心