LUMIBRICKS™

Scan the QR code
for a PDF instruction

扫码关注公众号
获取电子版说明书

2

18009
2186PCS
16+

Saltwind Coast
Road Trip!

# ABOUT LUMIBRICKS

Welcome to Lumibricks, where imagination meets illumination in the brick world!

Formerly known as FUNWHOLE, the world's first lighting bricks manufacturer, Lumibricks continues its legacy as a trailblazer in the world of building brick sets with a unique twist - integrated lighting that transforms every creation into a radiant masterpiece.

Every Lumibricks' set celebrates the joy of building and the magic of illumination. Whether you're crafting intricate architectures or imaginative scenes, the design details and lighting features bring the sets to life, and also bring you joy and shine whether it is the day or night.

At Lumibricks, we believe in the power of light to transform and elevate. With our slogan, "Delight day and night," we invite you to explore the possibilities of illuminated brick sets. Discover a hobby that doesn't just shine - it glows with your inner creativity.

# 欢迎来到Lumibricks灯搭的乐园

在这里，我们不仅仅是玩具制造商，我们还是创造快乐的艺术家。

自2014年诞生起，Lumibricks灯搭（原FUNWHOLE）就坚守一个独特的愿景：在日与夜的交替中，为我们的玩家揭示积木之美的无限可能。

作为全球领先的灯光积木品牌，本着充分表现积木套装整体之美的初衷，Lumibricks致力于灯光积木套装产品的开发，将积木与灯光合为一体。

Lumibricks不仅仅是一套普通的积木，更是代表了一种全新的玩乐方式，每一块积木，每一束光线，都承载着我们带给全球数百万家庭更多欢笑的承诺。

我们相信，积木有灯，生活有光，让Lumibricks与你一起，拼搭出更多乐趣，创造属于你的灯光宇宙。

7
F
S
LUMIBRICKS
03

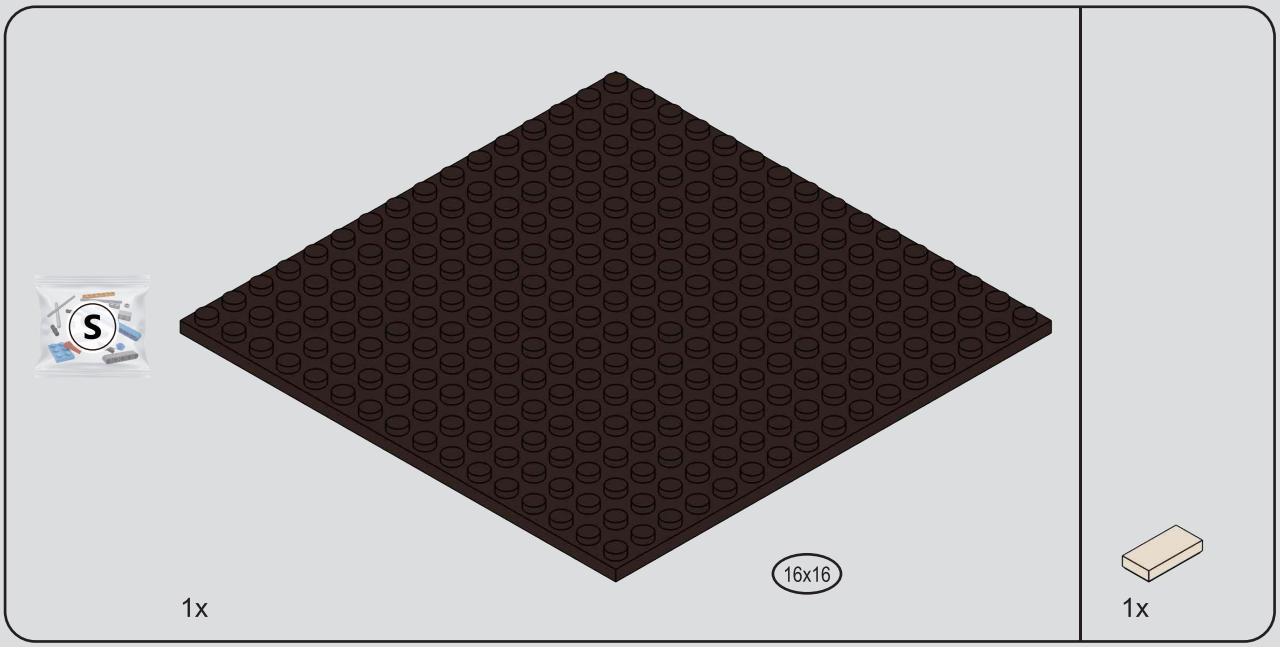


# 1

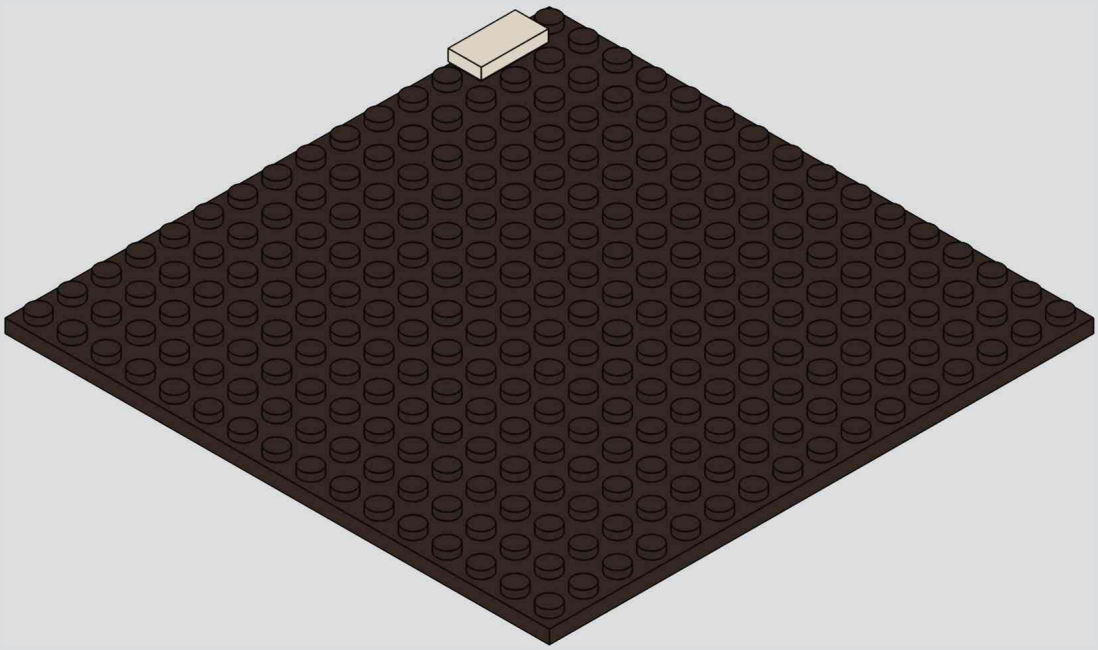

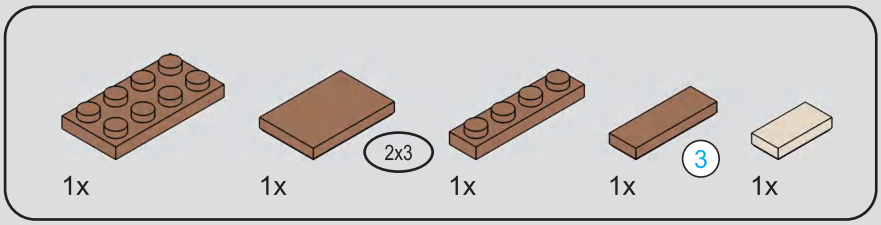


# 2

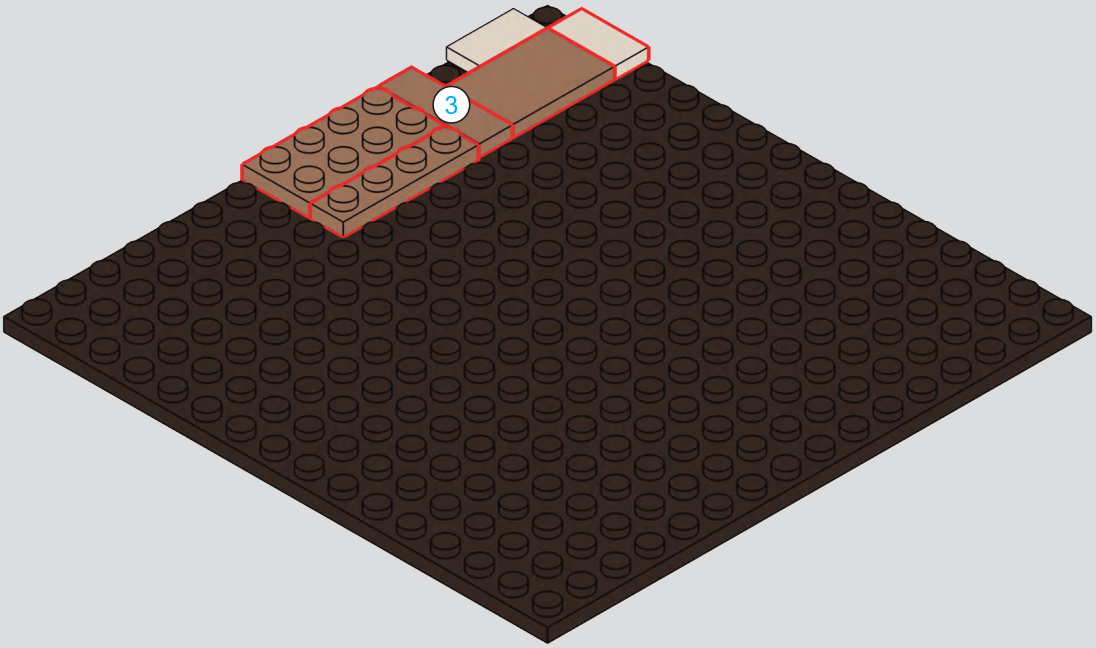


---

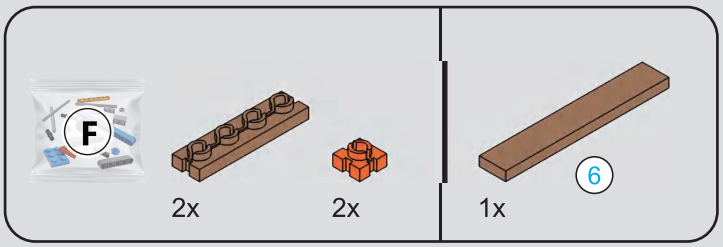

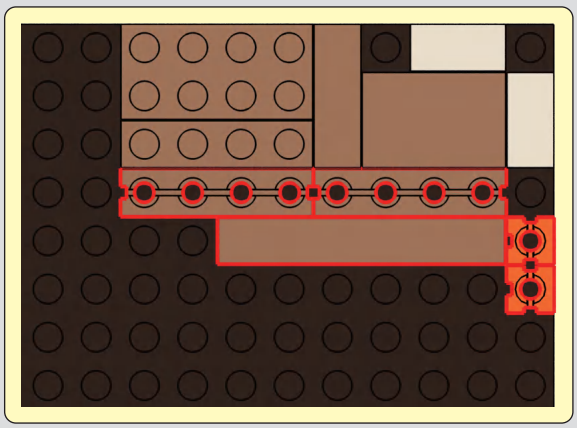

# 3

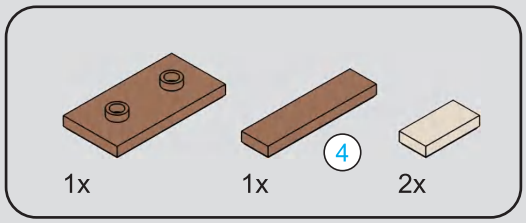

# 4

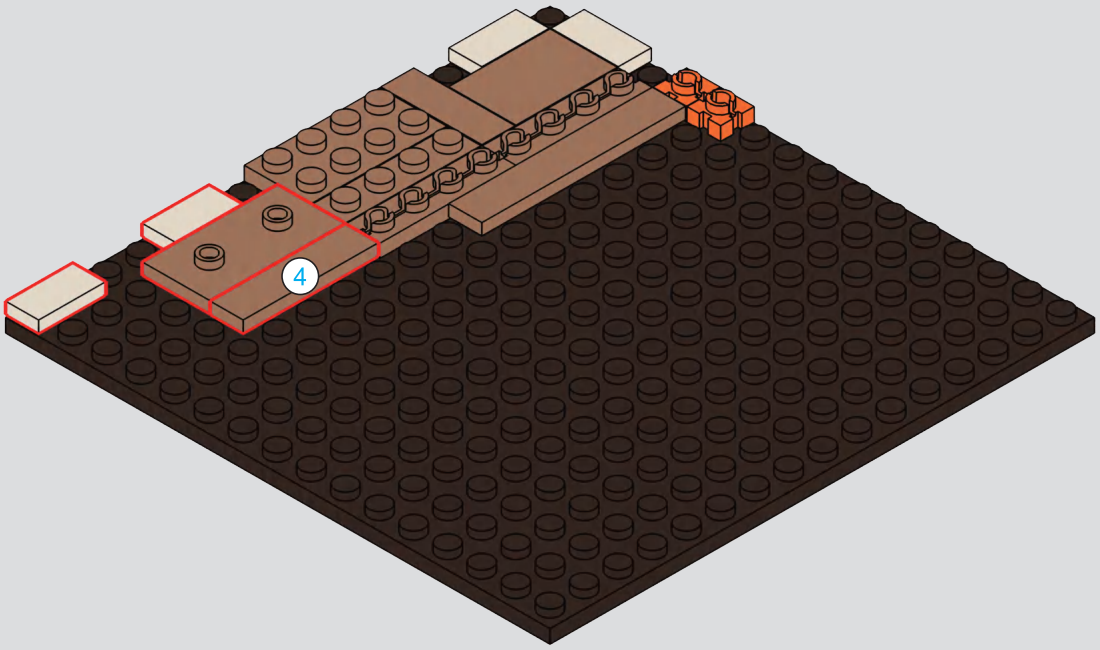


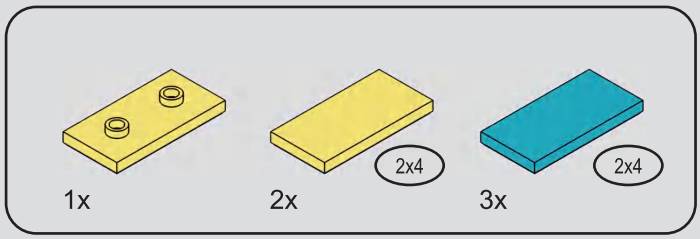


# 5

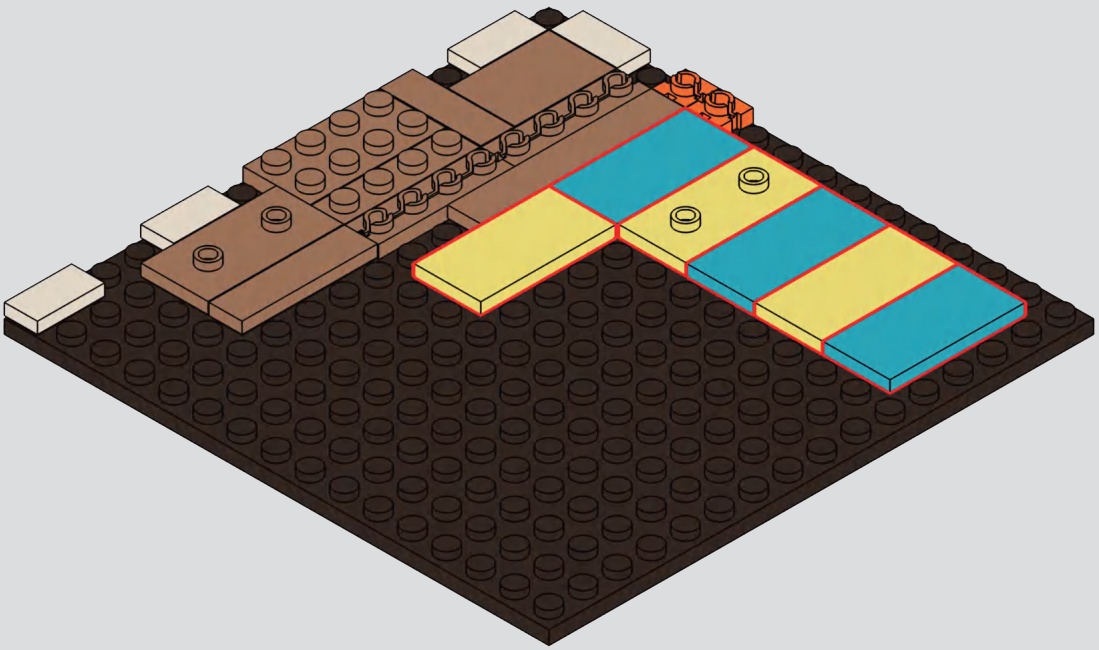

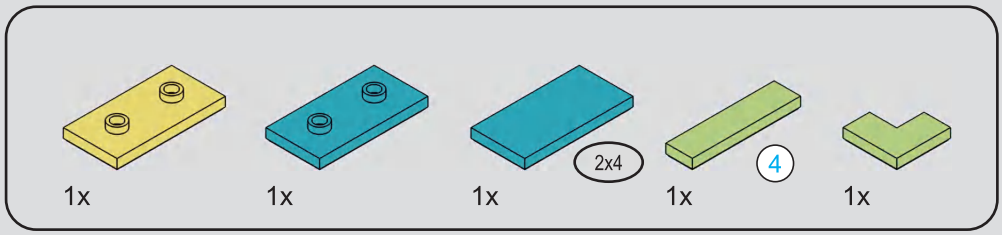


# 6

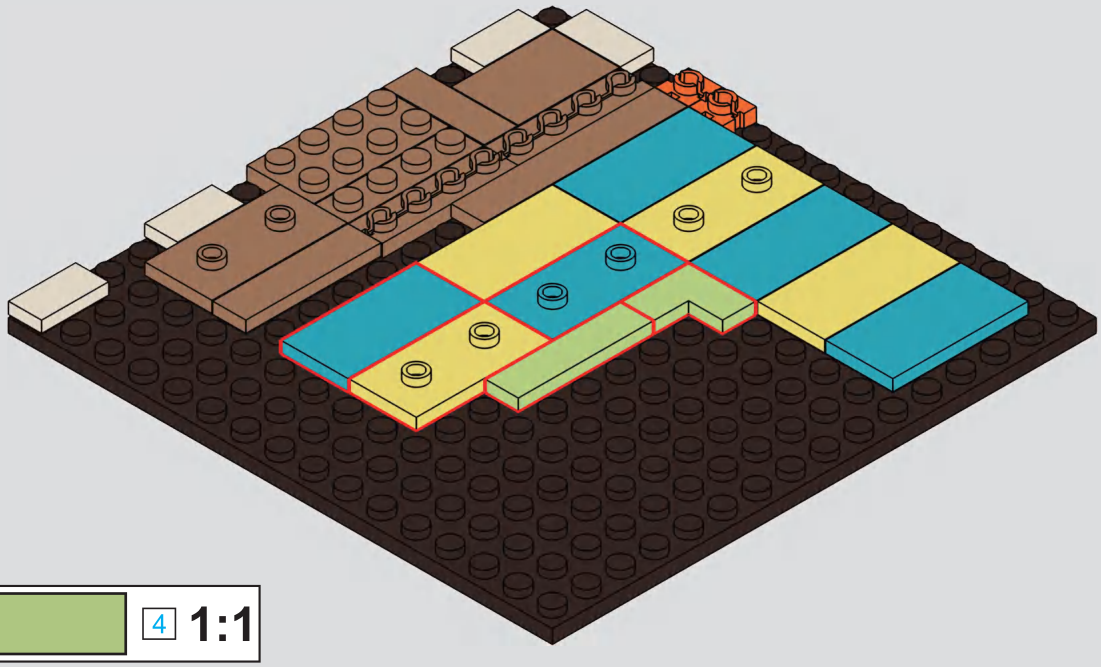

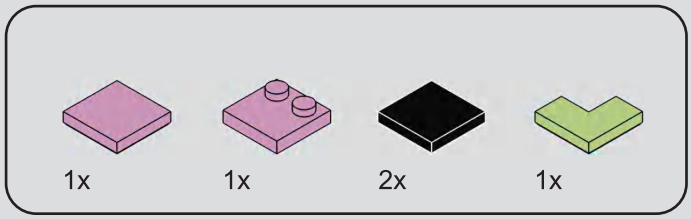


# 7

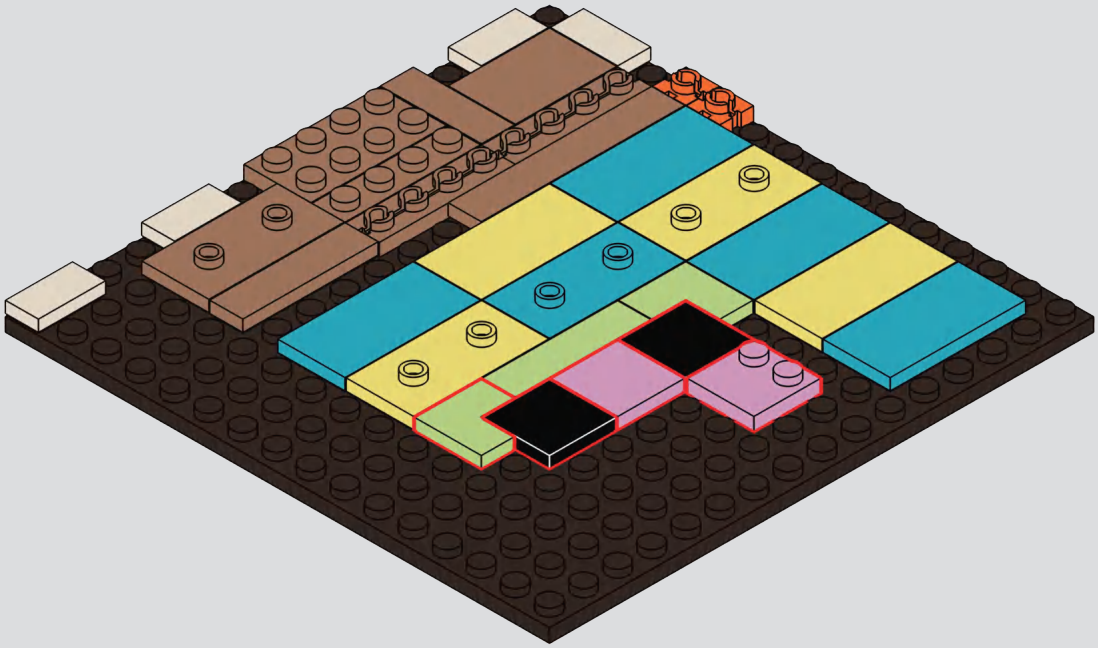

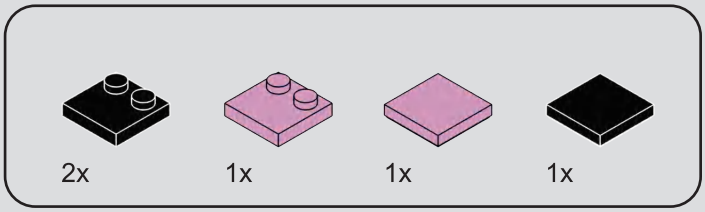


# 8

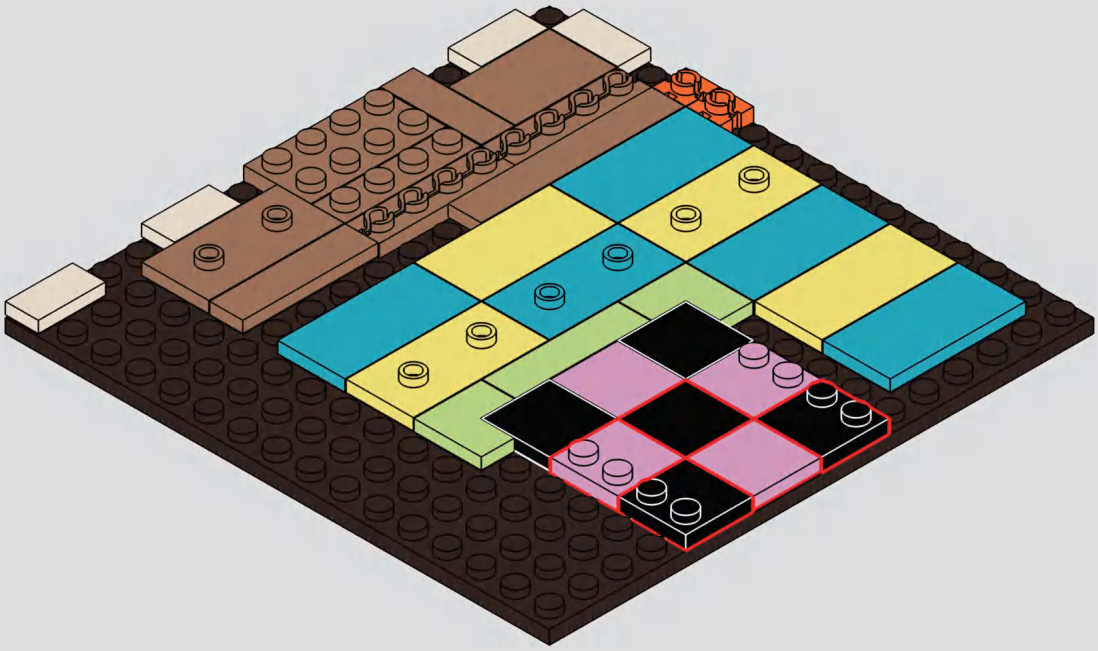

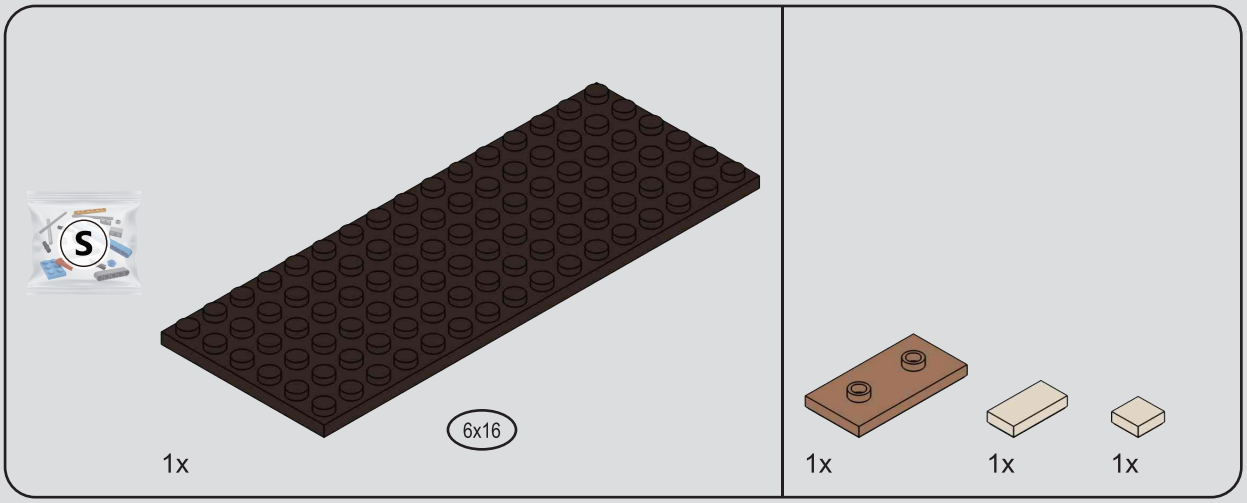


# 9

1

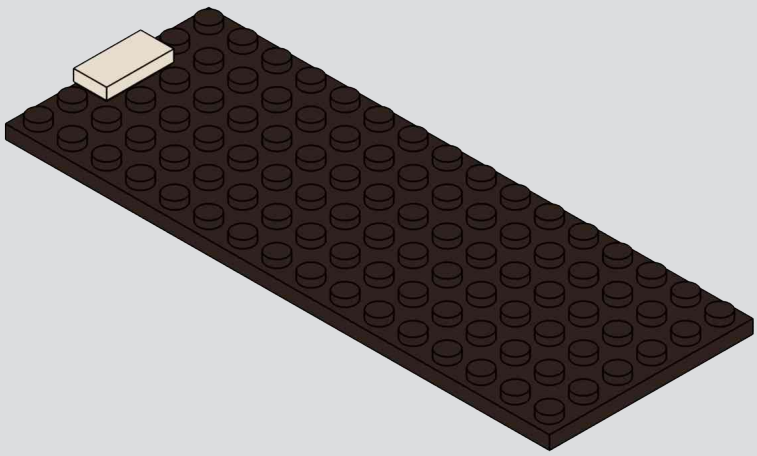

2

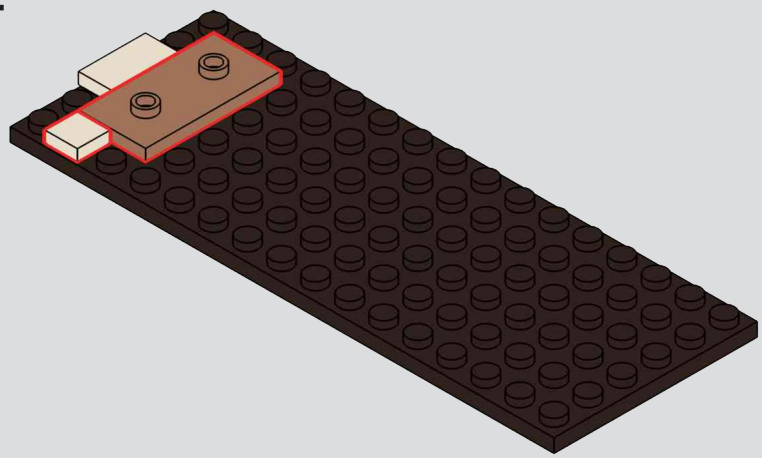

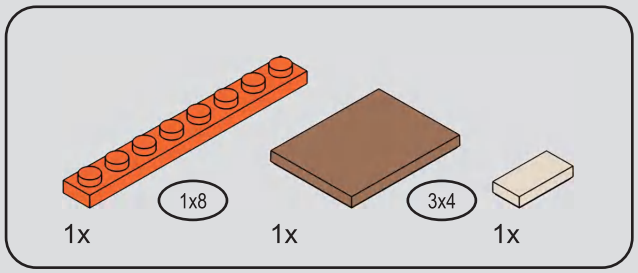


# 10

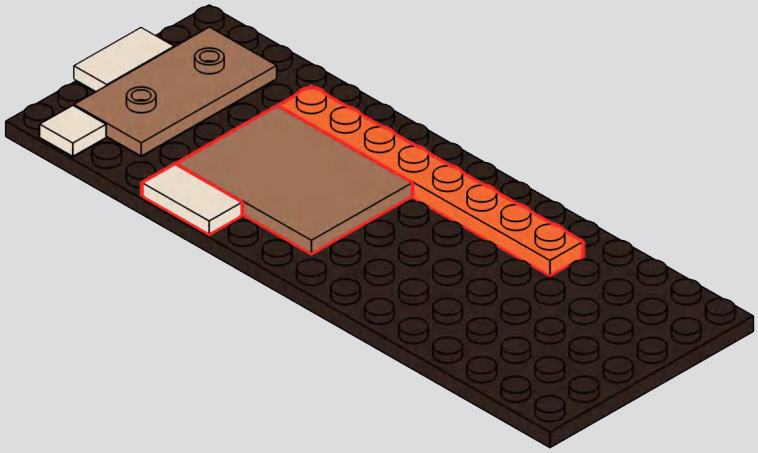

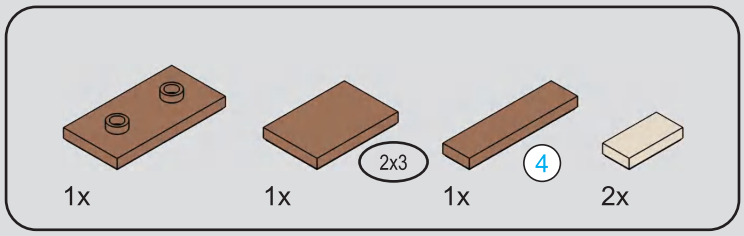

# 11

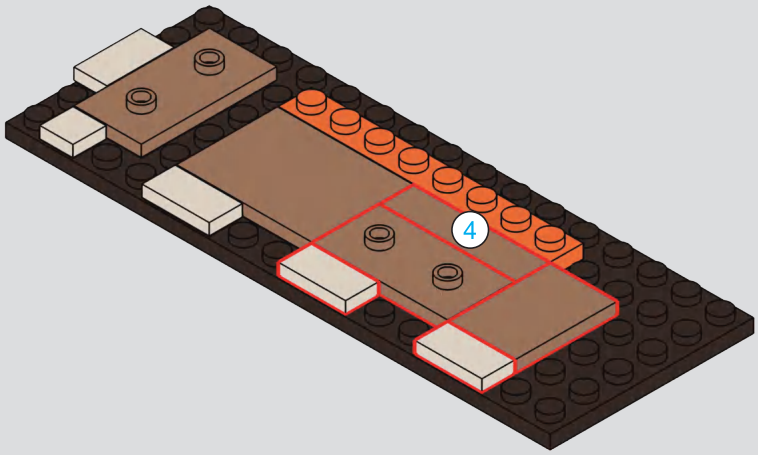

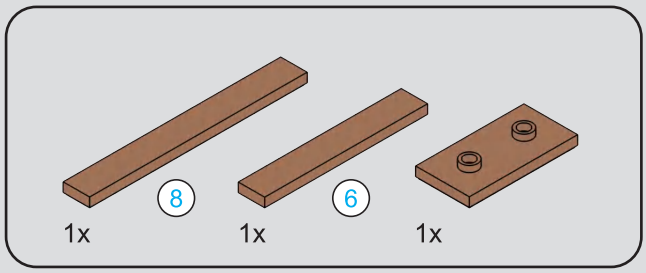


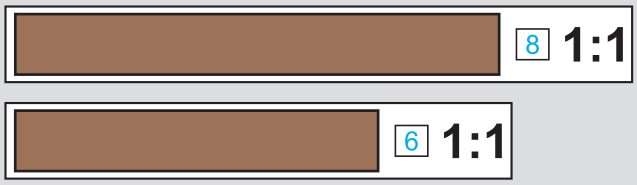


# 12

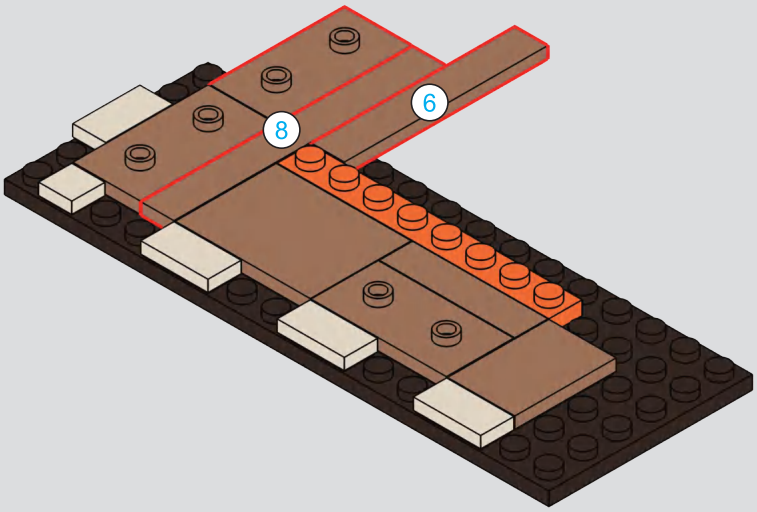


# 13

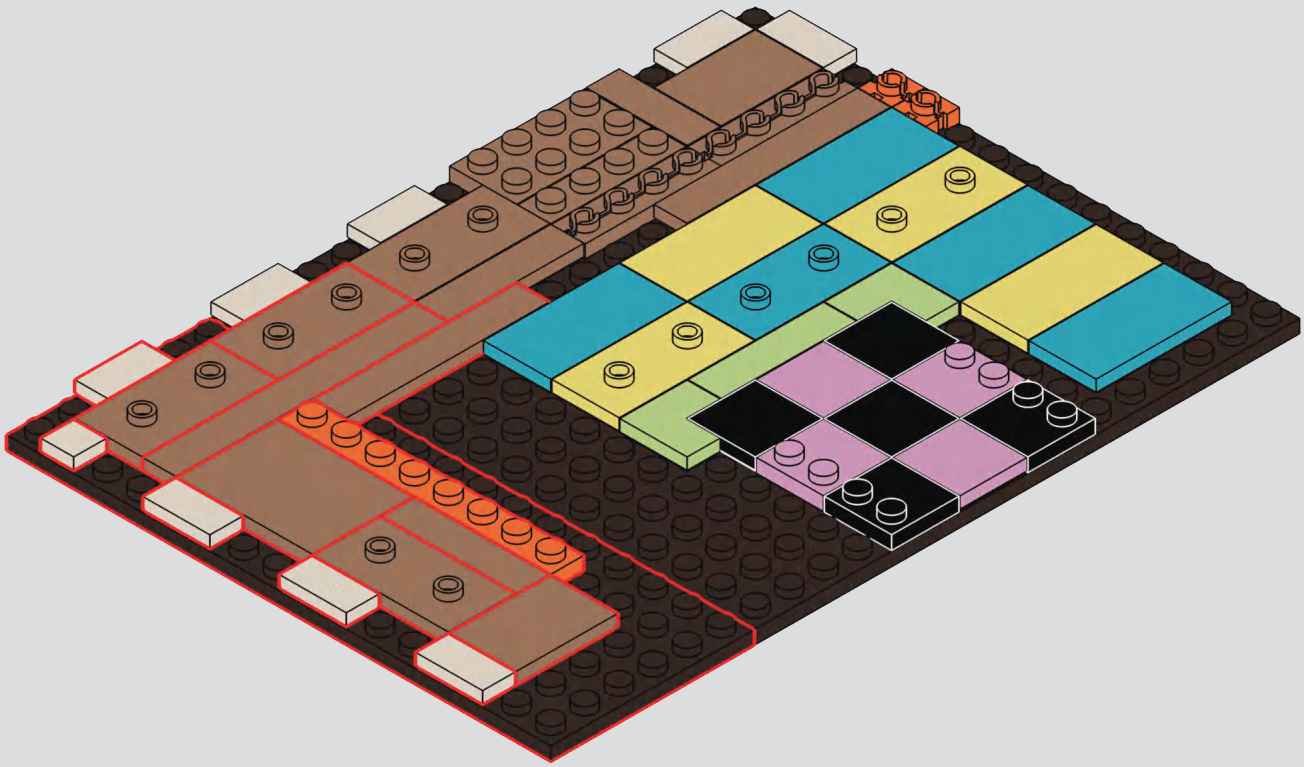

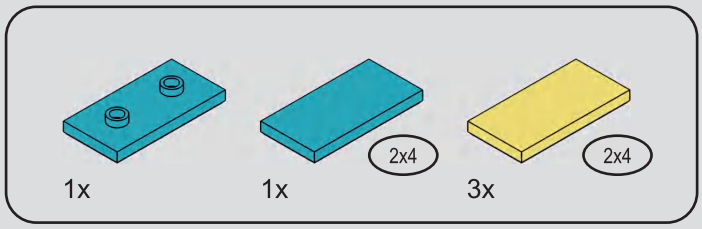


# 14

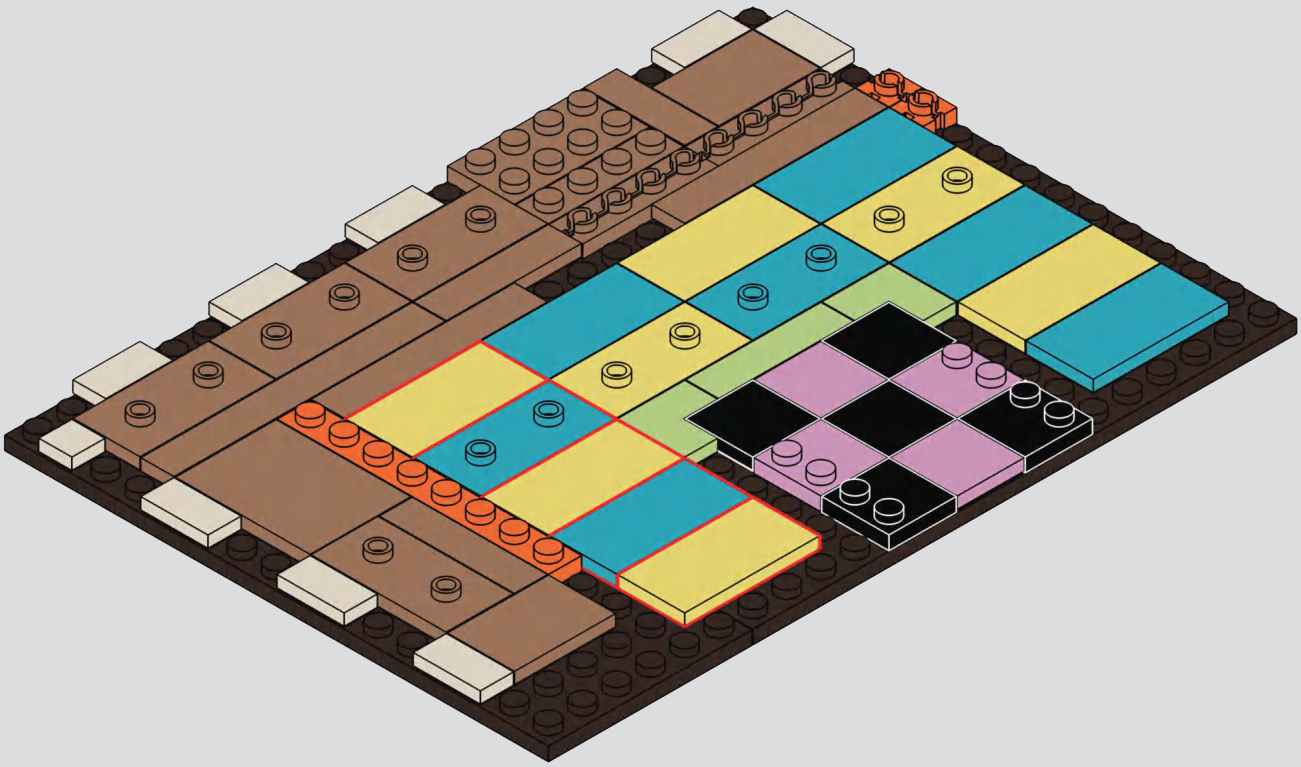

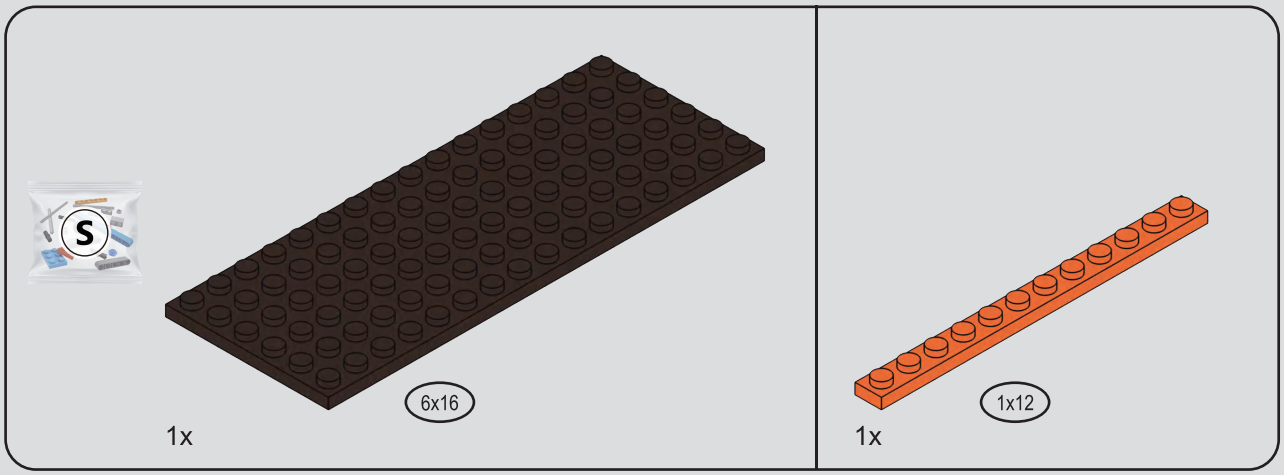


# 15

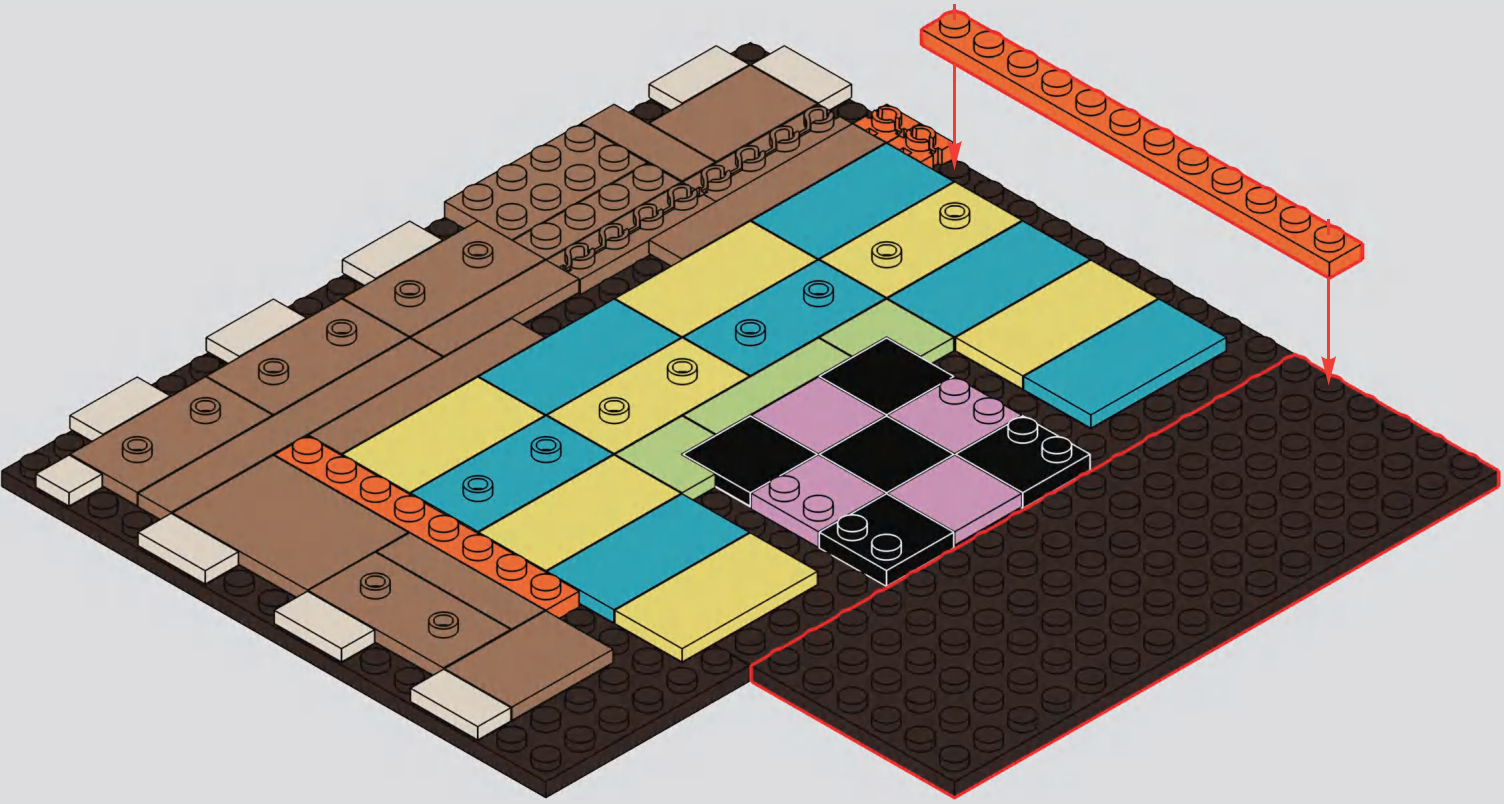

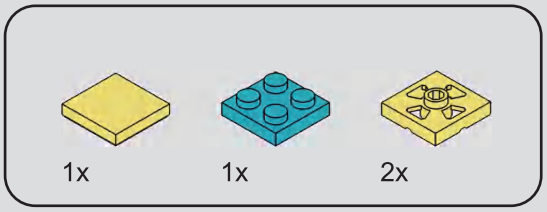


# 16

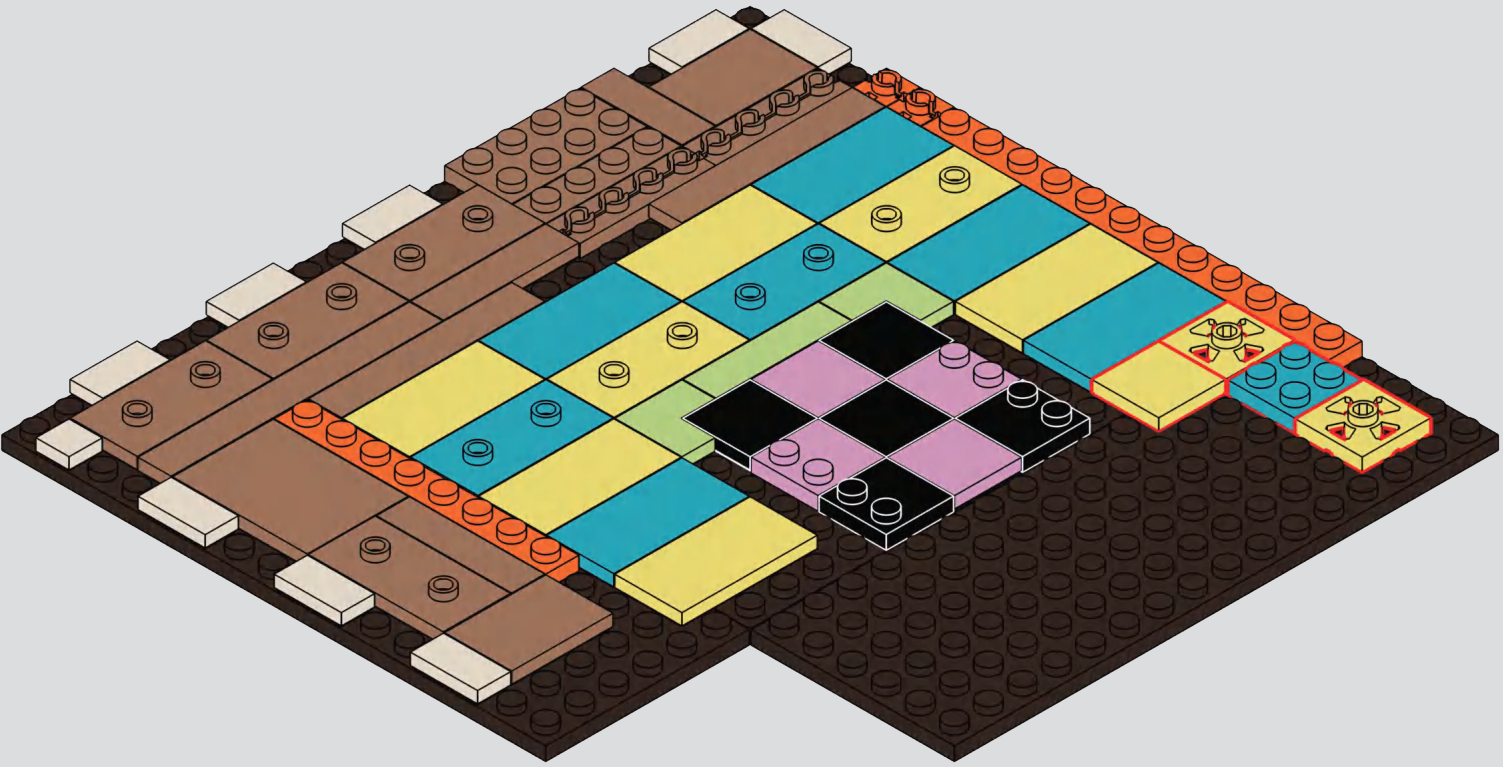

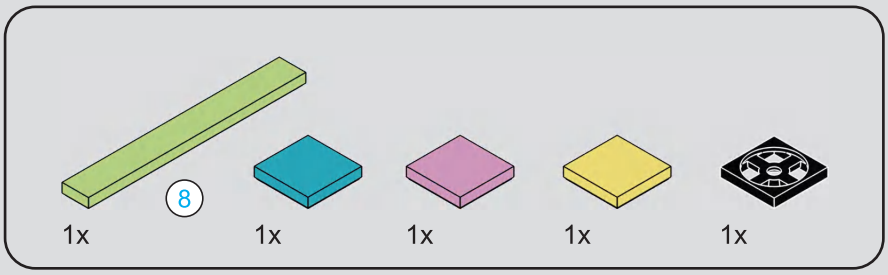


# 17

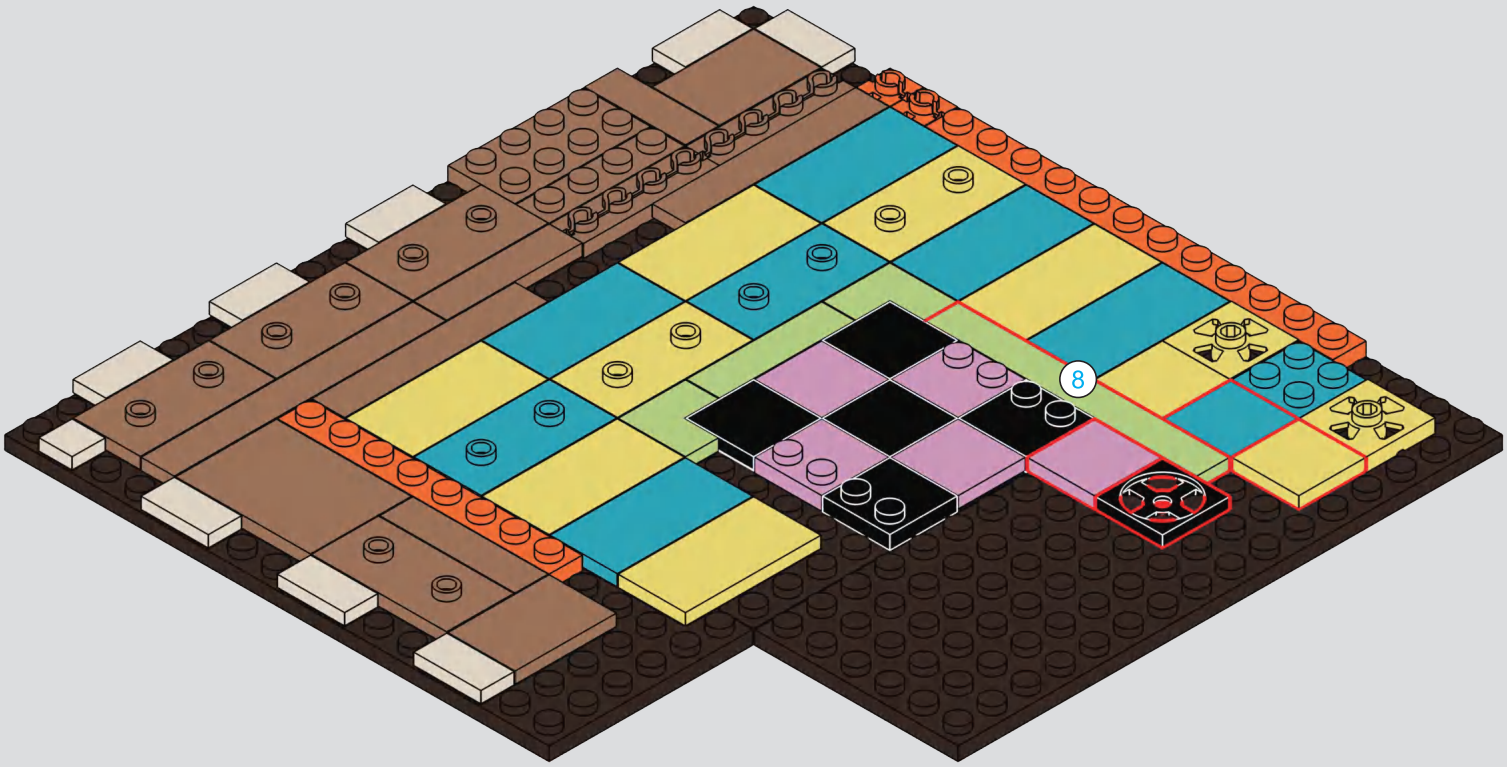

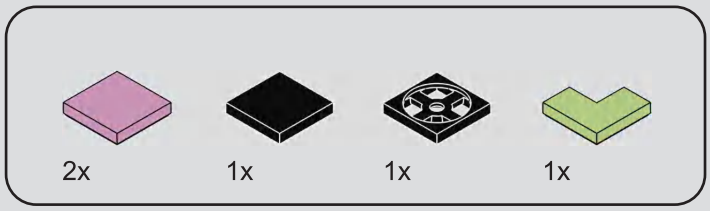


# 18

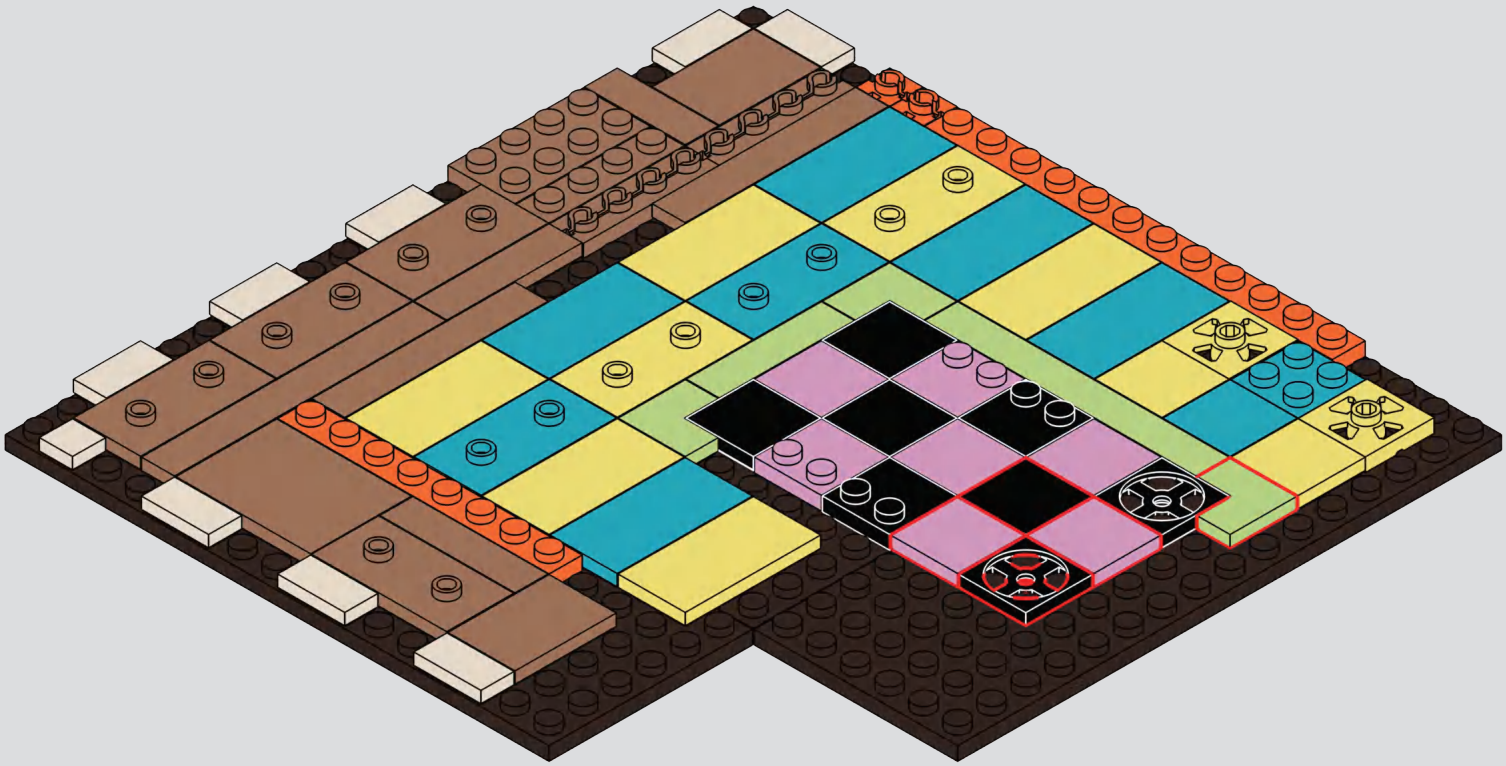

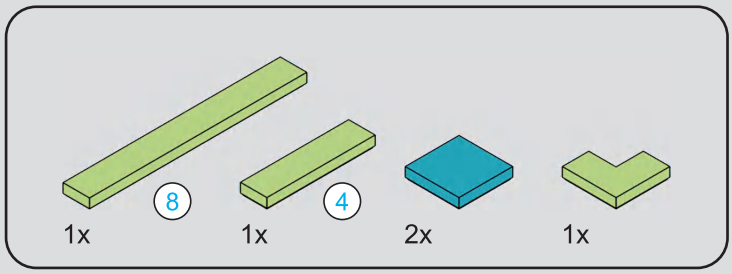


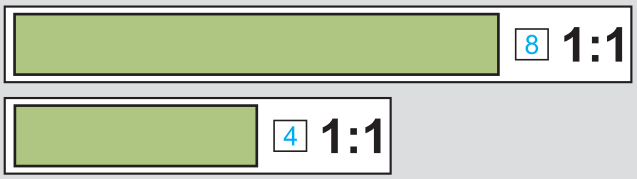


# 19

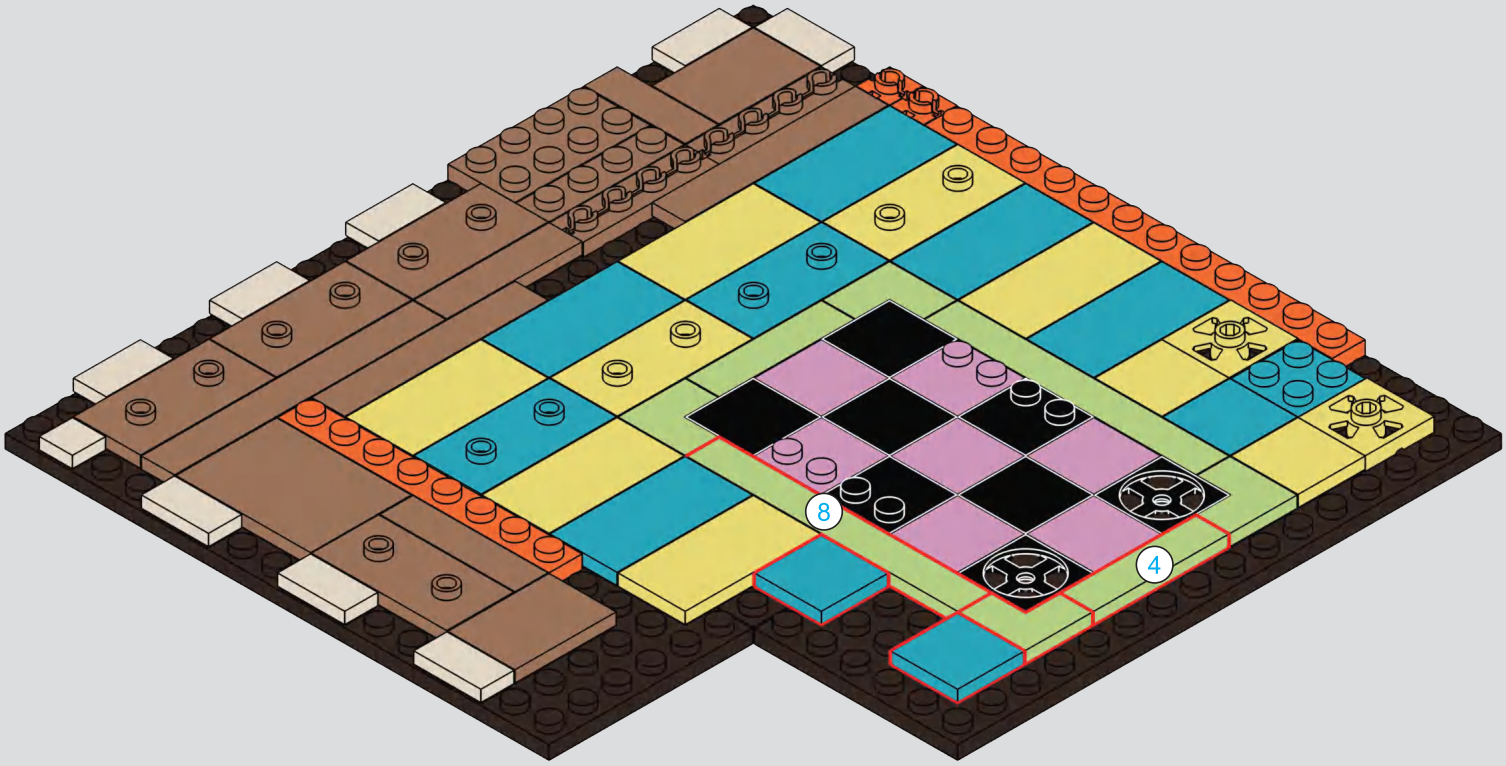

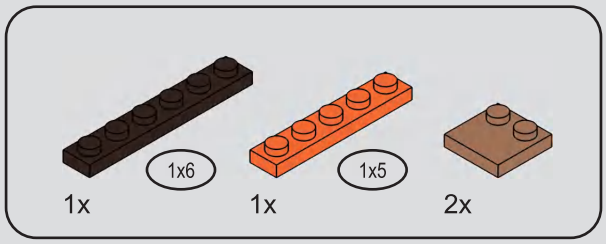


# 20

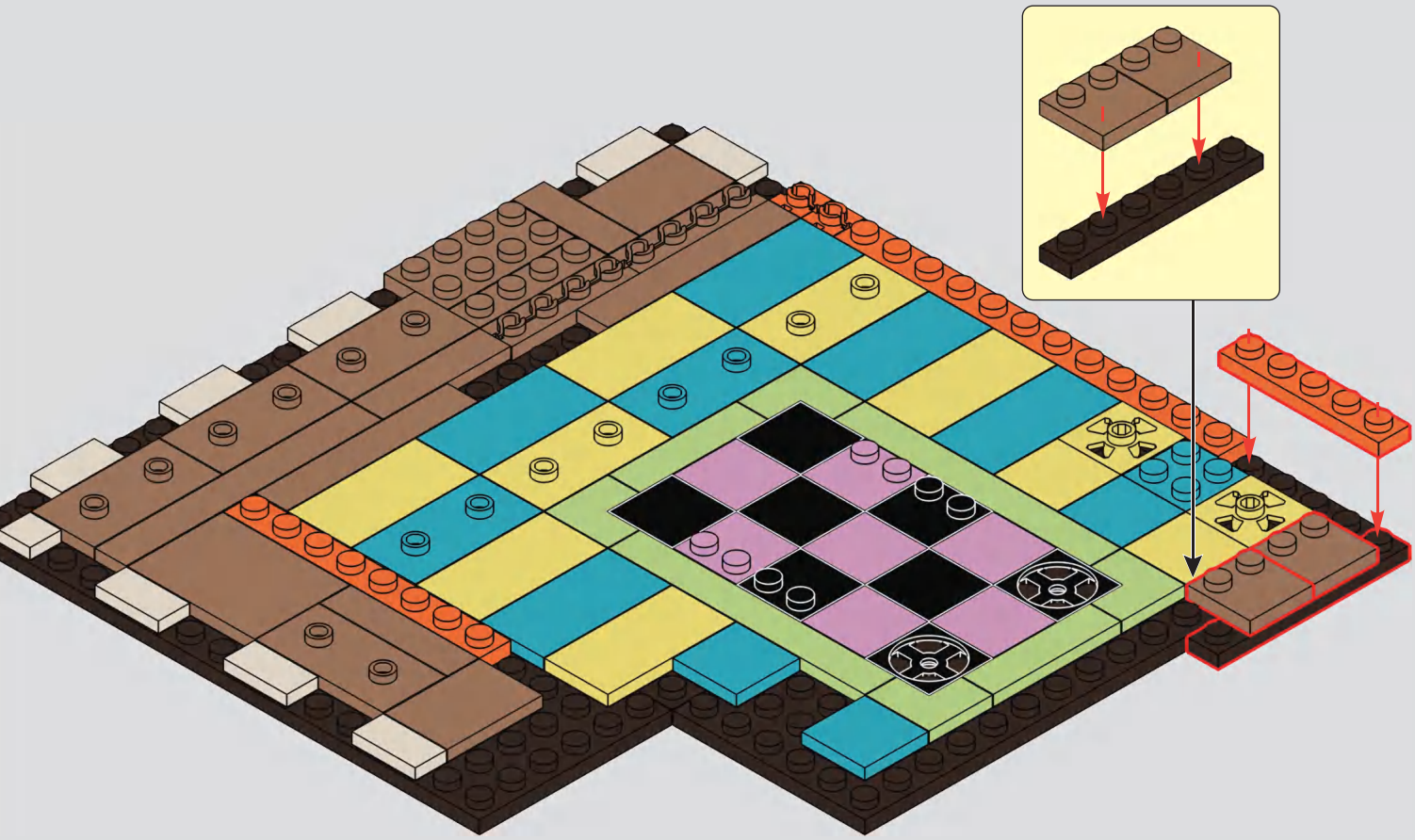

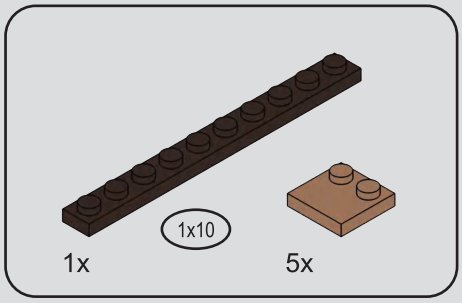


# 21

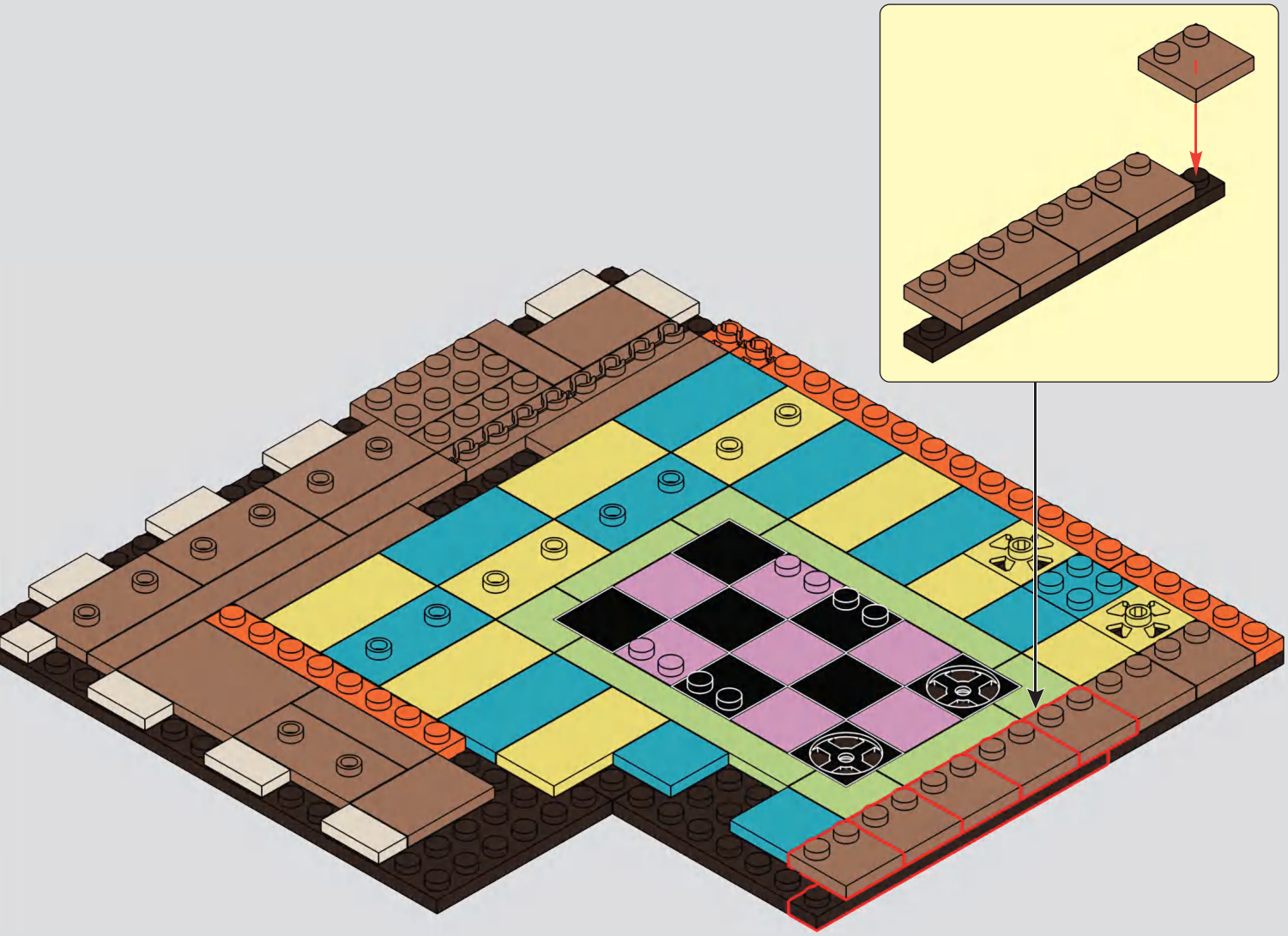

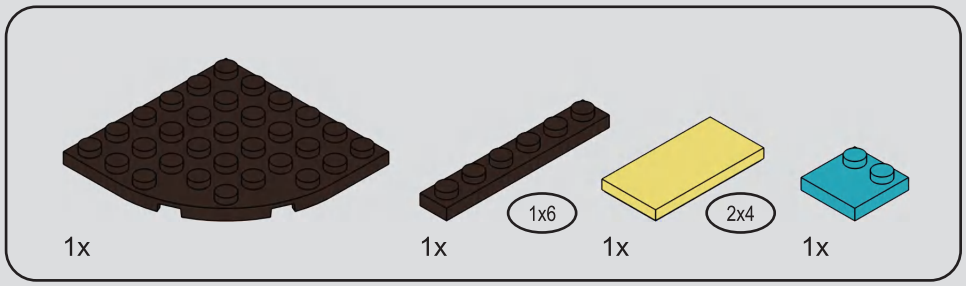


# 22

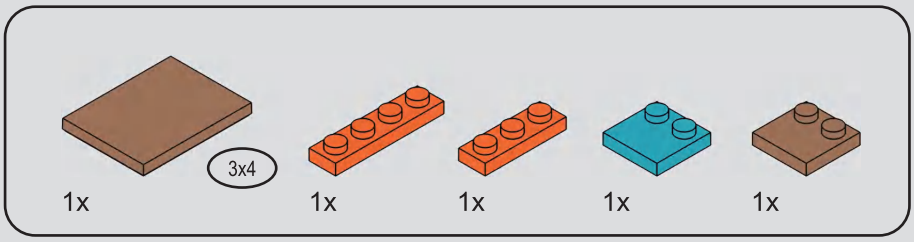


# 23

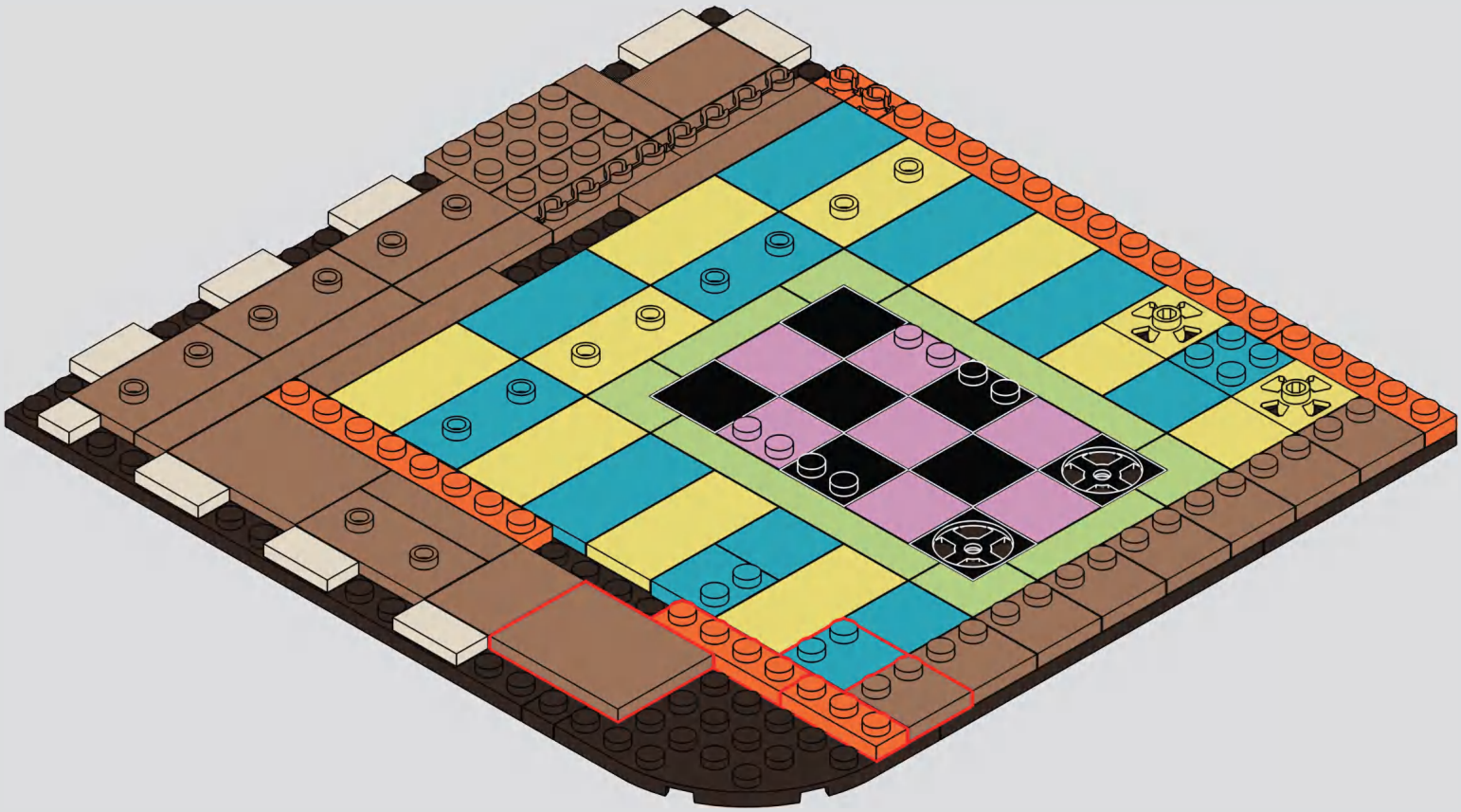

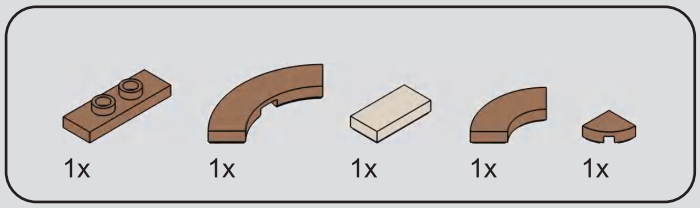


# 24

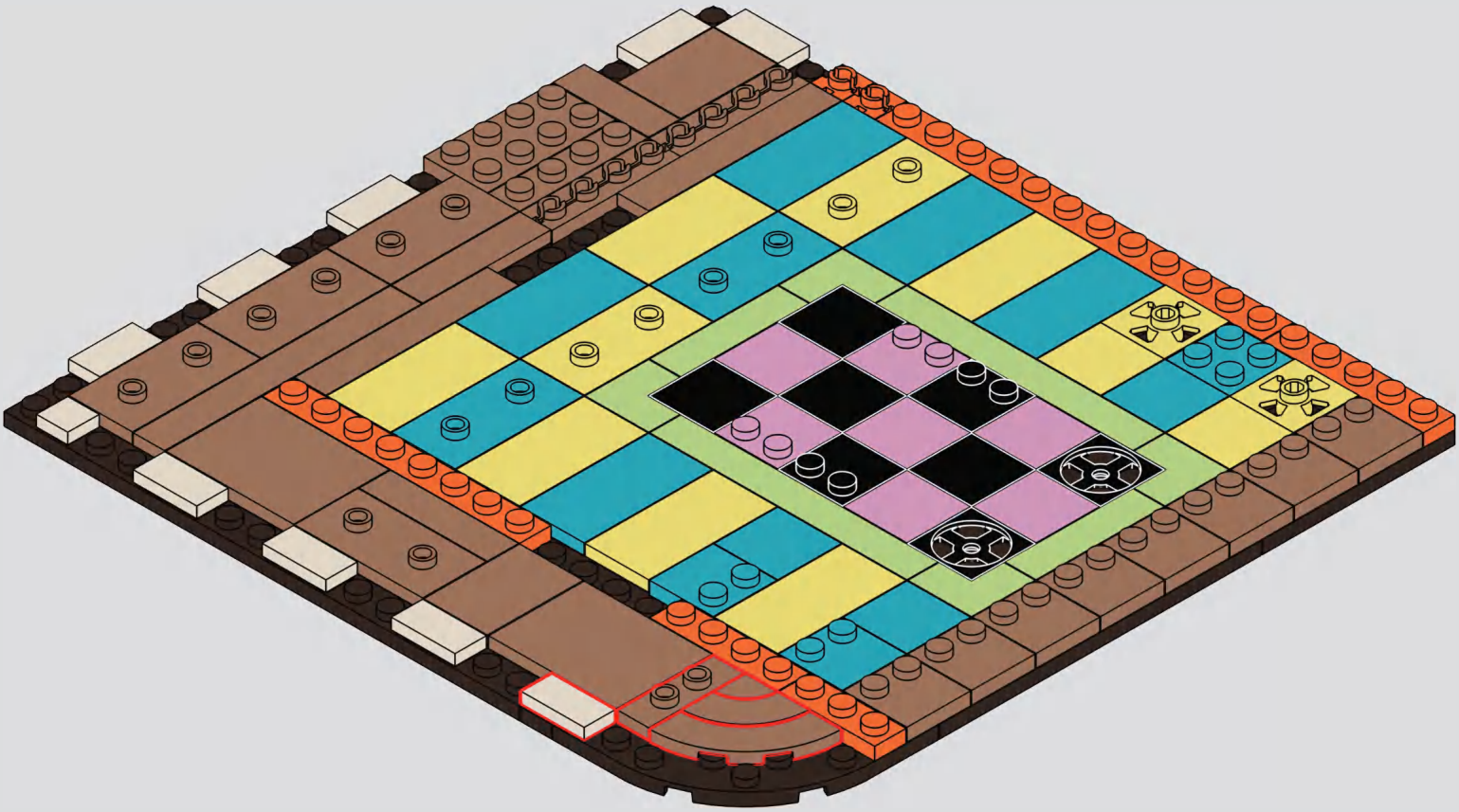

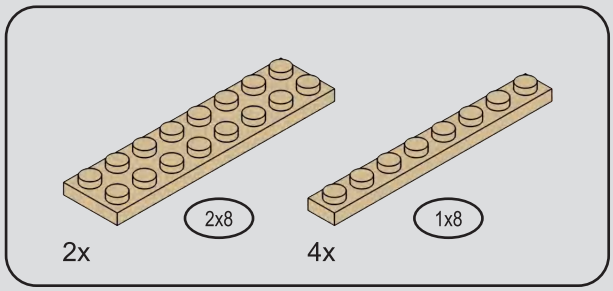


# 25

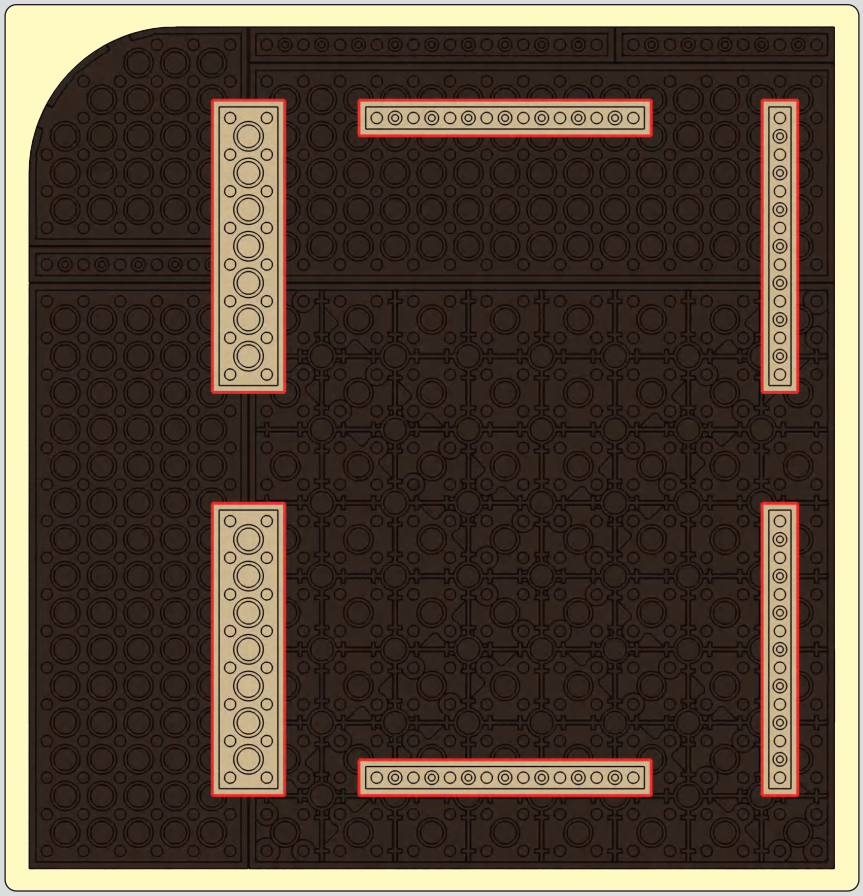

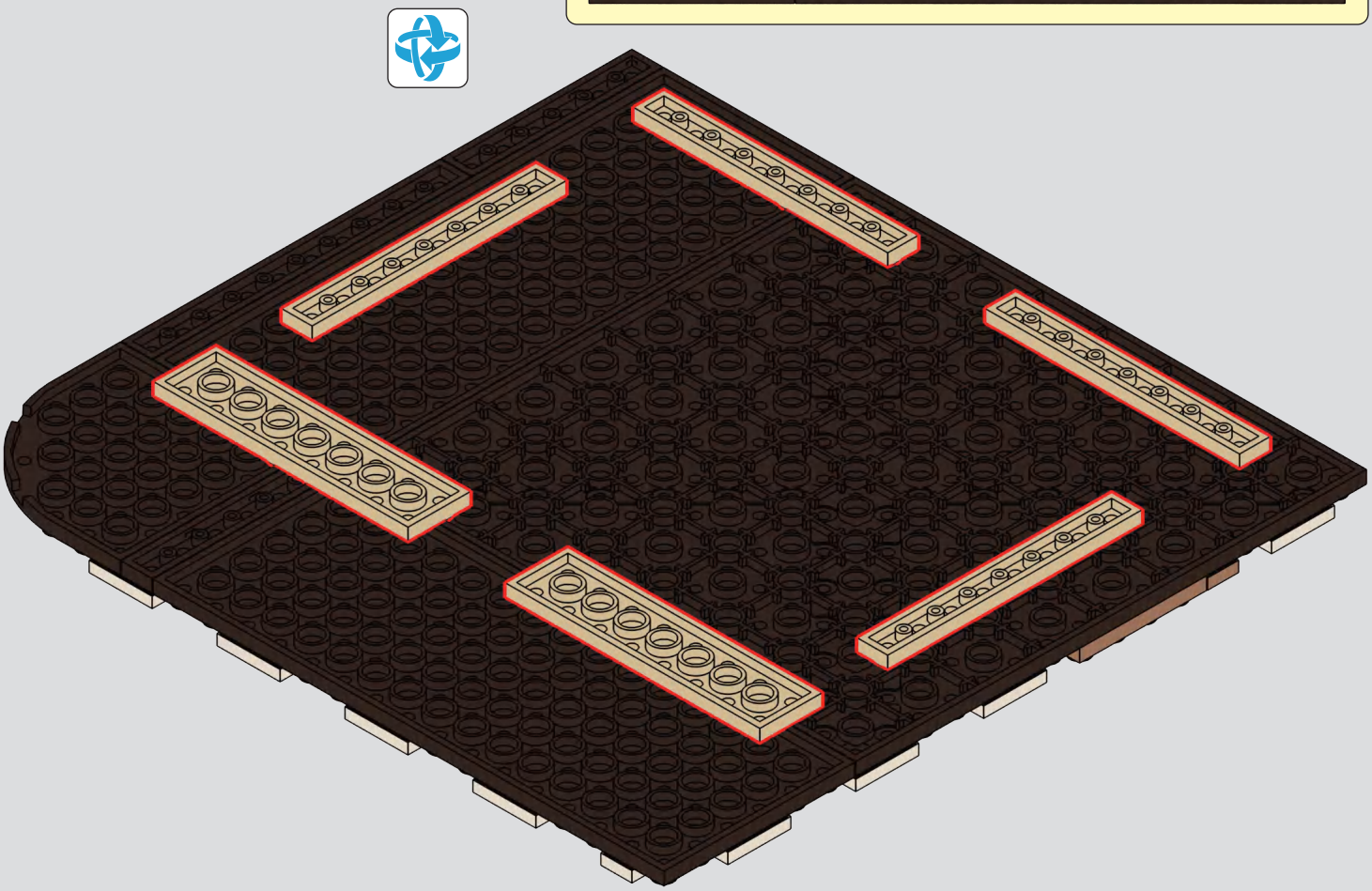

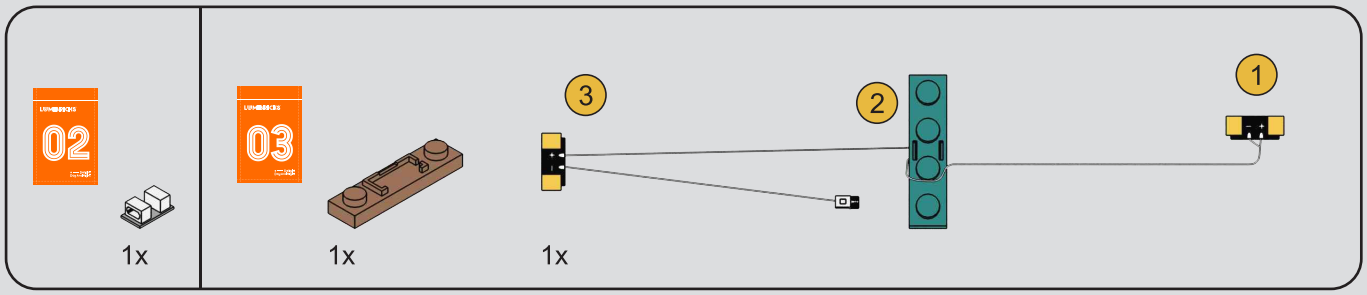


# 26

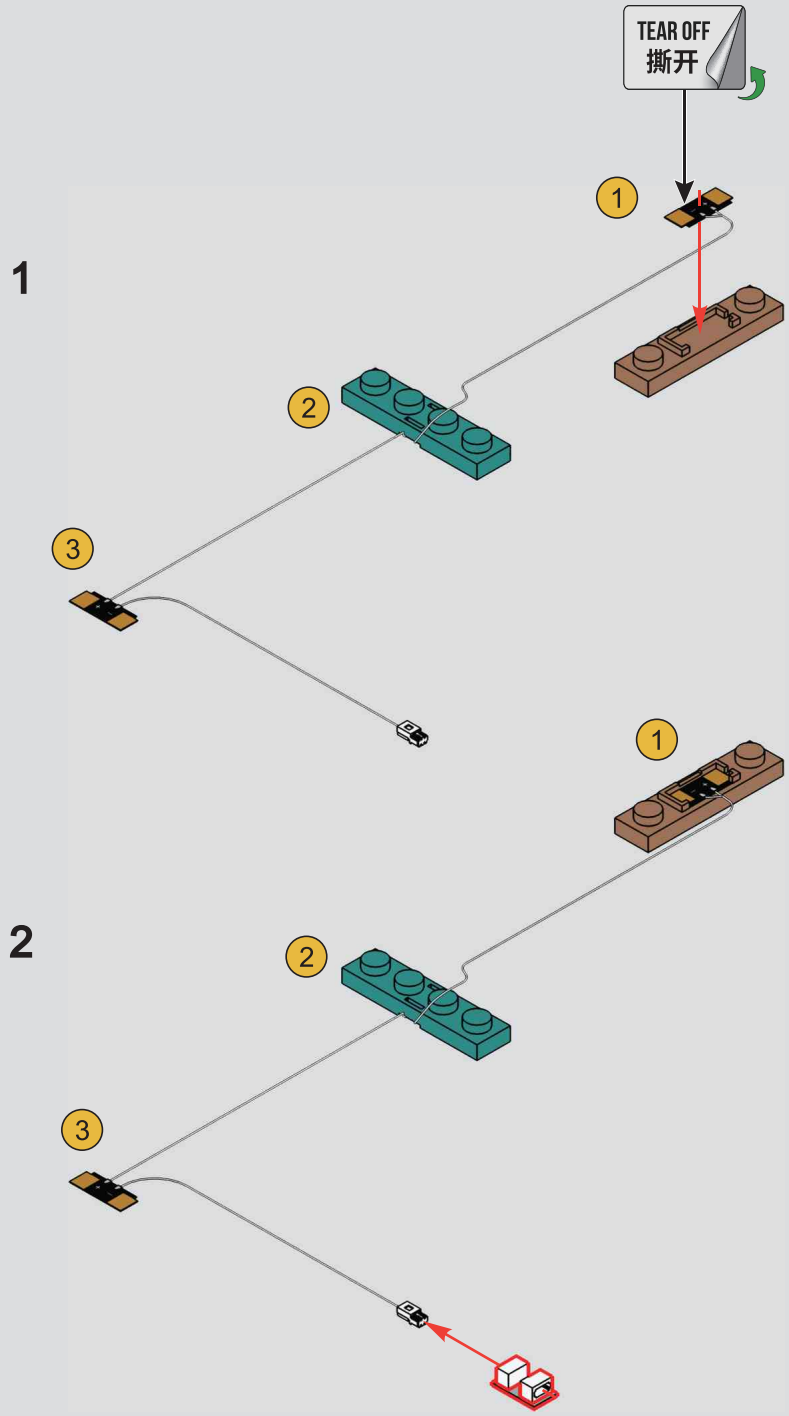

27

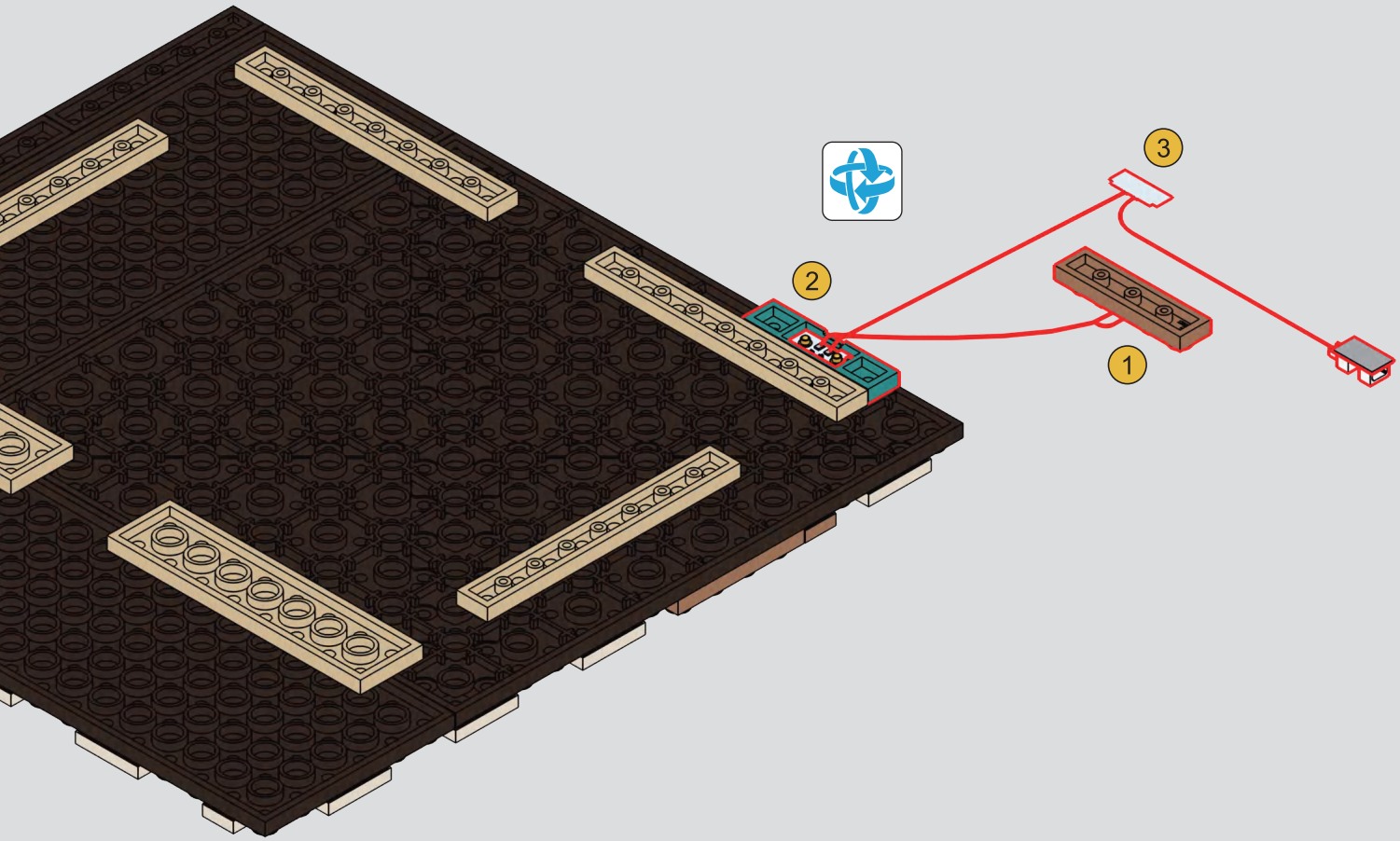

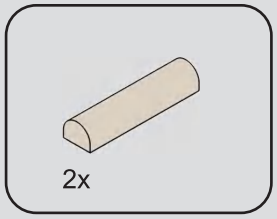


# 28

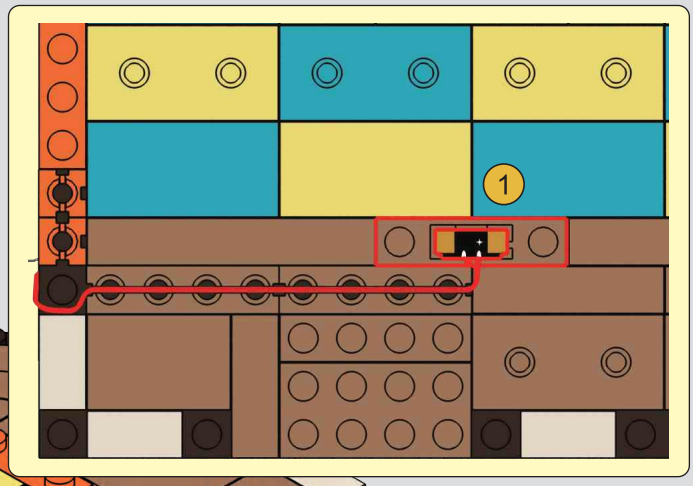


1

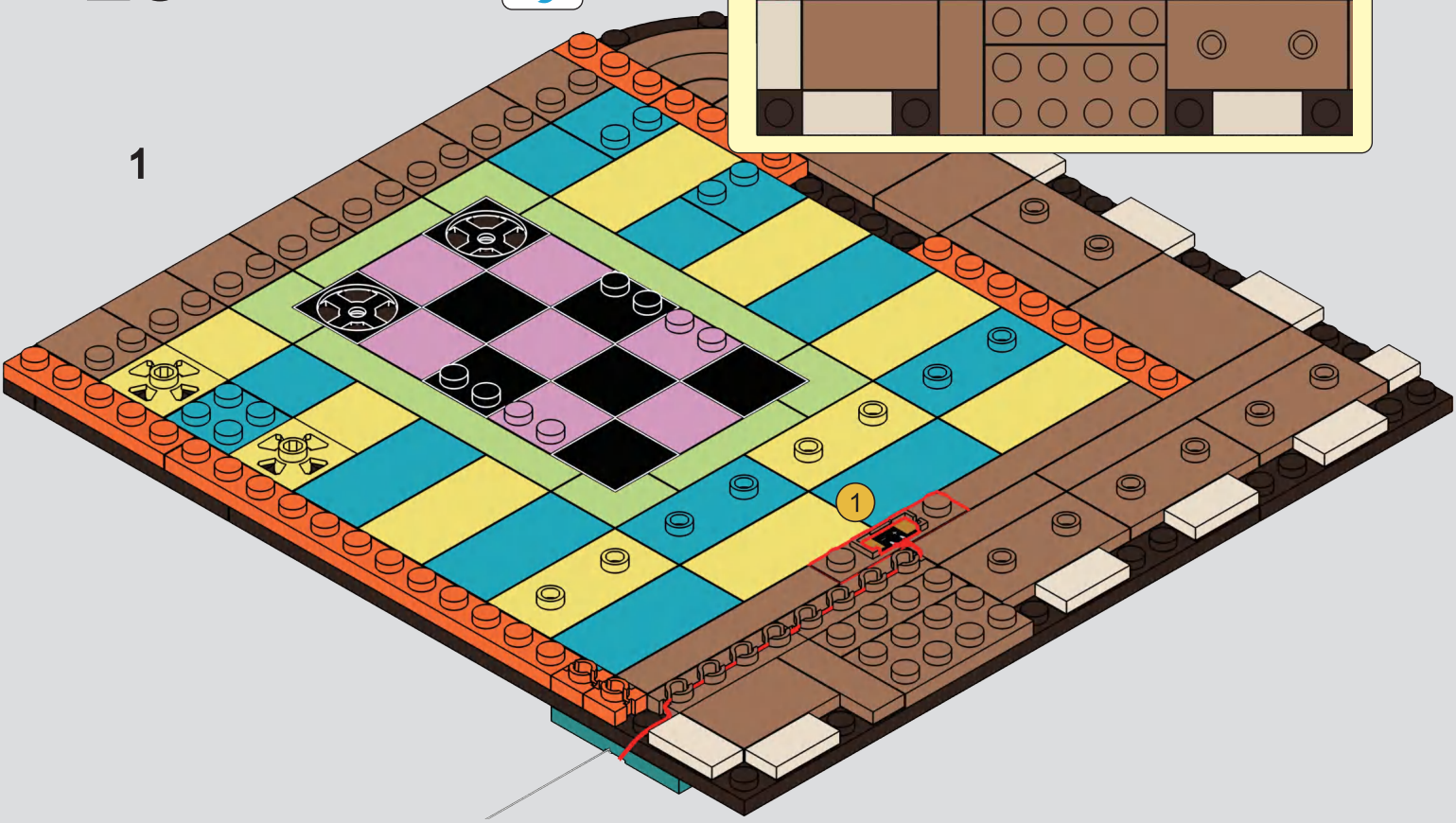


2

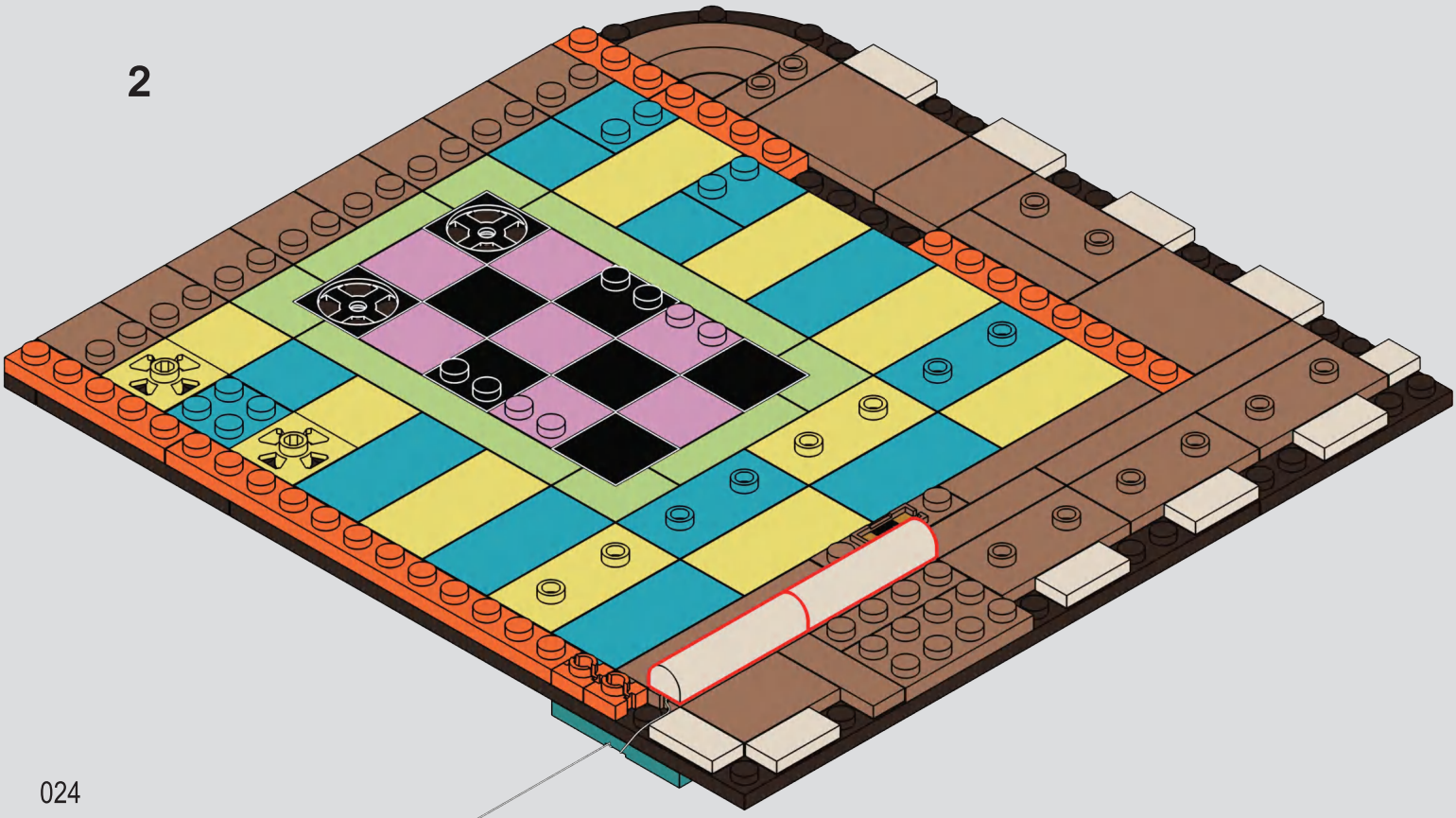

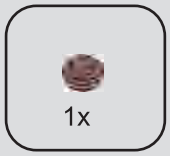


29

1

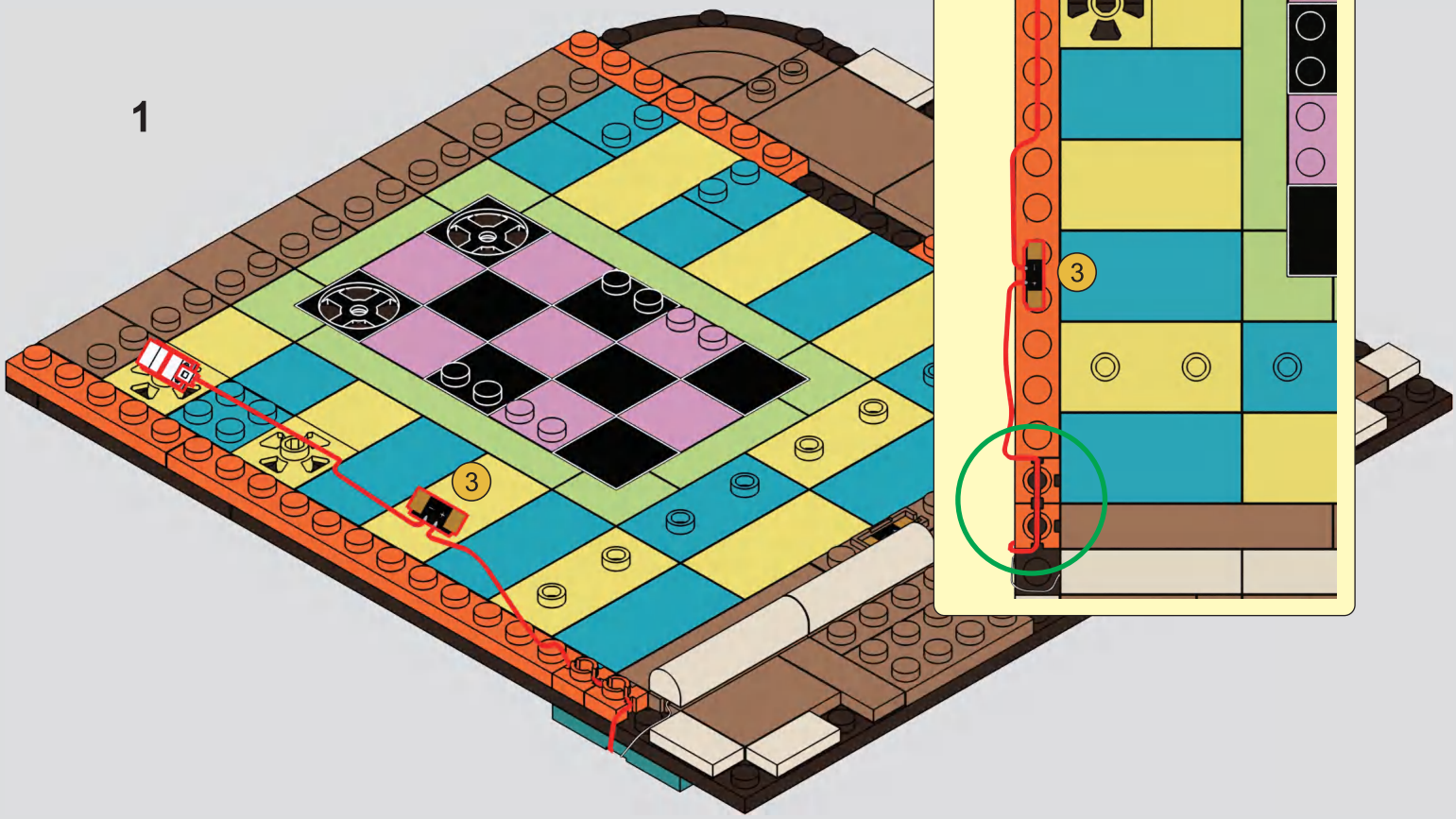


2

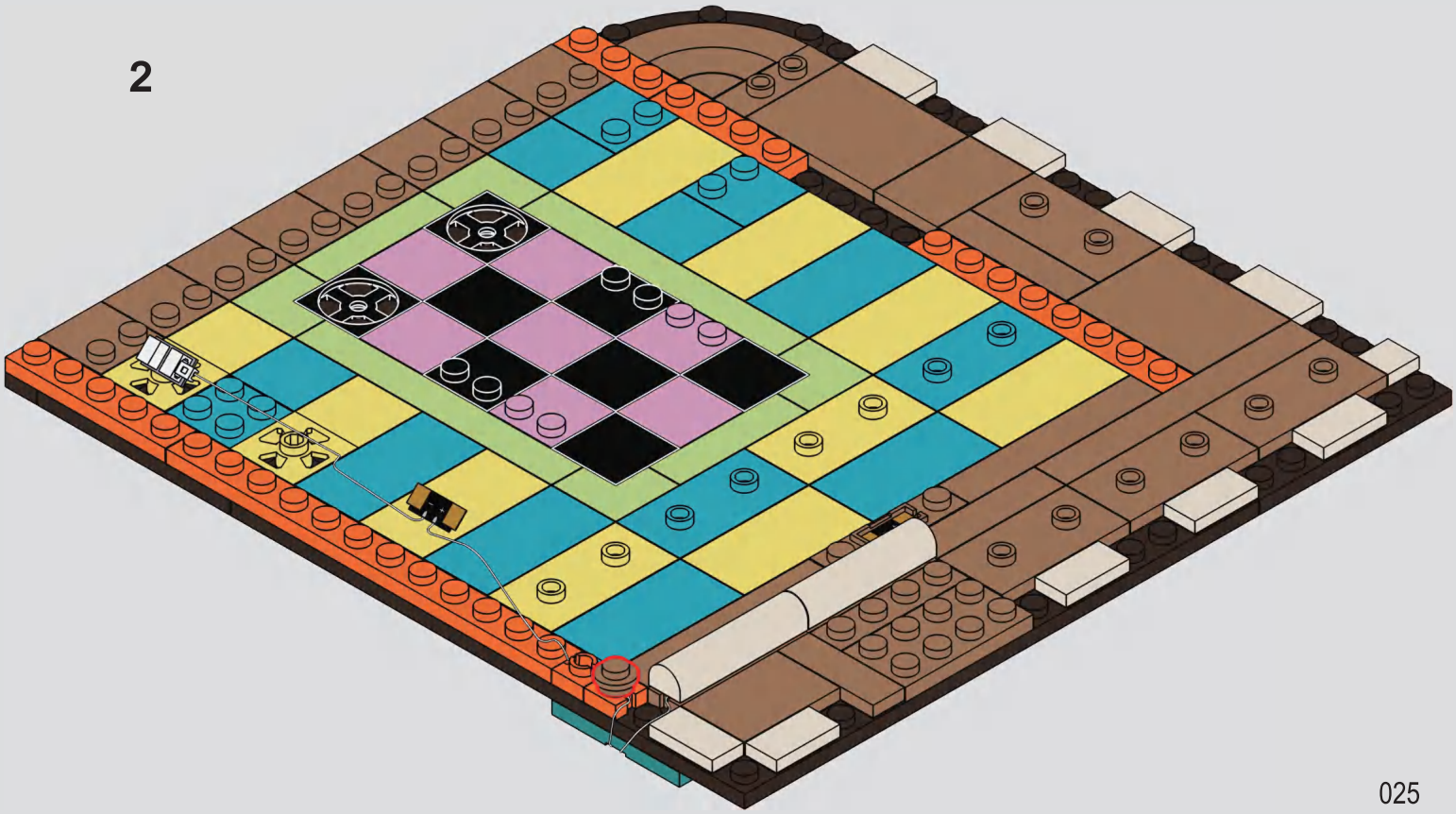

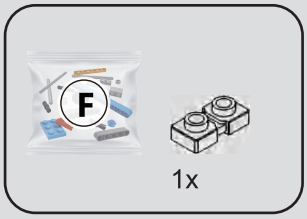


30

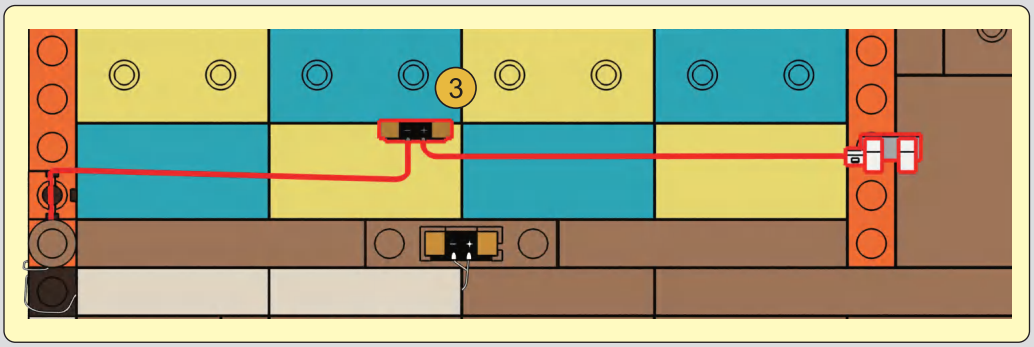


1

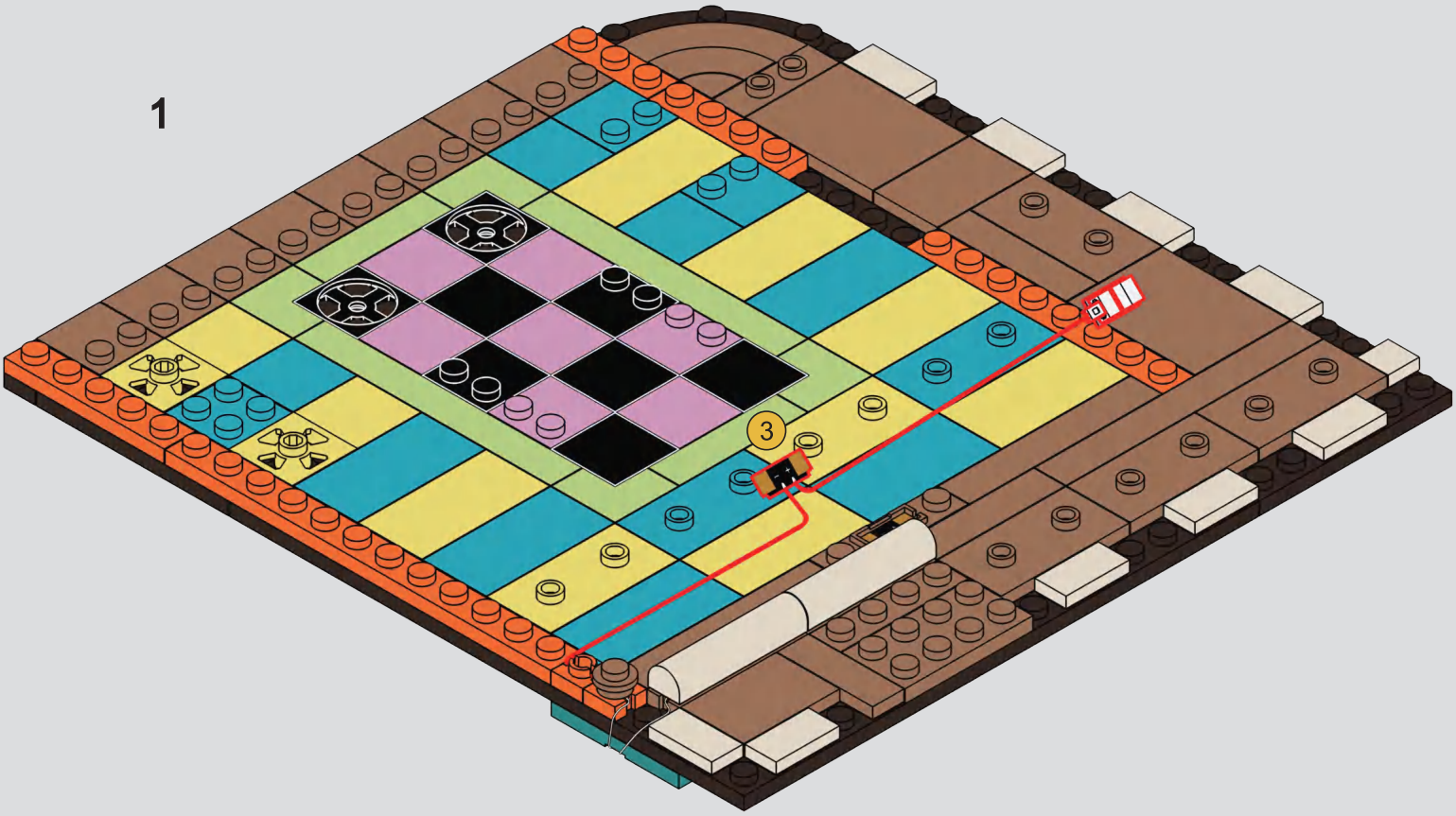


2

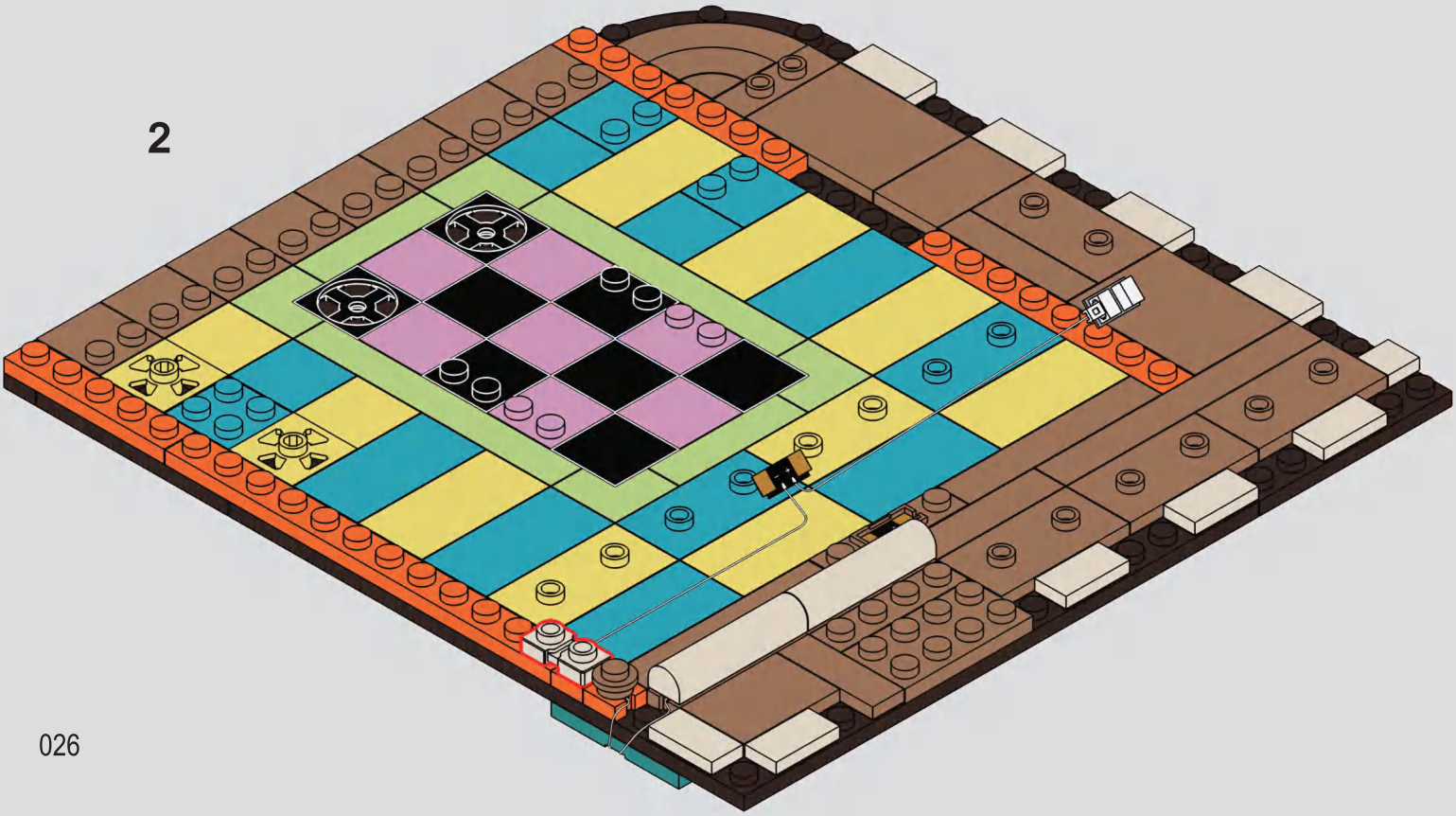

8
F
LUMIBRICKS
03
MOONBAR

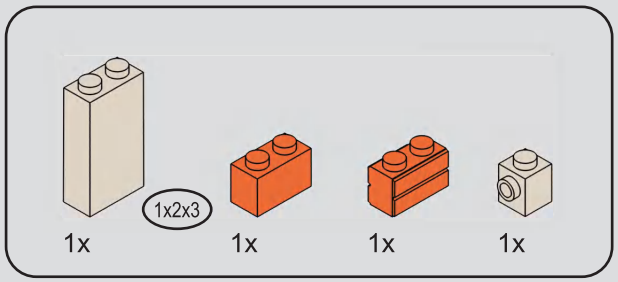


# 31

1

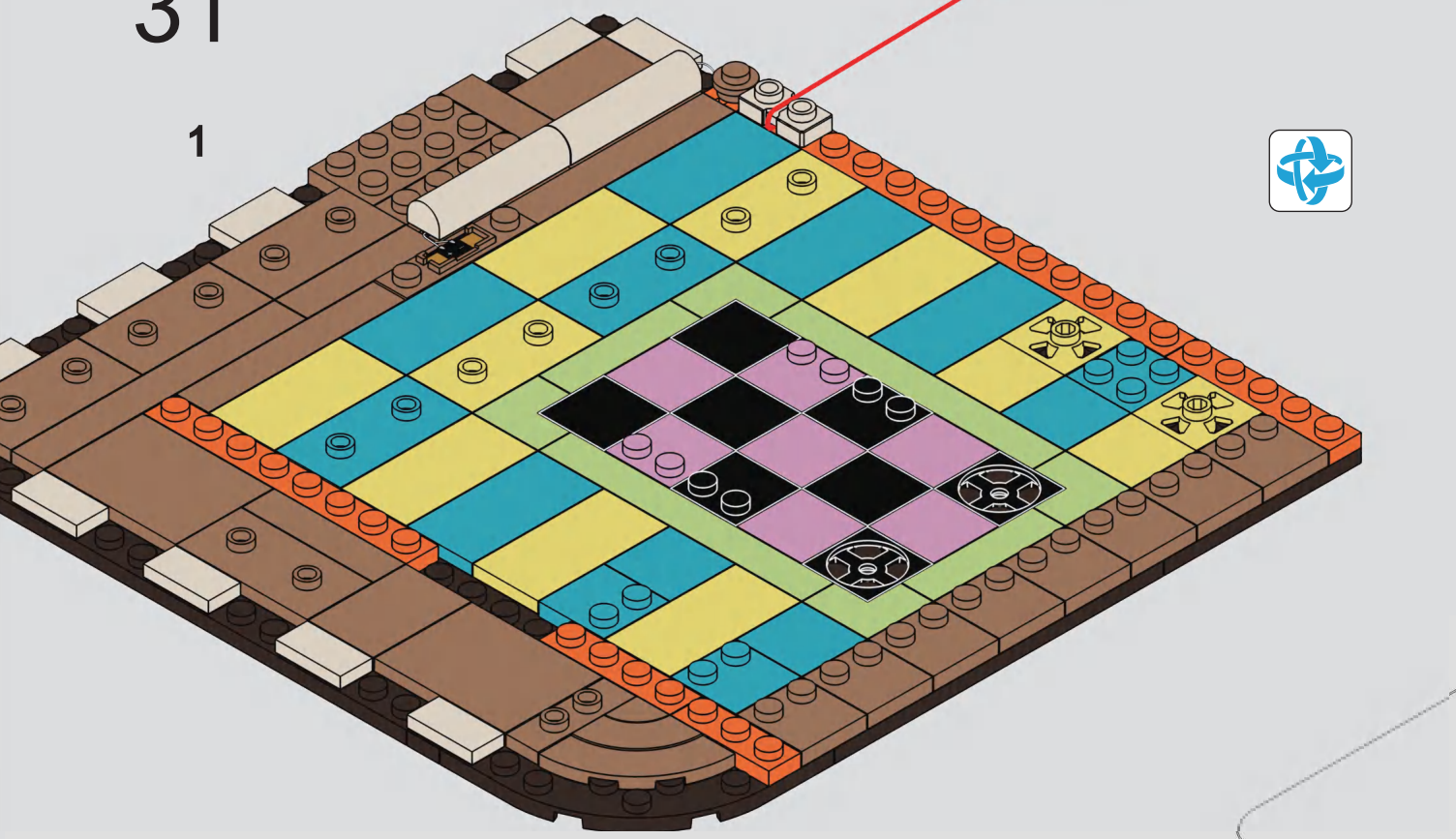


2

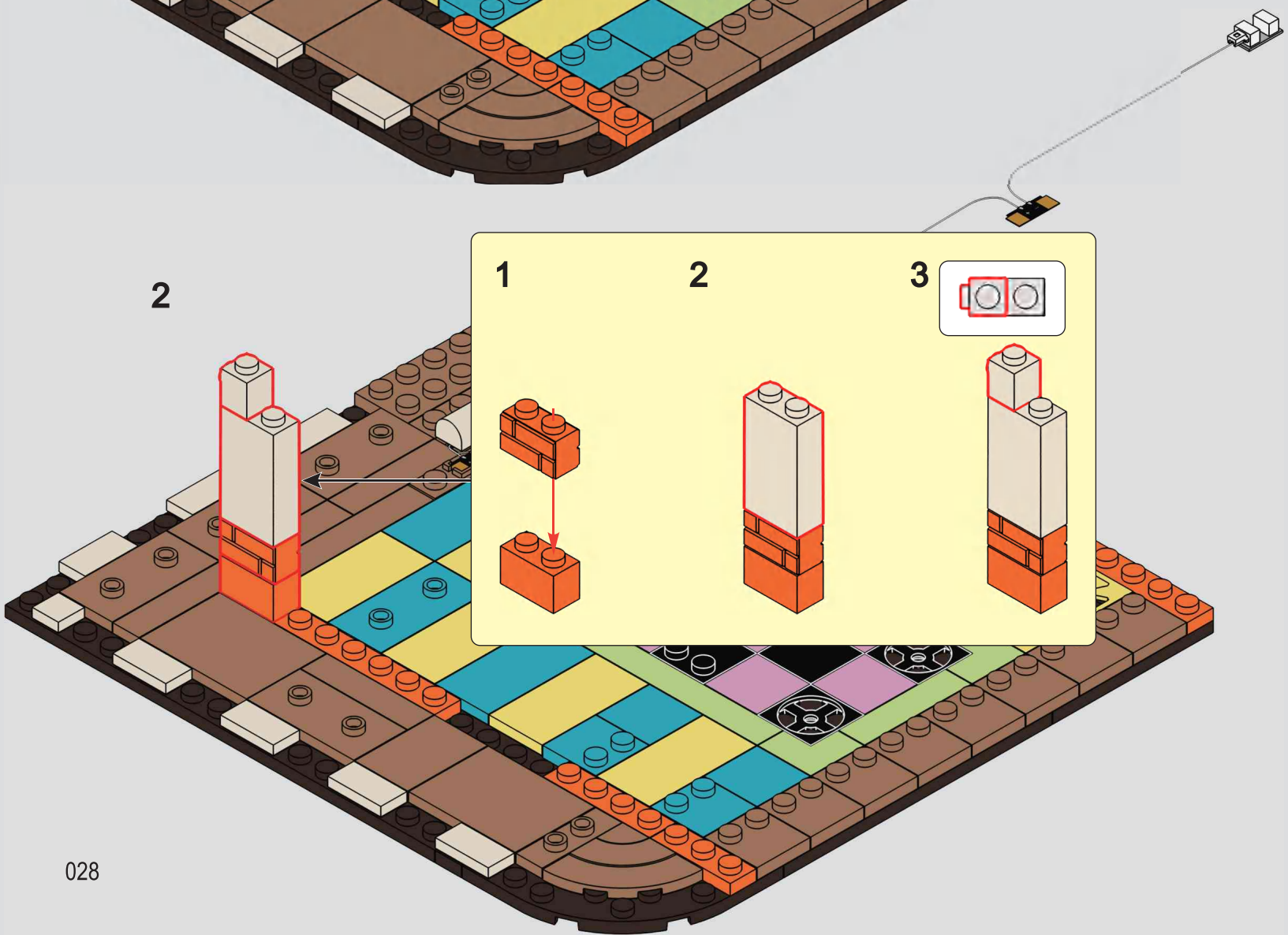

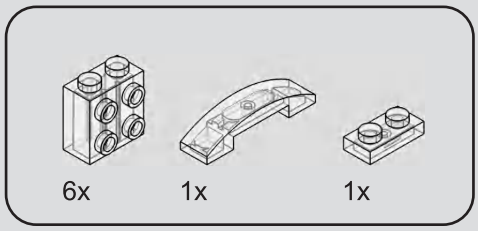


# 32

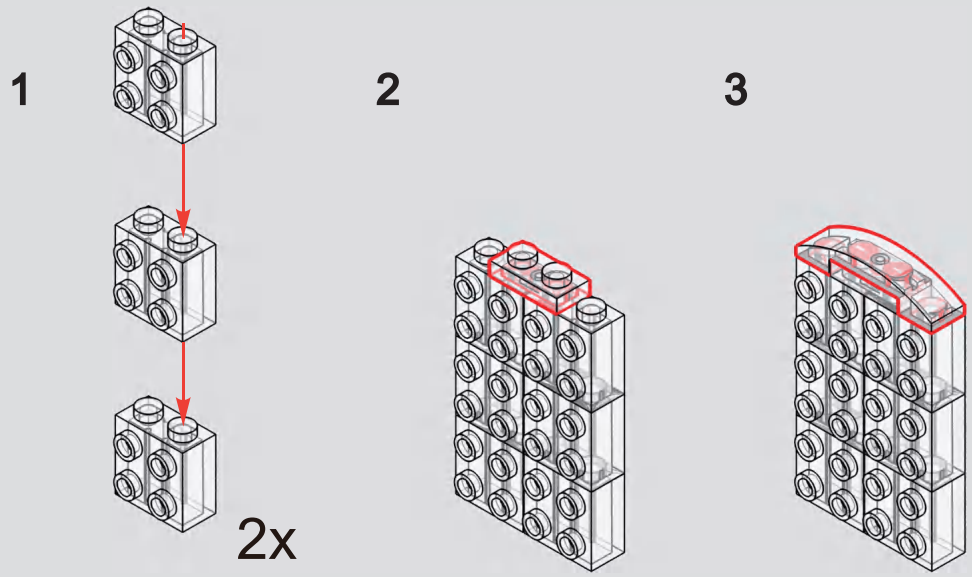


---

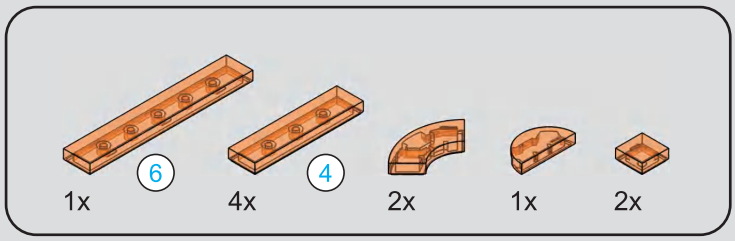


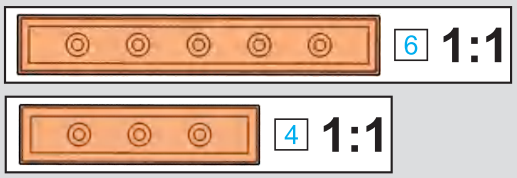


# 33

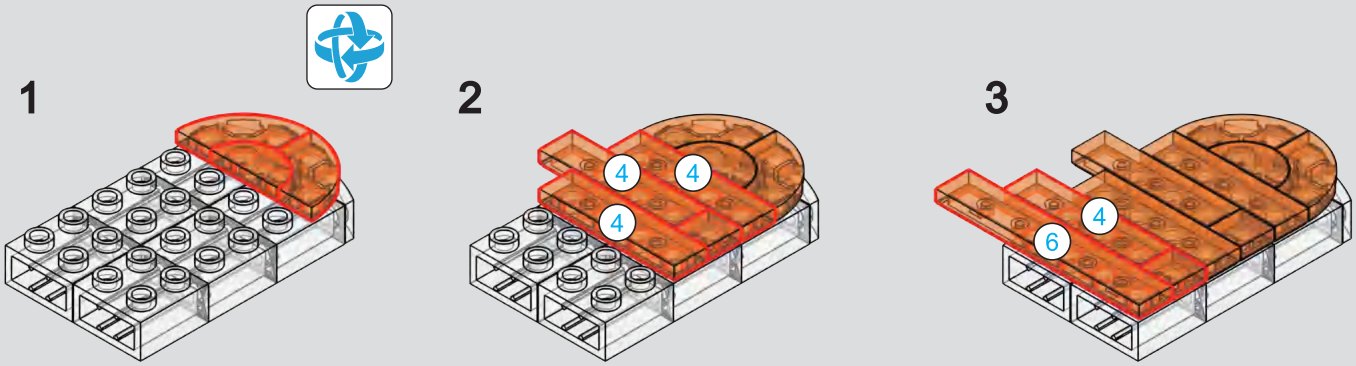

# 34

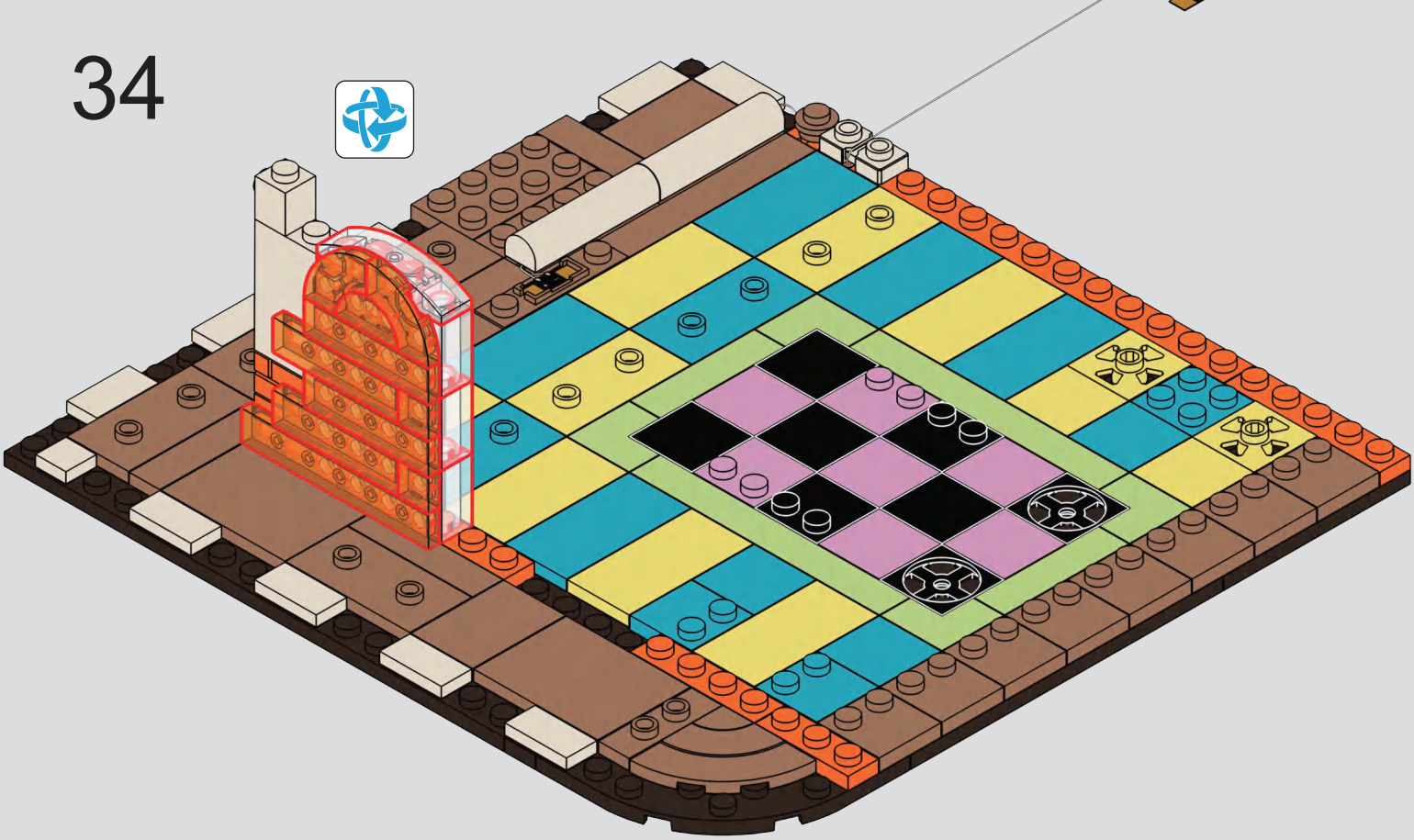




# 35

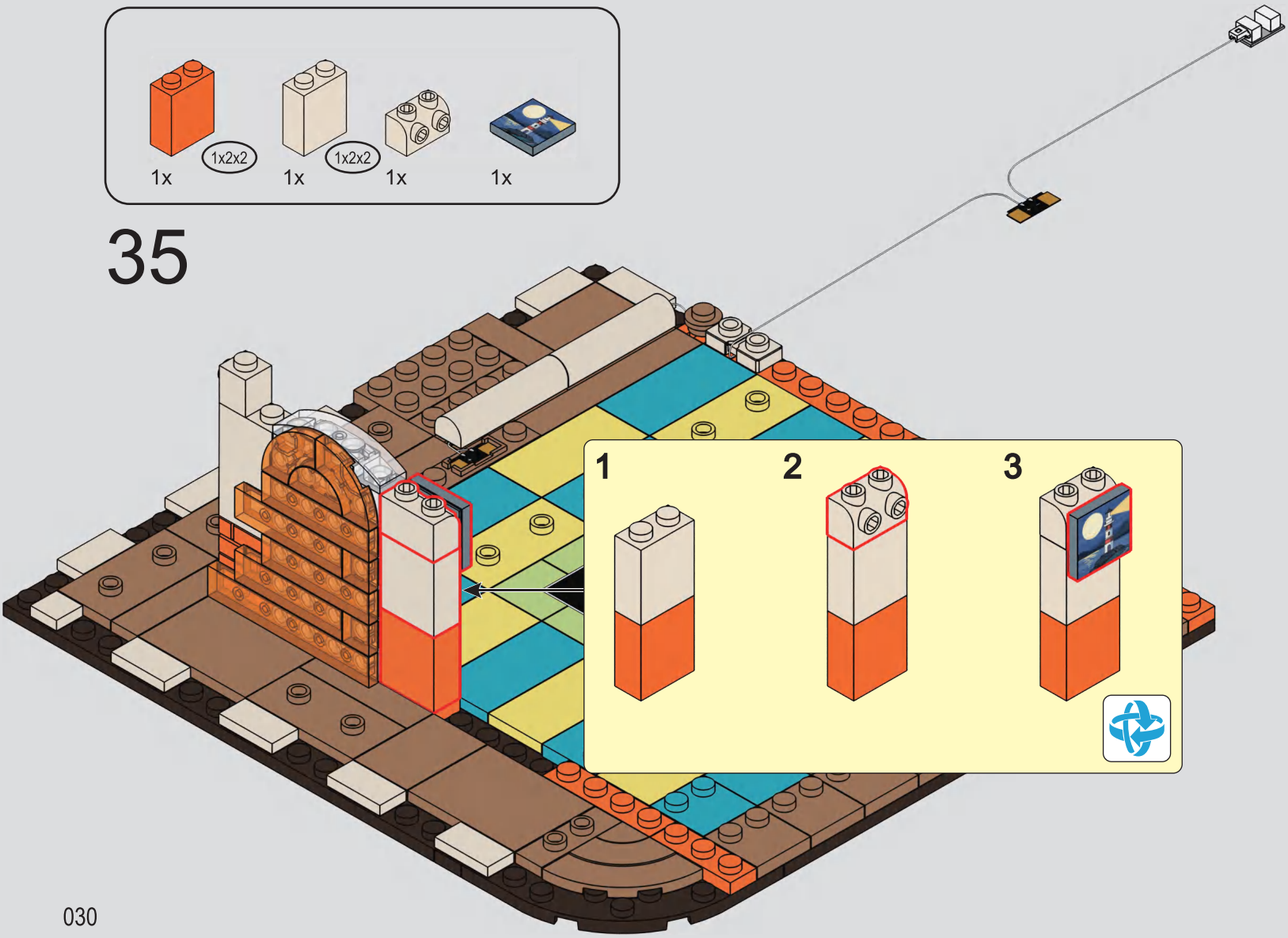

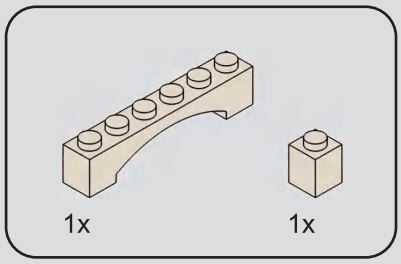


# 36

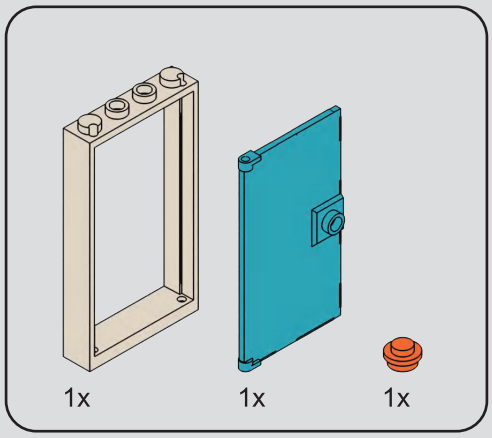


# 37

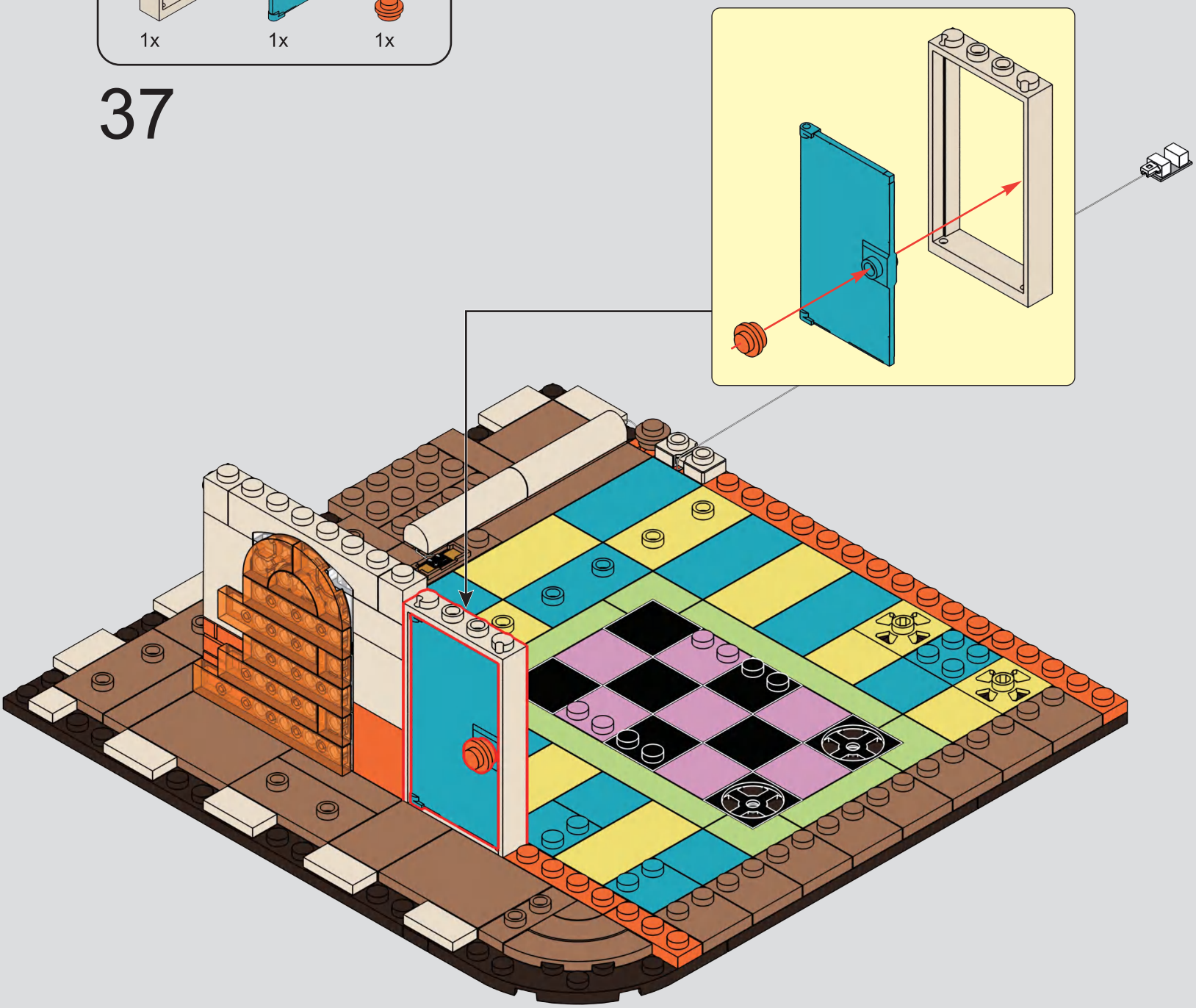

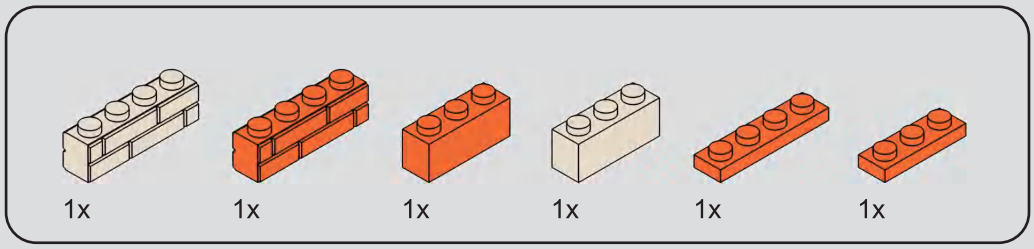


# 38

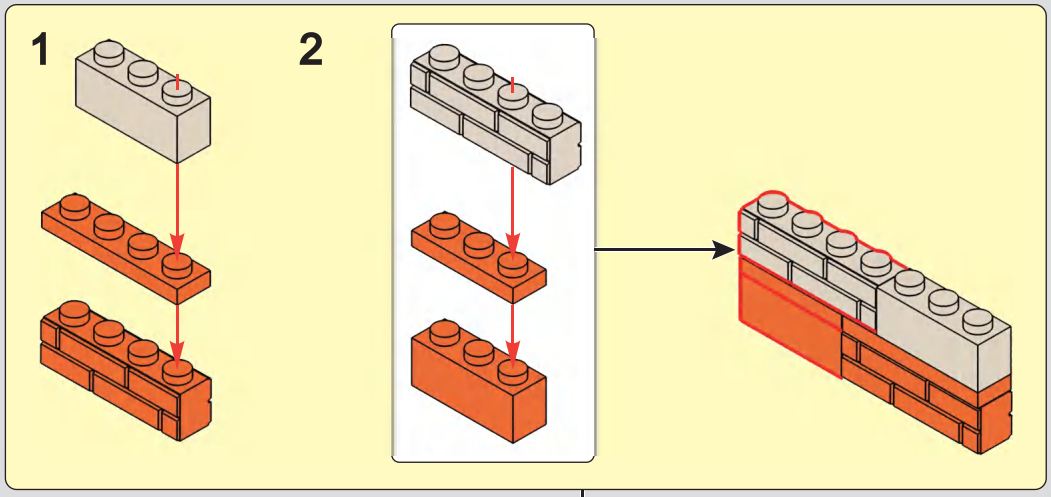


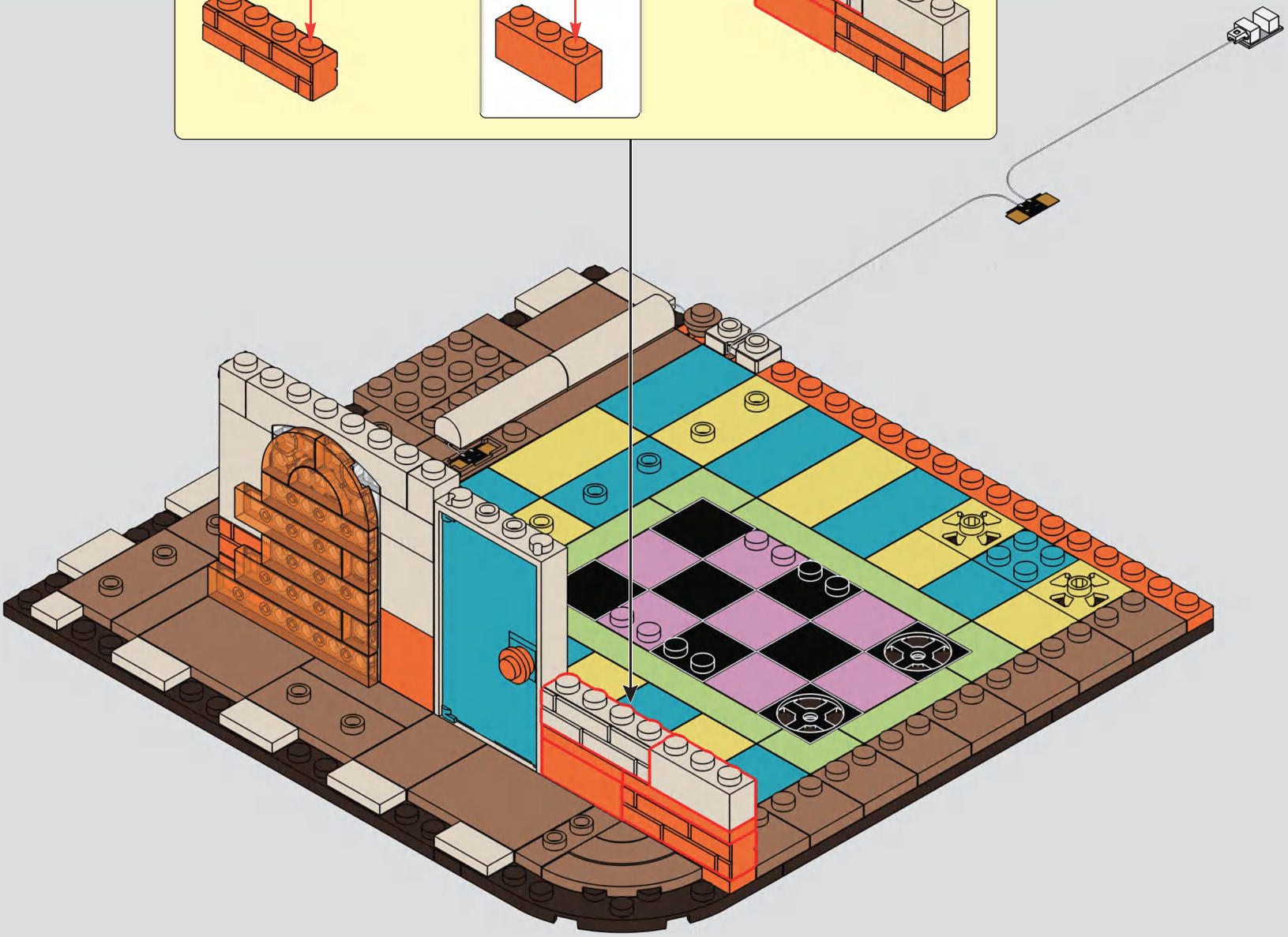

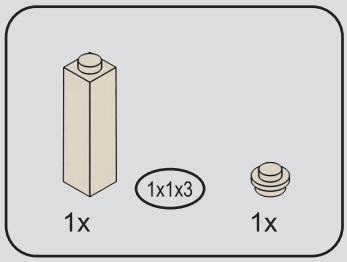


# 39

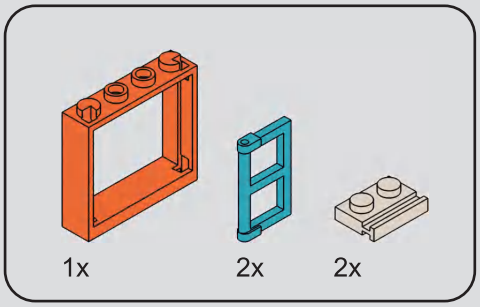


# 40

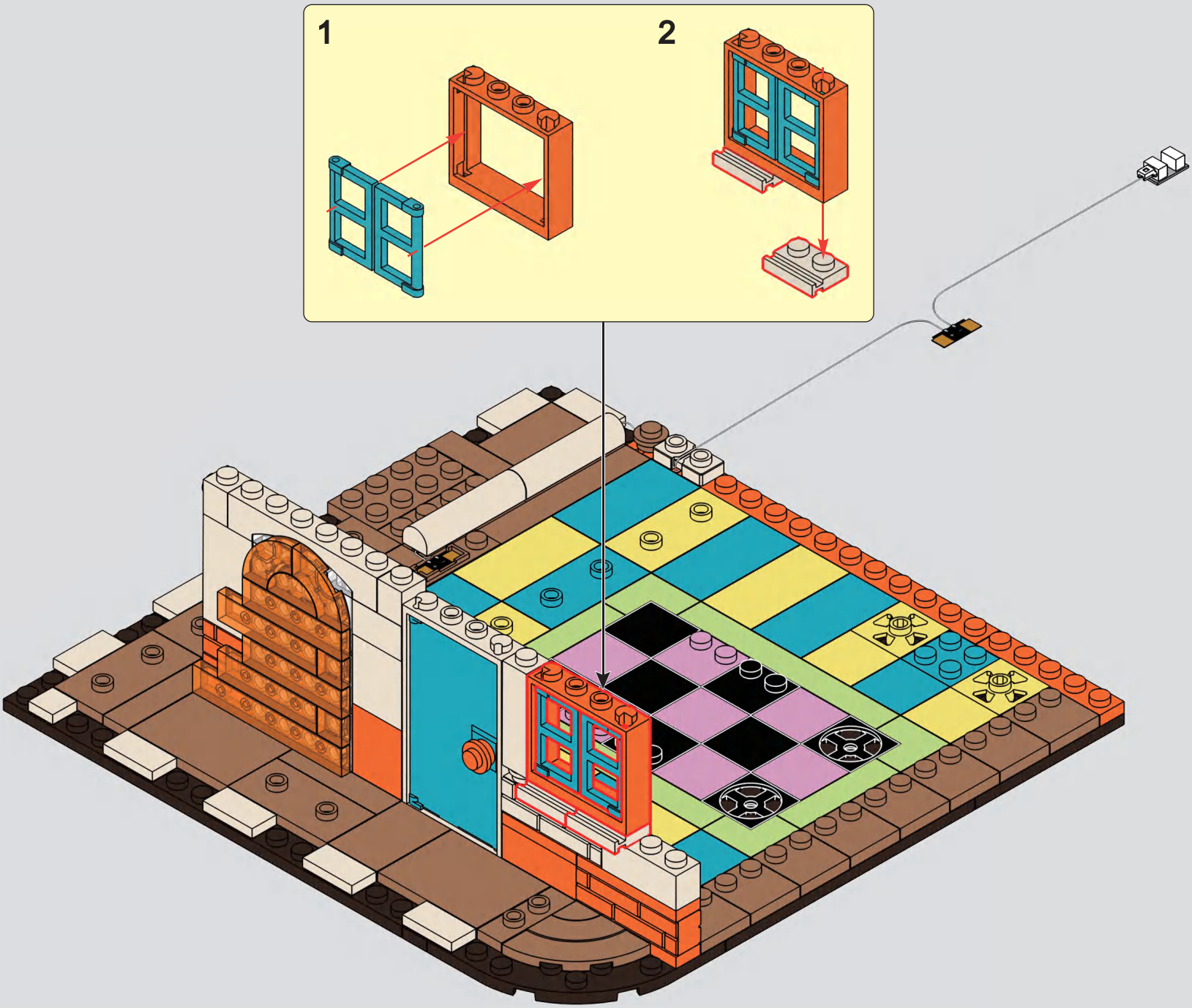

41

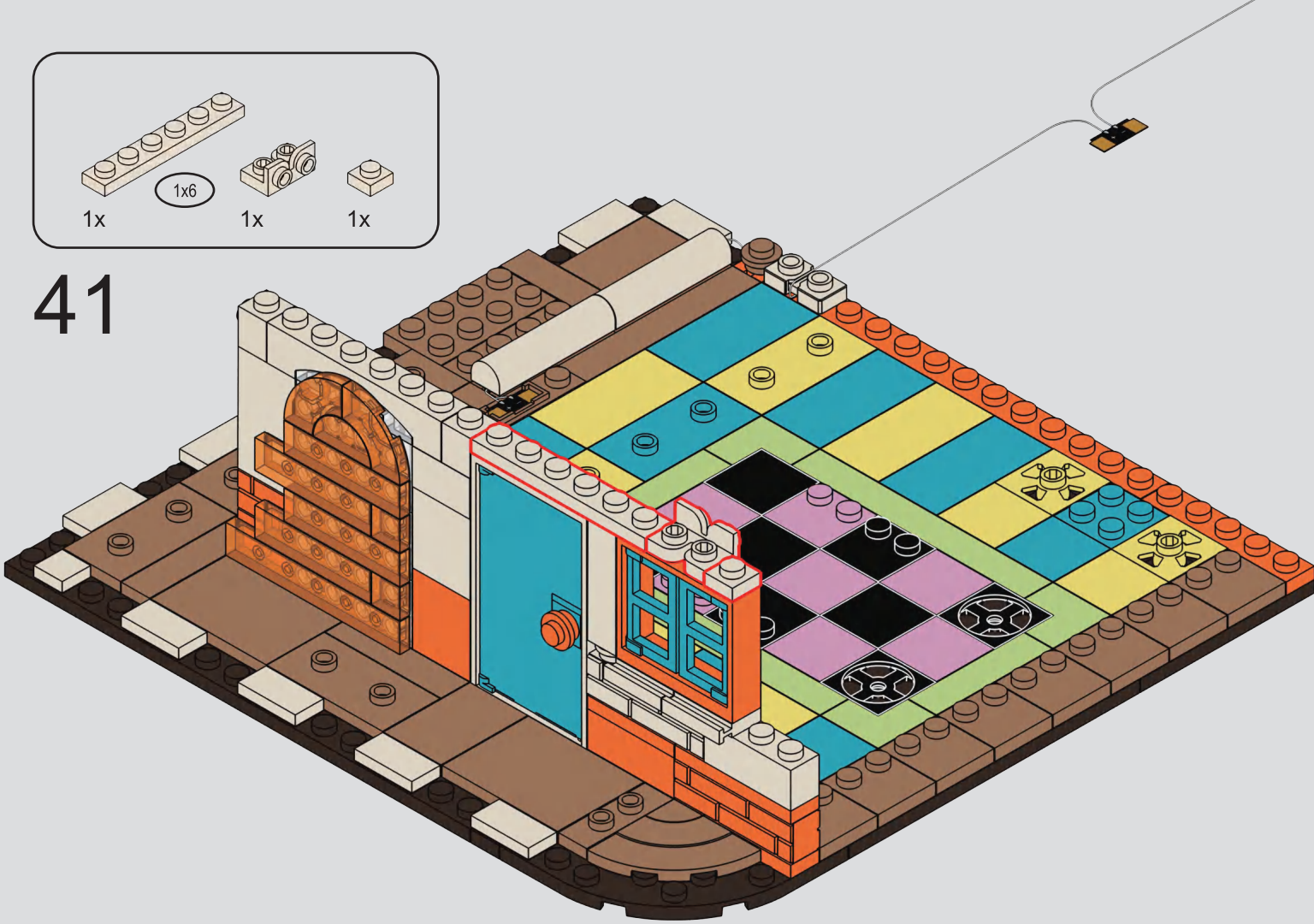

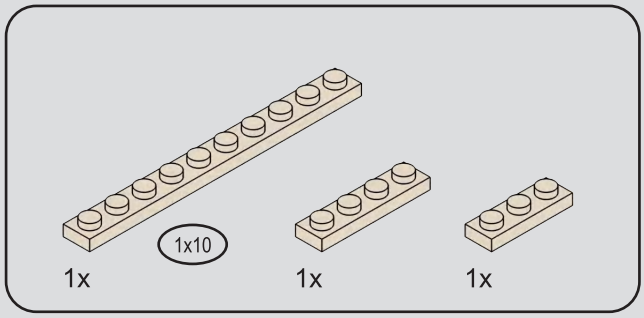


42

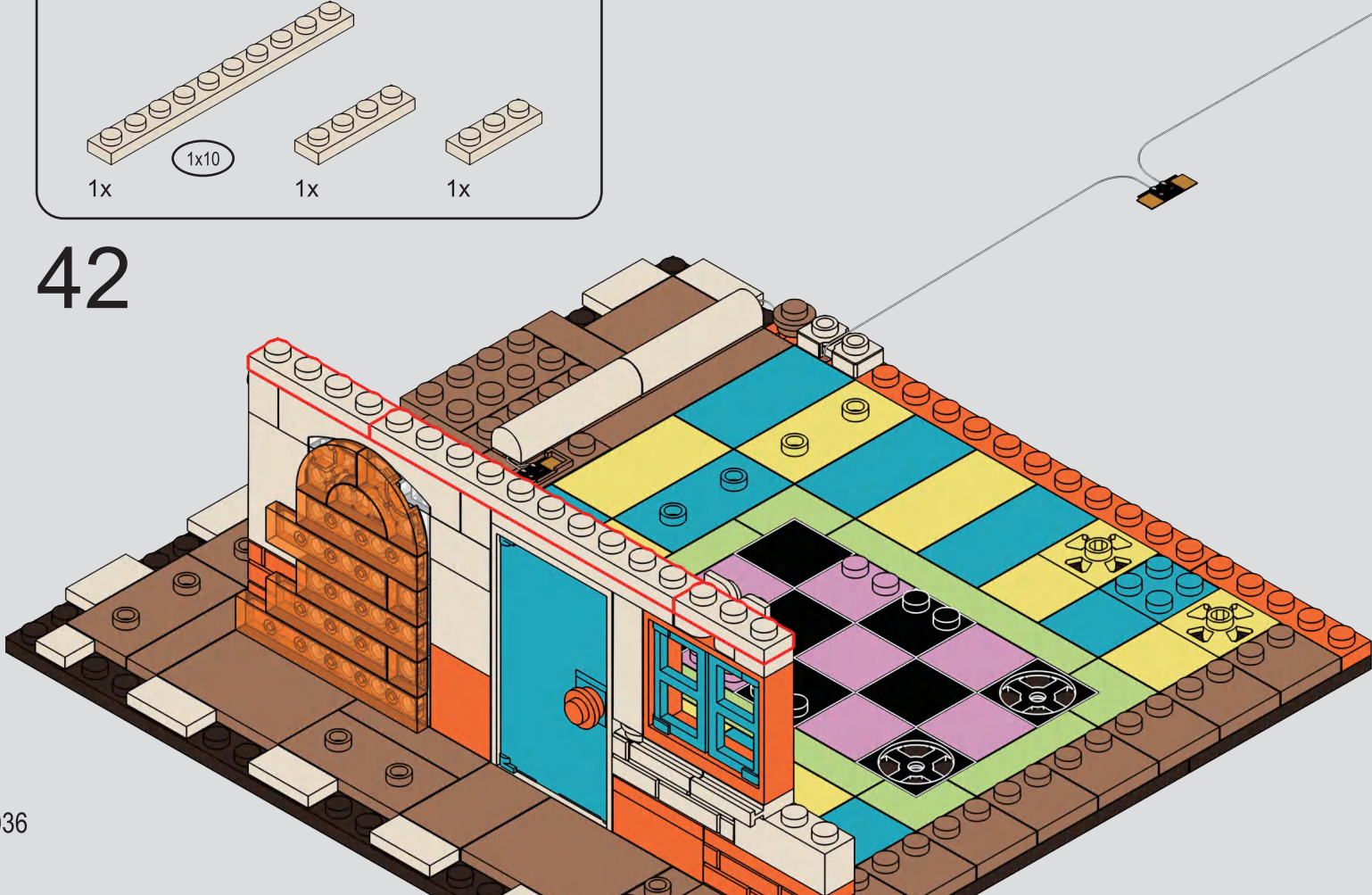

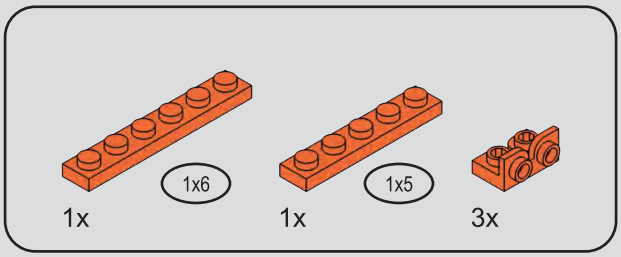


# 43

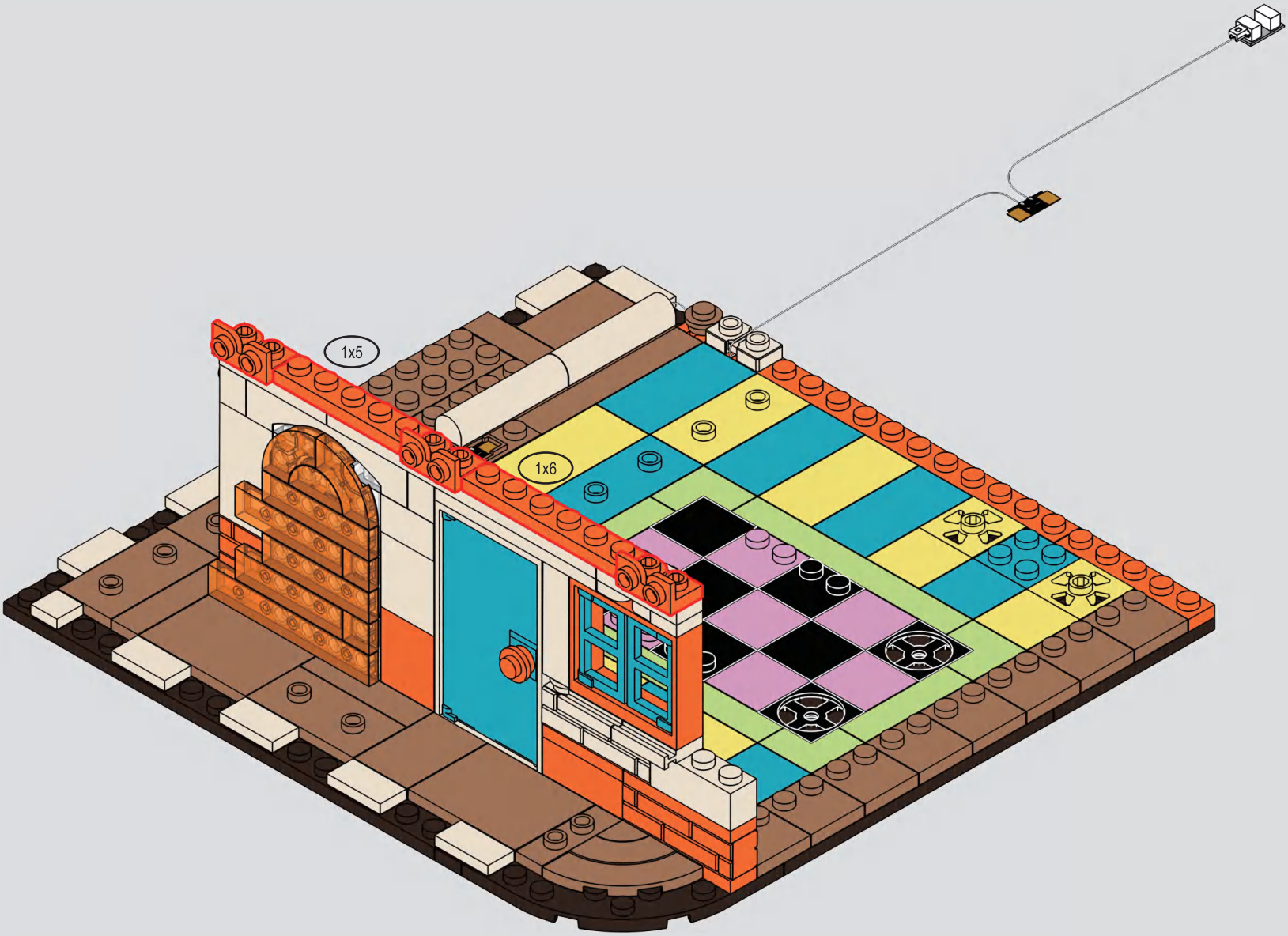

8 1:1

# 44

1

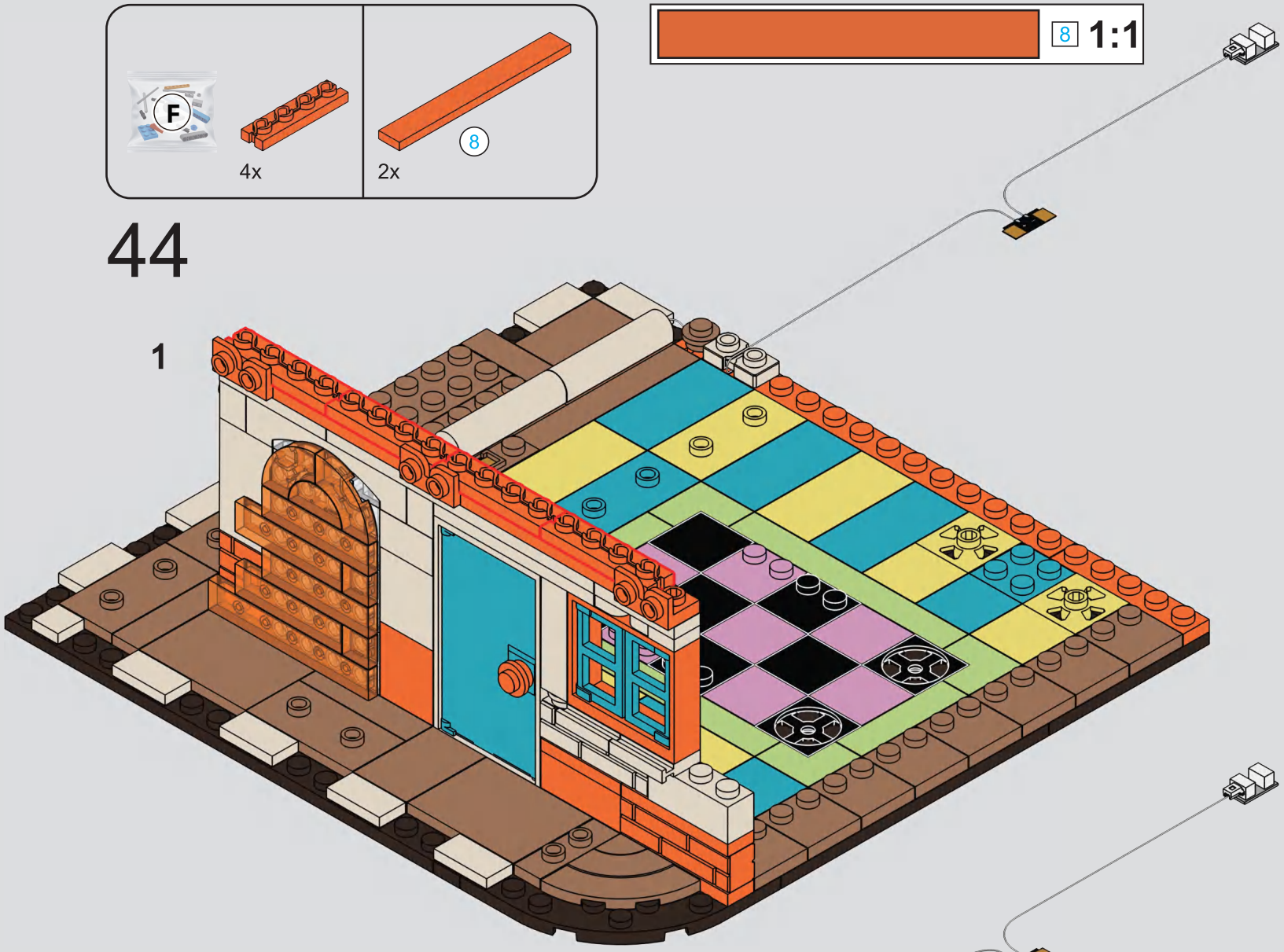

2

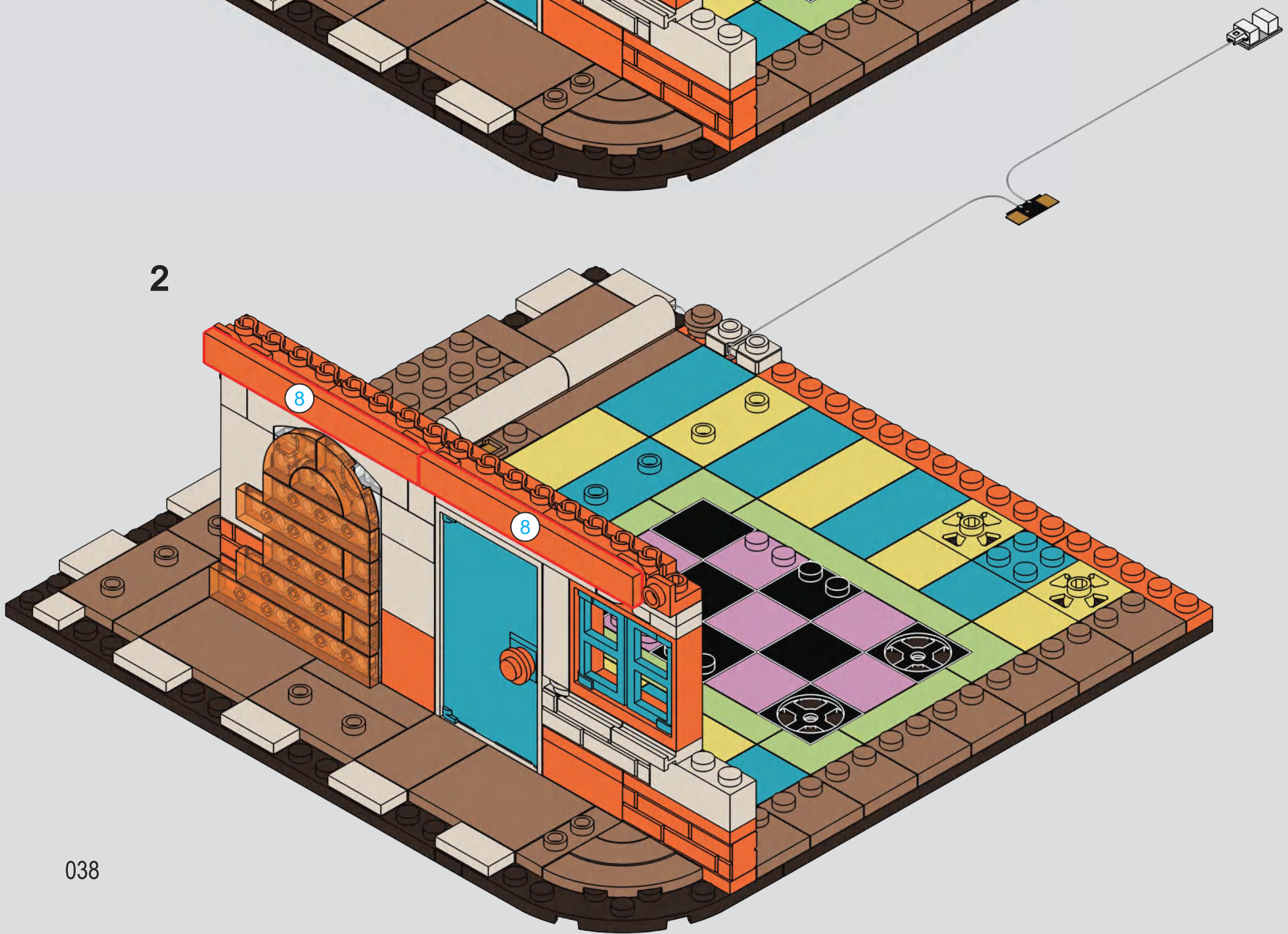

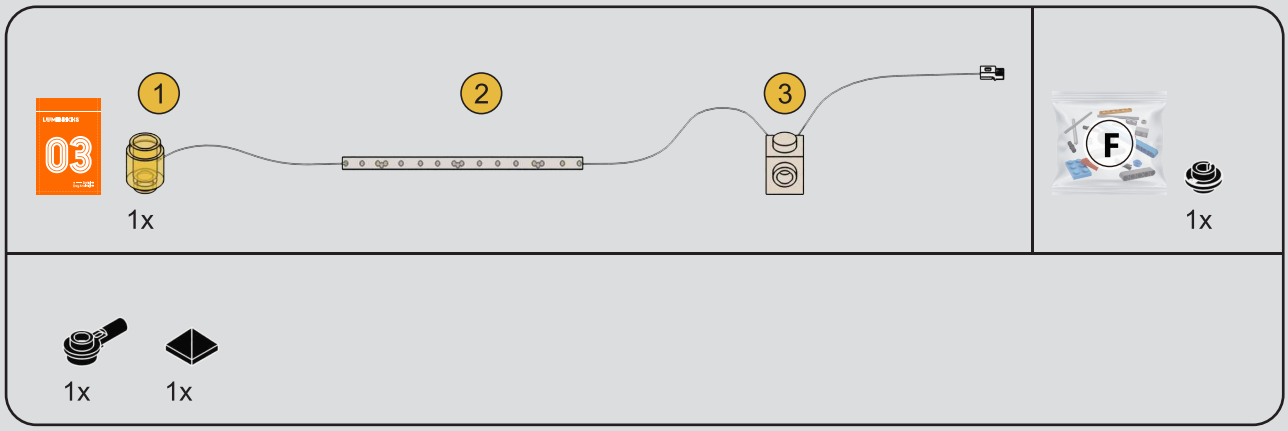


# 45

## 1

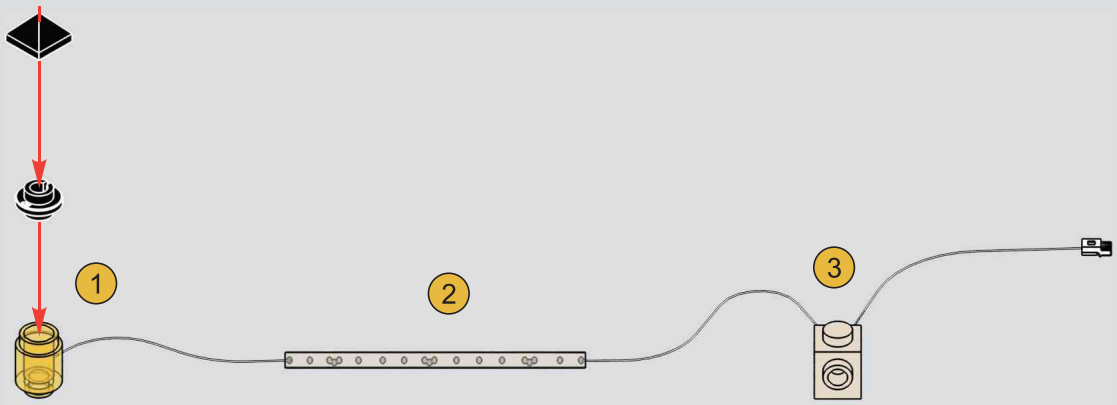


## 2

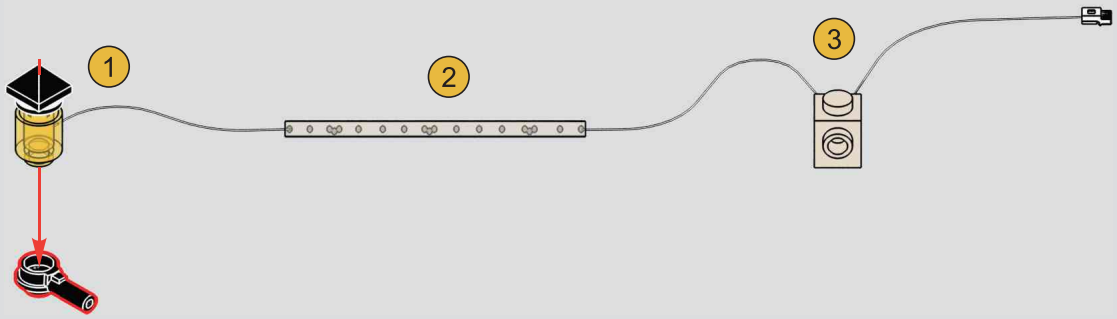

# 46

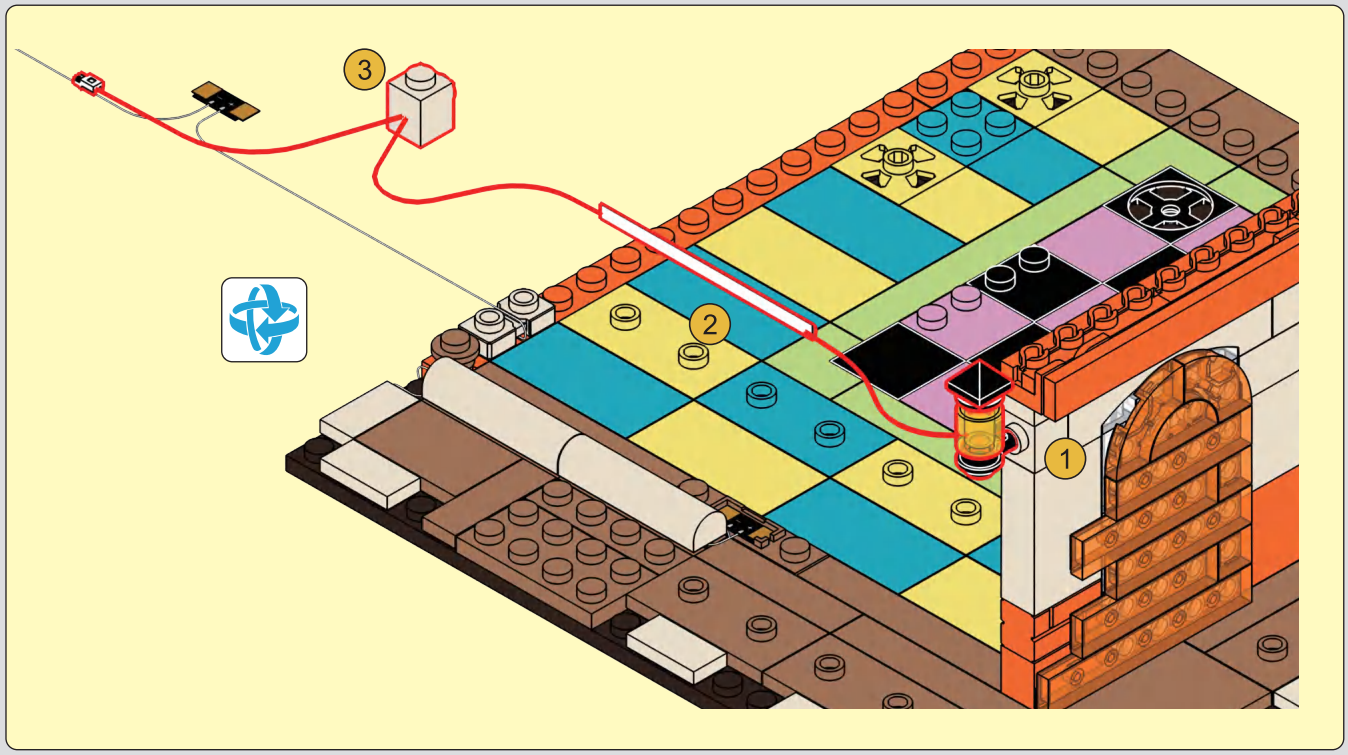


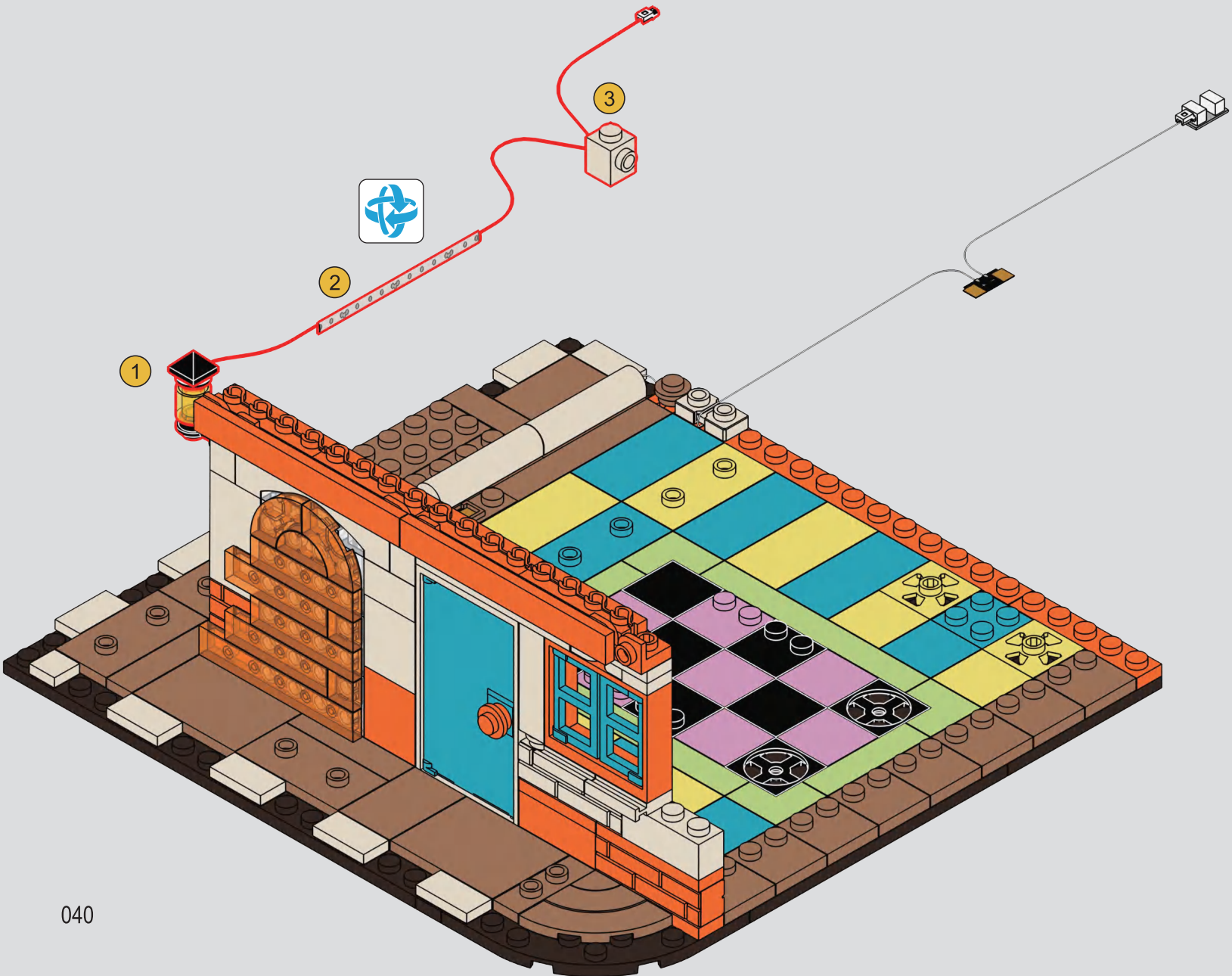

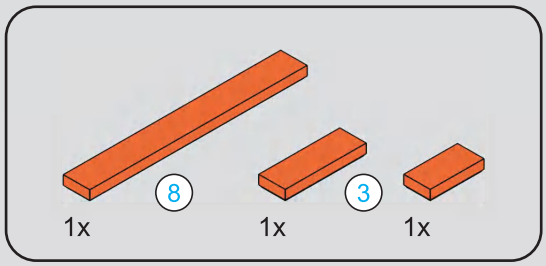


# 47

1

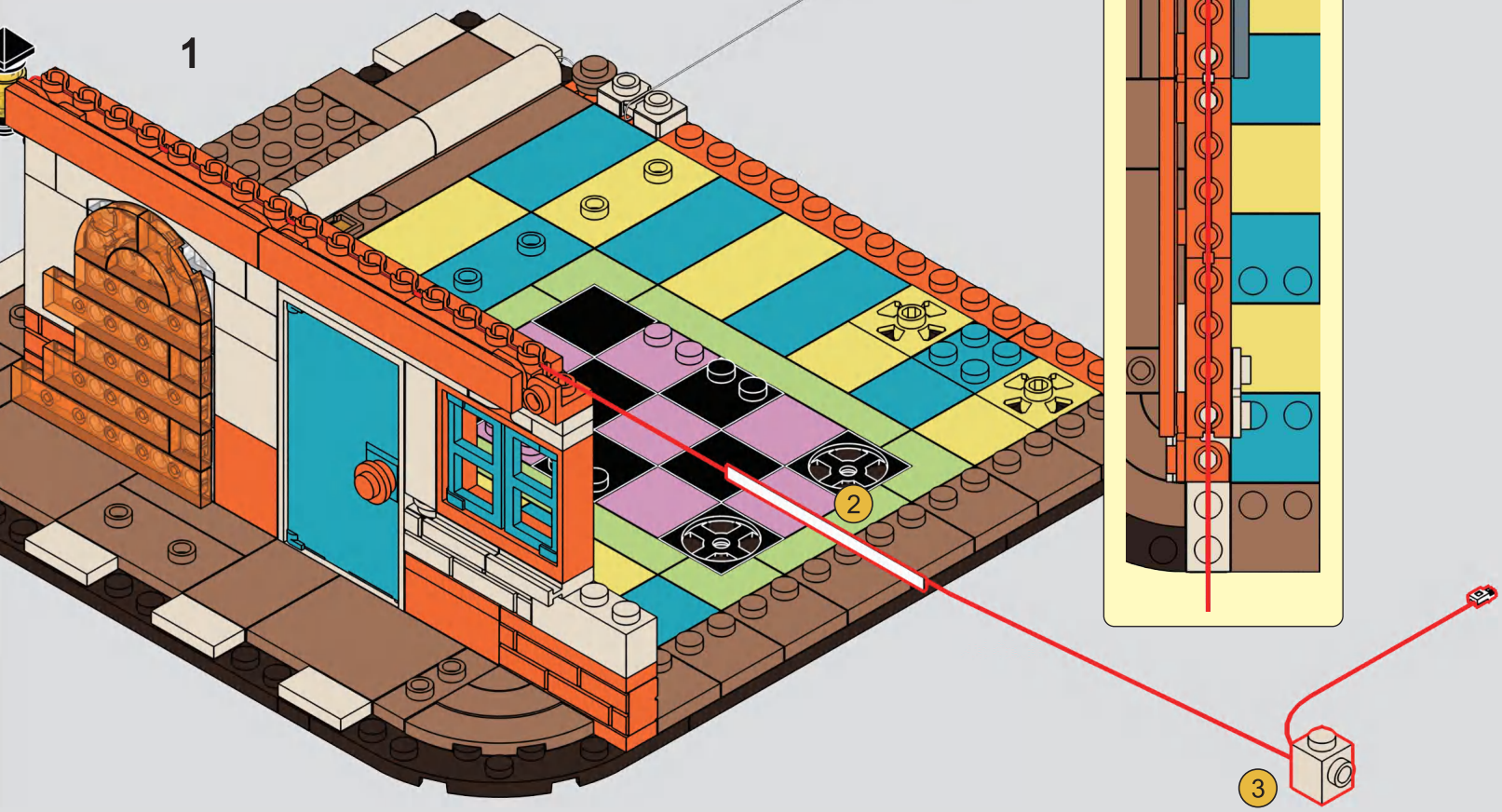


2

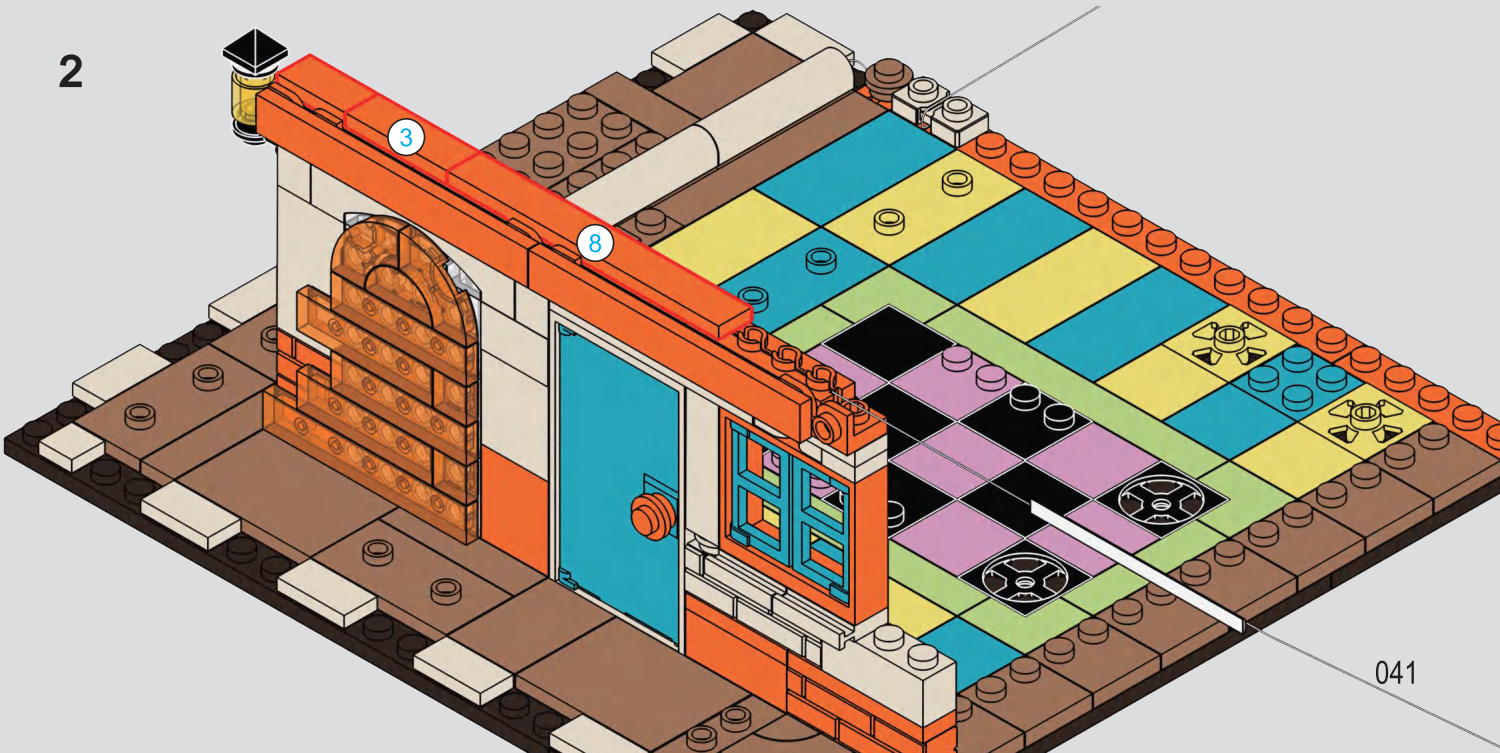

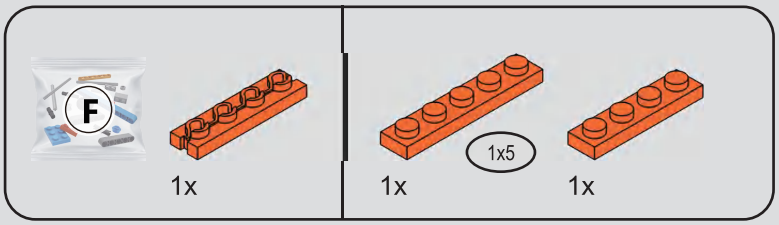


# 48

# 49

1

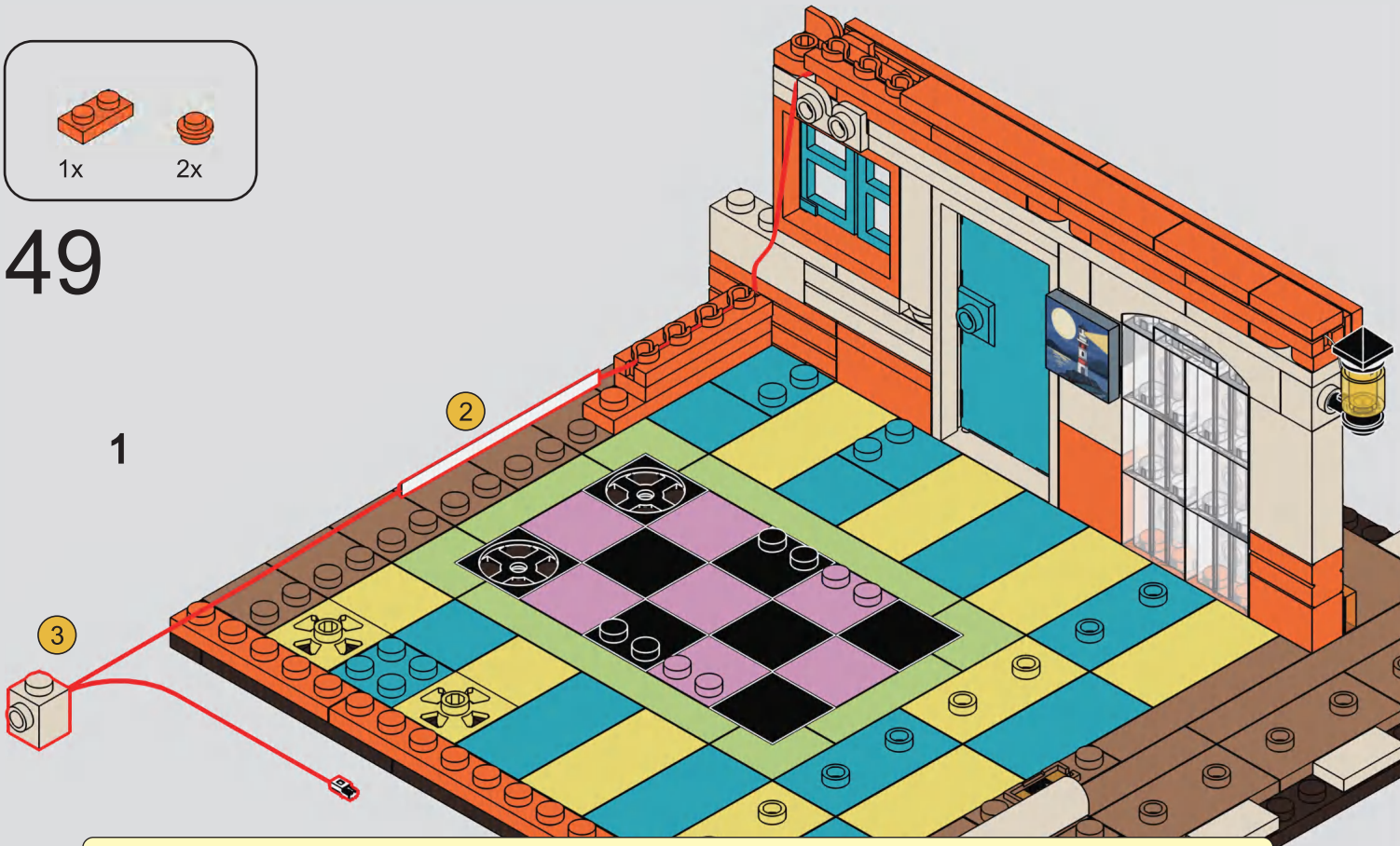


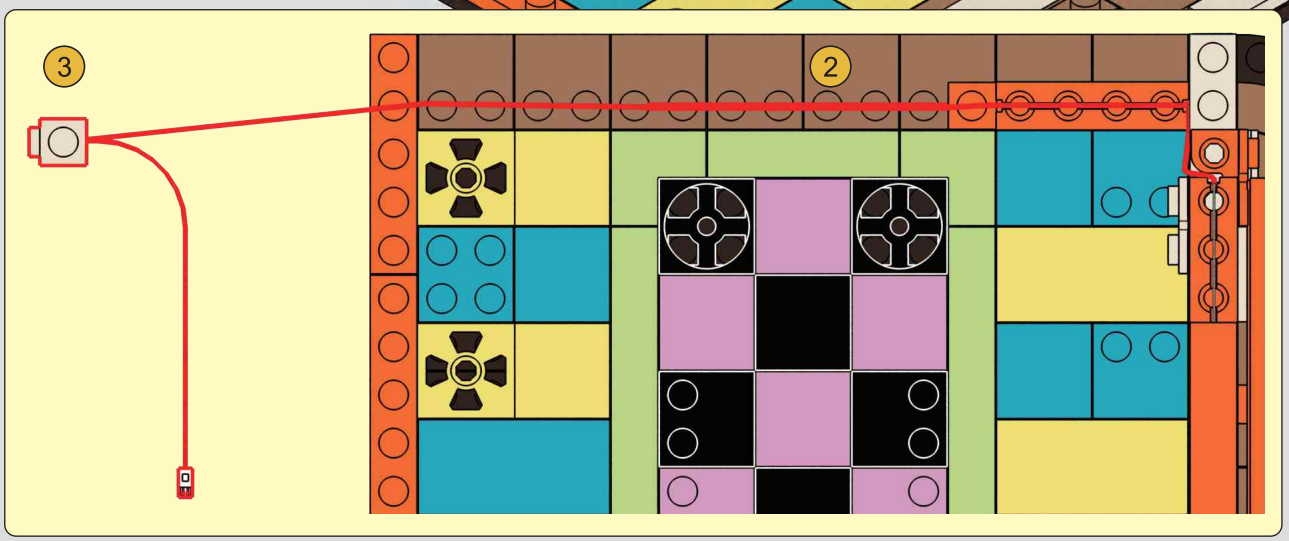


2

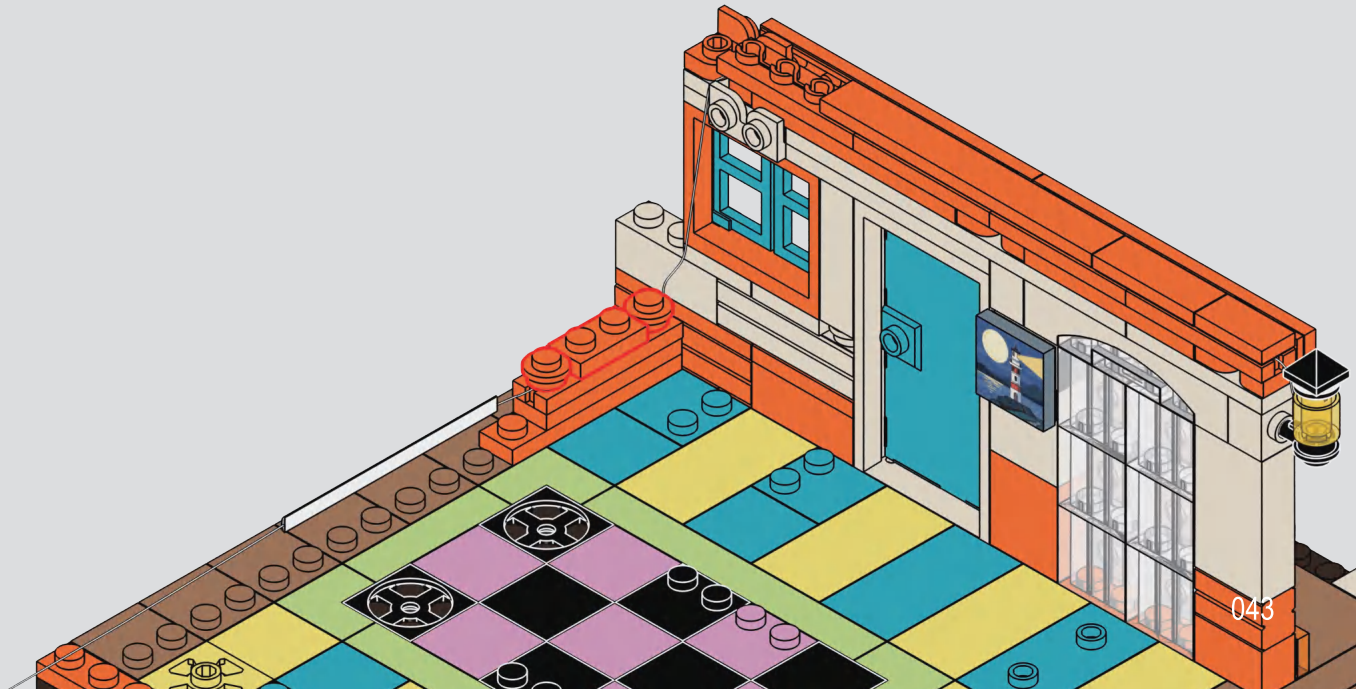

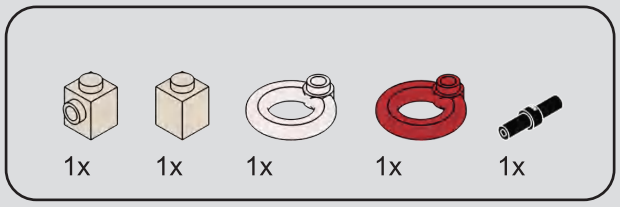


# 50

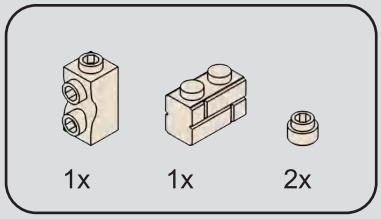


# 51

1

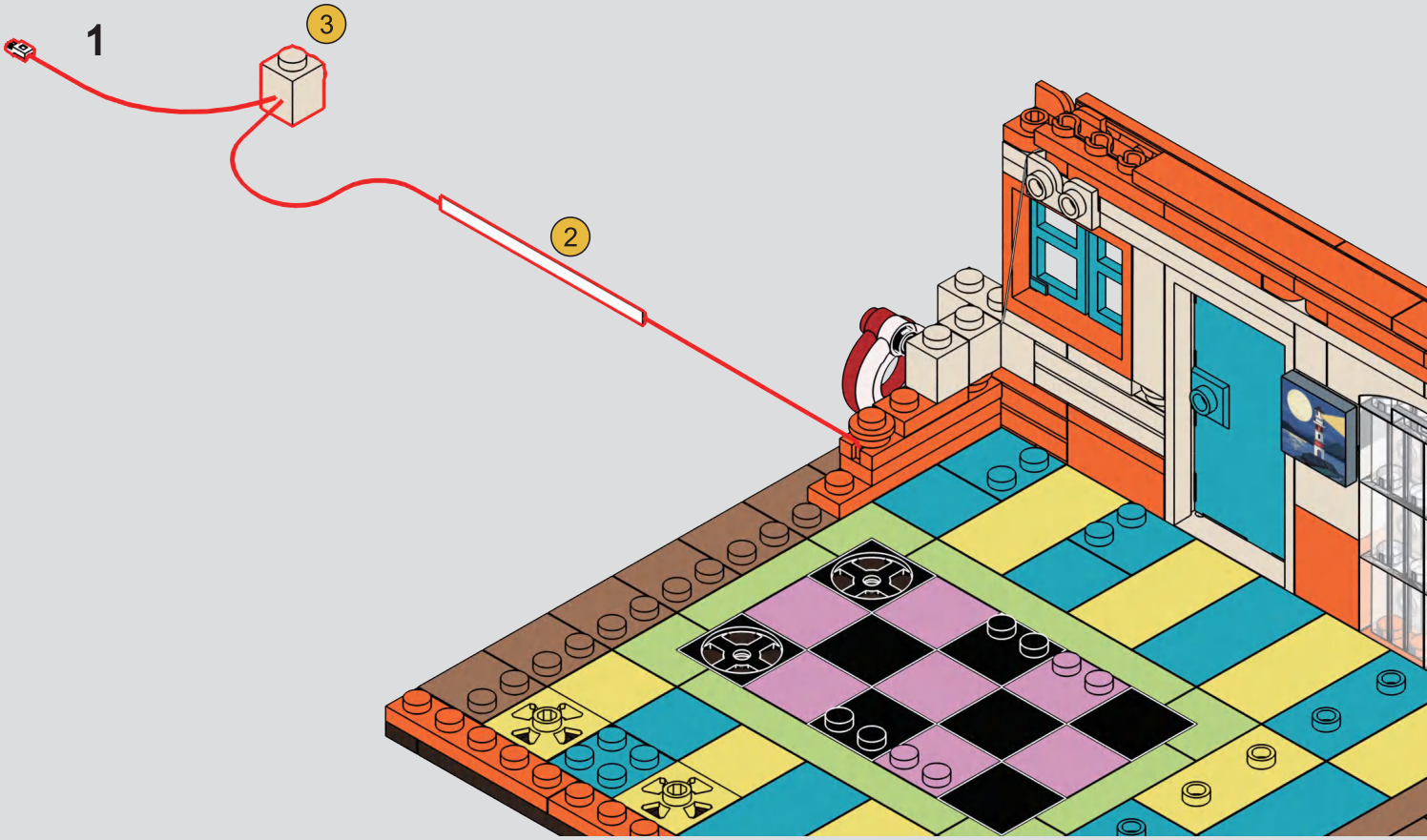


2

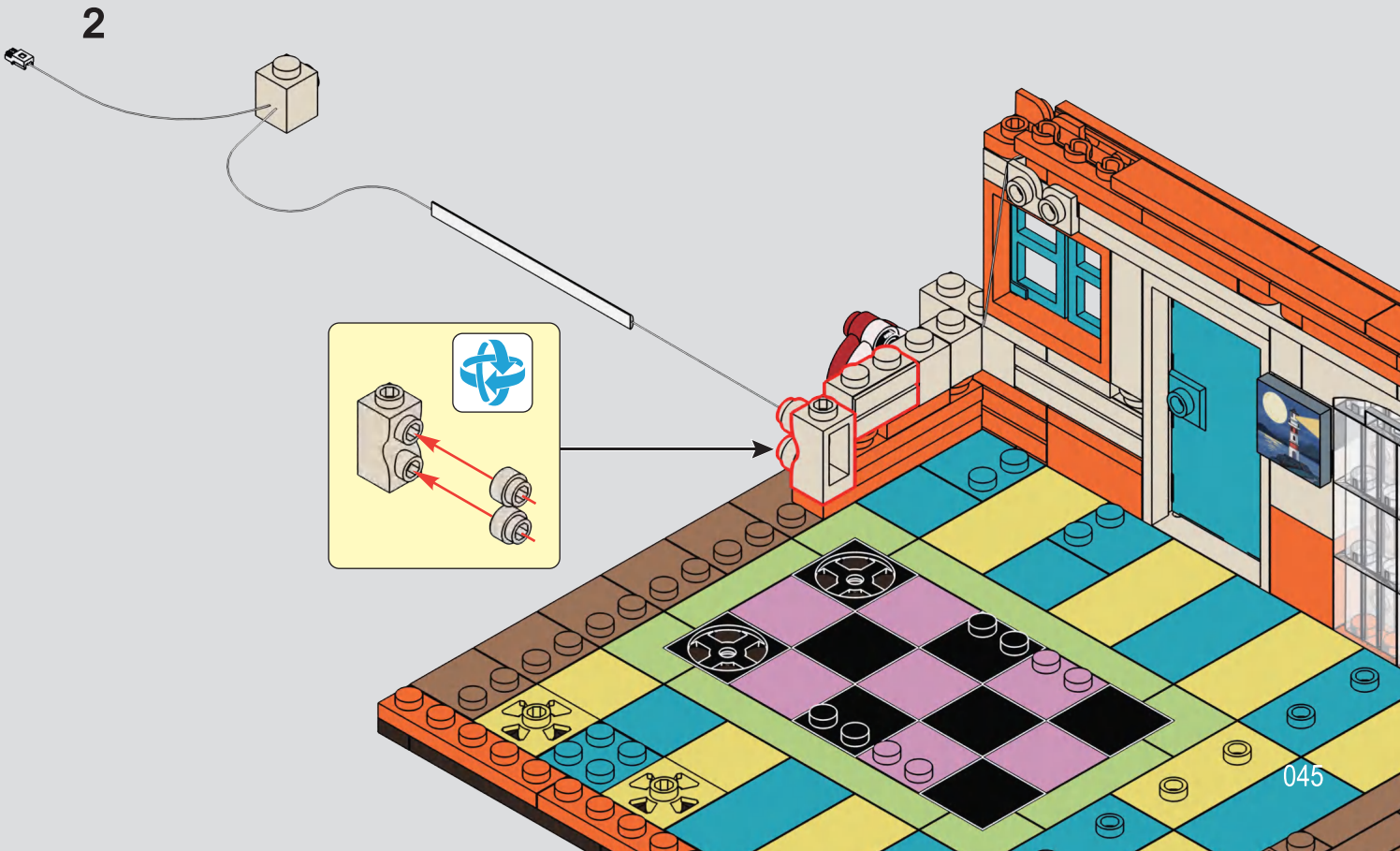

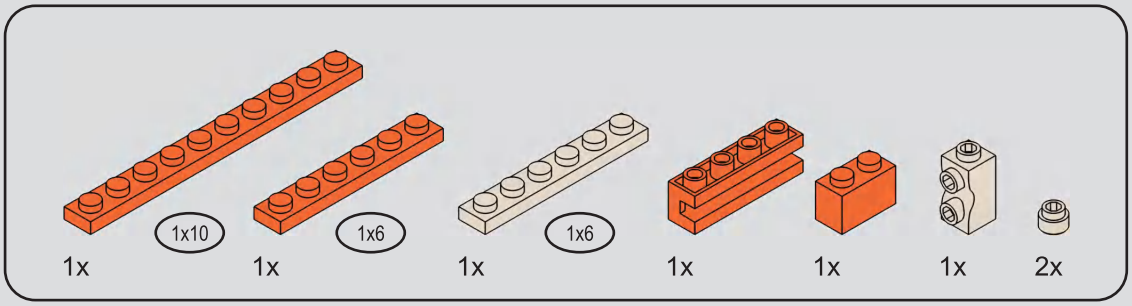


# 52

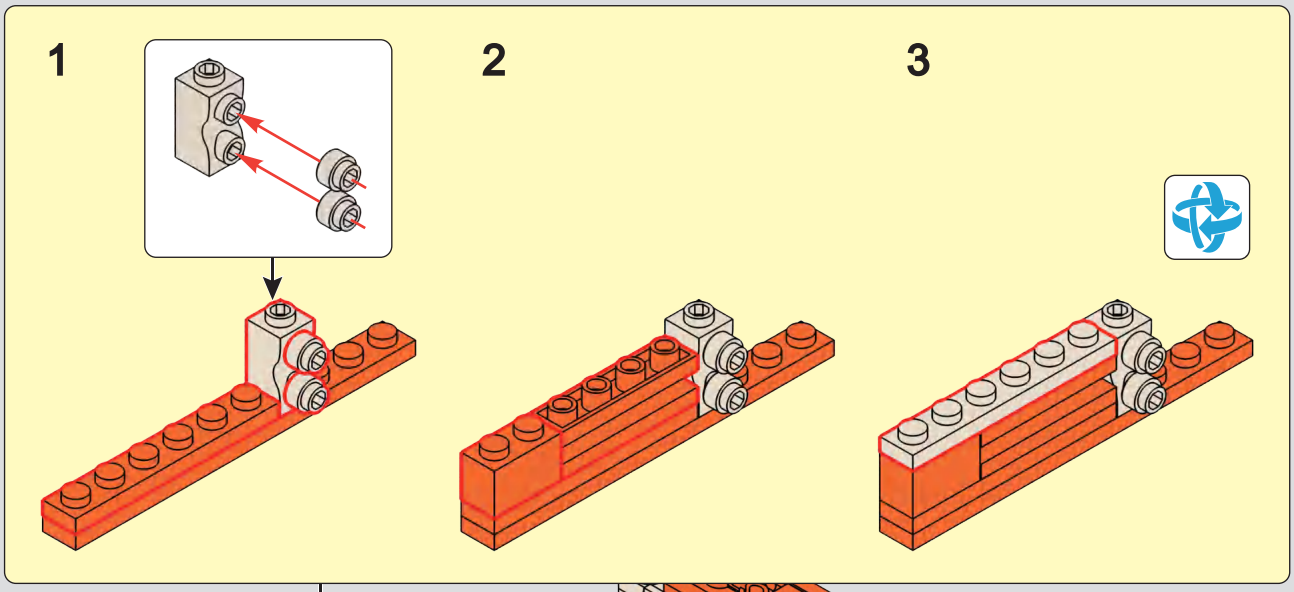


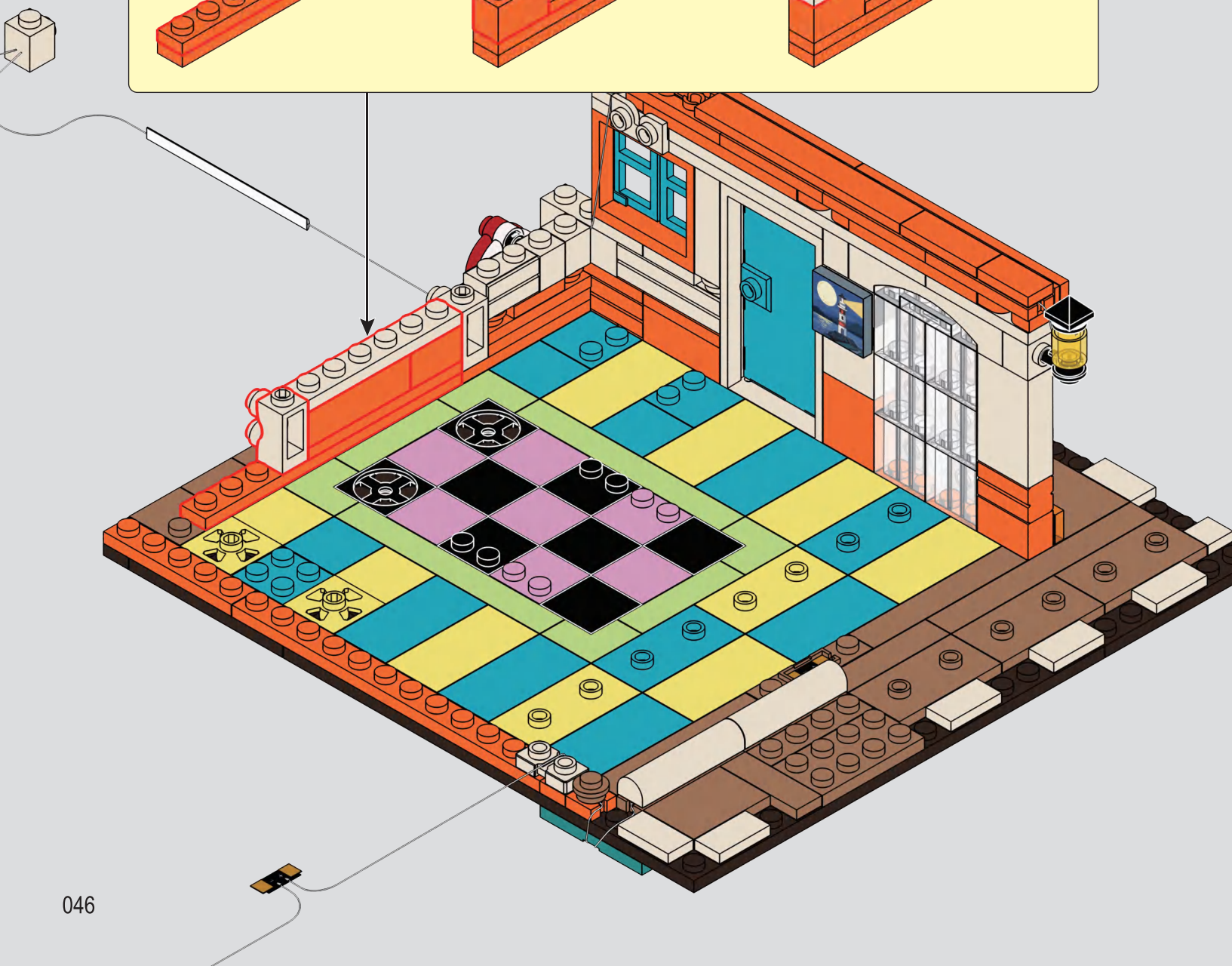

# 53

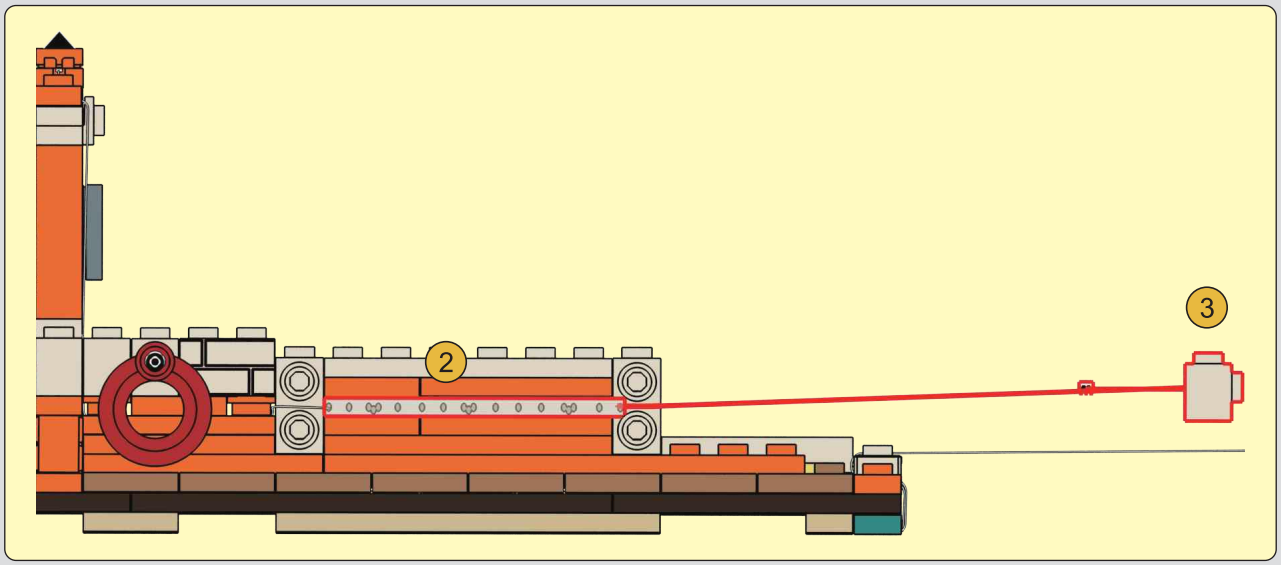


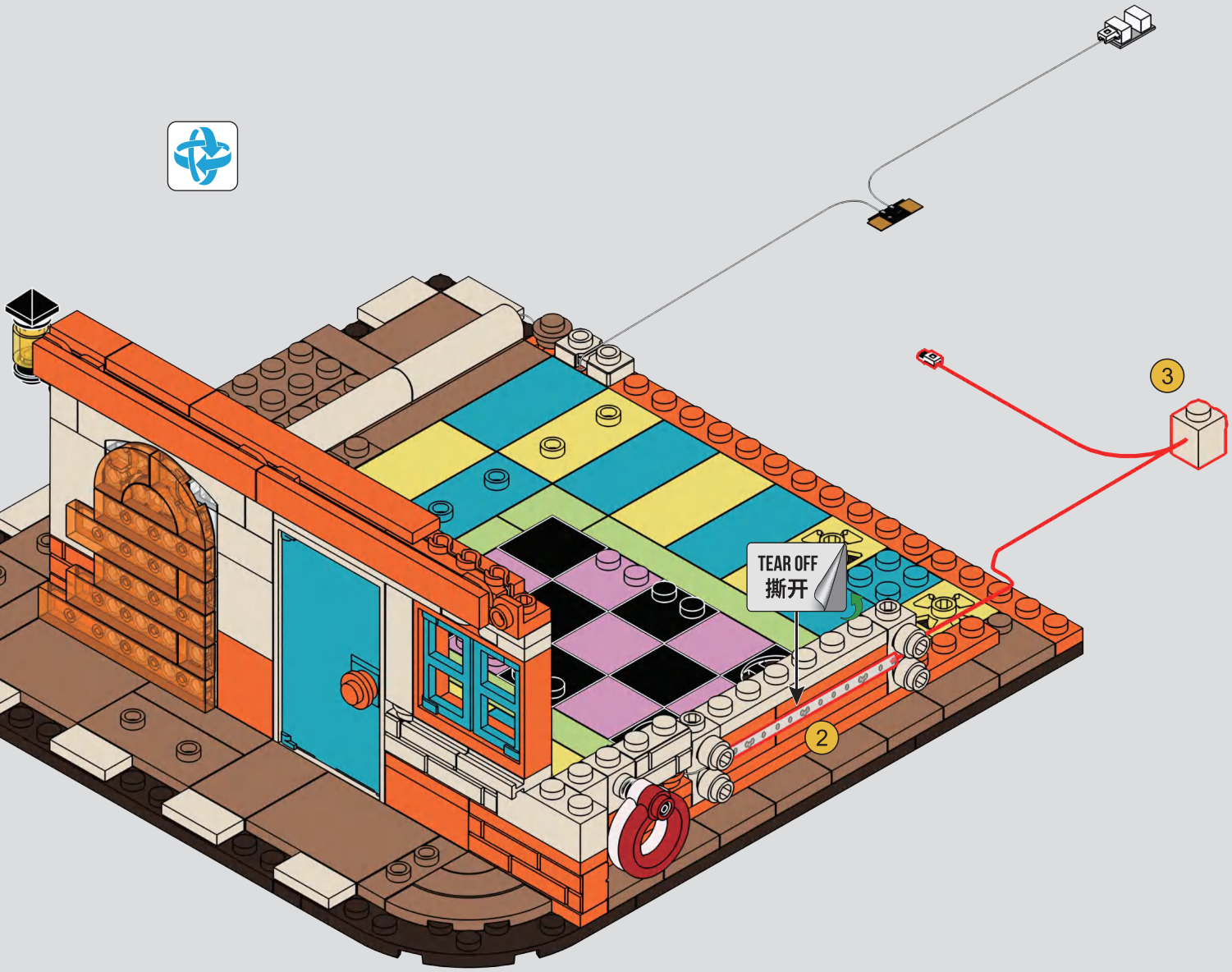

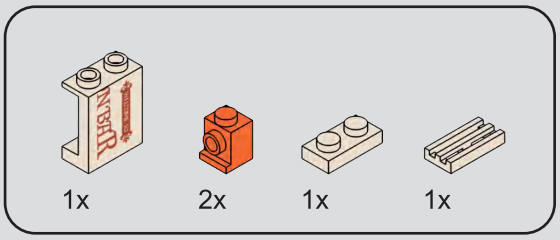


# 54

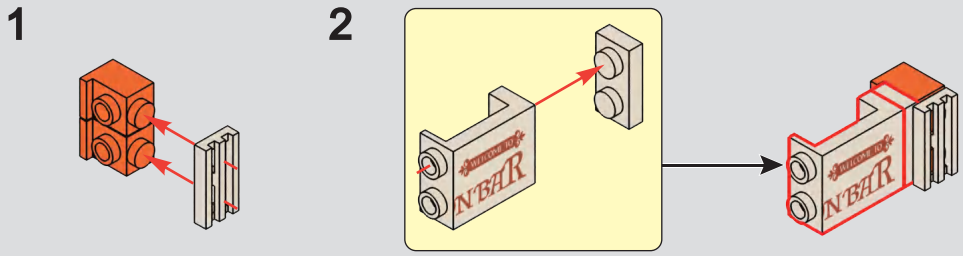


---

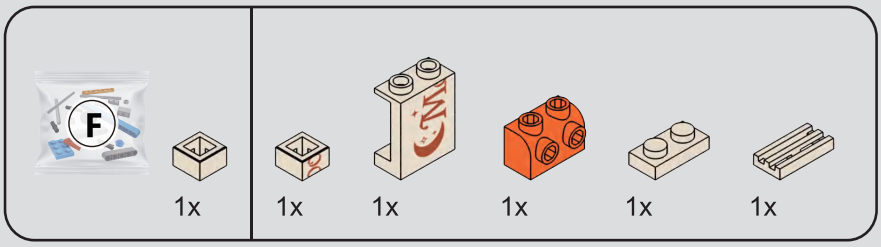


# 55

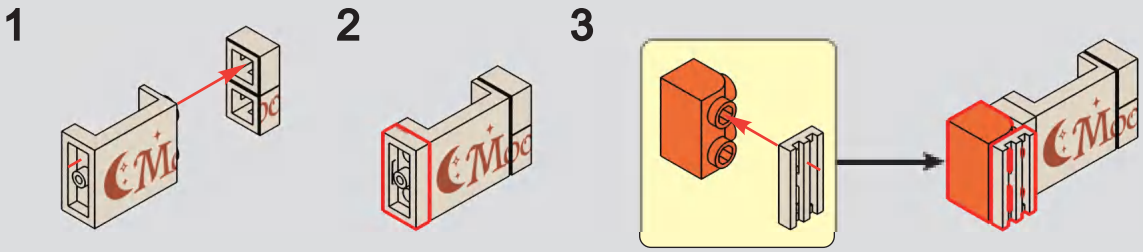


---

# 56

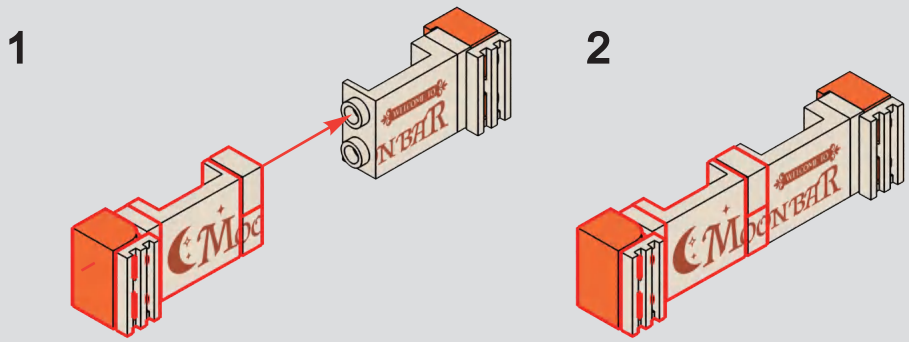

# 57

1

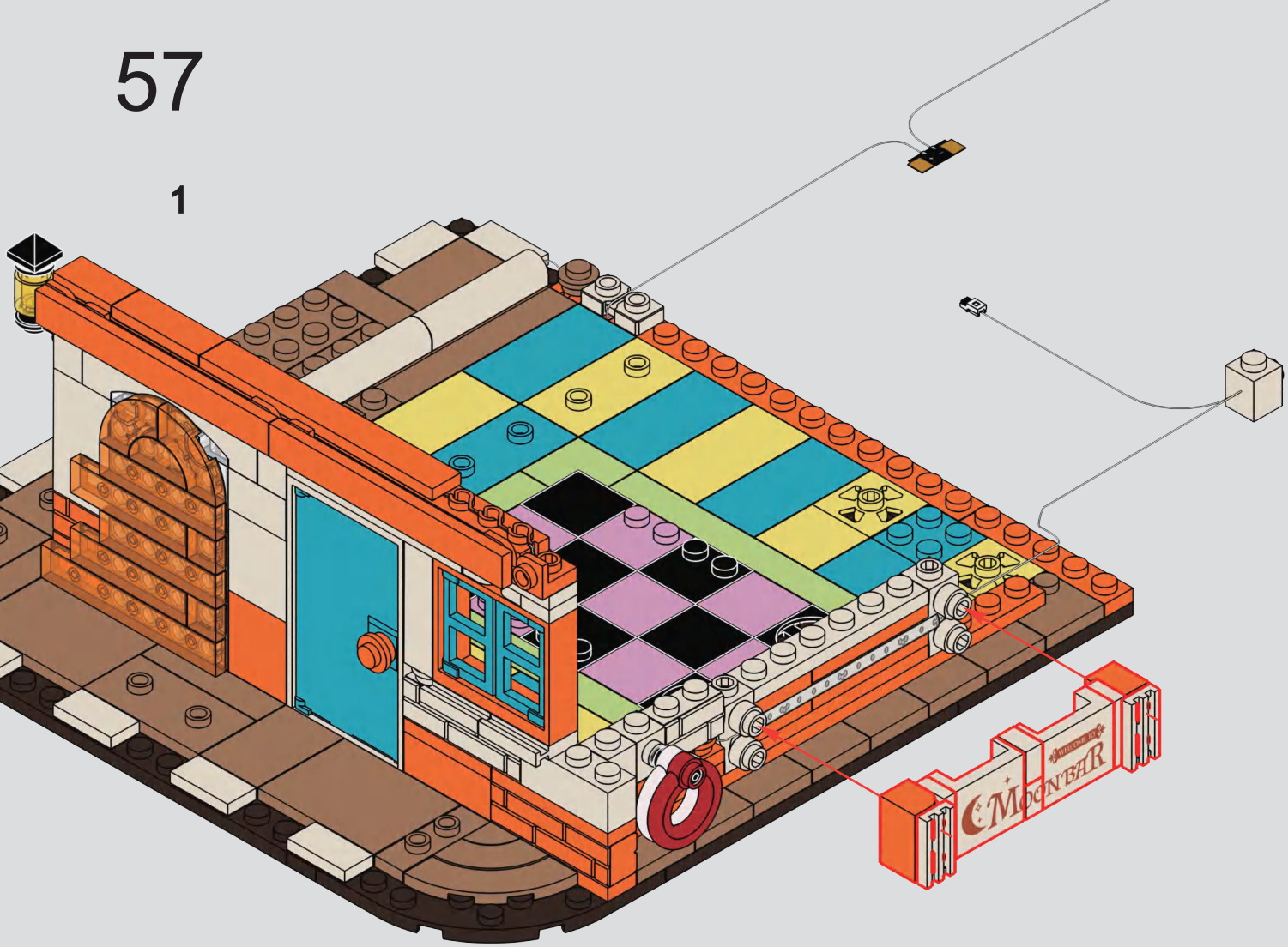


2

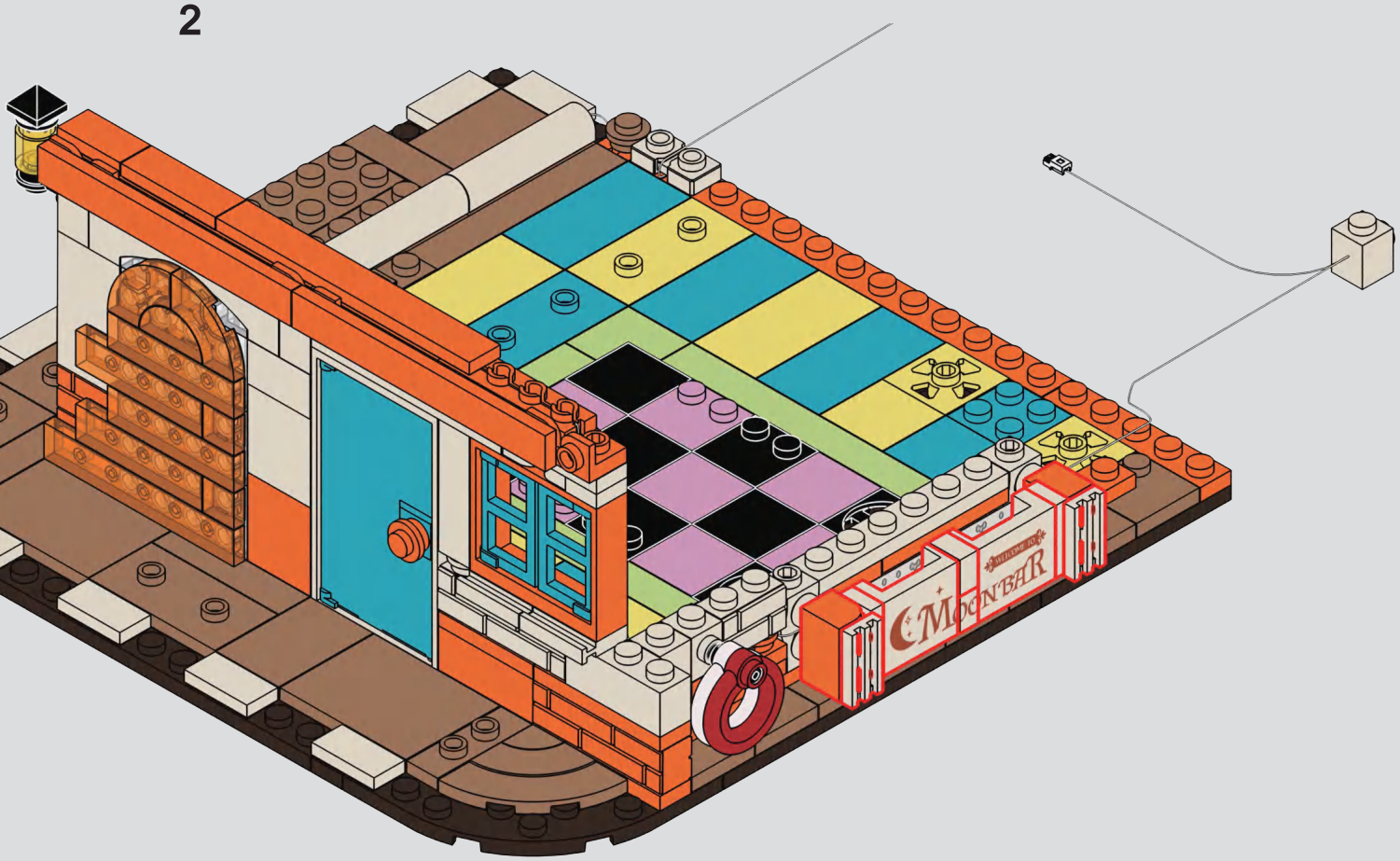

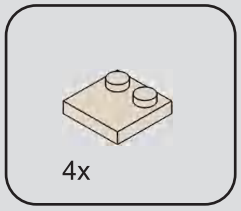


# 58

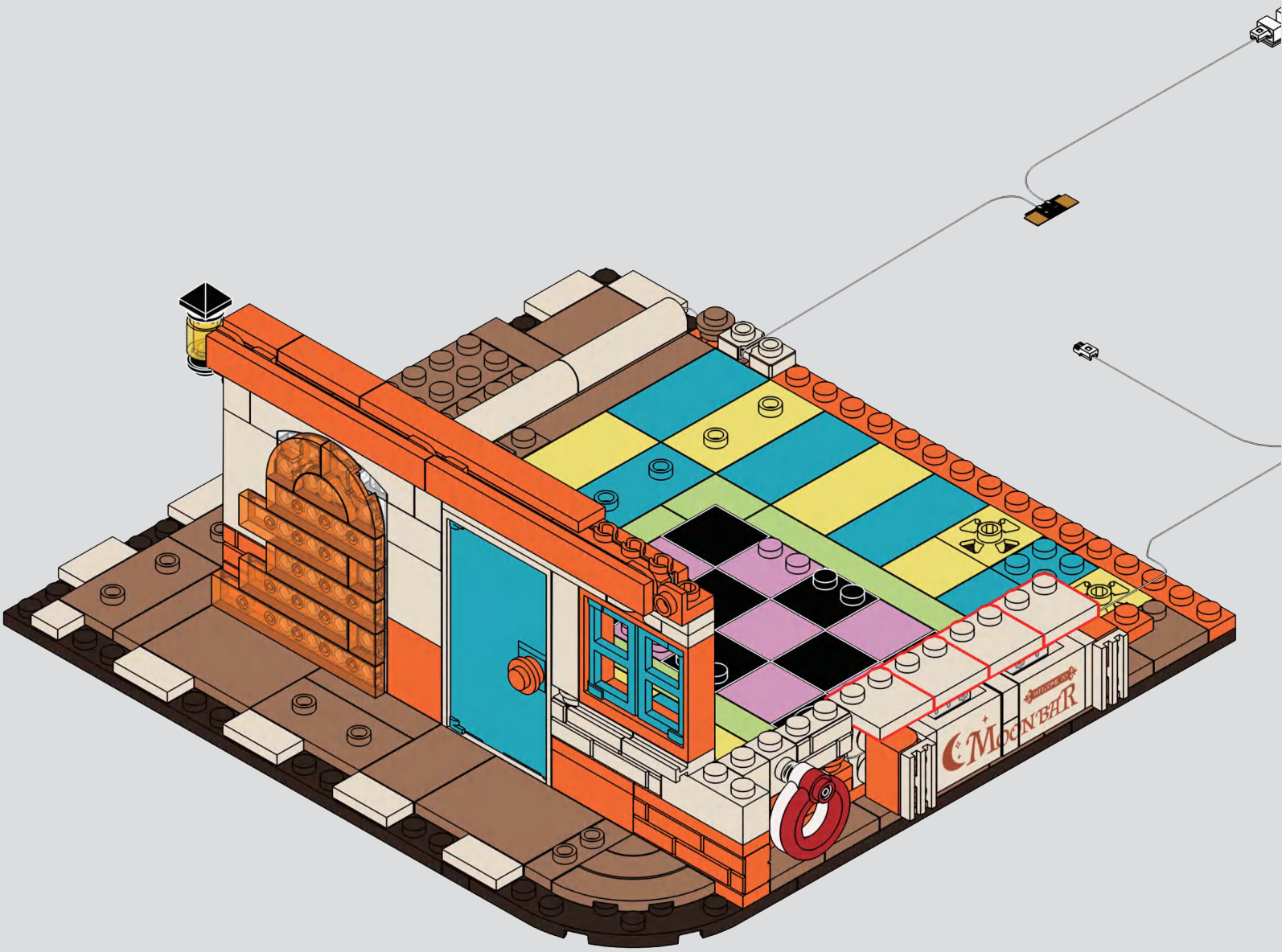

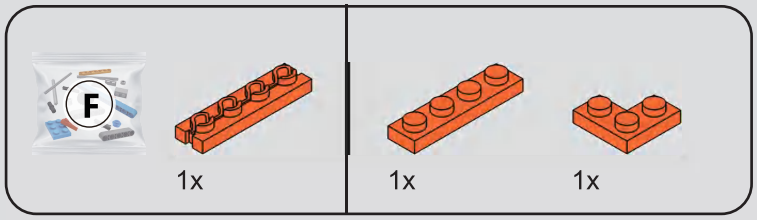


# 59

1

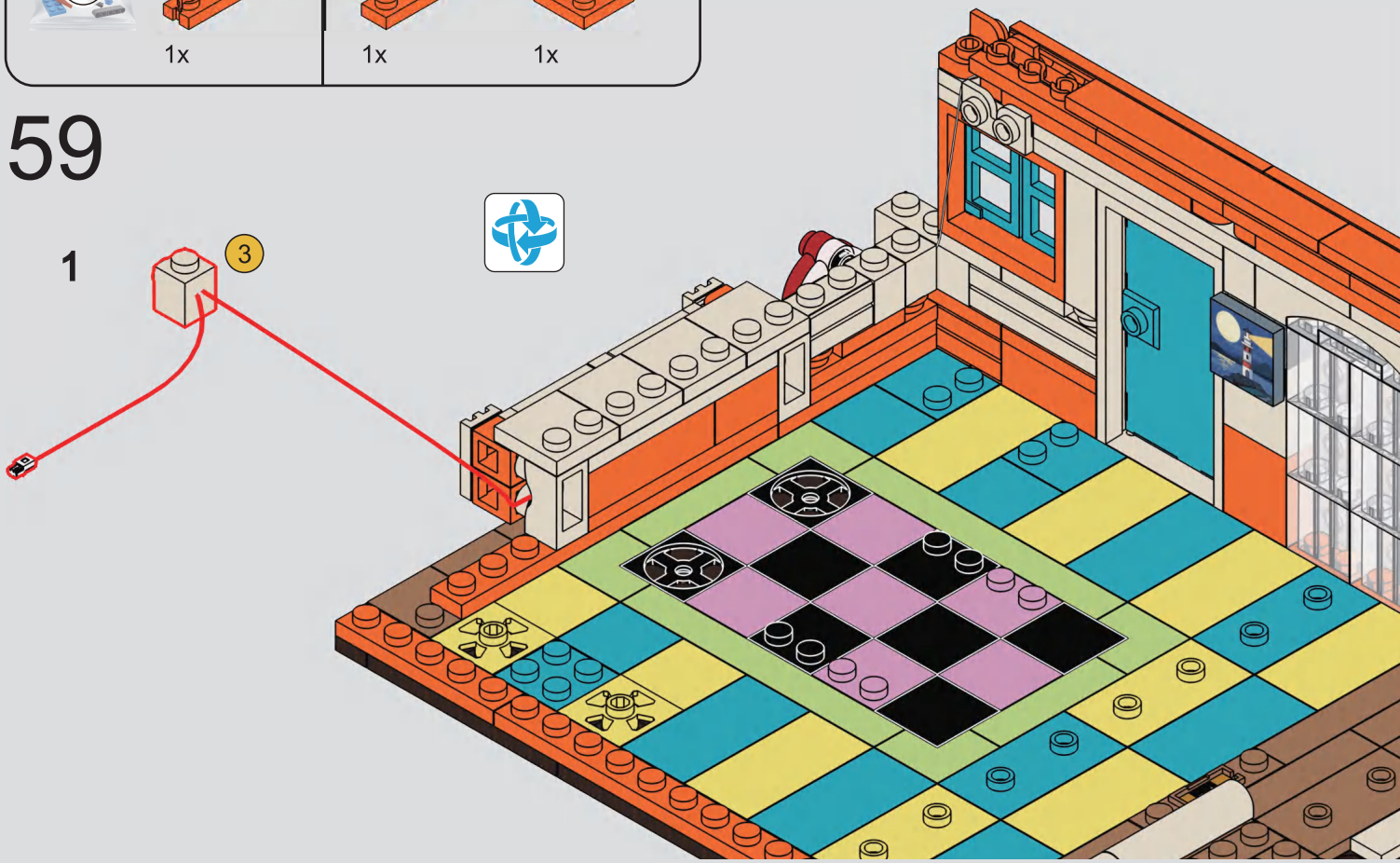


2

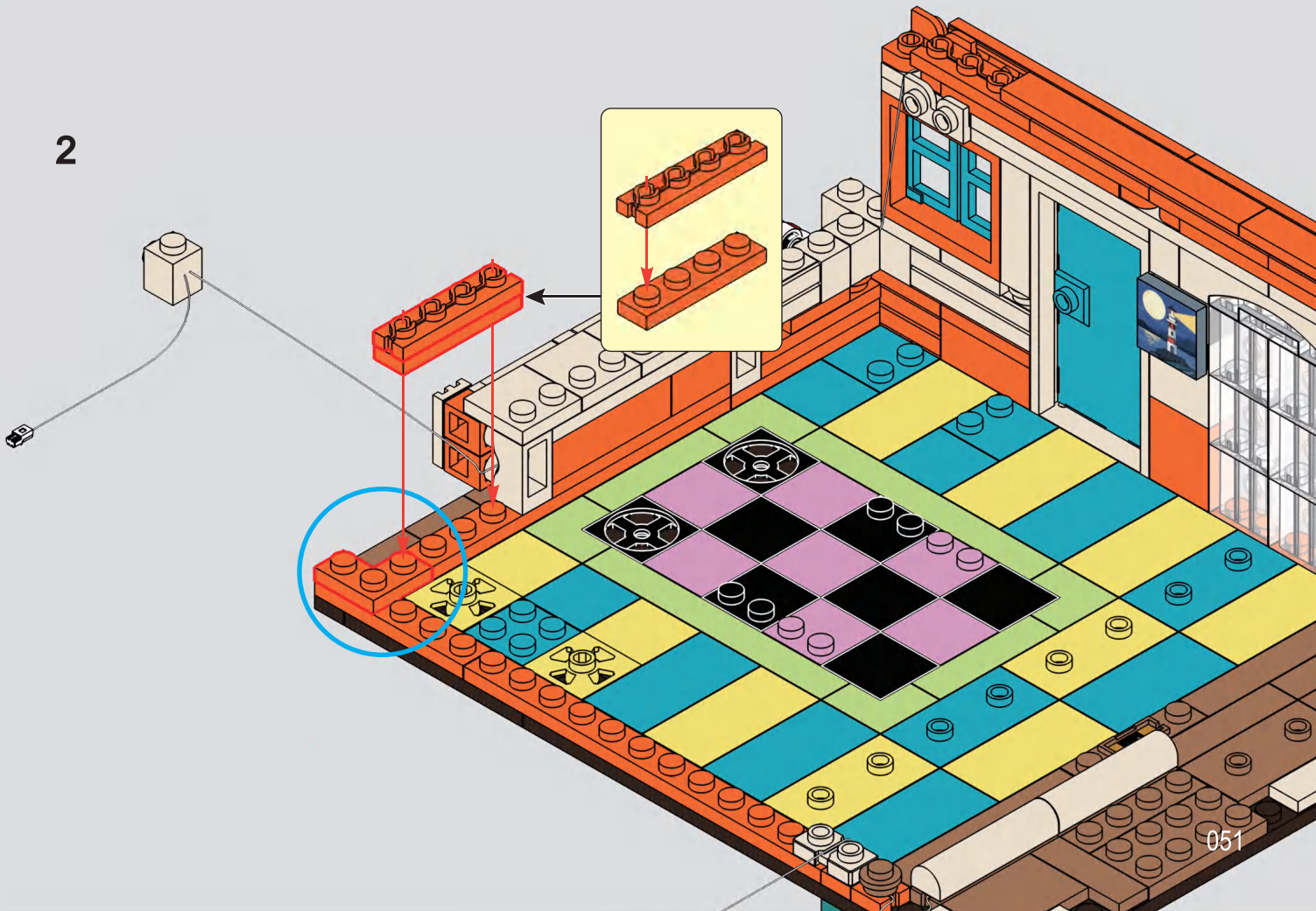

# 60

1

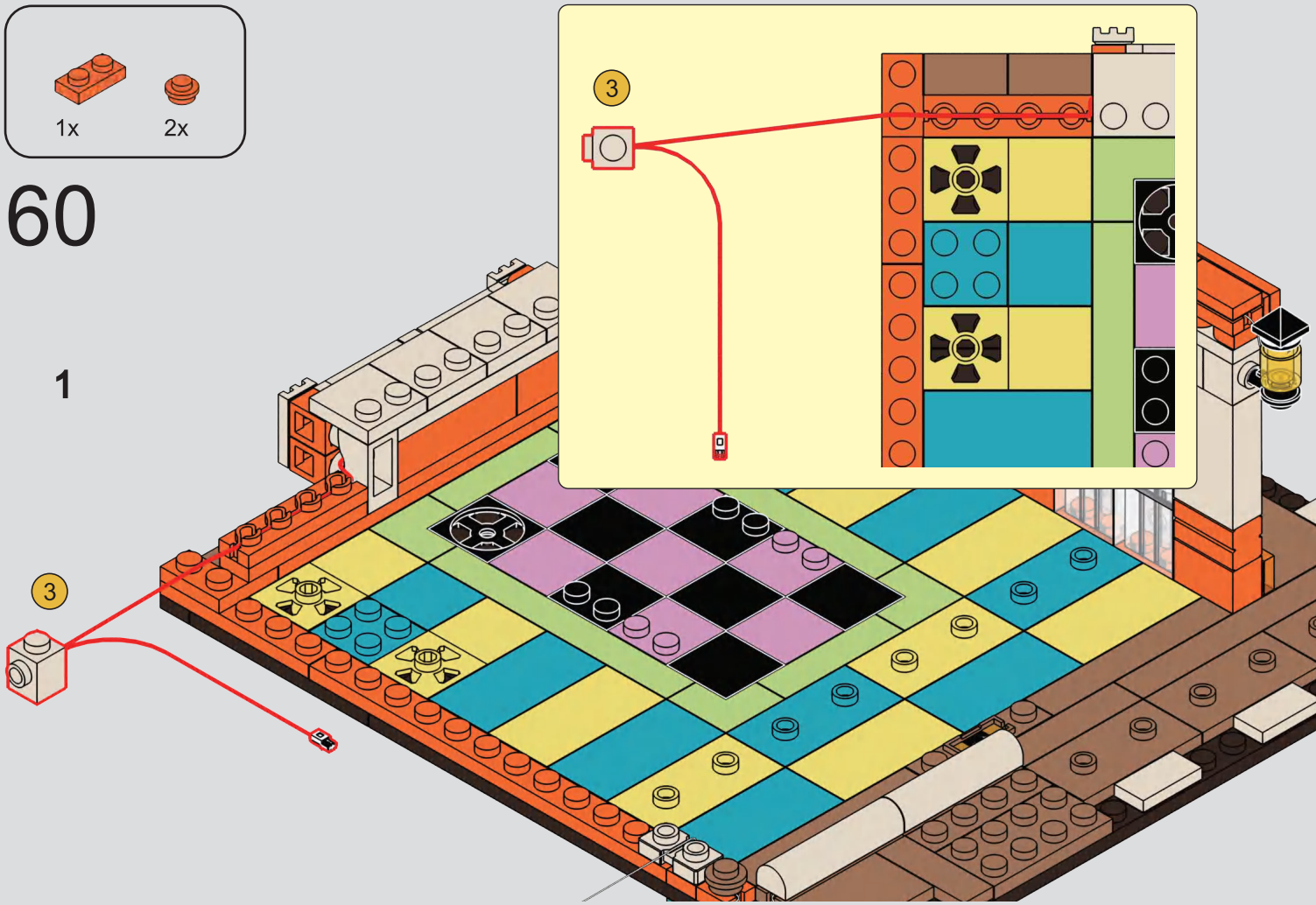


2

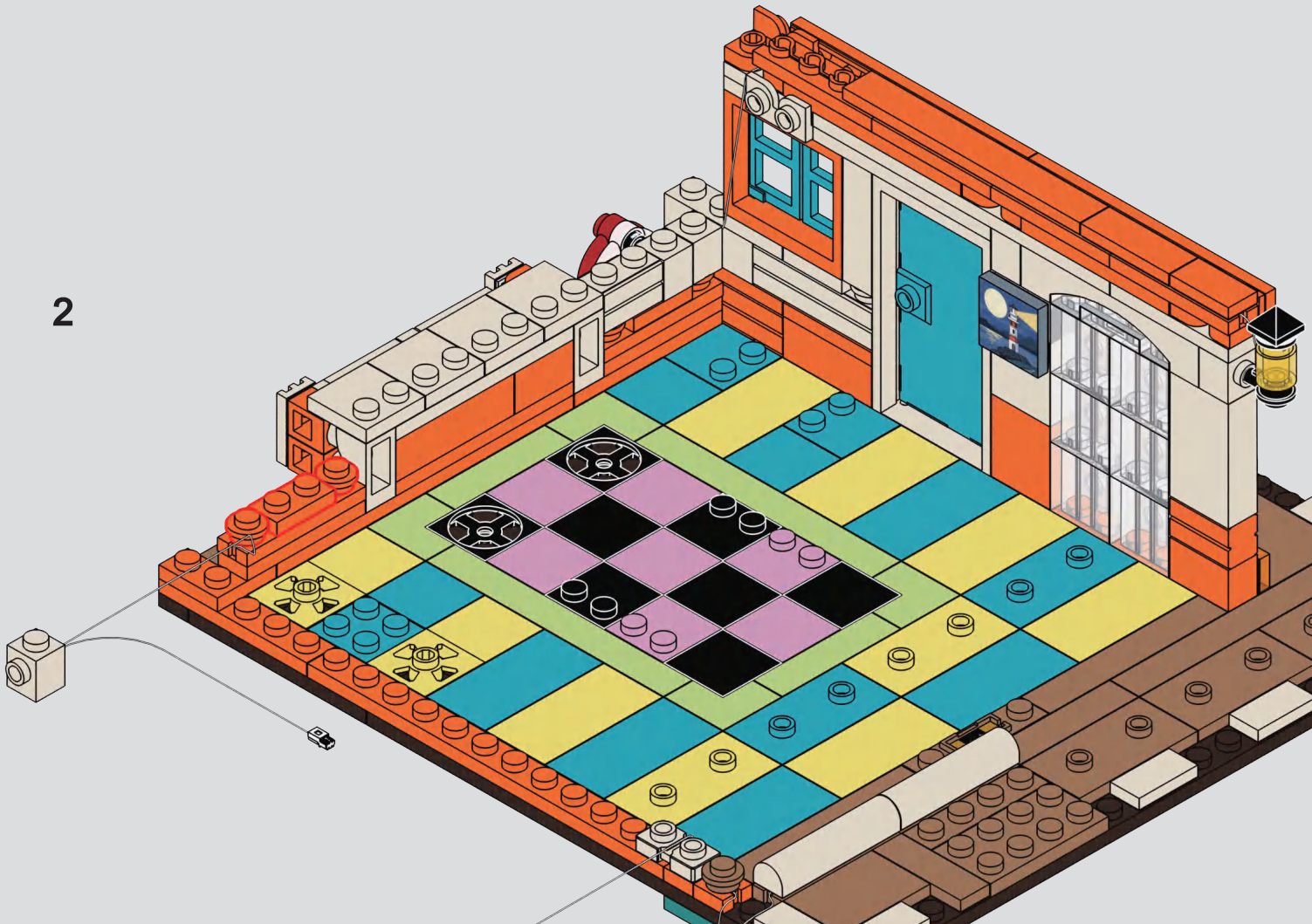

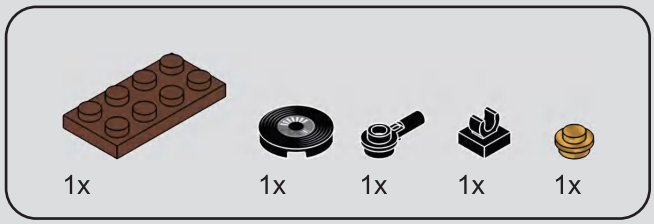


# 61

---

# 62

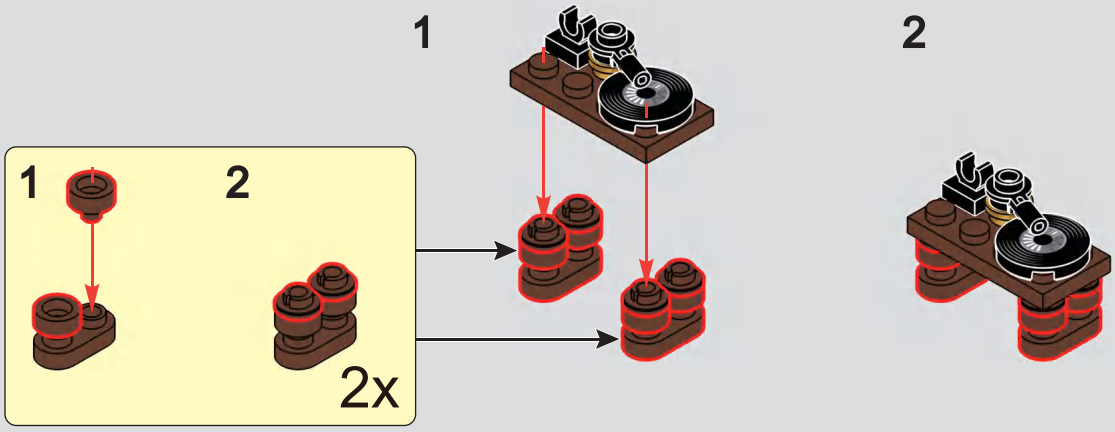

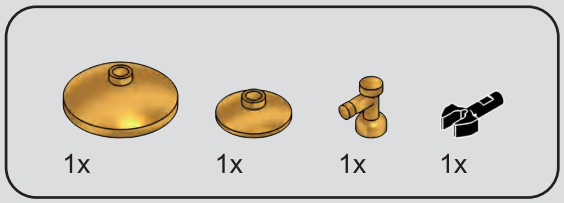


63

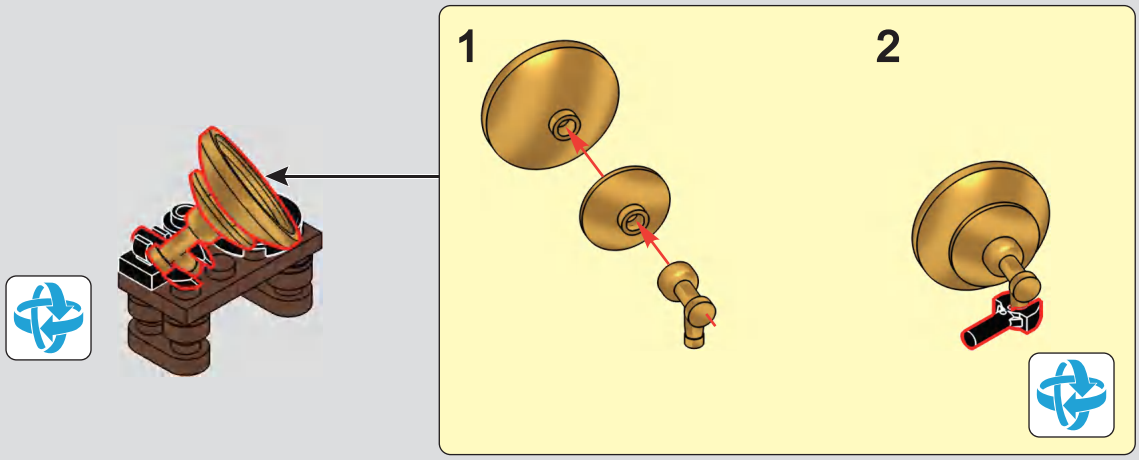


64

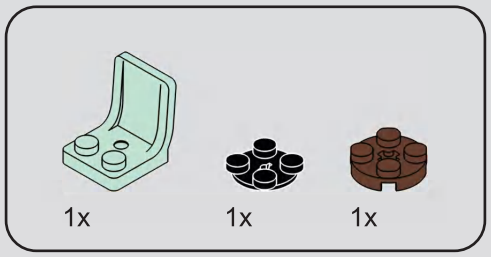


# 65

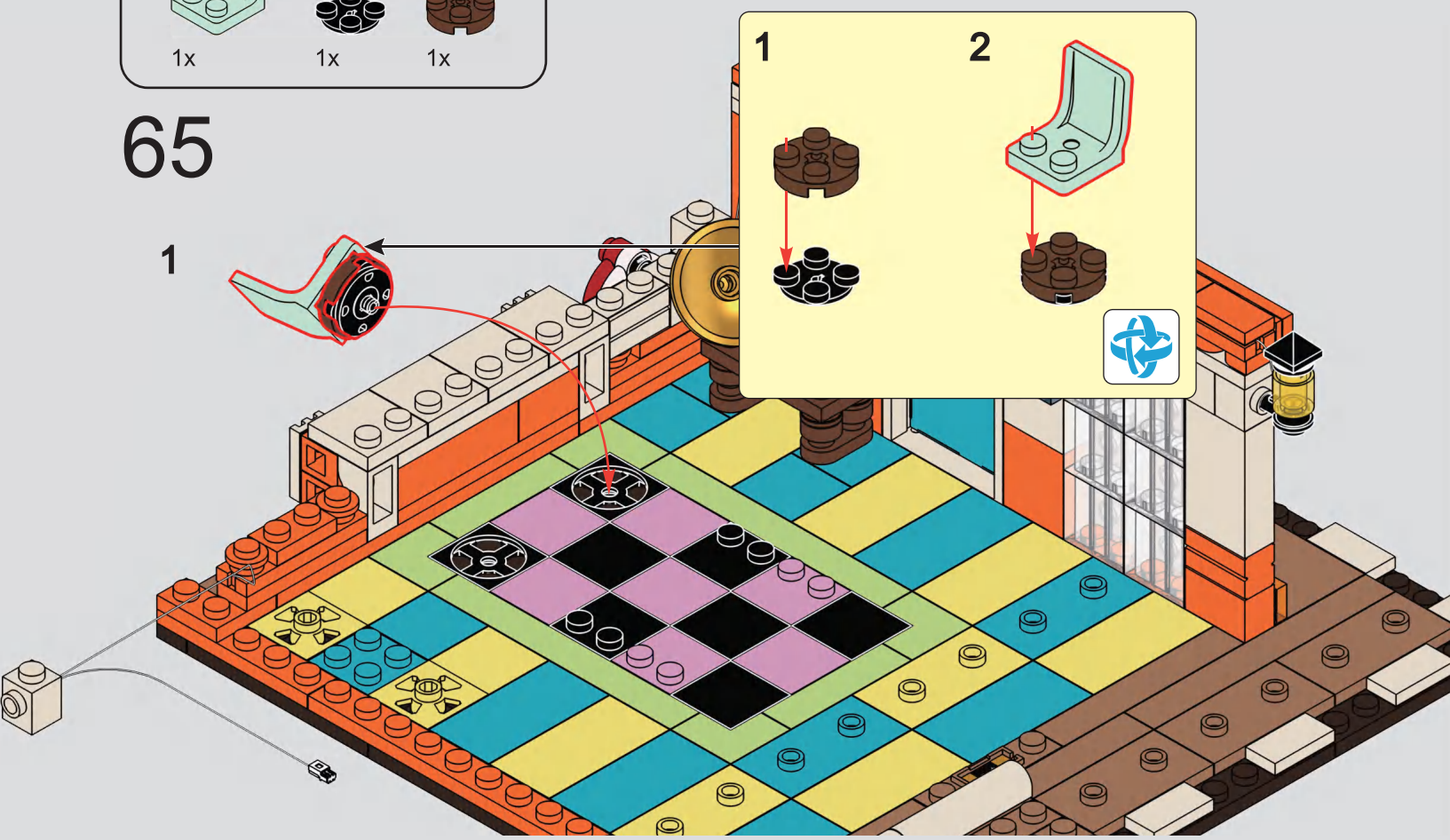

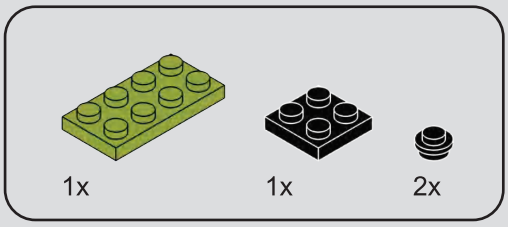


# 66

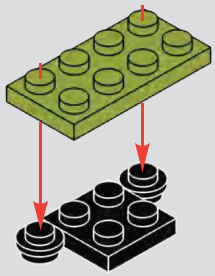

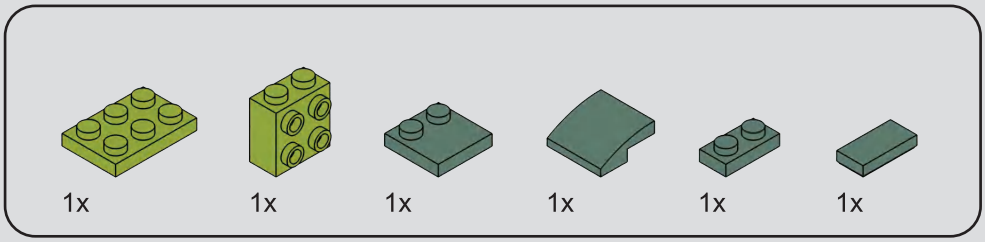


# 67

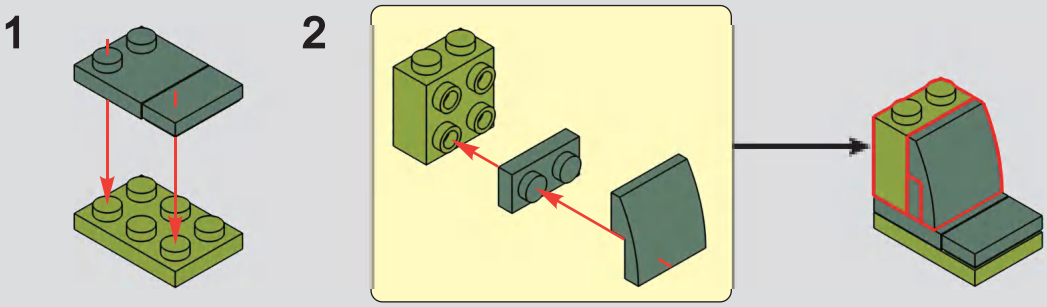


# 68

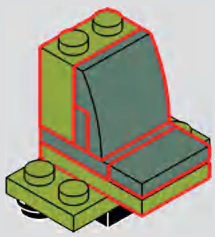

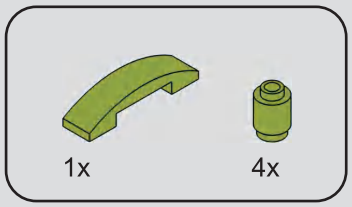


# 69

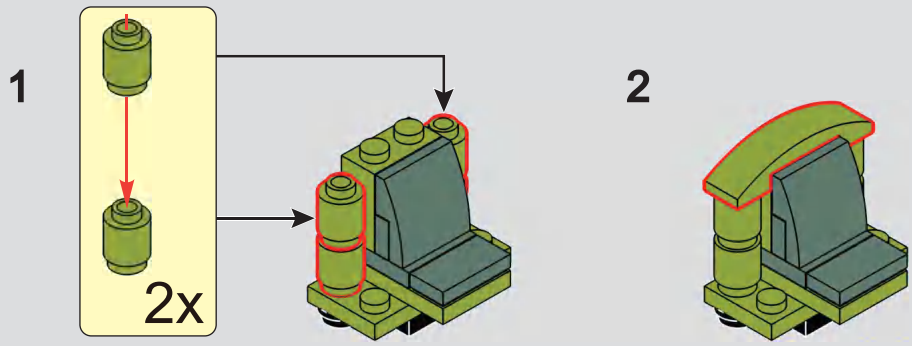


---

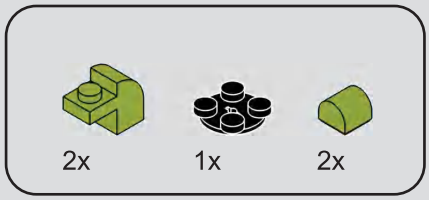


# 70

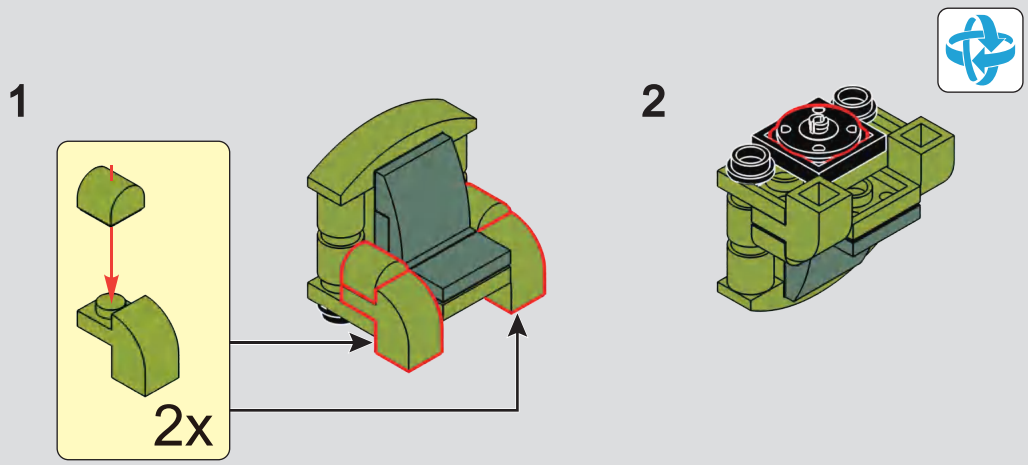

# 71

1

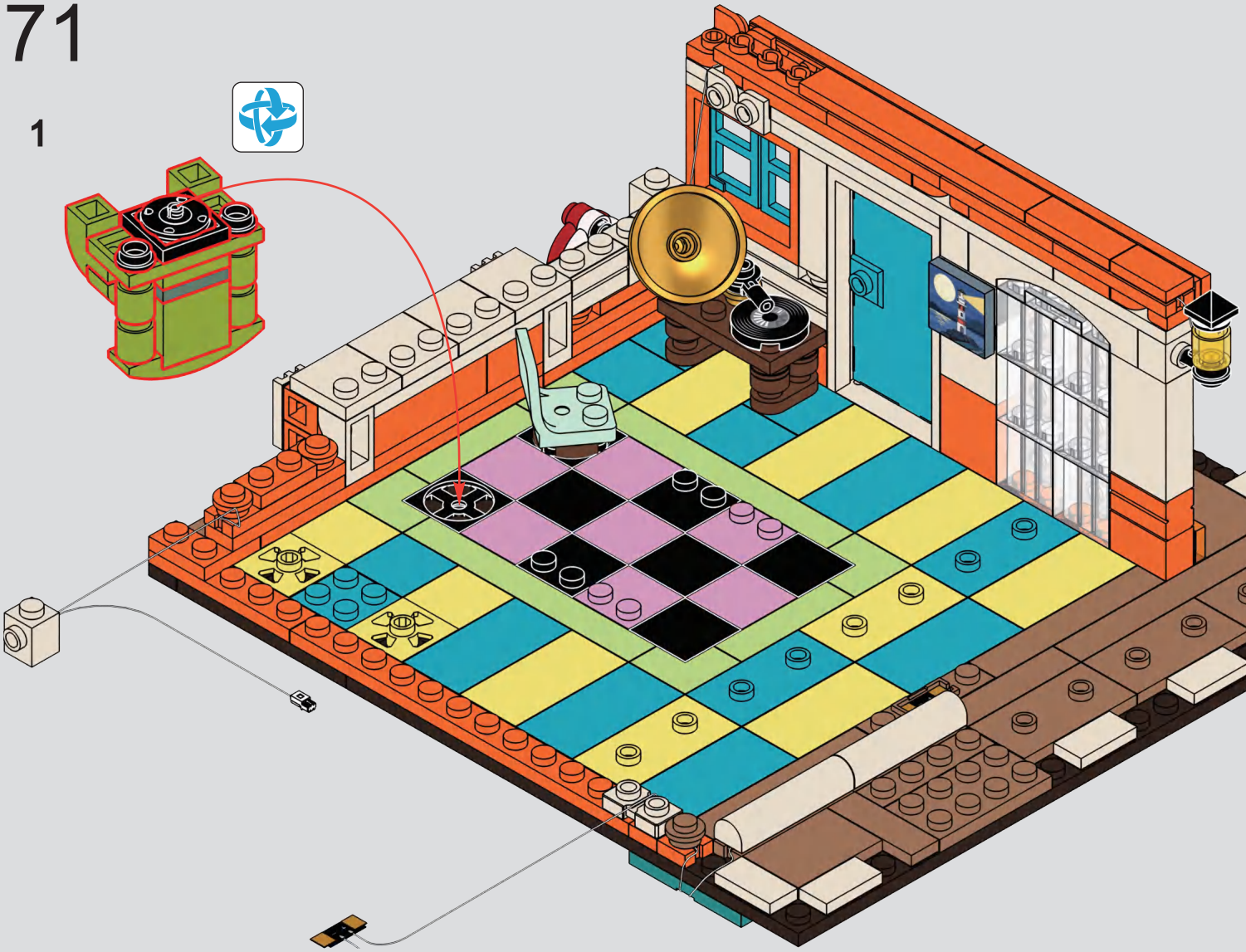

2

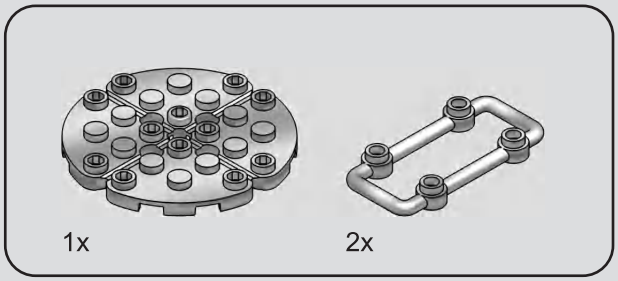


72

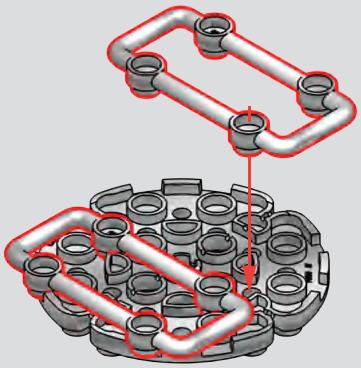

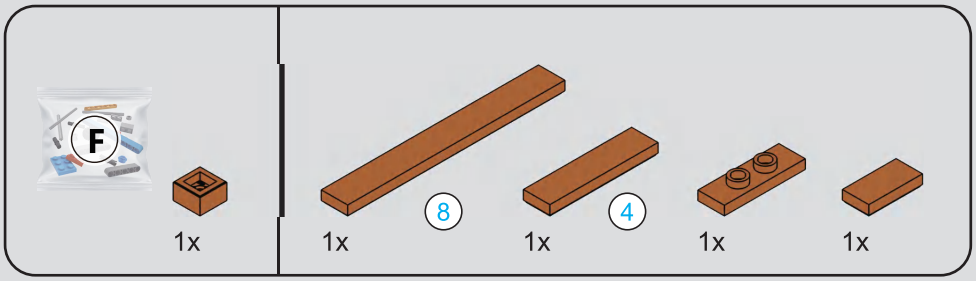


73

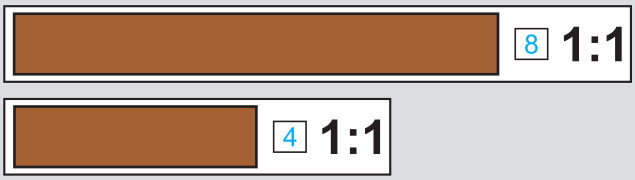


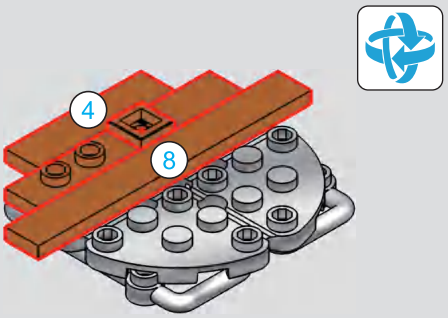


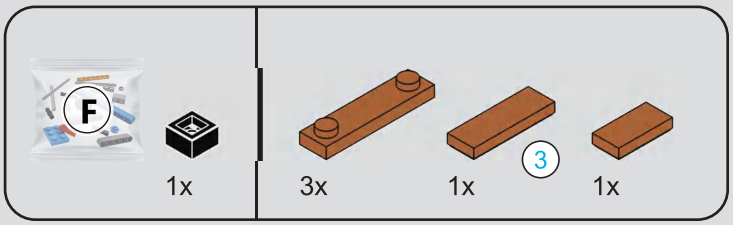


74

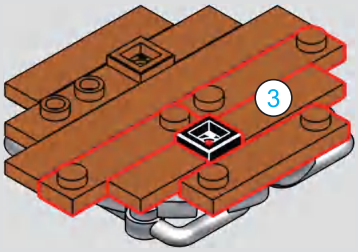

75

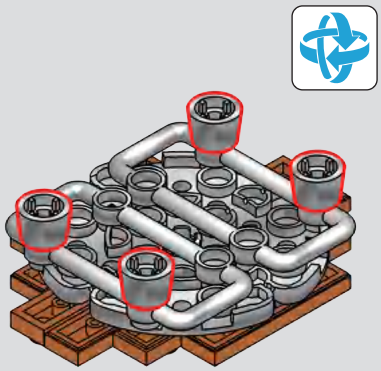

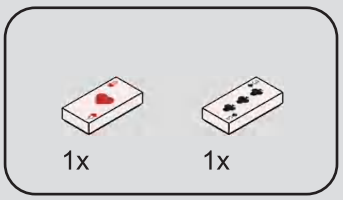


76

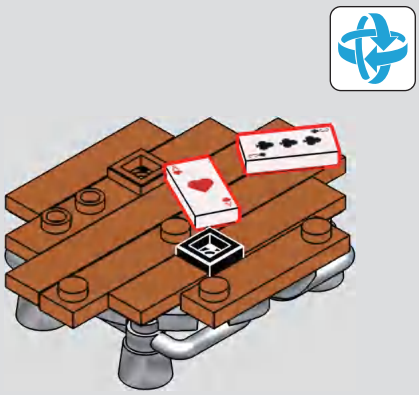

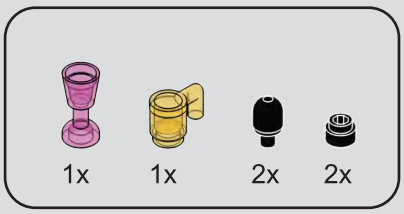


77

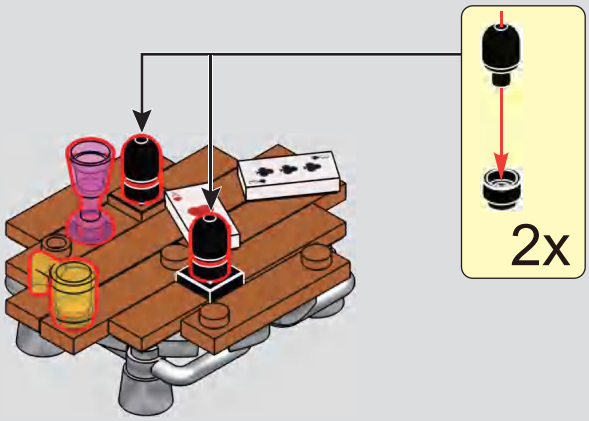

1

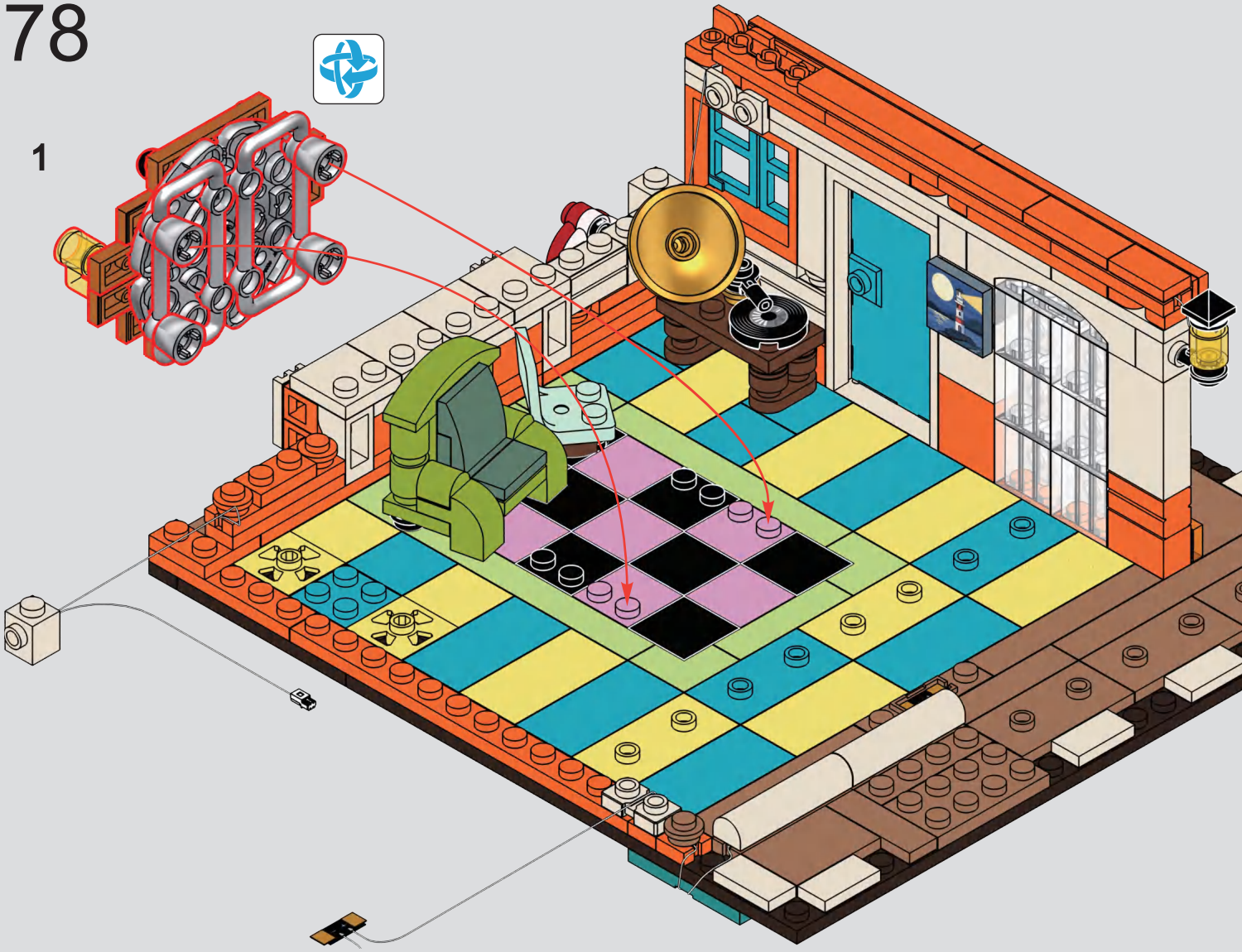

2

F
2x
1x
1x
2x
1x
2x
79
2x

1x
1x
1x
1x
80

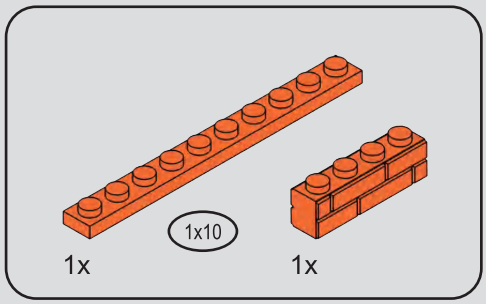


# 81

1

2

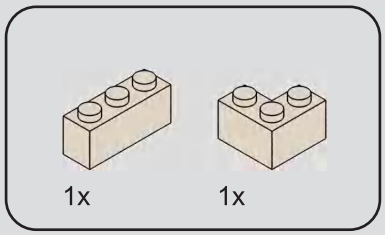


# 82

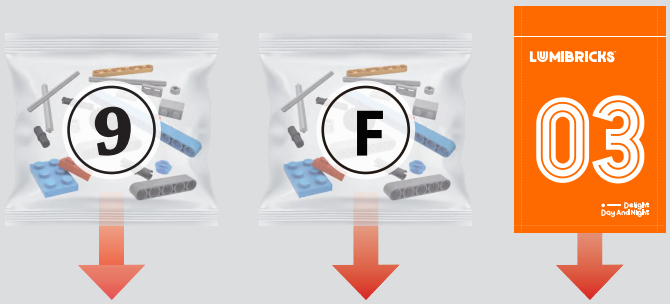
9
F
LUMIBRICKS
03
Delight
Day And Night

MOON BAR

83

1

2

# 84

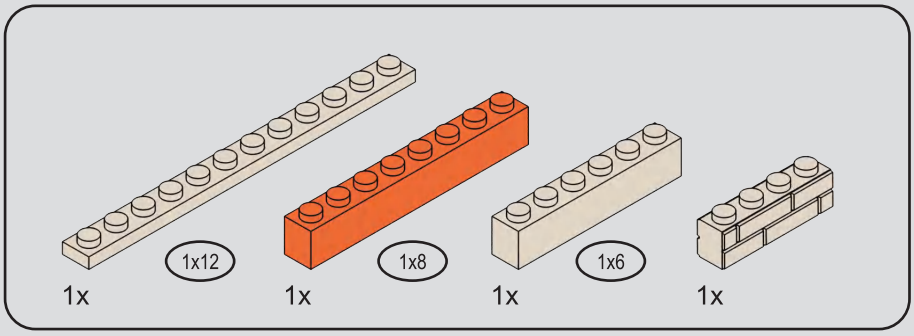


# 85

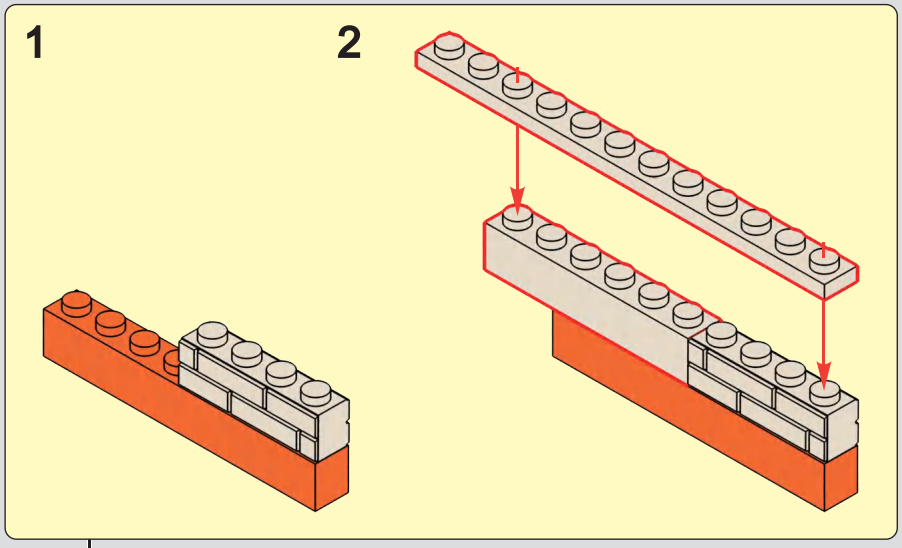

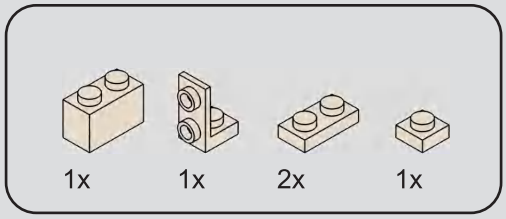


# 86

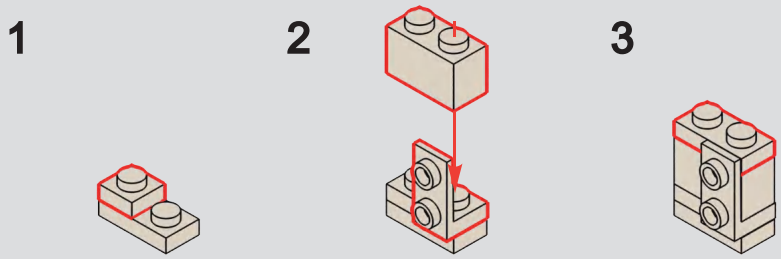


---

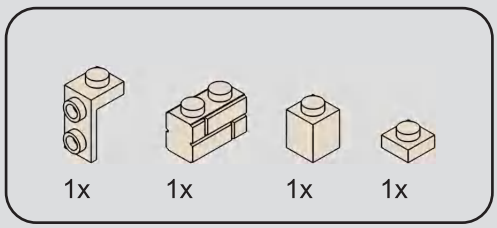


# 87

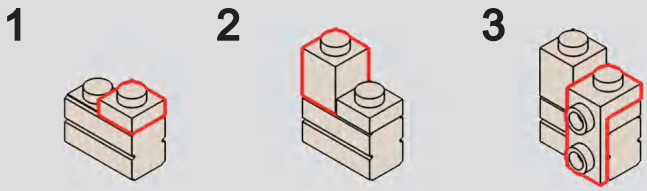


---

# 88

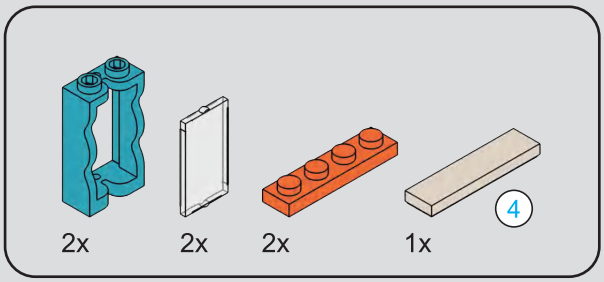

# 89

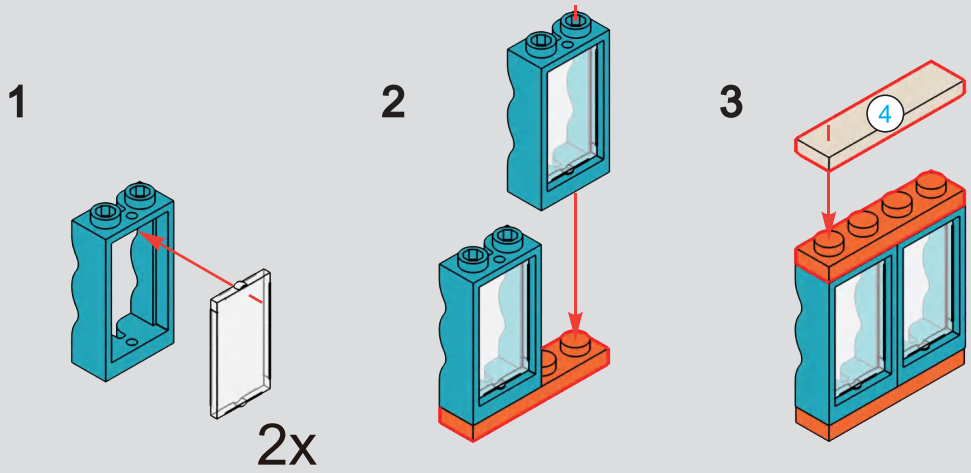


# 90

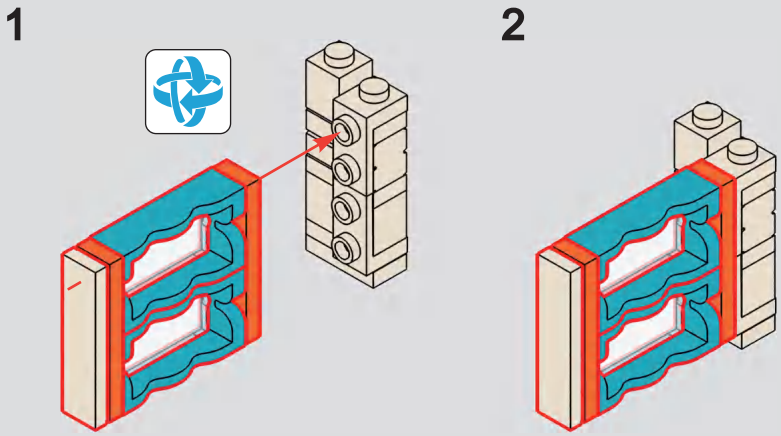

91

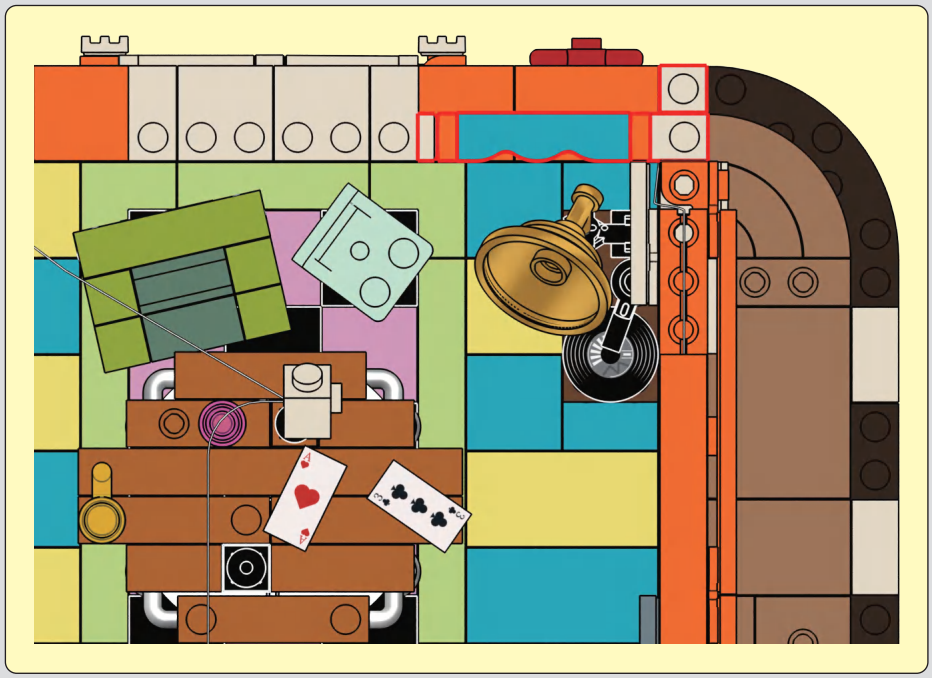

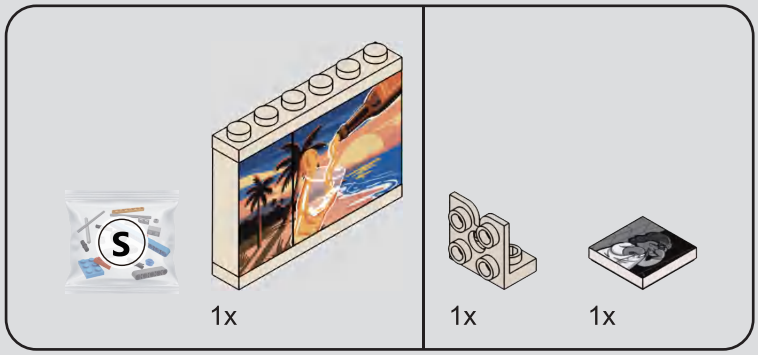


# 92

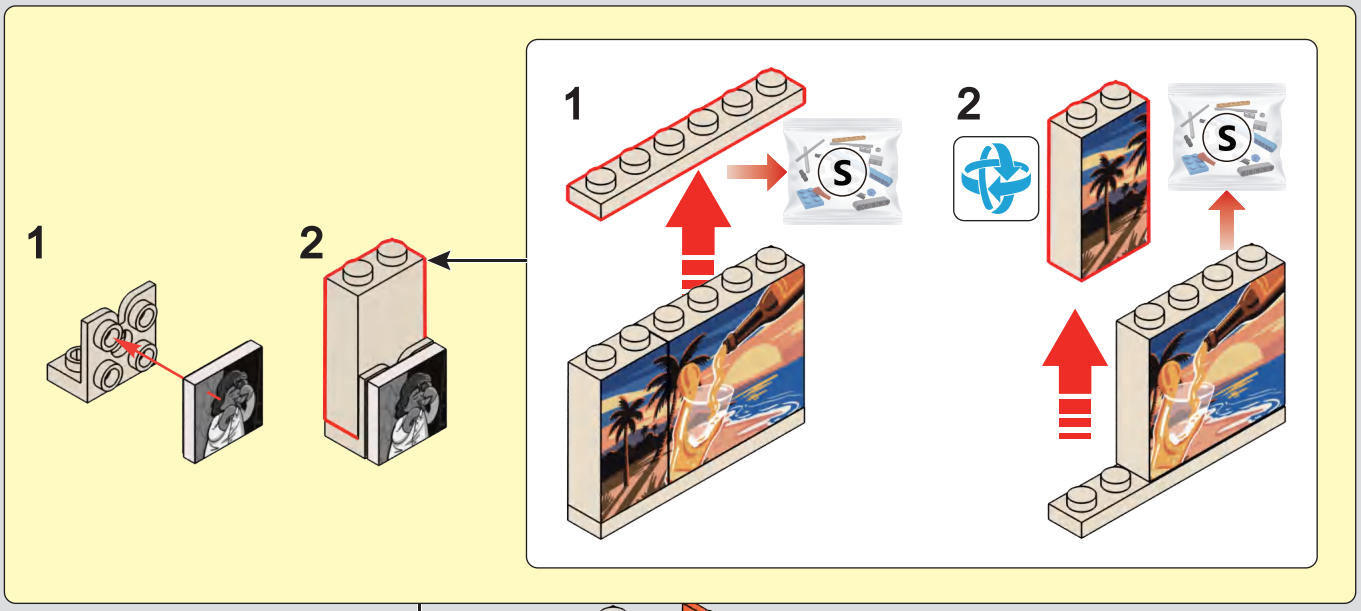

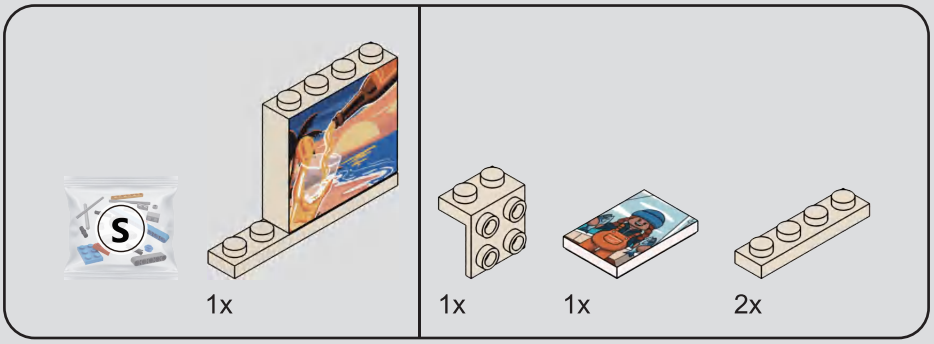


93

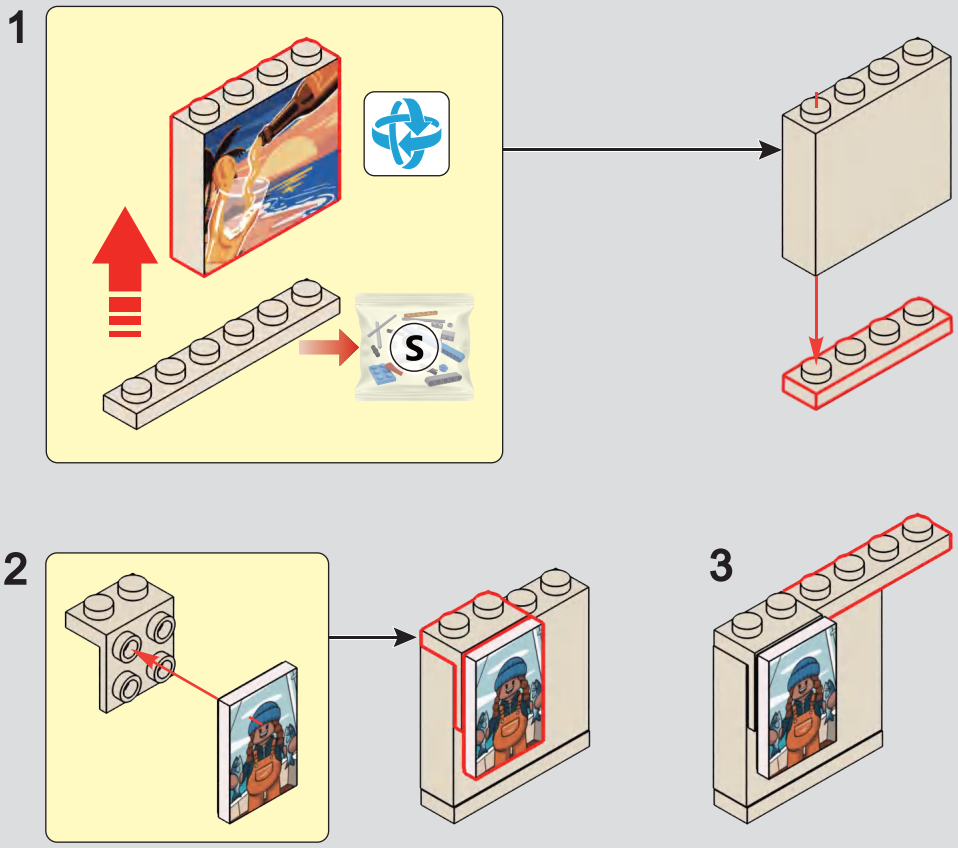


94

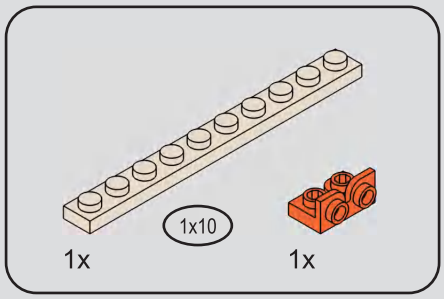


# 95

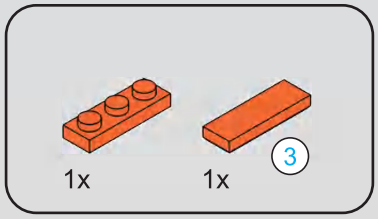


# 96

1

2

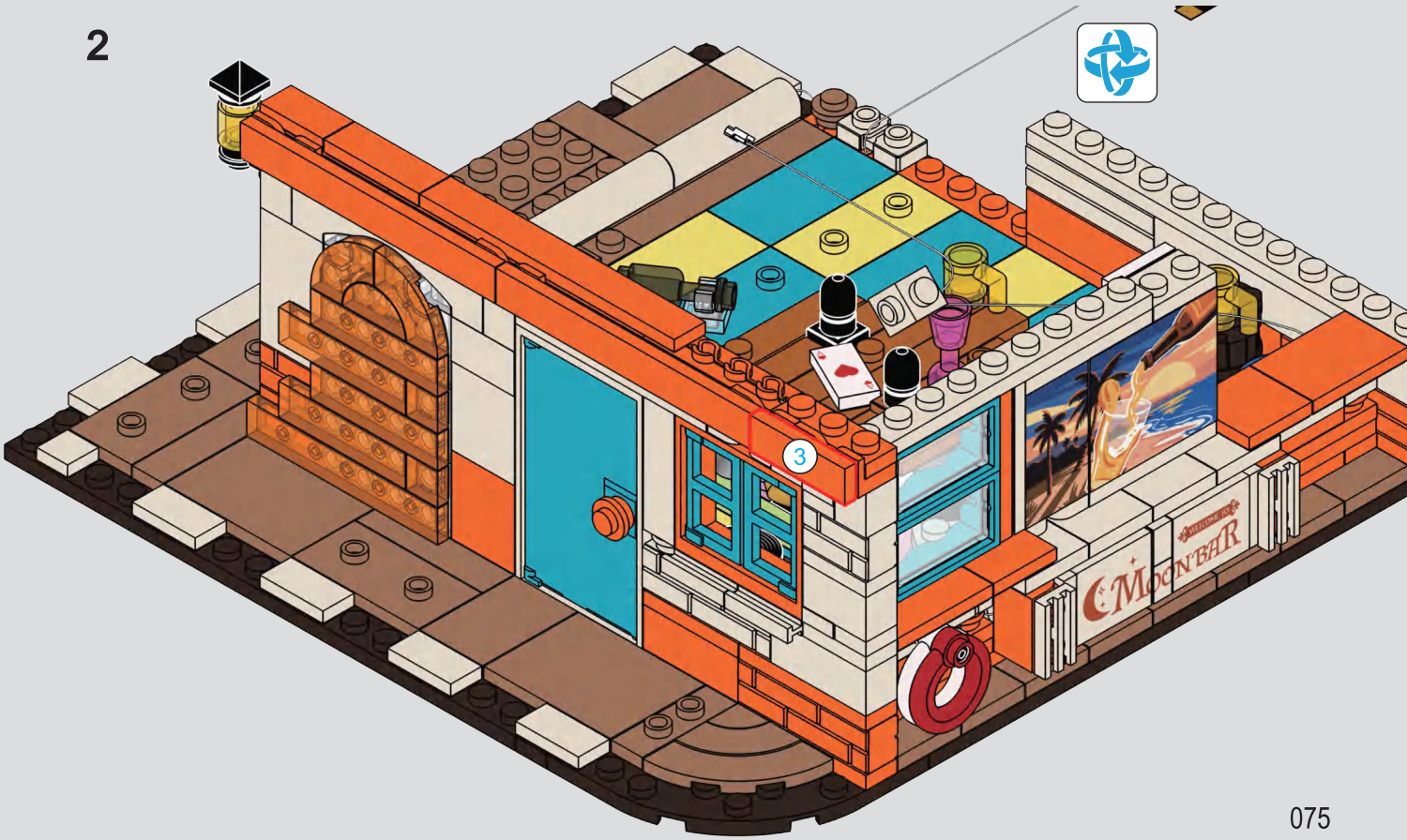

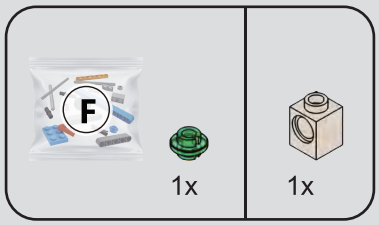
F
1x
1x

# 97

1

3
NO MORE MUSIC?
NO MORE MUSIC!

2

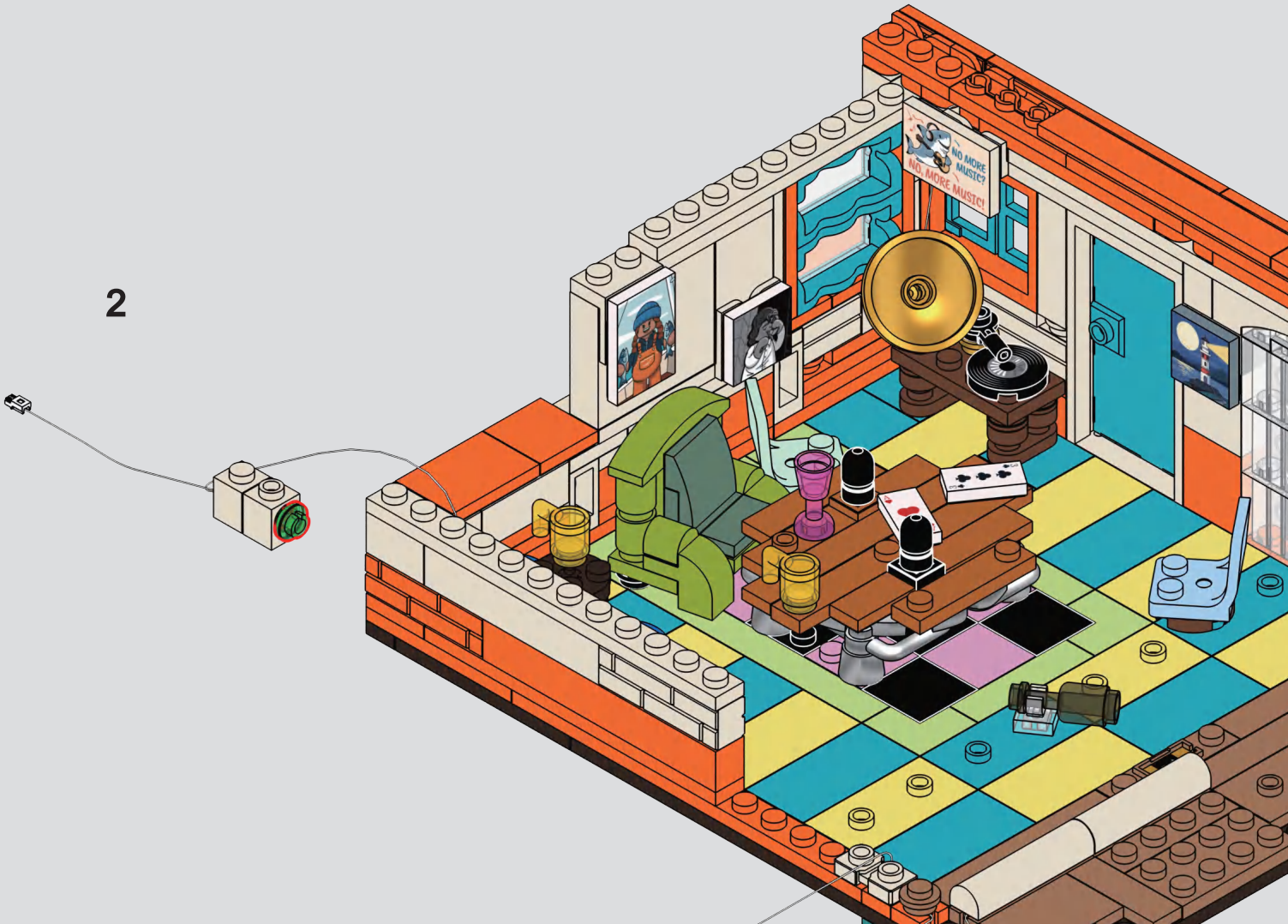
NO MORE MUSIC?
NO MORE MUSIC!

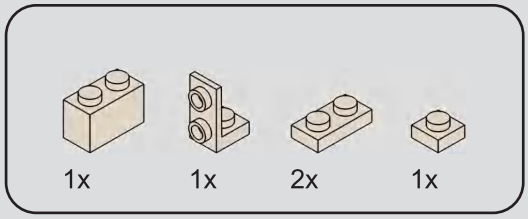


# 98

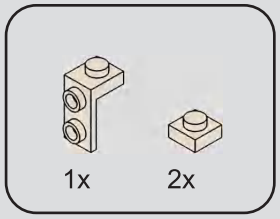


# 99

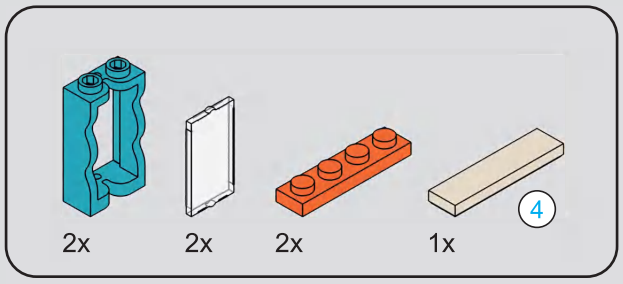
2x
2x
2x
1x
4

4 1:1

# 100

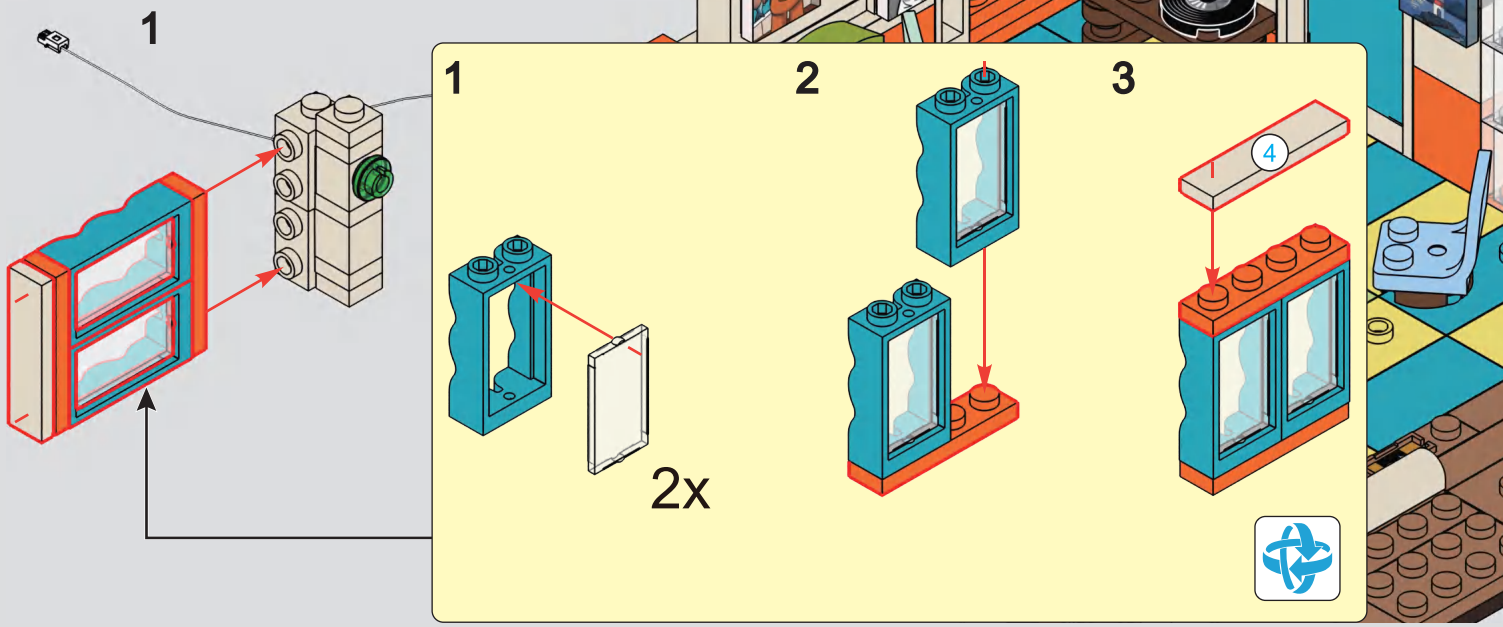
1
1
2
3
4
2x
NO MORE MUSIC?
NO MORE MUSIC!

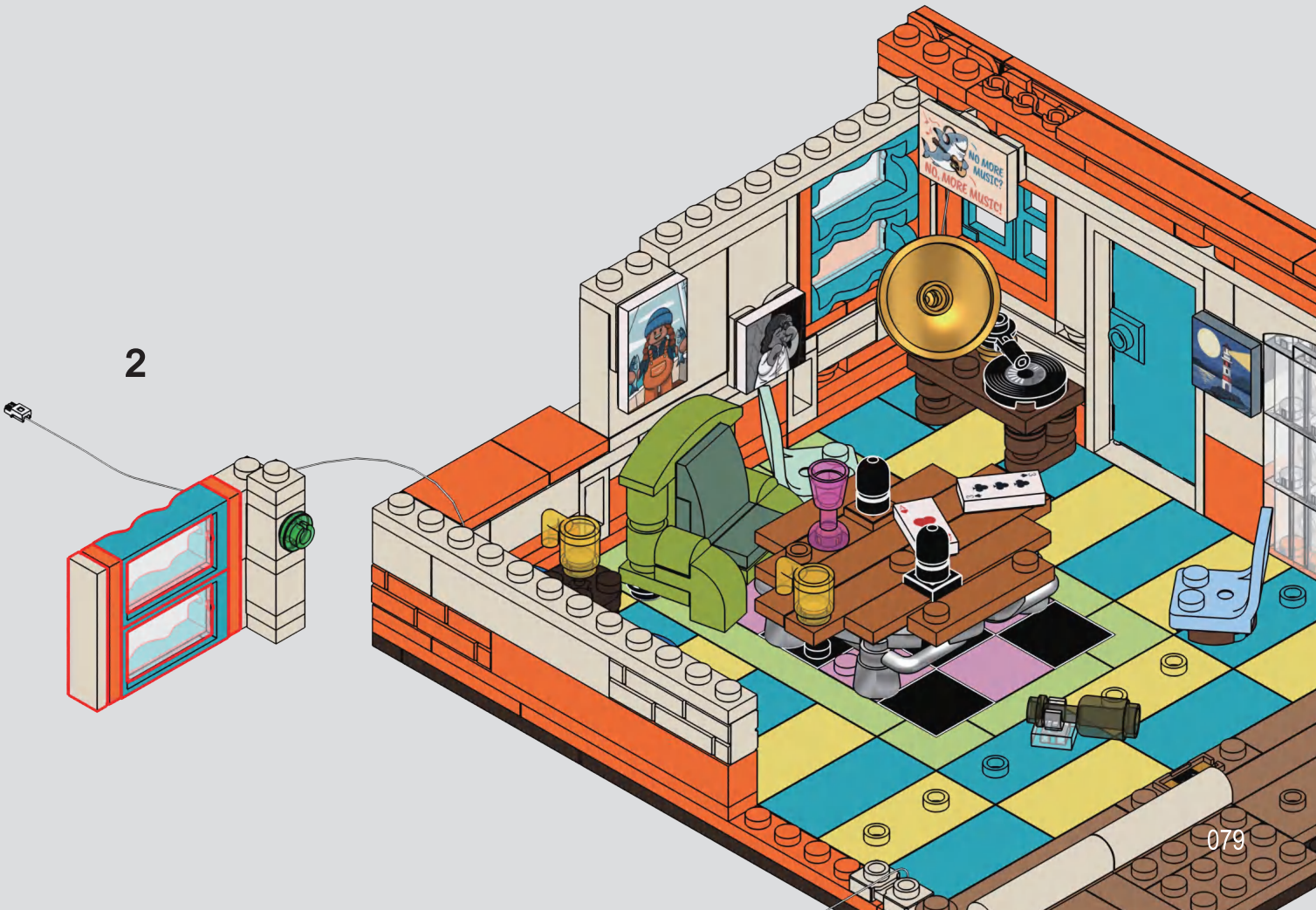
2
NO MORE MUSIC?
NO MORE MUSIC!

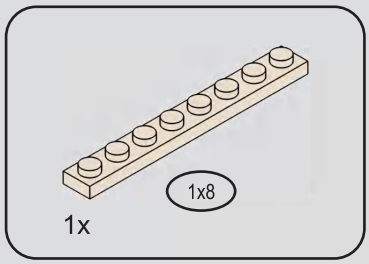


# 101

1

2

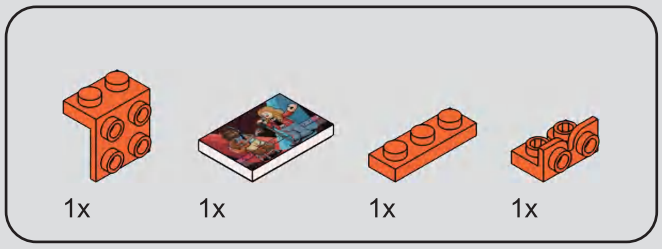


# 102

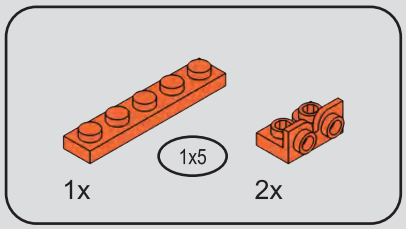


# 103

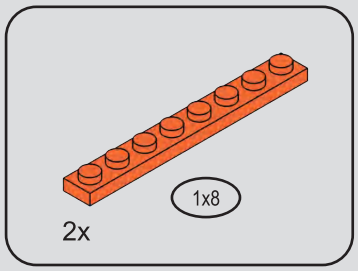


# 104

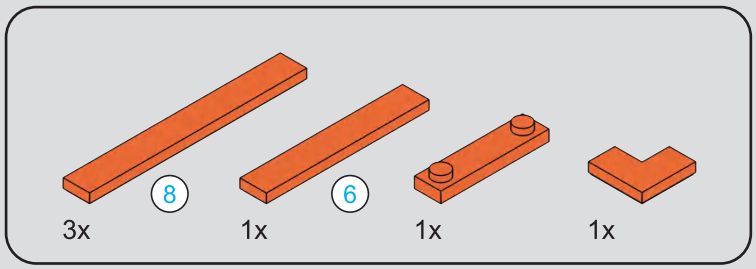


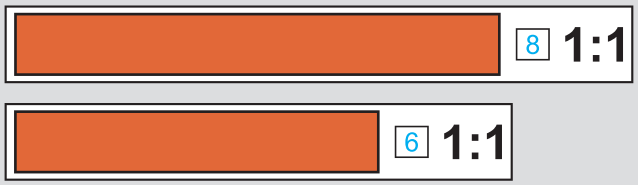


# 105

1

2

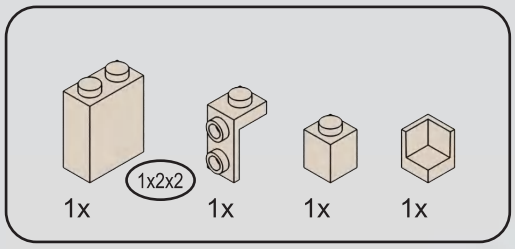
1x
1x2x2
1x
1x
1x

# 106

1

NO MORE MUSIC?
NO, MORE MUSIC!

2

NO MORE MUSIC?
NO, MORE MUSIC!
1
2
3

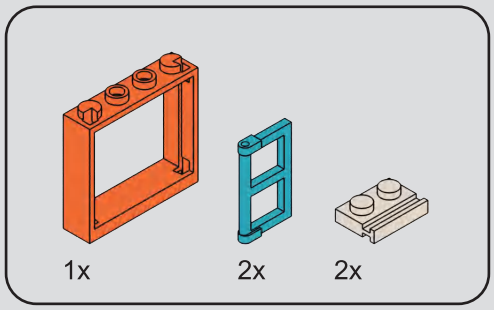


# 107

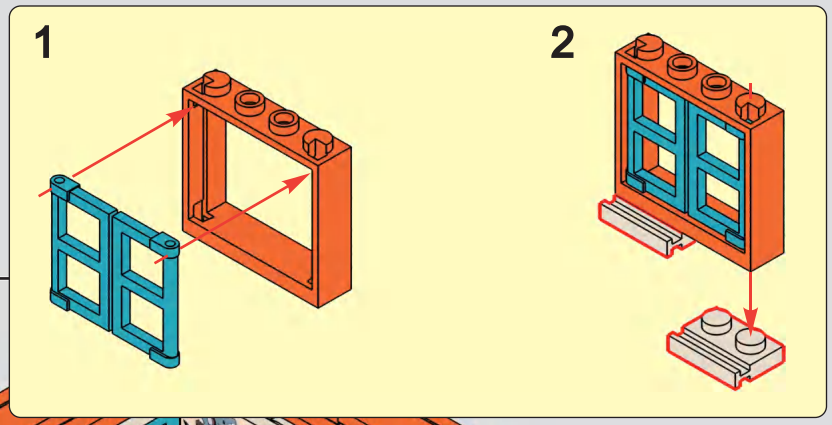

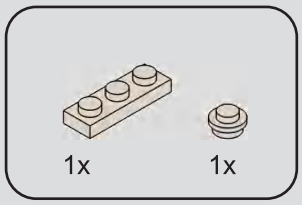


# 108

1

2

109

110

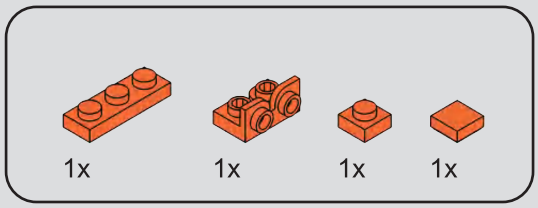


# 111

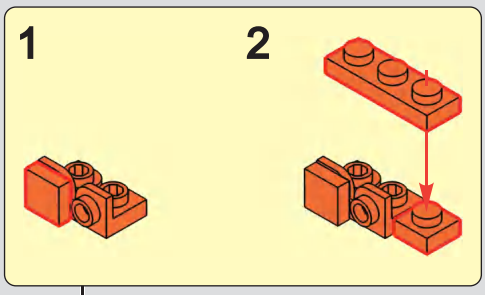

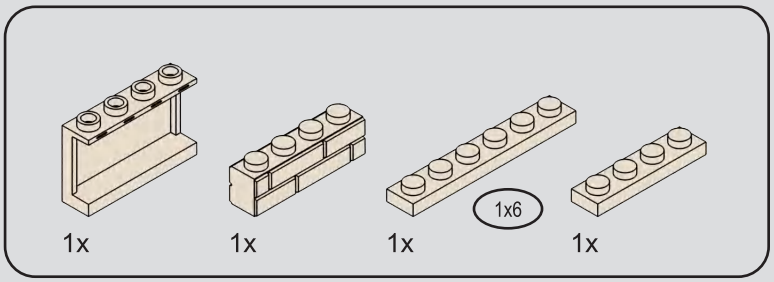


# 112

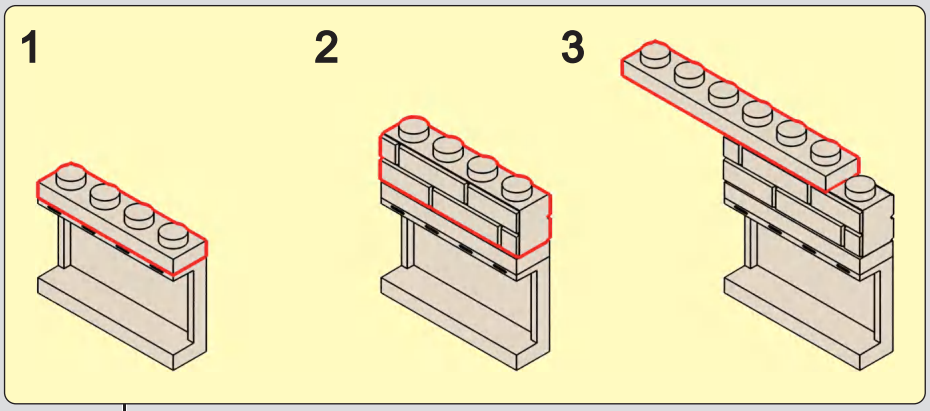

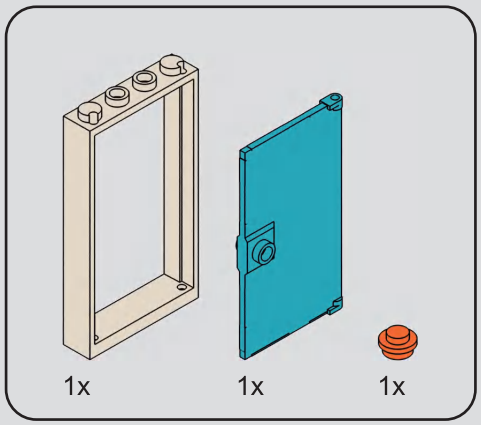


113

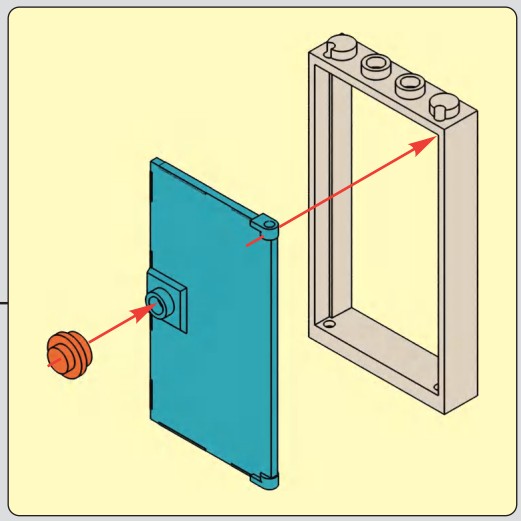

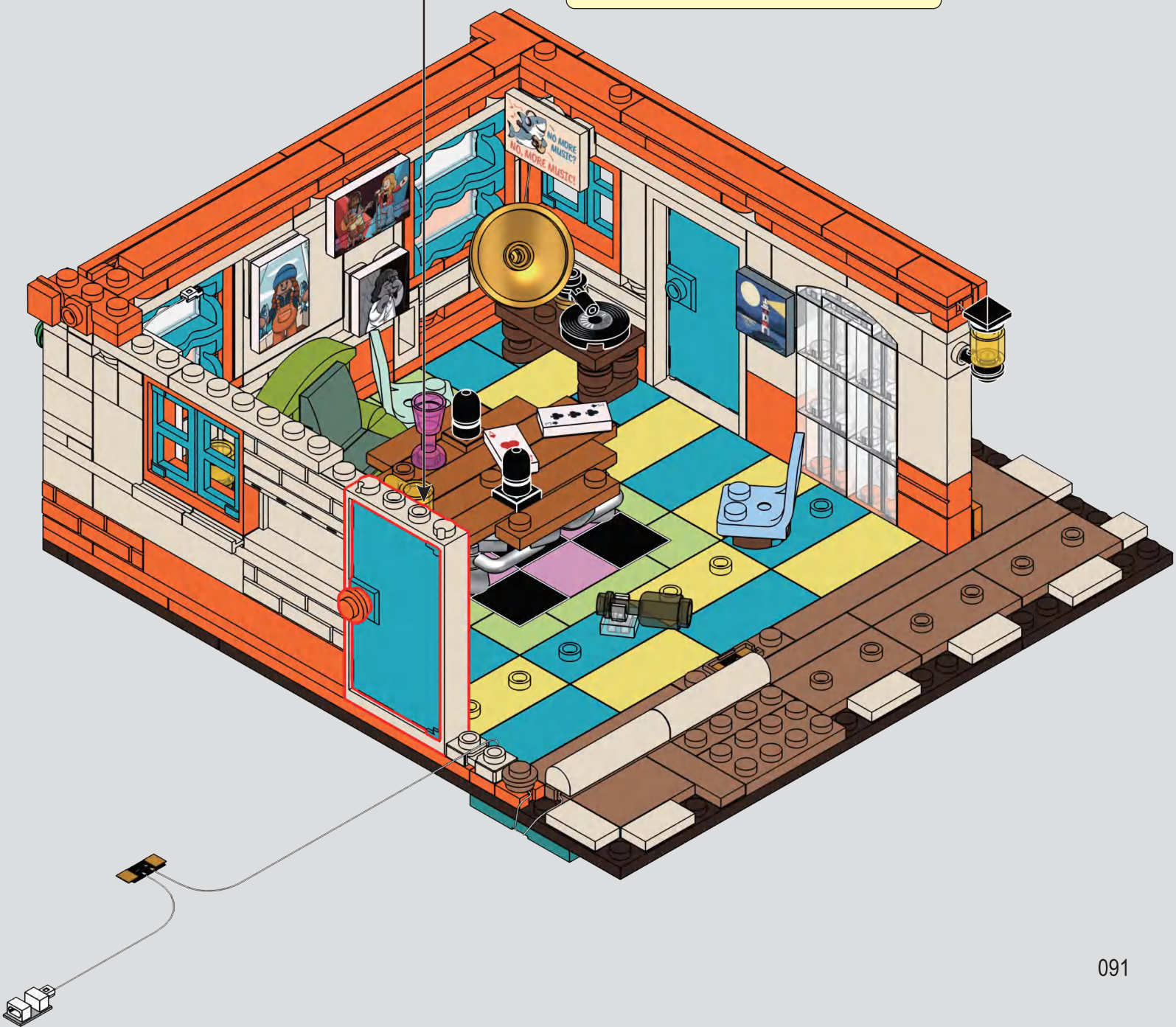

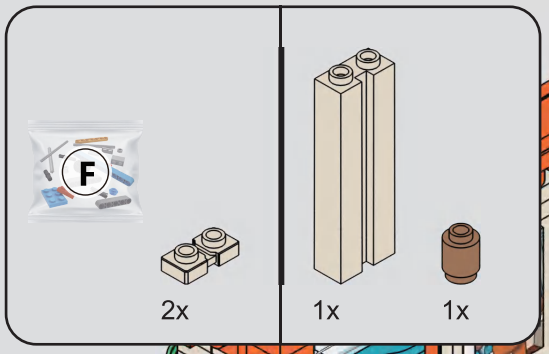


# 114

1

2

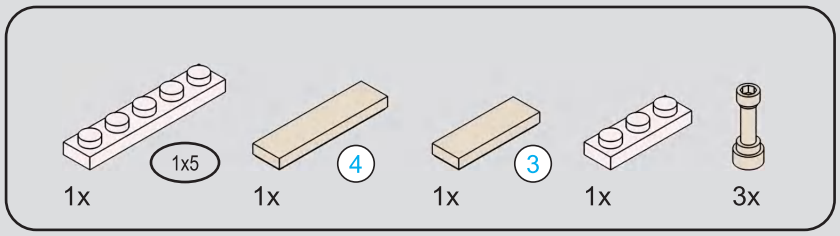

# 115

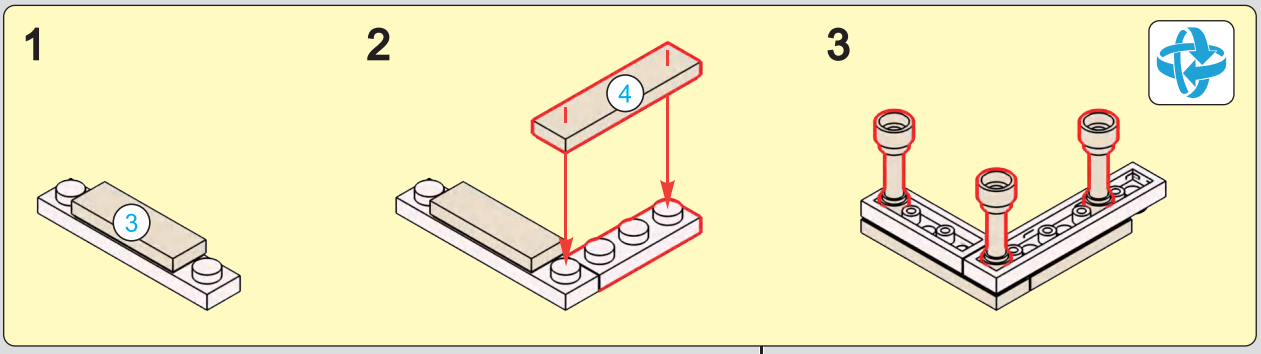

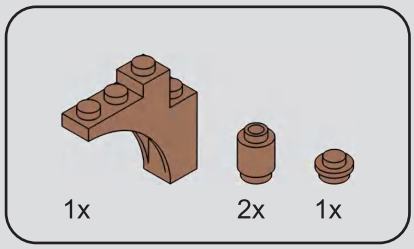


# 116

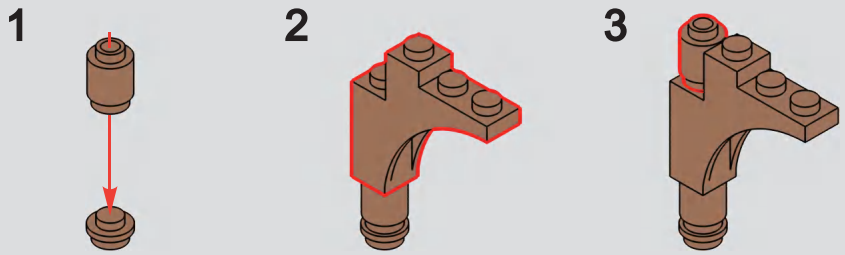


---

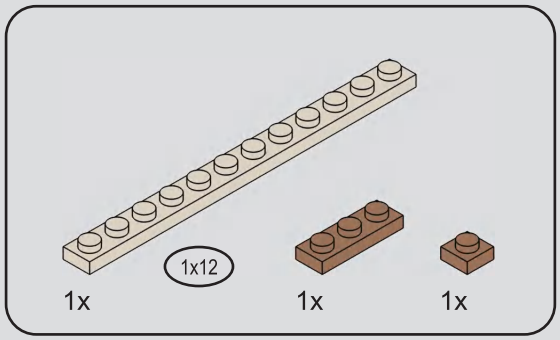


# 117

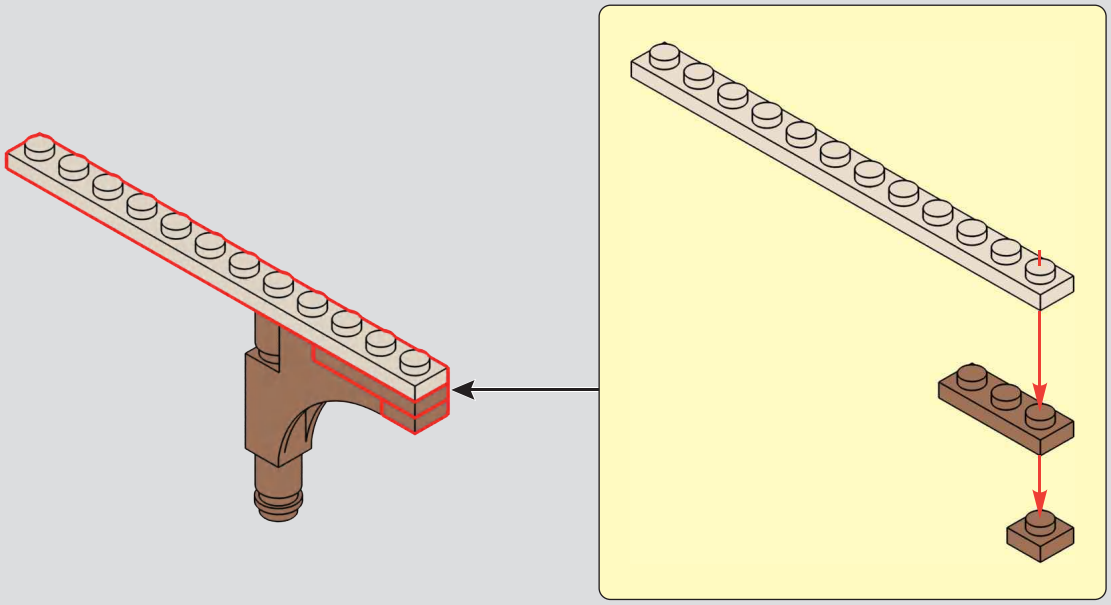

# 118

1

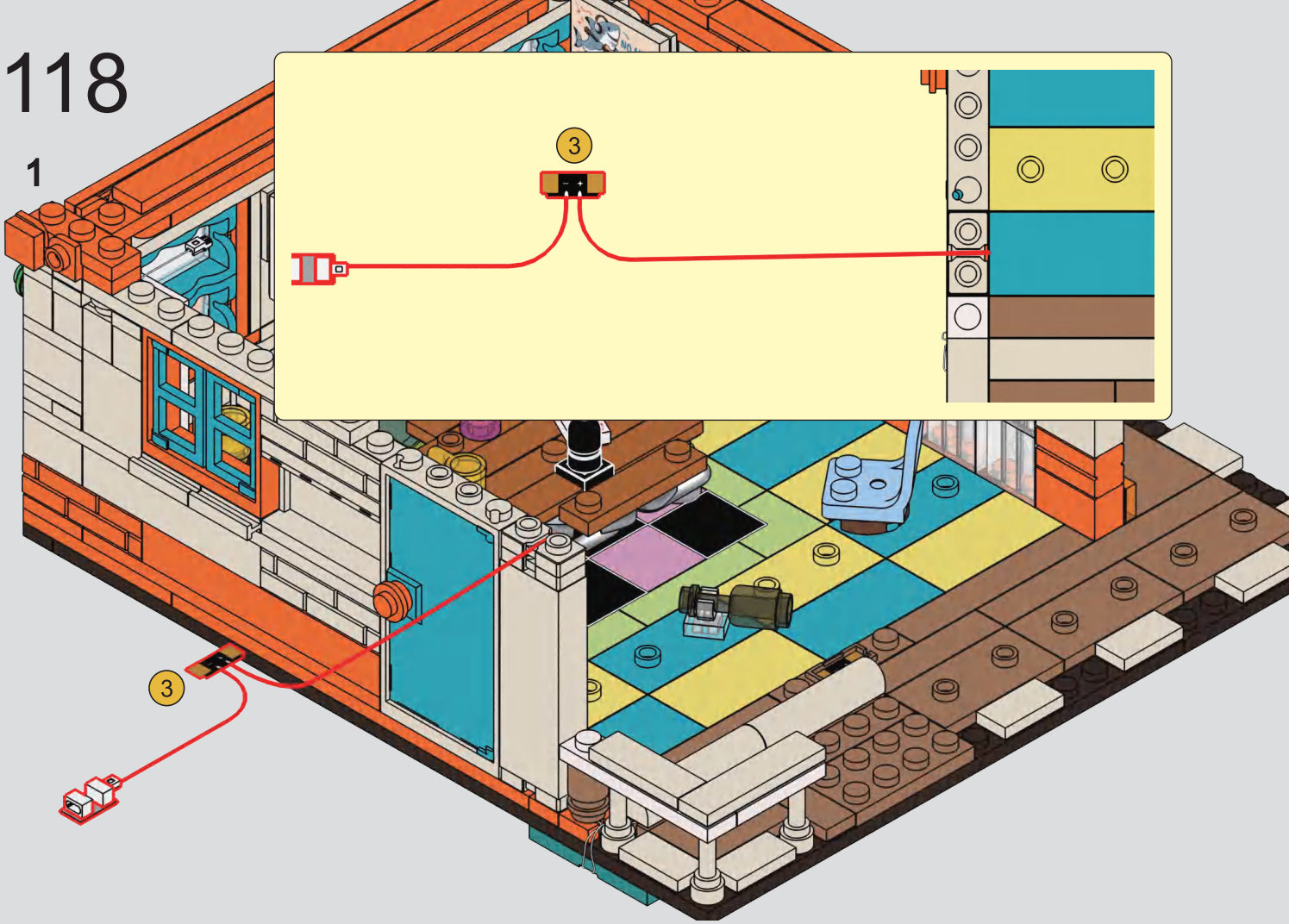


2

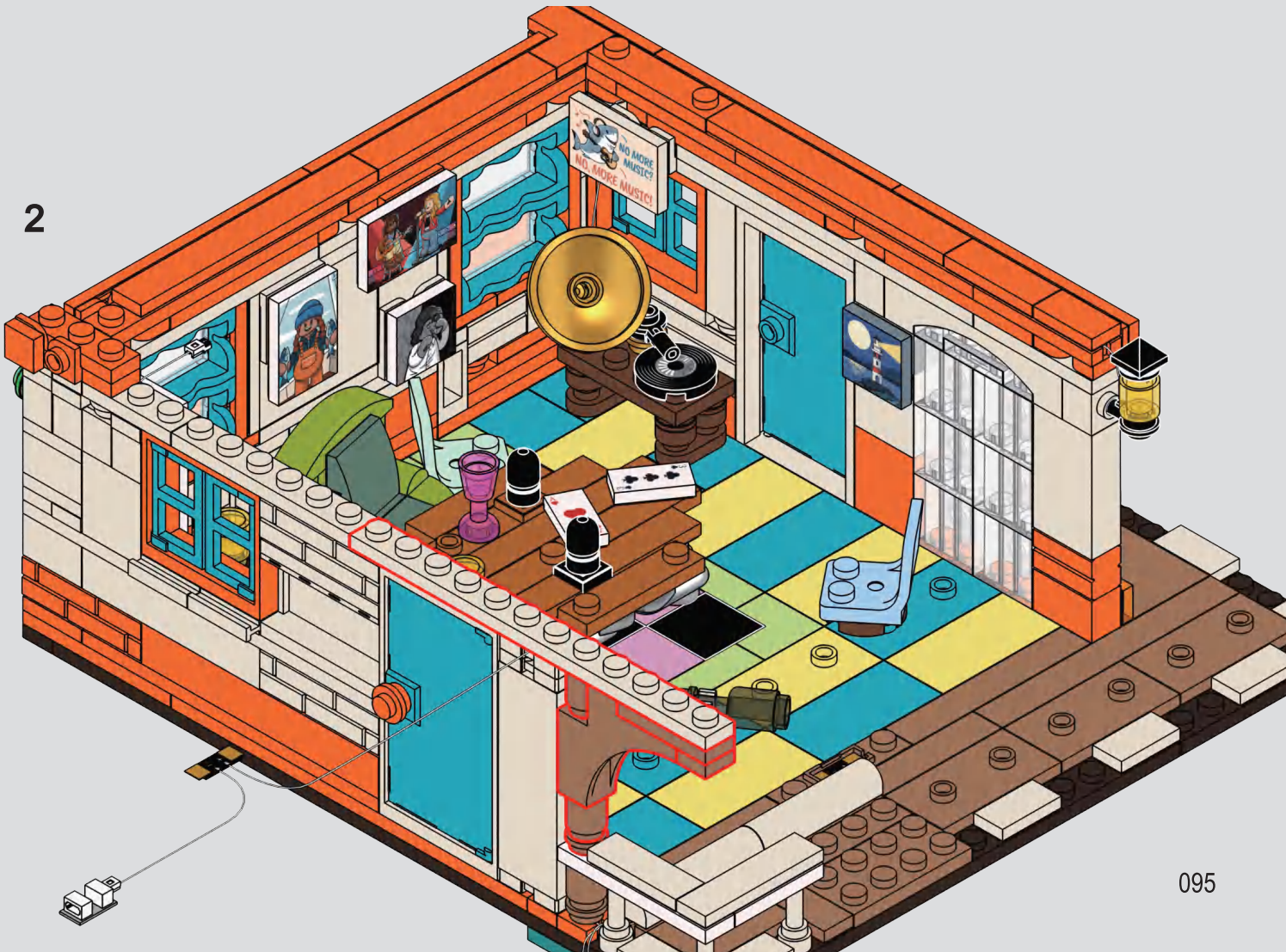

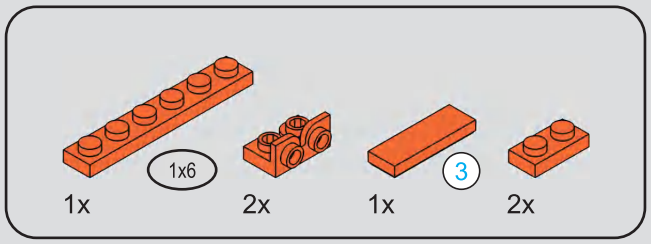


# 119

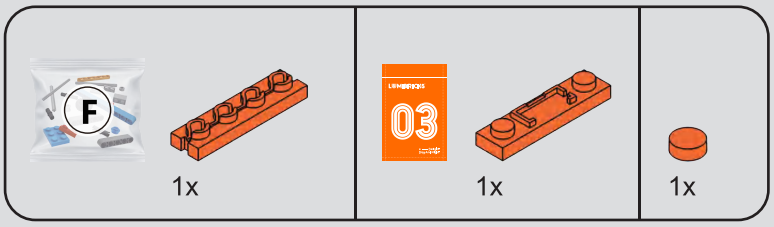


# 120

# 121

1

2

3

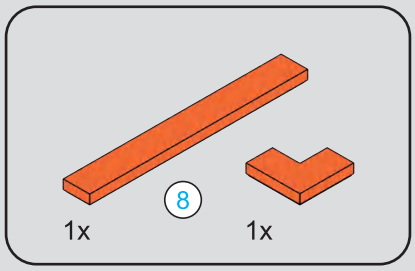
8
1x
1x

8 1:1

# 122

1

NO MORE MUSIC?
NO MORE MUSIC!

2

NO MORE MUSIC?
NO MORE MUSIC!
8

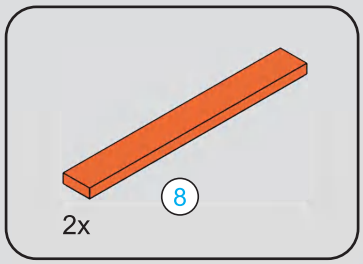


8 1:1

# 123

1

2

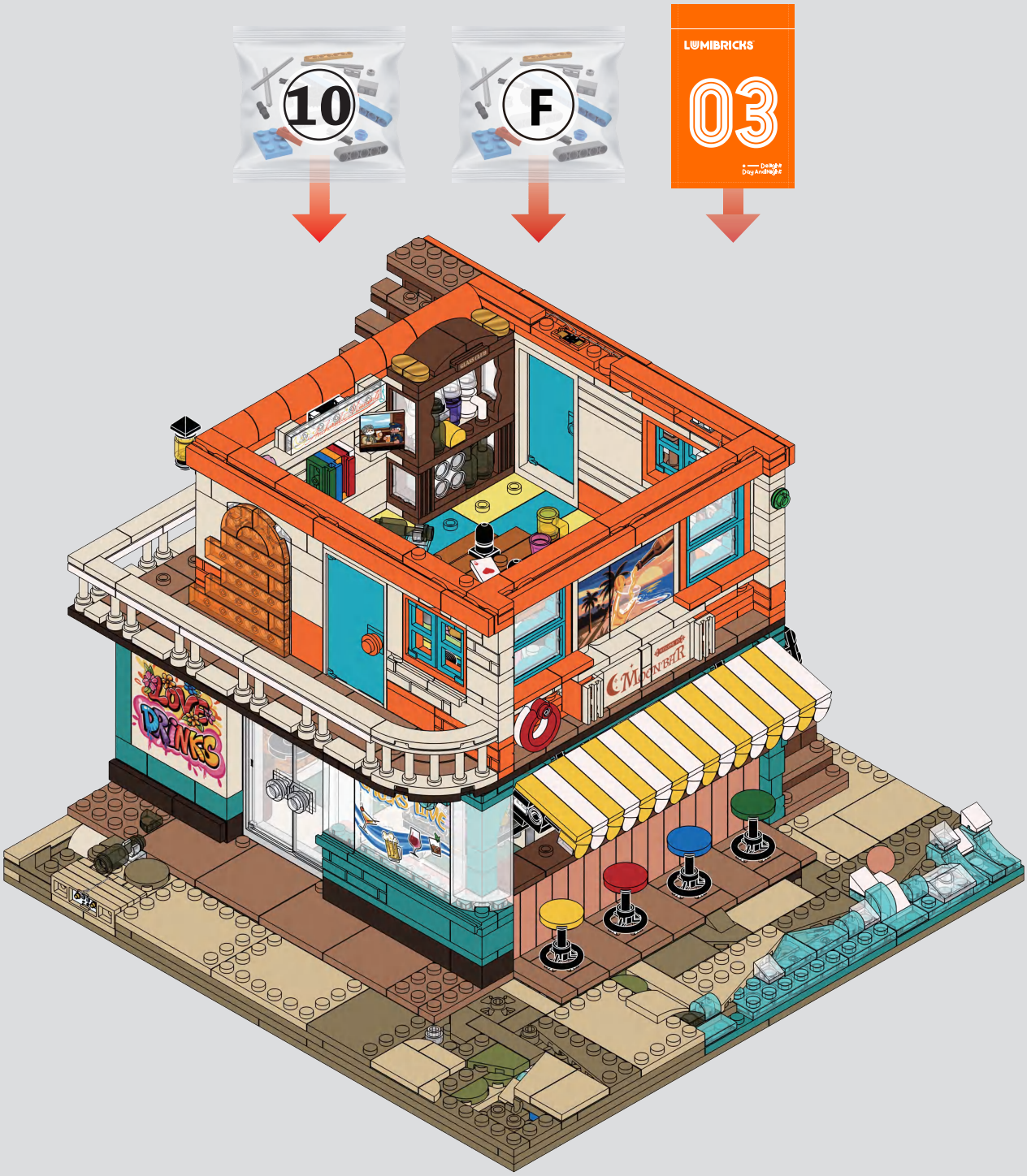
10
F
LUMIBRICKS
03
Delight
Day And Night
DRINKS

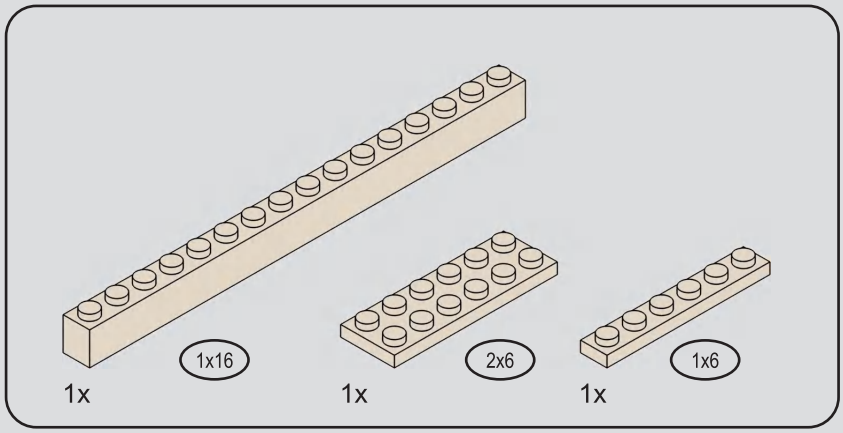


# 124

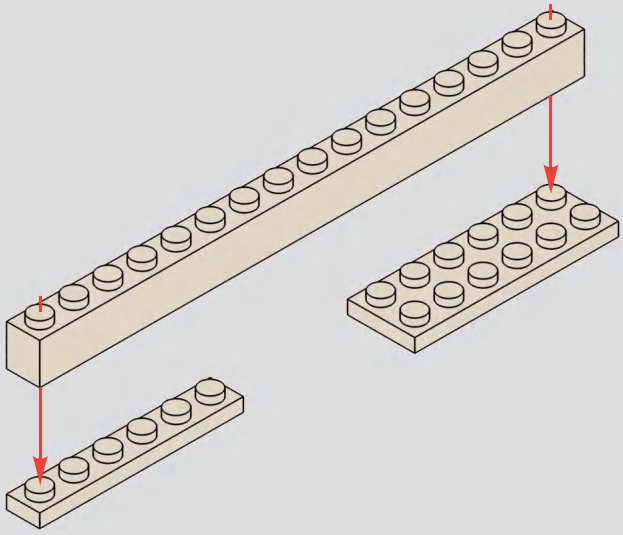

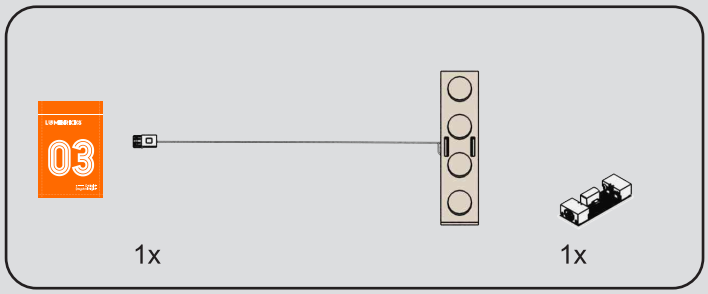


# 125

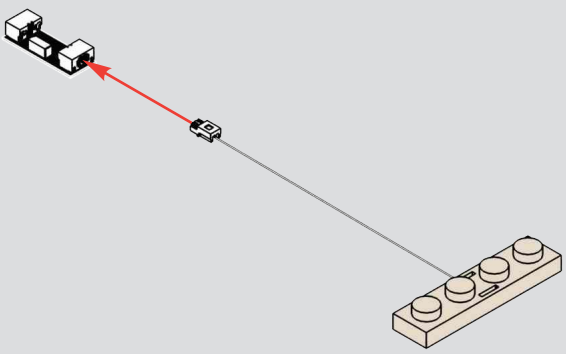

# 126

1

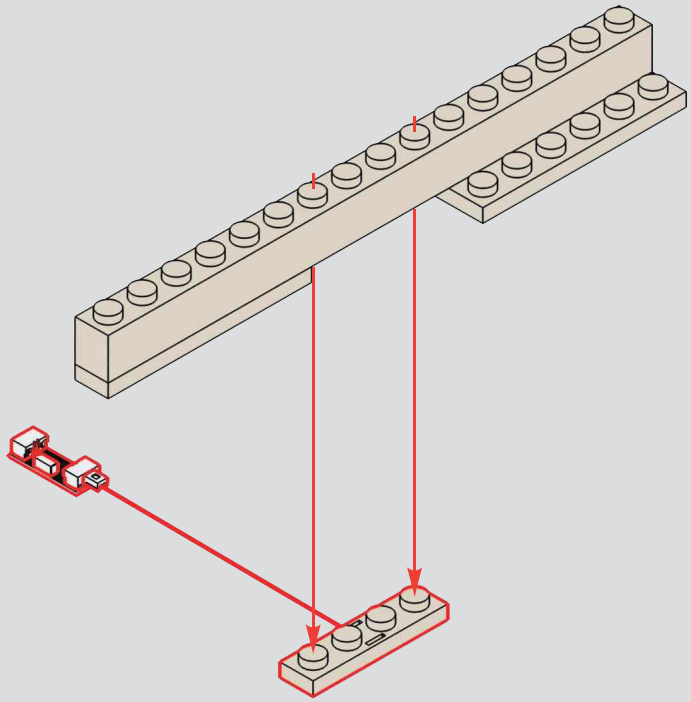

2

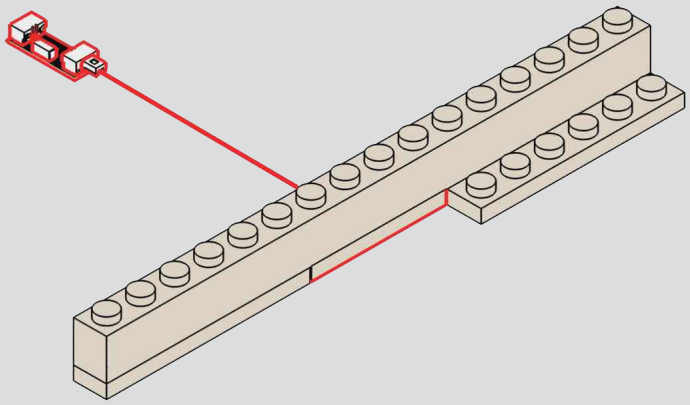

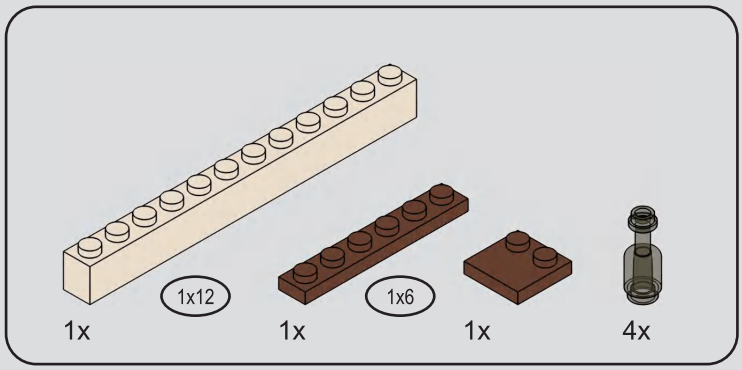


# 127

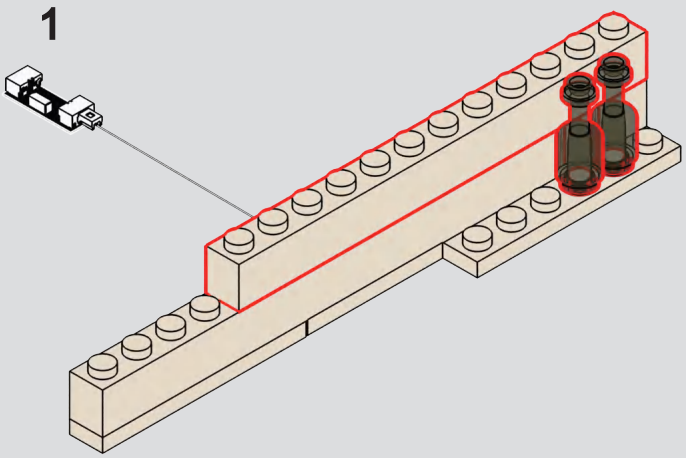


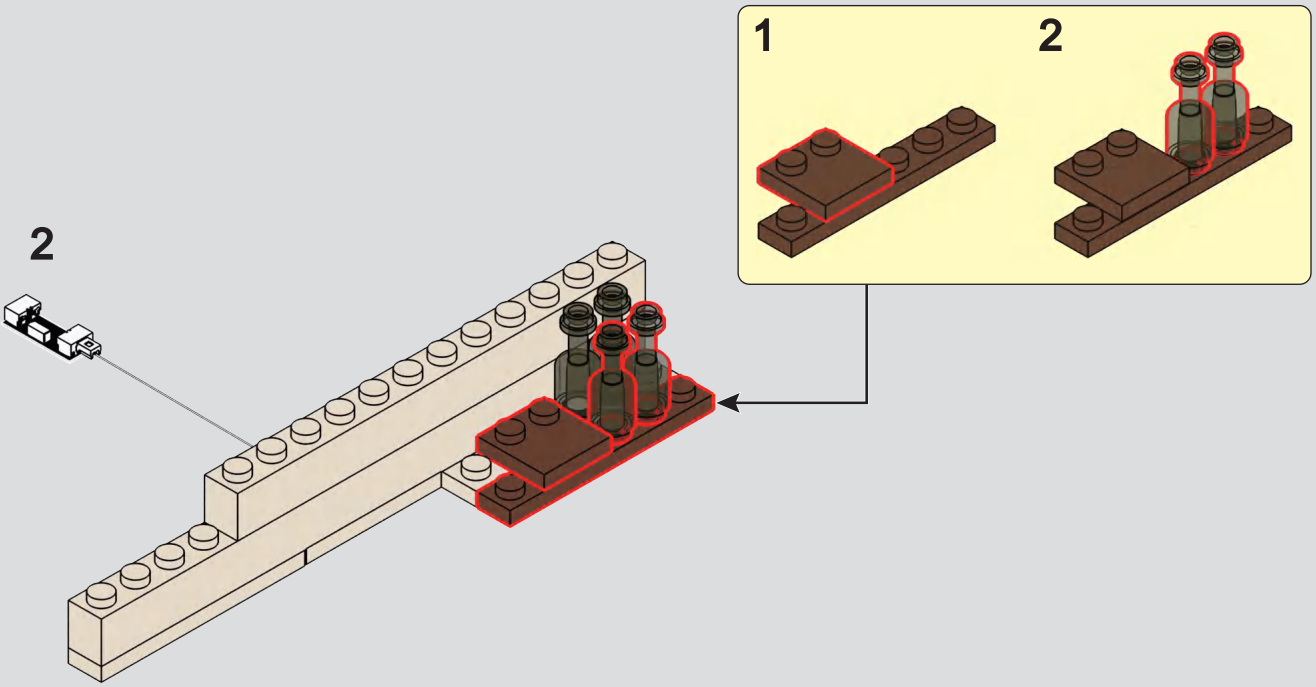

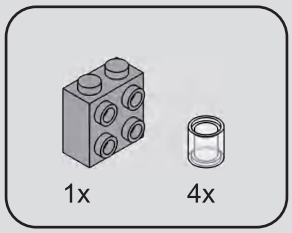


# 128

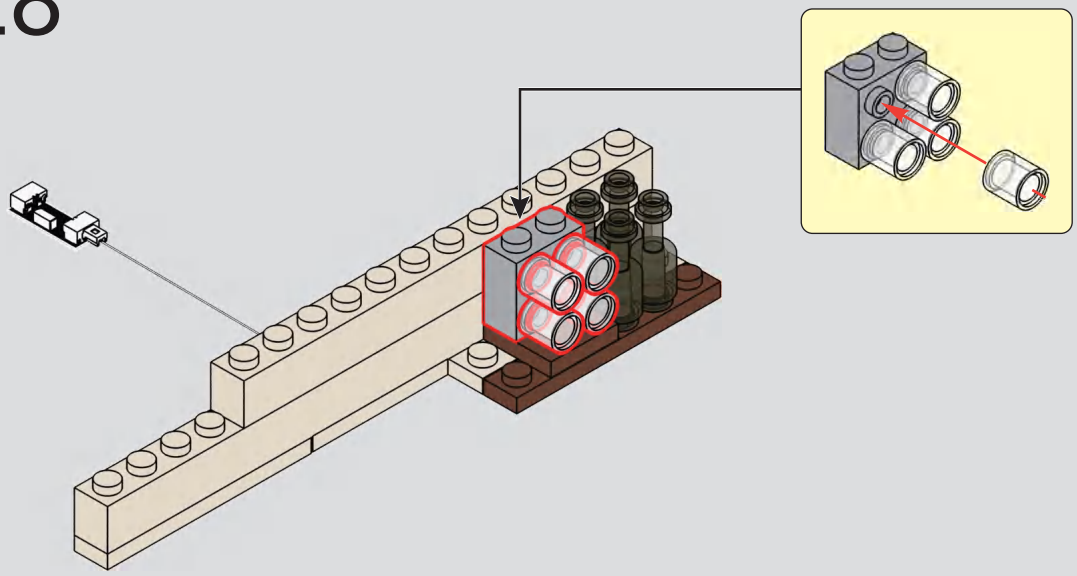

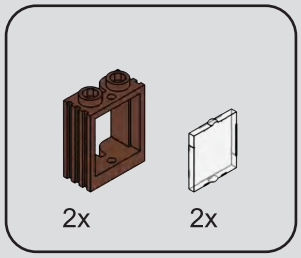


# 129

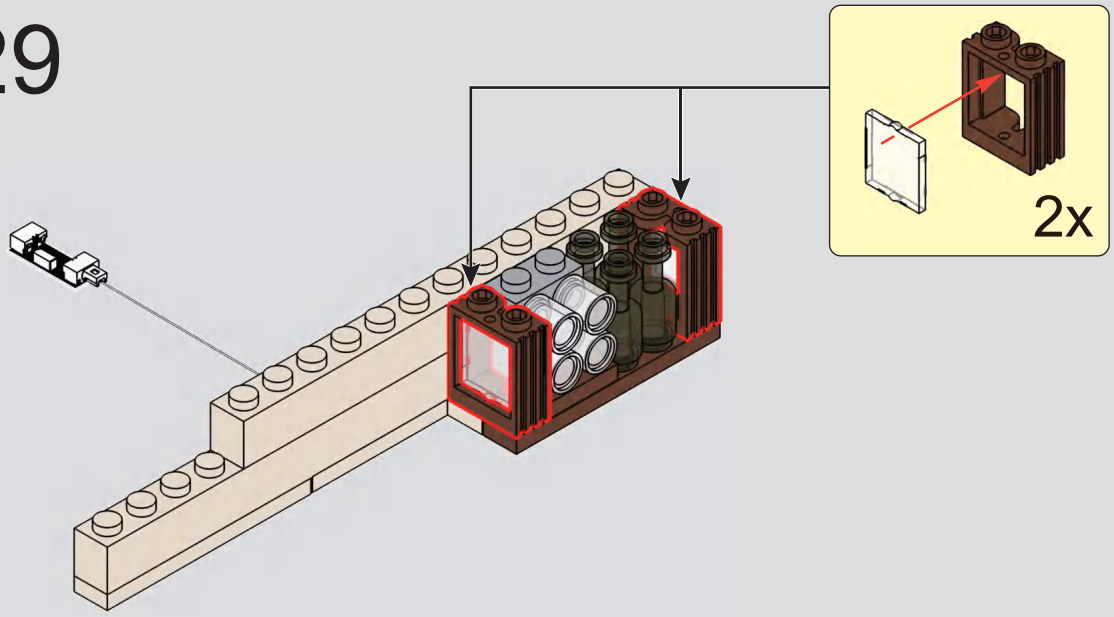

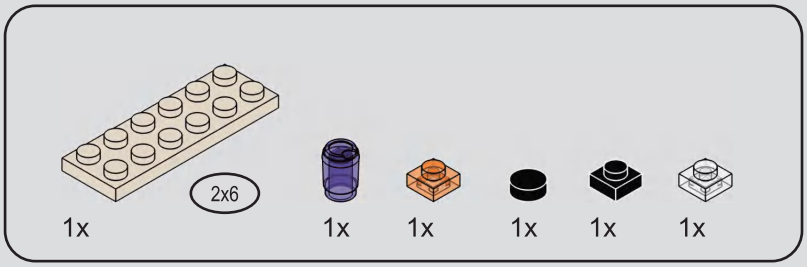


# 130

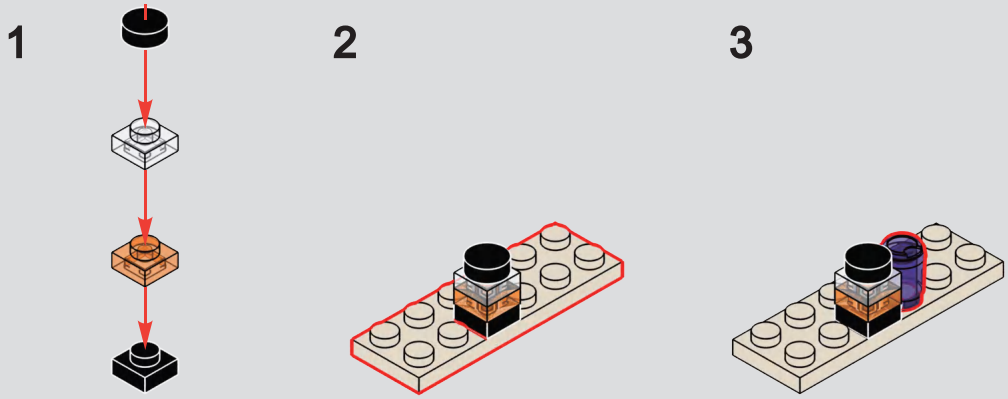


# 131

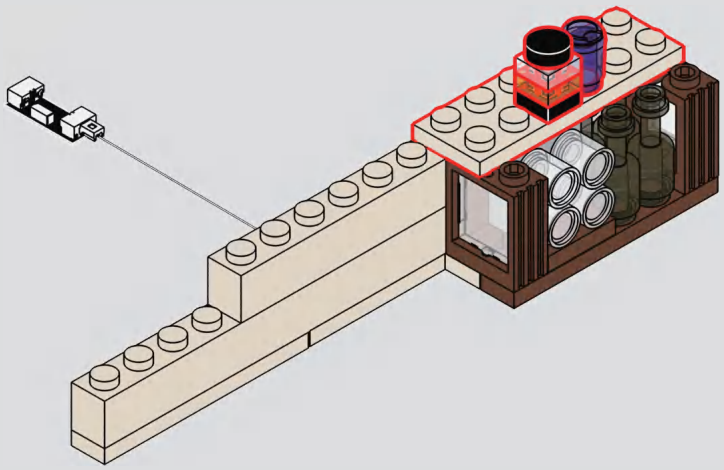

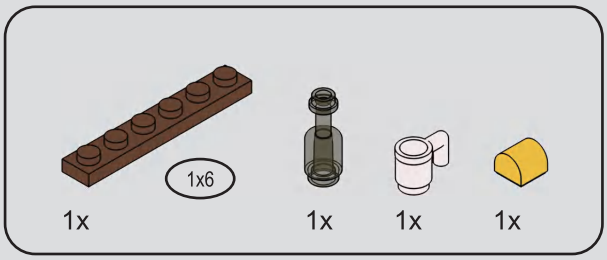


# 132

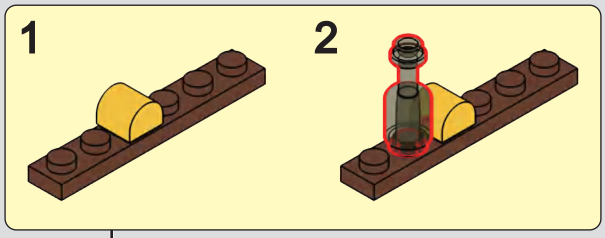


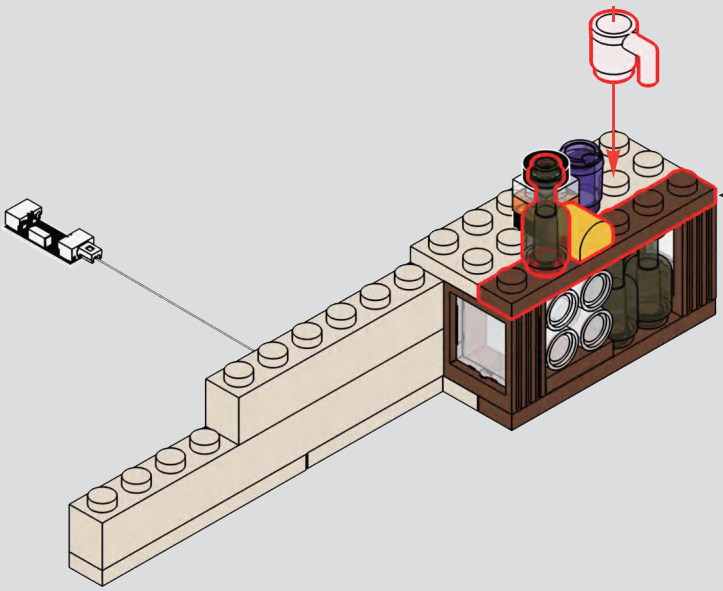

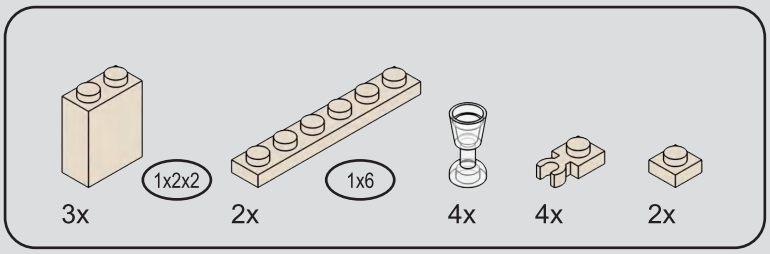


# 133

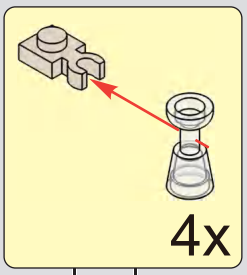


1

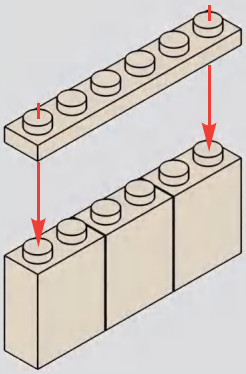

2

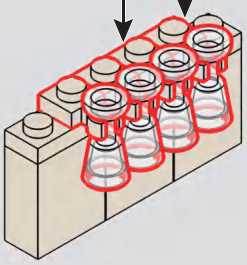

3

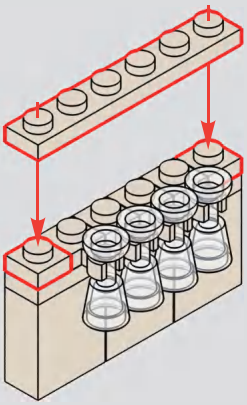

# 134

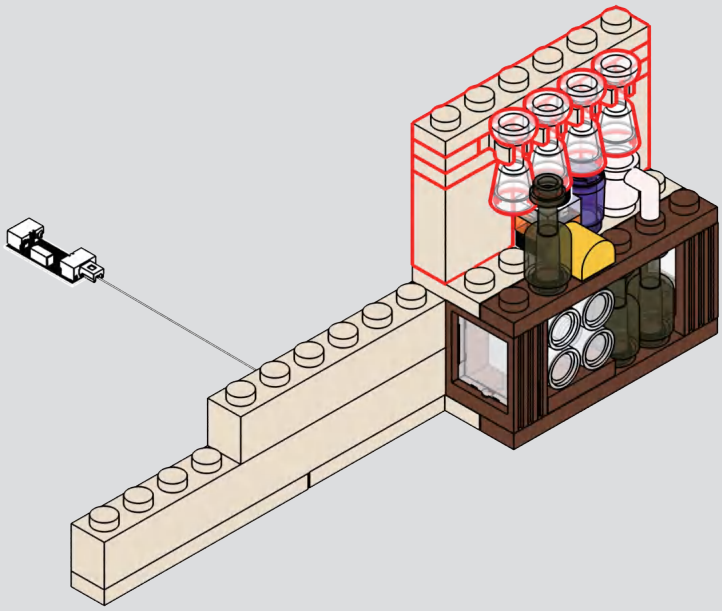

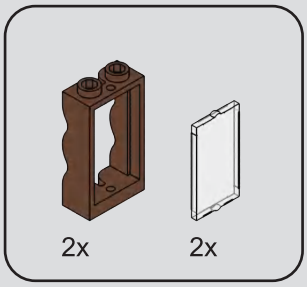


# 135

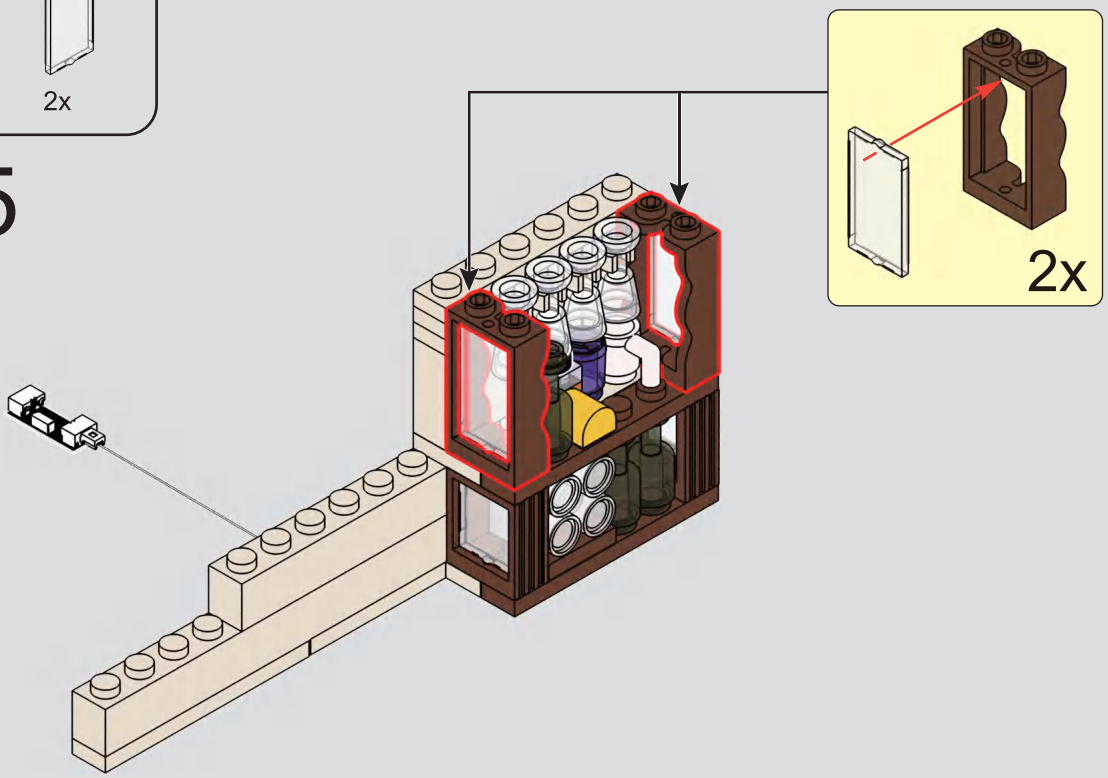

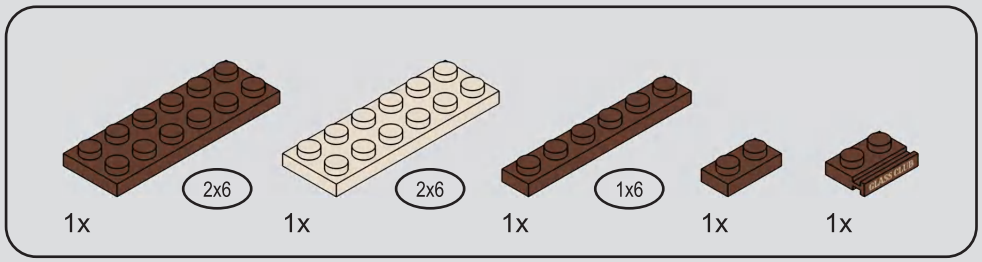


# 136

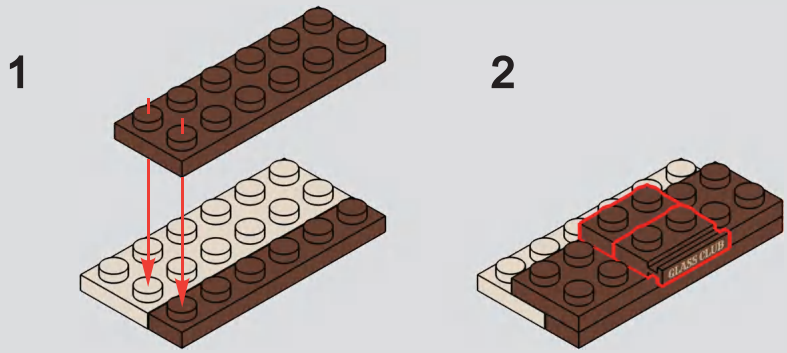


---

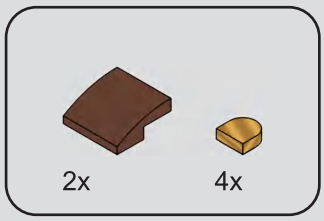


# 137

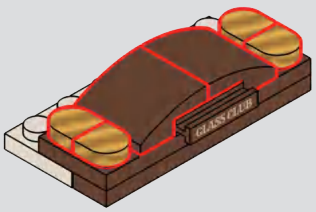

# 138

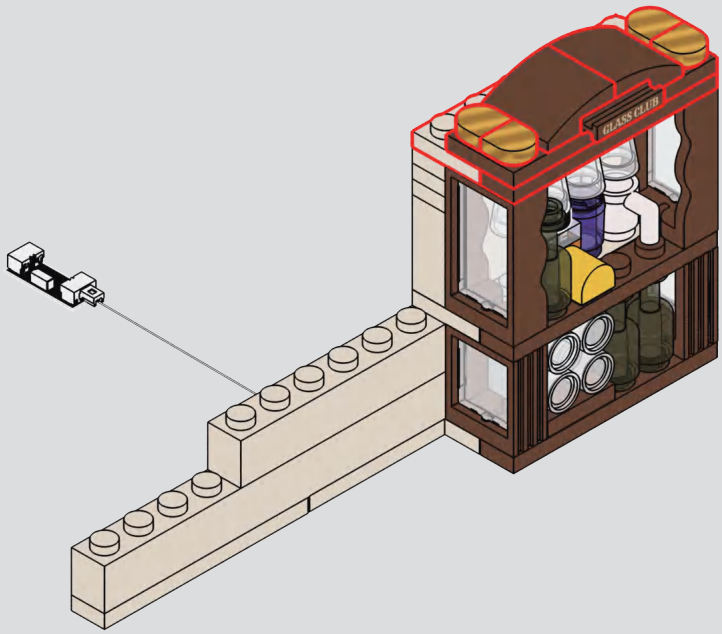


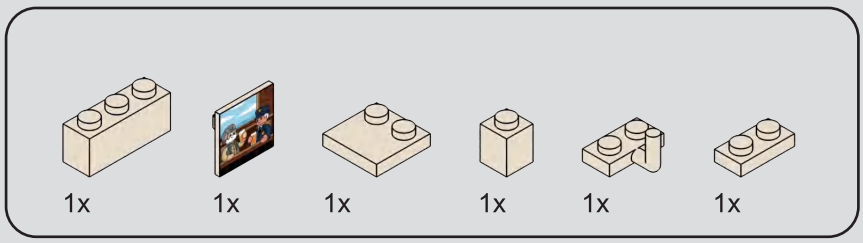


# 139

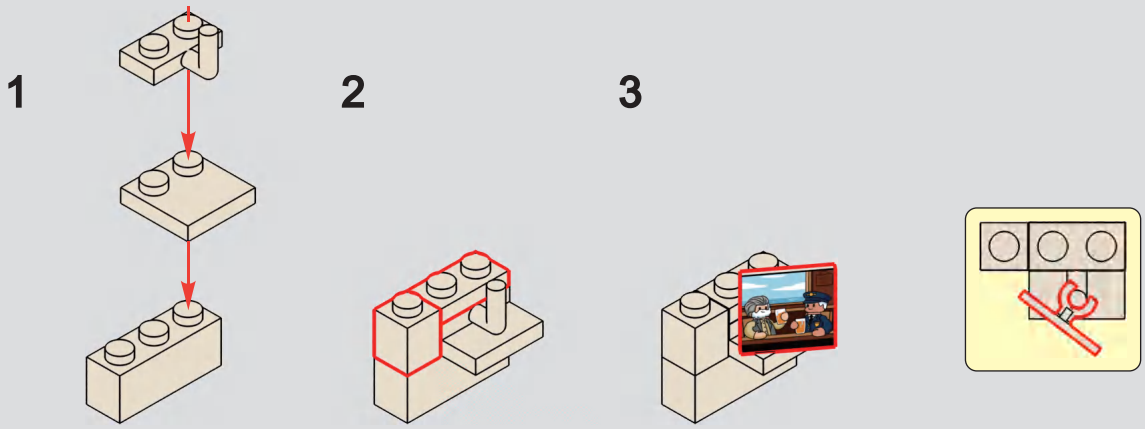

# 140

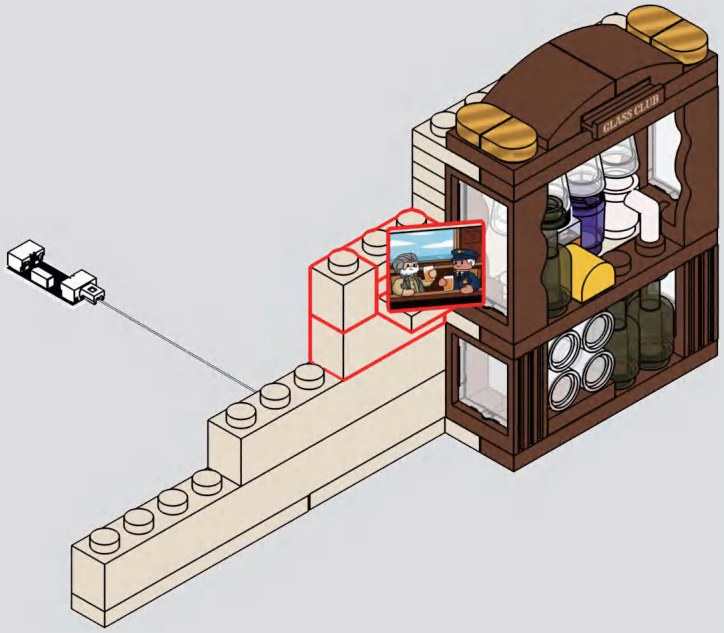


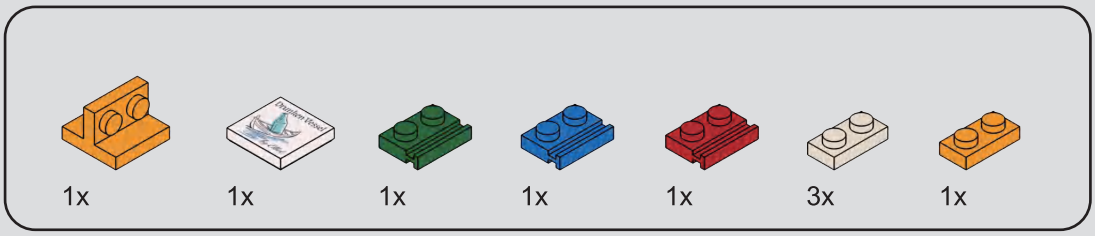


# 141

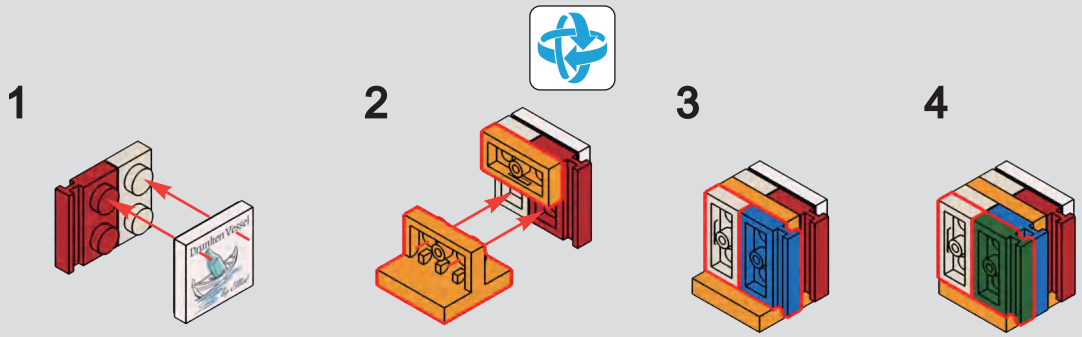

142

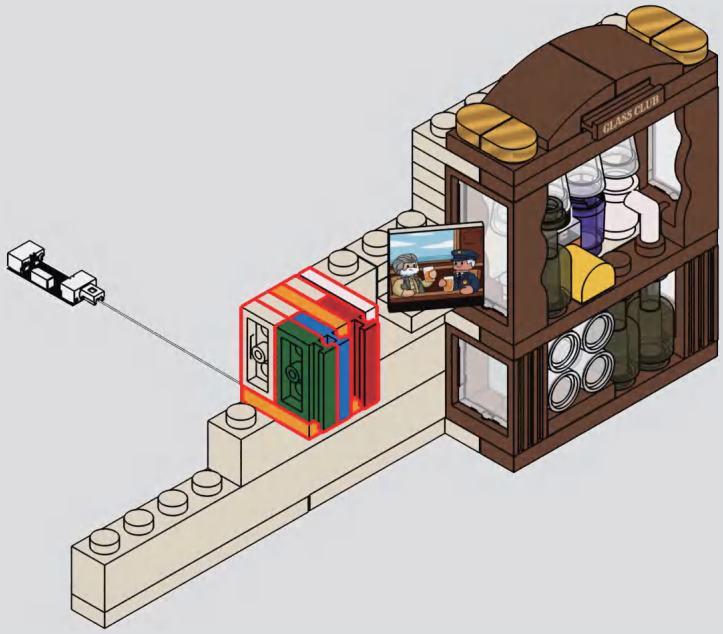

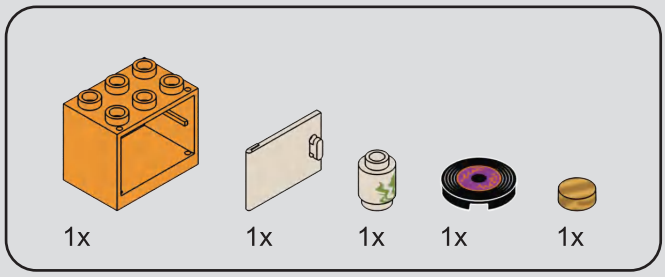


# 143

1

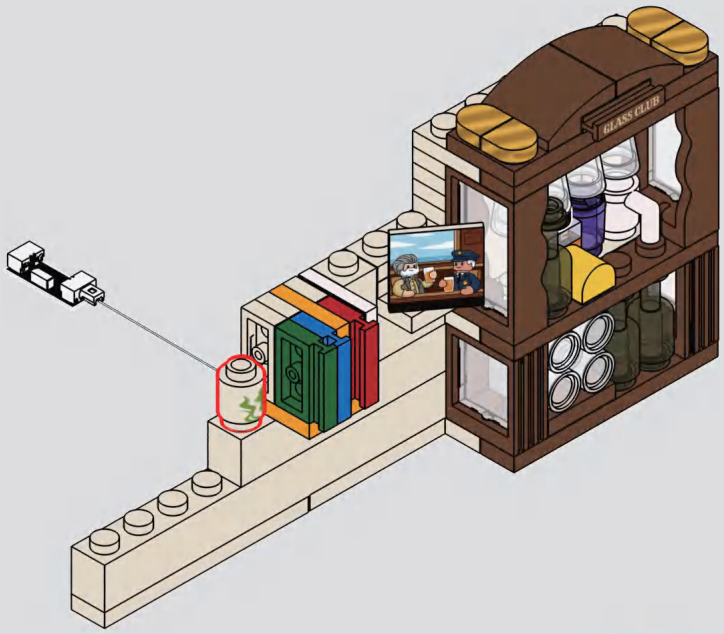


2

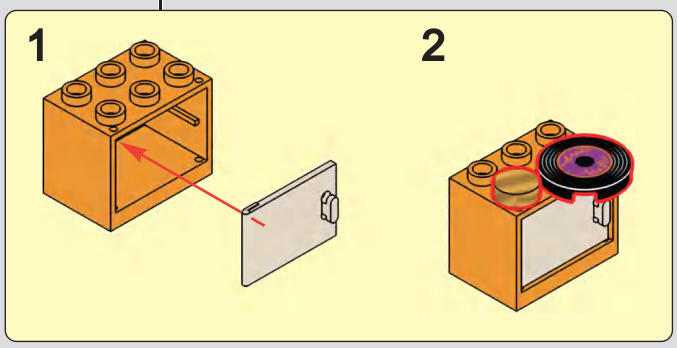

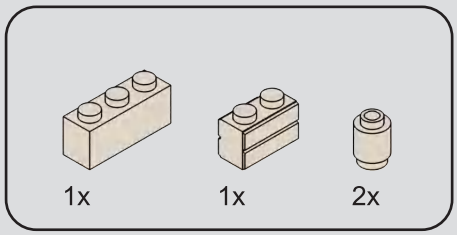


# 144

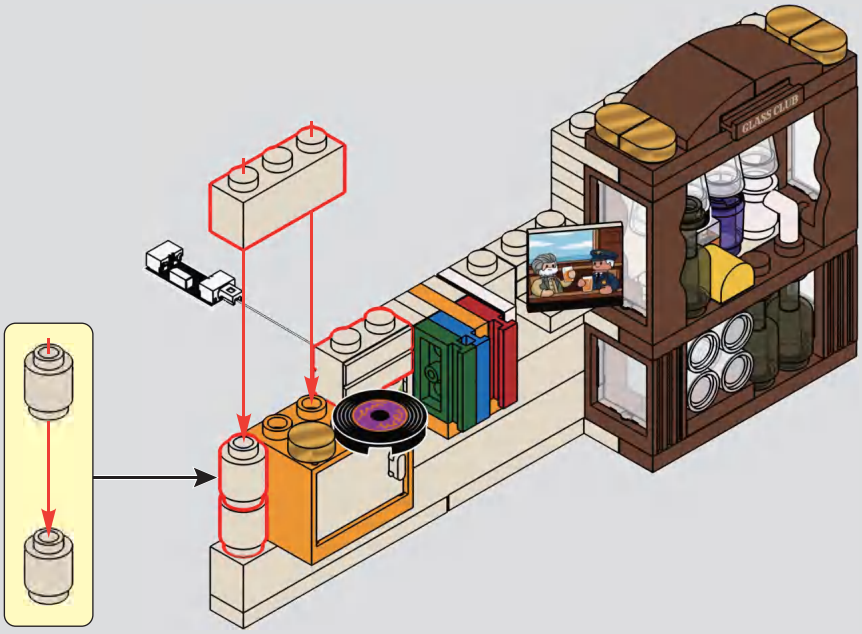

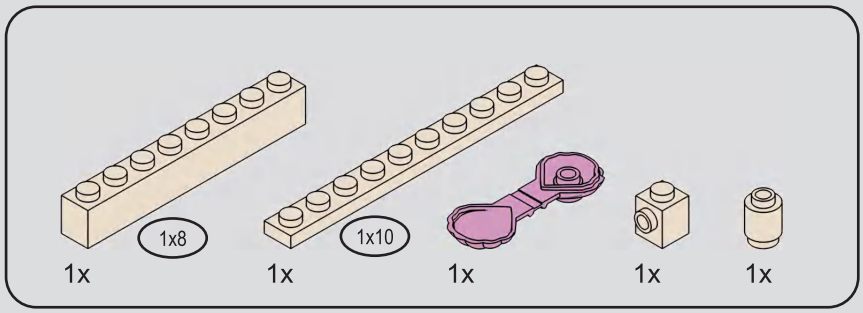


# 145

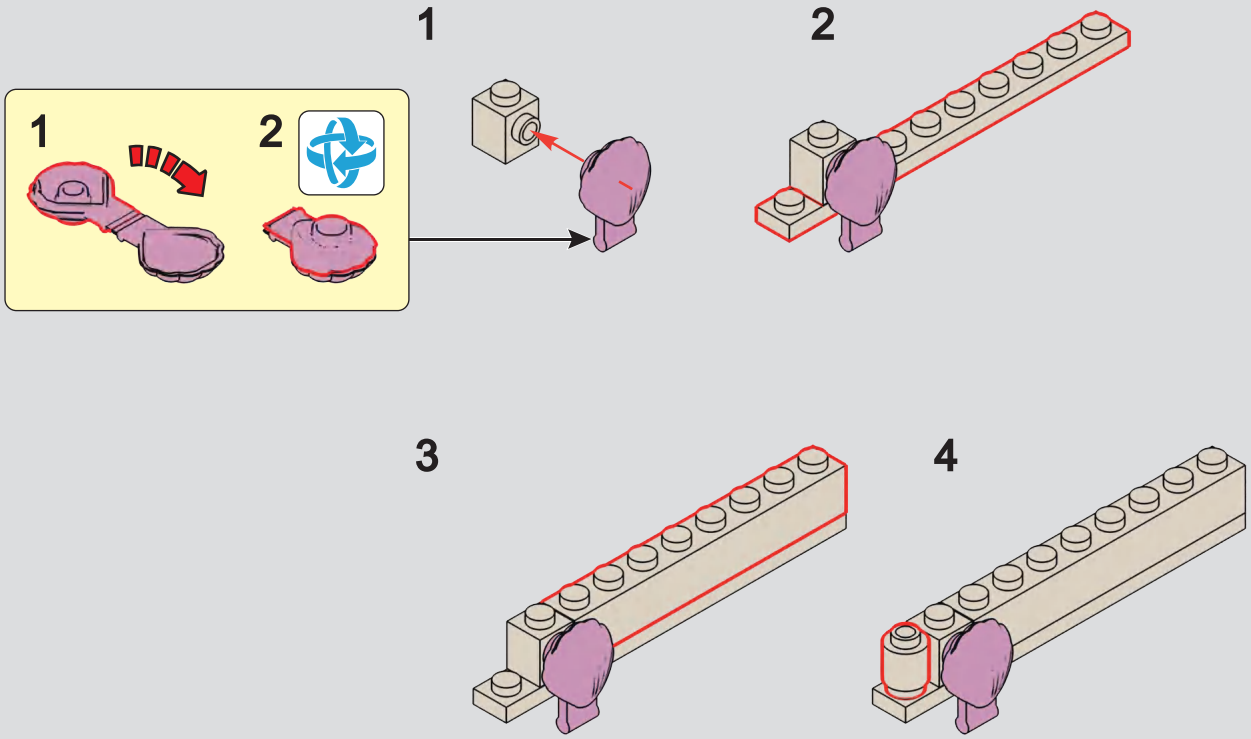


# 146

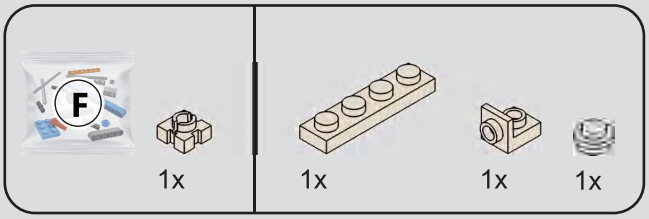


# 147

1

2

3

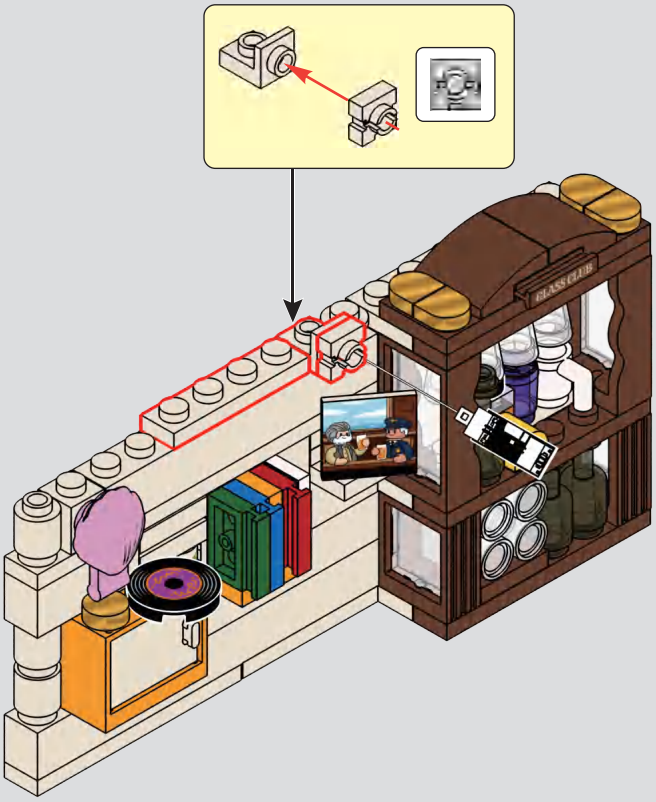

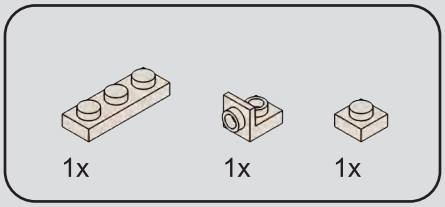


# 148

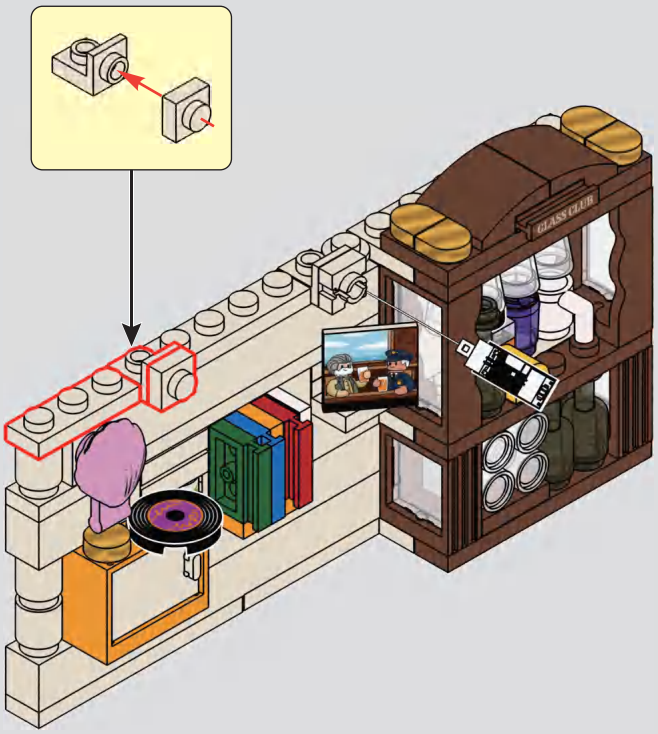

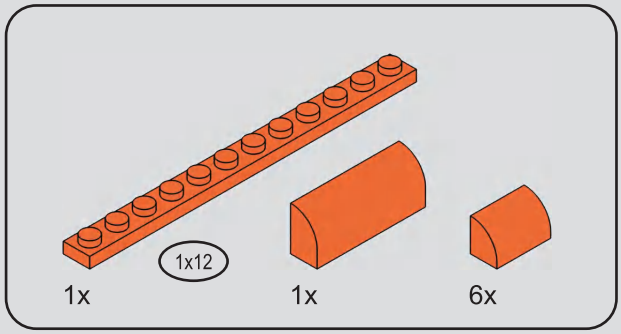


# 149

1

2

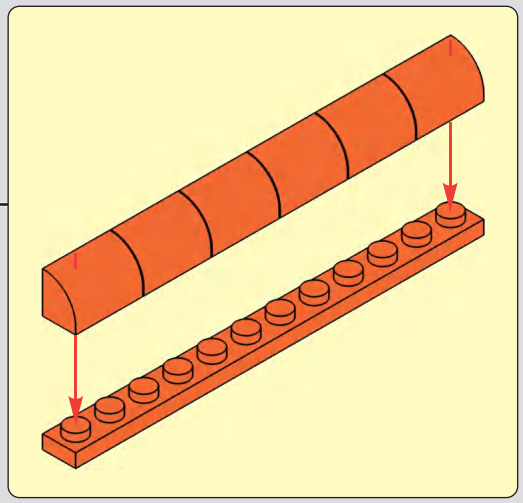

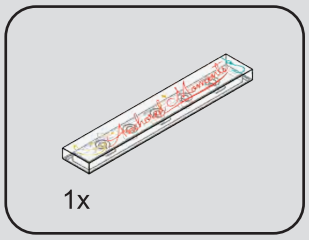


150

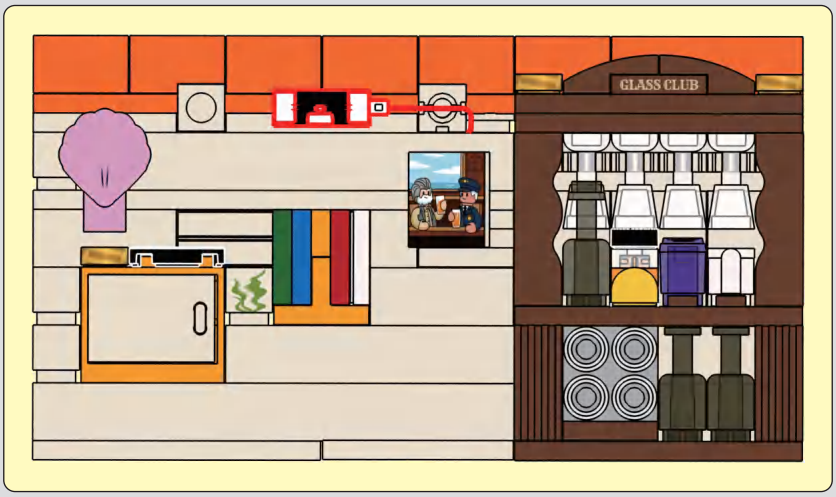


1

2

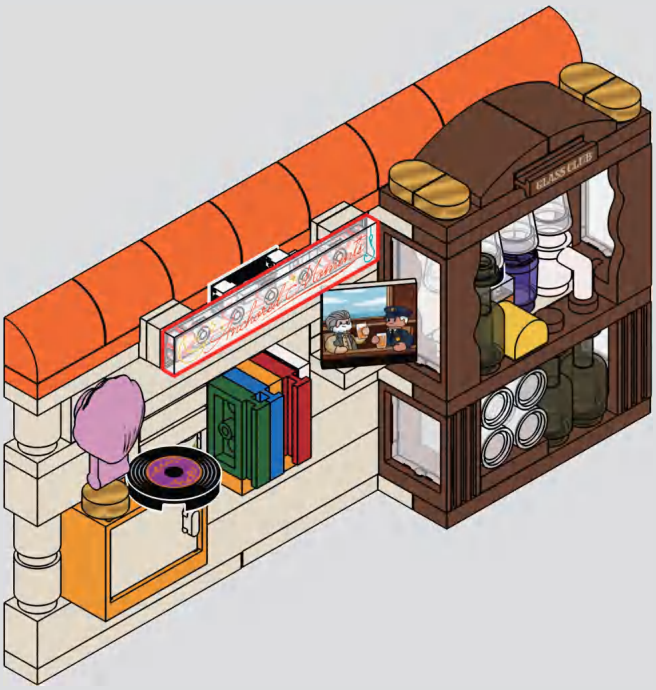

# 151

1

2

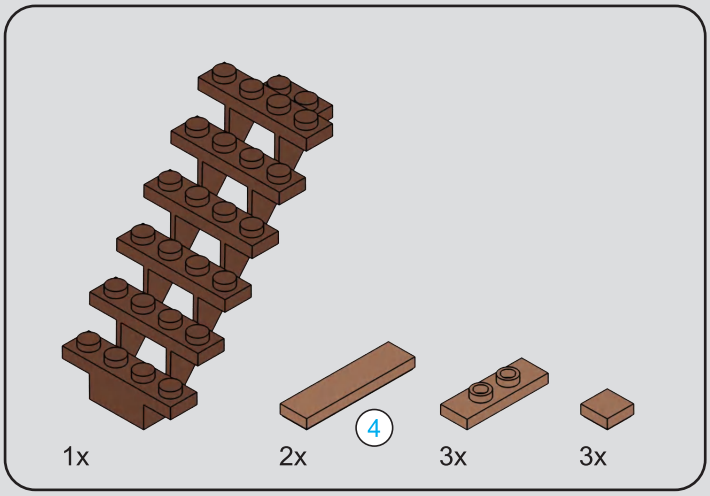

# 152

1

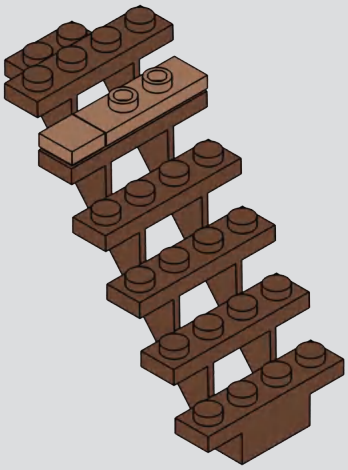

2

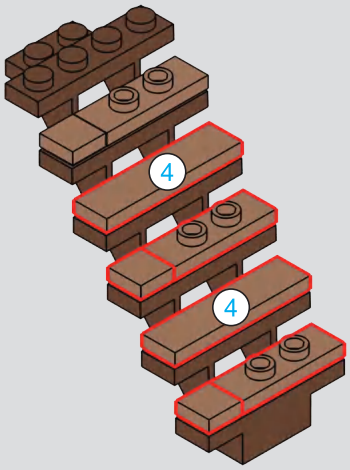


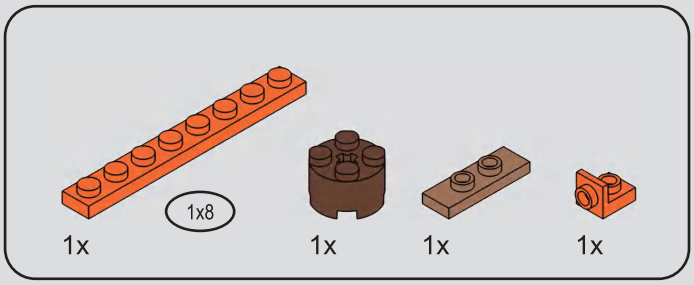


# 153

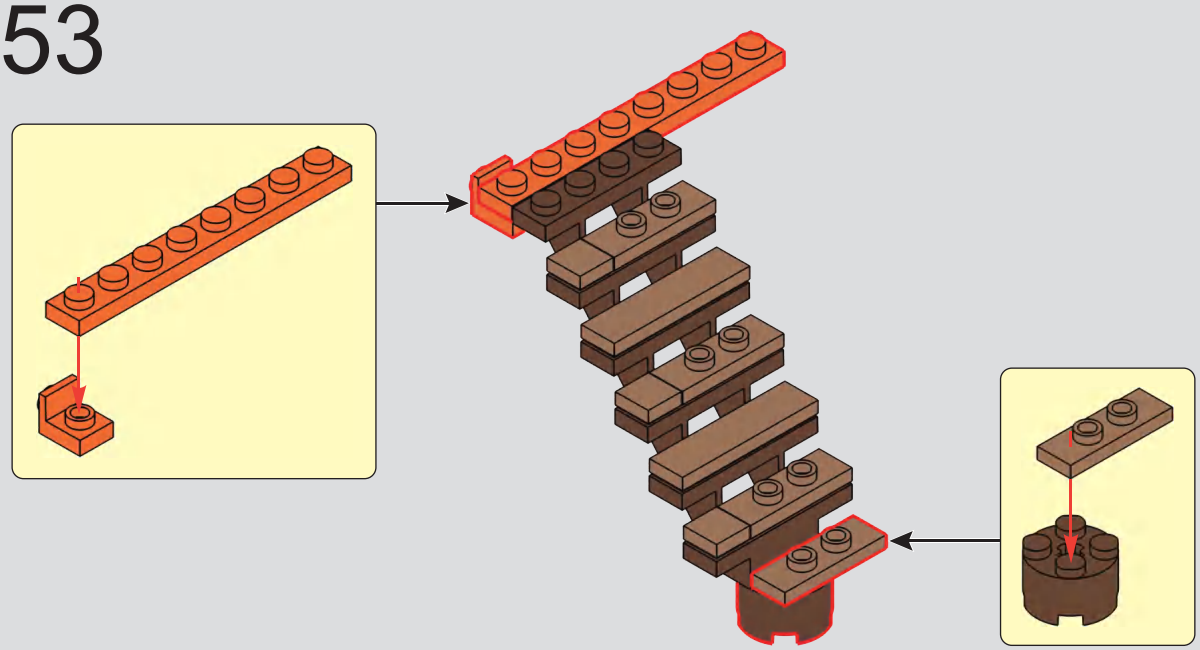

154

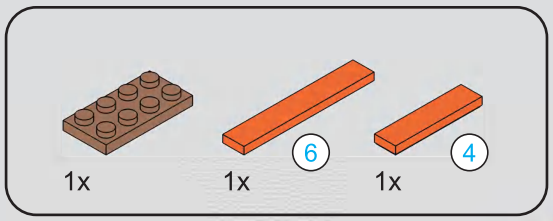


6 1:1

4 1:1

# 155

1

2

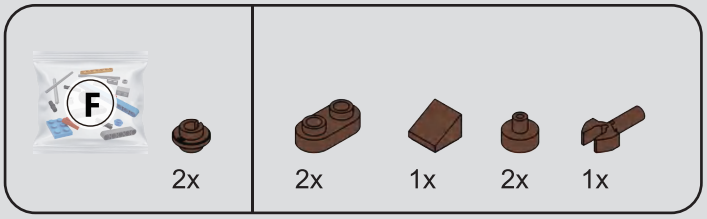


# 156

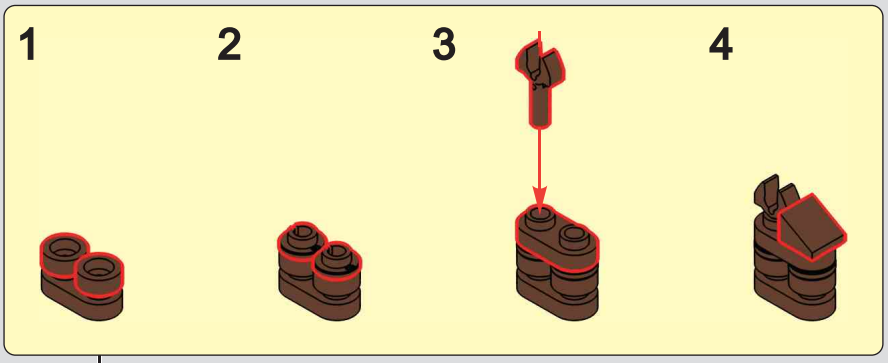

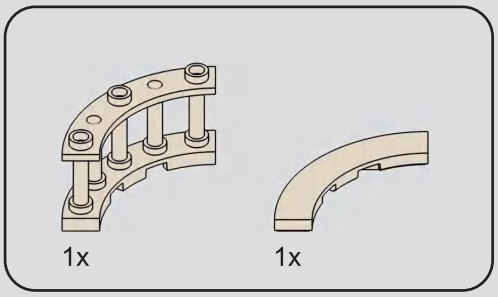


# 157

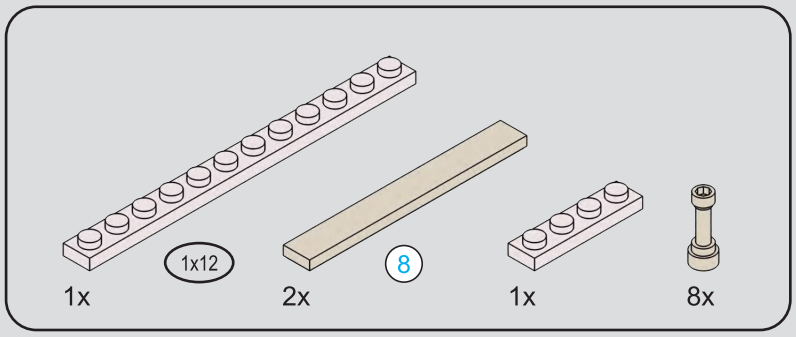


# 158

1

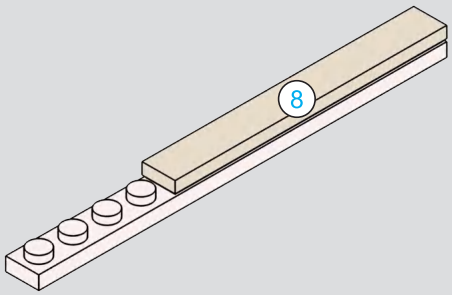


2

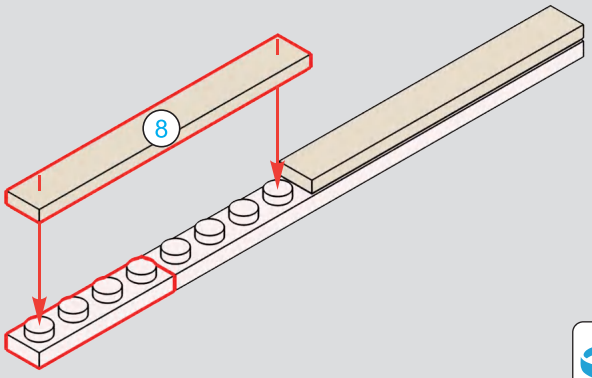


3

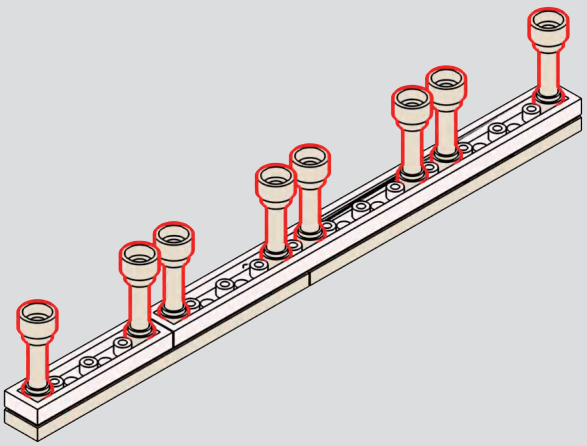

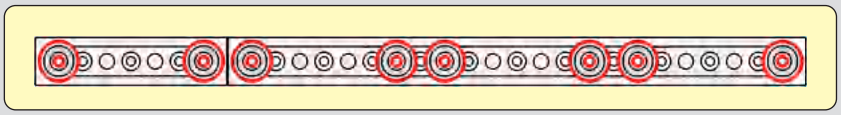

8 1:1

159

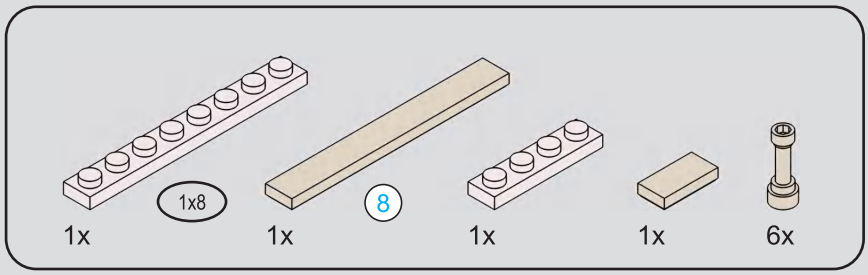


# 160

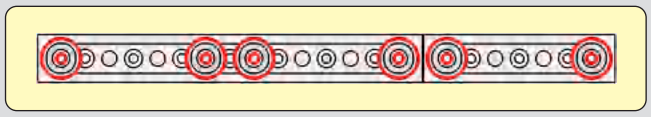

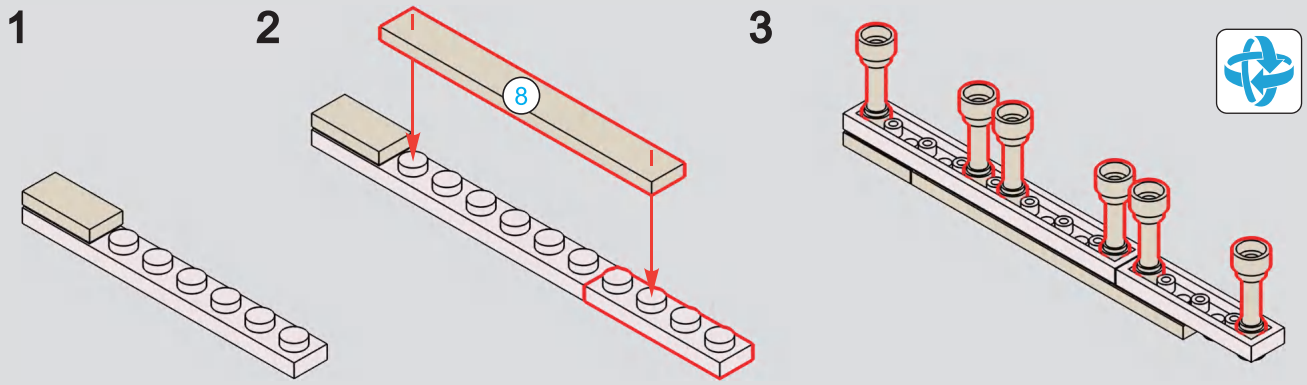

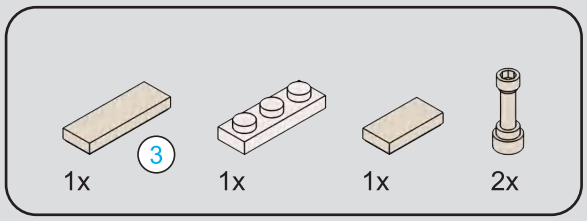


# 161

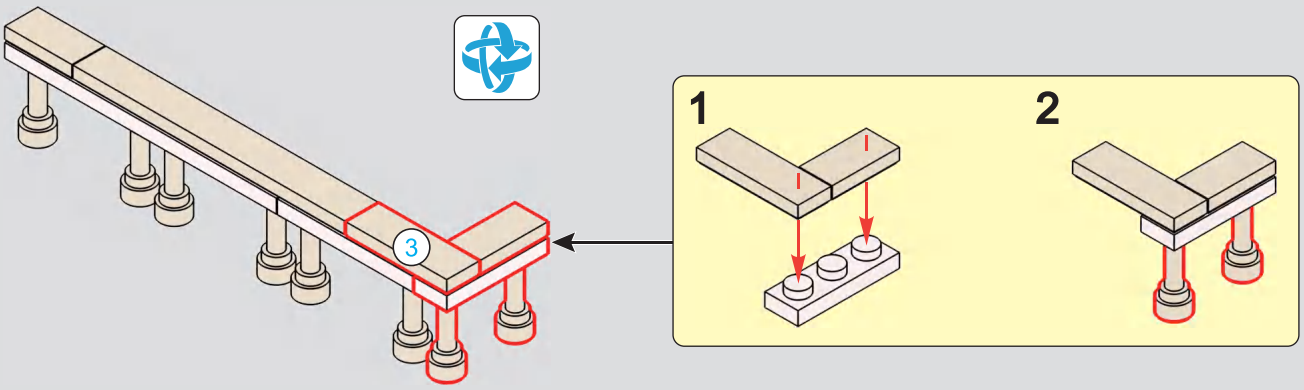

162

# 163

1

## 2

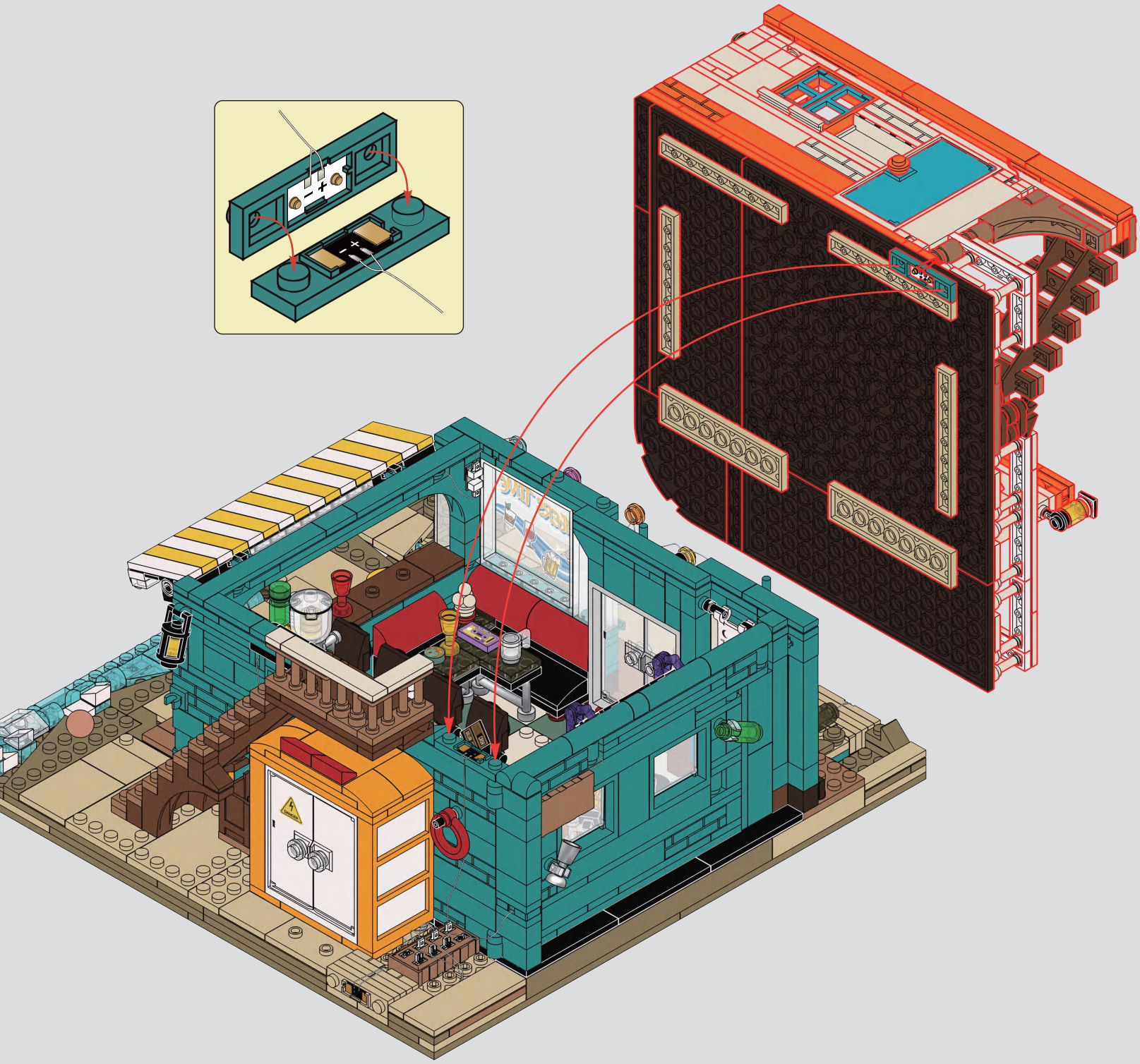

3

4
NO MORE MUSIC?
NO MORE MUSIC!
DANGER

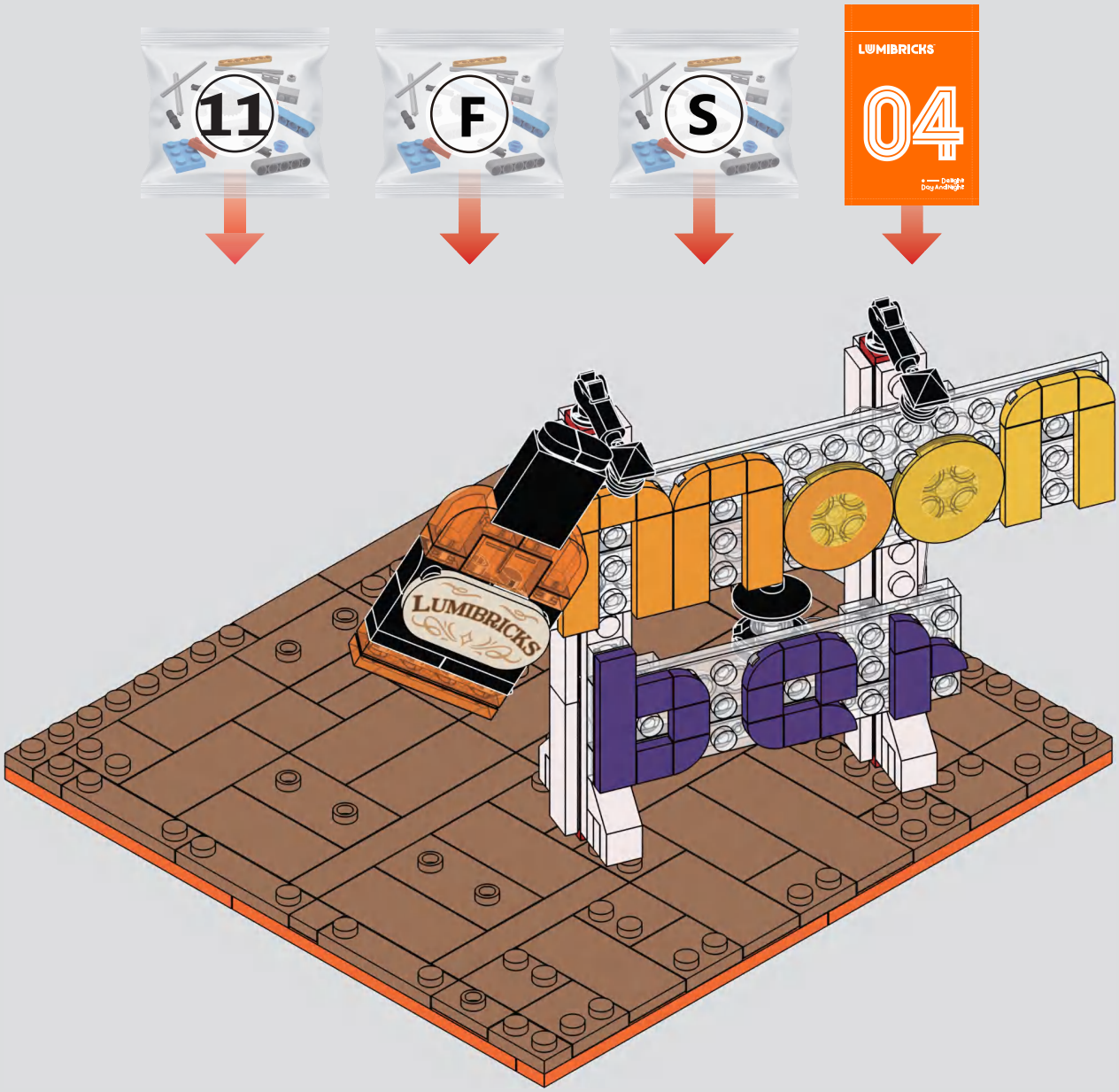
11
F
S
LUMIBRICKS
04
LUMIBRICKS
LUMIBRICKS

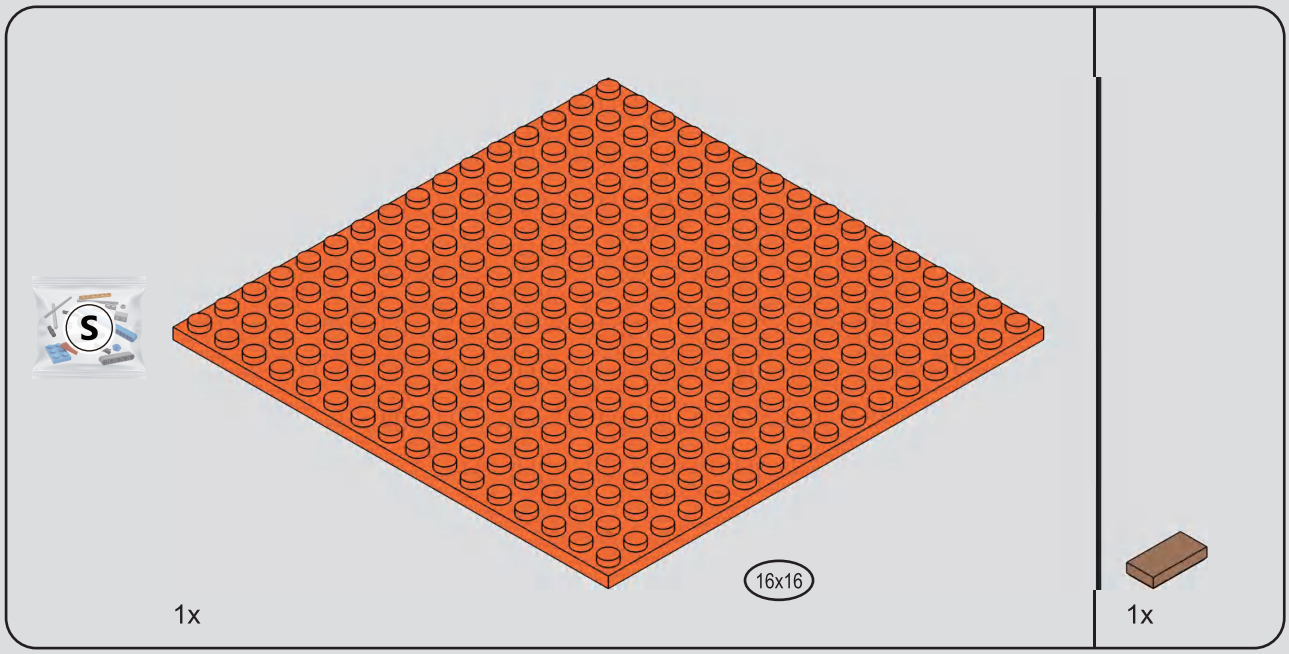


# 164

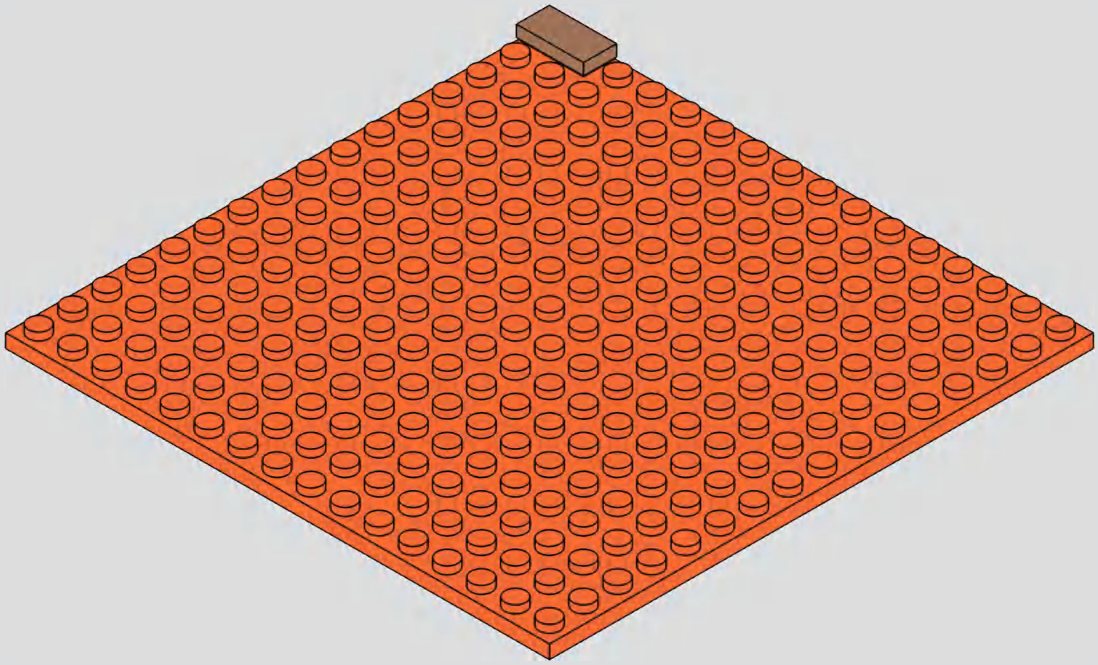

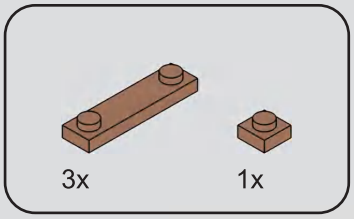


# 165

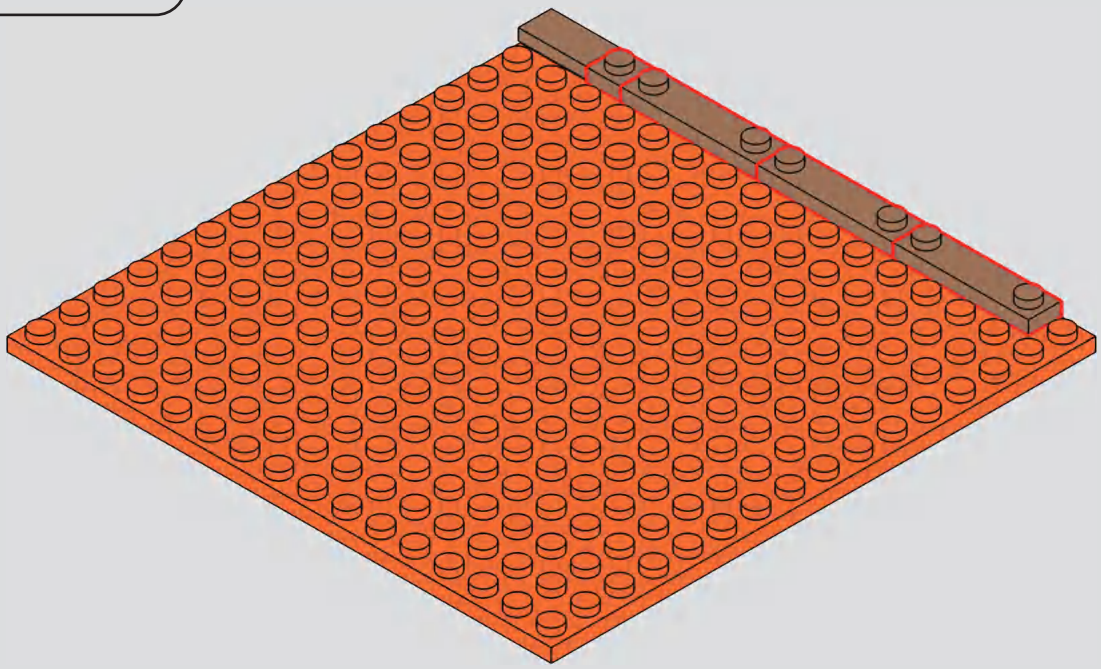

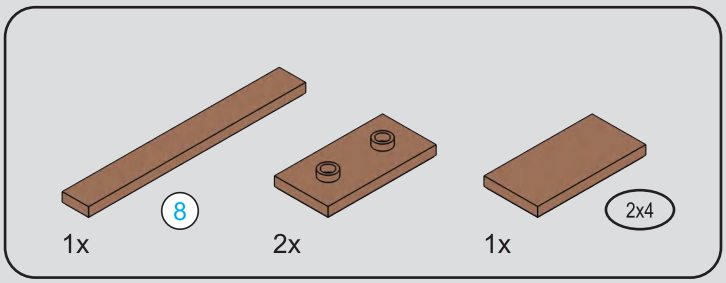


# 166

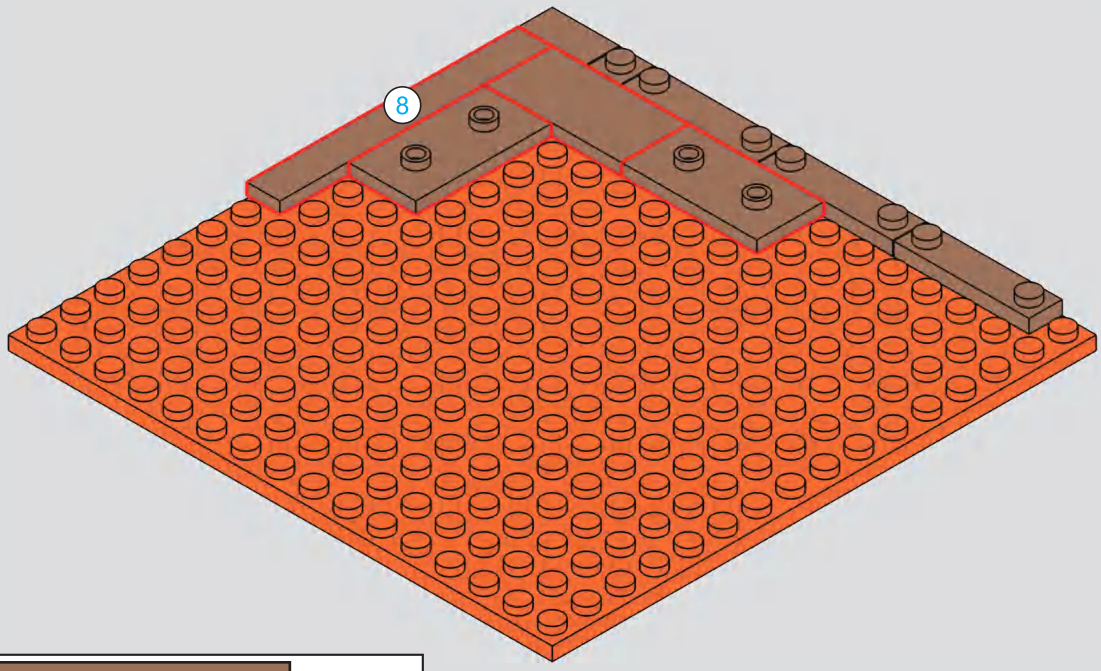

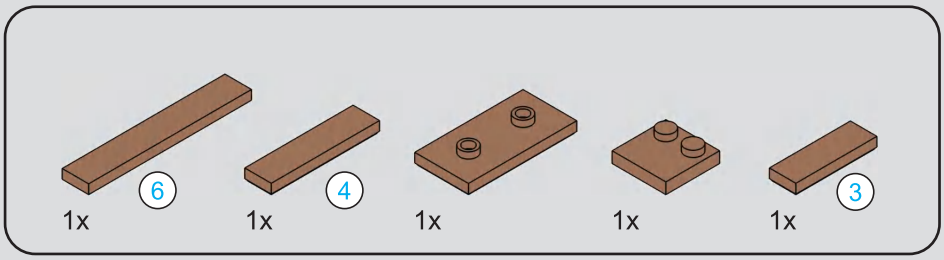


# 167

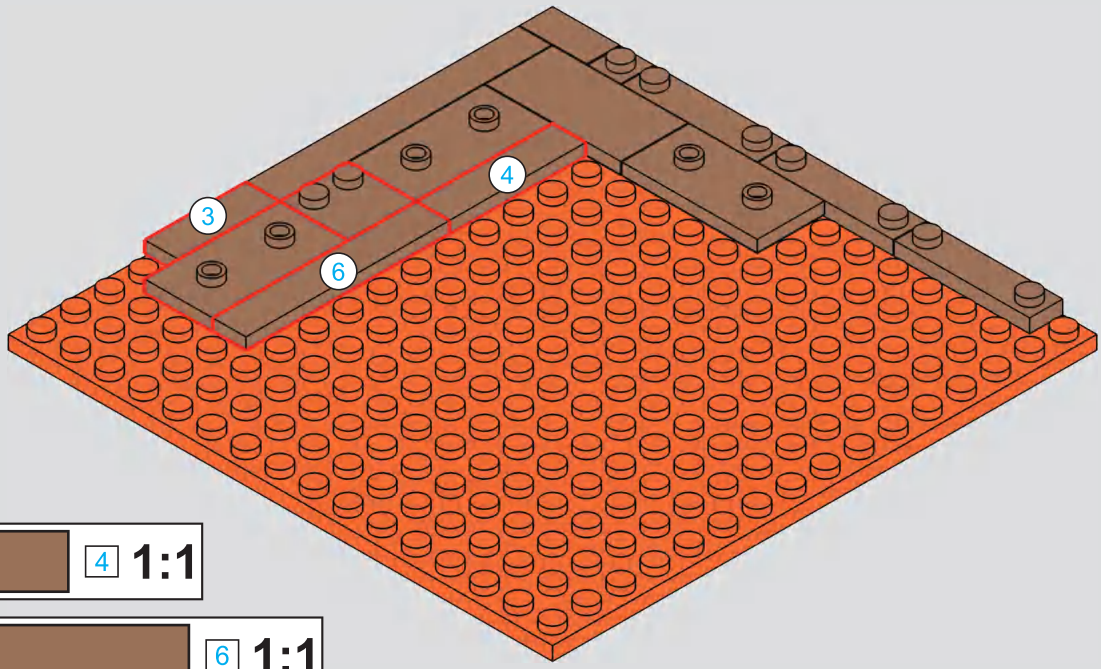


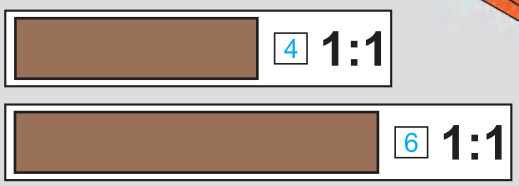


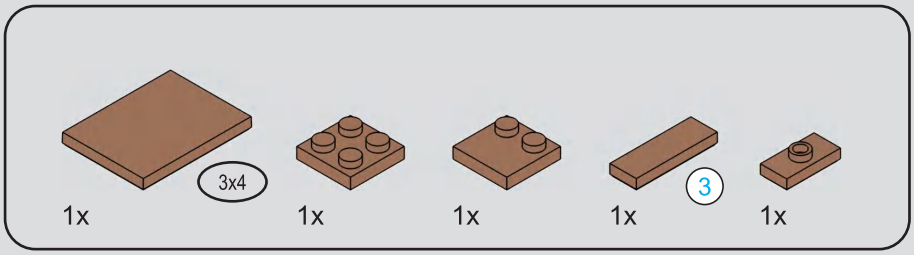


# 168

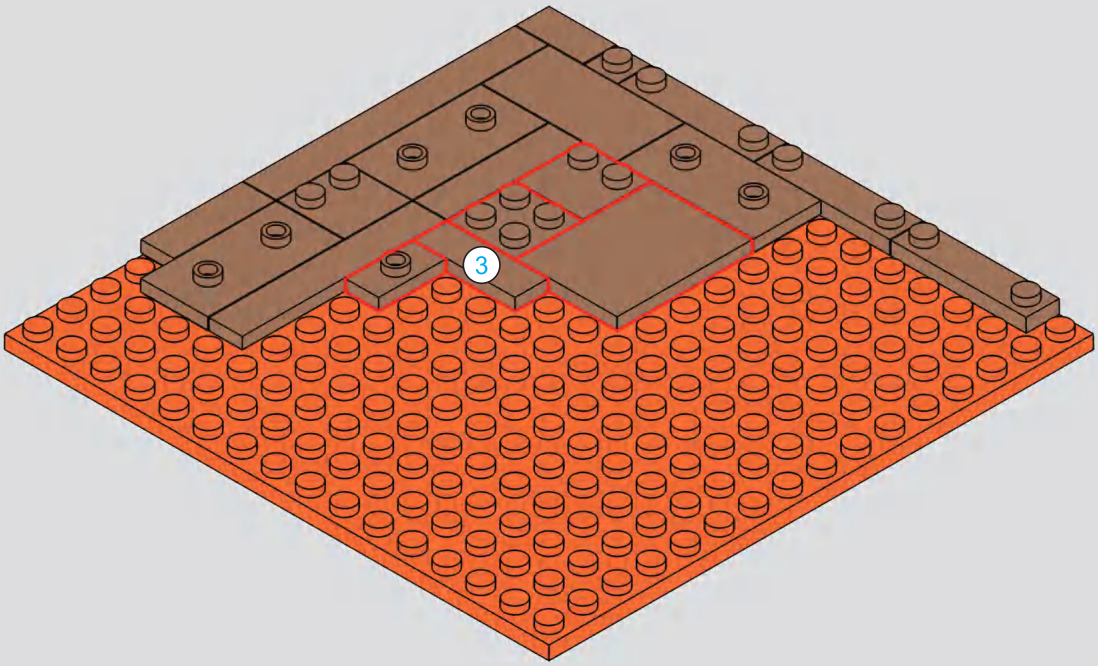

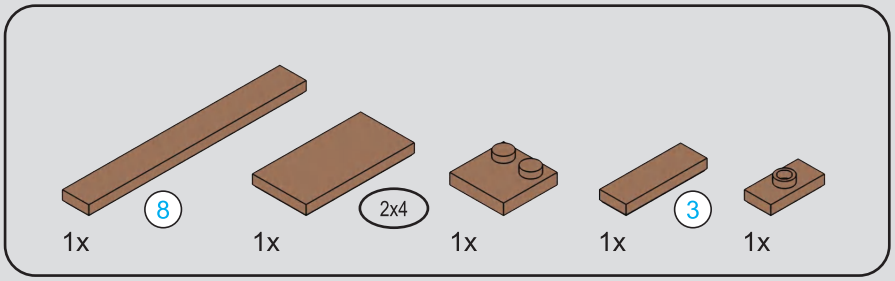


# 169

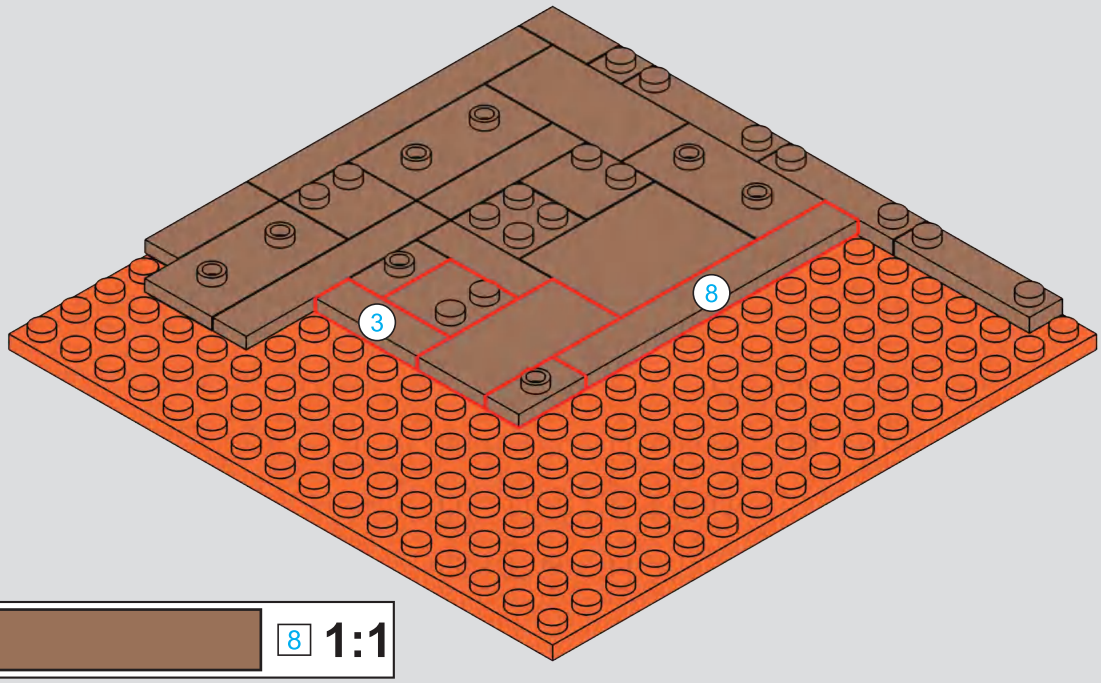

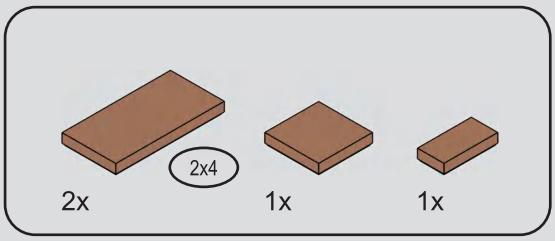


# 170

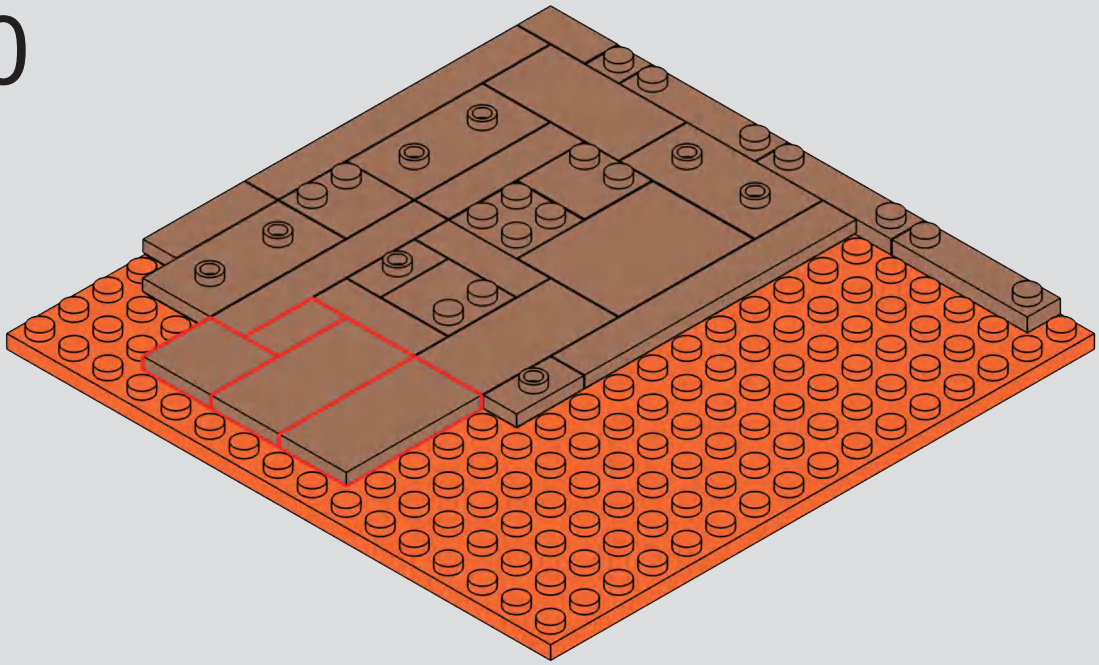

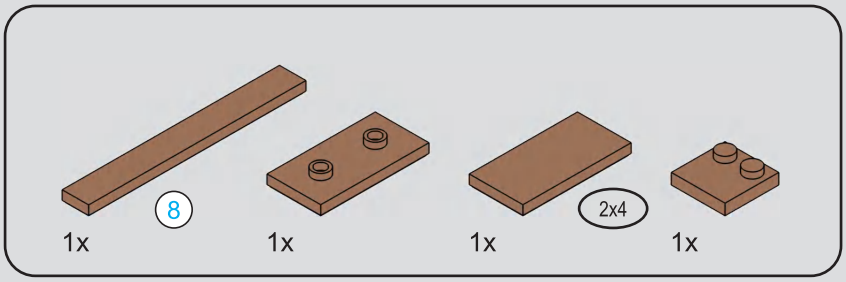


# 171

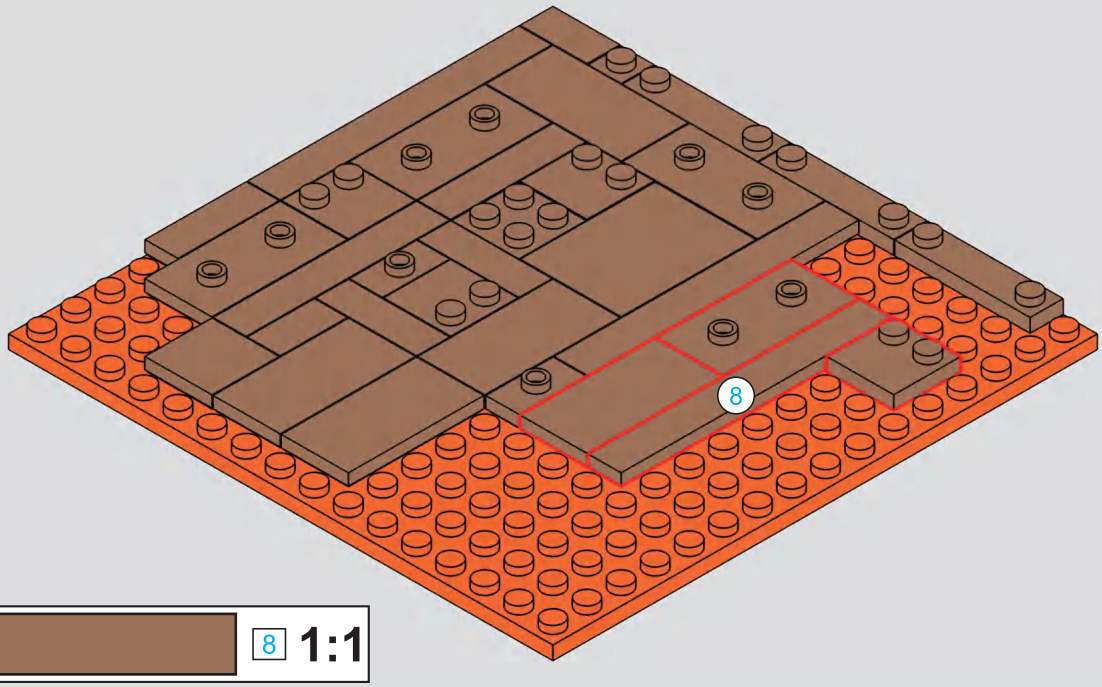

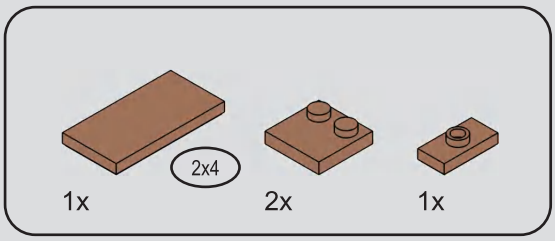


# 172

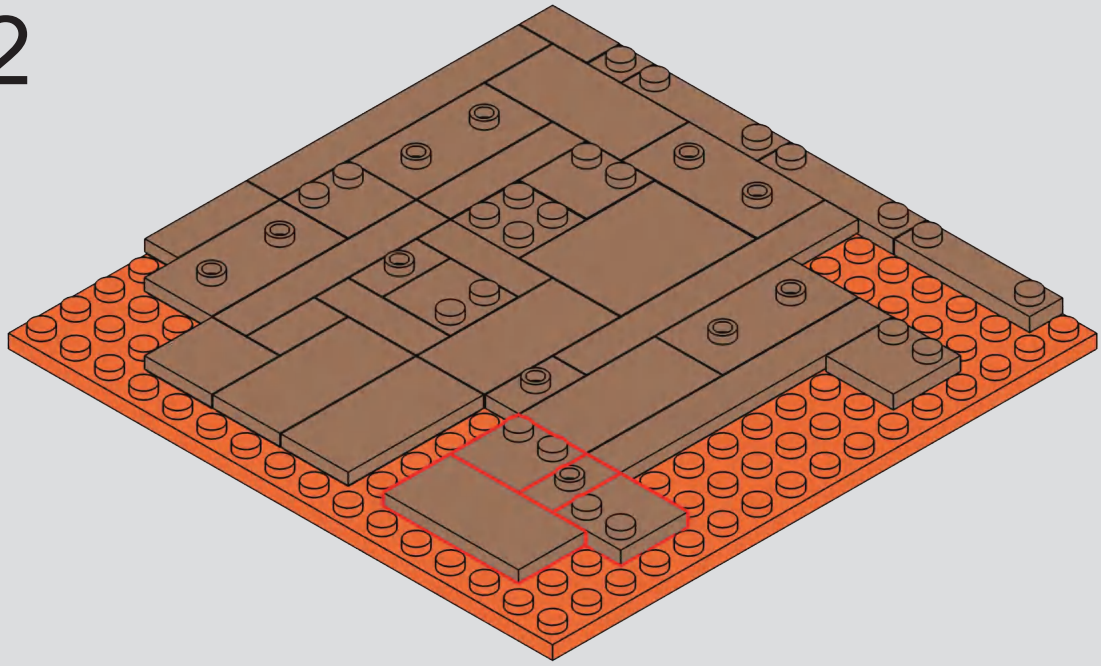

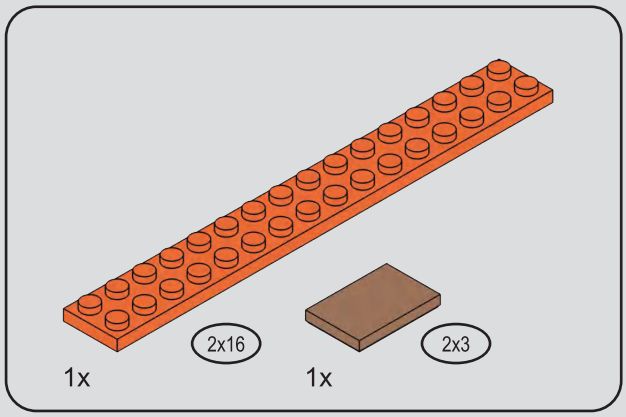


# 173

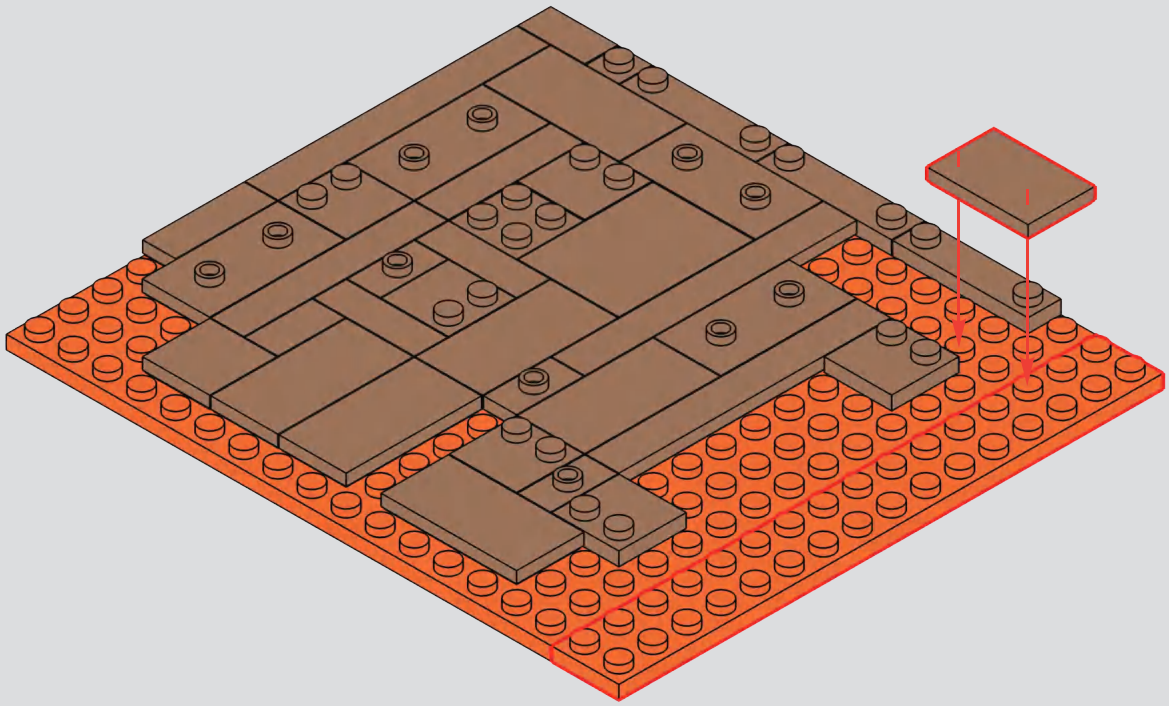

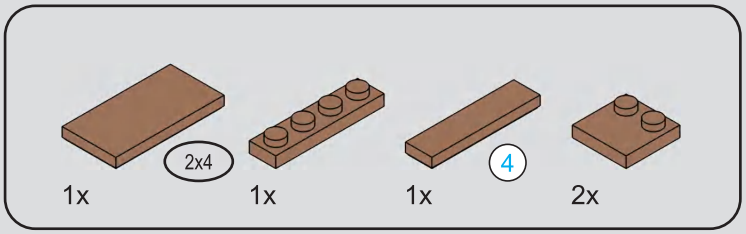

# 174

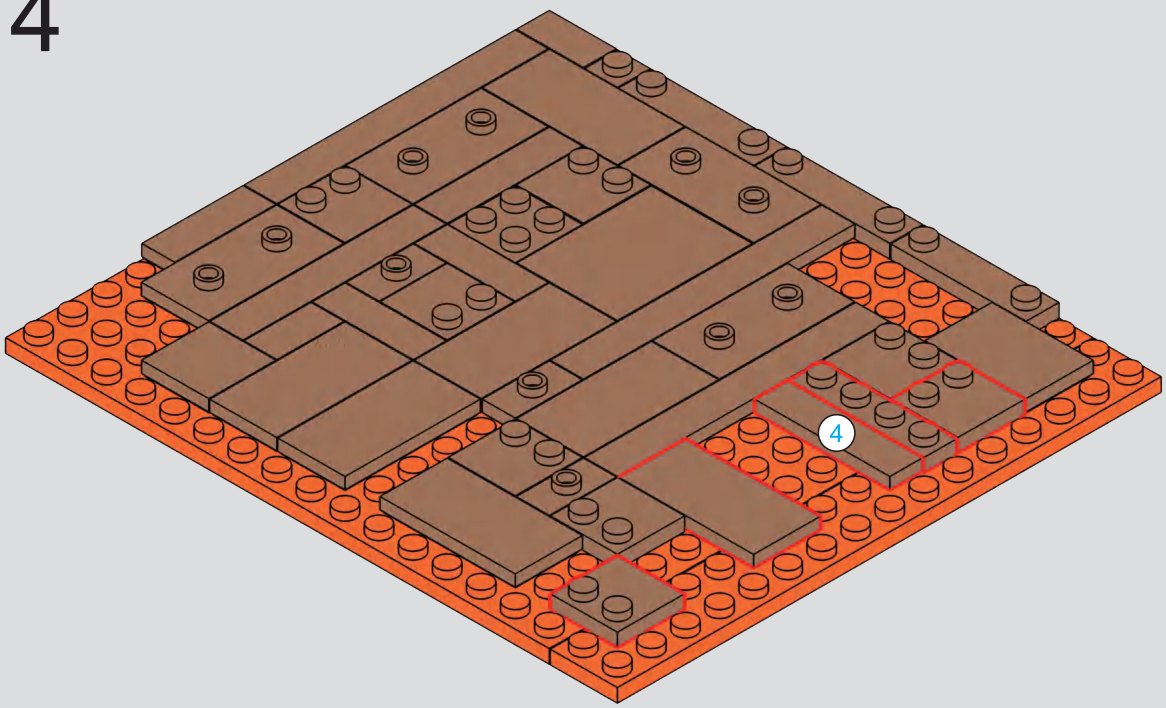


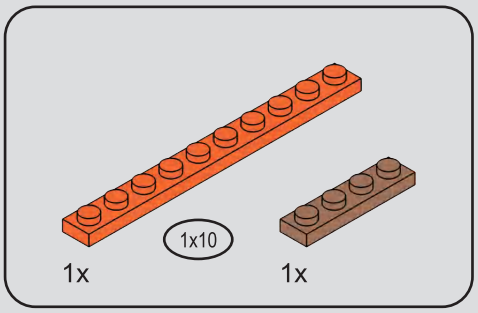


# 175

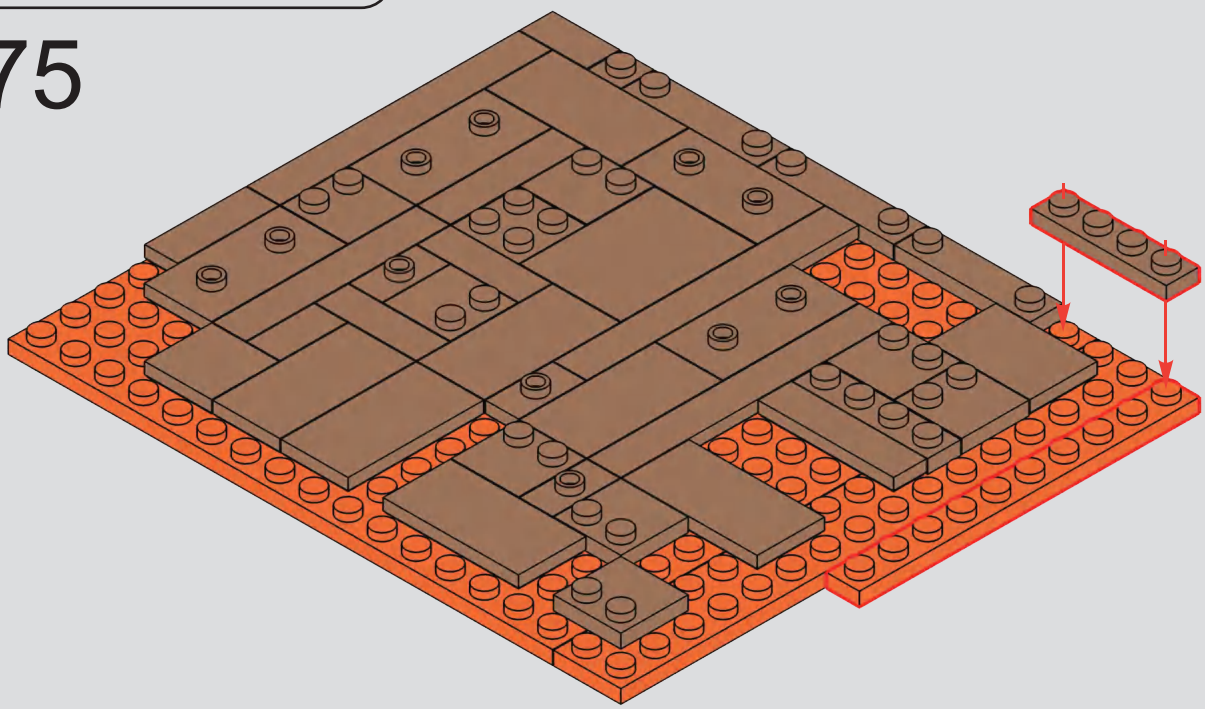

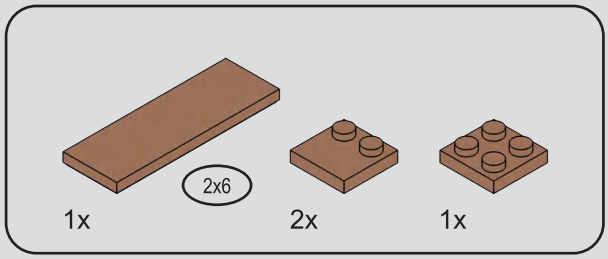


# 176

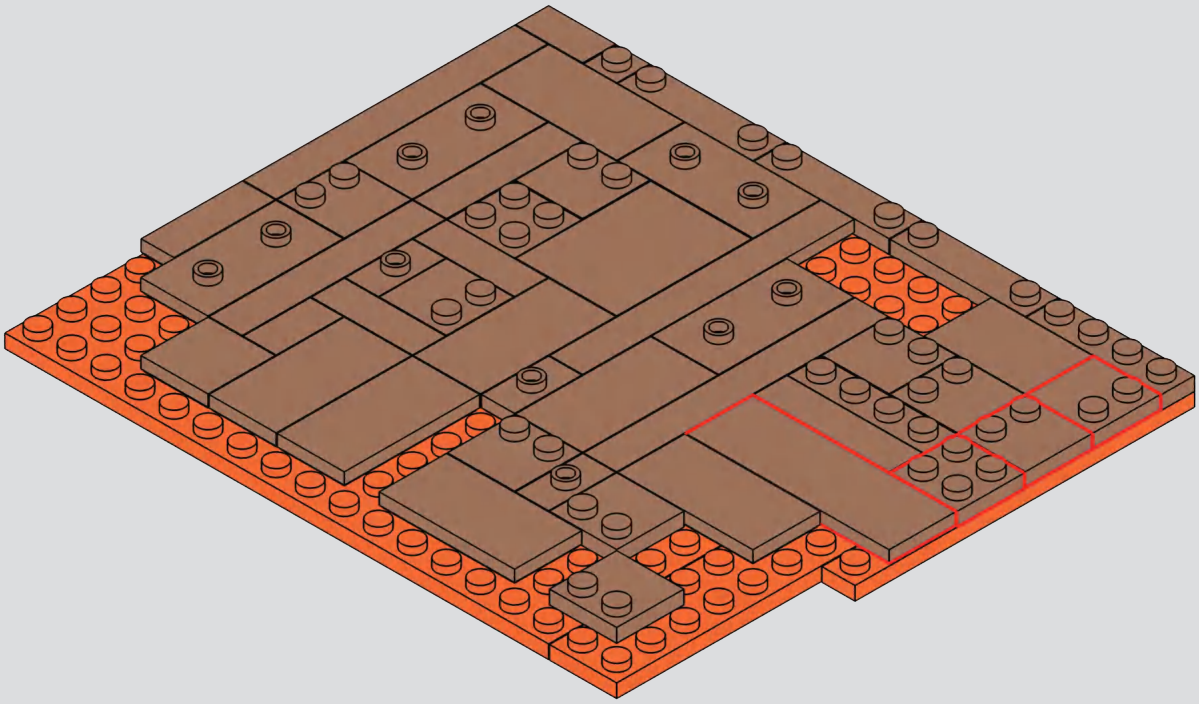

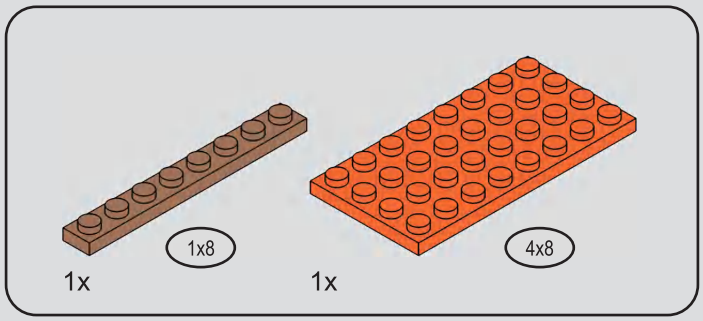


# 177

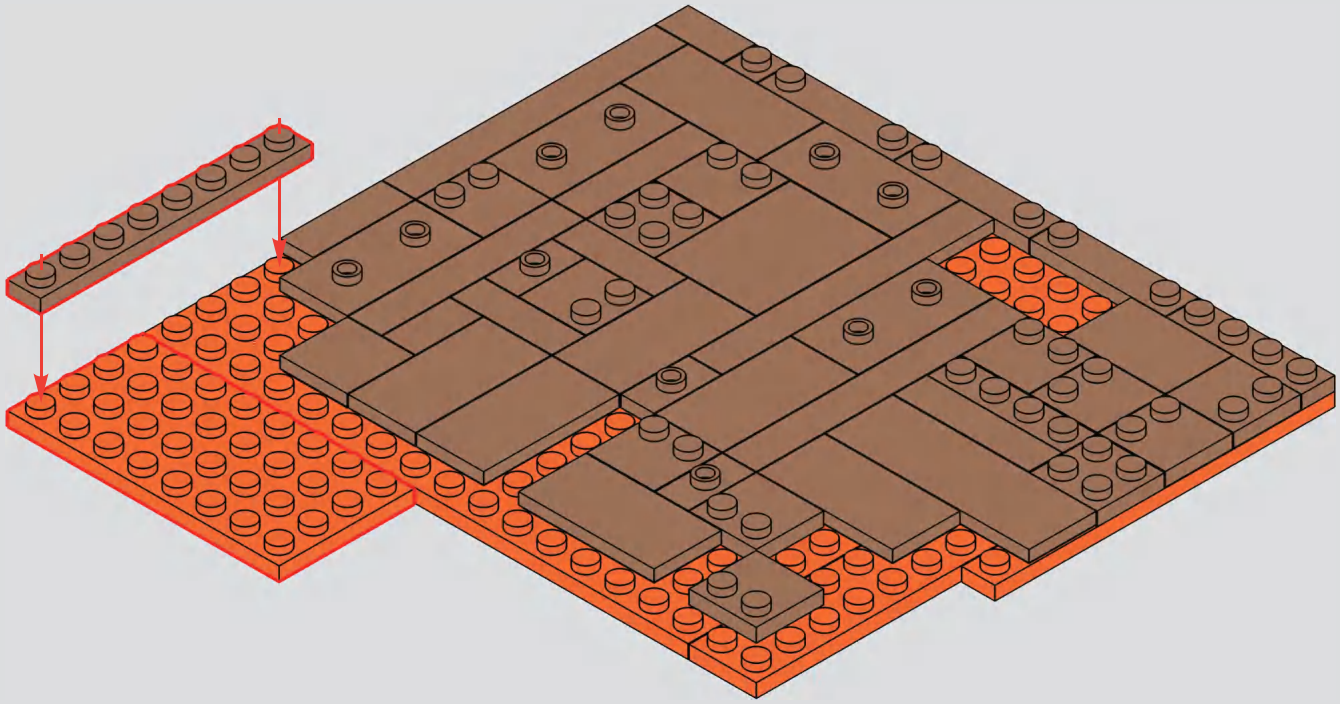

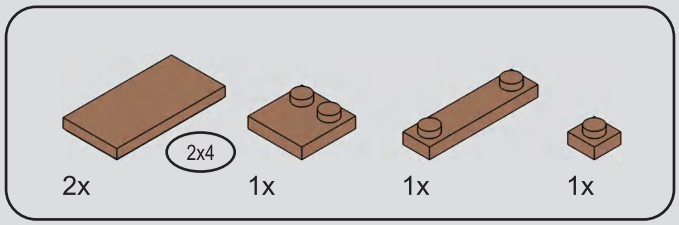


# 178

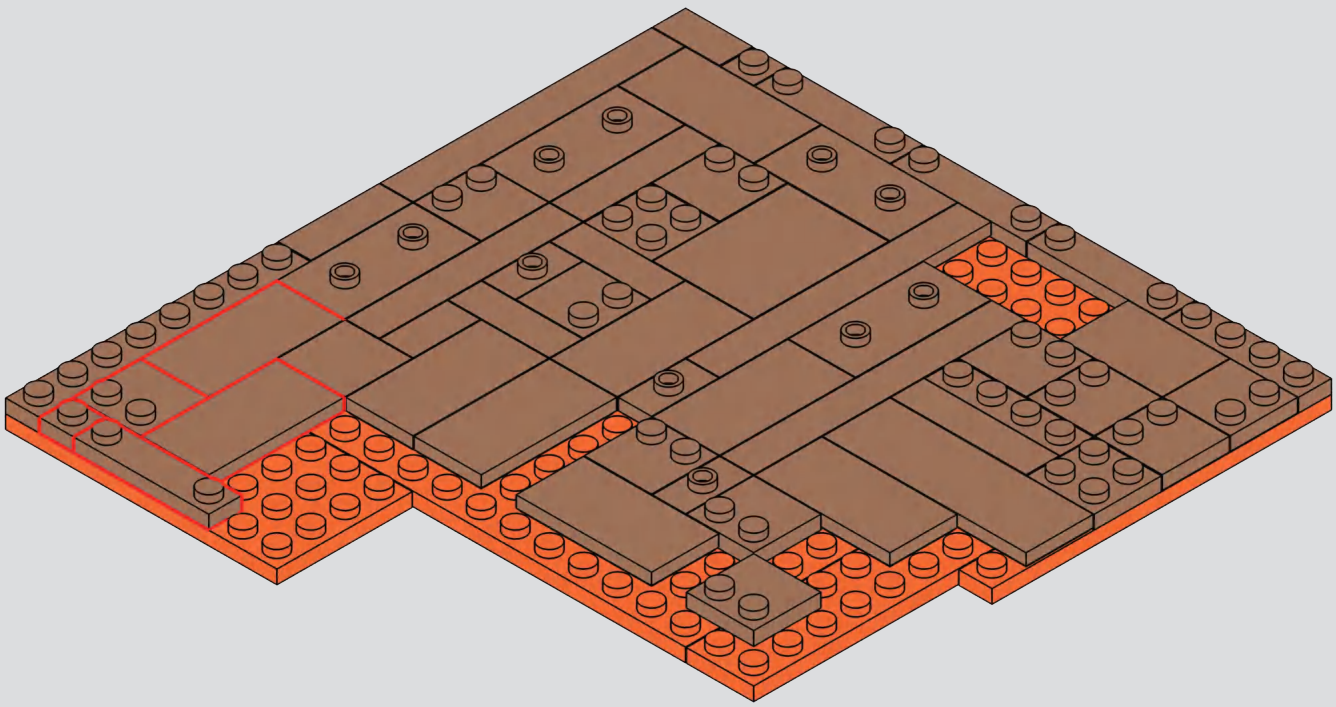

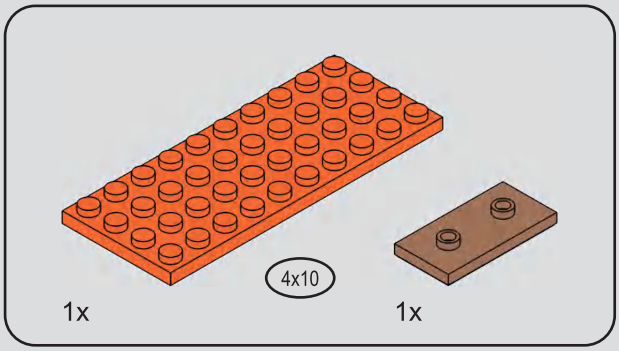


# 179

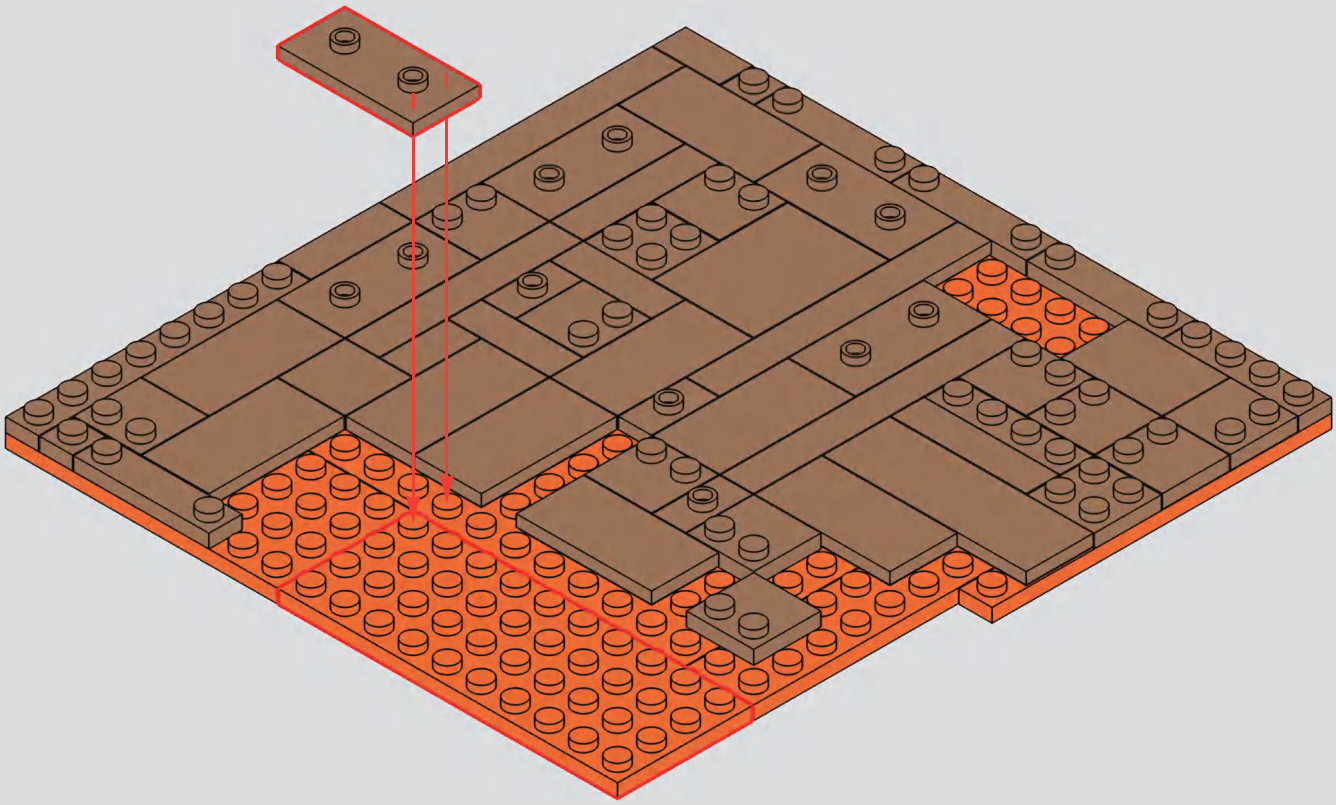

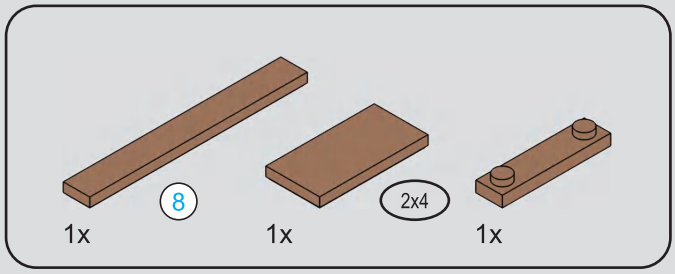

# 180

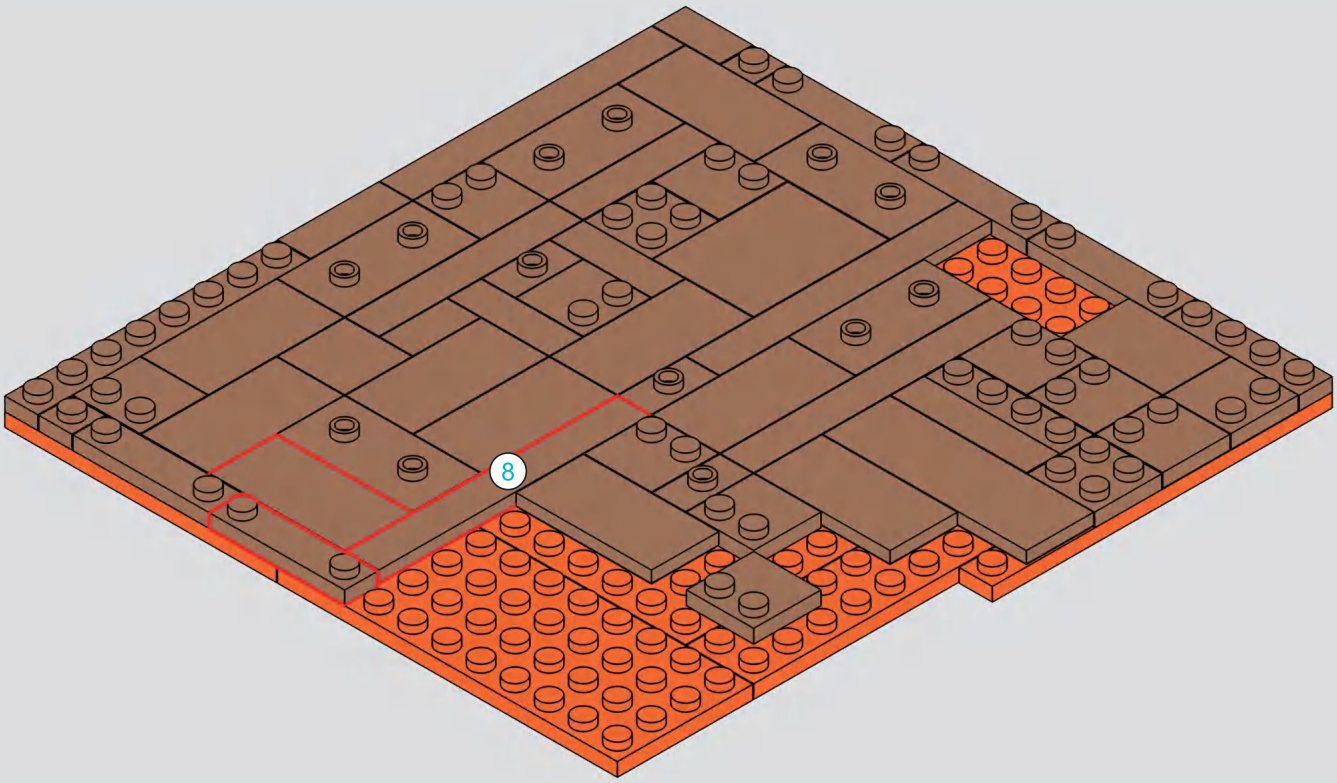

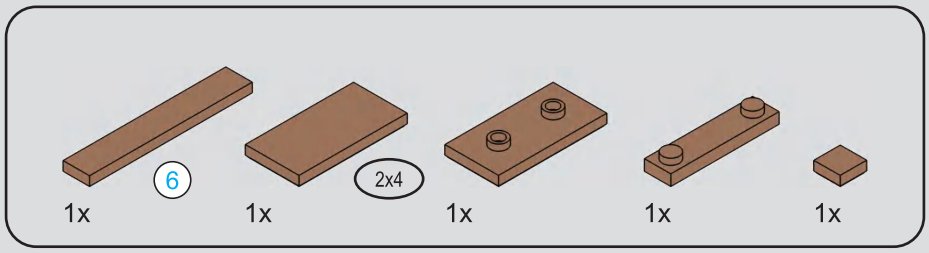


# 181

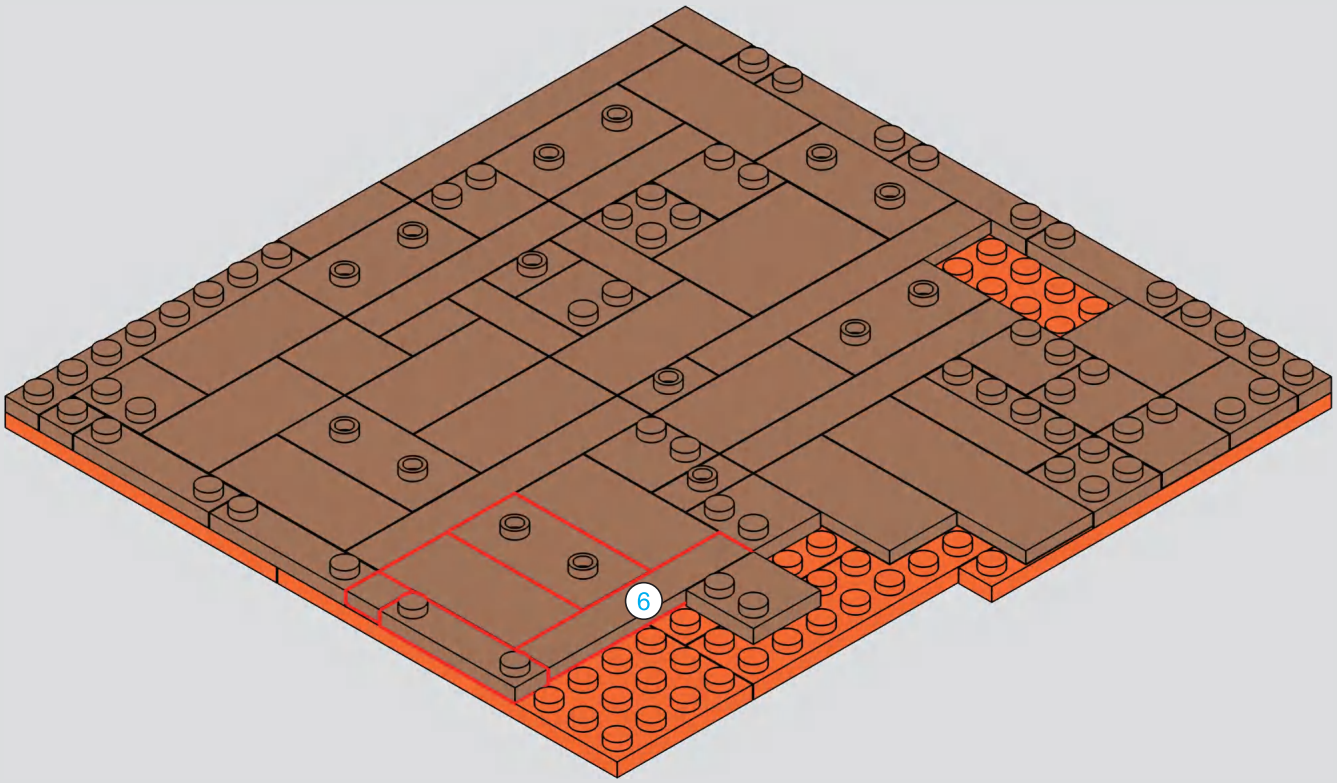

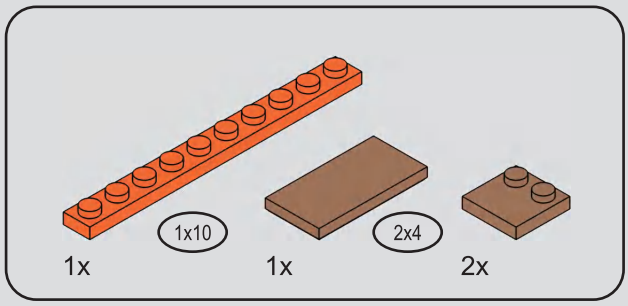


# 182

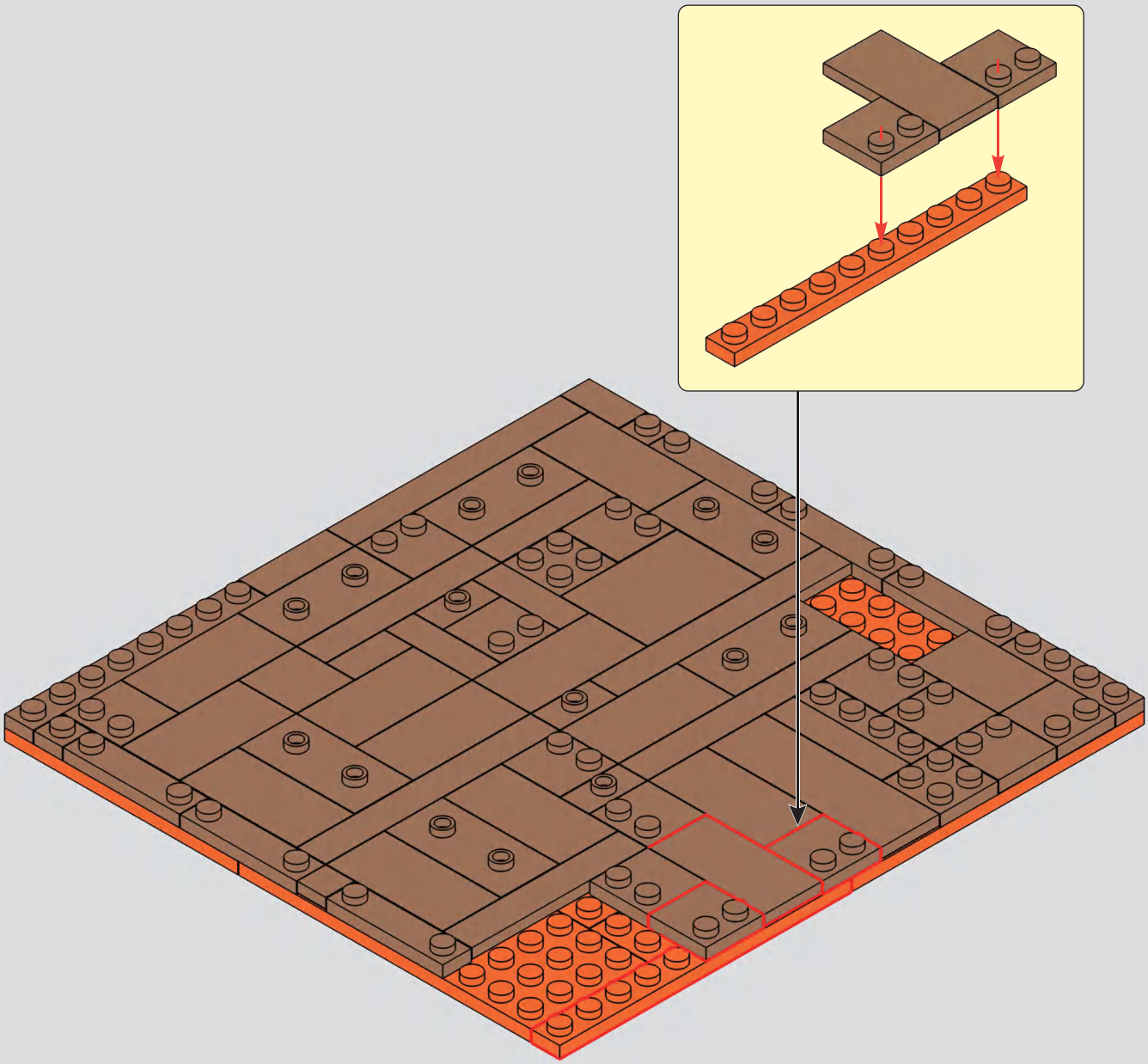

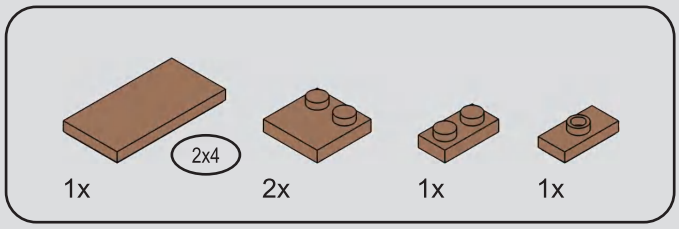


# 183

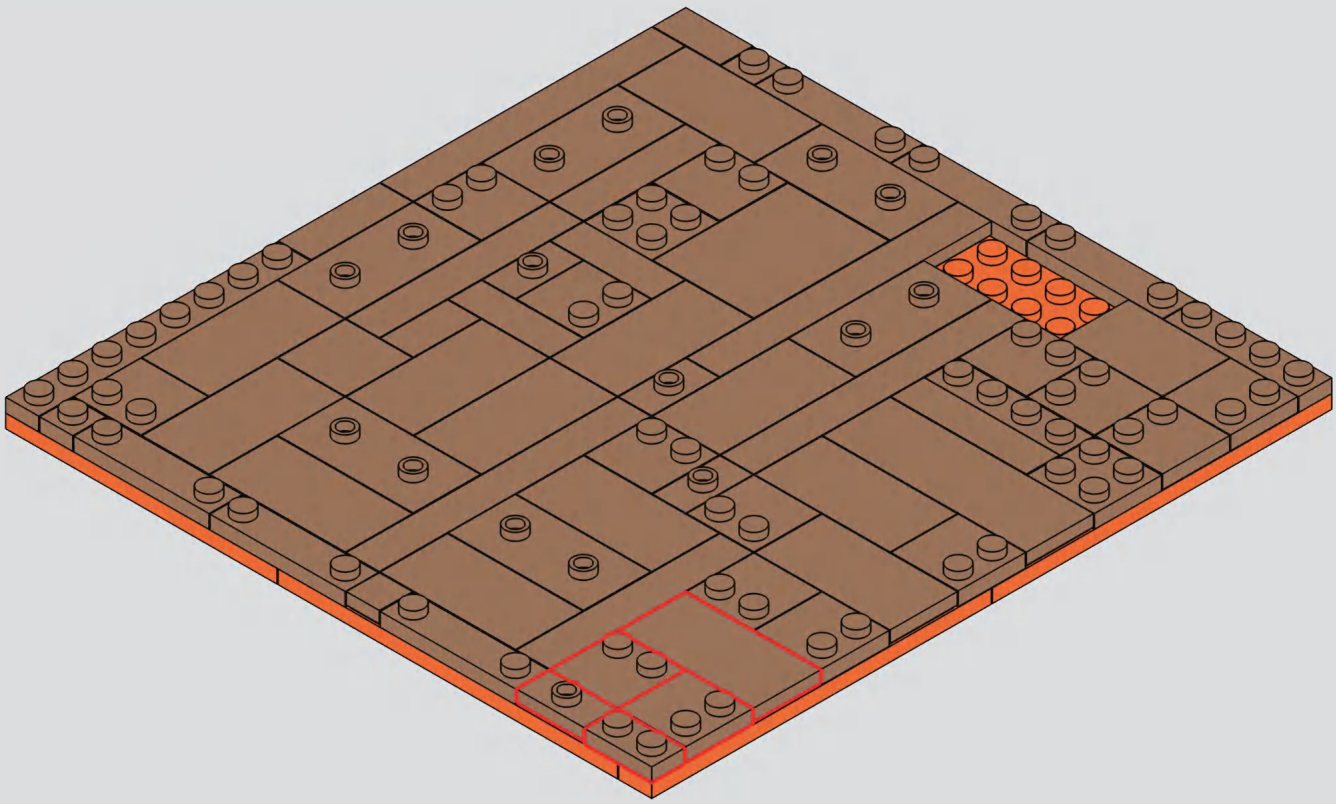

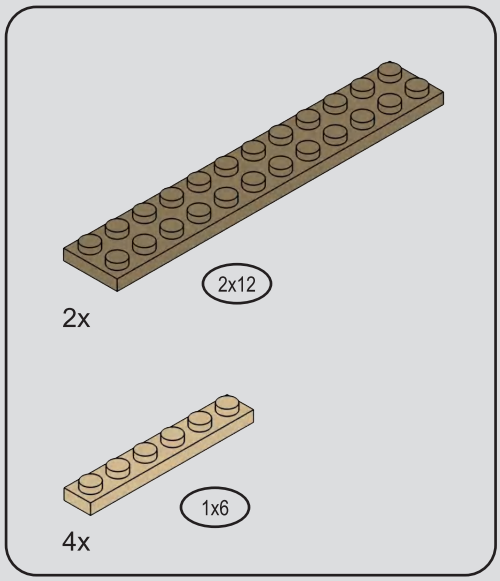


184

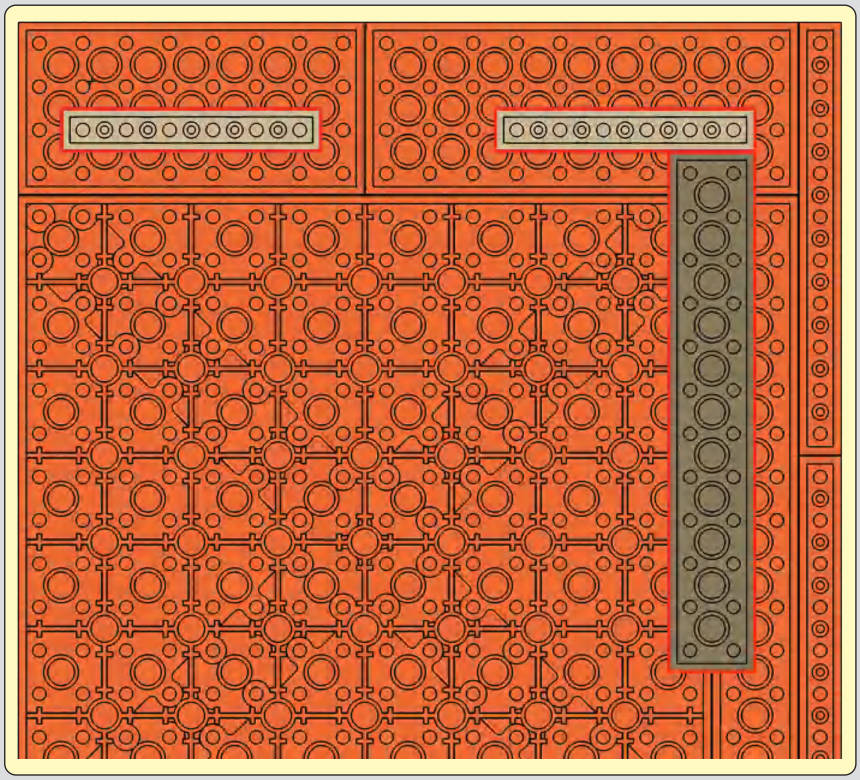

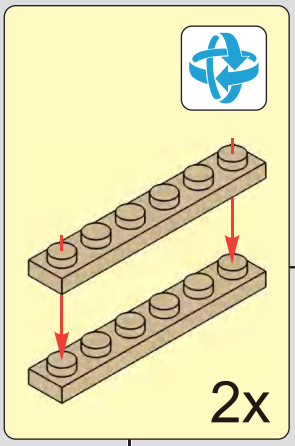


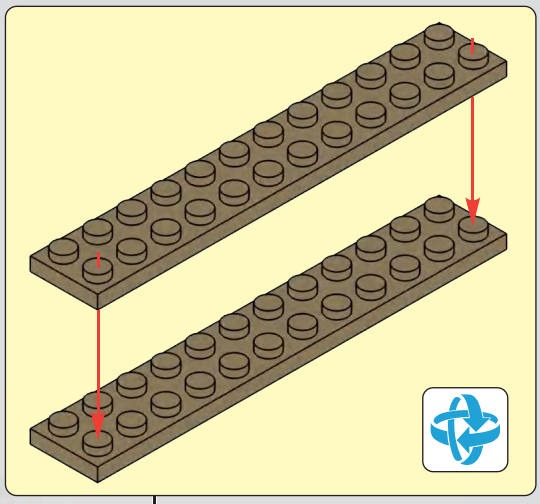

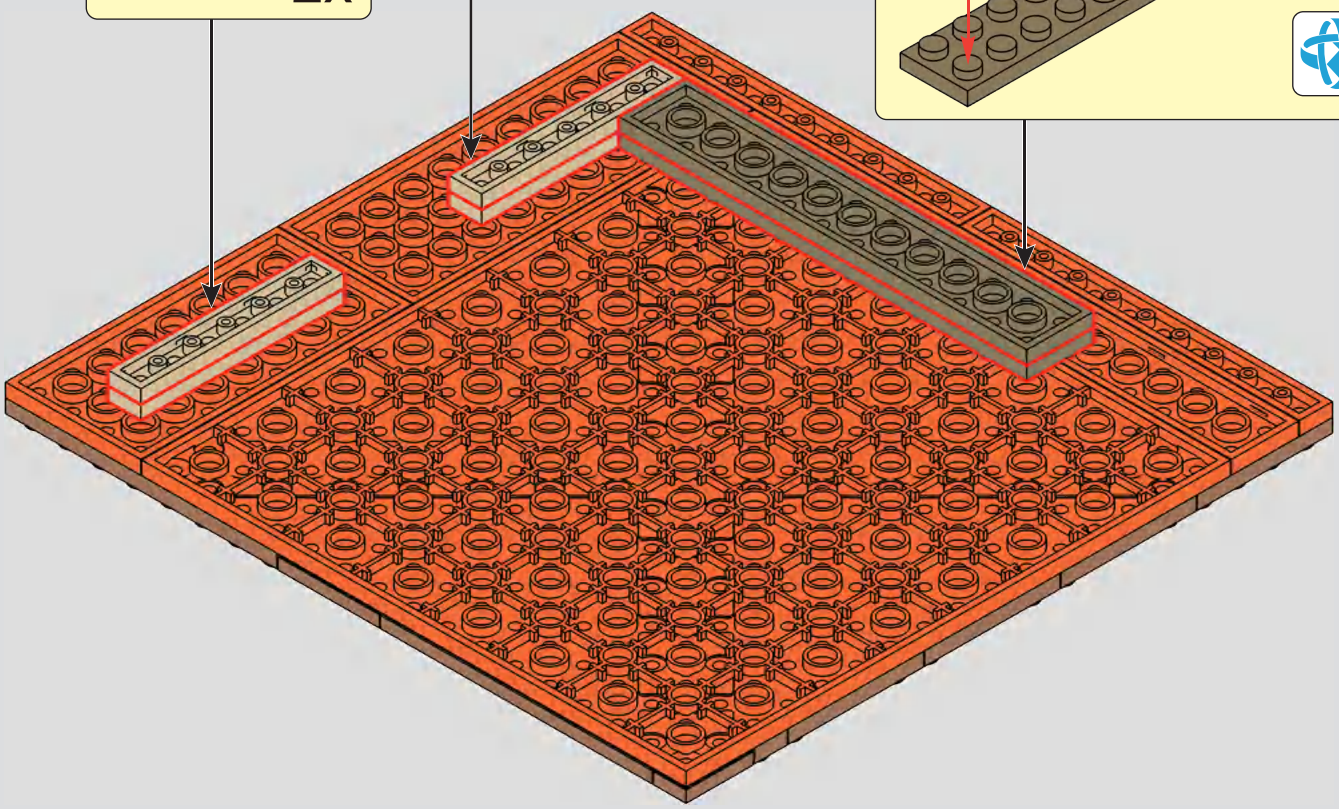

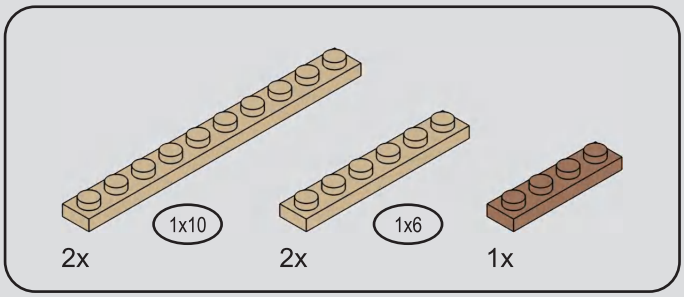


# 185

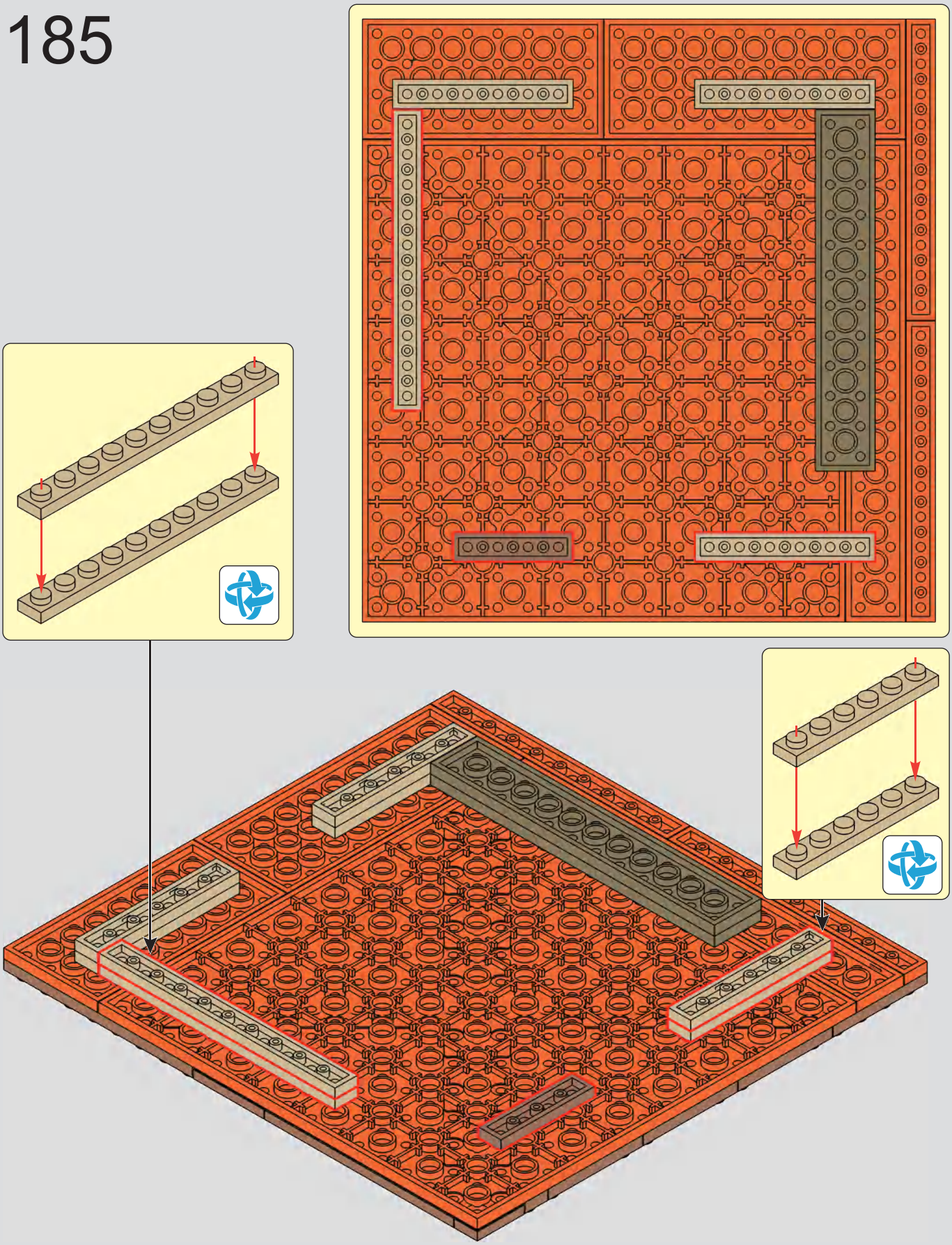

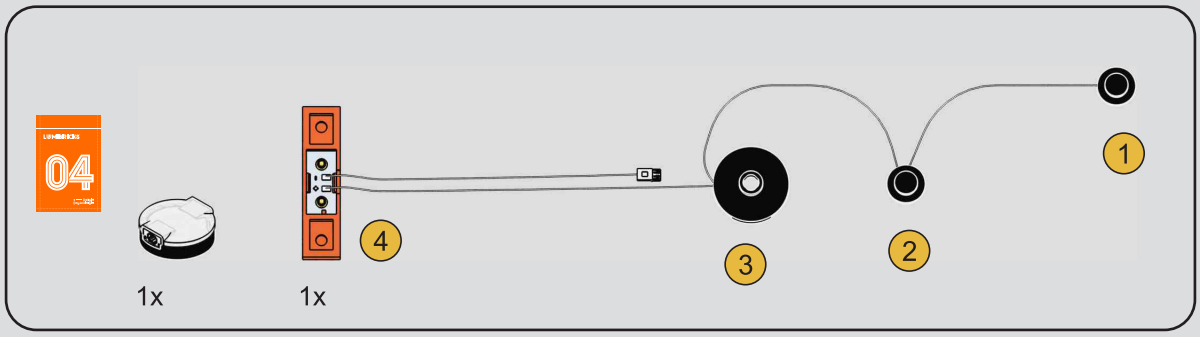


# 186

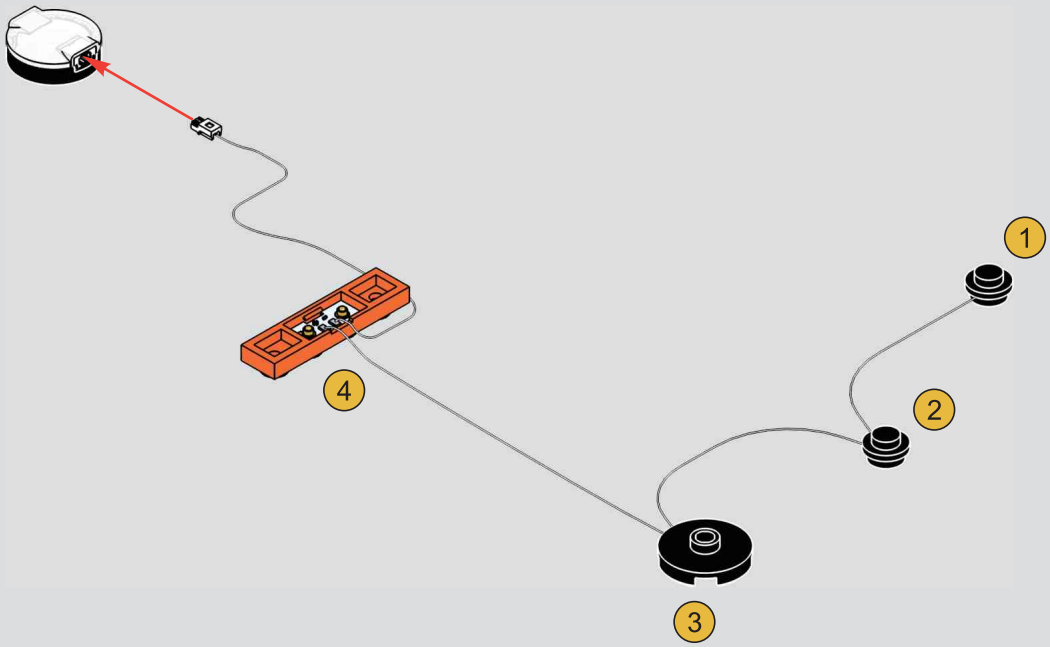


# 187

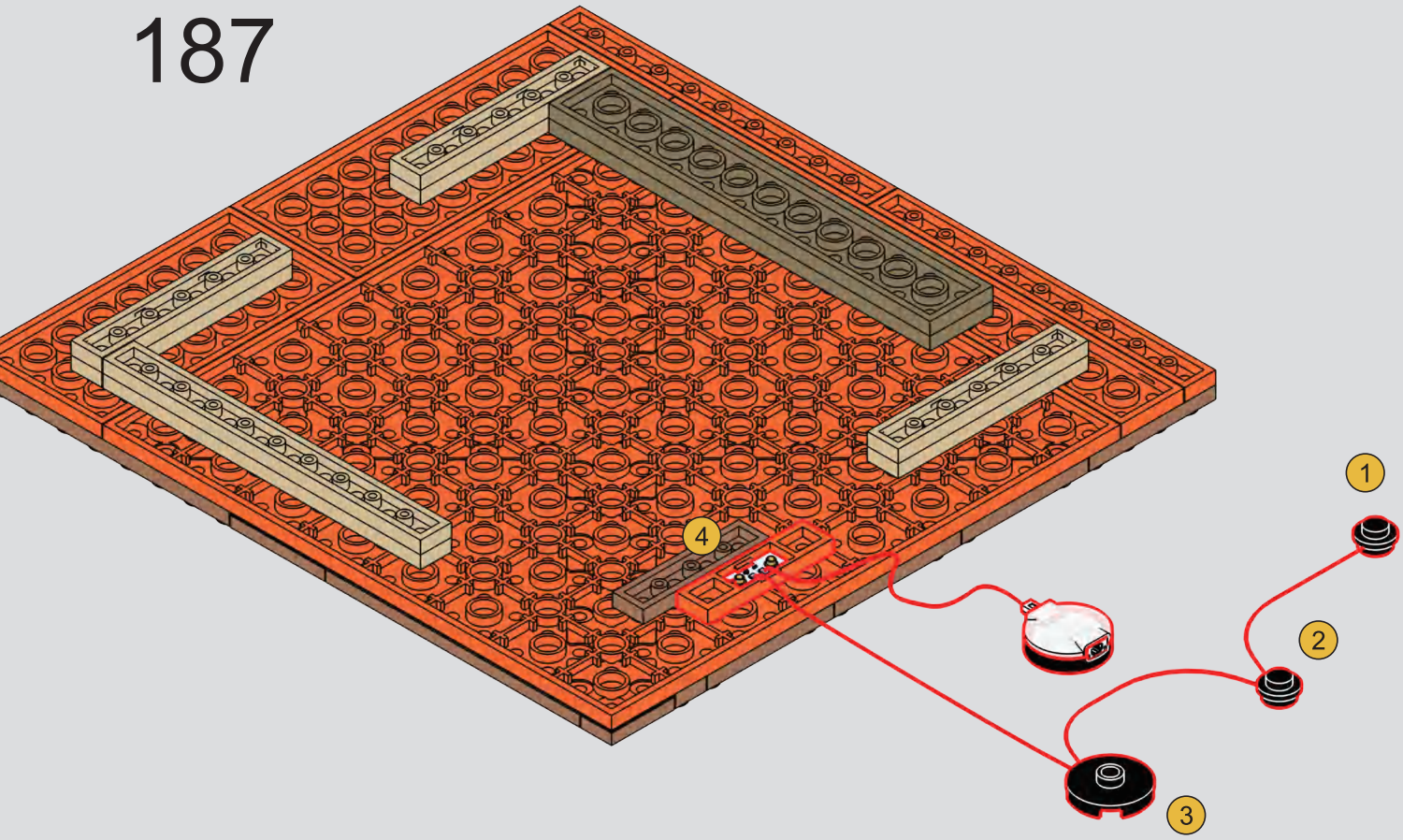

2x

# 188

**1**

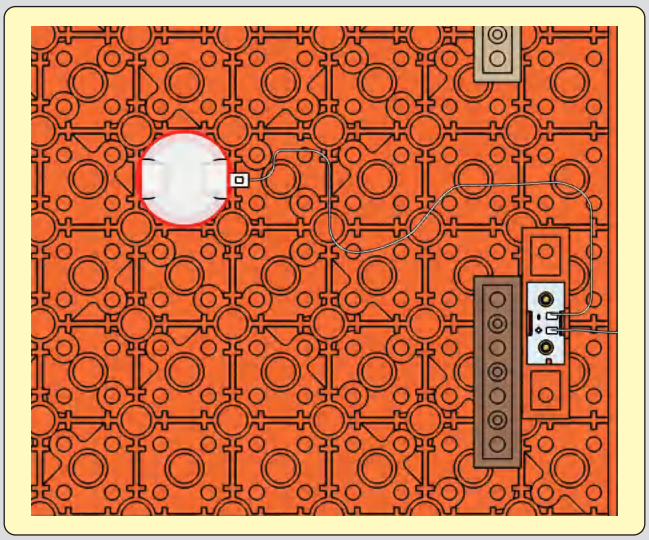

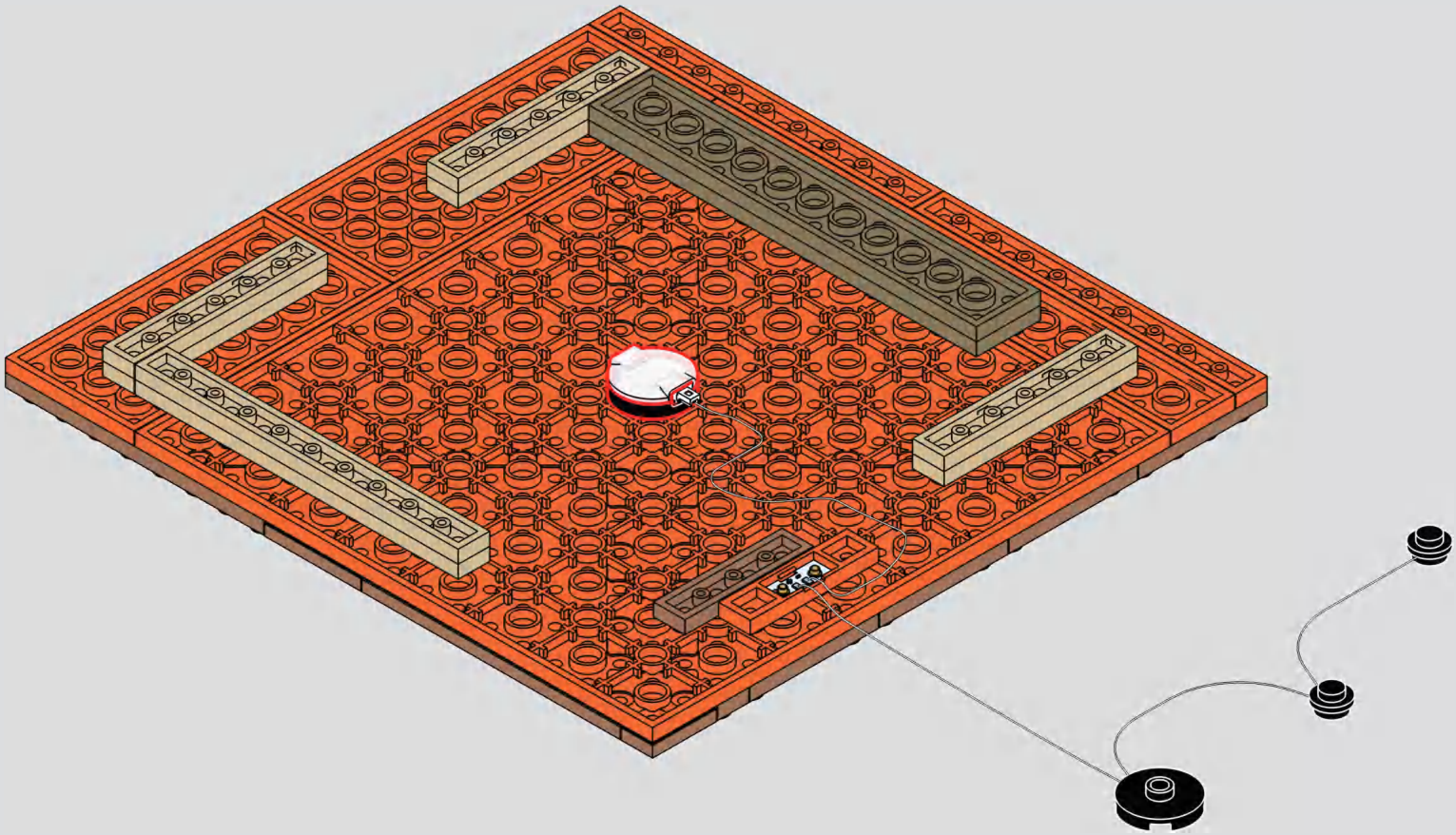

2

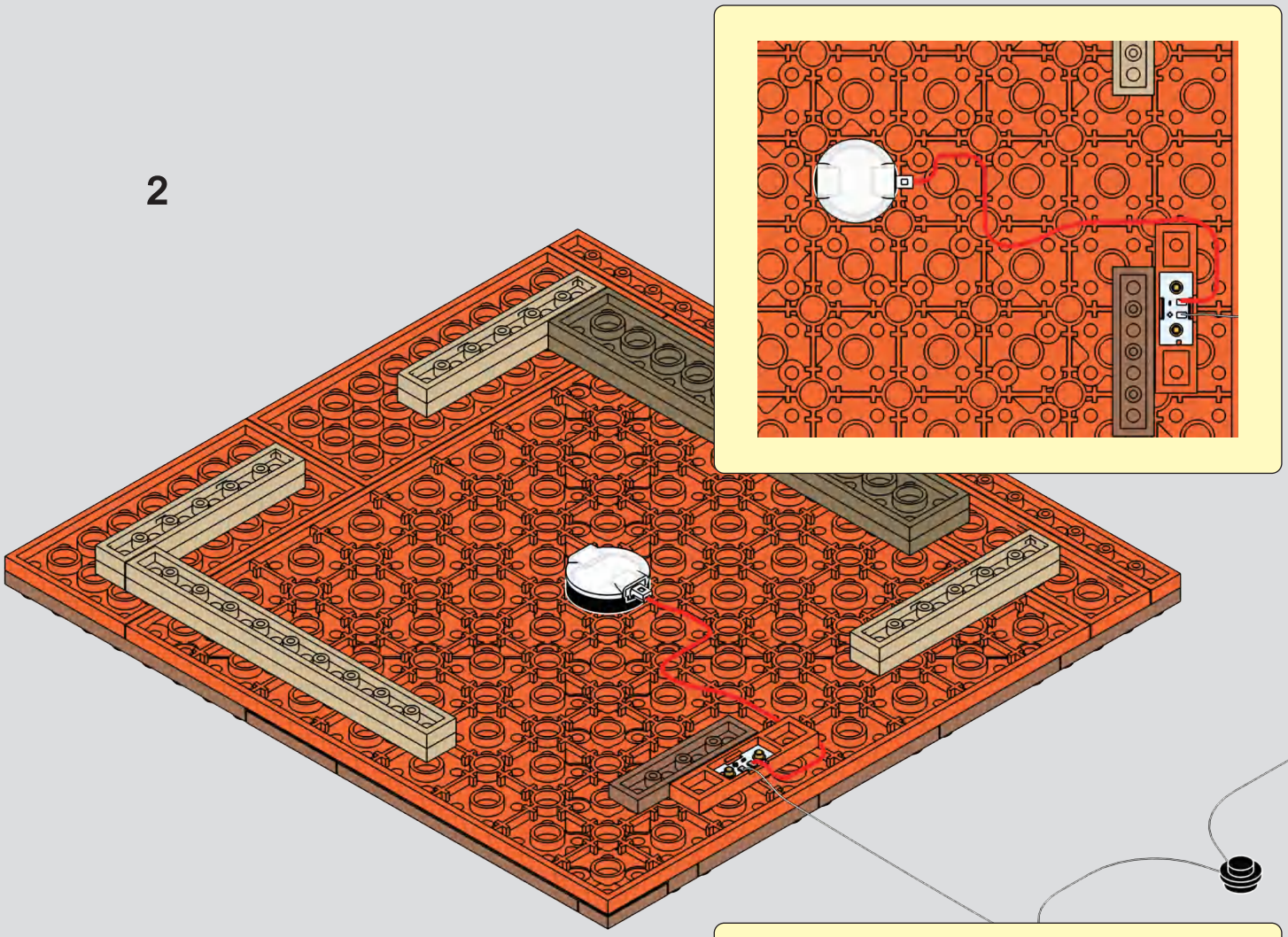

3

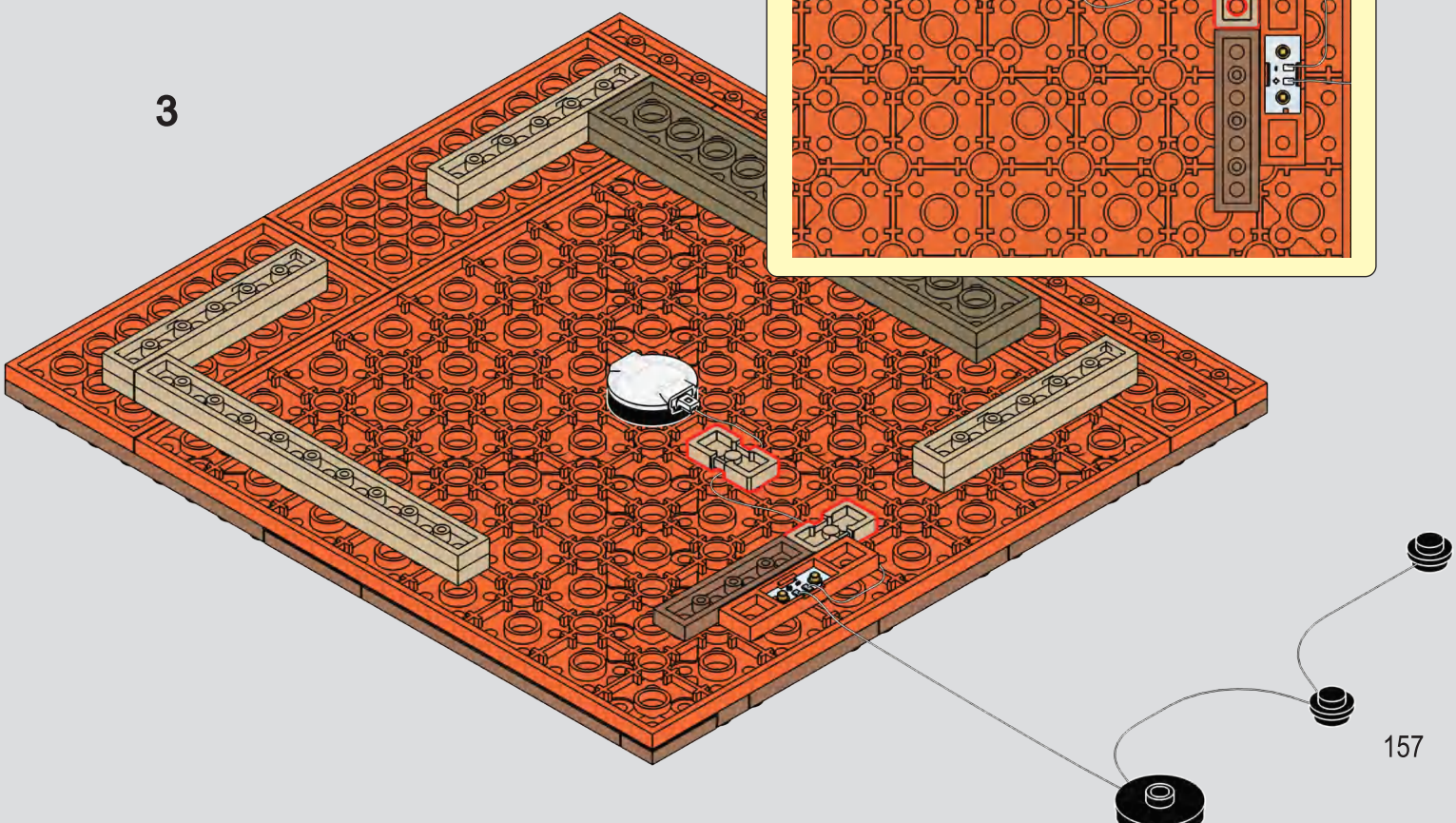

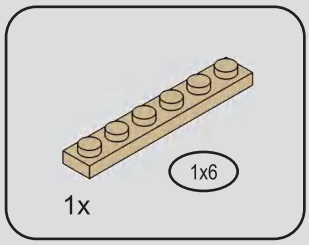


189

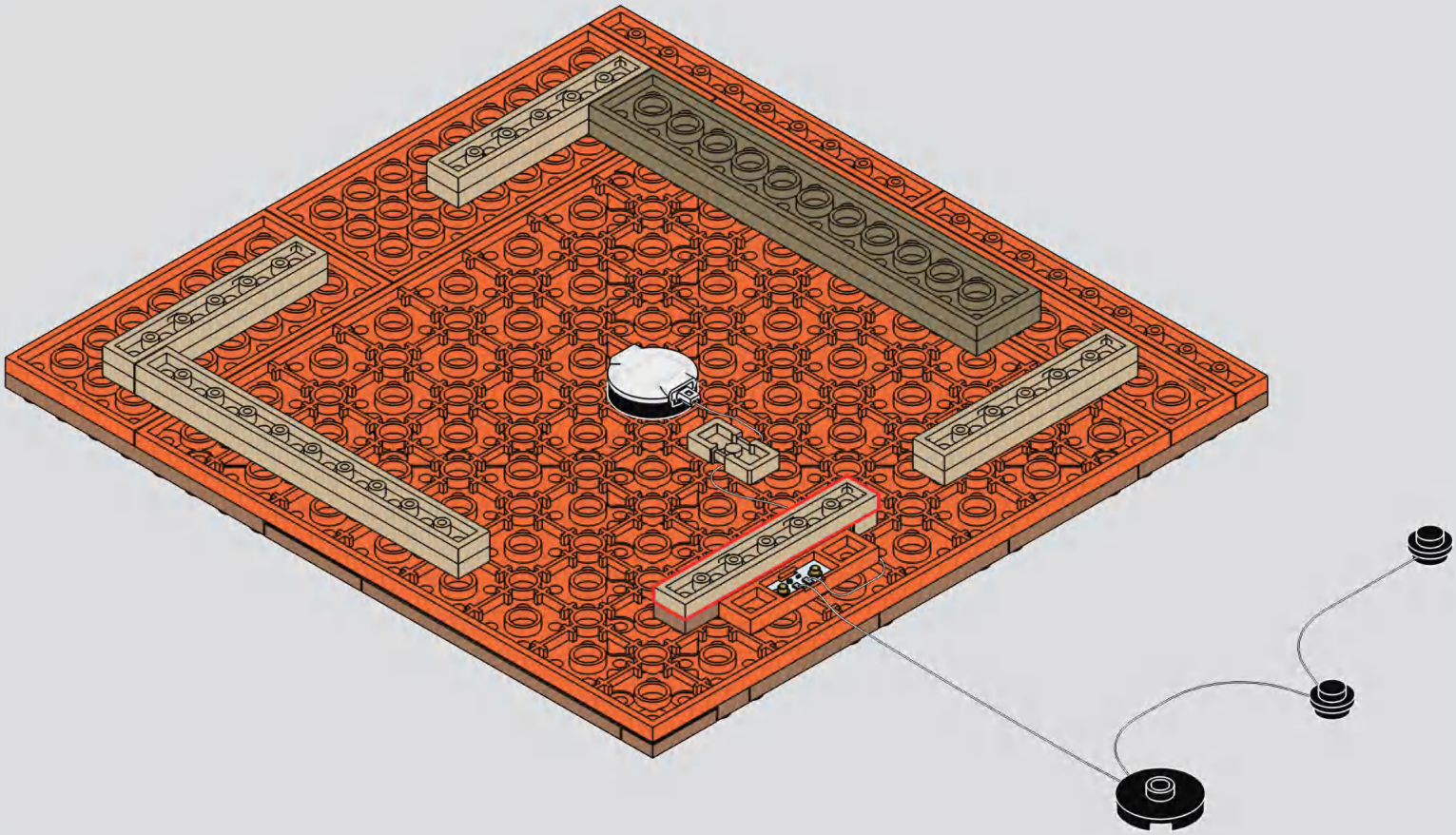

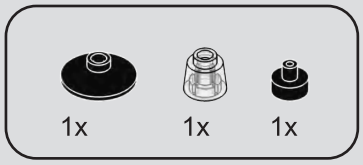


# 190

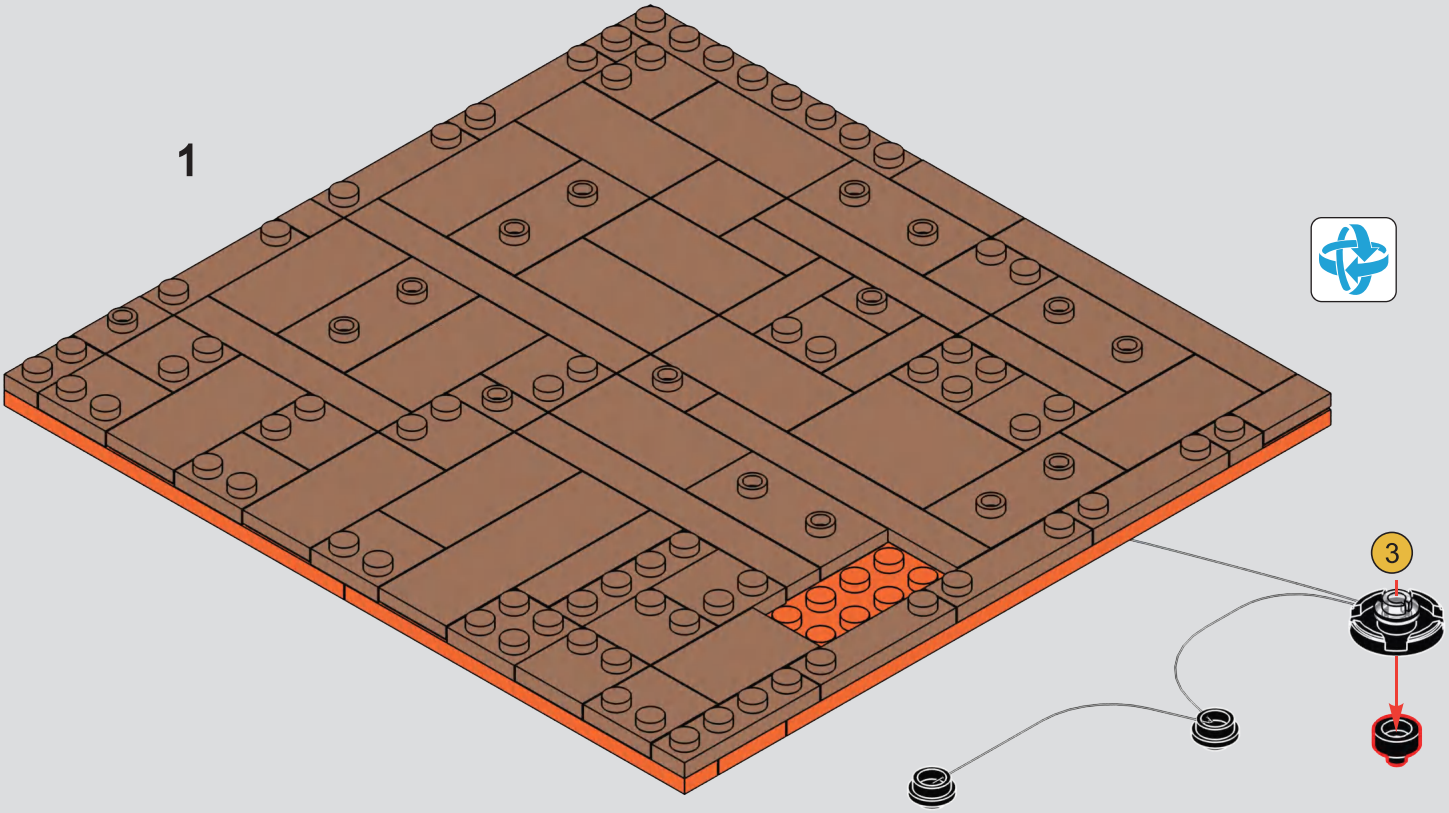


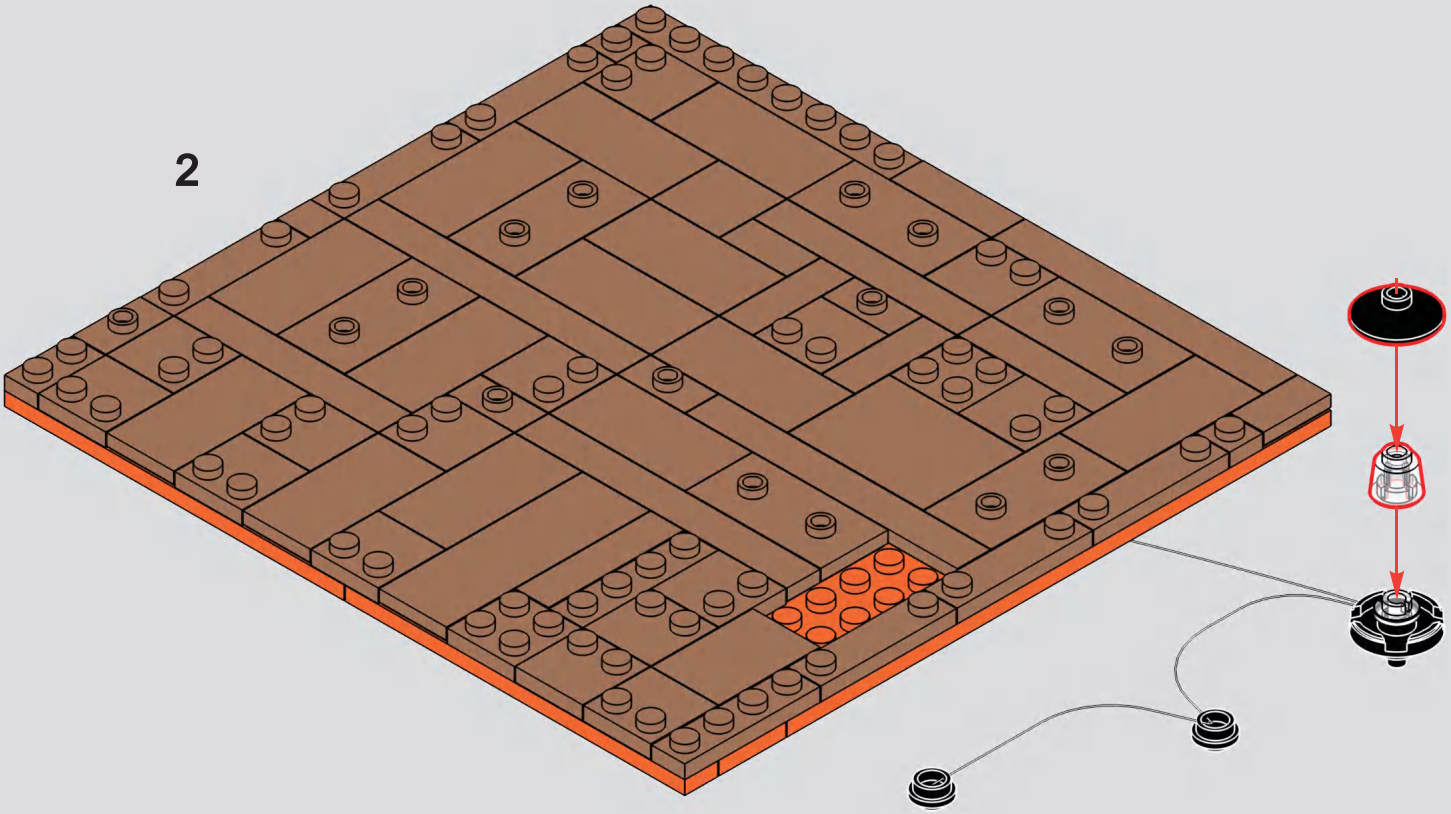

191

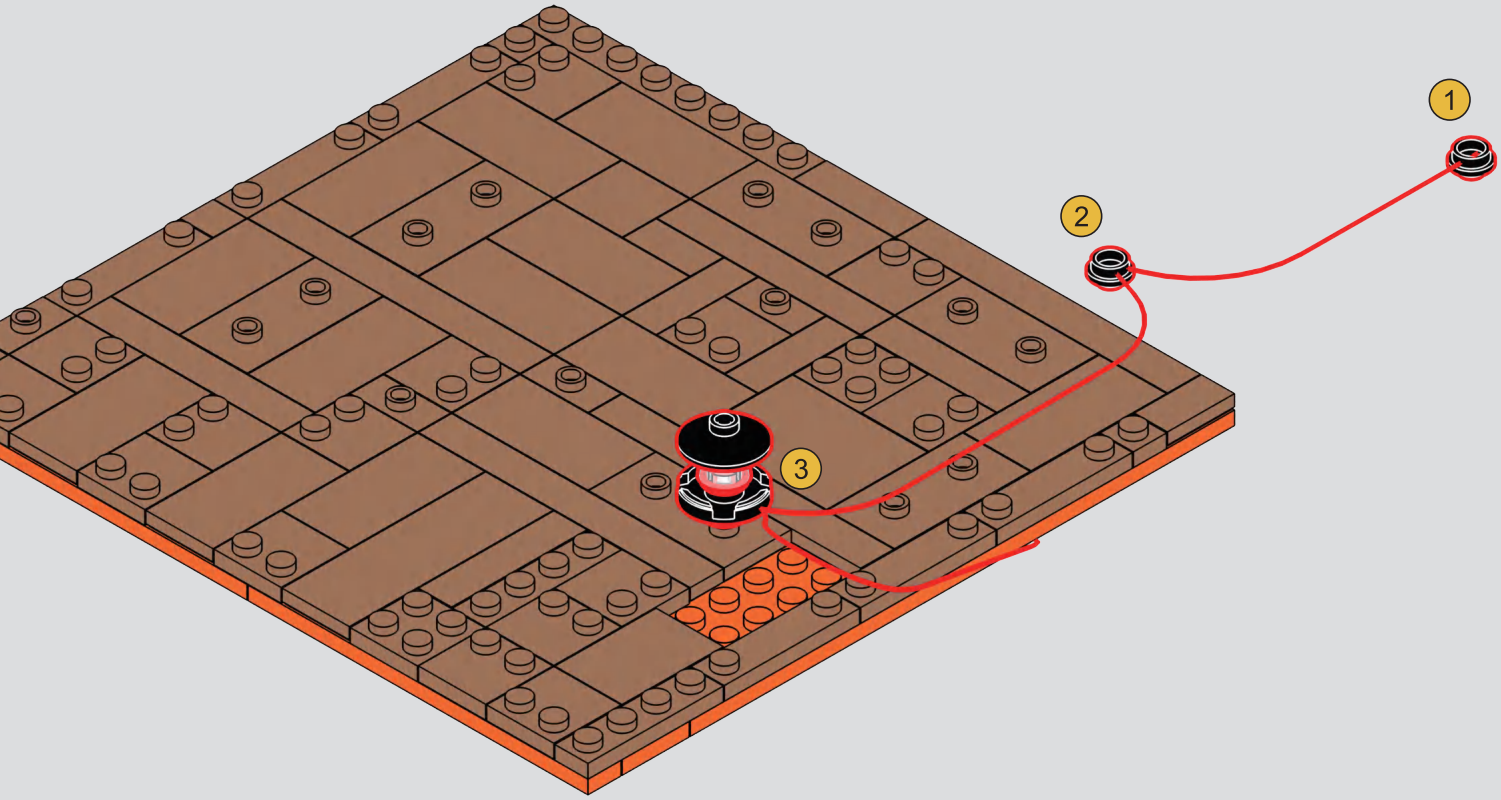

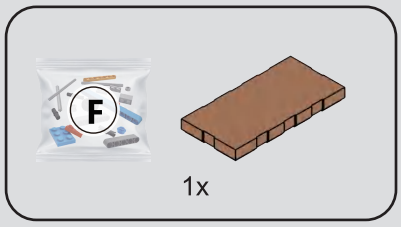


192

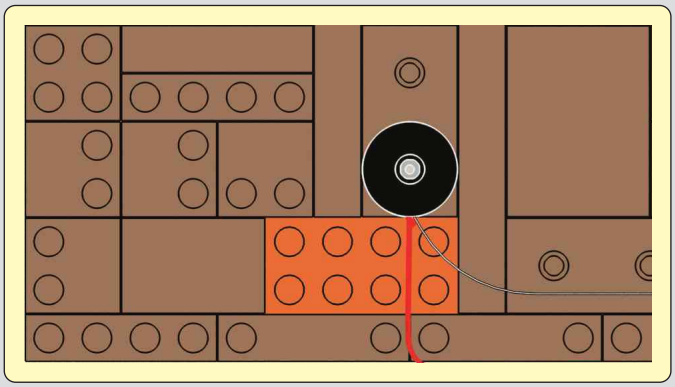

1

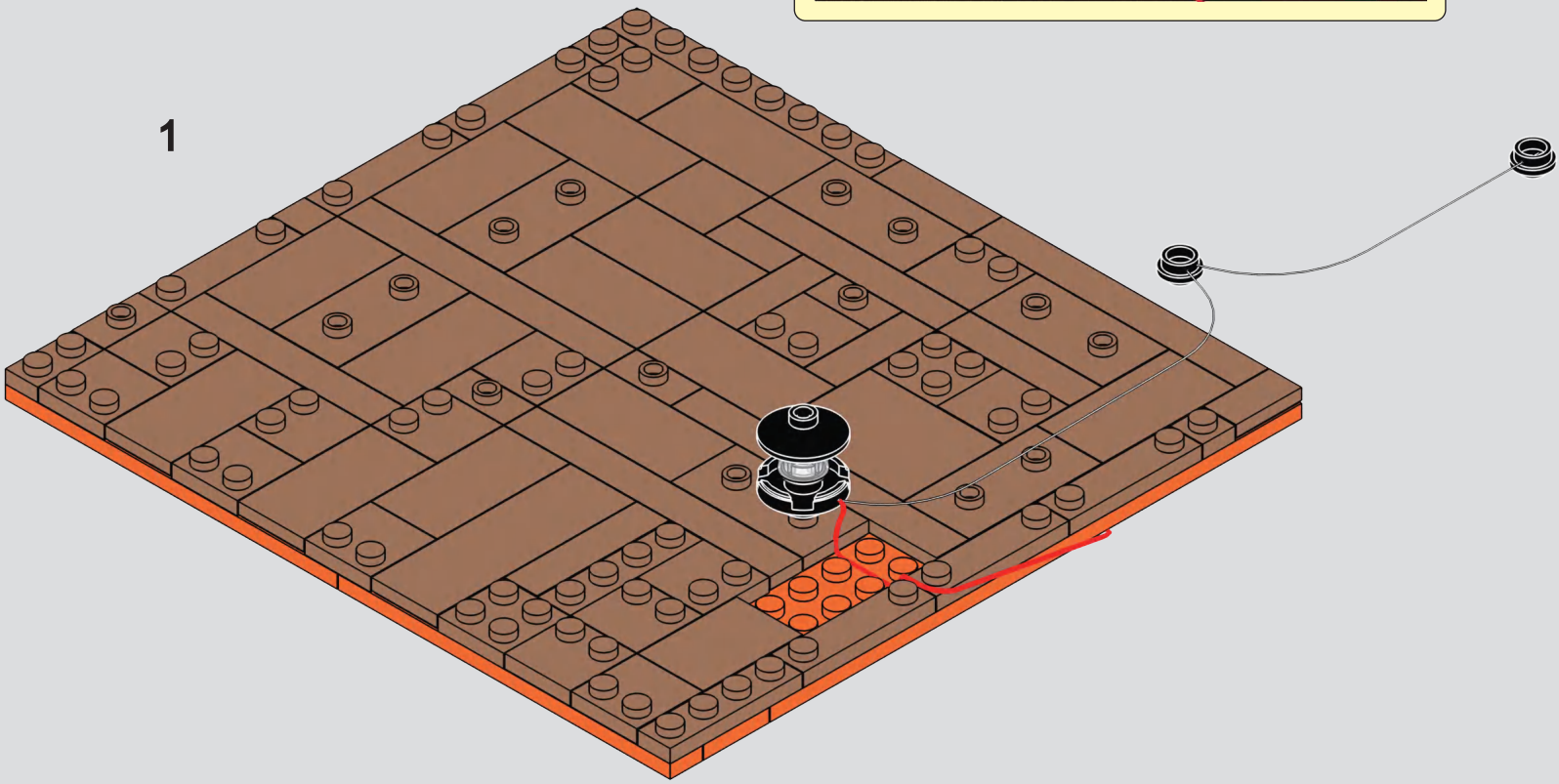

2

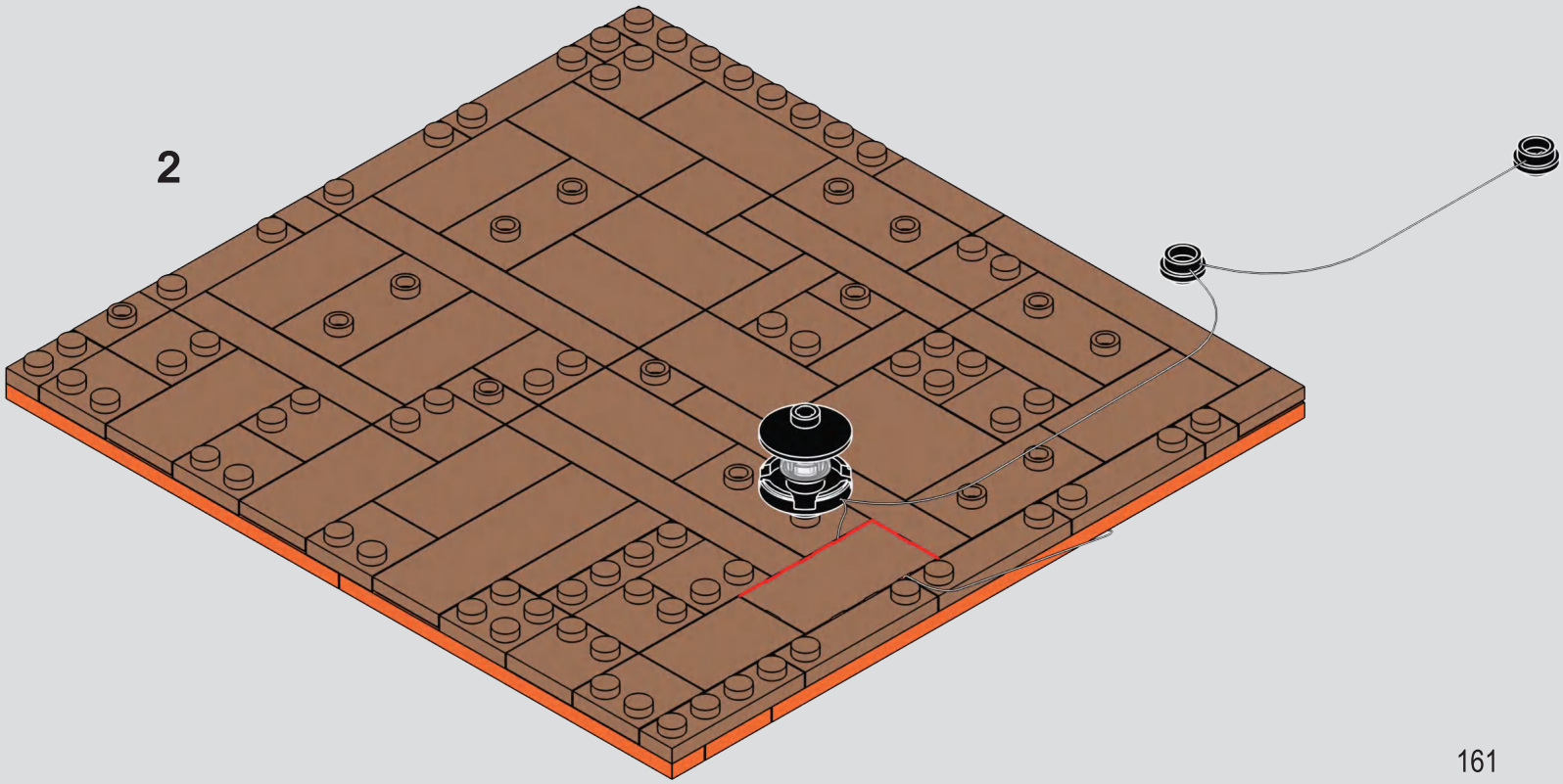

# 193

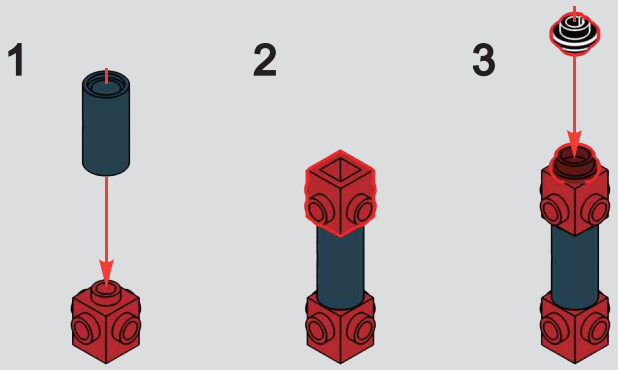


---

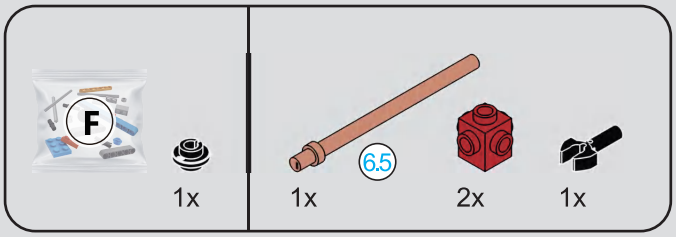


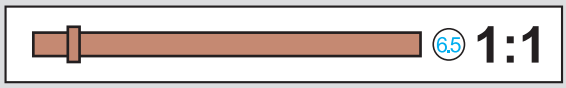


# 194

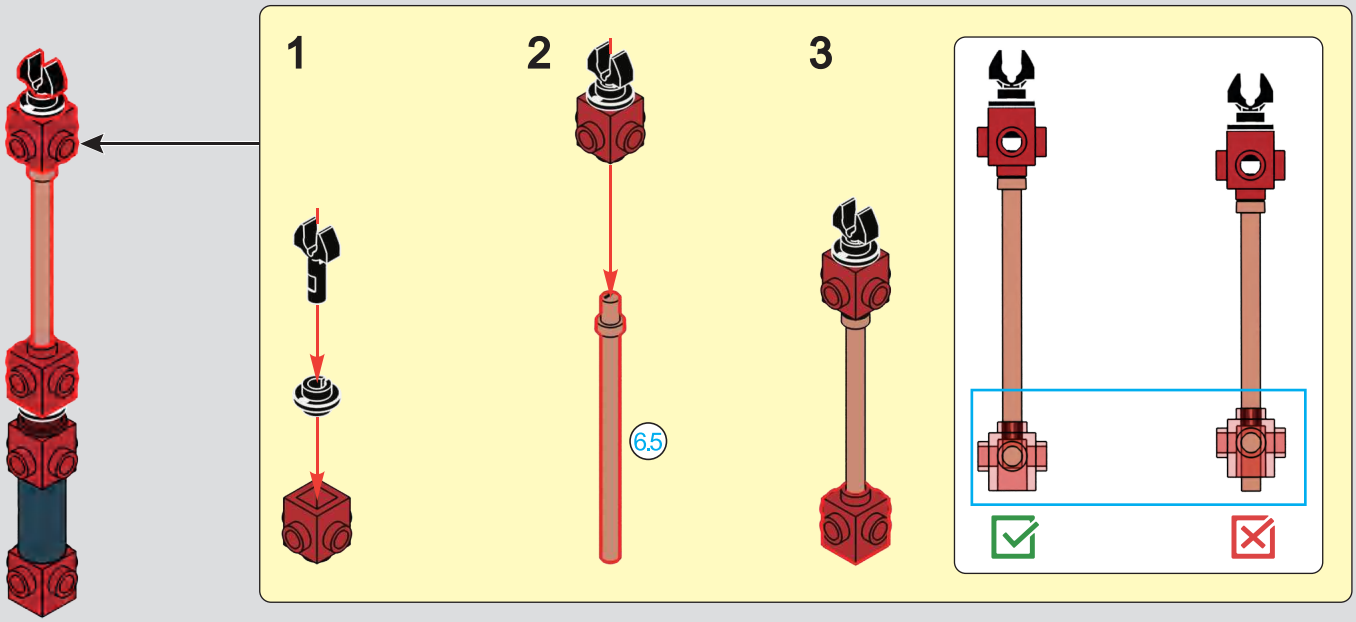

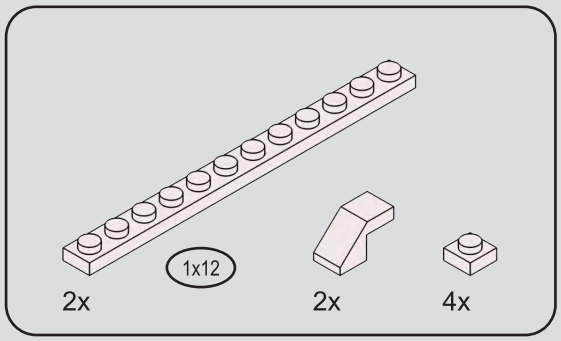


# 195

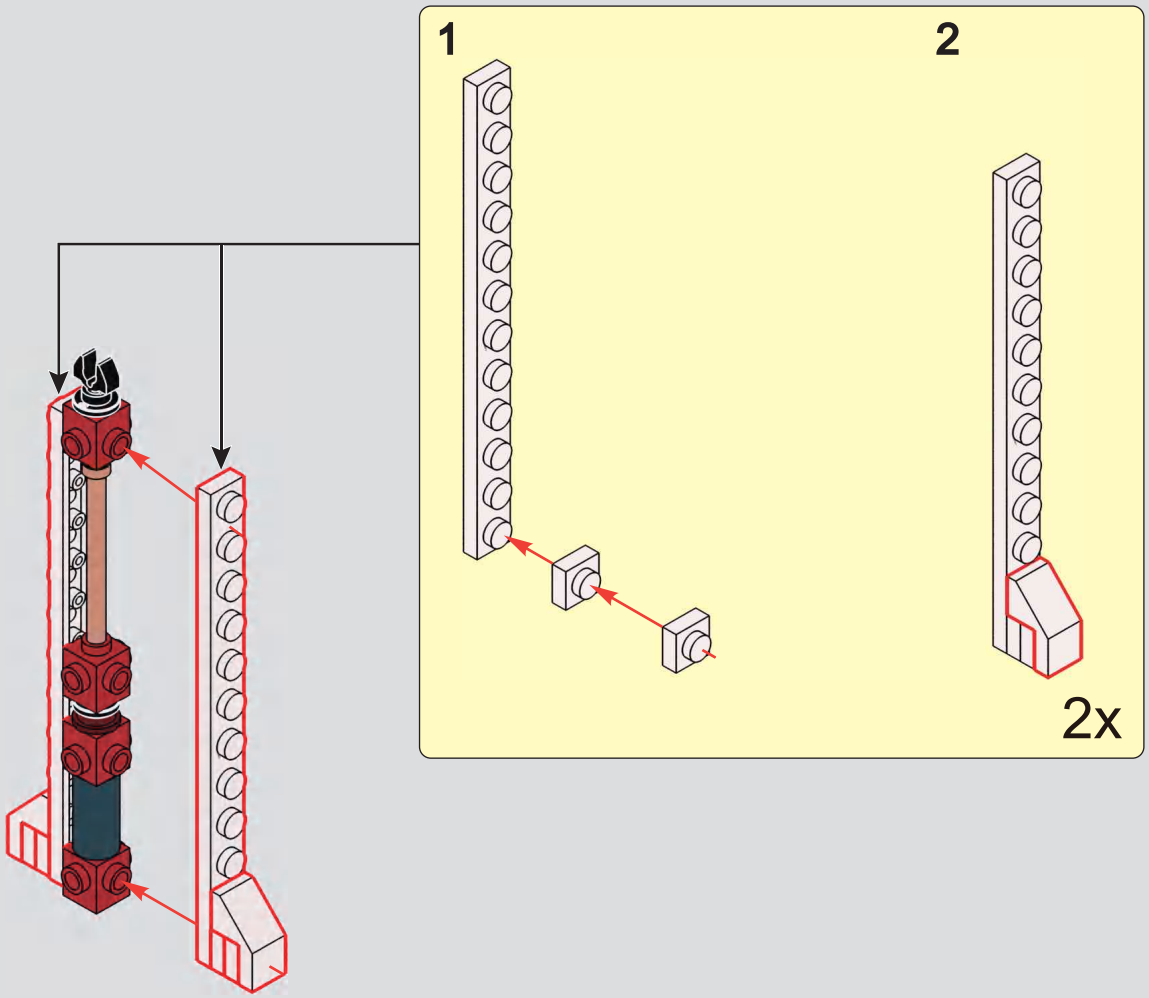

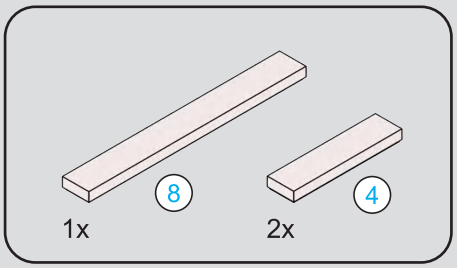


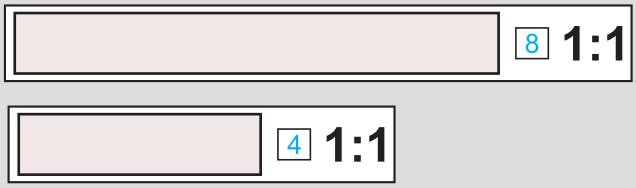


# 196

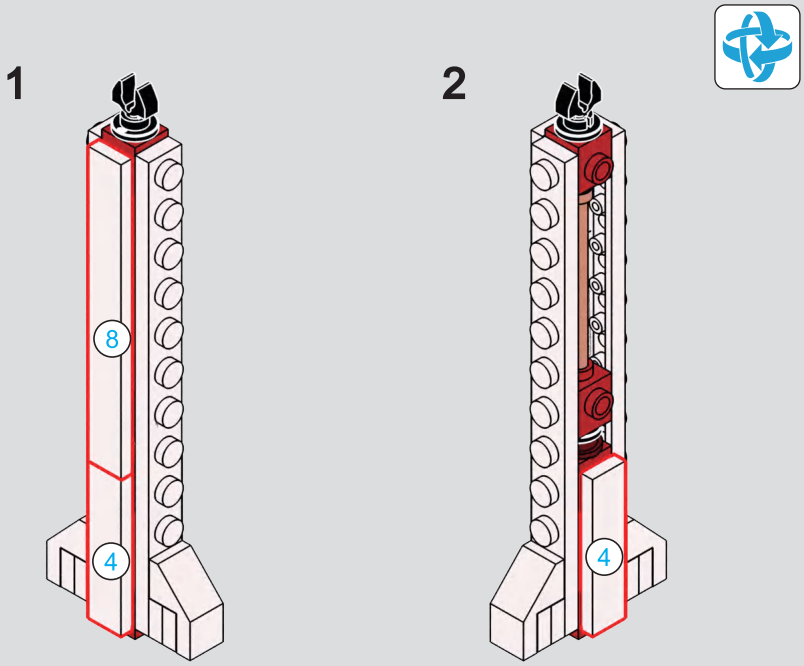


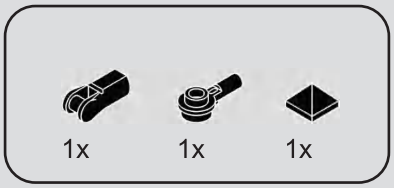


# 197

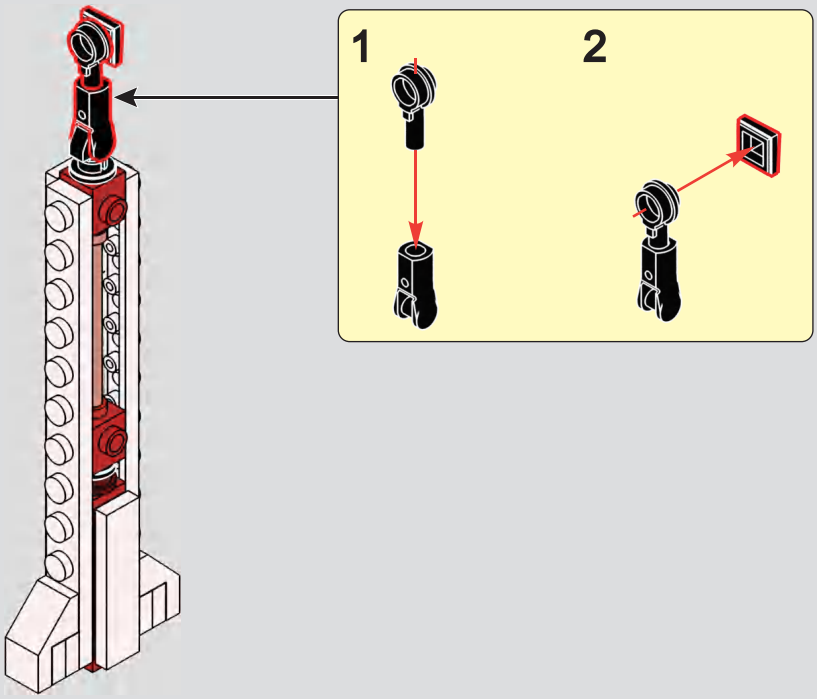

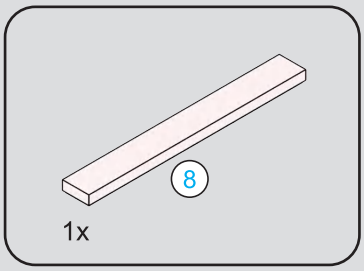


8 1:1

198

1

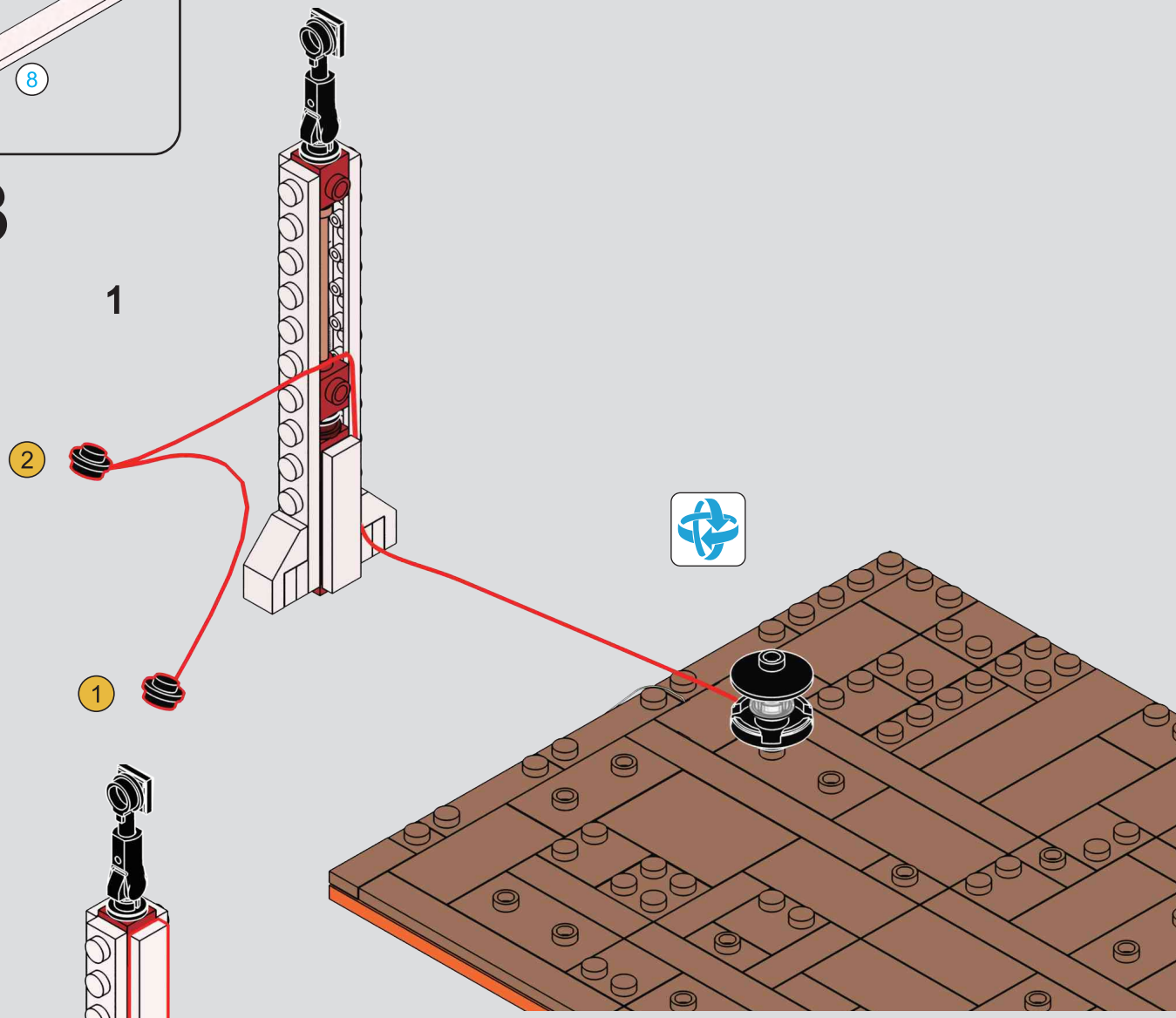


2

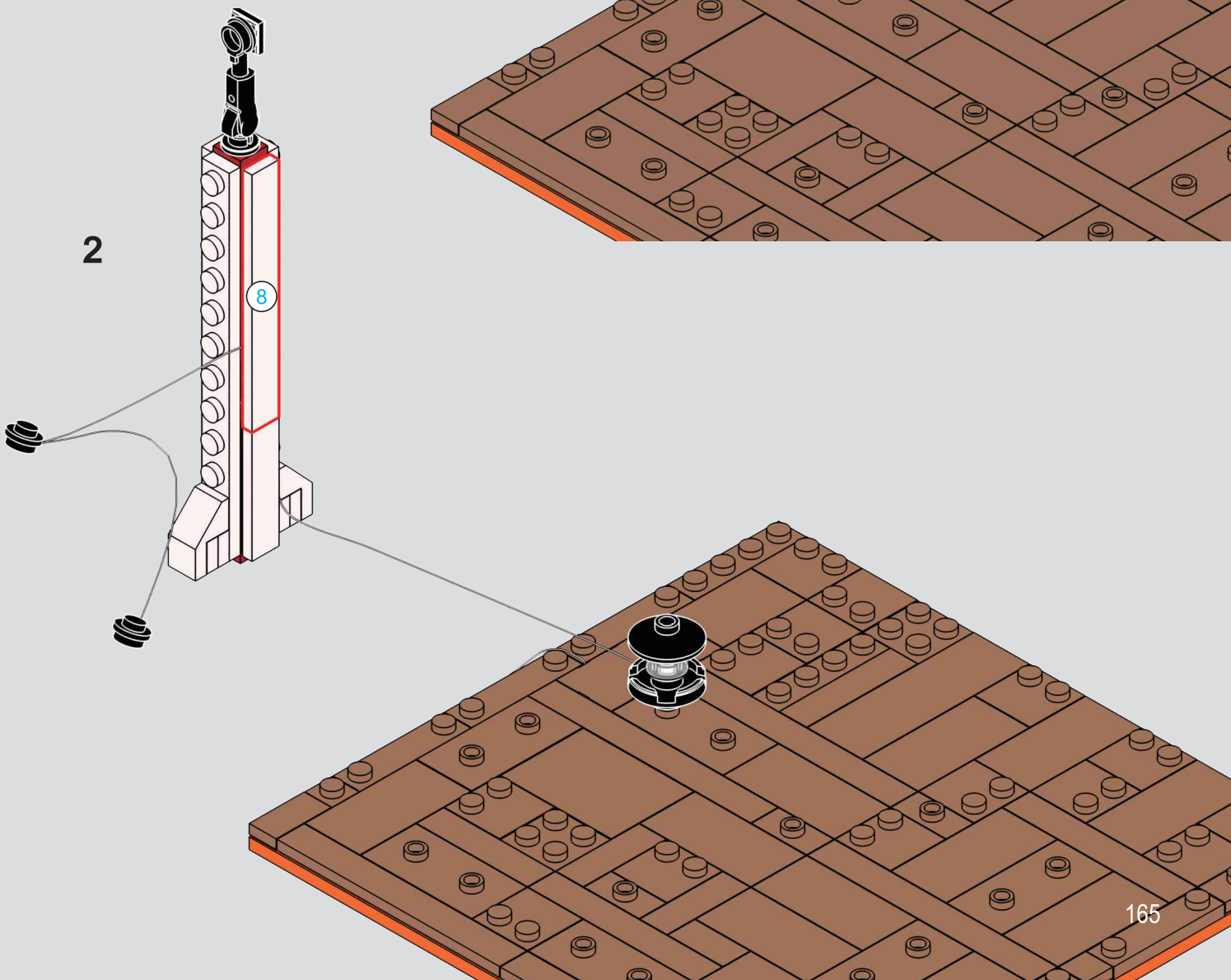

# 199

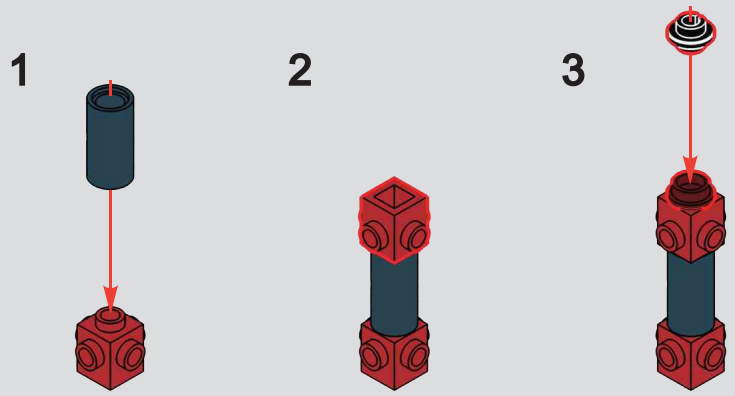


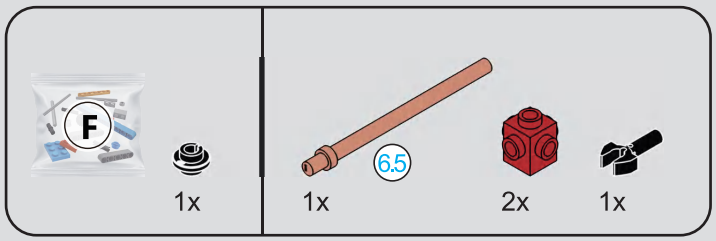


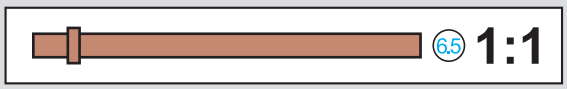


# 200

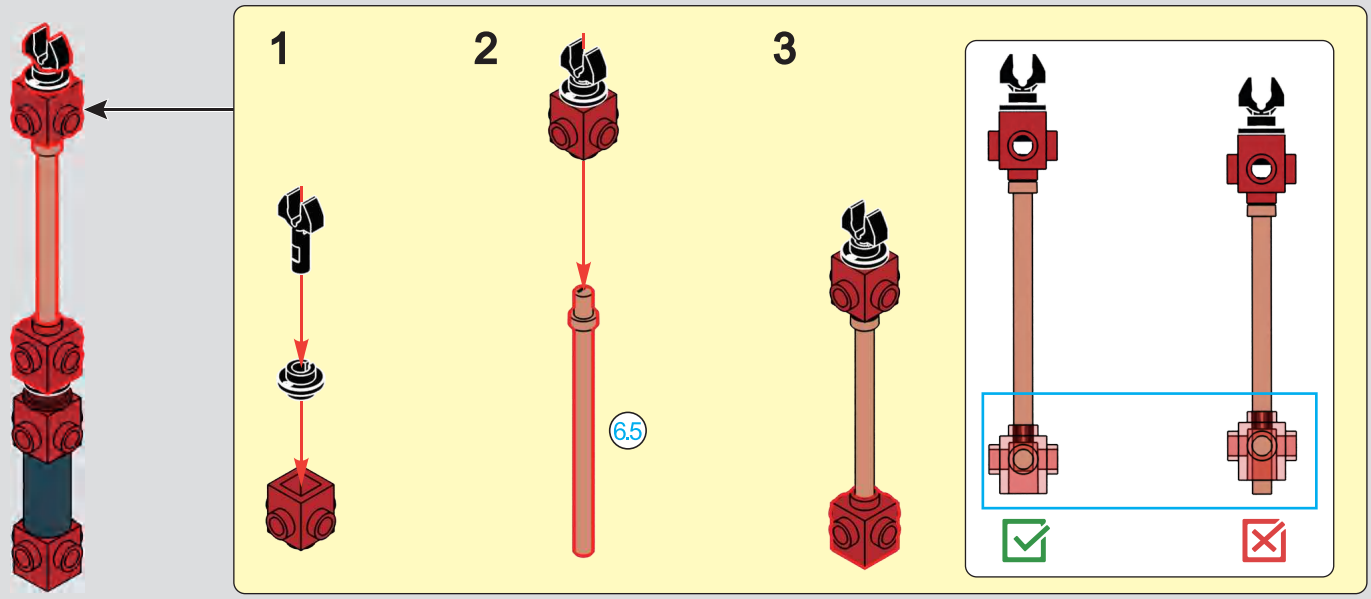

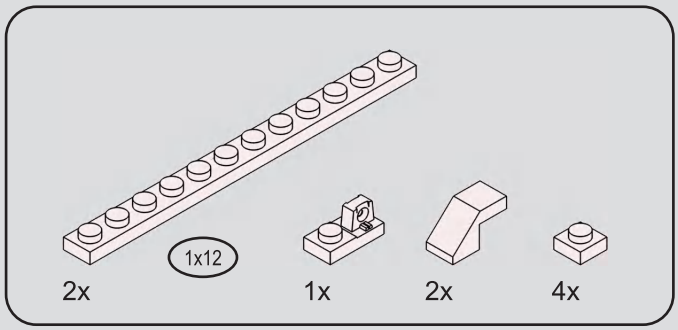


# 201

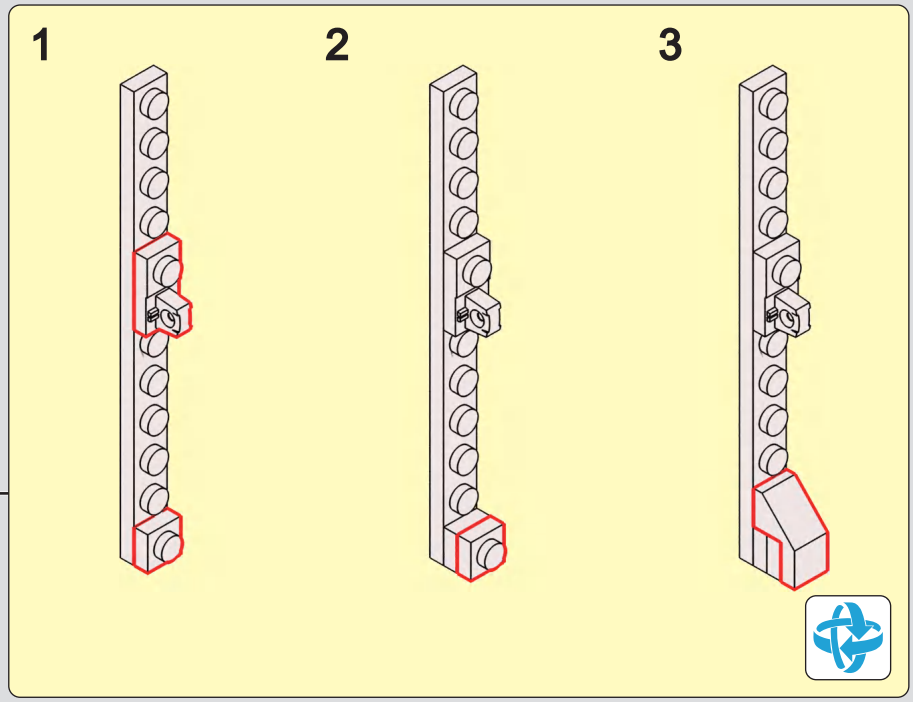


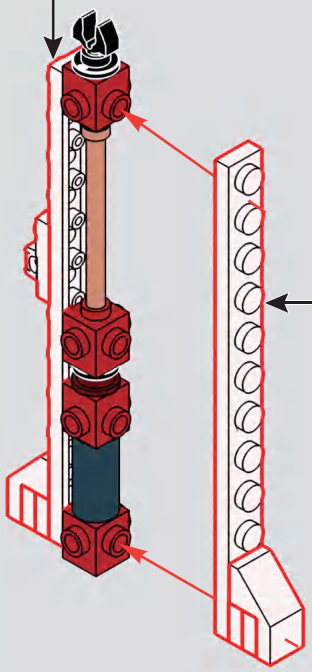

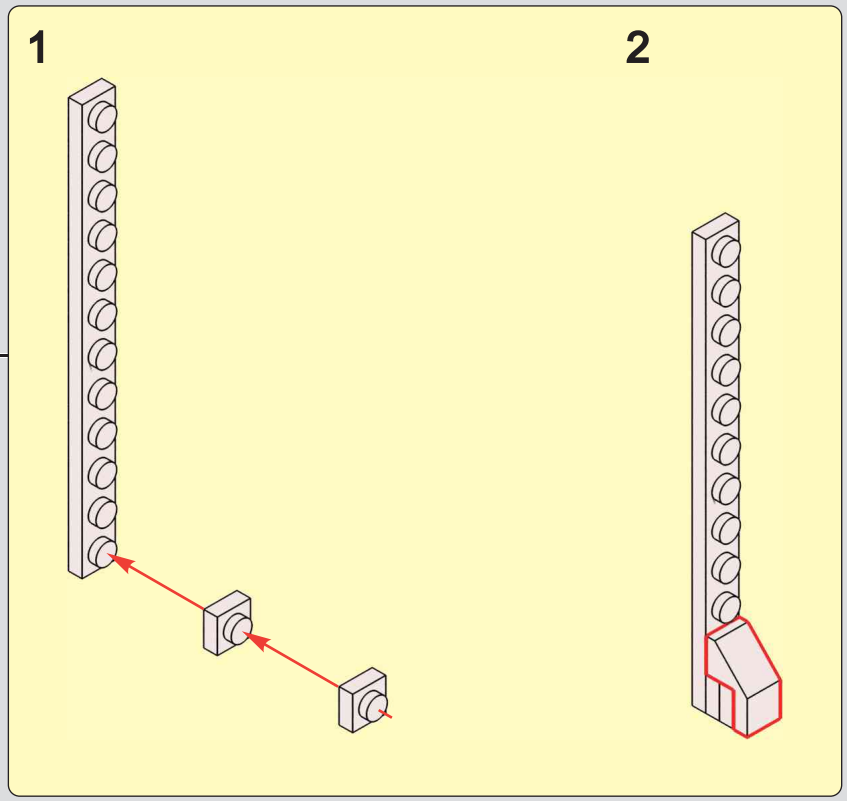

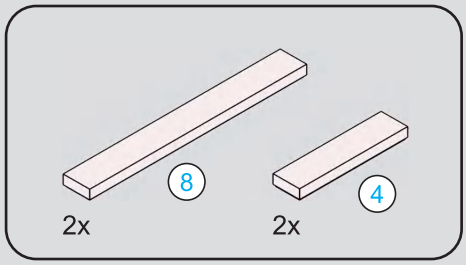

# 202

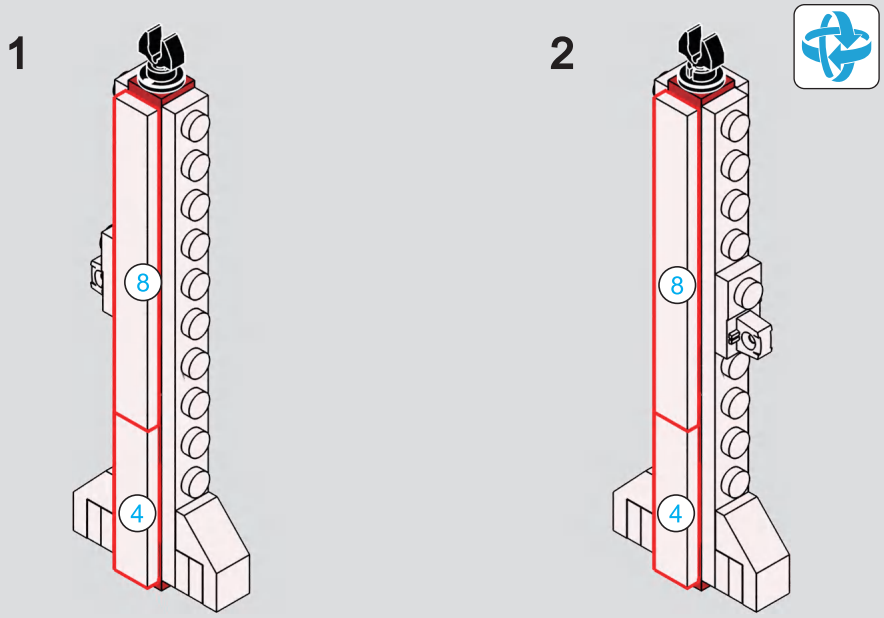


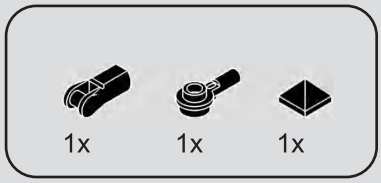


# 203

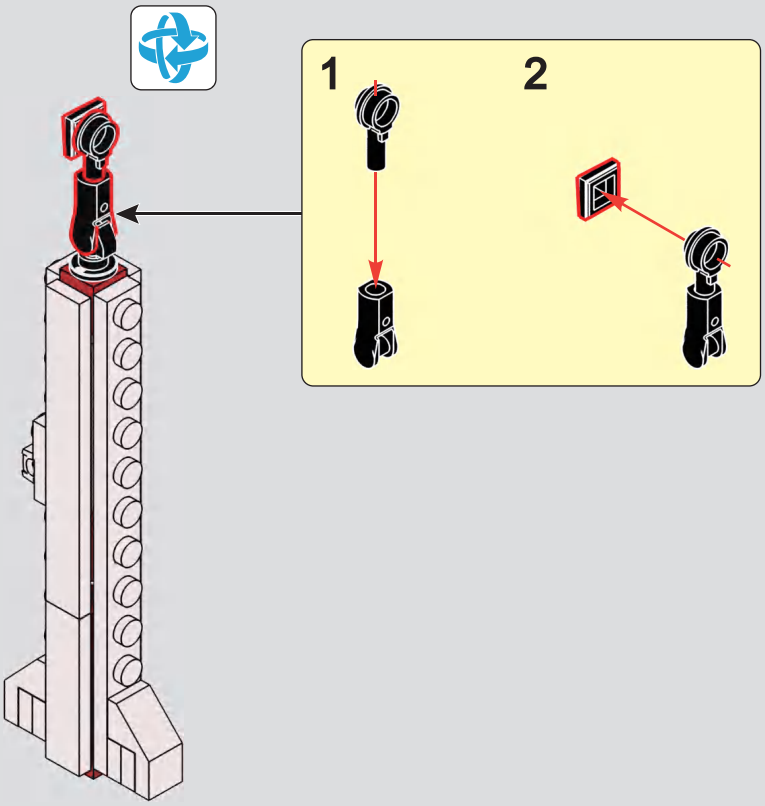

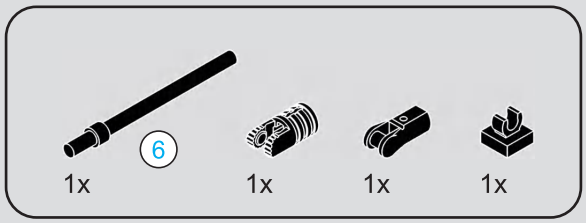

# 204

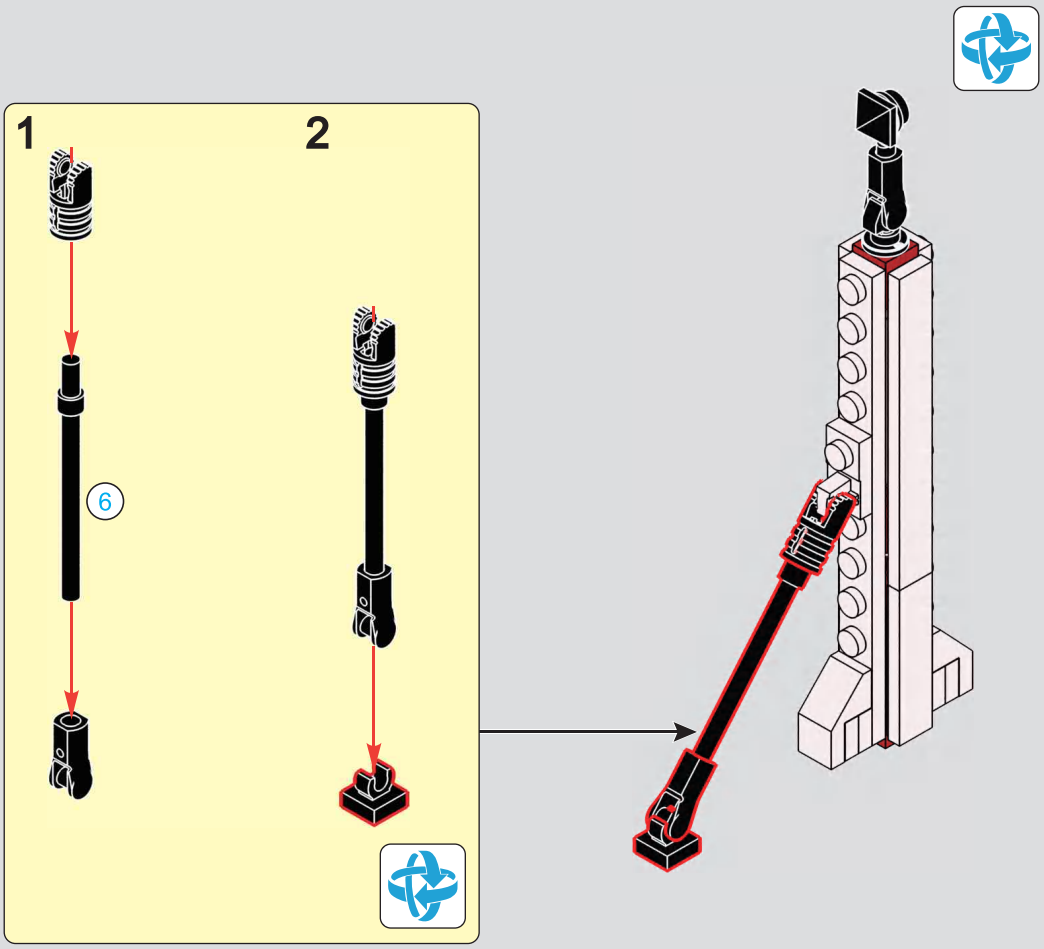

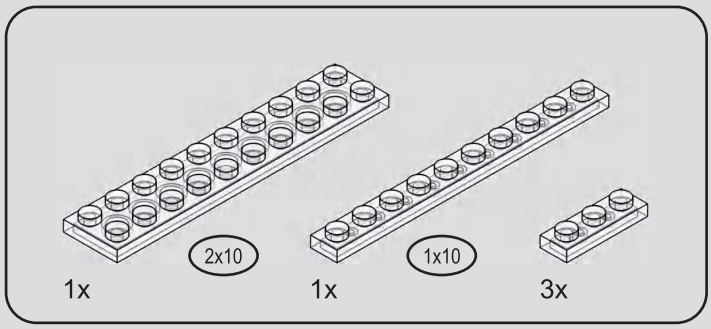


# 205

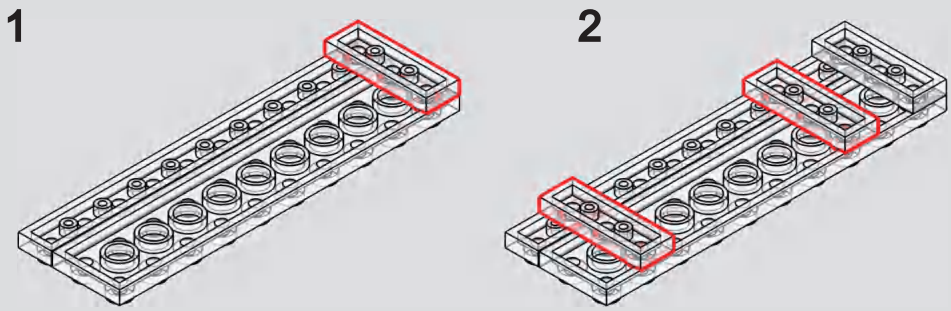


---

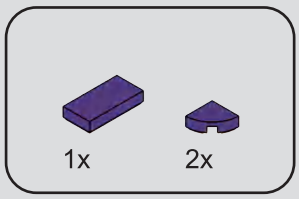


# 206

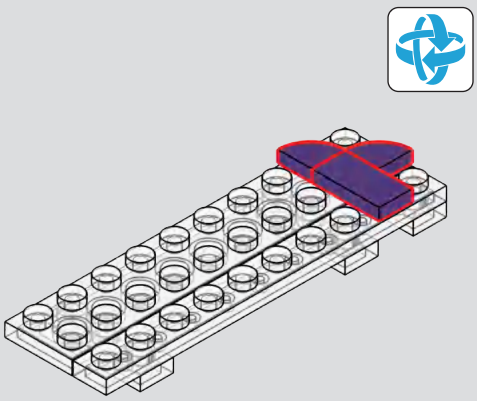

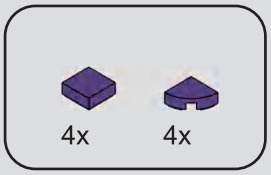


# 207

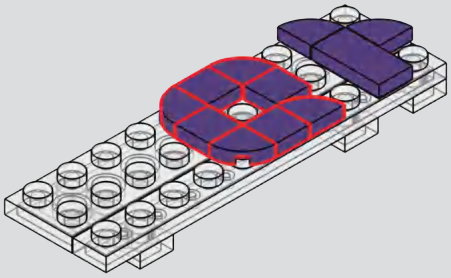

---

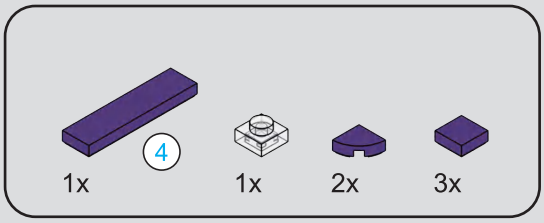

# 208

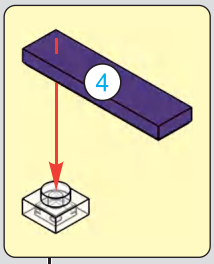


1

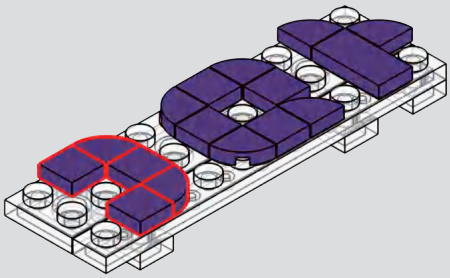

2

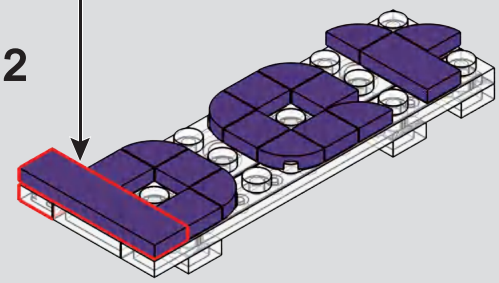

# 209

1

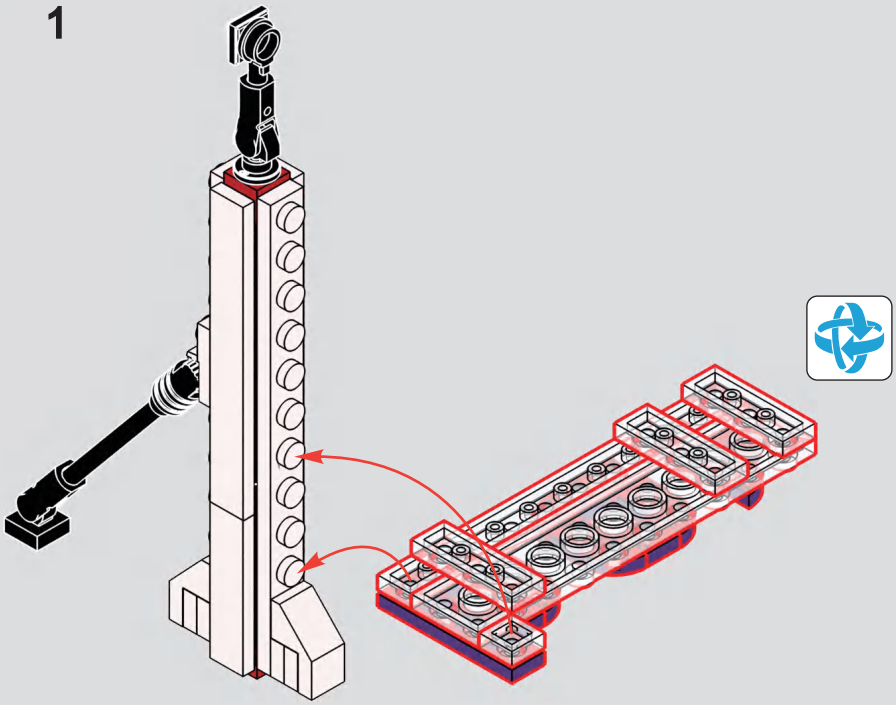

2

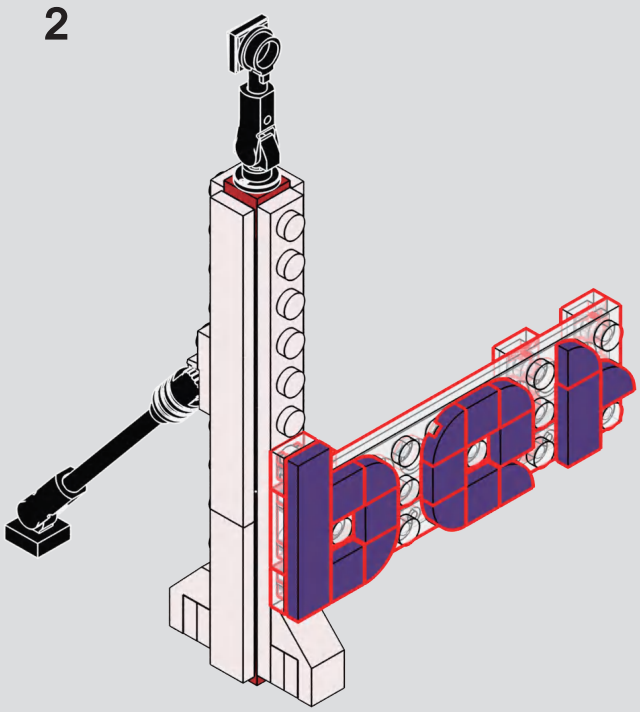

210

1

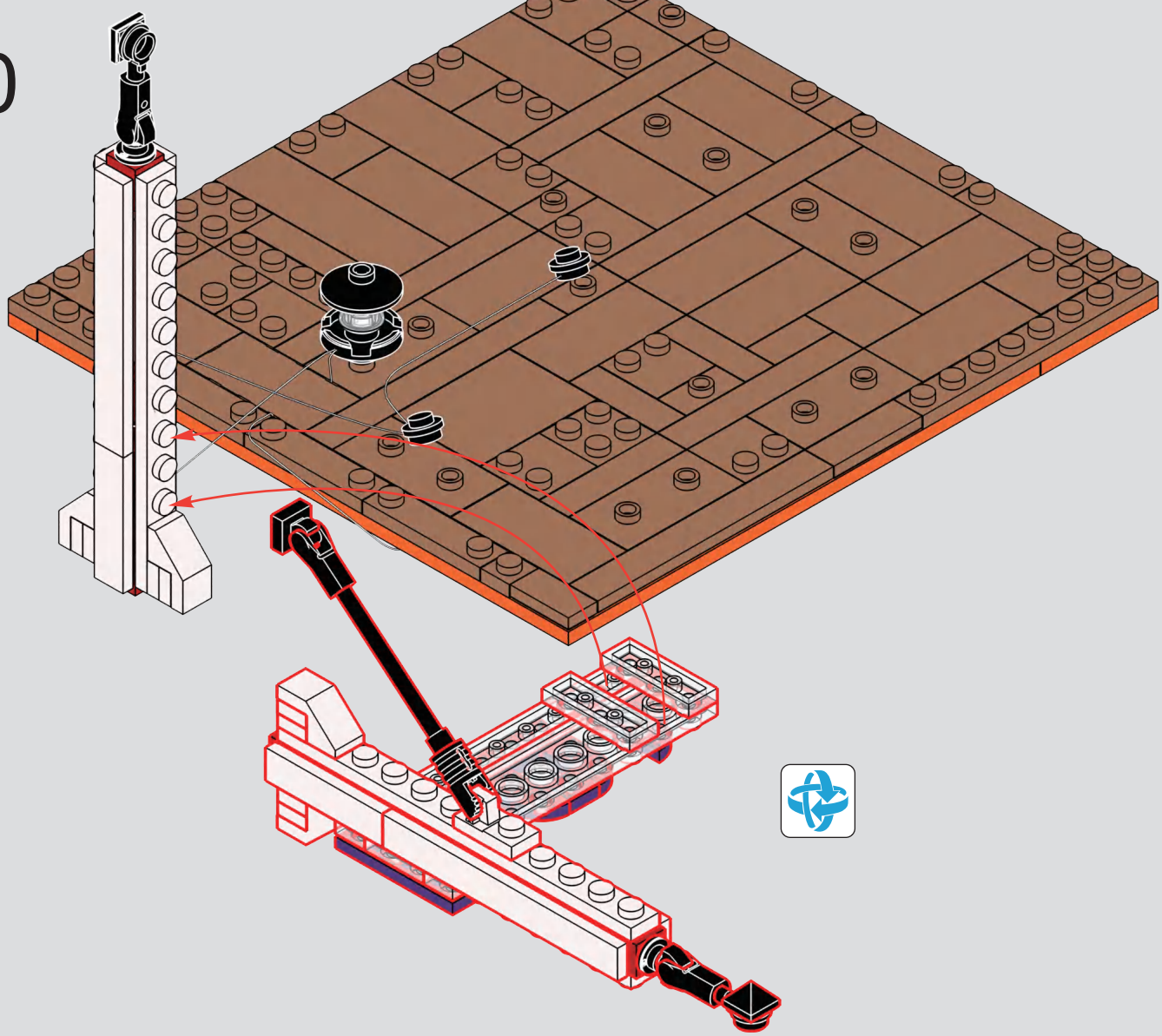

2

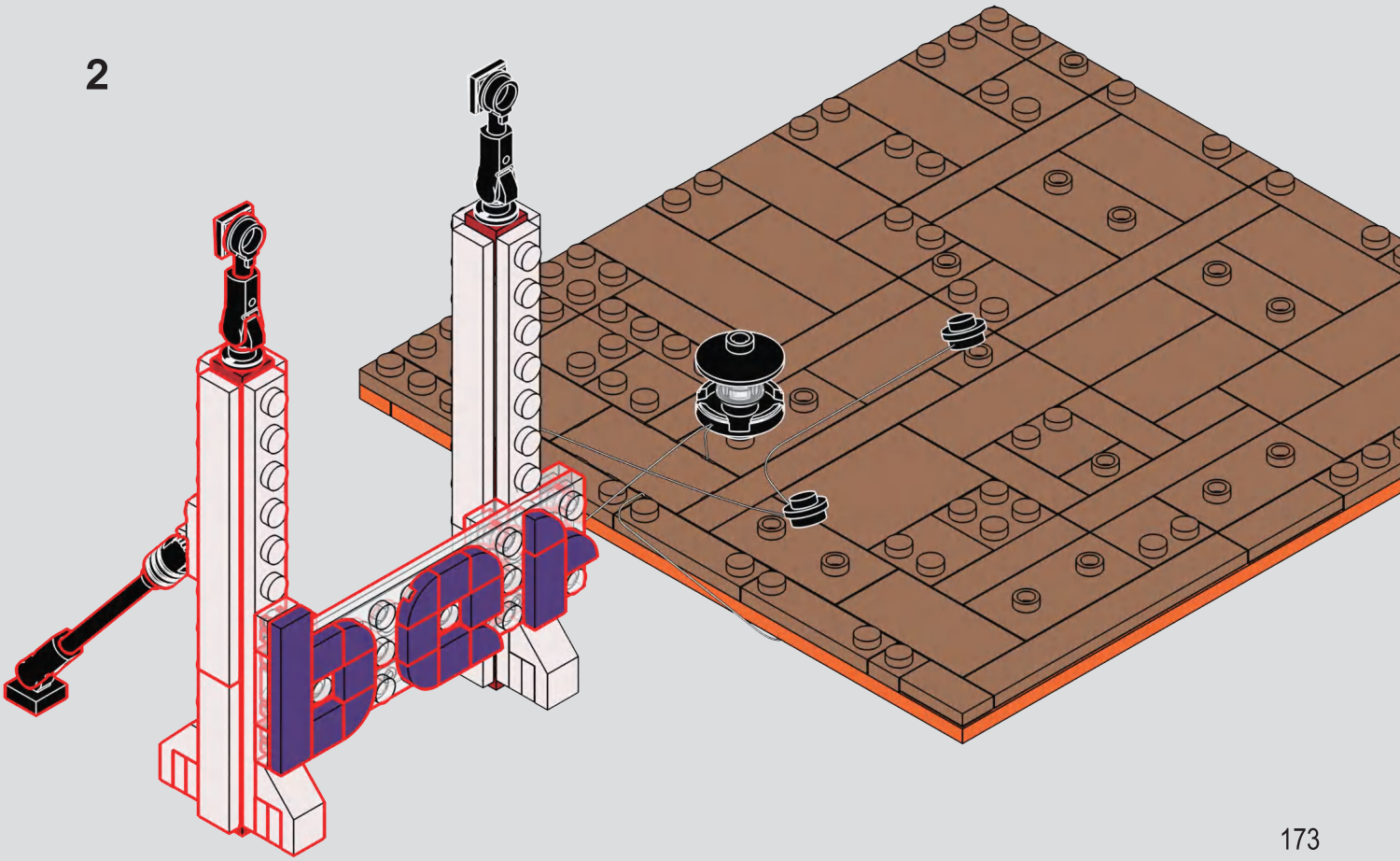

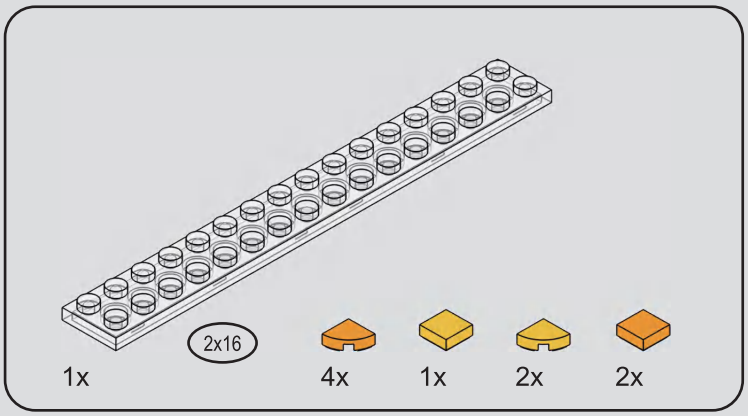


# 211

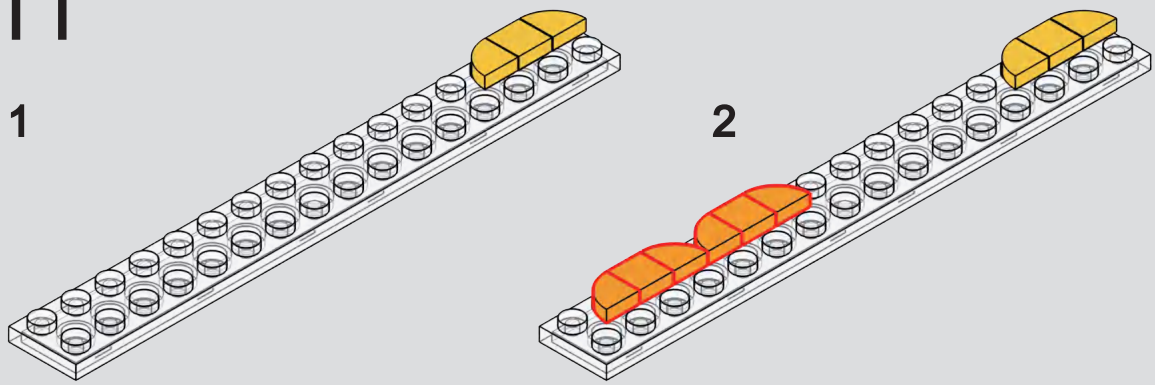


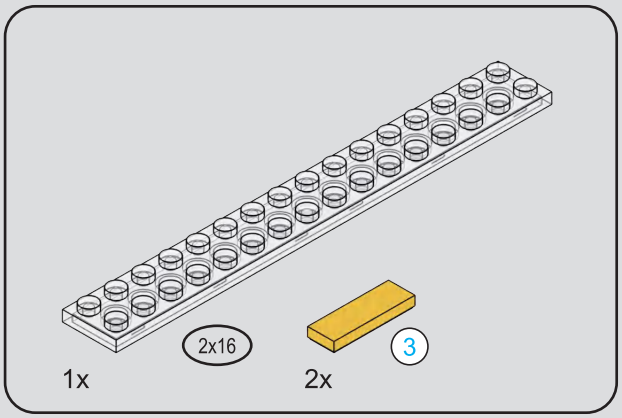


# 212

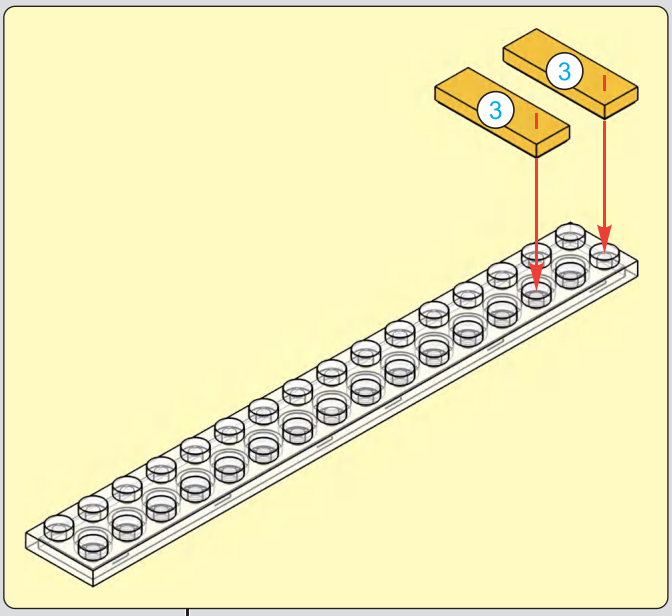


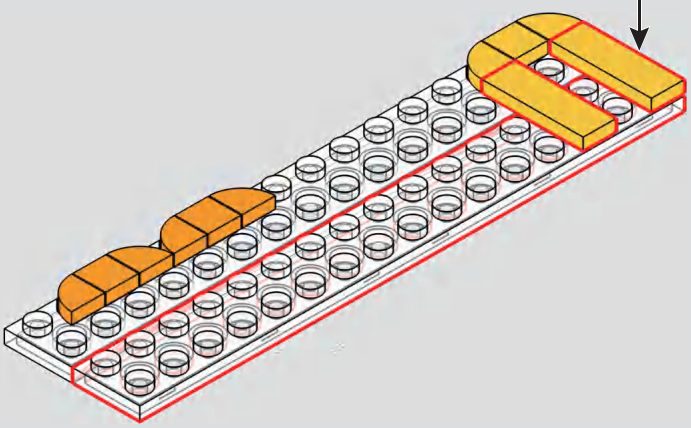

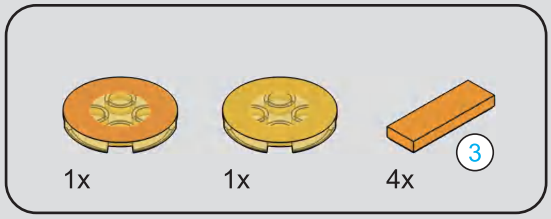


# 213

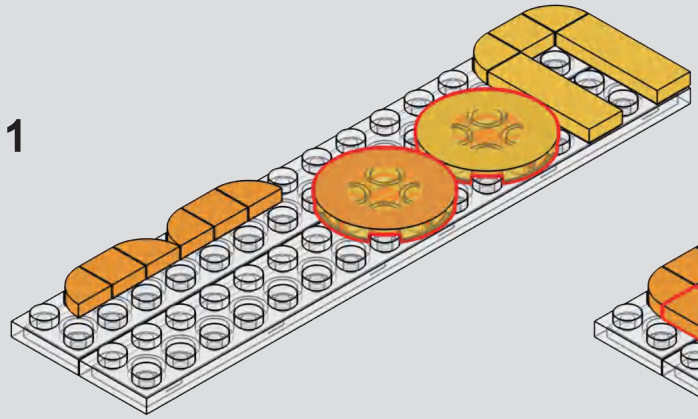


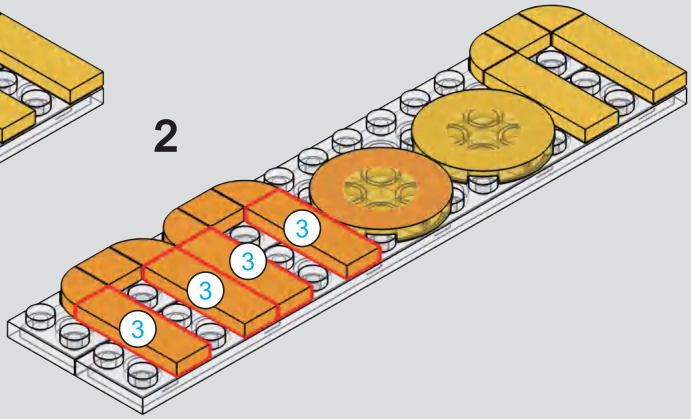


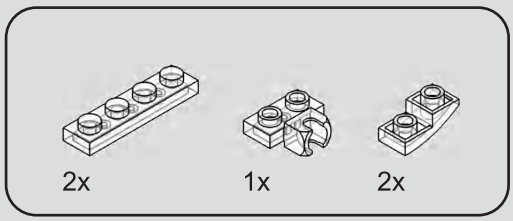


# 214

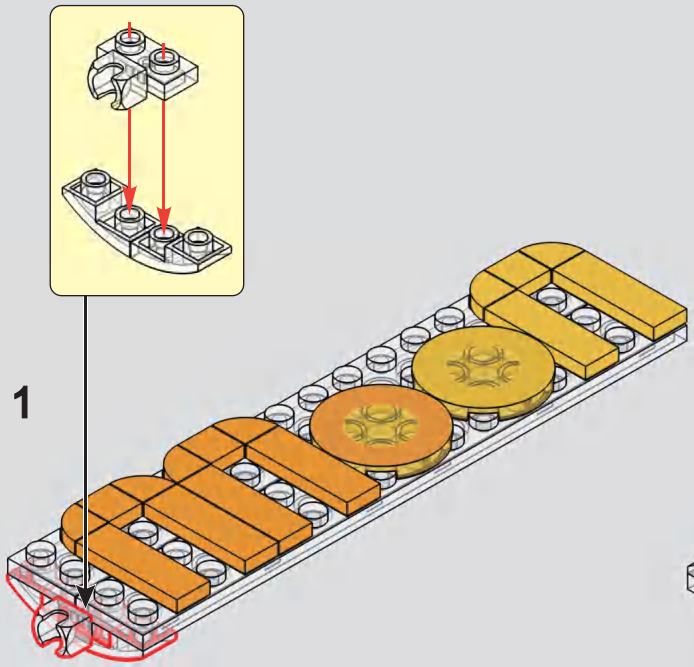


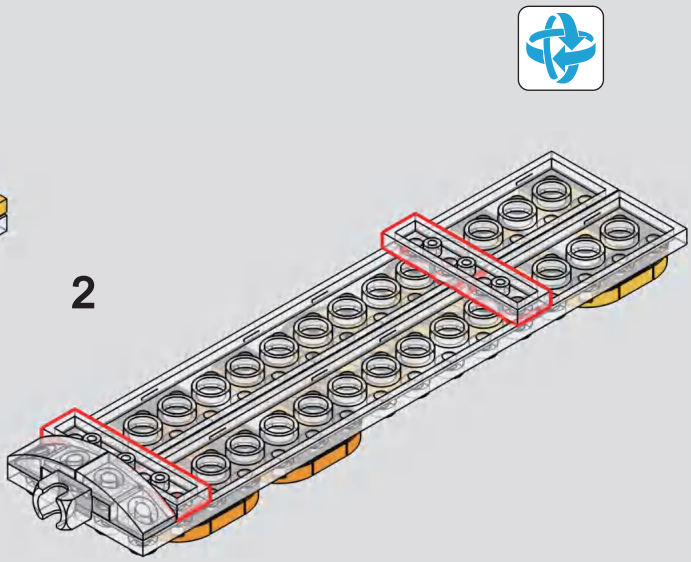

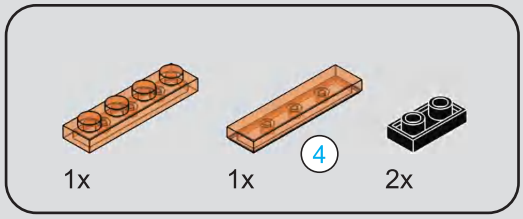


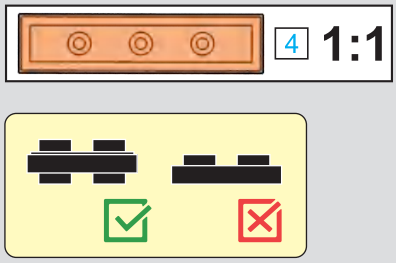


# 215

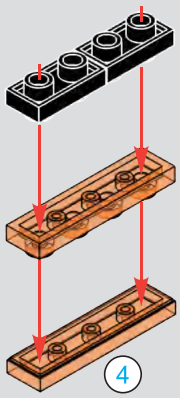


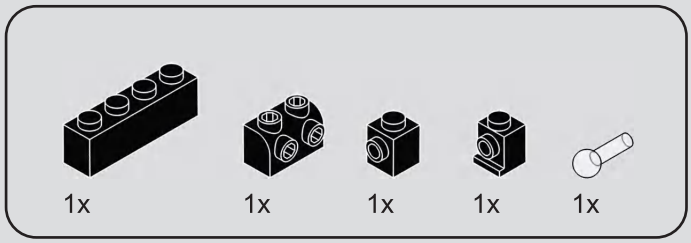


# 216

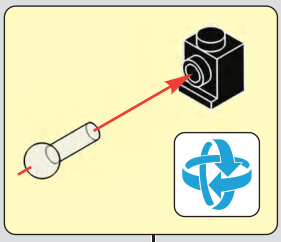

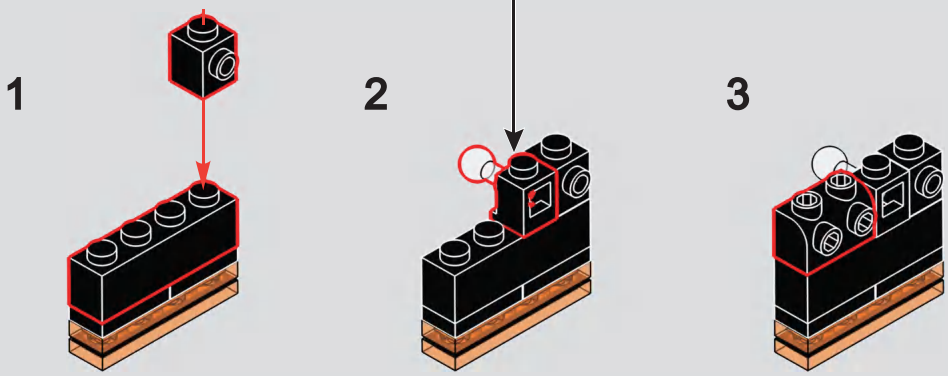

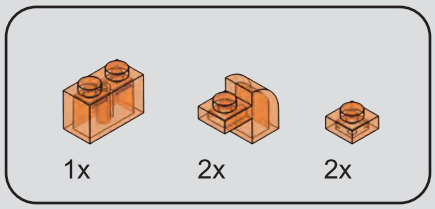


# 217

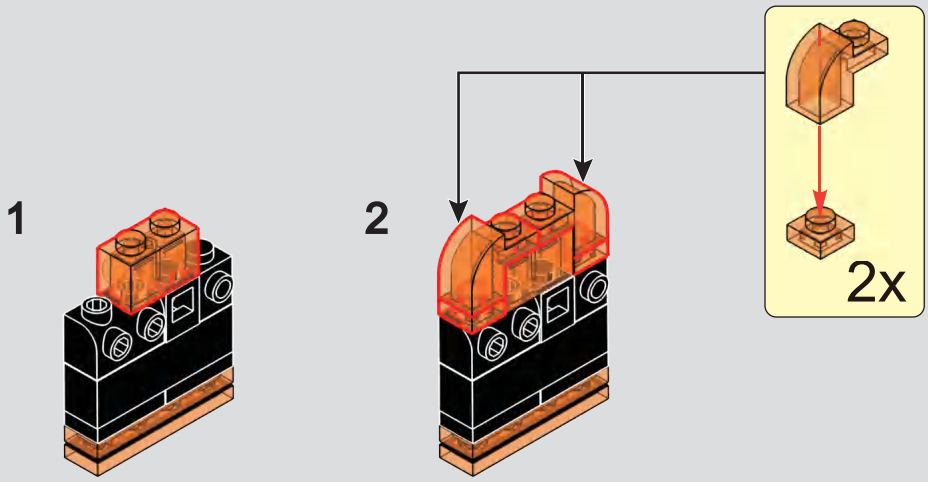


---

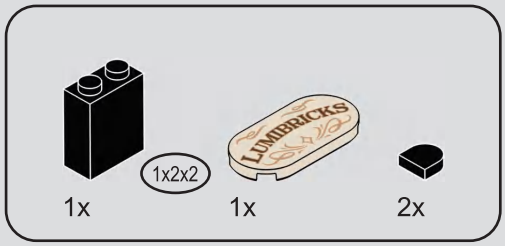


# 218

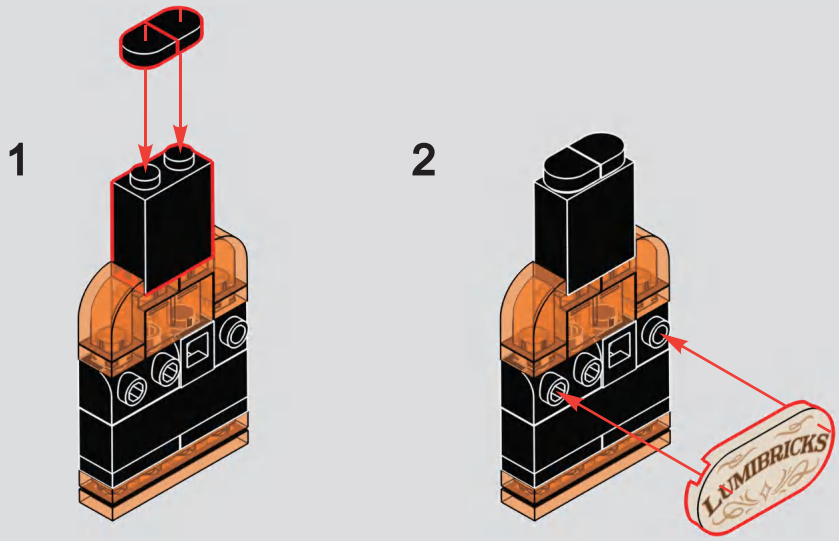

# 219

1

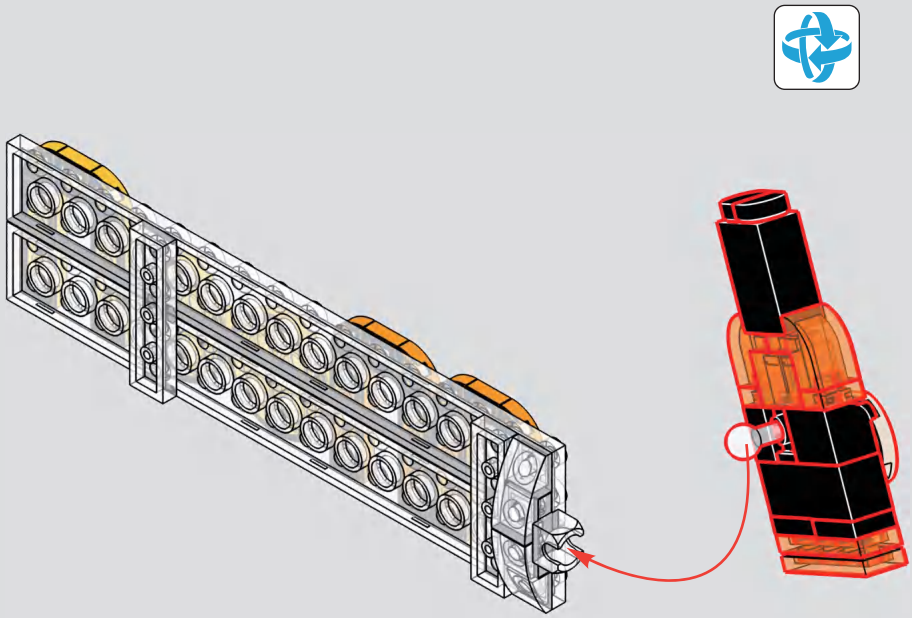

2

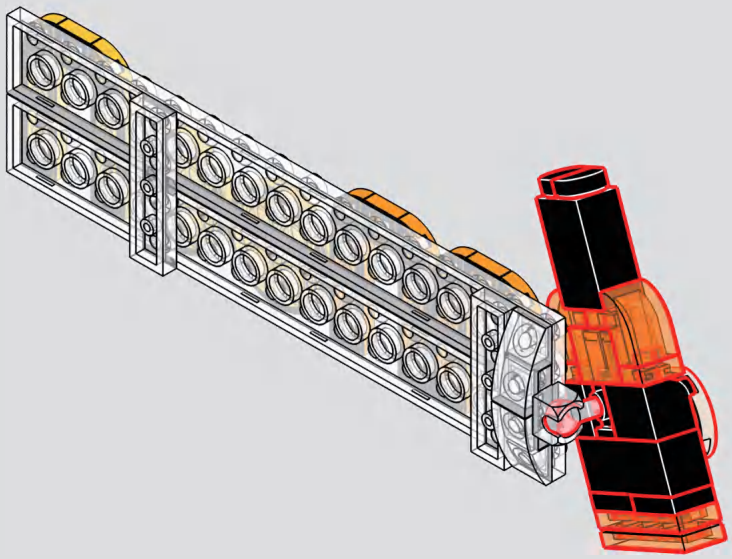

220

1

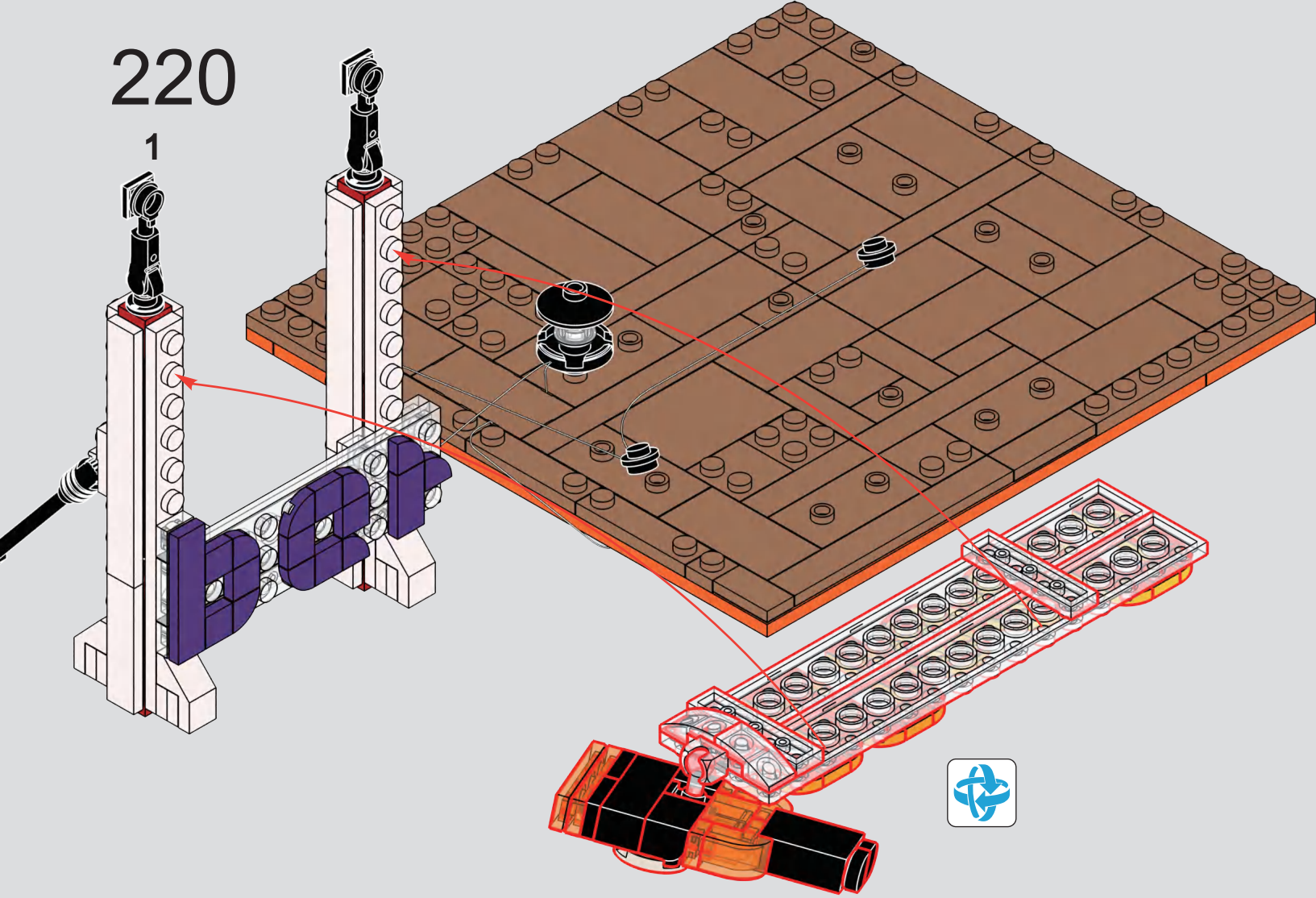

2

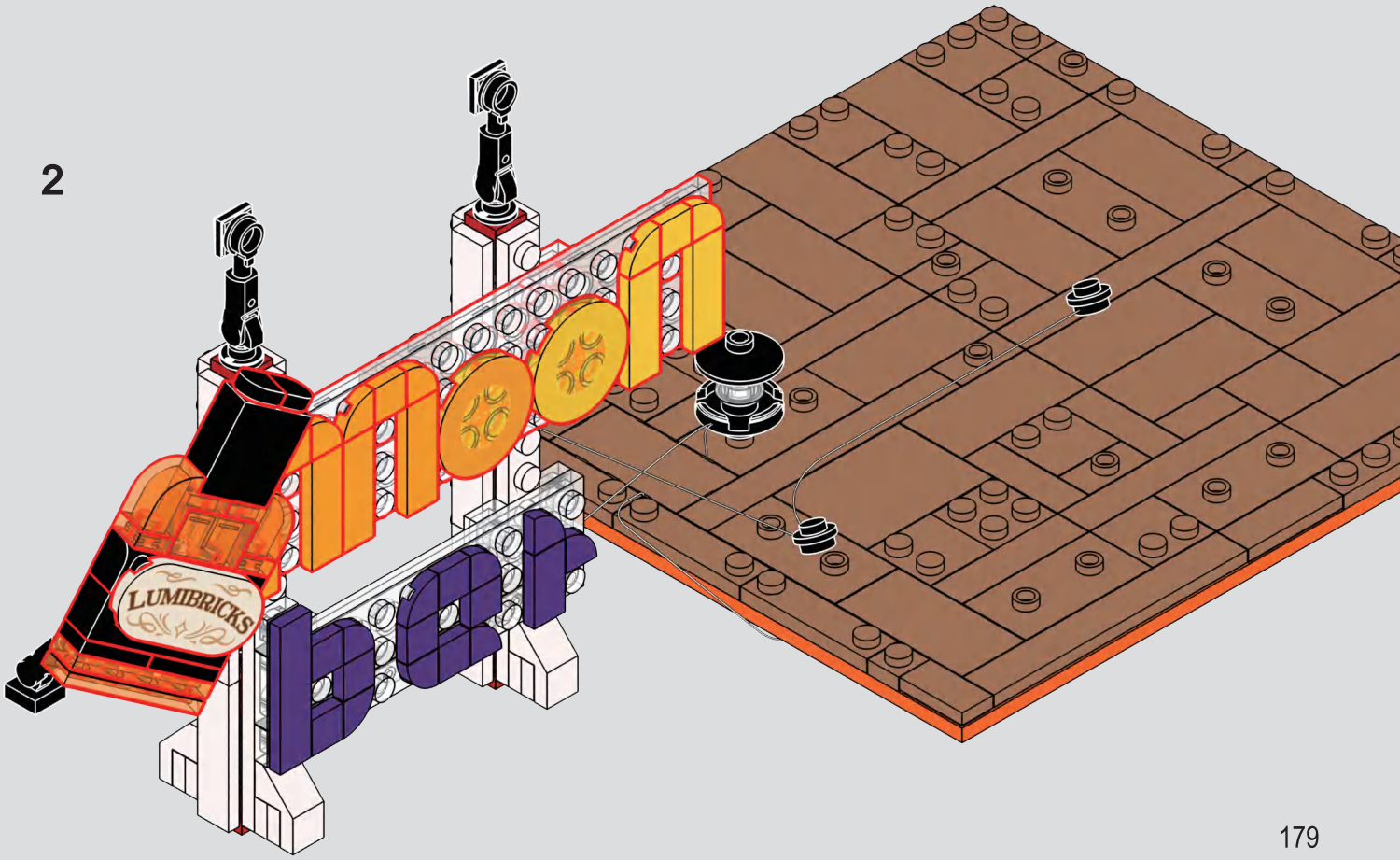

221

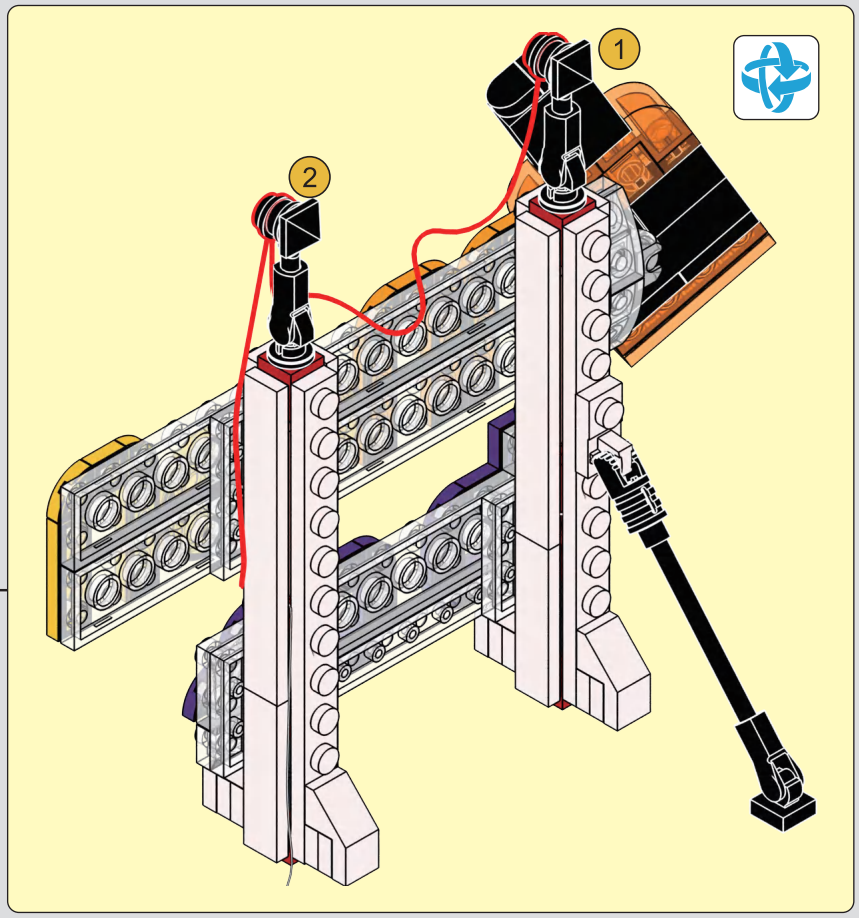


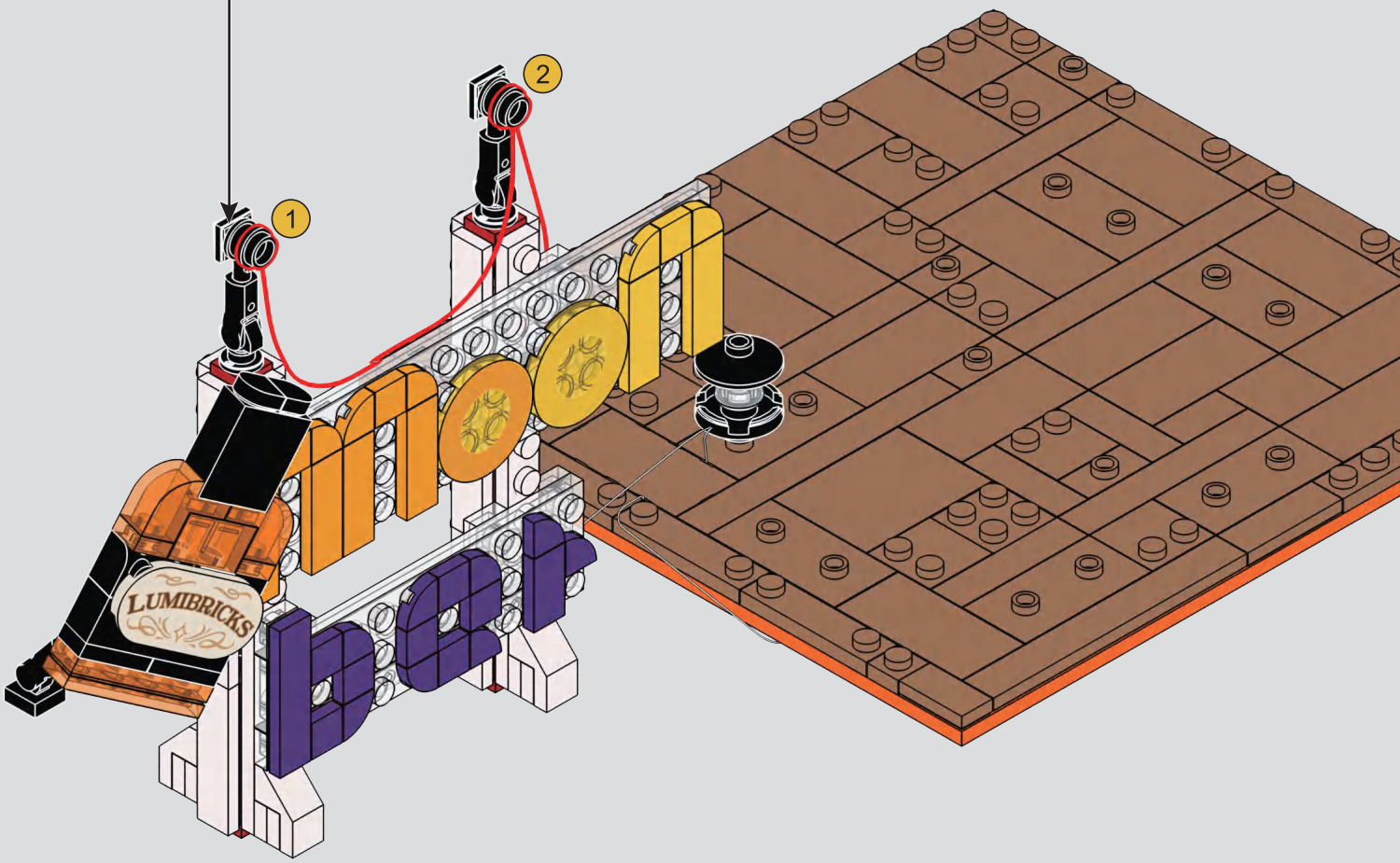

222

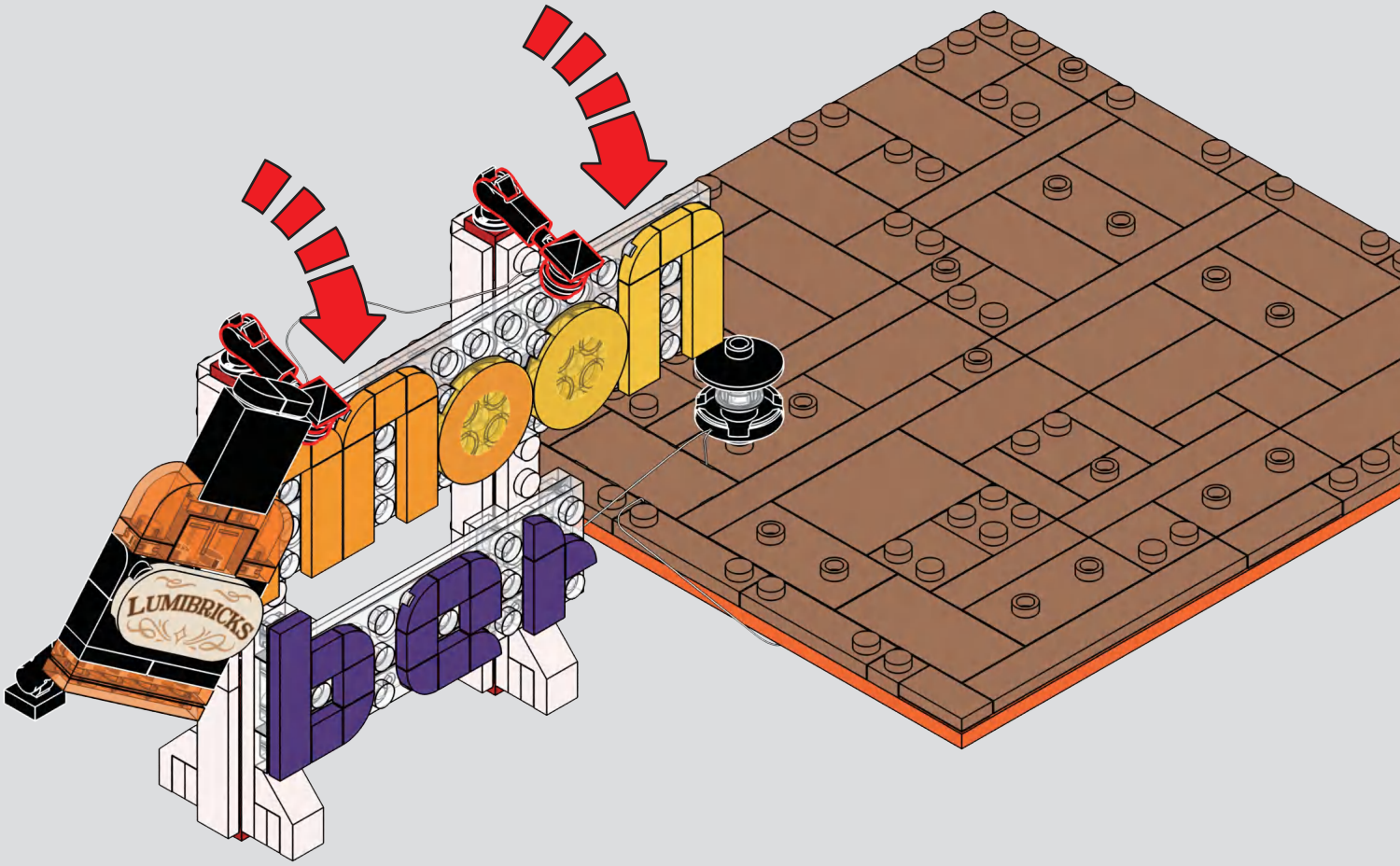

# 223

1

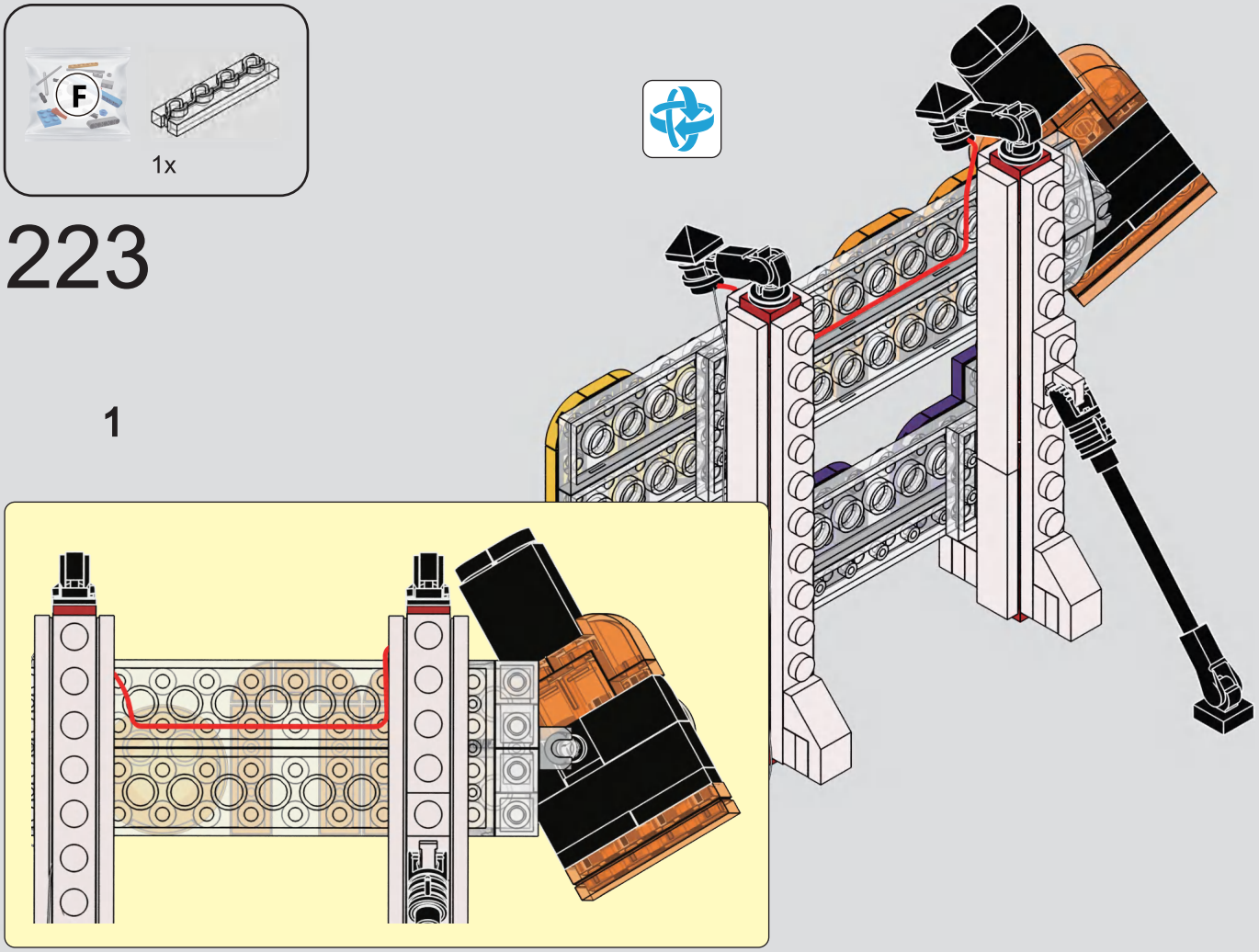

2

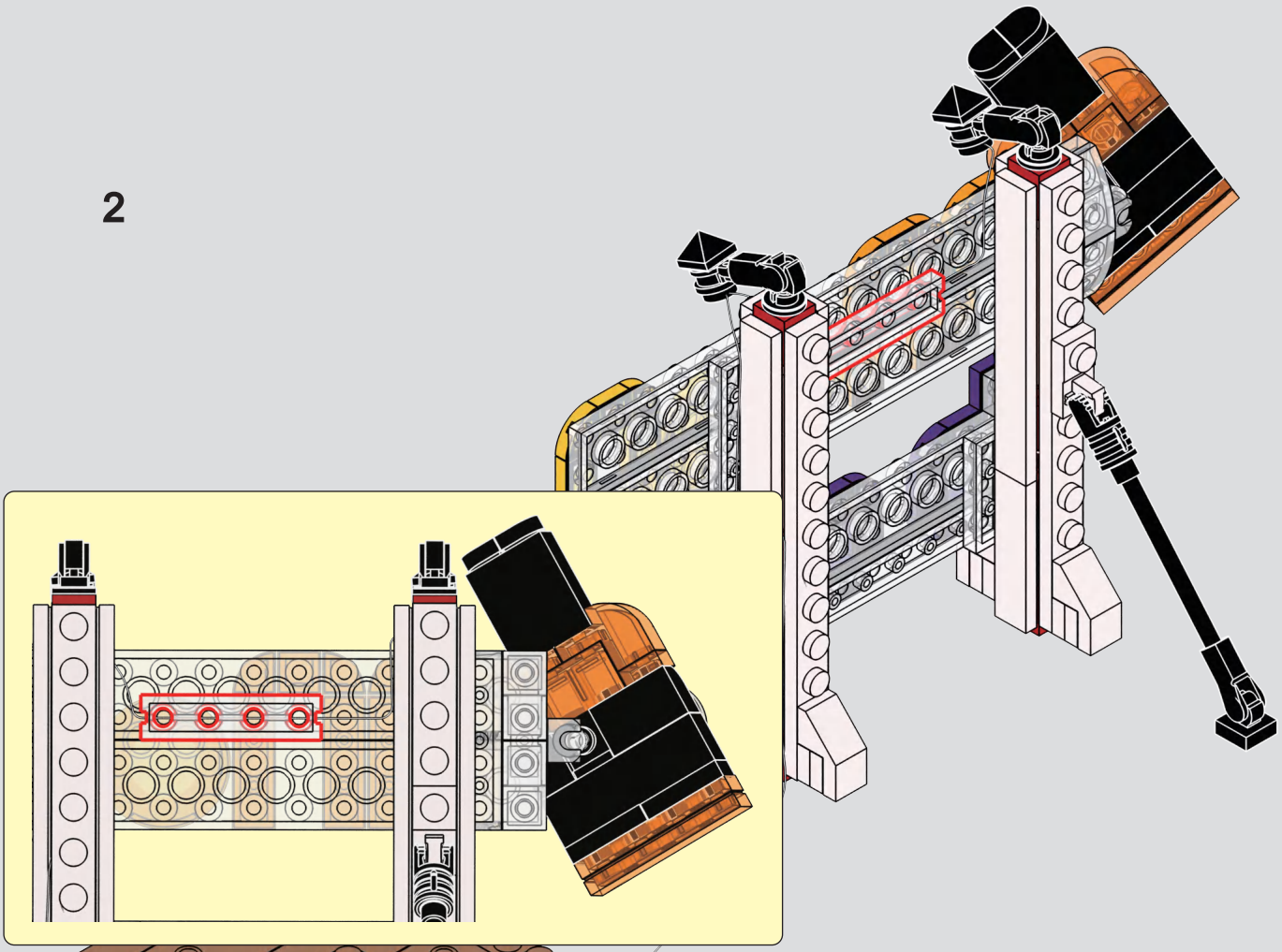

224

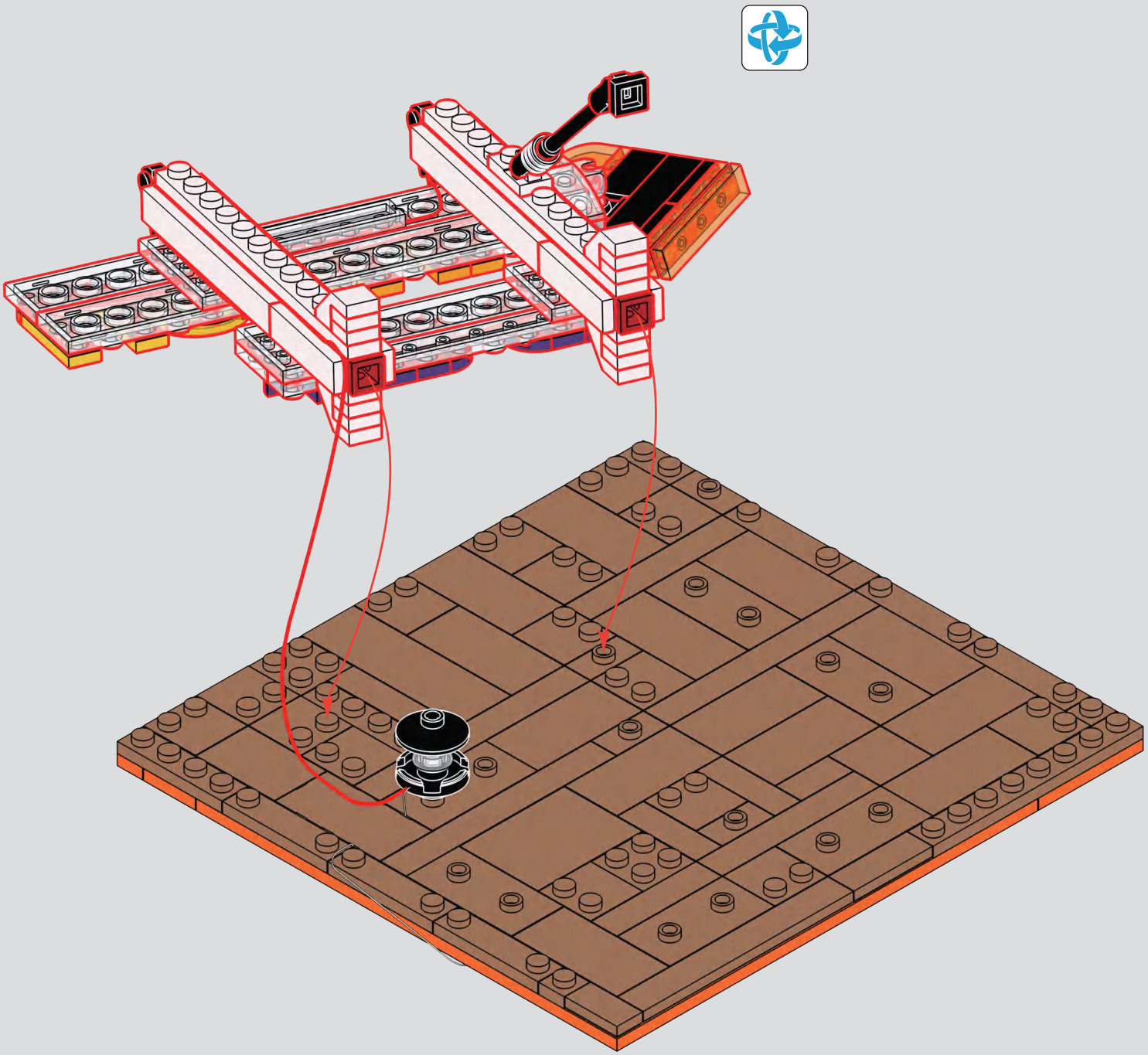

225

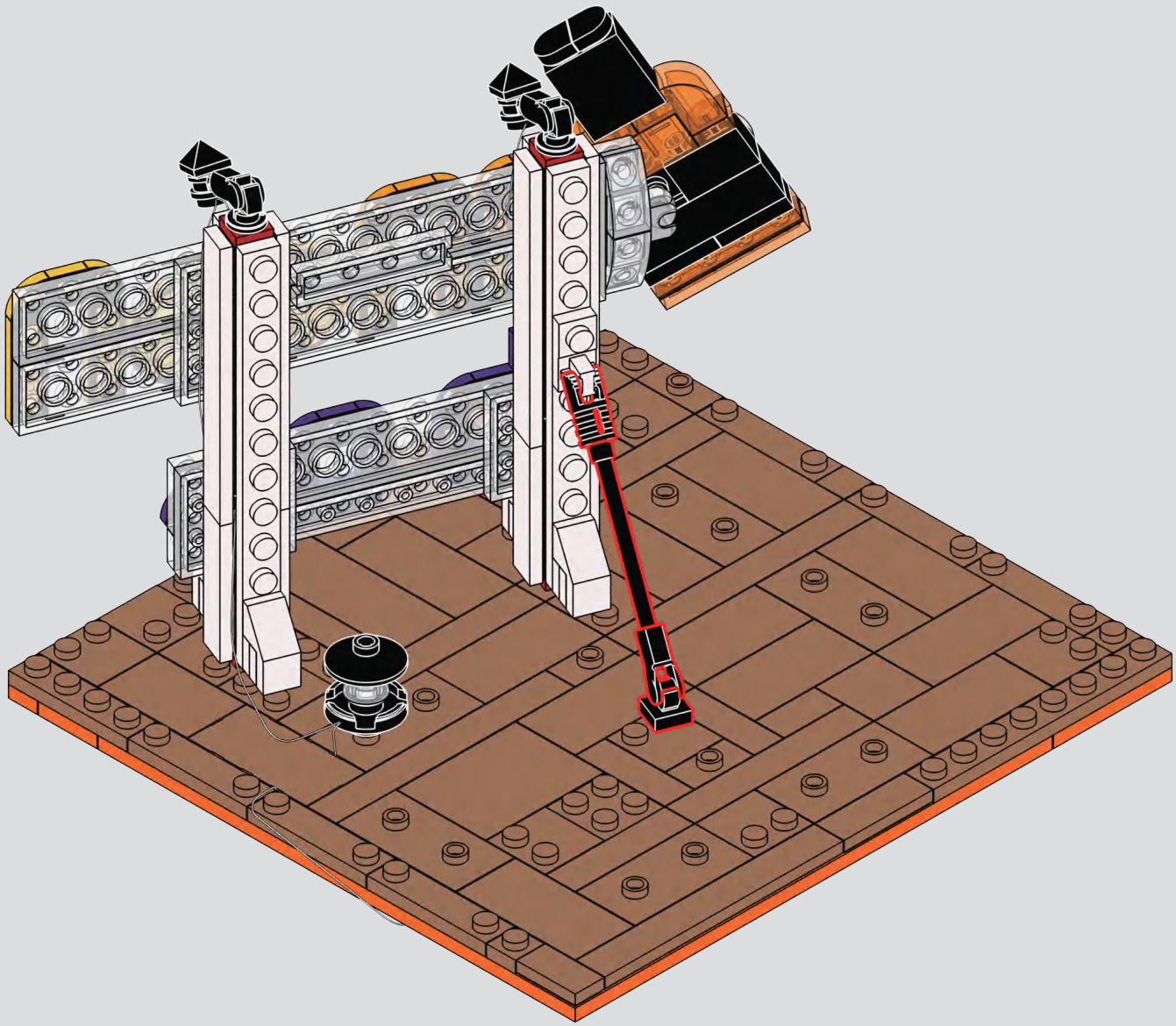

12
F
LUMIBRICKS
DON'T
OVER
DRINKS

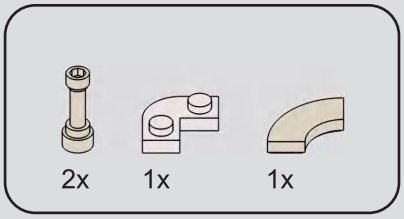


# 226

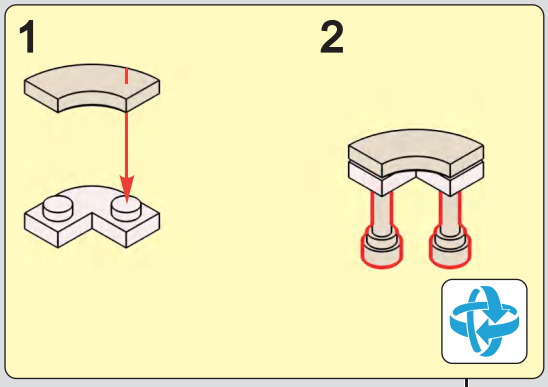


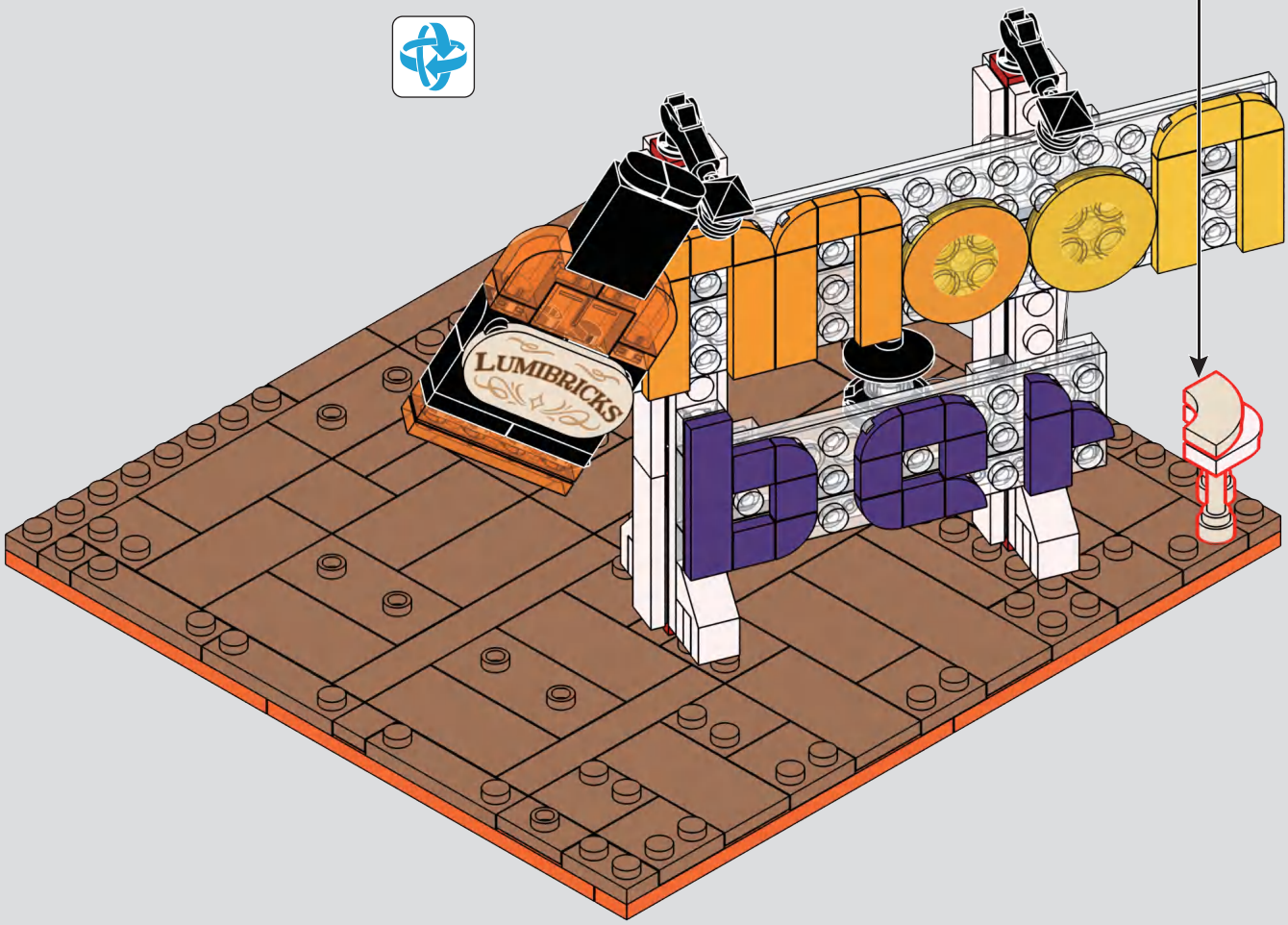

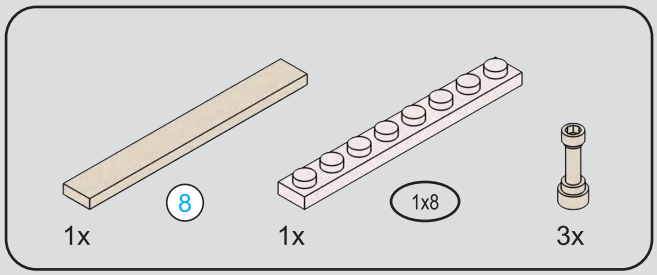


8 1:1

# 227

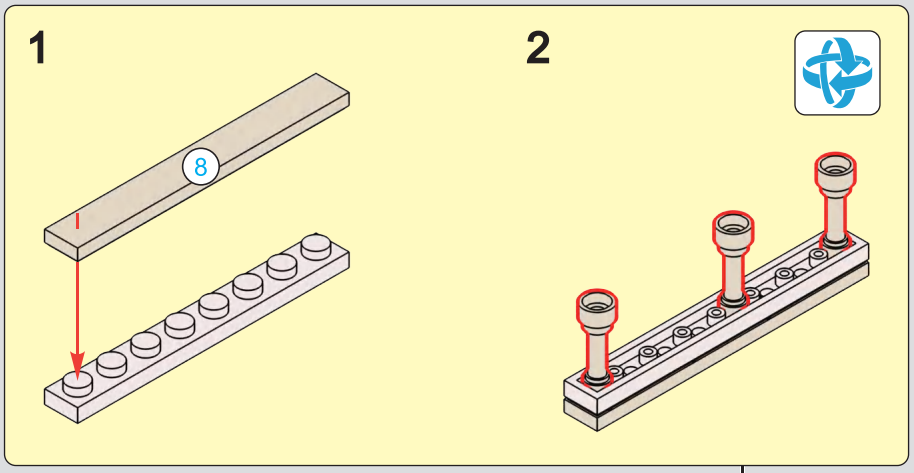


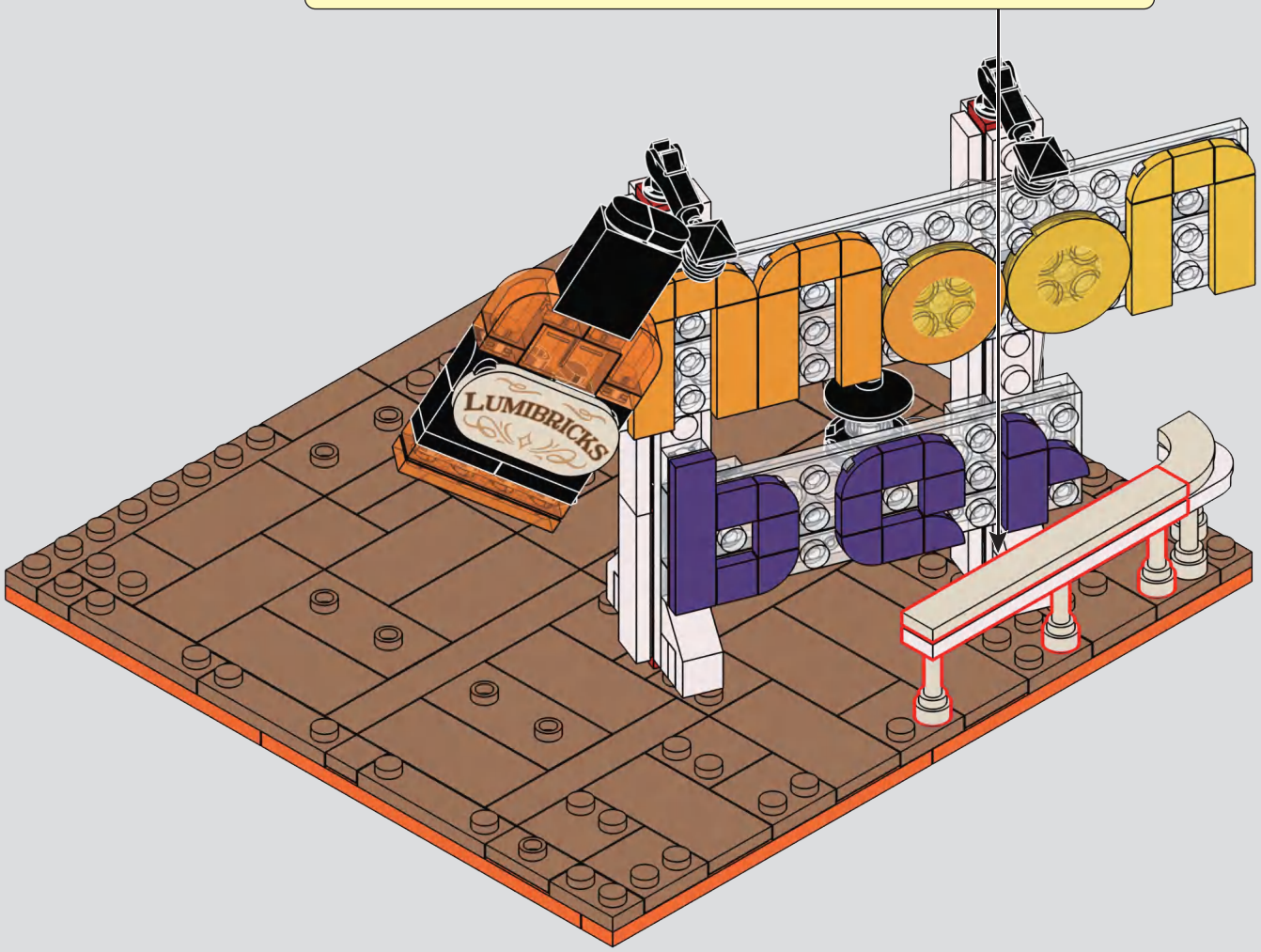

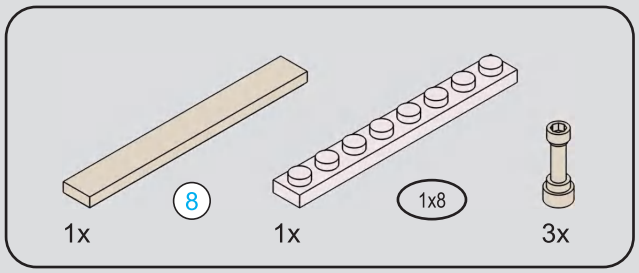


8 1:1

# 228

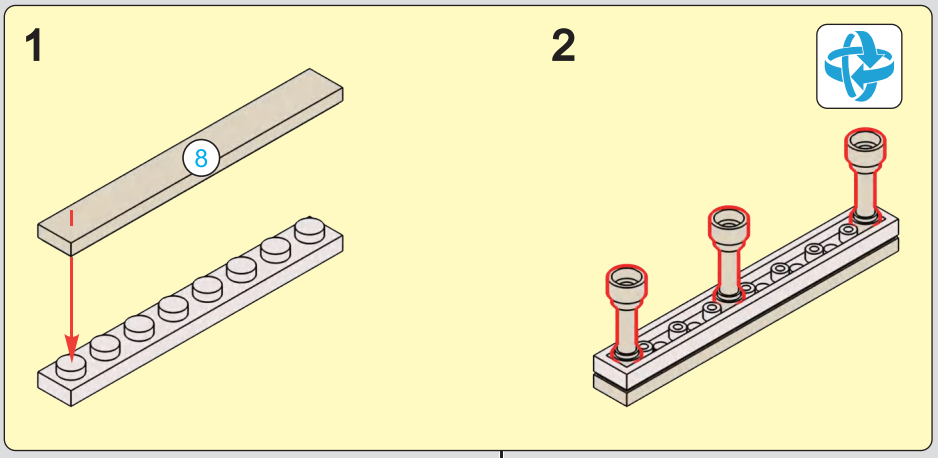


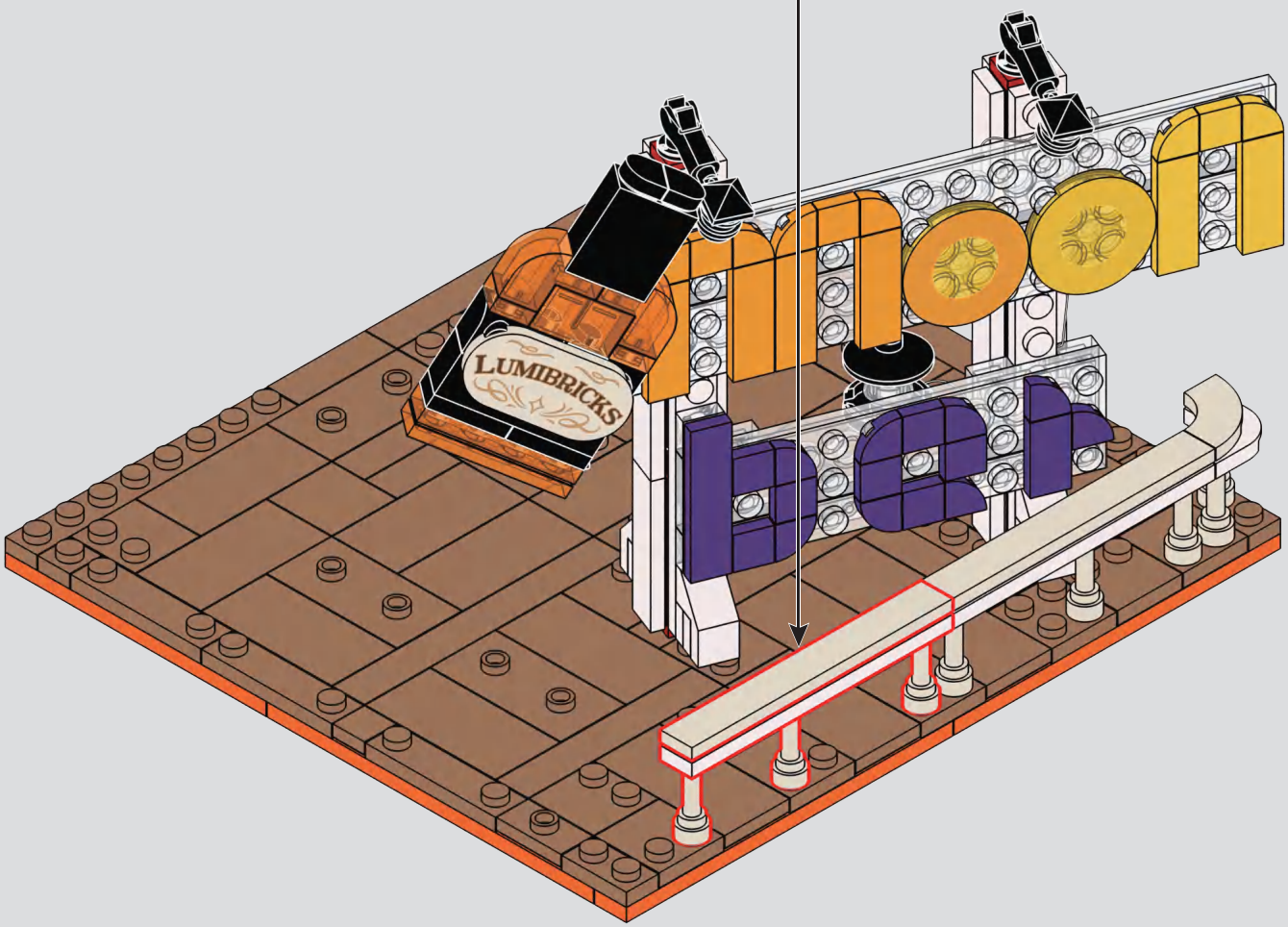

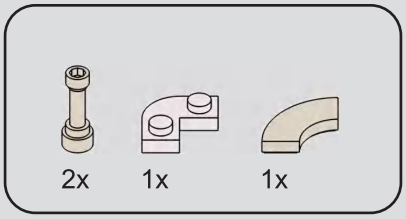


# 229

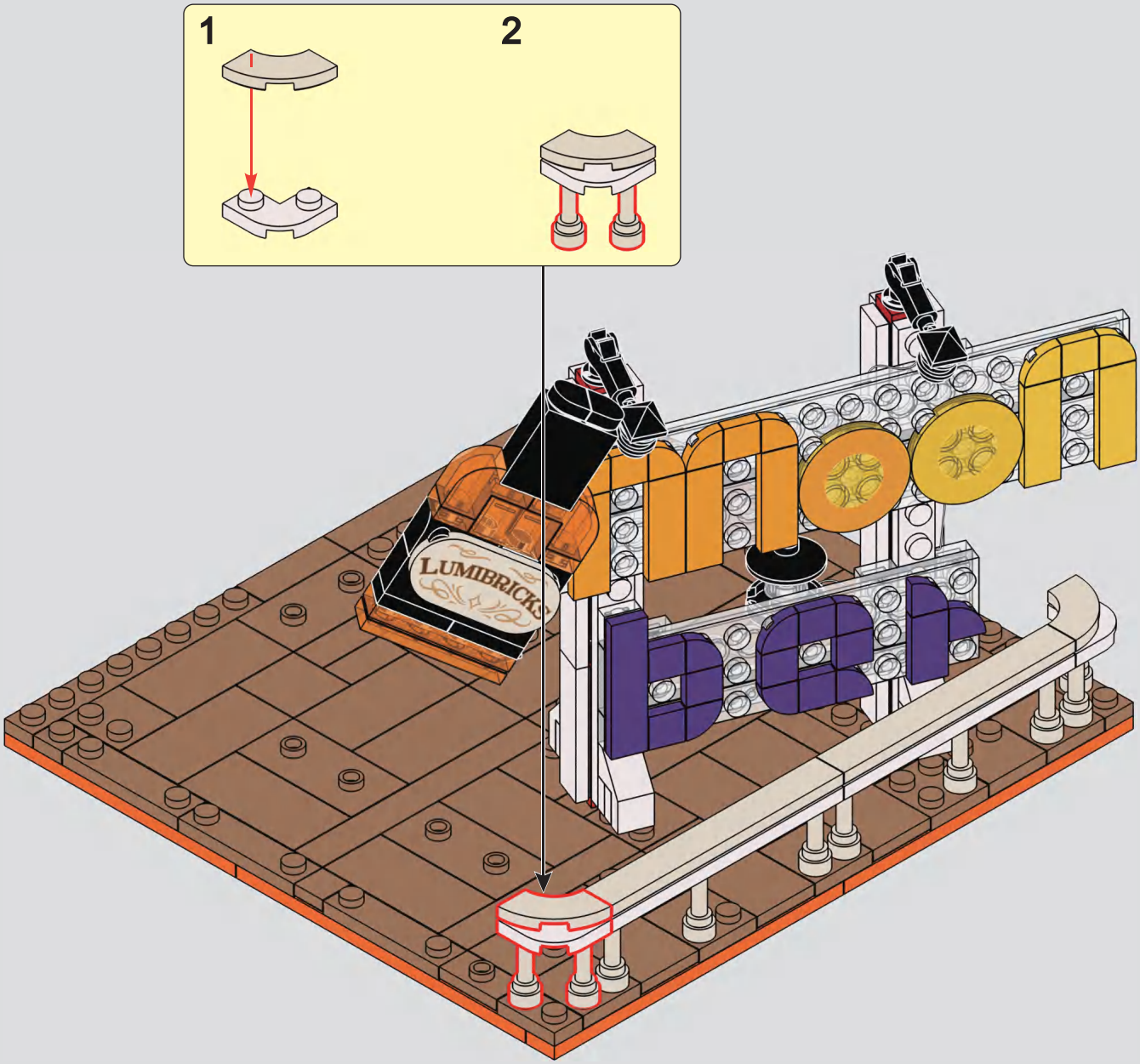

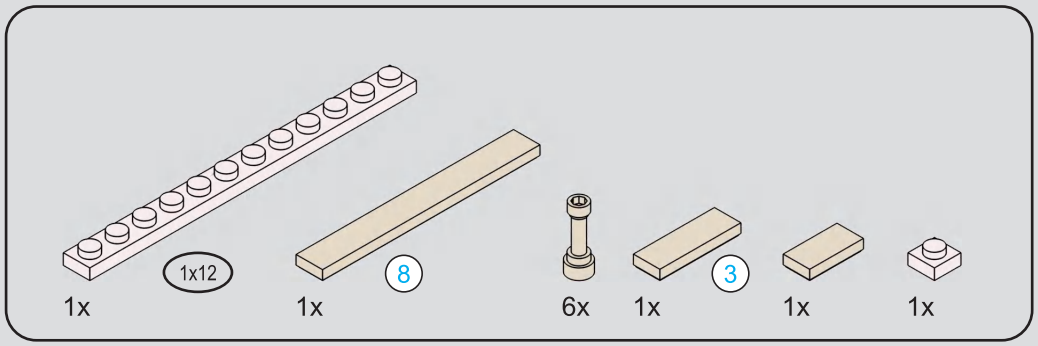


# 230

1

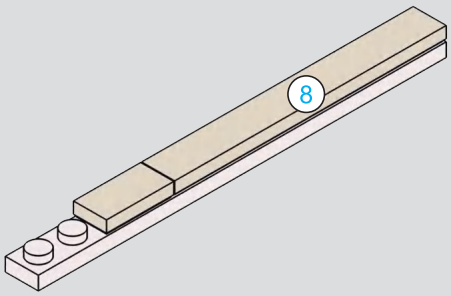


2

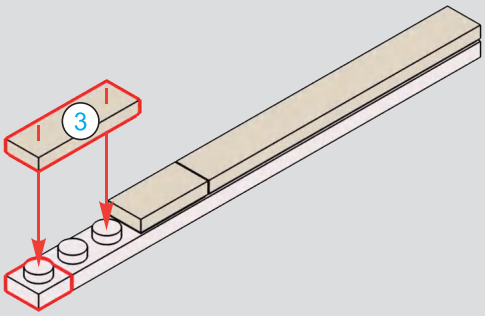


3

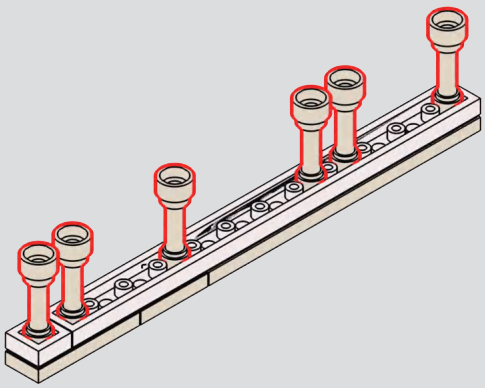

231

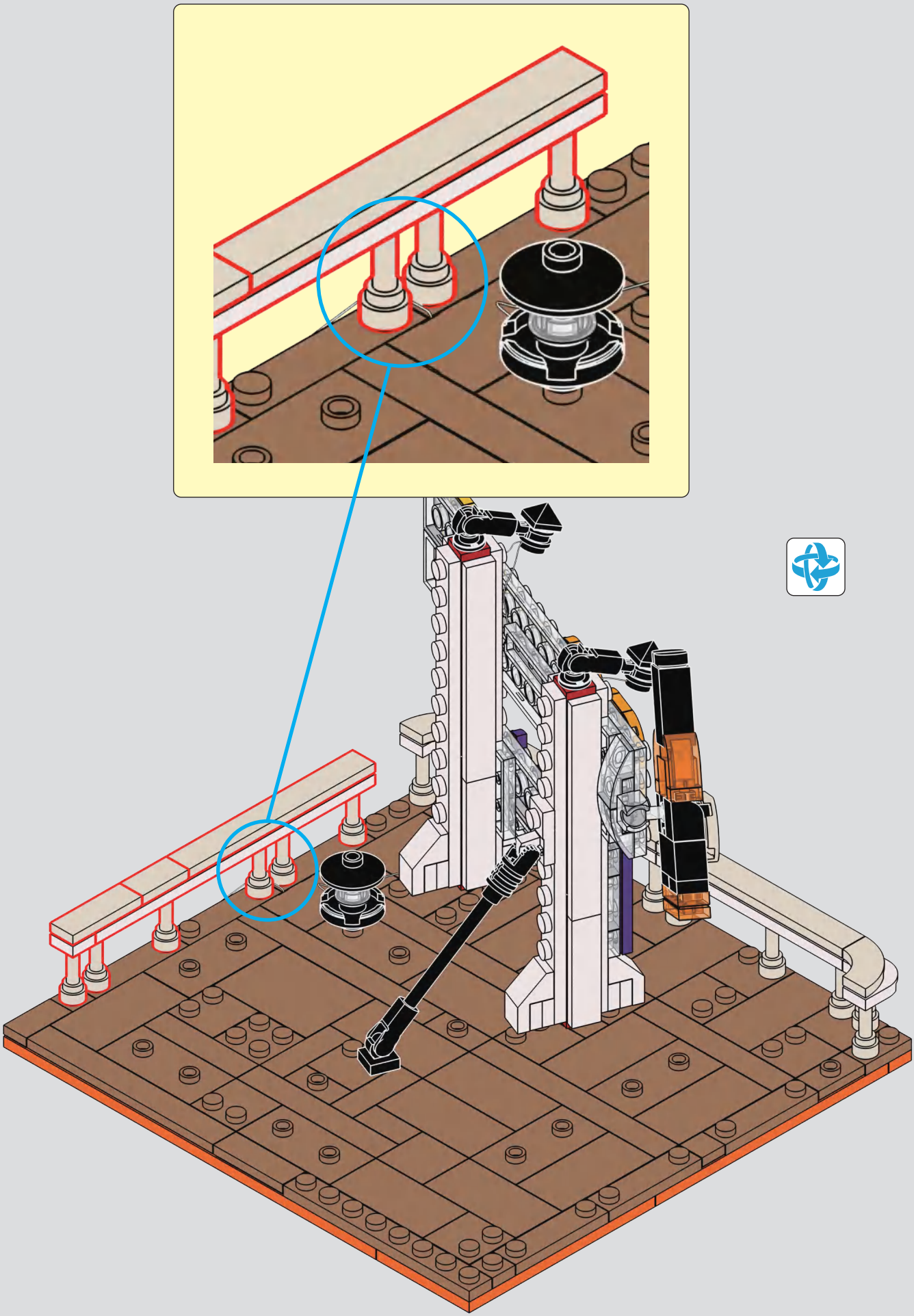

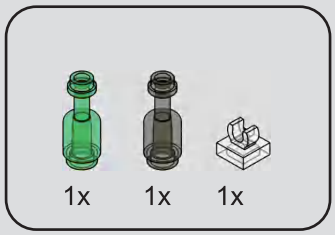


# 232

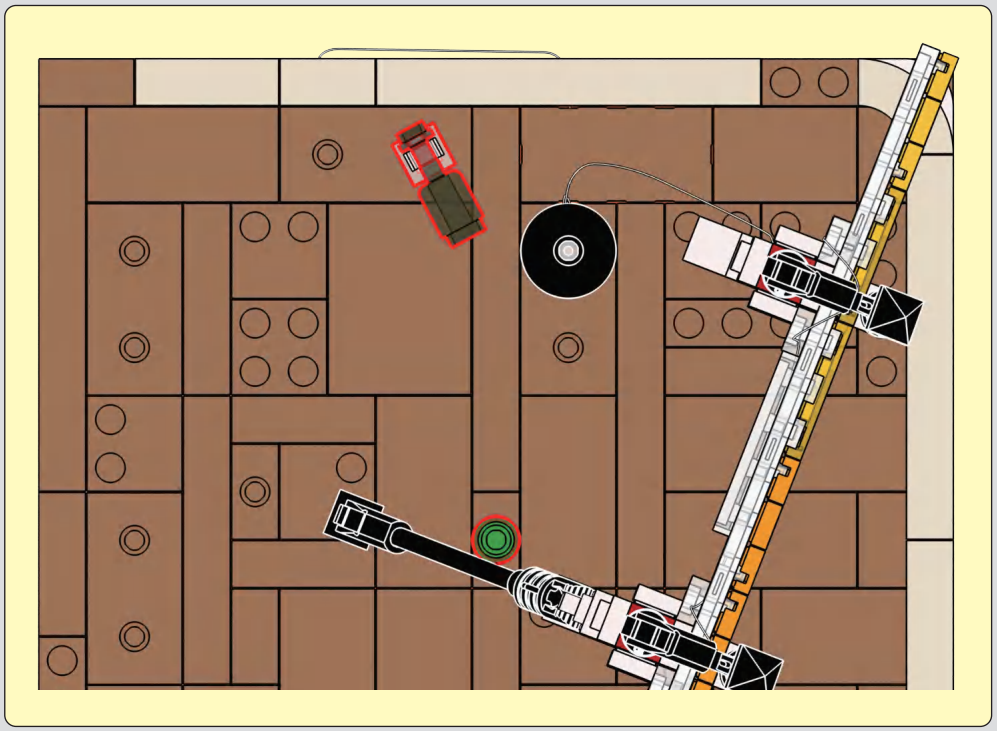

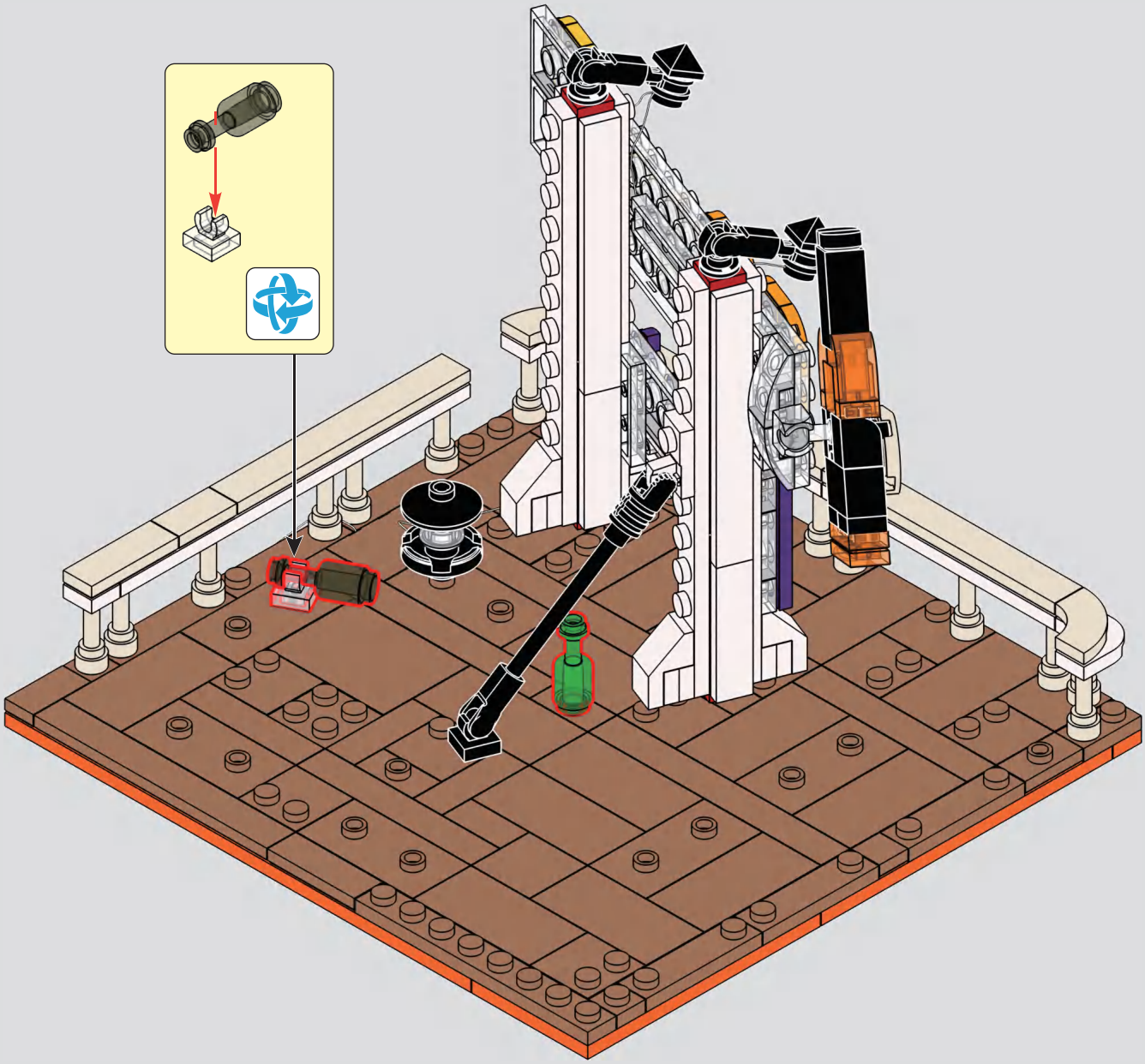

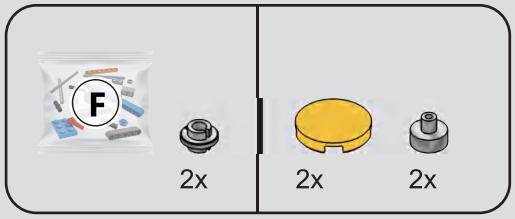


# 233

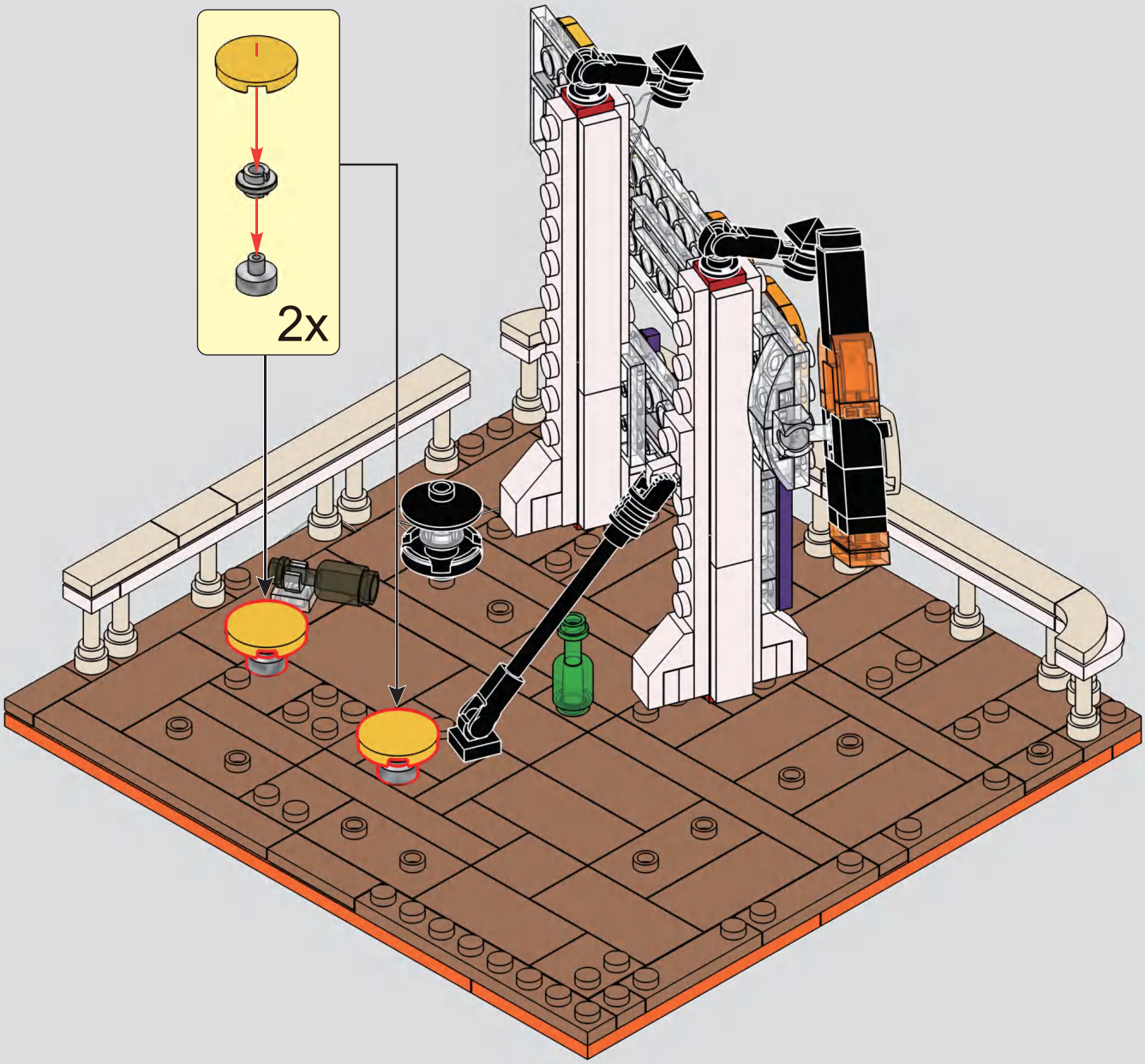

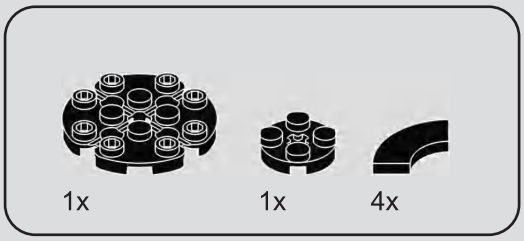


# 234

1

2

---

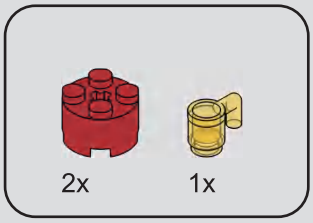


# 235

1

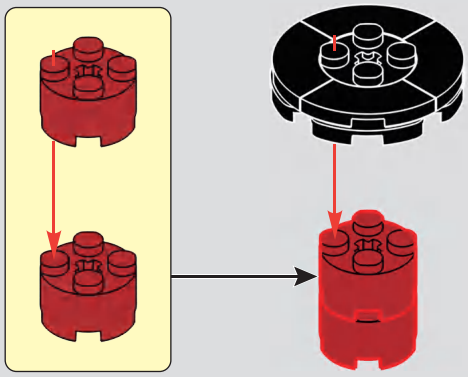

2

236

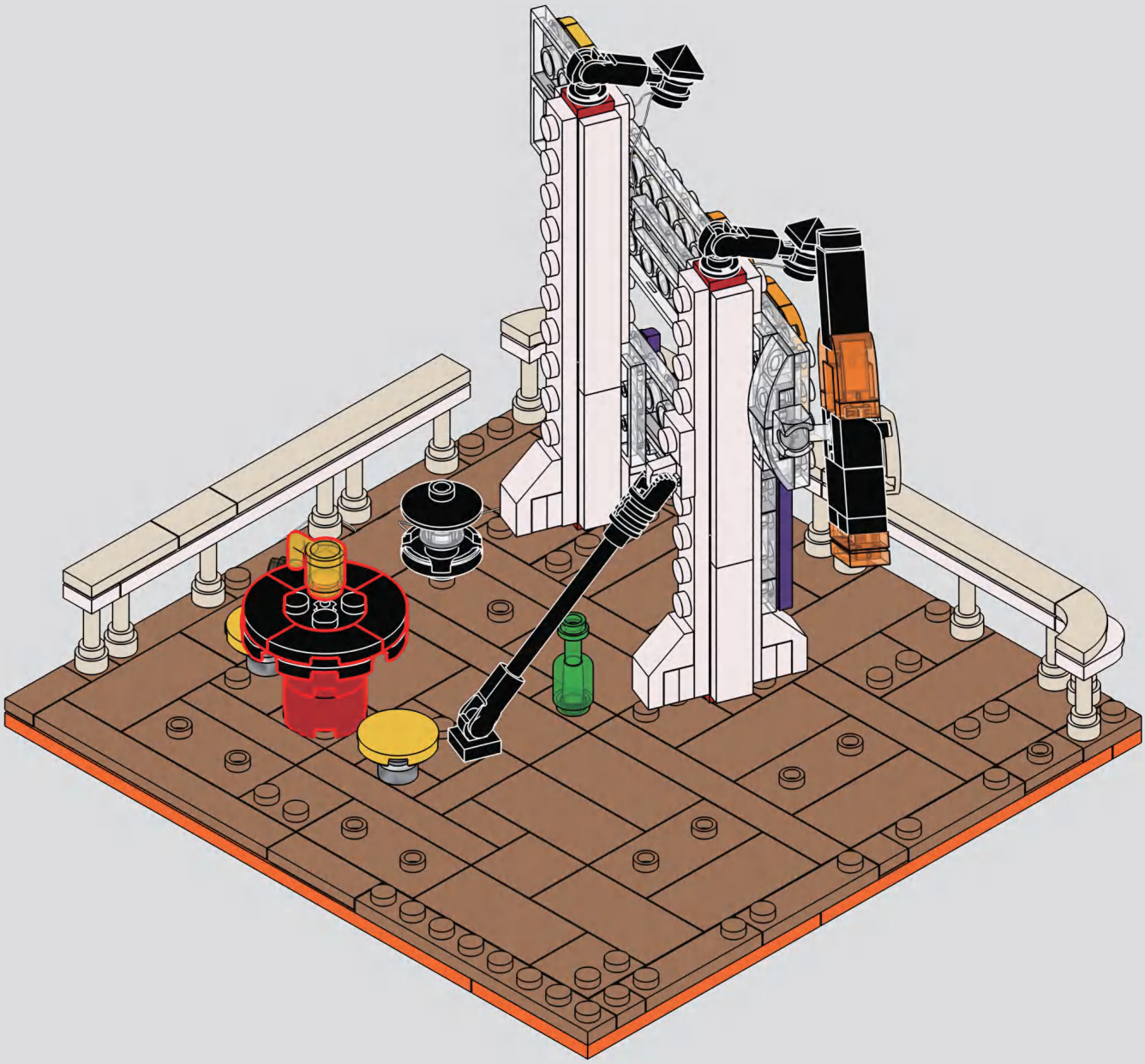

# 237

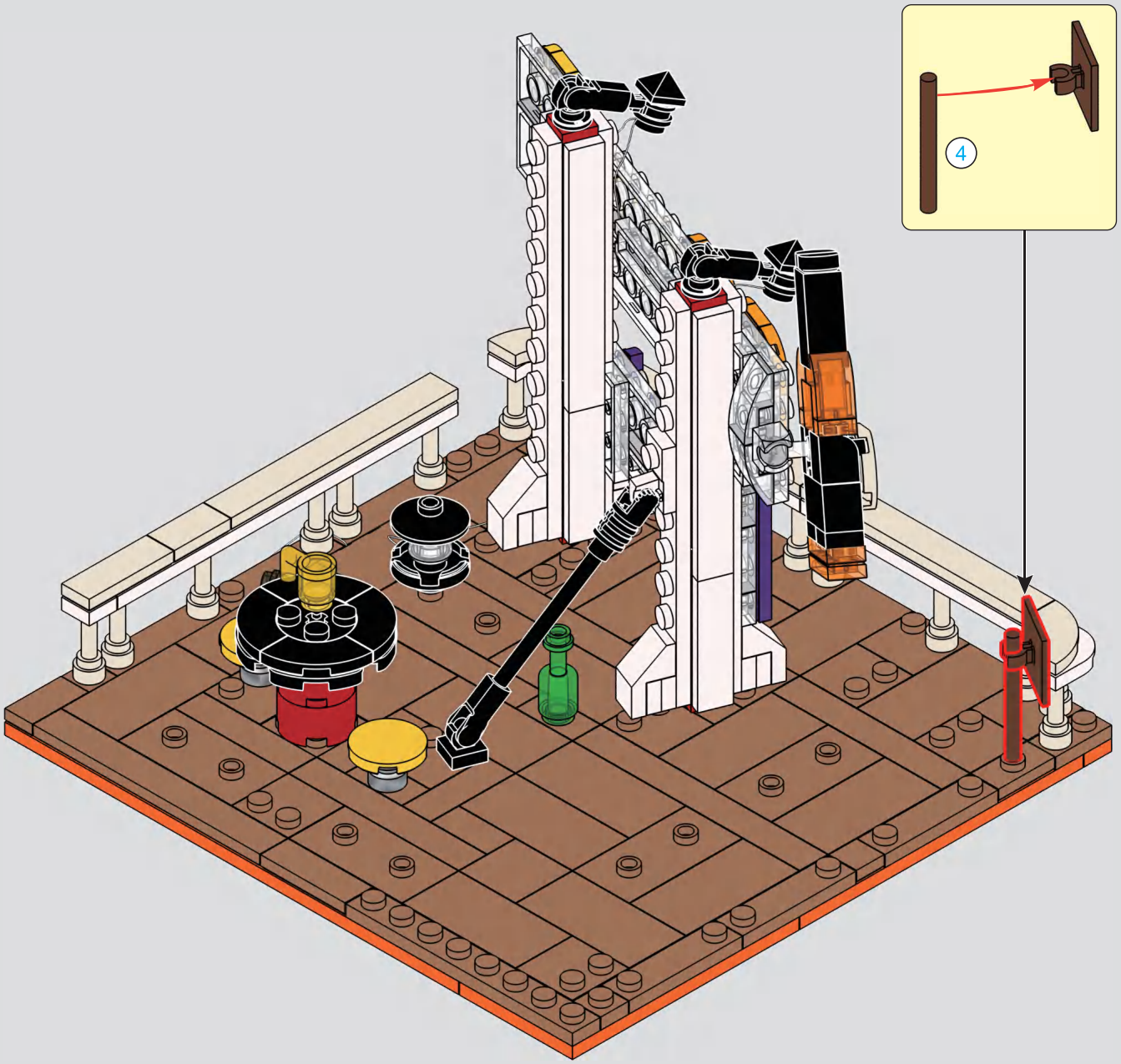

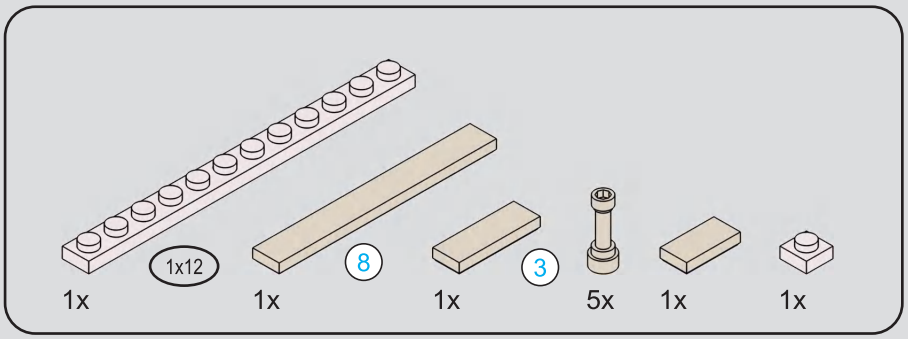


# 238

1

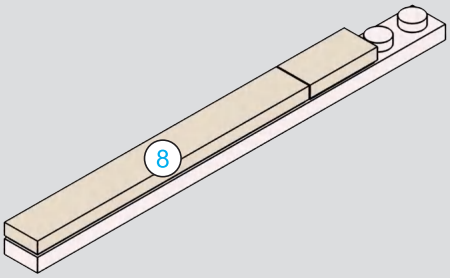


2

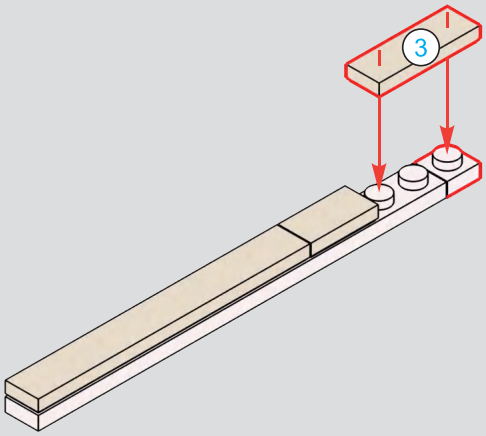


3

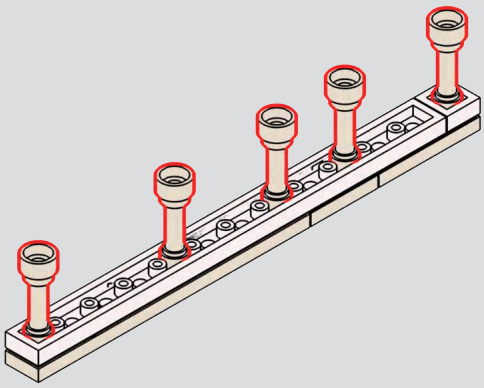

8 1:1

239

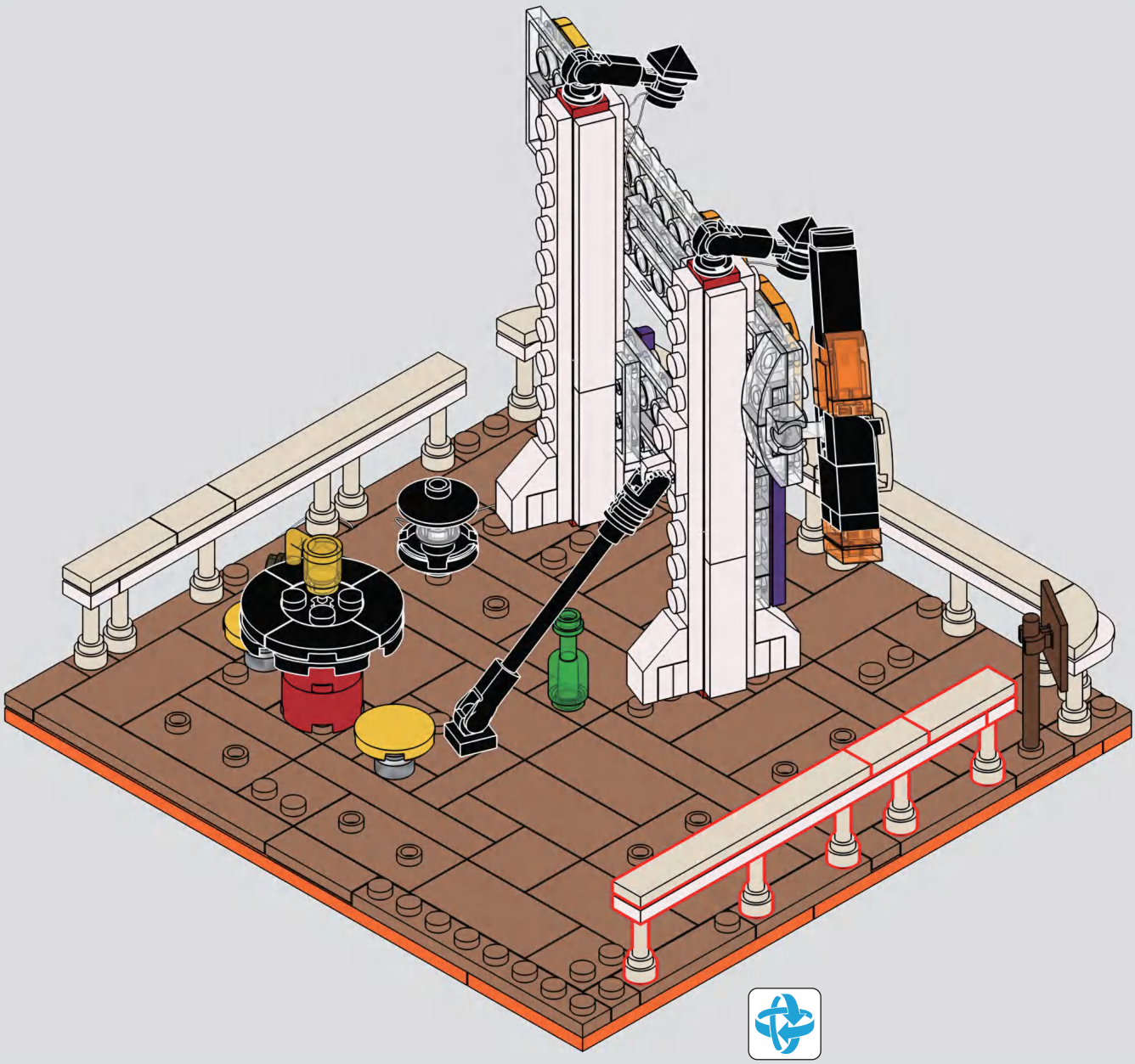

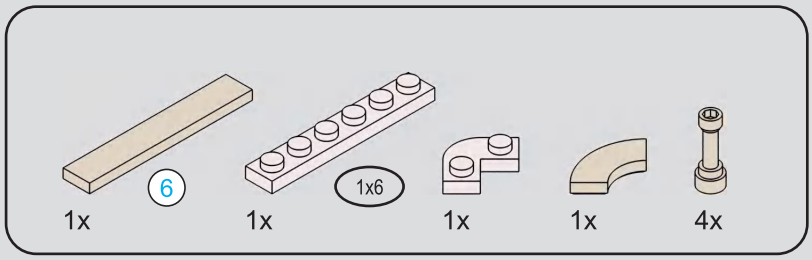


6 1:1

# 240

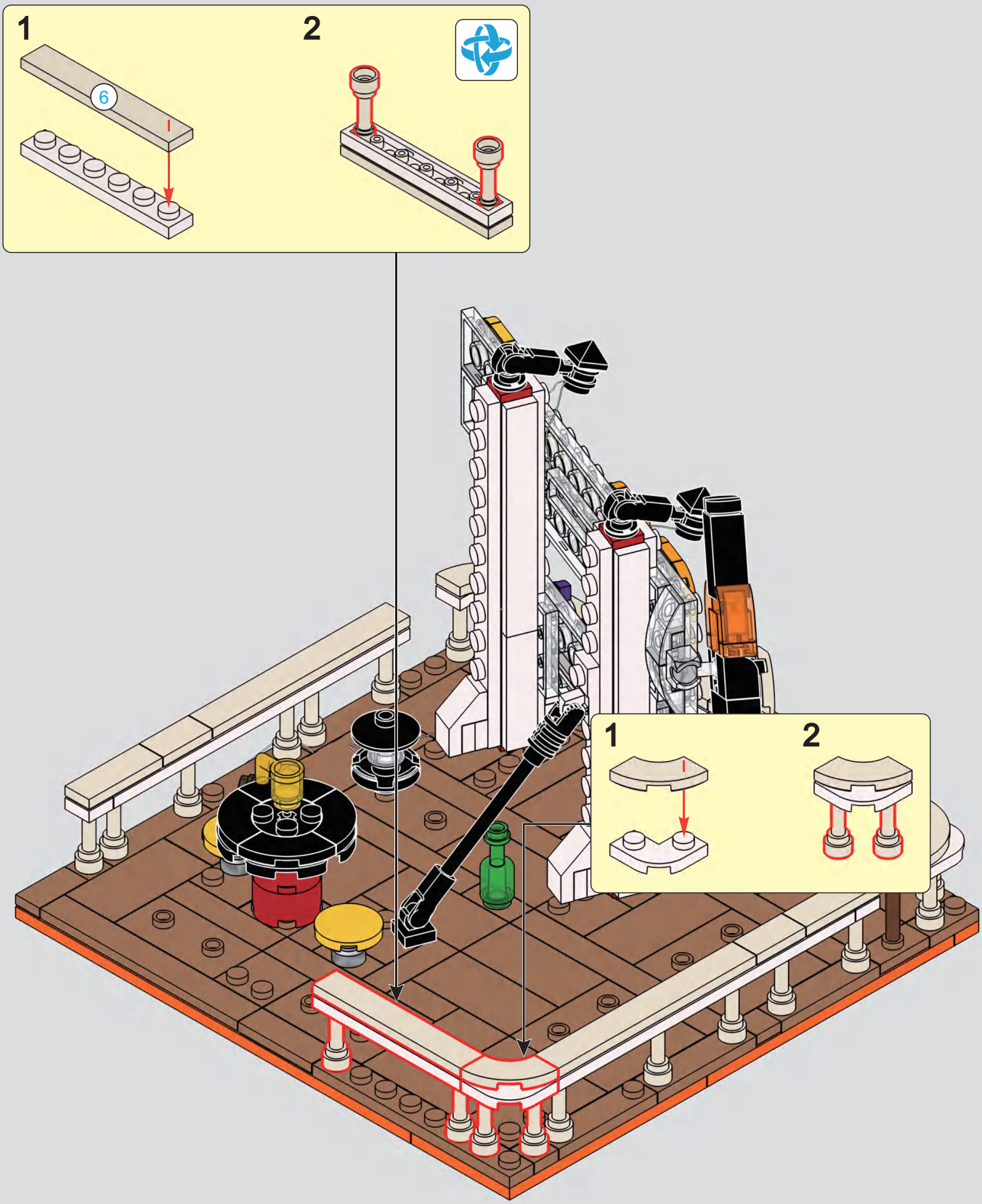

1

2

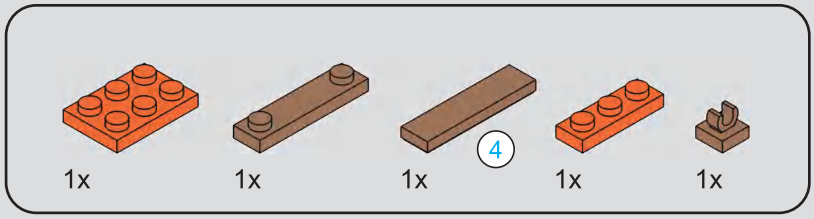

# 242

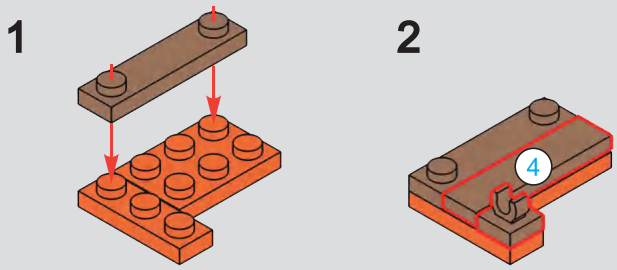


---

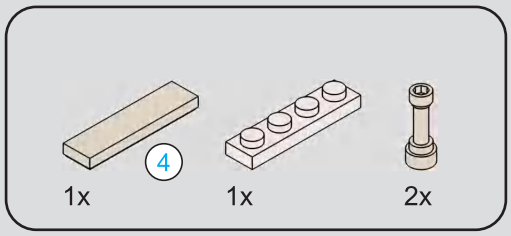


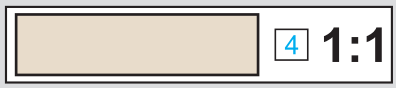


# 243

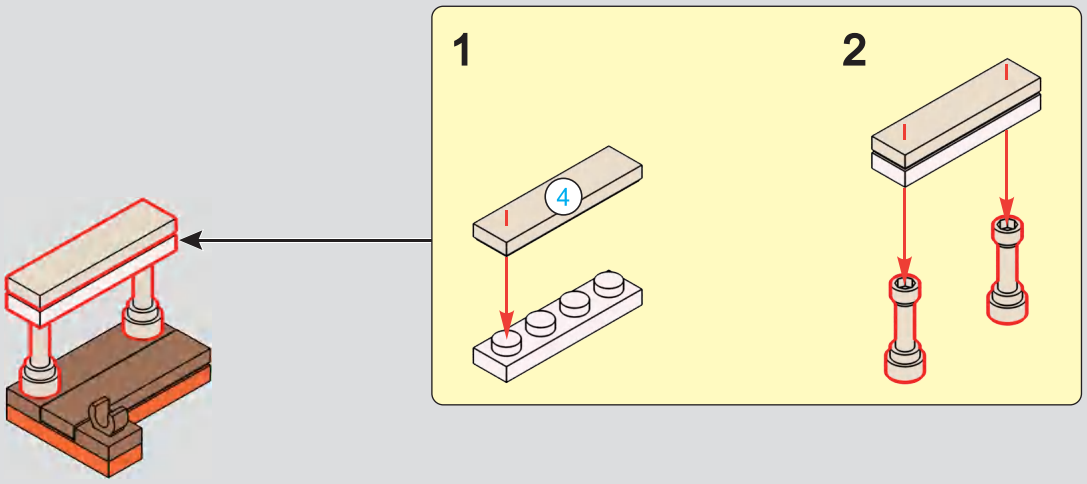

244

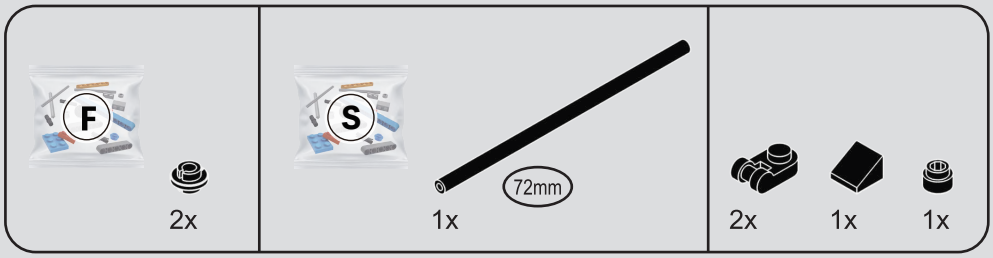


# 245

1

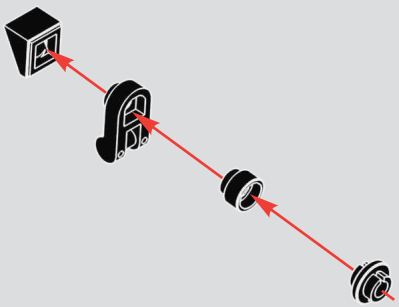

2

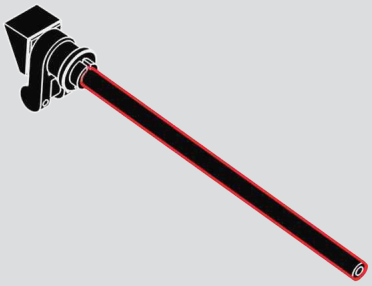

3

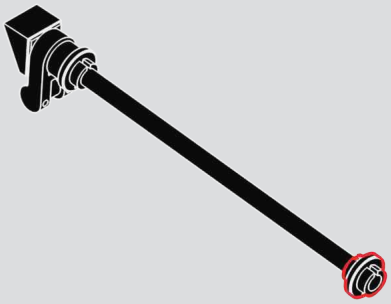

4

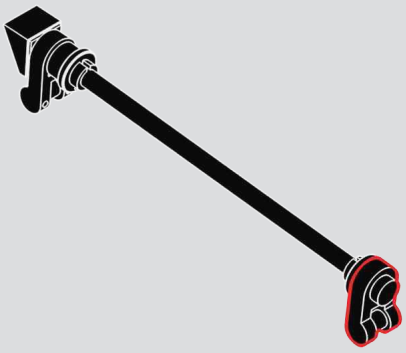



72mm 1:1

246

1

2
LOVE
DRINKS

13
F
LUMIBRICKS
DON'T
OVER
BAR
MOON
BAR
COCKTAIL SPECIAL
HAI HAITIAN SUNSET
$10.00
SAMOA FOG CUTTER
$4.50
PI NO COOLER
$5.00
STEVE CRAW & PEAR!
$6.50

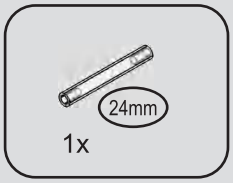


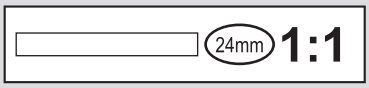


# 247

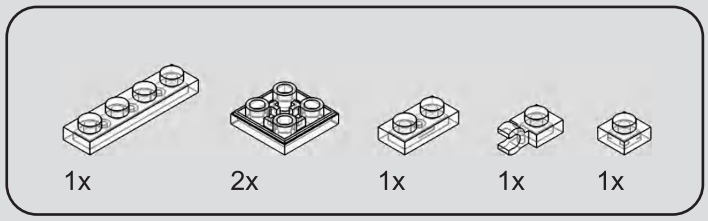


# 248

1

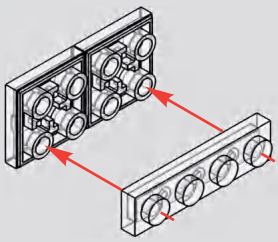

2

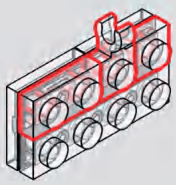

1x
1x
1x
1x
249
1
2
BAR
BAR
MOON BAR
DANGER

1x
1x
1x
1x
1x
250
MOON BAR
1
2

1x
1x
1x
3
1x
251
LOVE DRINKS
3
MOON BAR

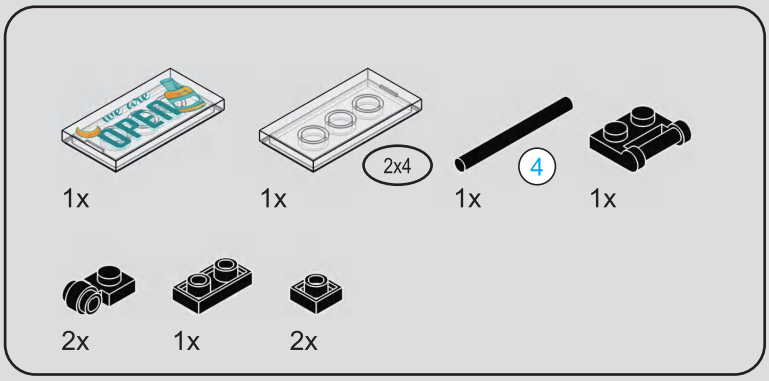


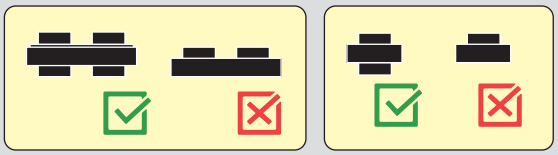

# 252

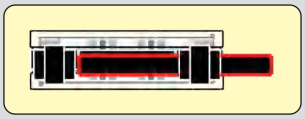

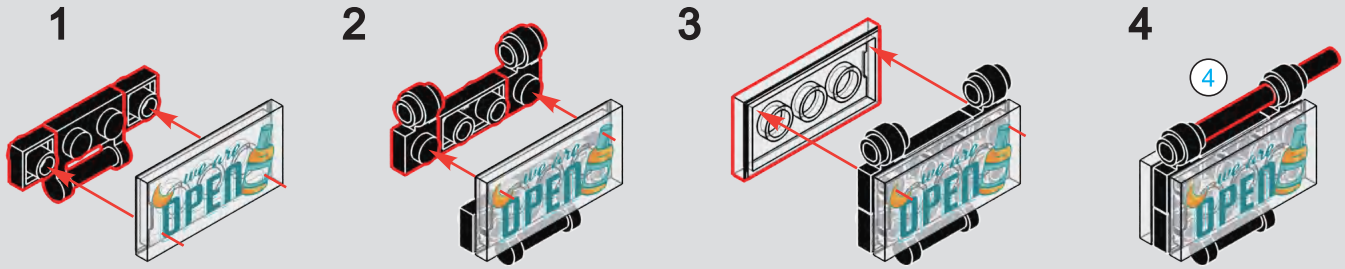


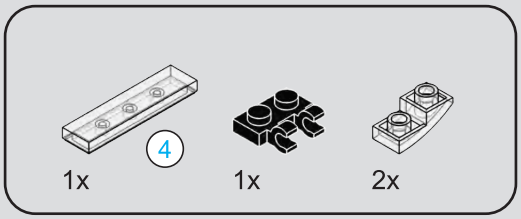

# 253

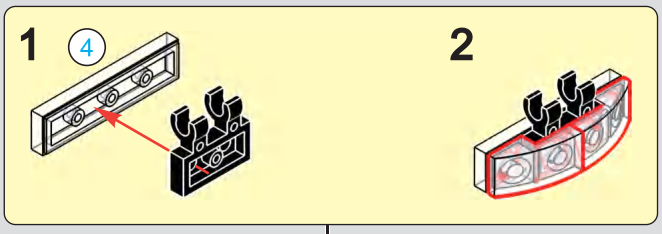


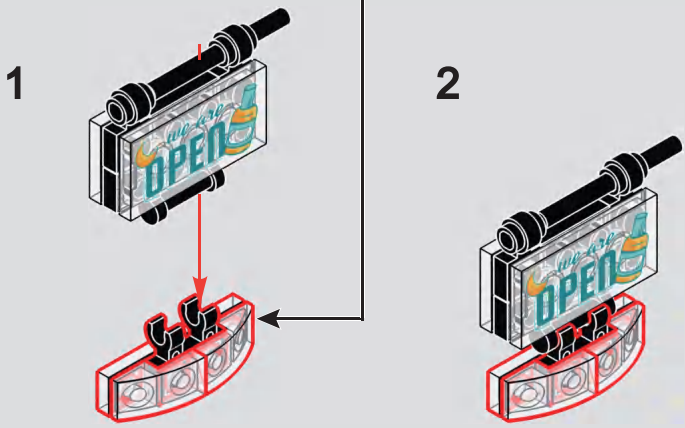

254

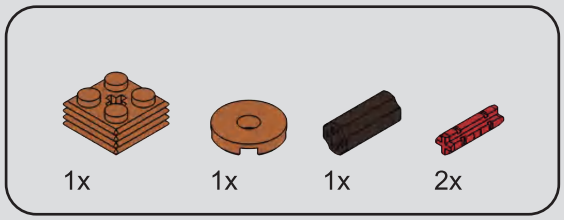


# 255

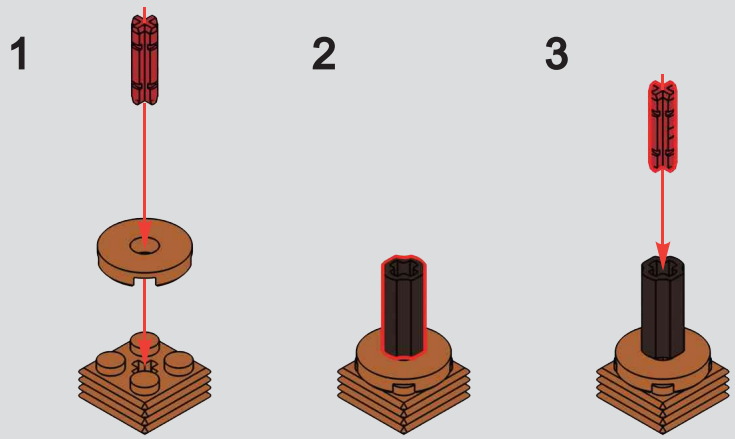


---

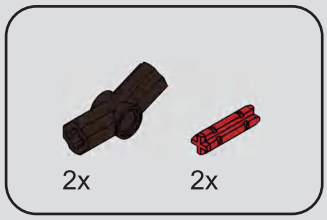


# 256

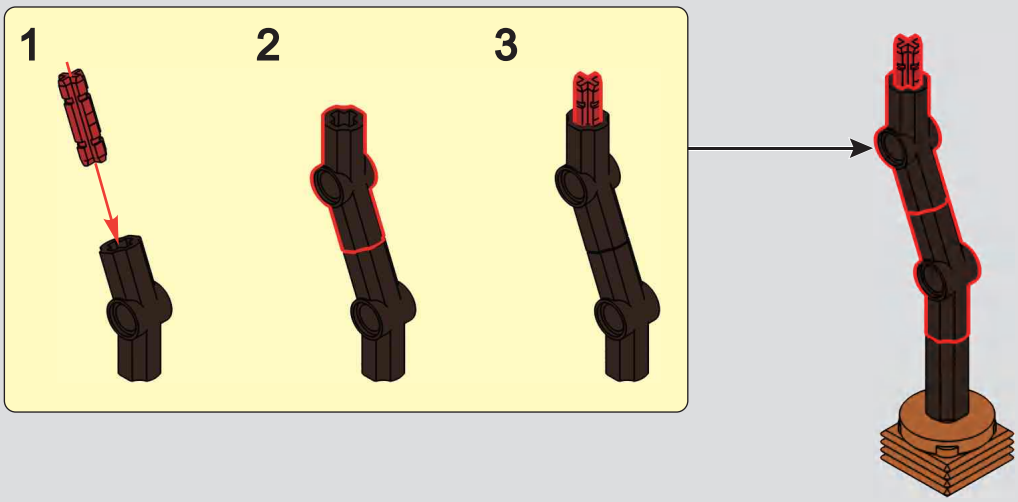

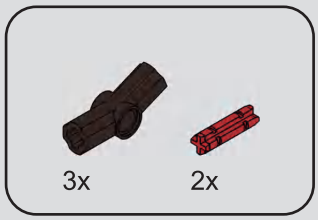


# 257

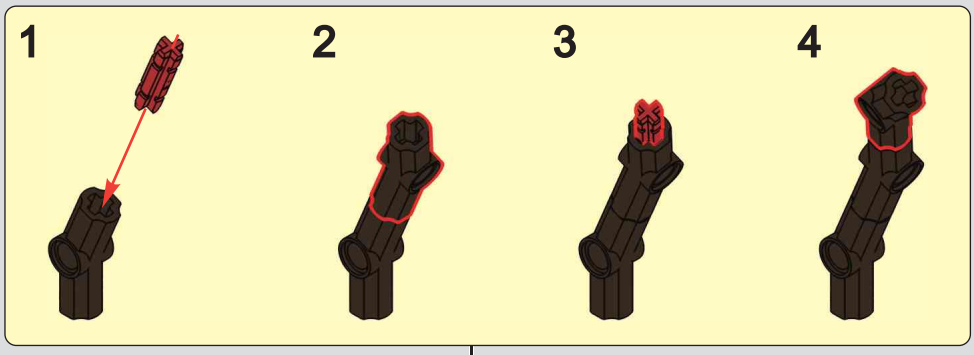

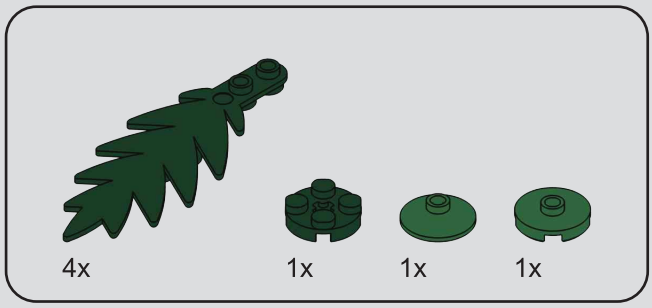


# 258

1

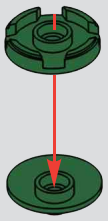

2

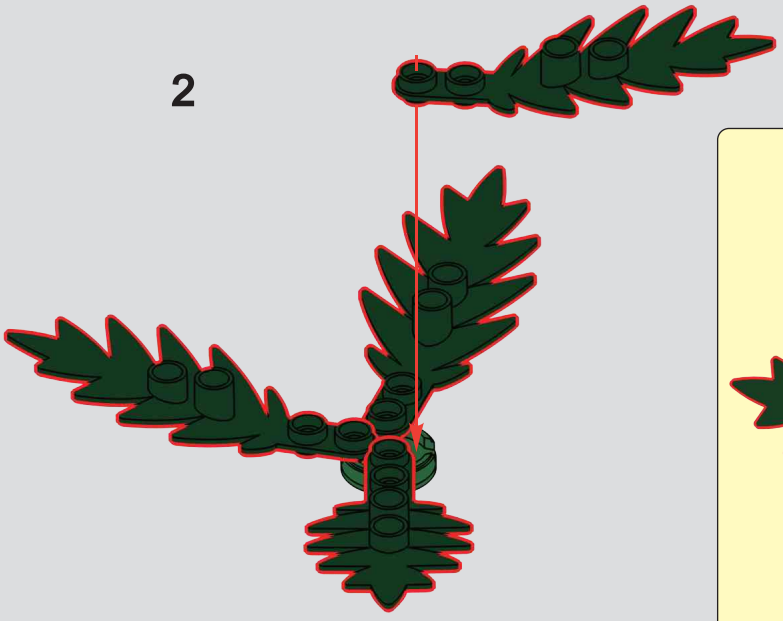

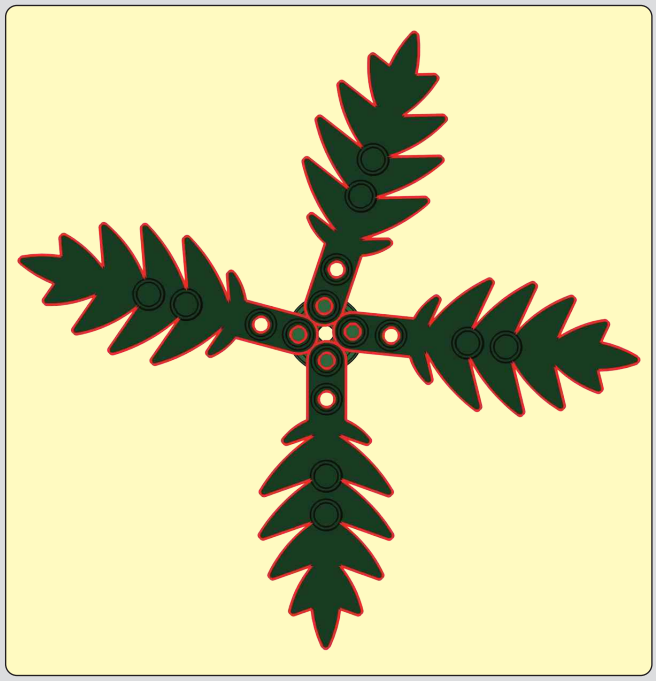

3

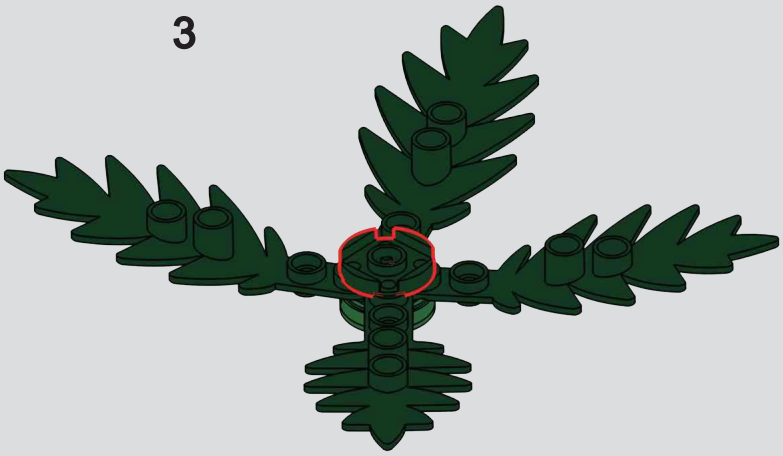

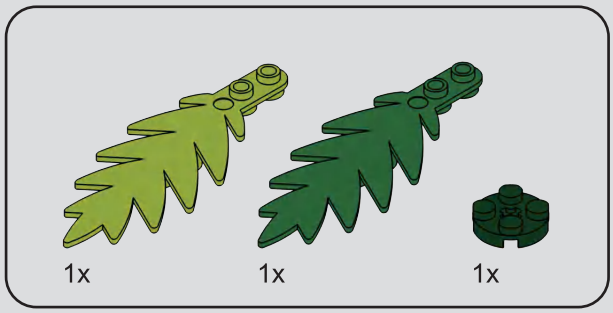


# 259

1

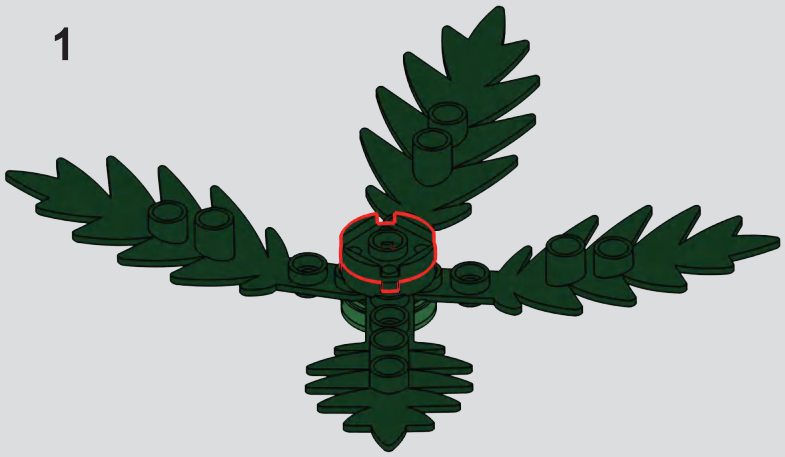

2

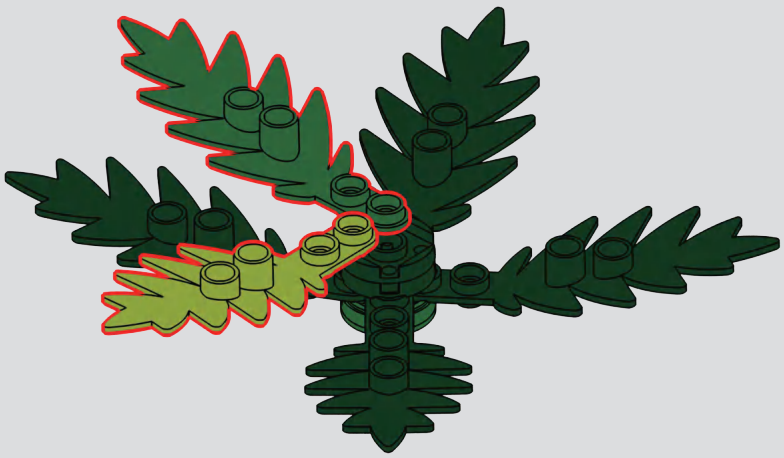

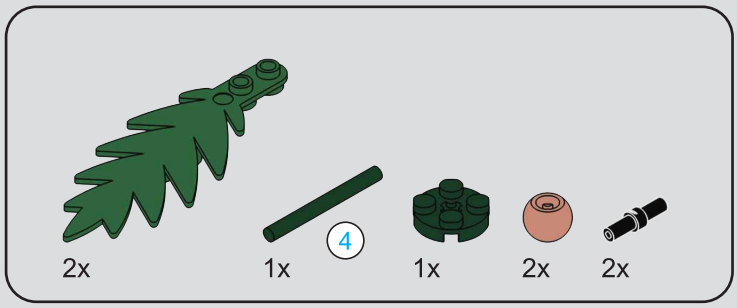

# 260

1

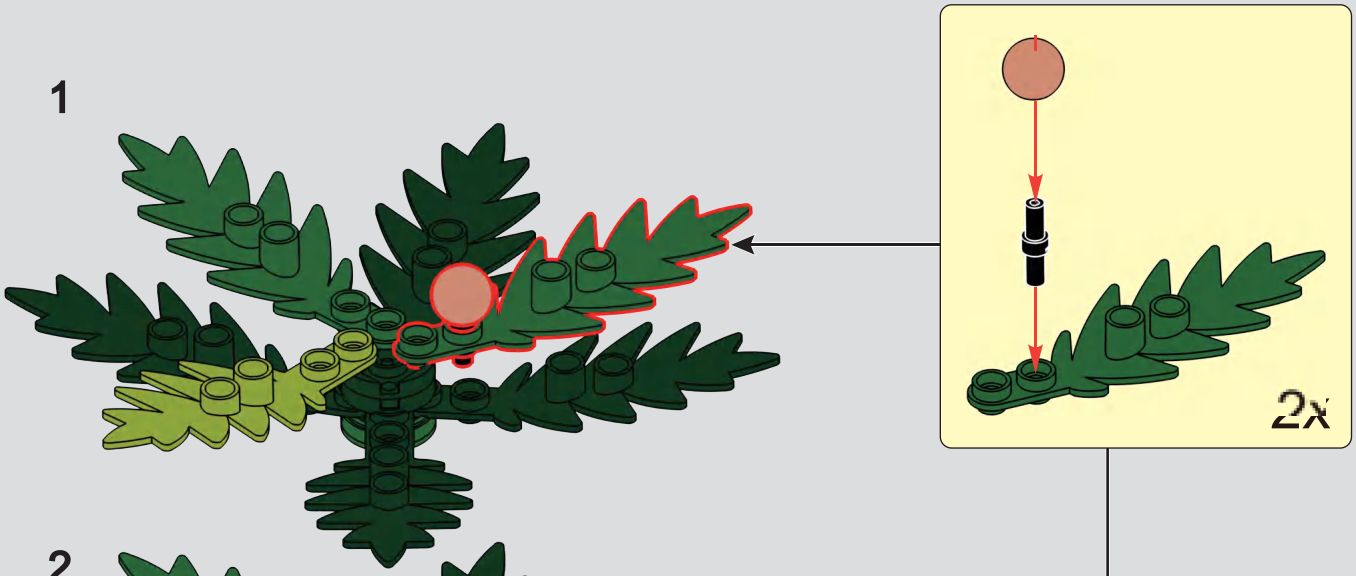


2

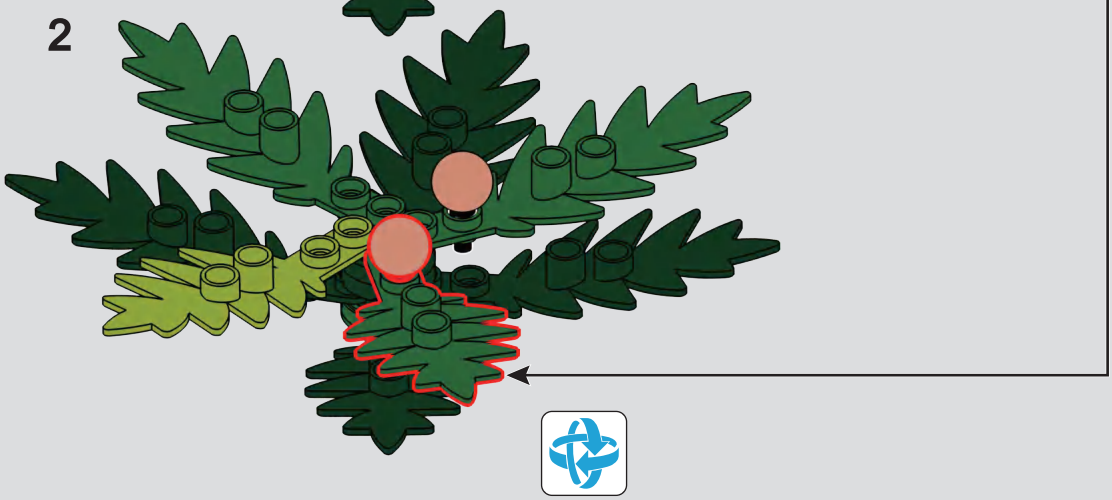

3

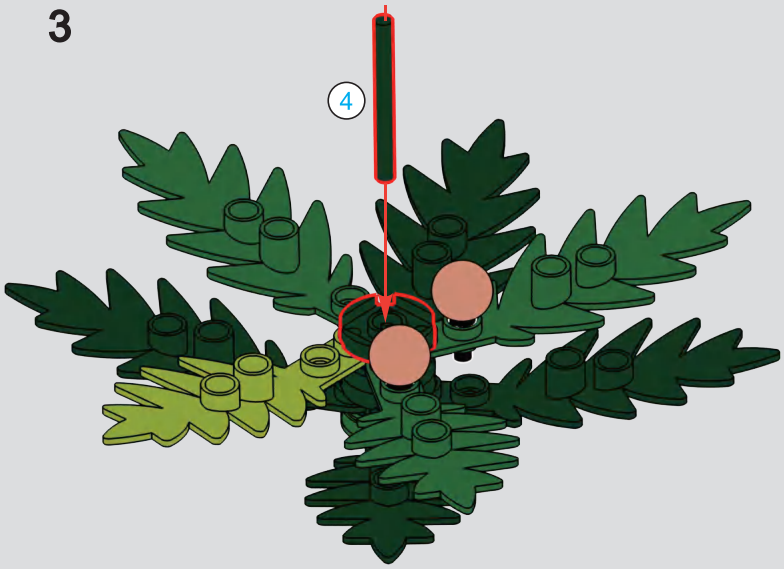

# 261

1

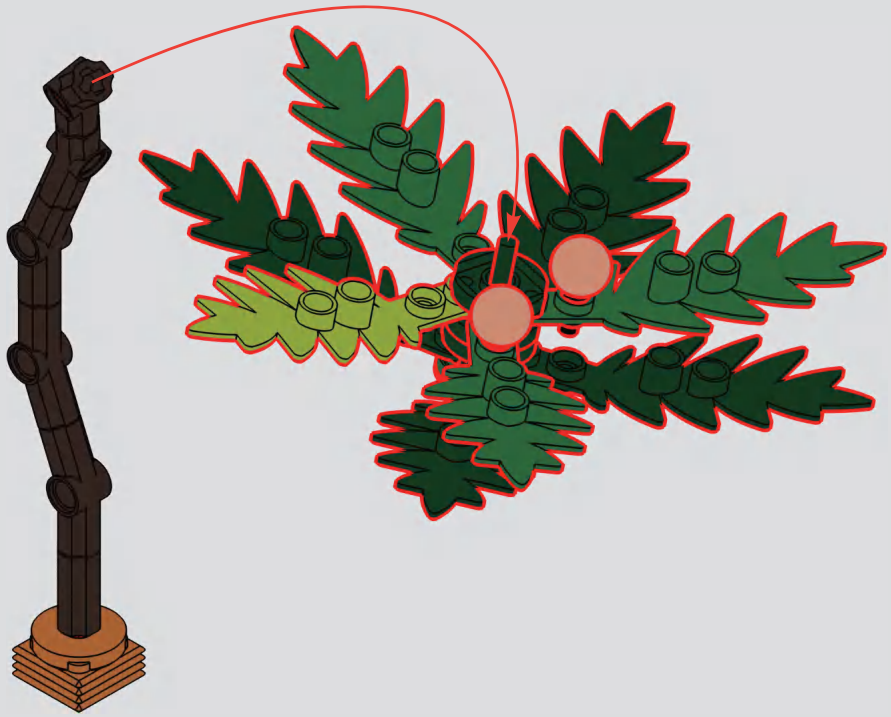

2

262

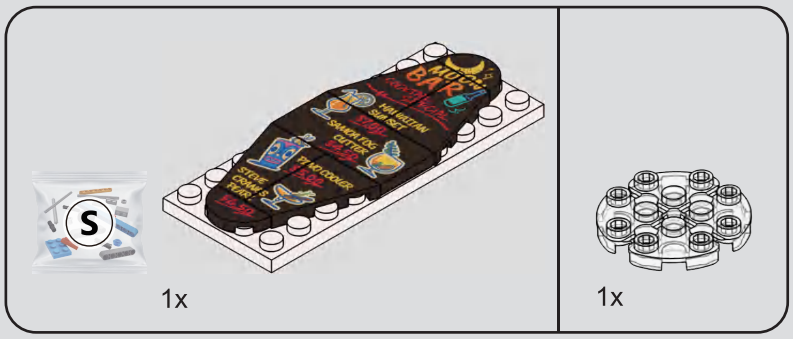


# 263

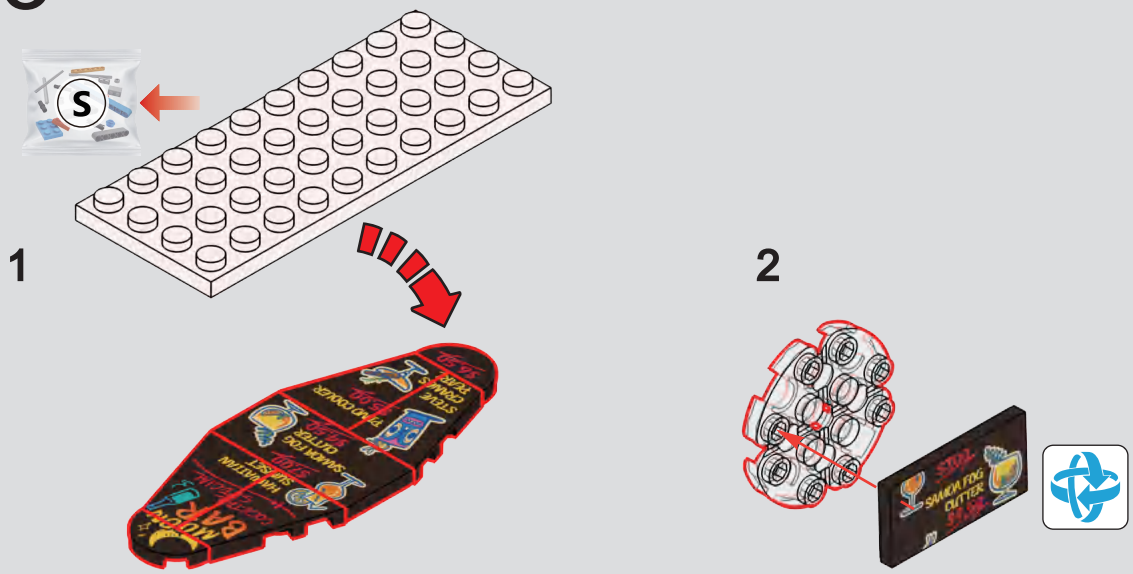


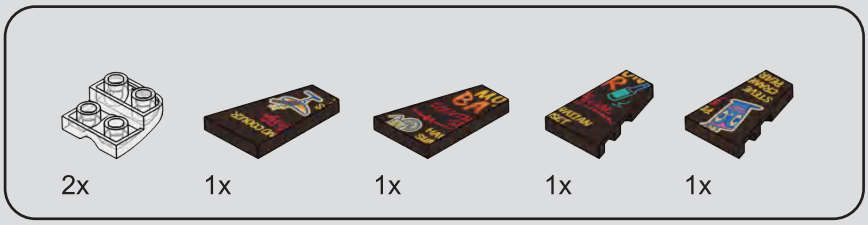


# 264

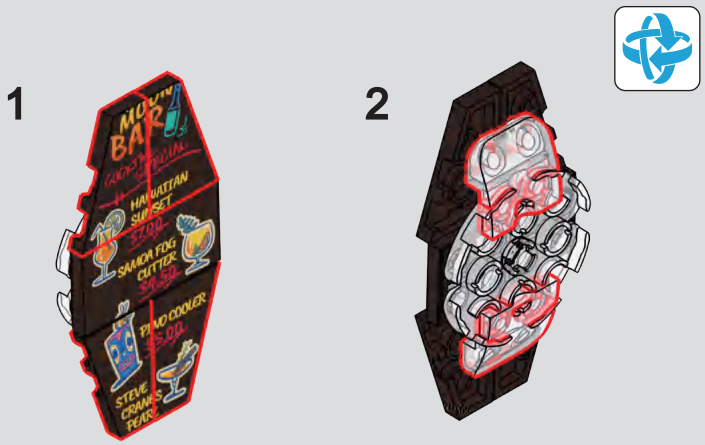

2x
1x
1x

# 265

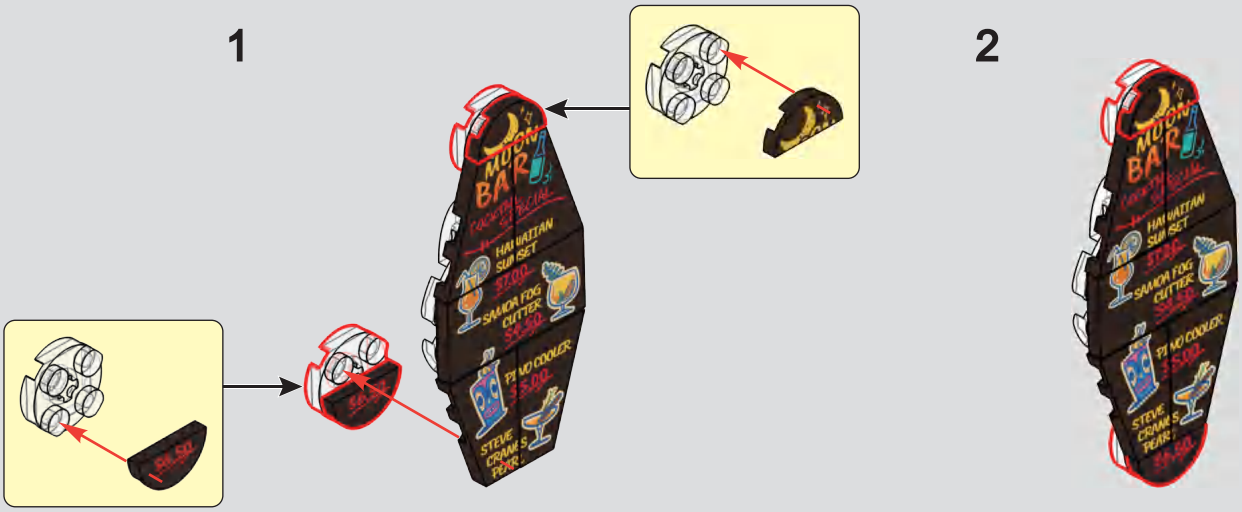
1
2
MOON BAR
HAI WAITAN SUN SET
SAMOA FOG CUTTER
FI MO COOLER
STEVE CRANK S PEAR!

---

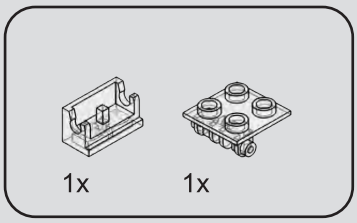
1x
1x

# 266

1
2
MOON BAR
HAI WAITAN SUN SET
SAMOA FOG CUTTER
FI MO COOLER
STEVE CRANK S PEAR!

267

1

2

MOON BAR
COCKTAIL SPECIAL
HAWAIIAN SUNSET
$7.00
SAMOA FOG CUTTER
$4.50
PINO COOLER
$5.00
STEVE CRANE'S PEARL
$6.50

1x
1x
1x
1x
1x
268
LUMIBRICKS
DON'T LEAN OVER
BAR
1
2
MOON BAR
COCKTAIL SPECIAL
HAWAIIAN SUNSET
$7.00
SAMOA FOG CUTTER
$4.50
PI NO COOLER
$5.00
STEVE CRANE'S PEAR!
$6.50

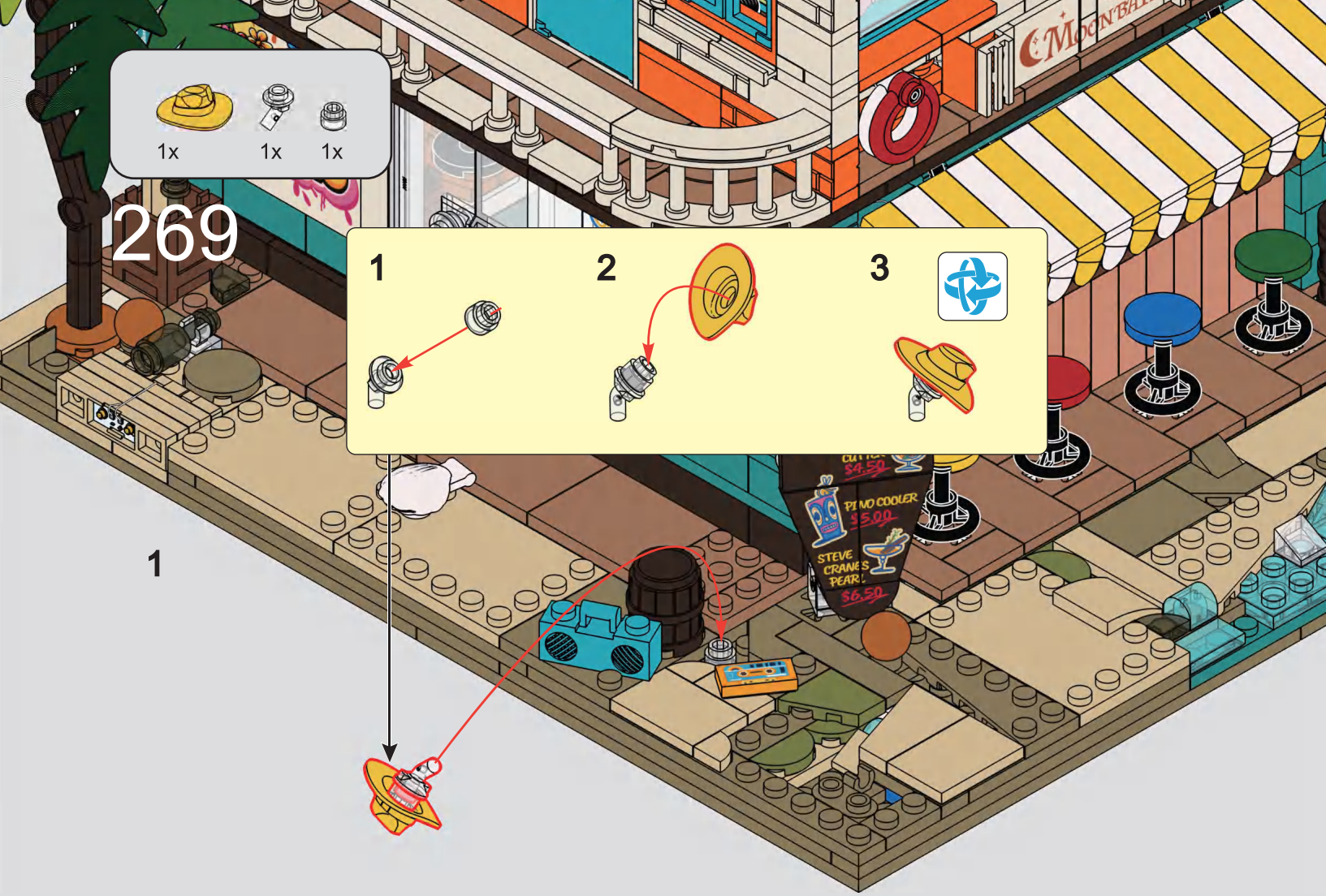
1x
1x
1x
269
1
2
3
1
PI NO COOLER
$5.00
STEVE CRANE'S PEAR!
$6.50

2

MOON BAR
COCKTAIL SPECIAL
HAWAIIAN SUNSET
$7.00
SAMOA FOG CUTTER
$4.50
PI NO COOLER
$5.00
STEVE CRANE'S PEAR!
$6.50

F
1x
1x
1x
1x
1x
270
LUMIBRICKS
DON'T LEAN OVER
BAR
MOON BAR
1
2
3
SAMOA FOG CUTTER
$4.50
PI NO COOLER
$5.00
STEVE CRANE'S PEAR!
$6.50

1x
1x
1x
1x
1x
271
LUMIBRICKS
DON'T LEAN OVER
1
2
3
COCKTAIL SPECIAL
HAWAIIAN SUNSET
$7.00
SAMOA FOG CUTTER
$4.50
PINO COOLER
$5.00
STEVE CRANE'S PEAR!
$6.50

1x
1x
1x
272
LUMIBRICKS
DON'T LEAN OVER
MOON BAR
COCKTAIL SPECIAL
HAWAIIAN SUNSET
$7.00
SAMOA FOG CUTTER
$4.50
PINO COOLER
$5.00
STEVE CRANE'S PEARL
$6.50

1x
1x
273

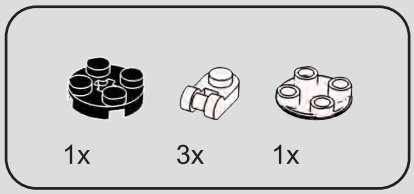


# 274

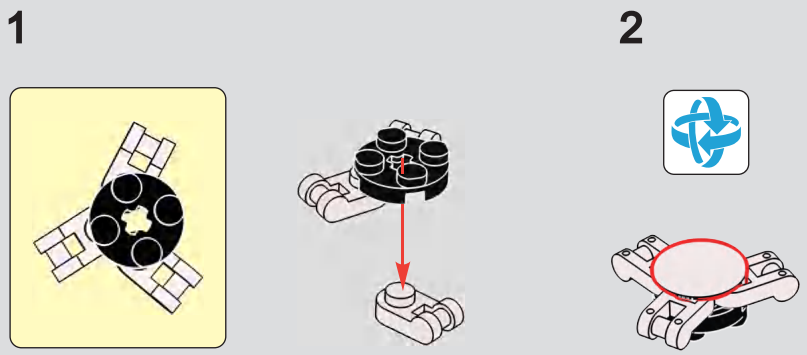


---

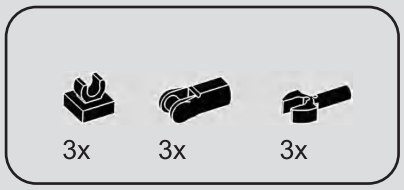


# 275

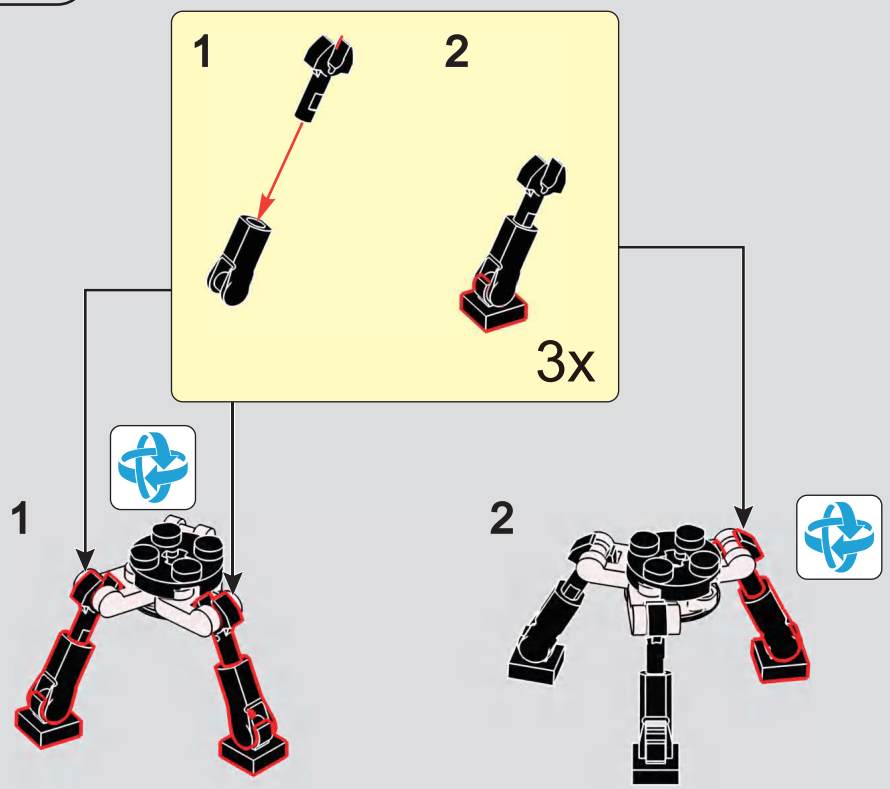

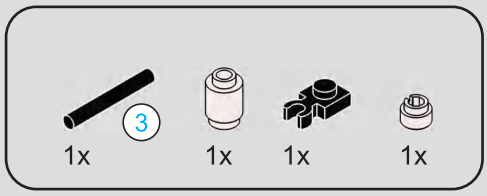

# 276

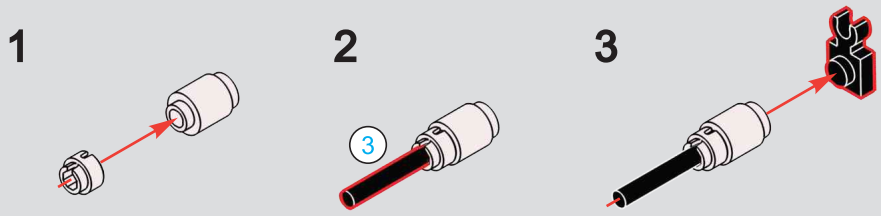


---

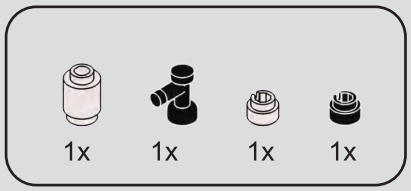


# 277

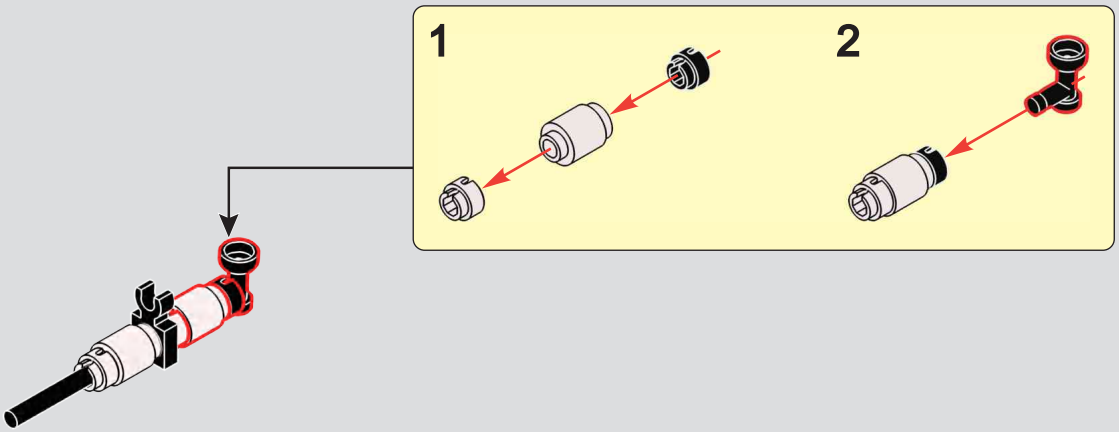

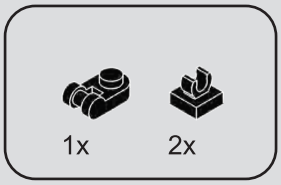


# 278

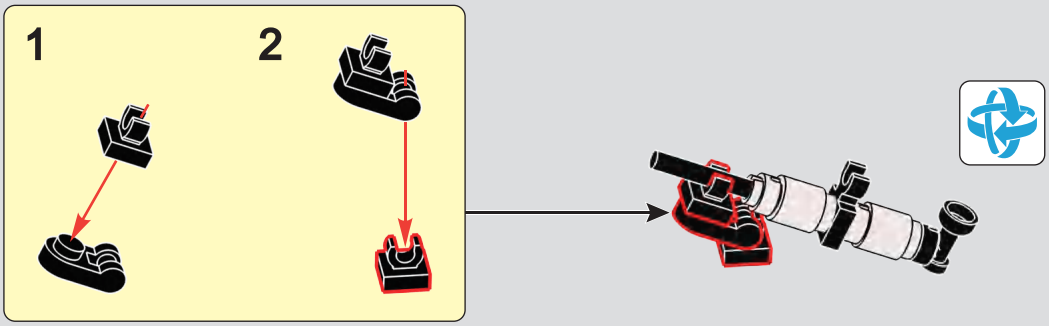


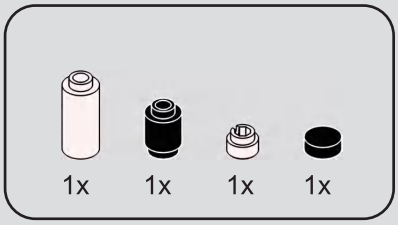


# 279

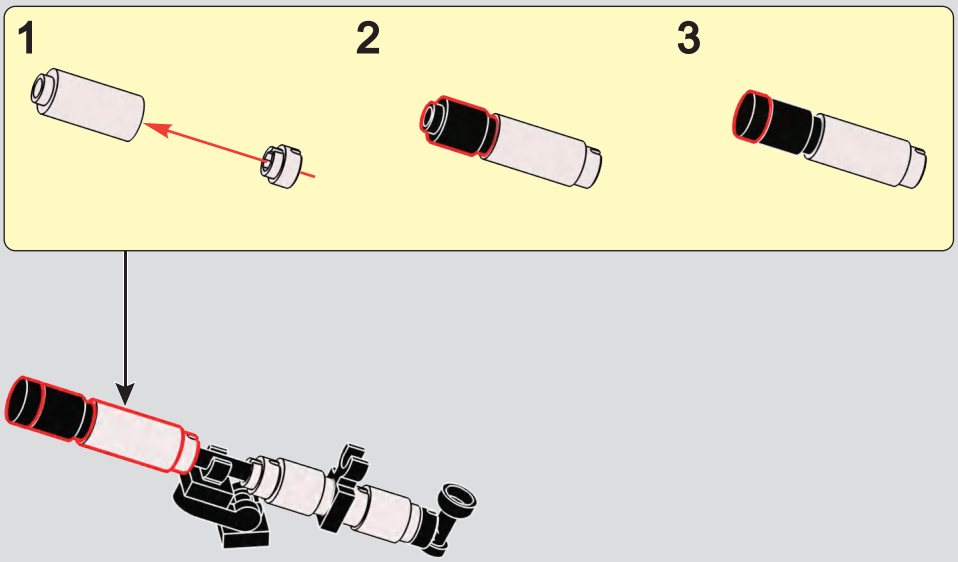

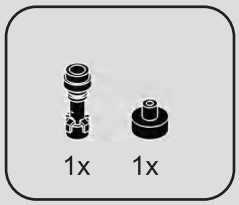


281

280

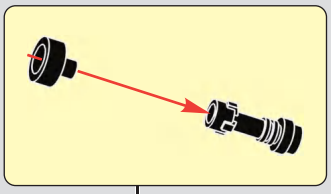

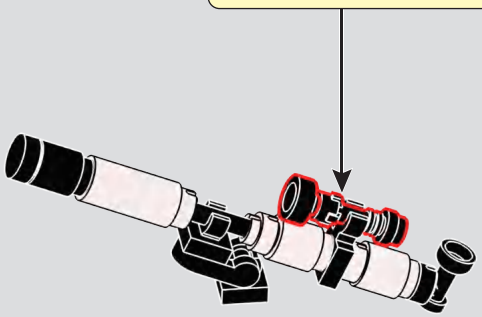

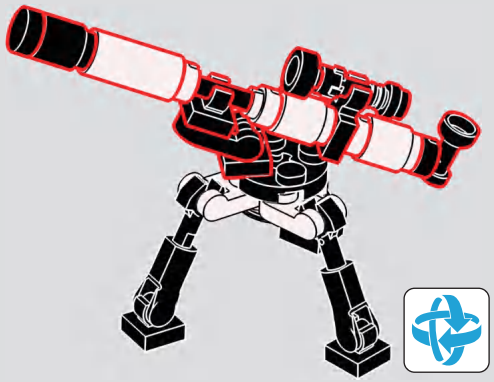

282

1

2

LUMIBRICKS
DON'T LEAN OVER
BAR
MOON BAR
COCKTAIL SPECIAL
HAWAIIAN SUNSET $7.00
SAMOA FOG CUTTER $4.50
PIMO COOLER $5.00
STEVE CRANE'S PEARL $6.50

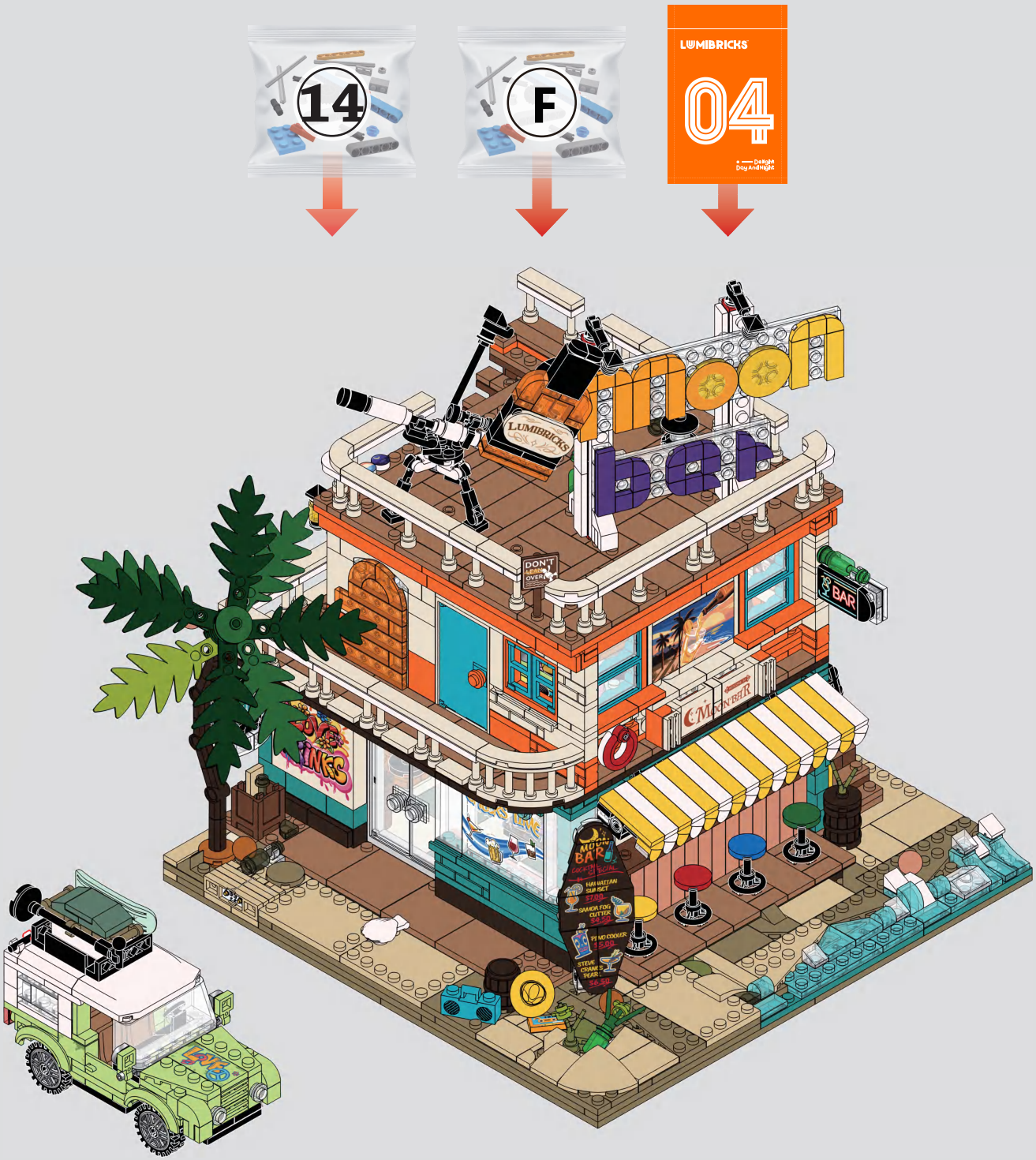
14
F
LUMIBRICKS
04
Day And Night
LUMIBRICKS
DON'T LEAVE OVER
BAR
MOON BAR
COCKTAIL SPECIAL
HAI WAIIAN SUR SET
$7.00
SAMOA FOG CUTTER
$8.50
PINA COOLER
$15.00
STEVE CRAM'S TKAR
$6.50

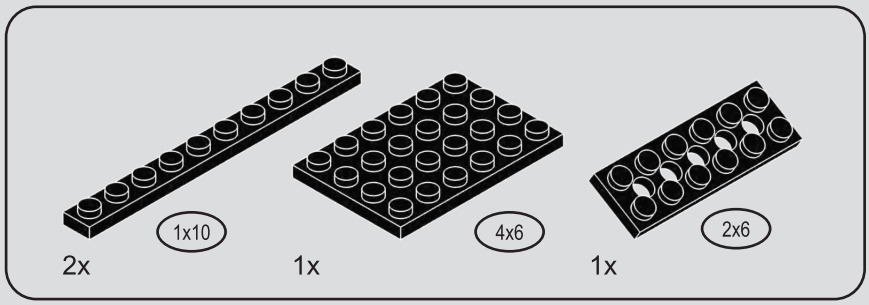


# 283

**1**

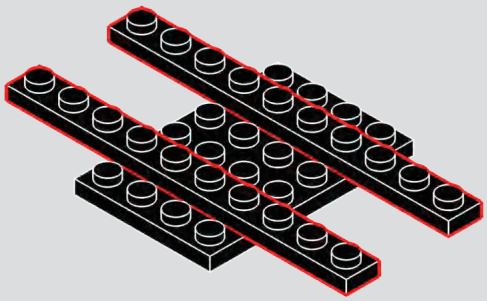

**2**

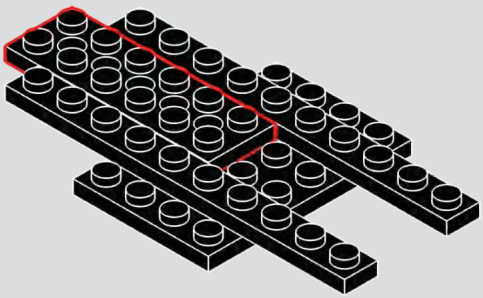

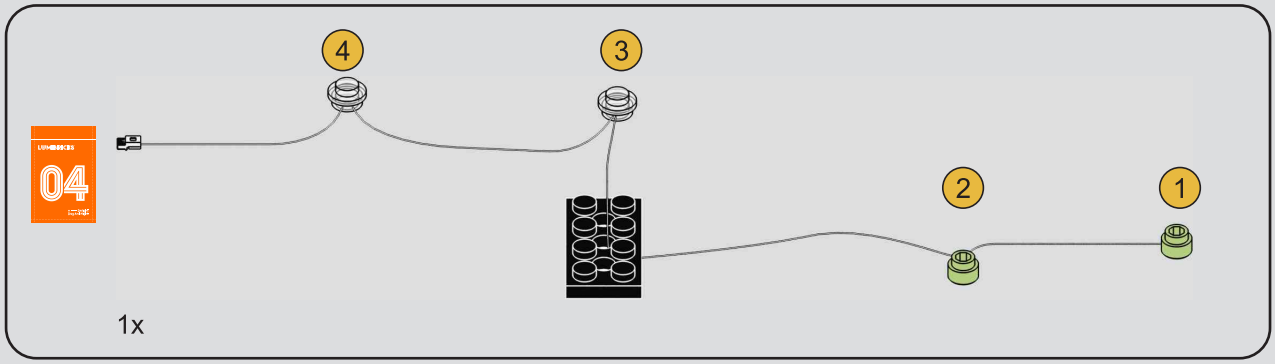


# 284

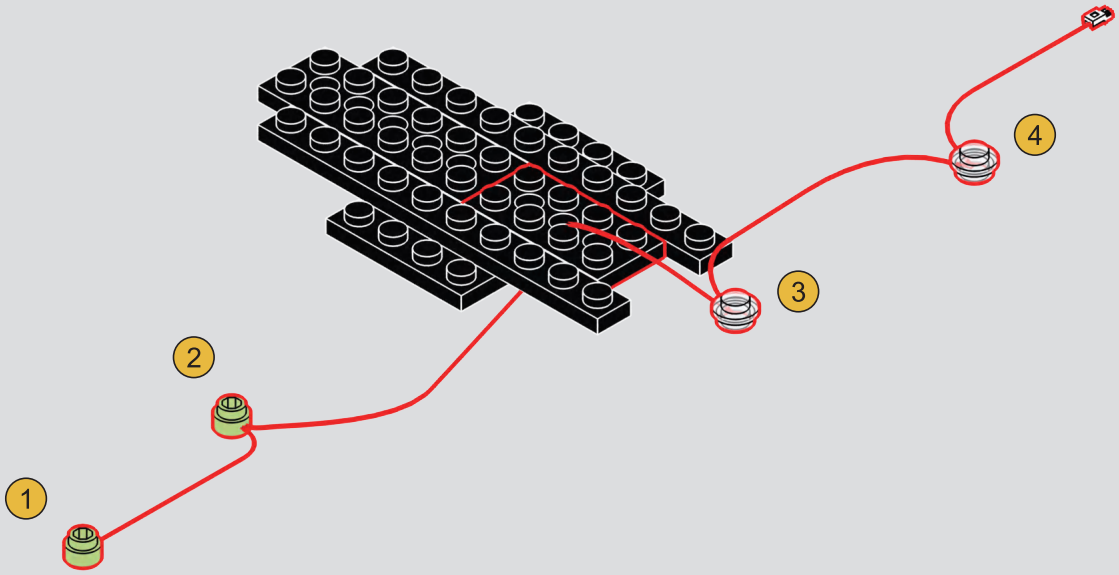


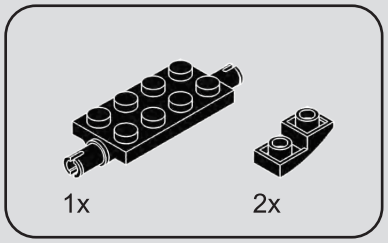


# 285

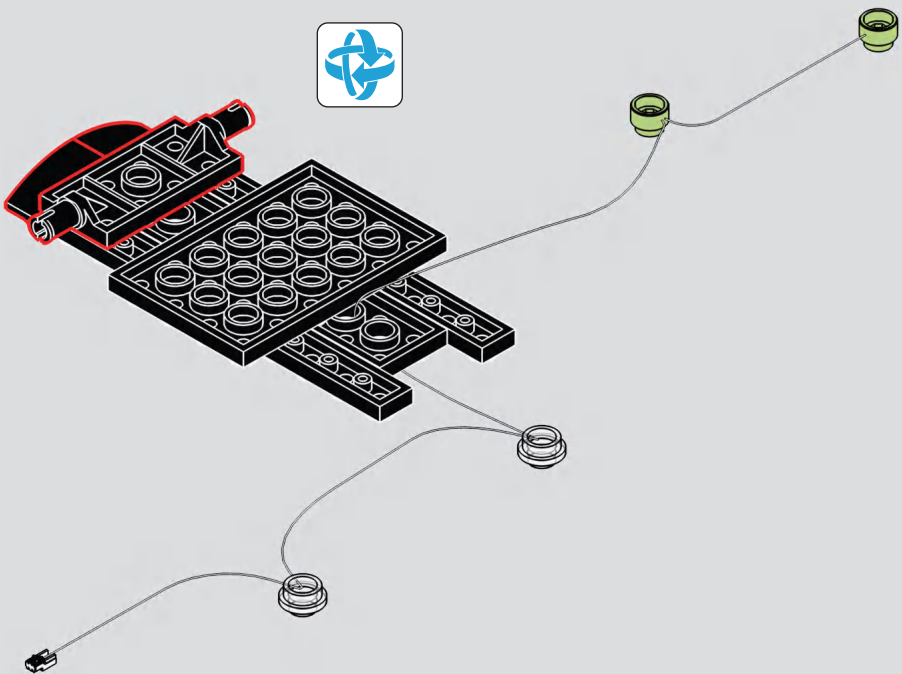

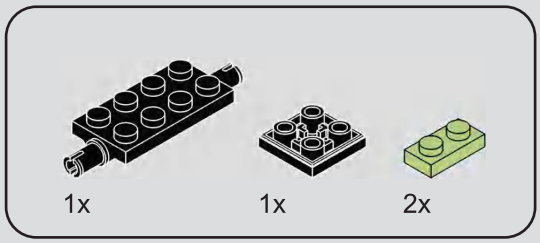


# 286

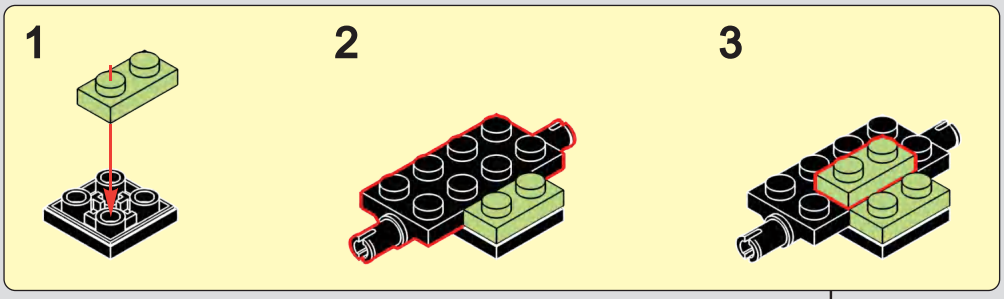


1

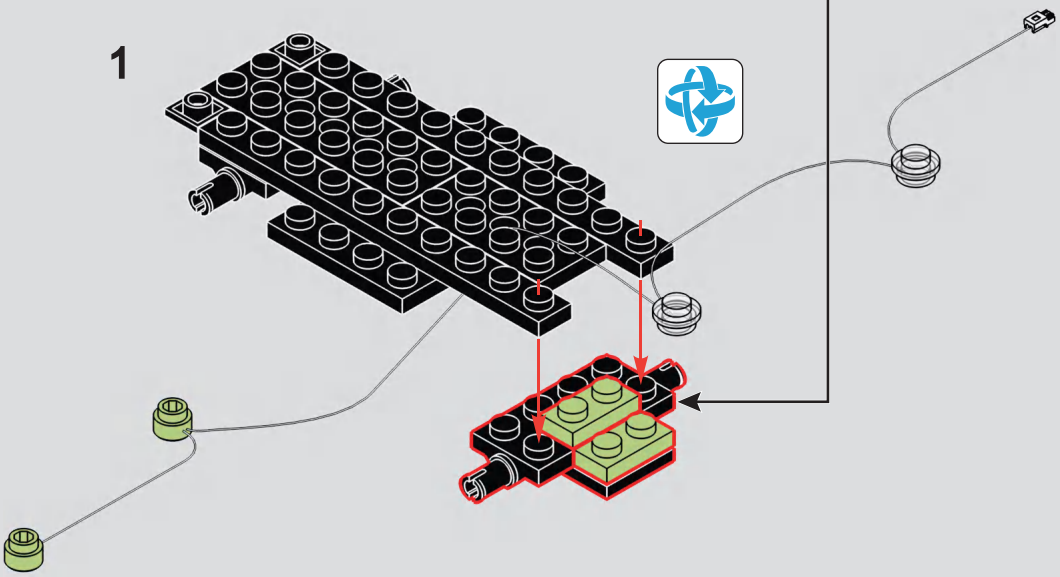

2

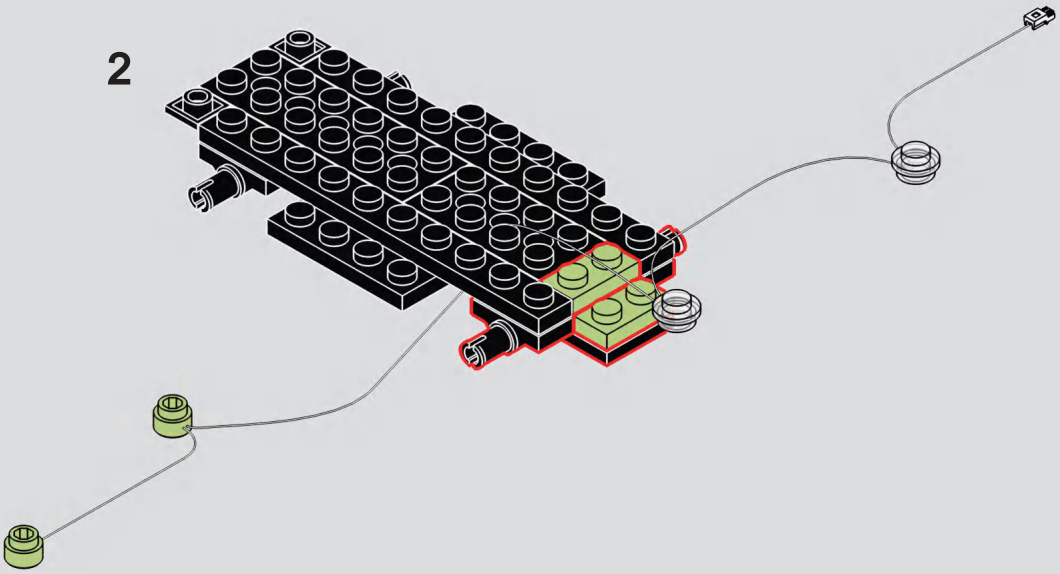

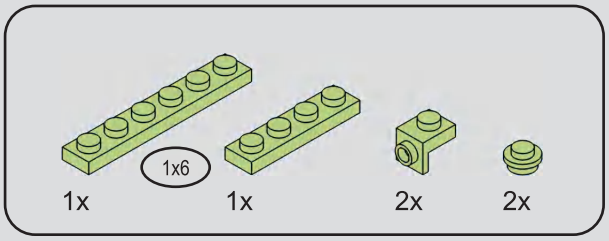


# 287

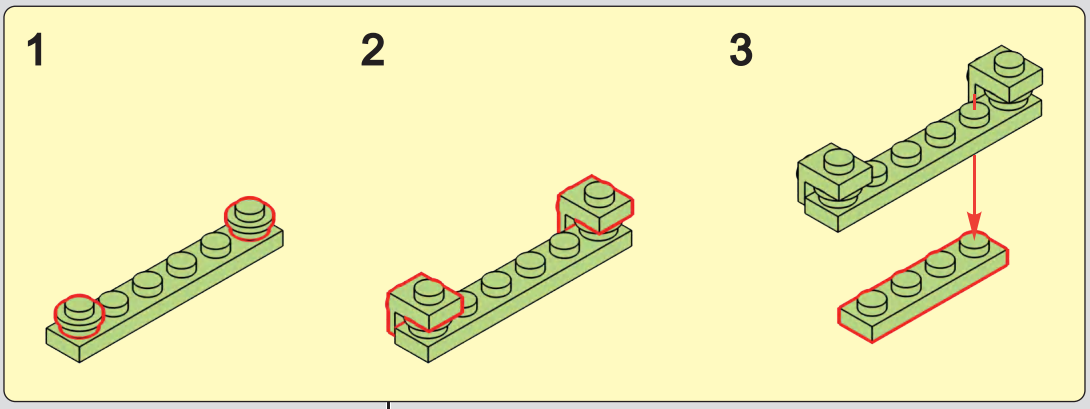


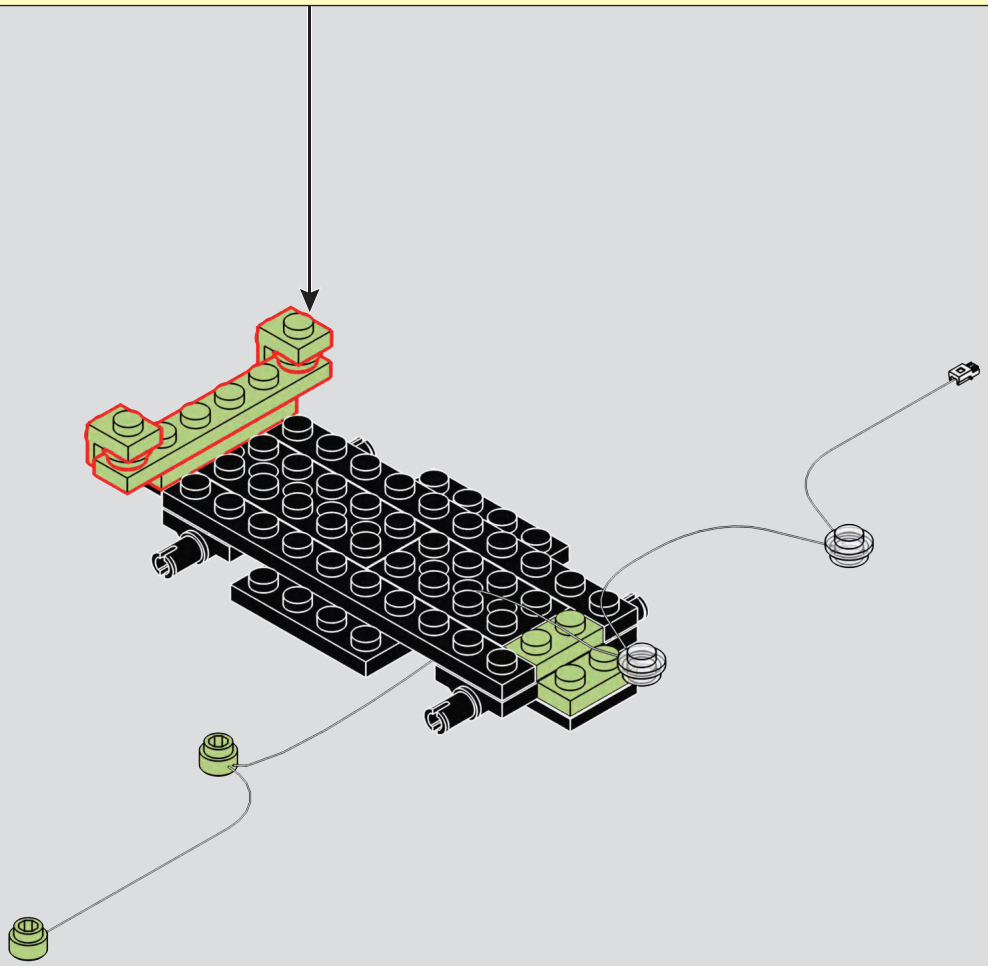

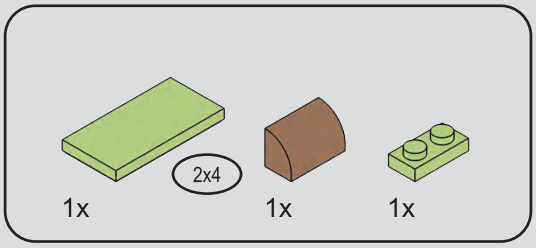


# 288

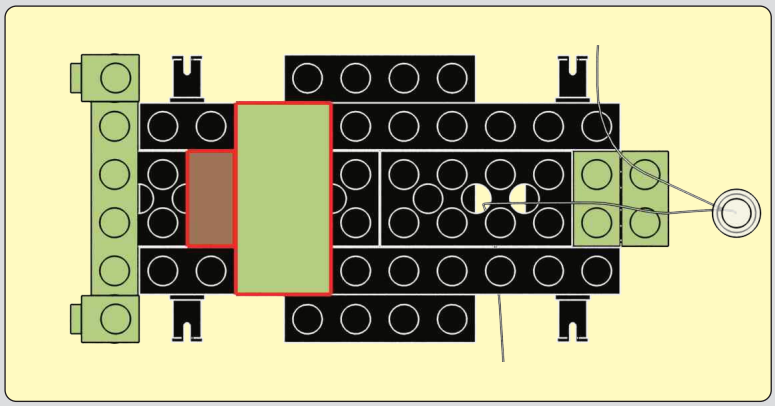

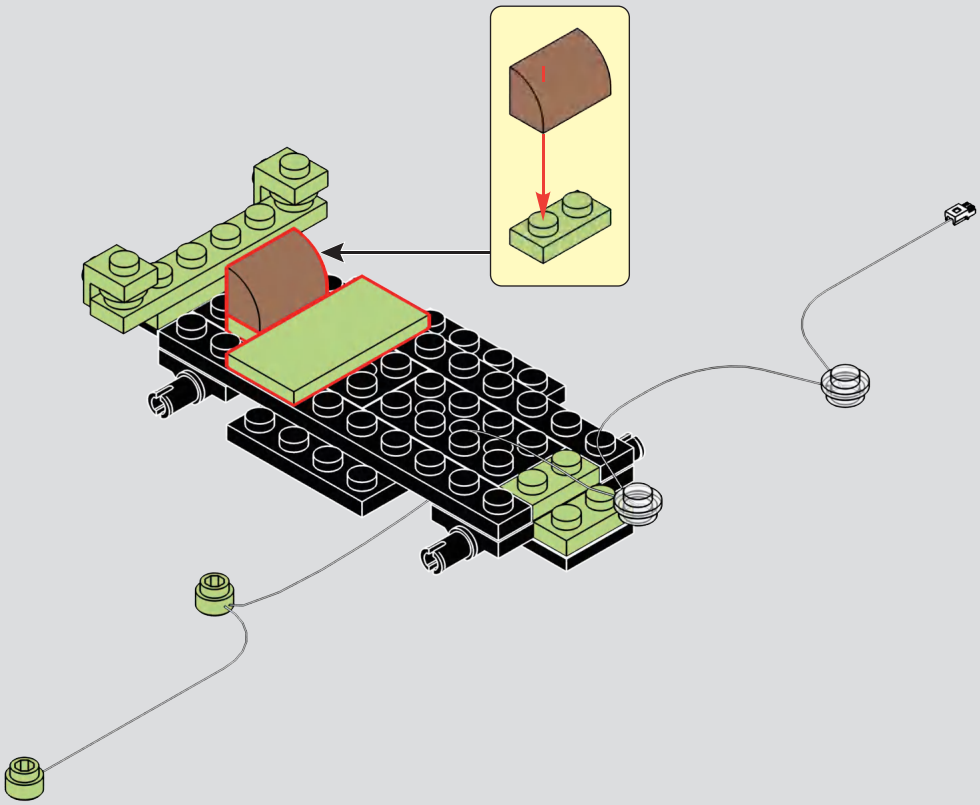

# 289

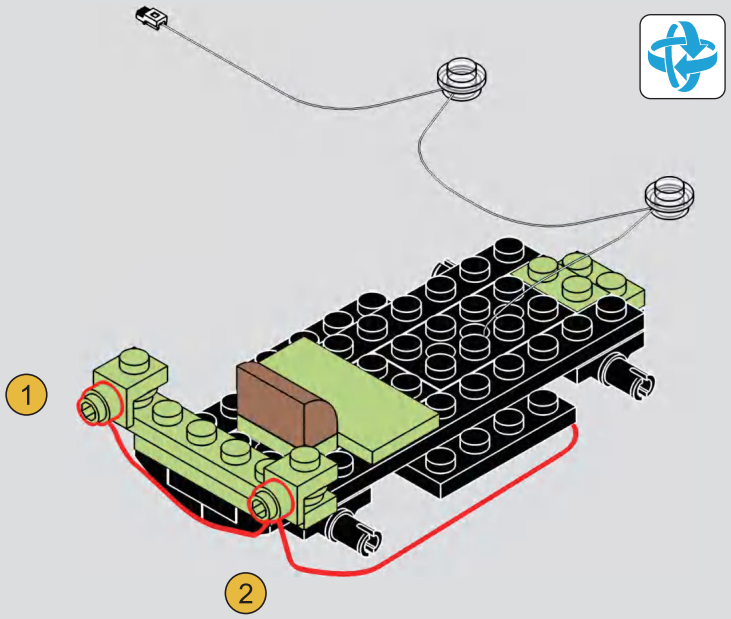


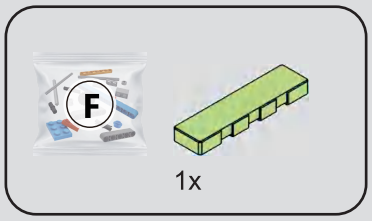


# 290

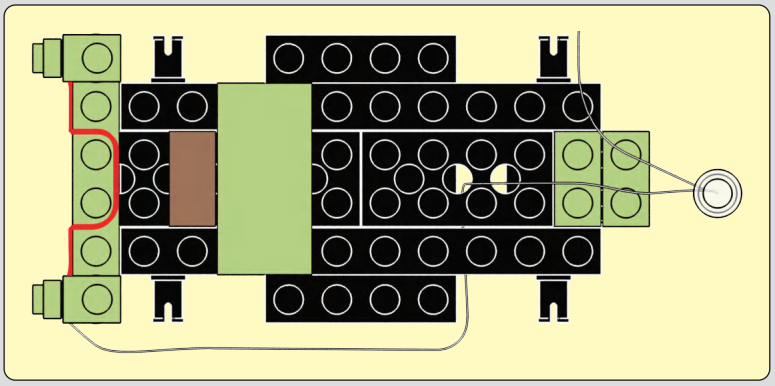

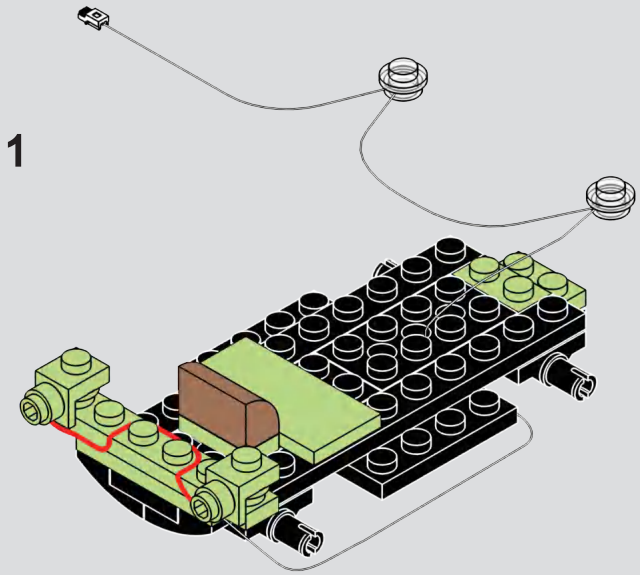

2

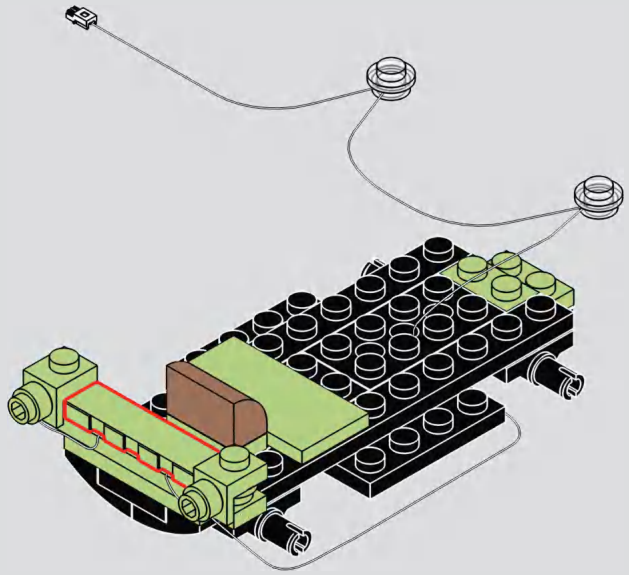

2x

291

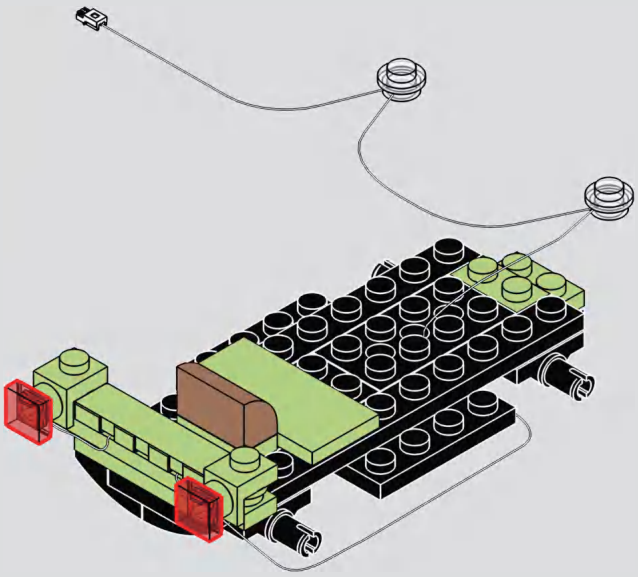

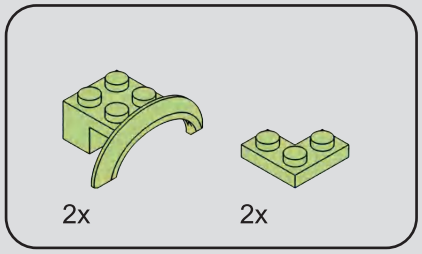


# 292

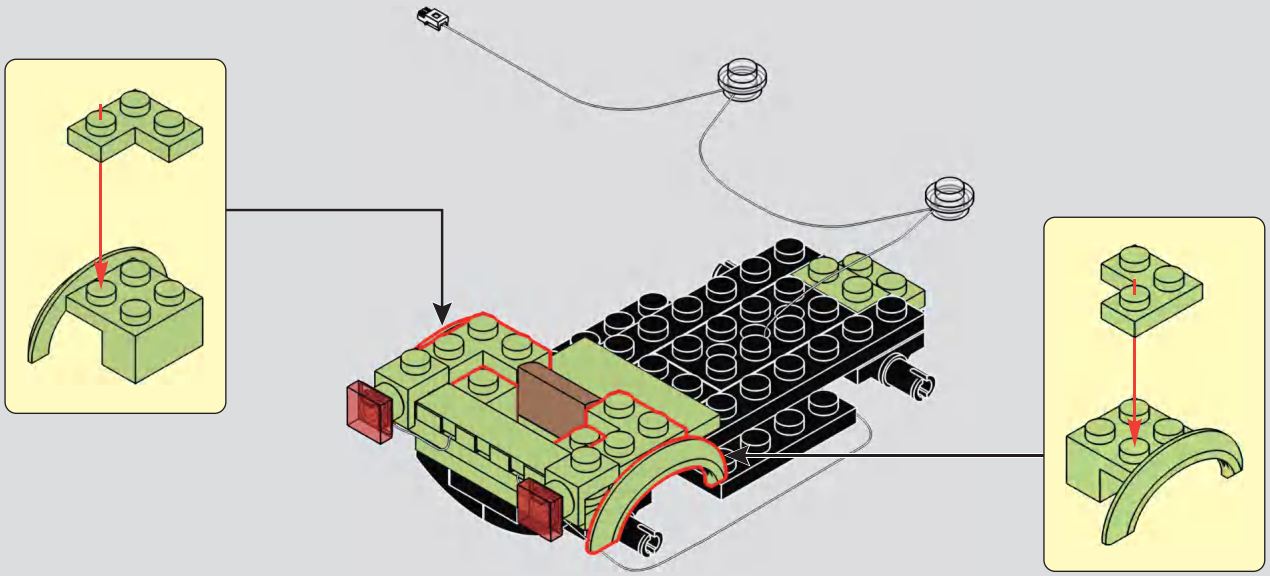

---

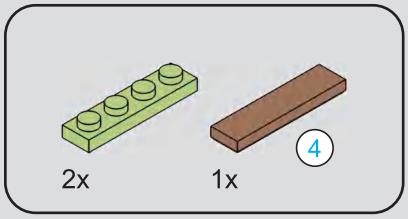

# 293

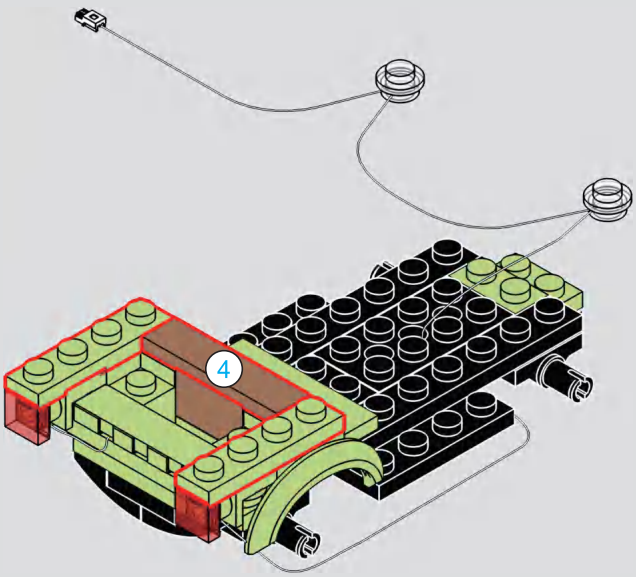

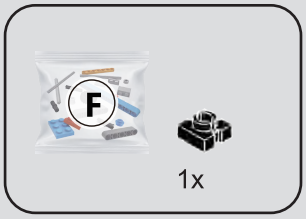


# 294

1

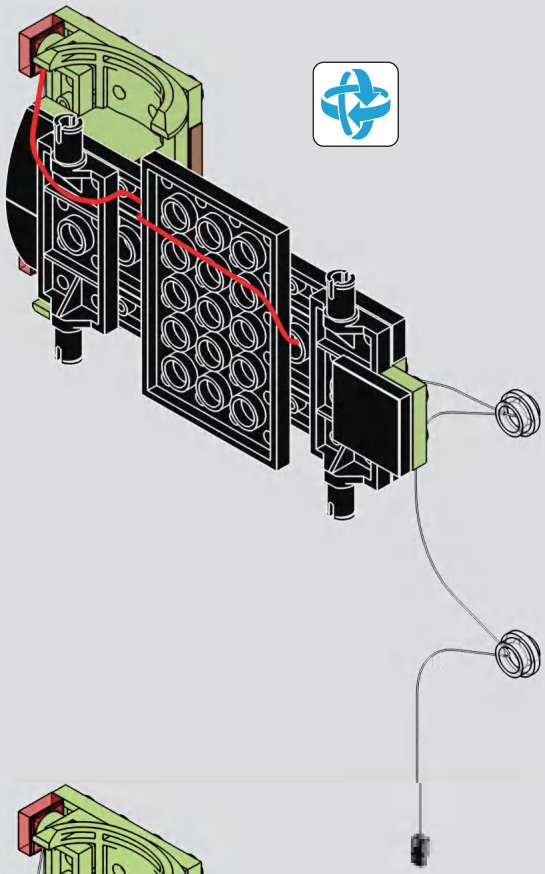

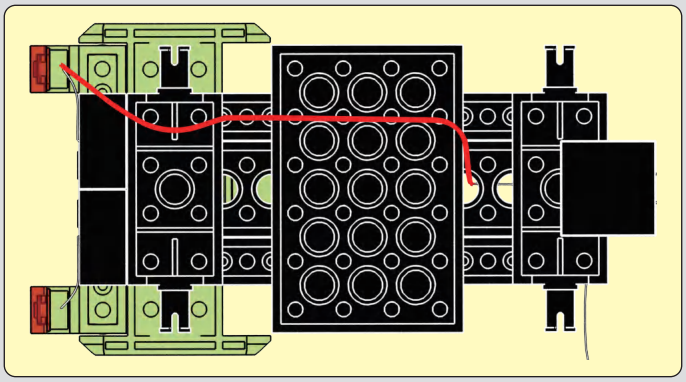

2

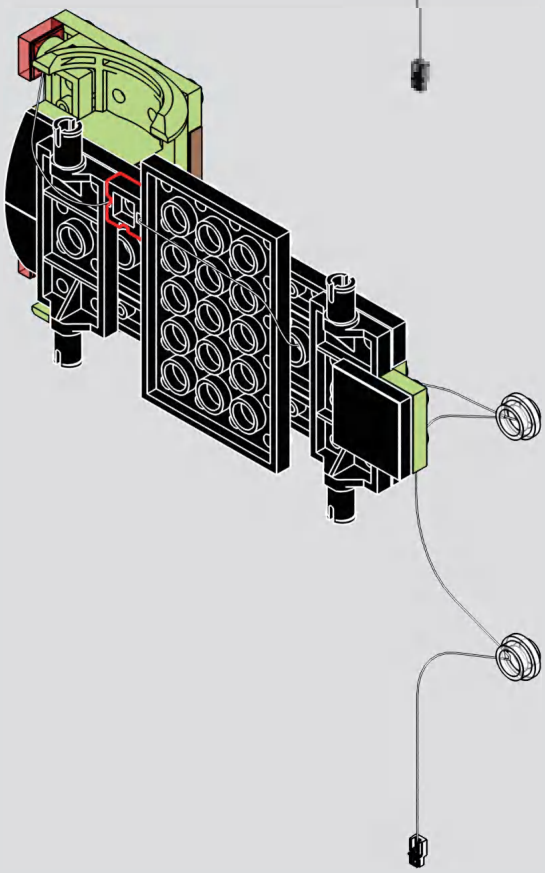

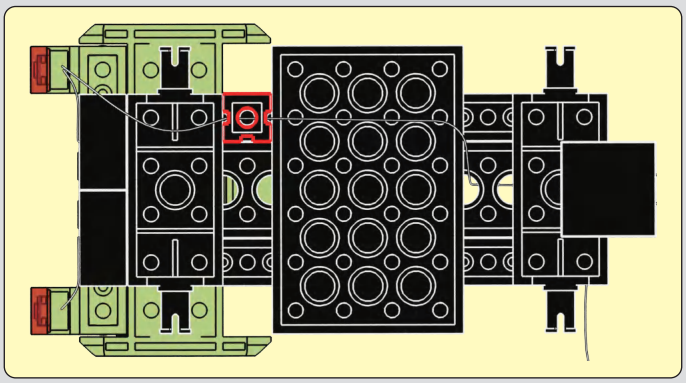

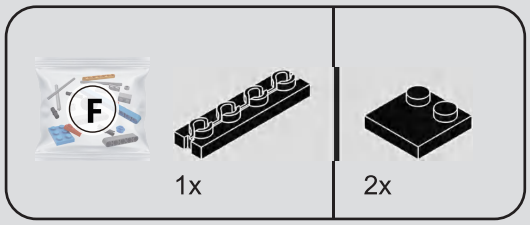


295

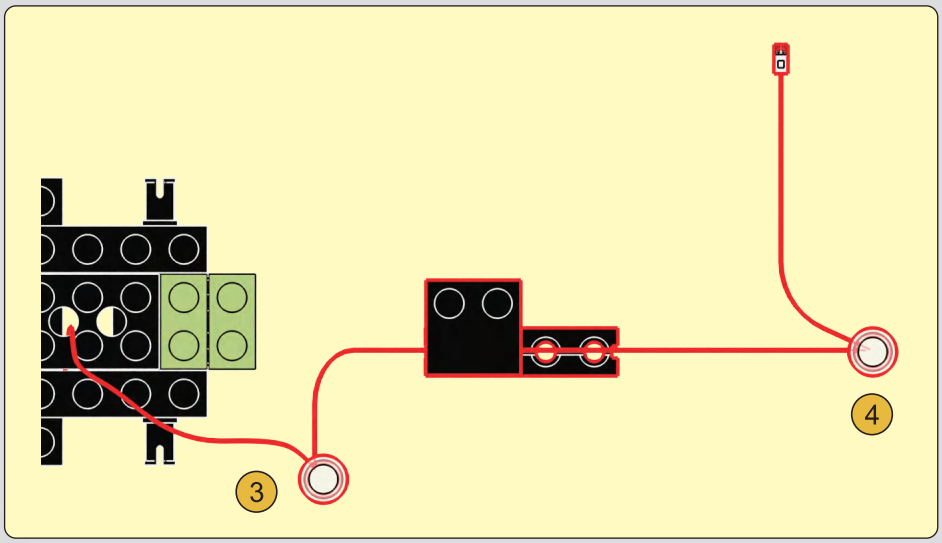


1

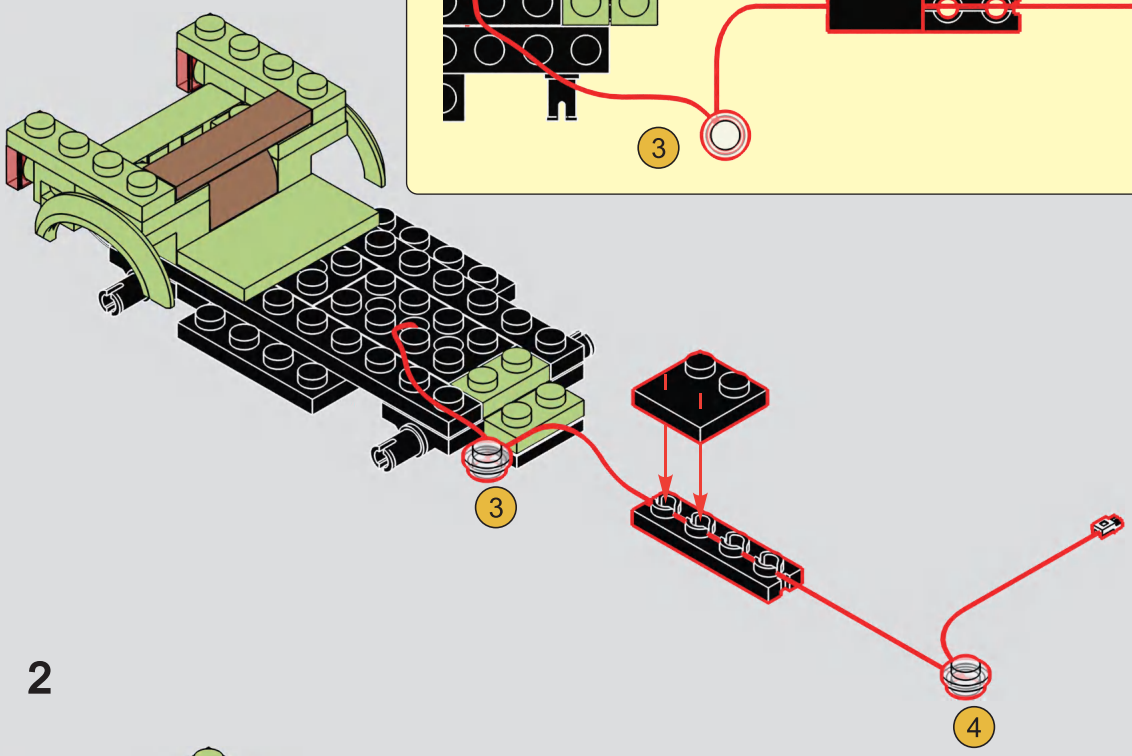


2

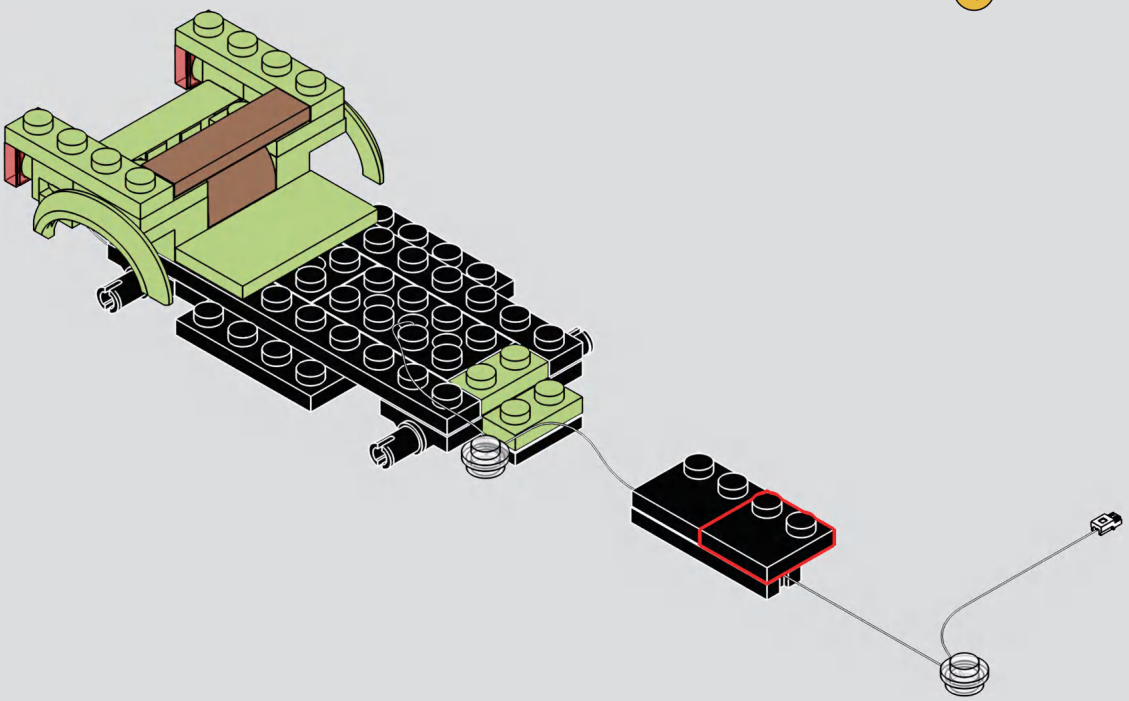

3

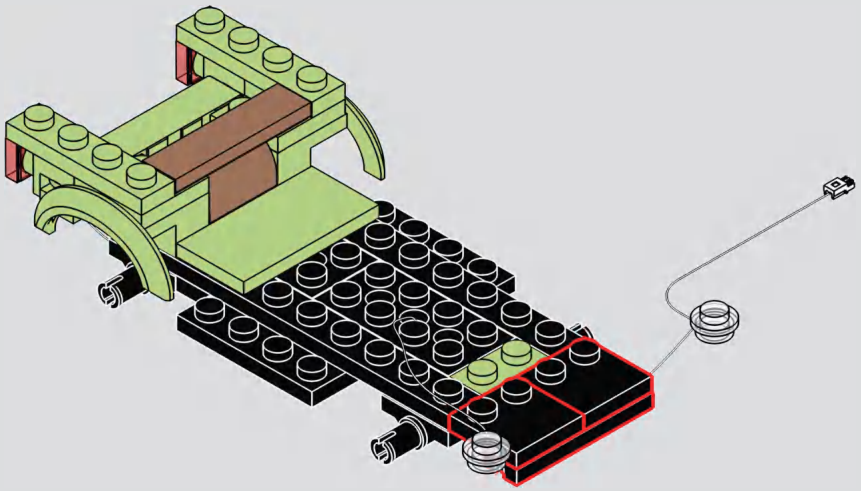

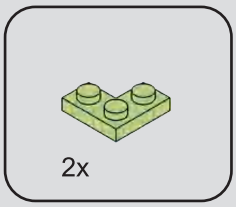


296

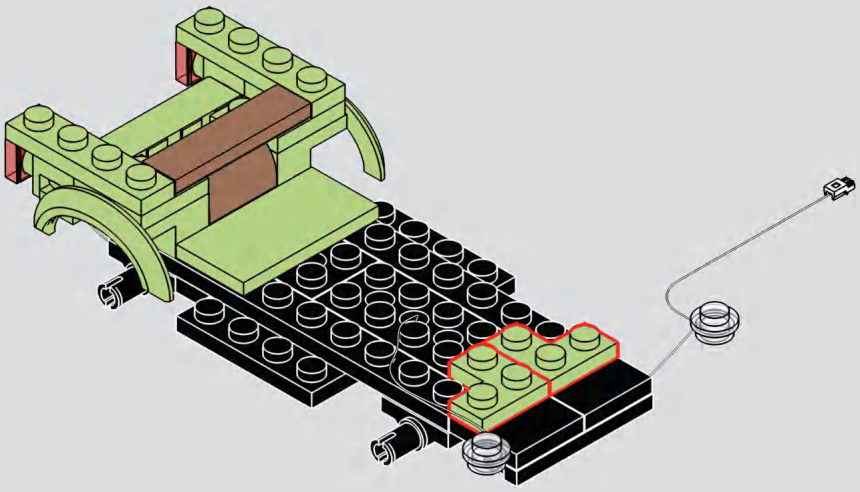

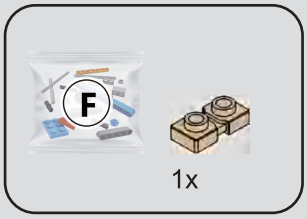


# 297

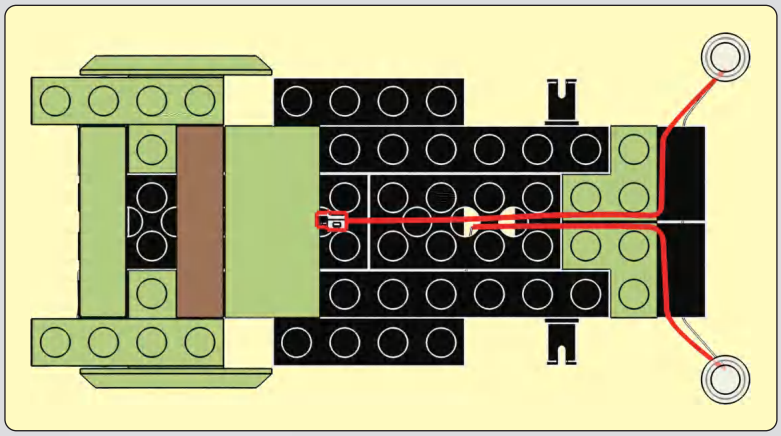

1

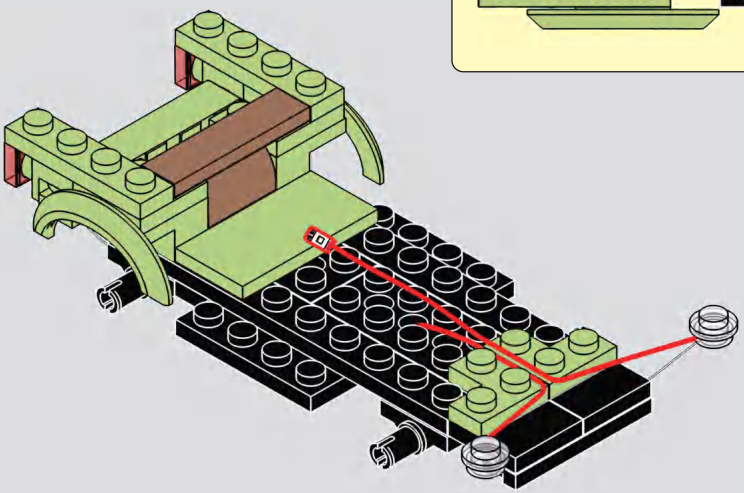

2

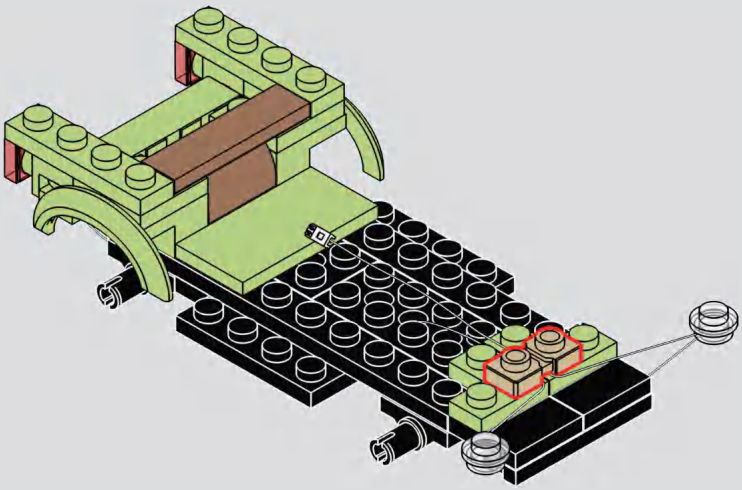

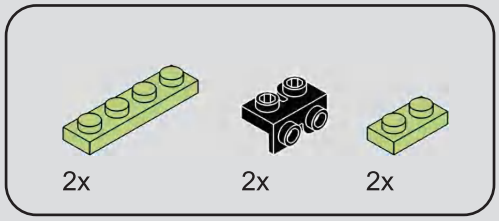


# 298

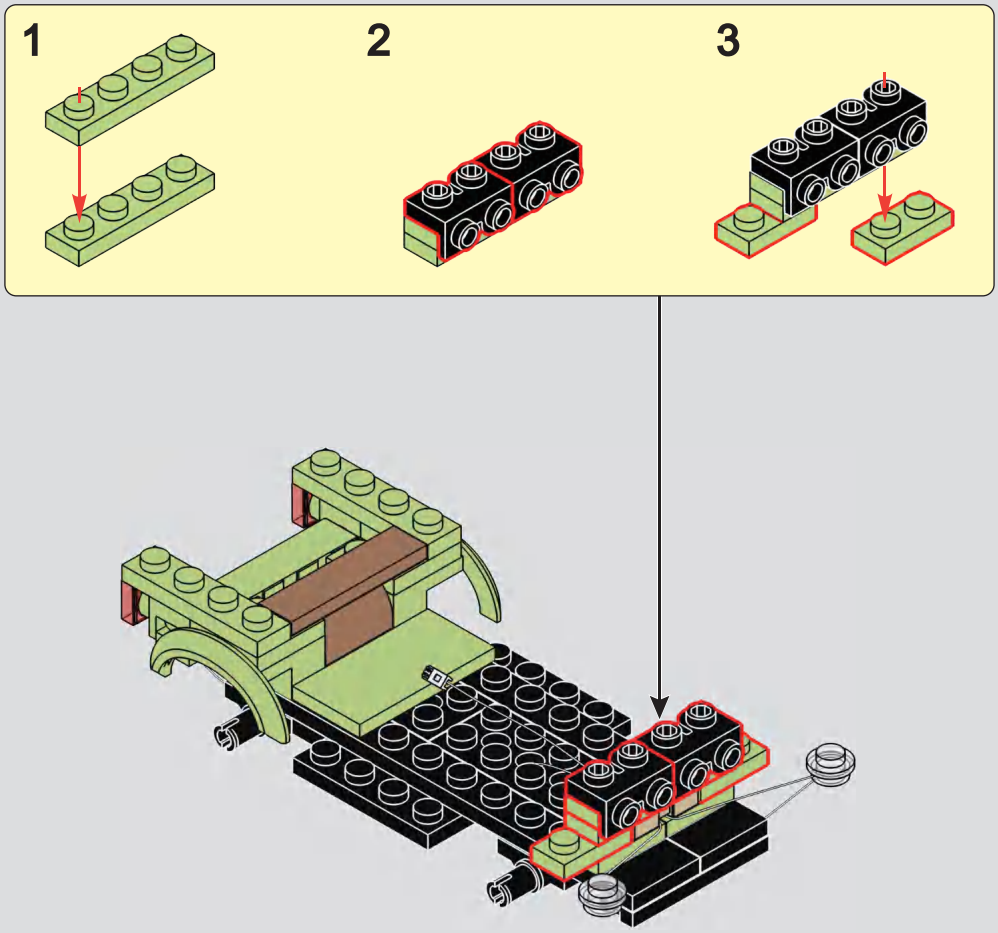

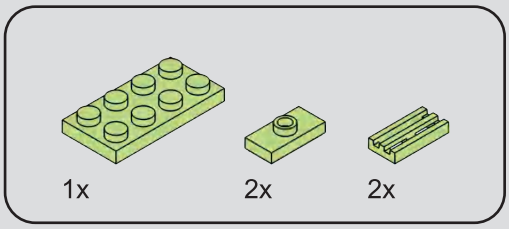


# 299

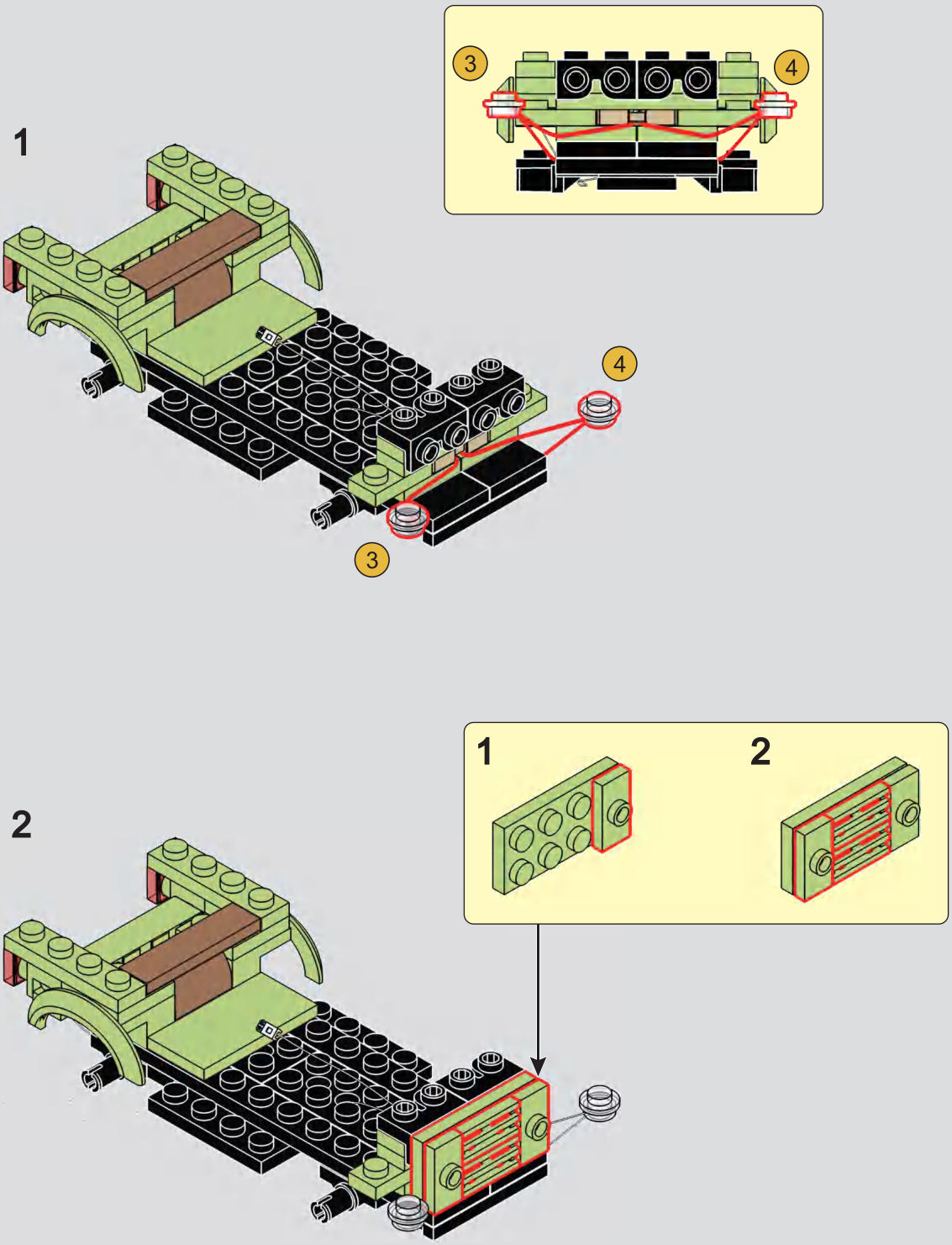

1x

# 300

1

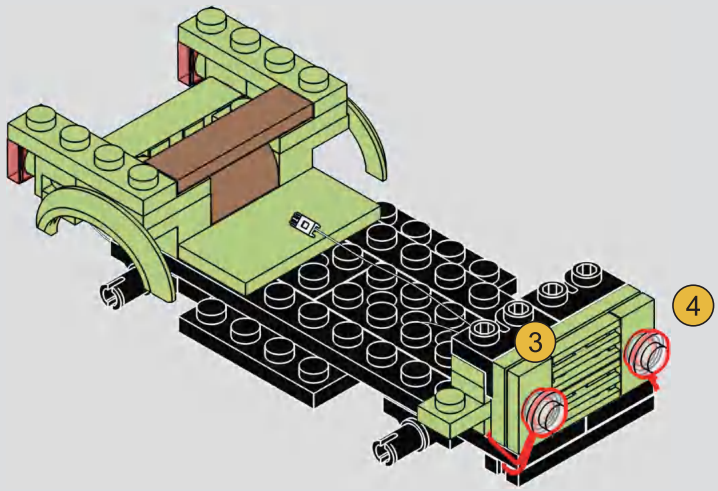


2

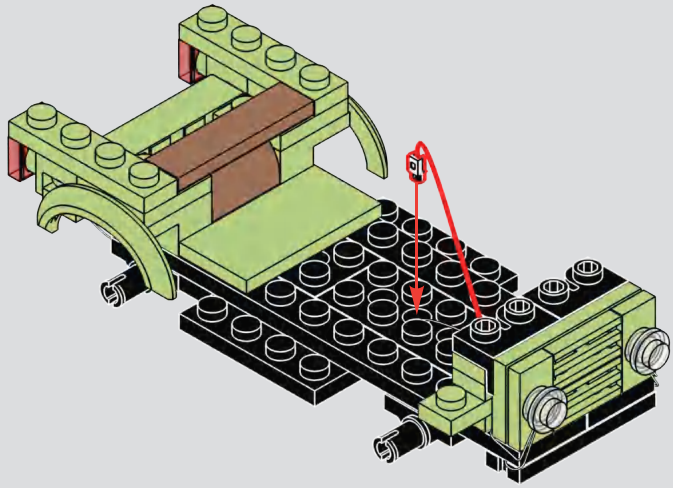

3

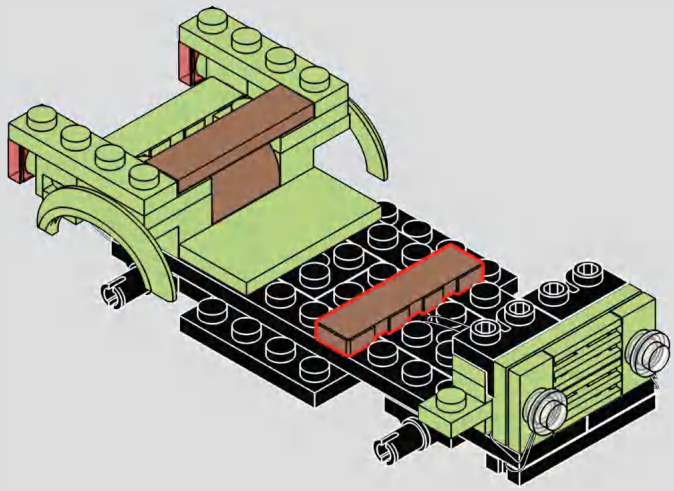

2x

# 301

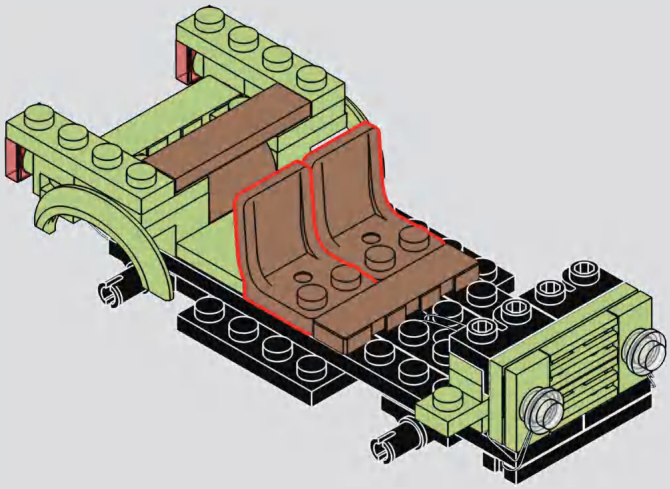

---

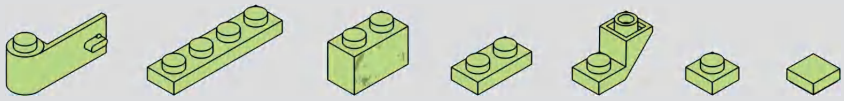

1x 1x 1x 1x 2x 1x 1x

# 302

1

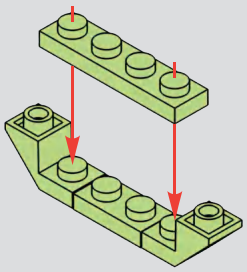

2

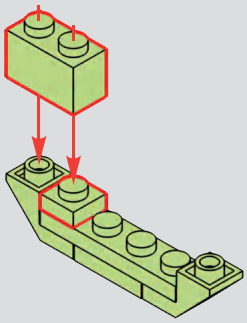

3

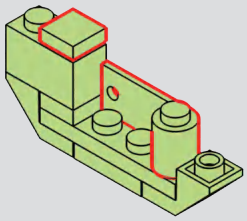

# 303

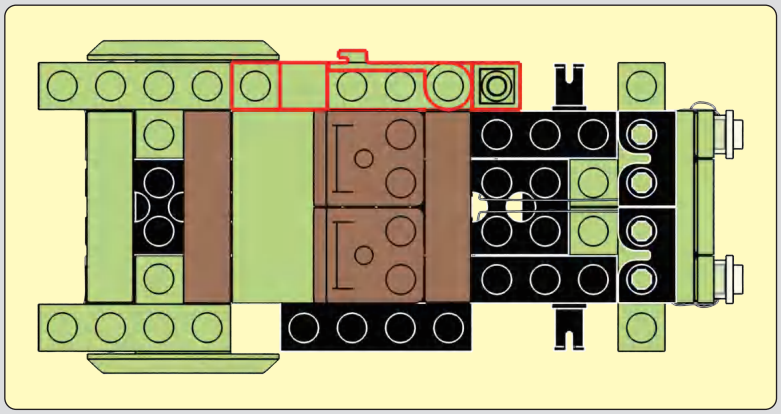

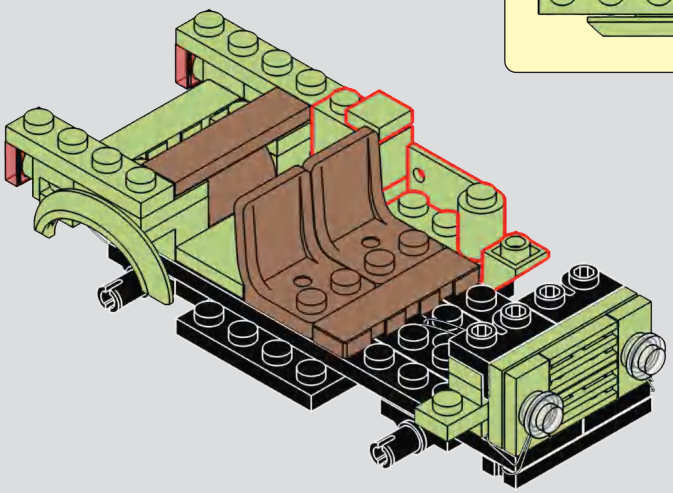

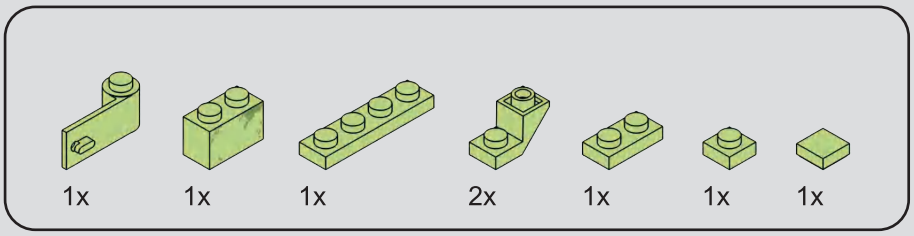


# 304

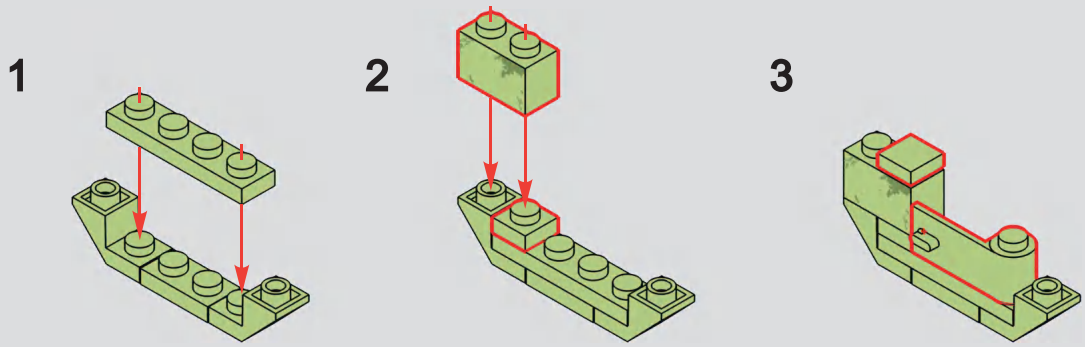

# 305

1

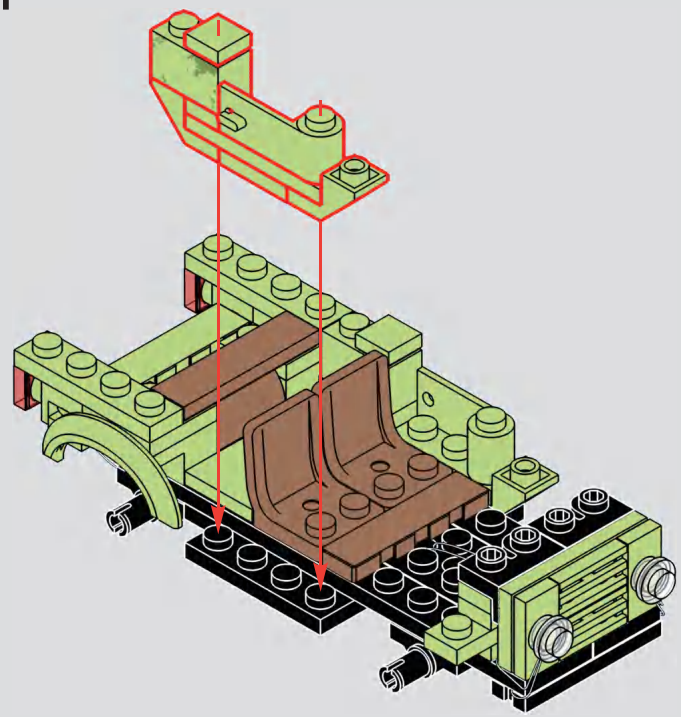

2

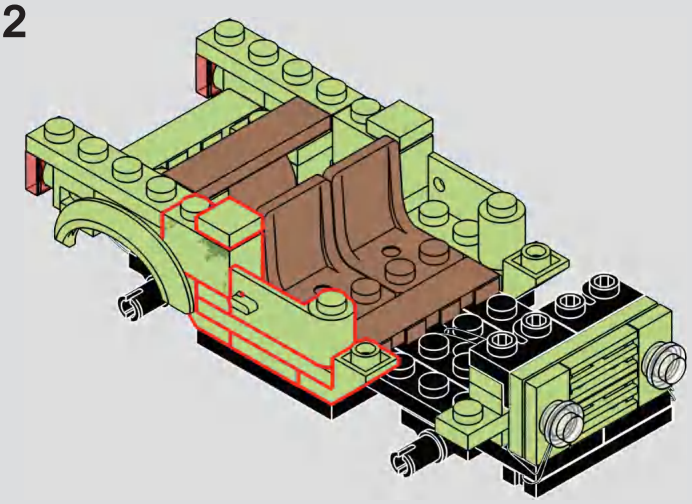

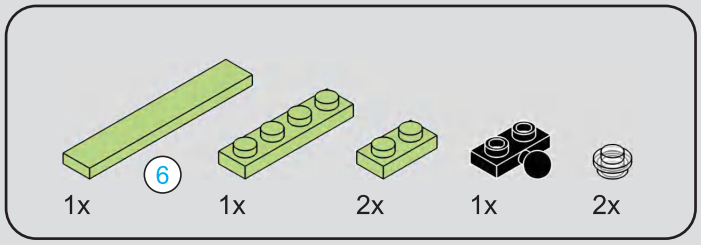


6 1:1

# 306

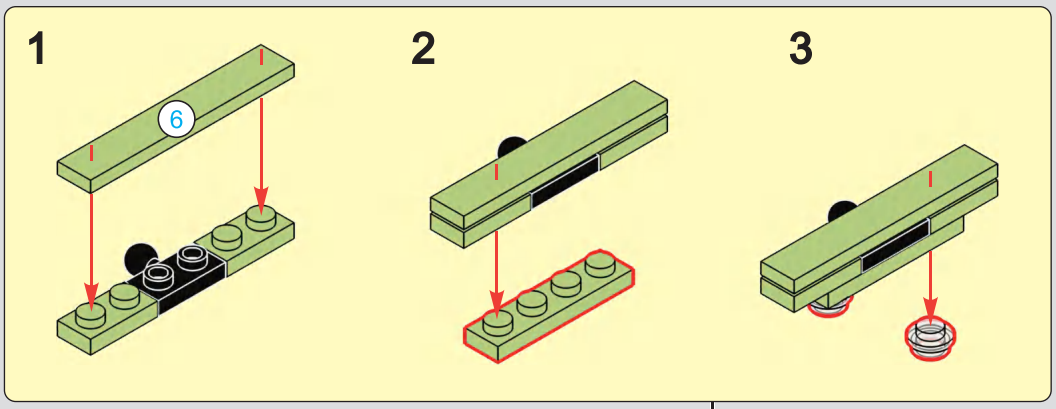


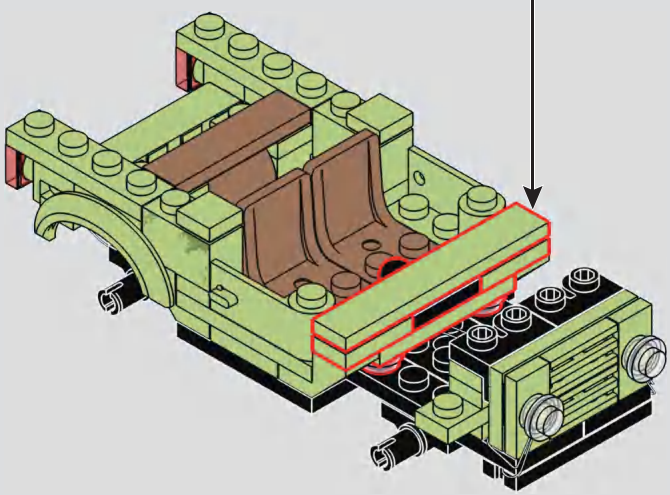

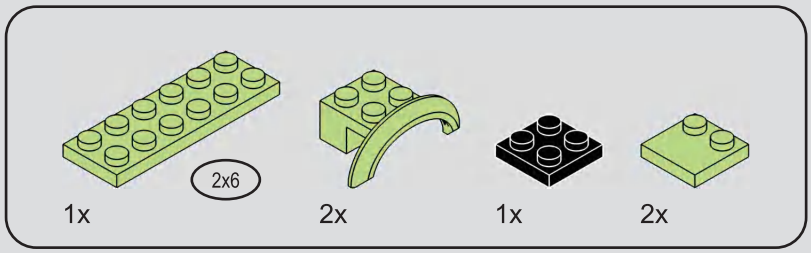


# 307

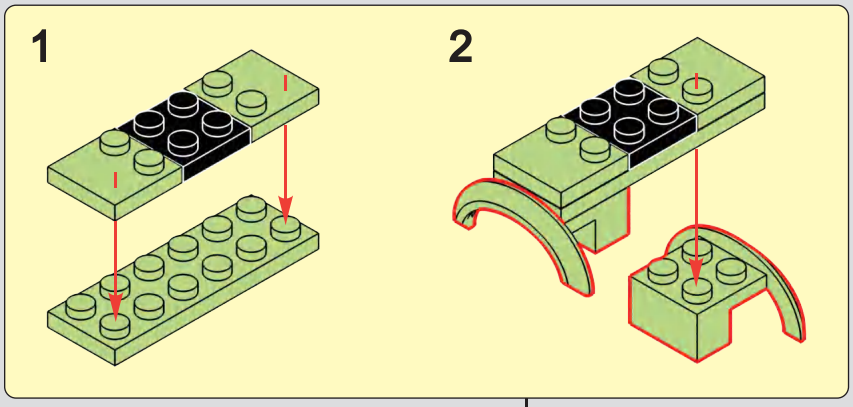


1

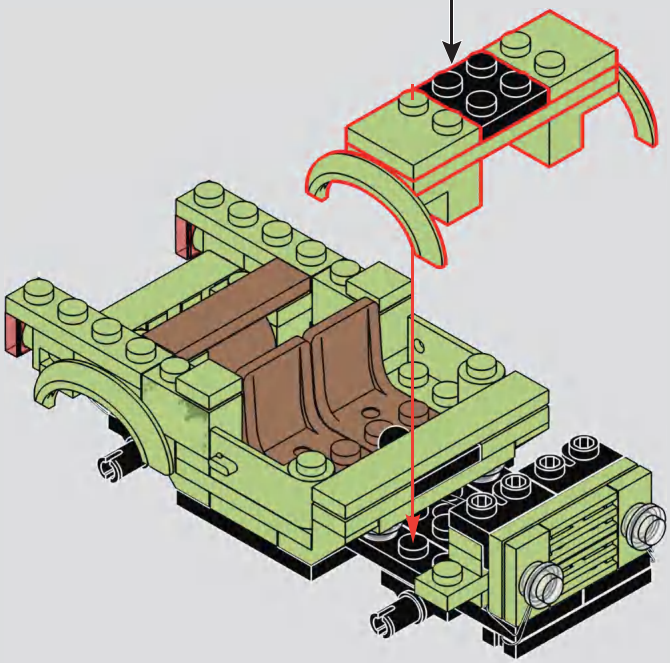

2

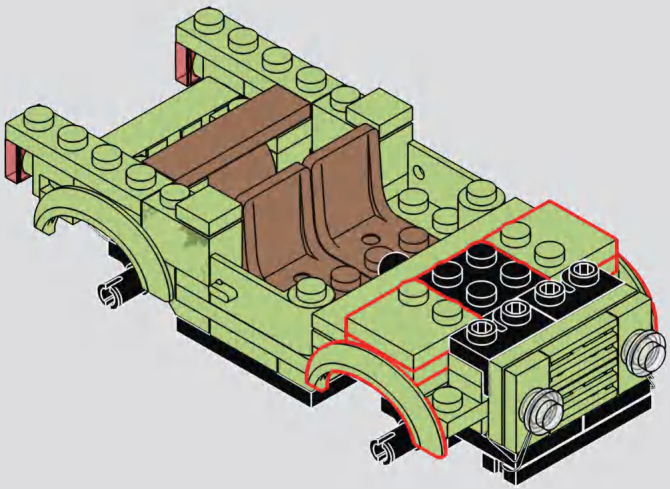

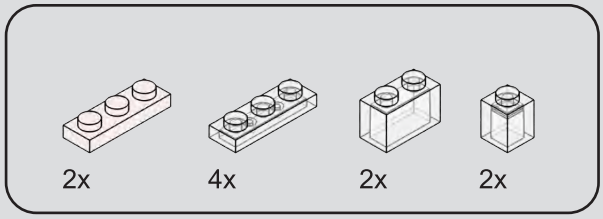


# 308

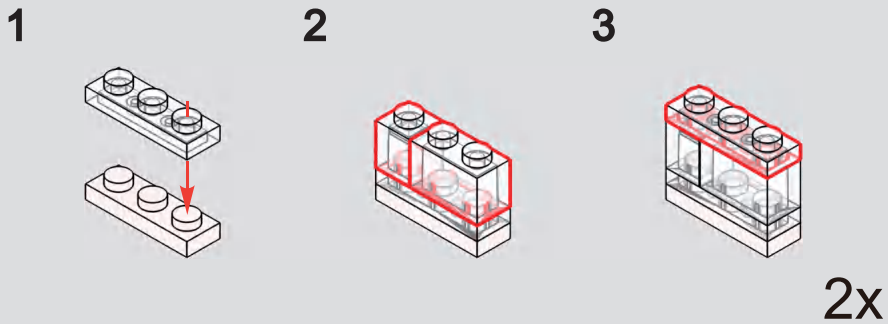


---

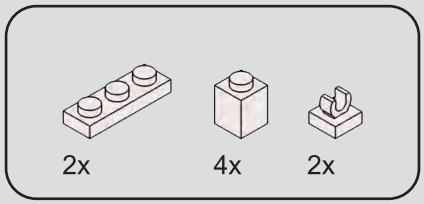


# 309

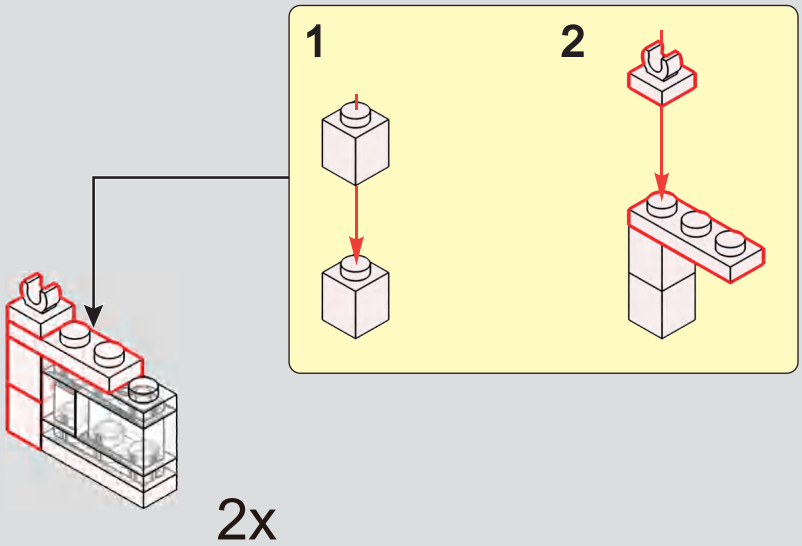

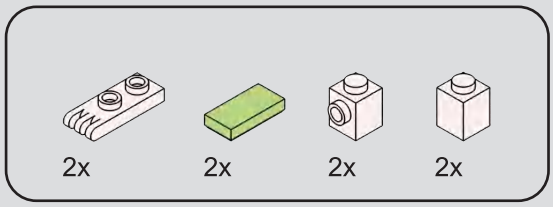


# 310

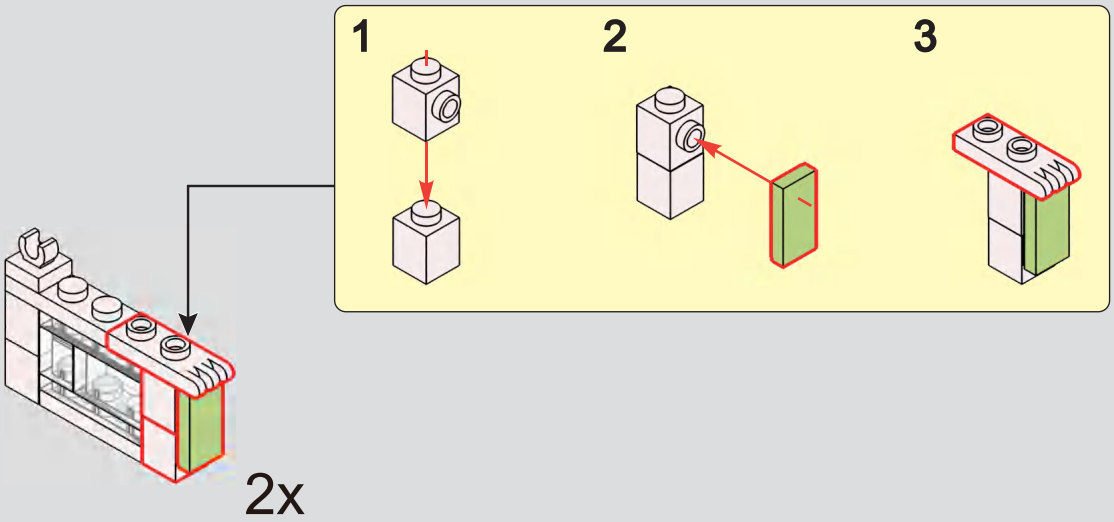


# 311

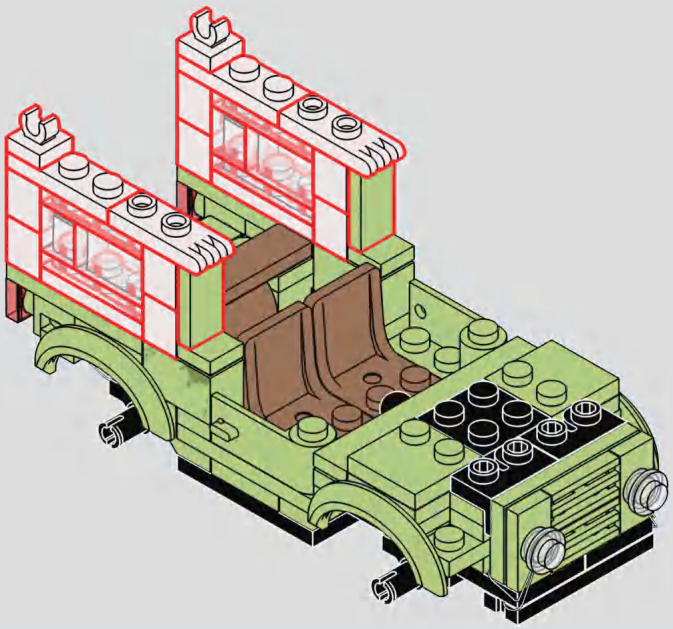

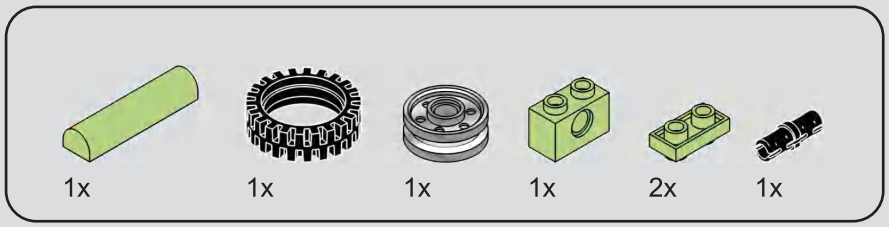


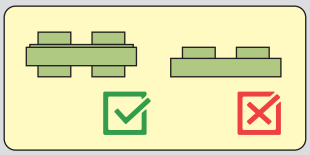

# 312

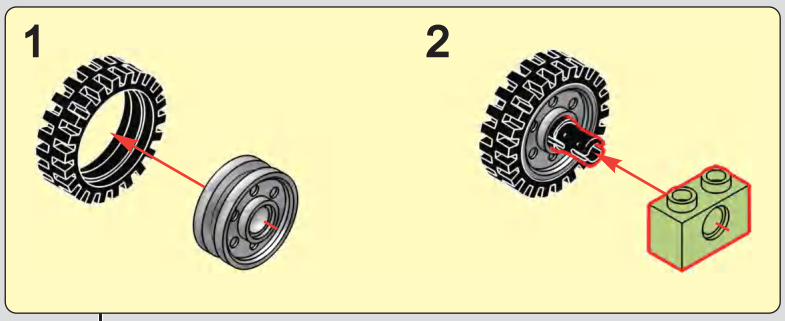


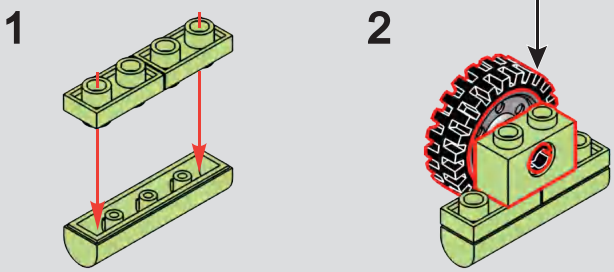


---

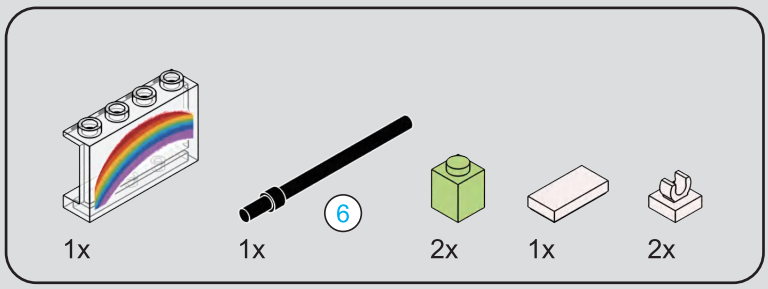

# 313

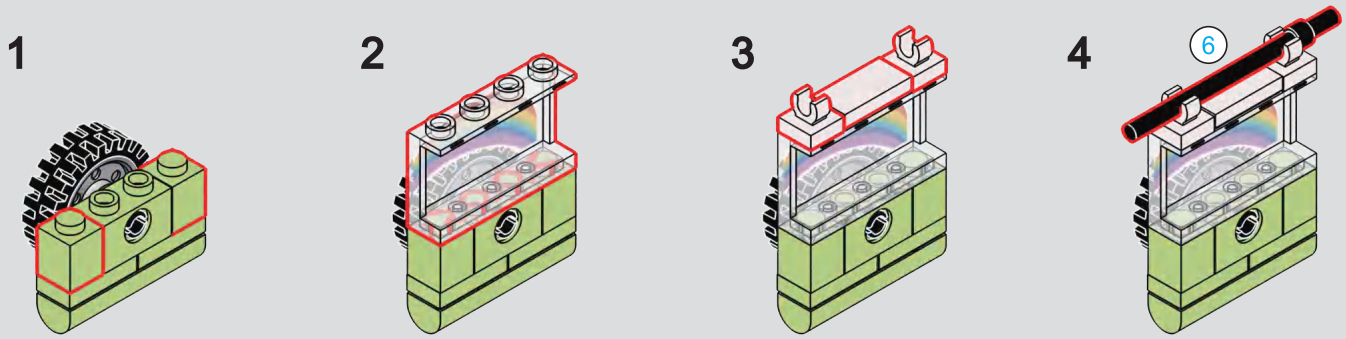

# 314

1

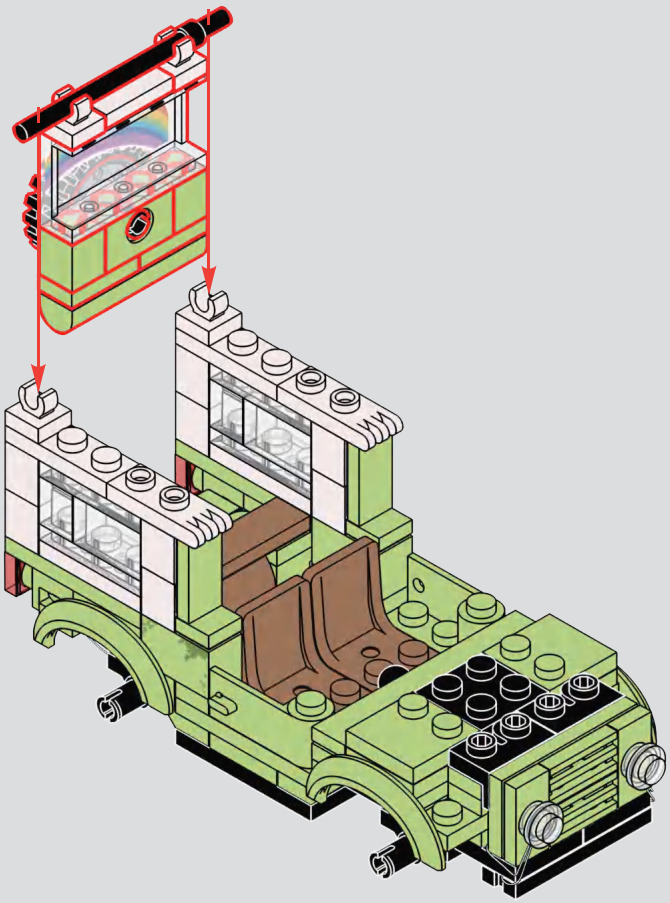

2

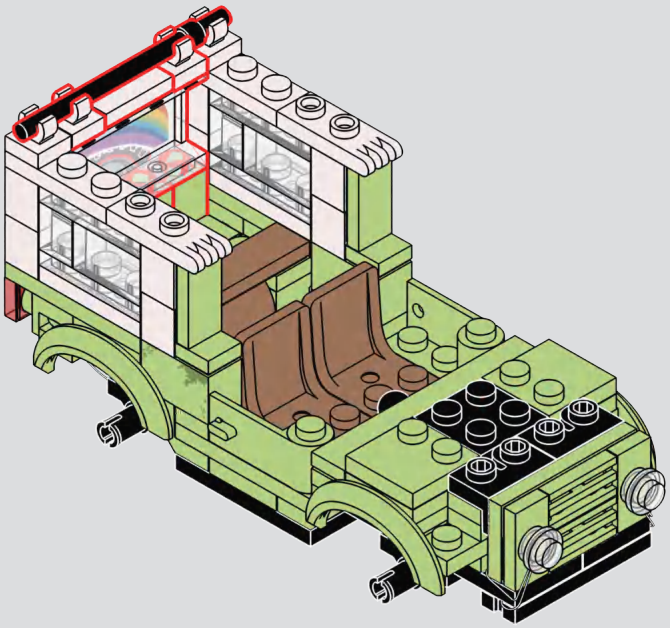

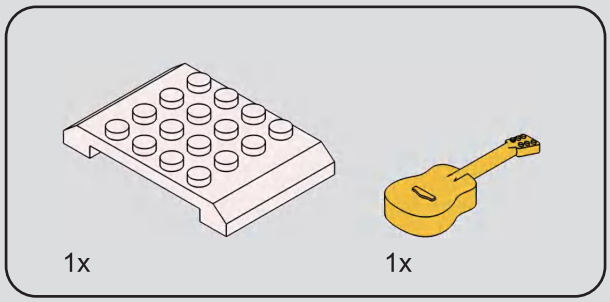


# 315

1

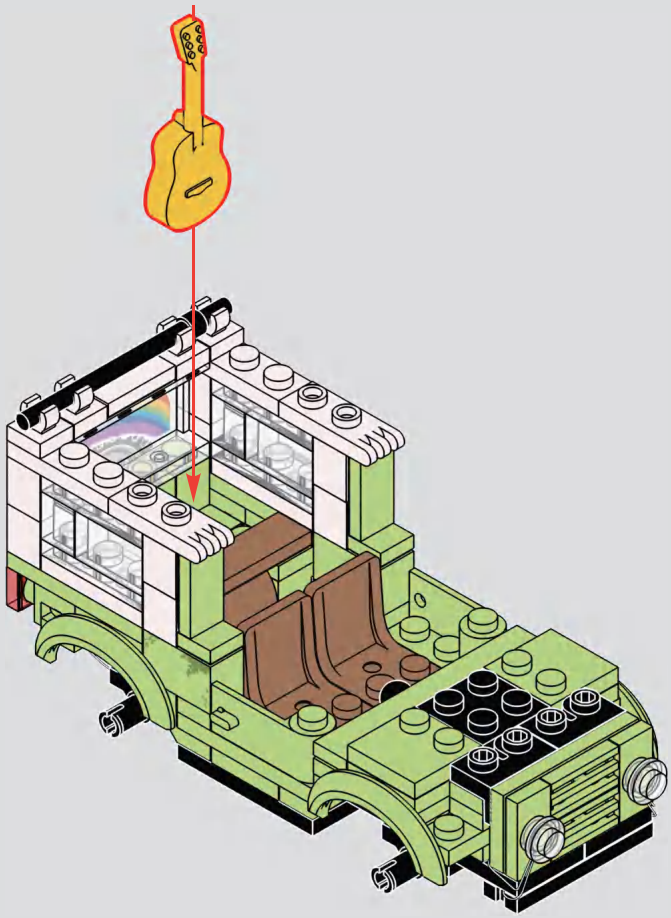

2

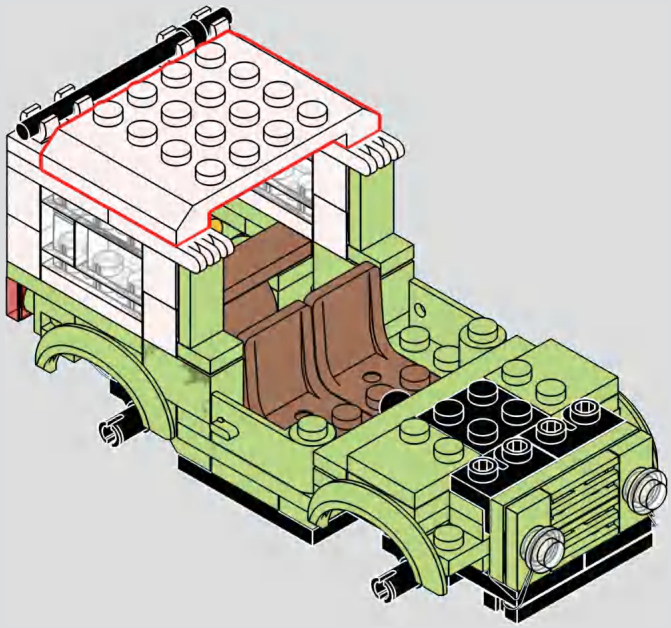

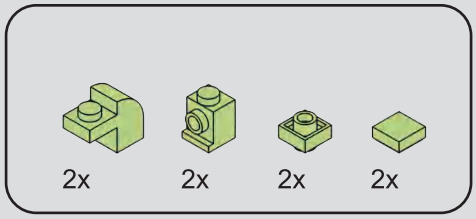


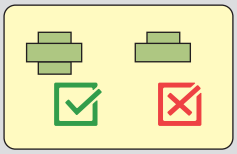

316

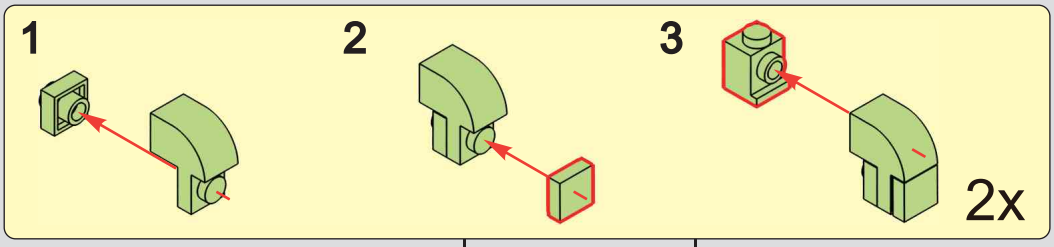


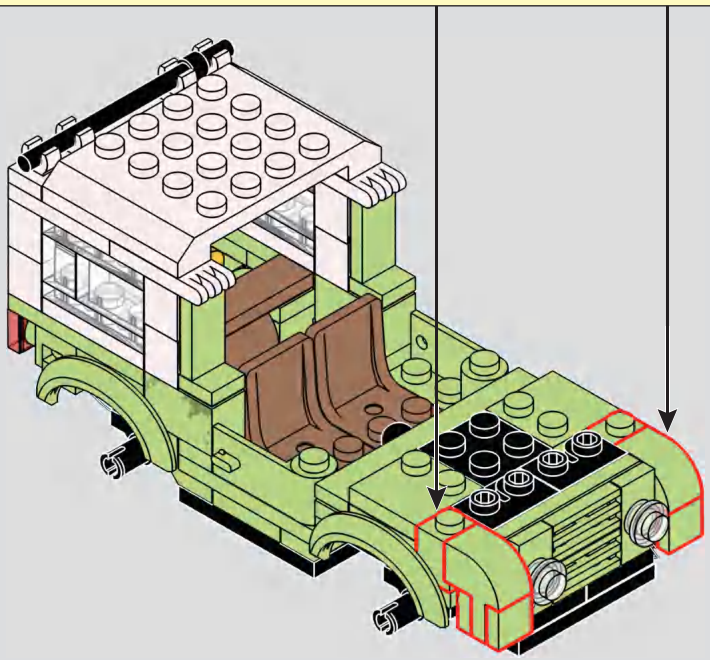

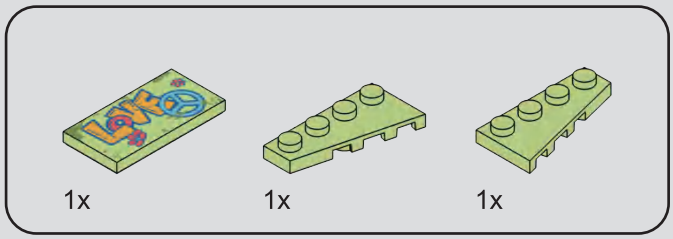


317

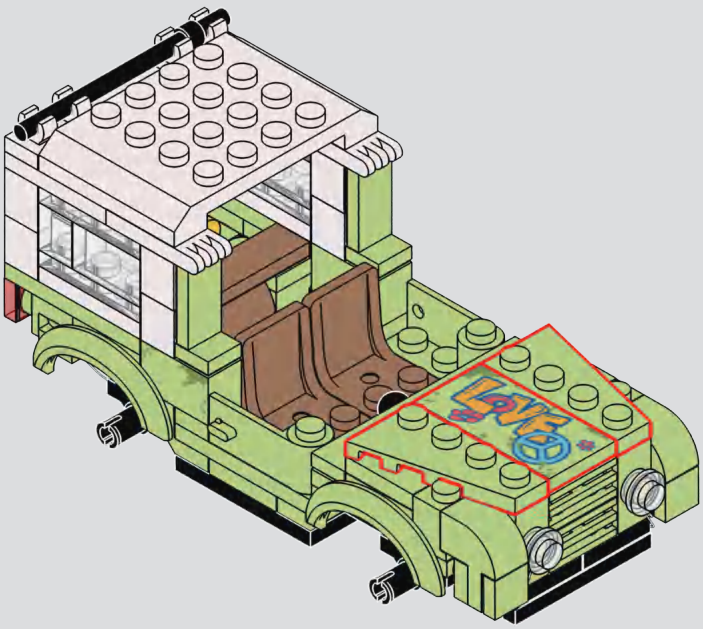

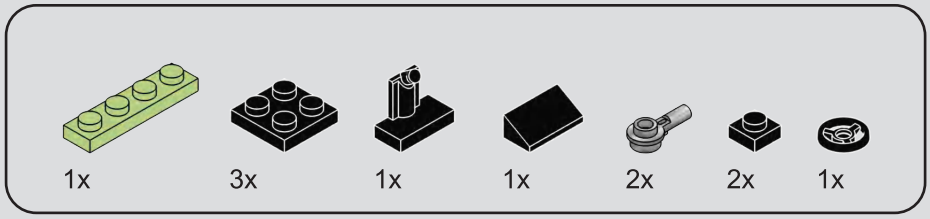


# 318

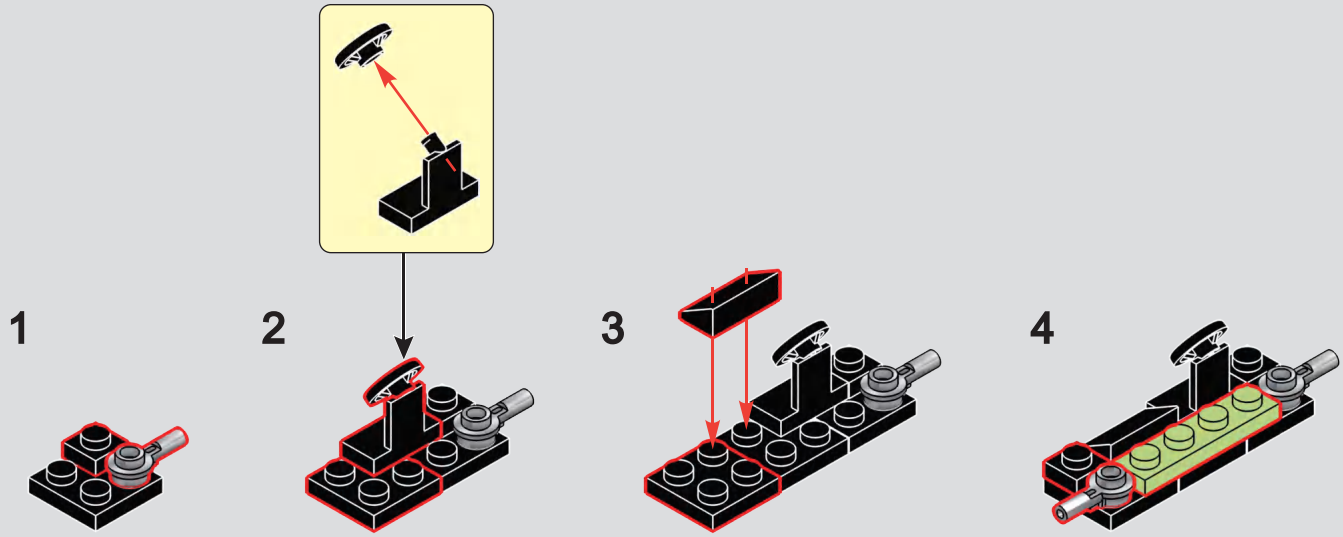


# 319

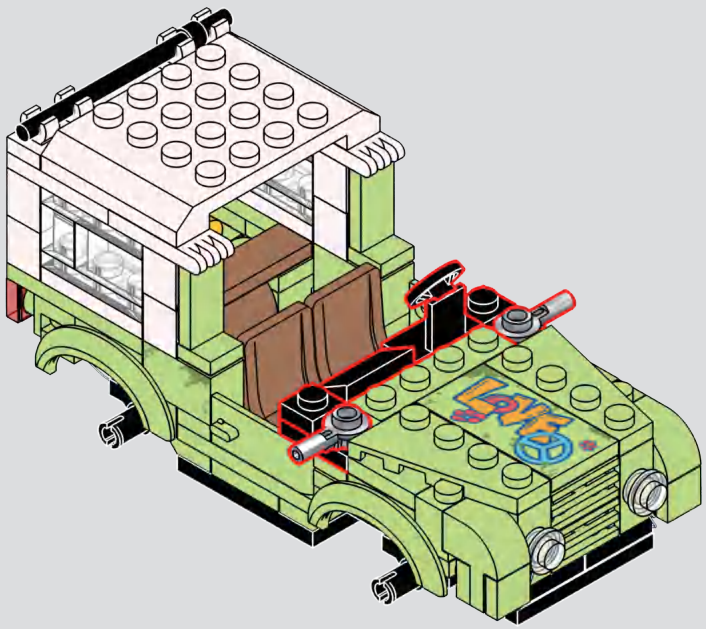

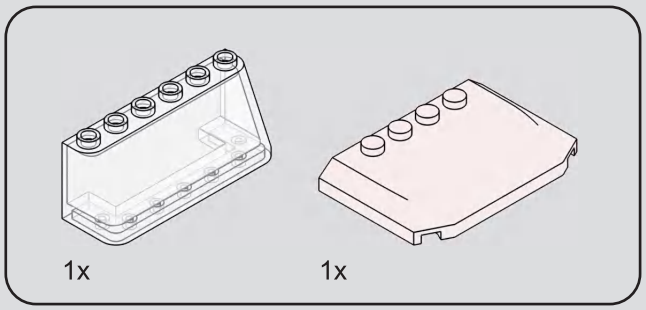


320

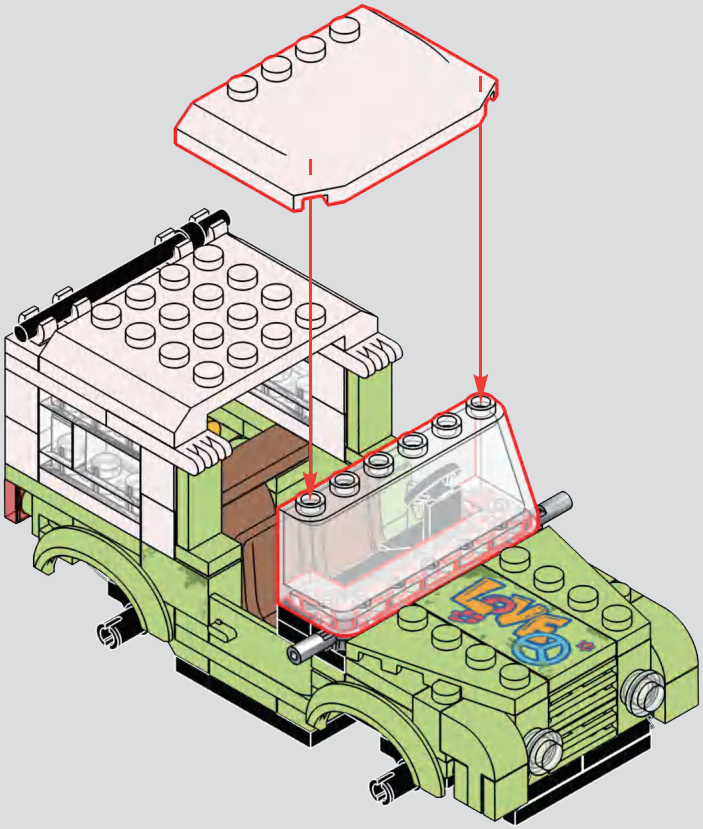

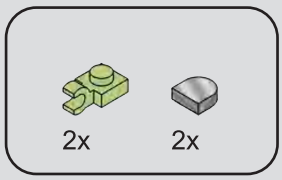


321

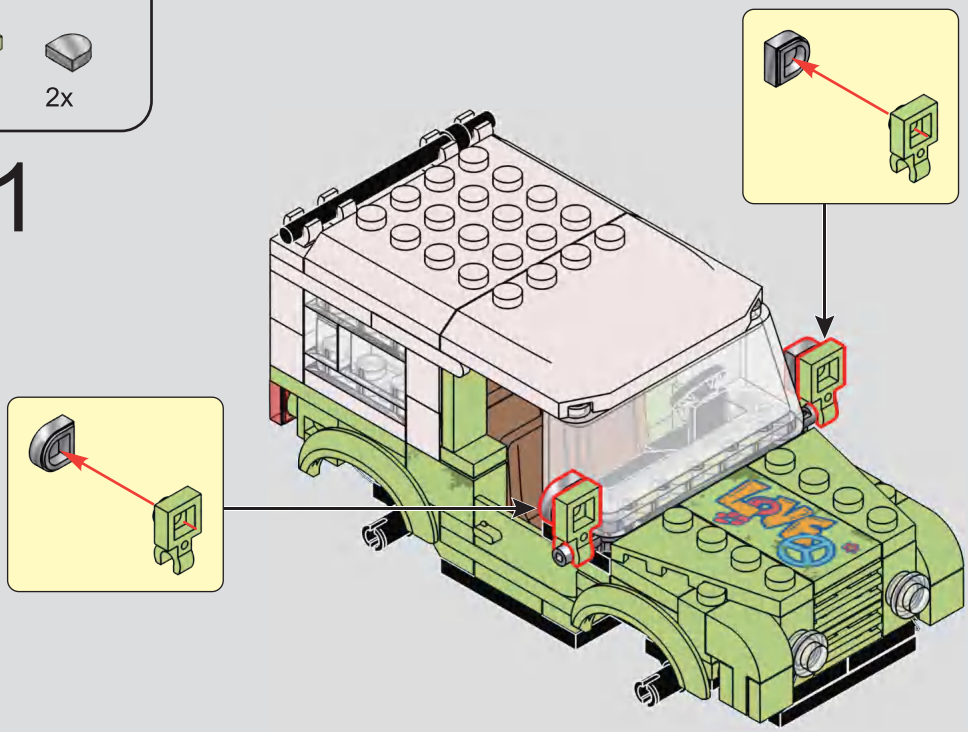

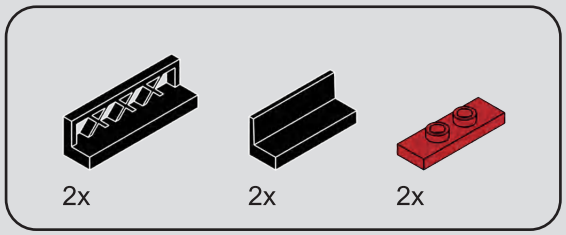


# 322

1

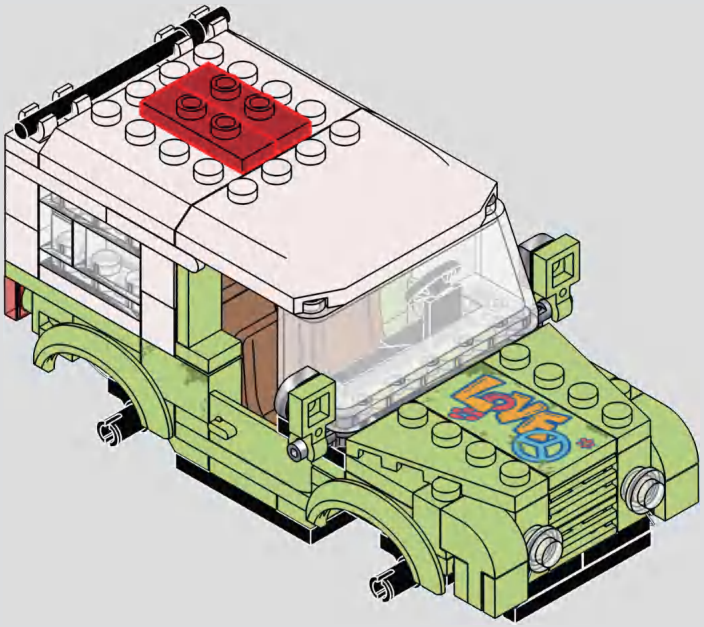

2

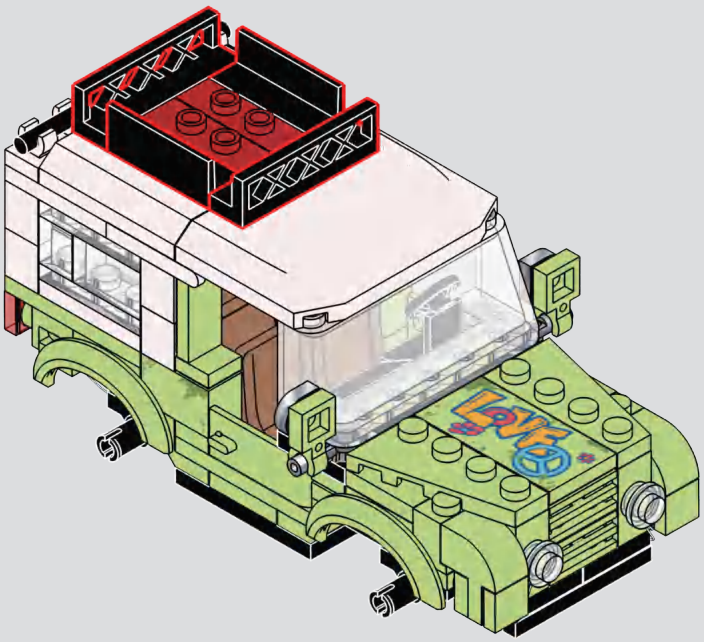

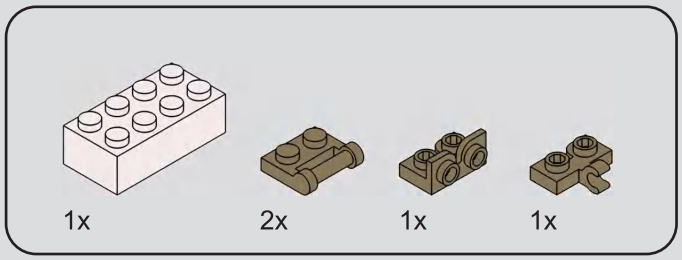


# 323

1

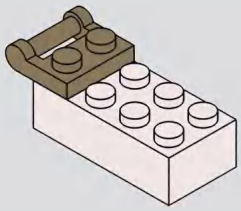

2

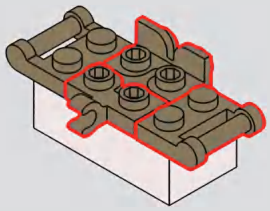

---

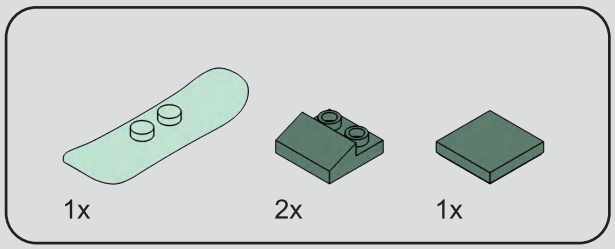


# 324

1

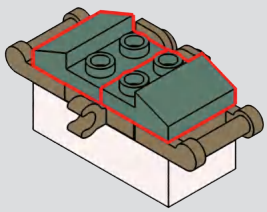

2

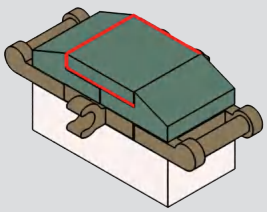

3

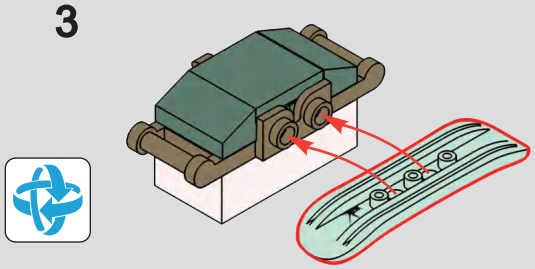

4

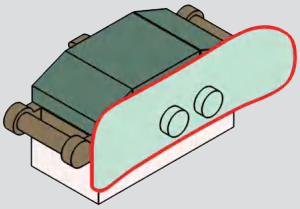

325

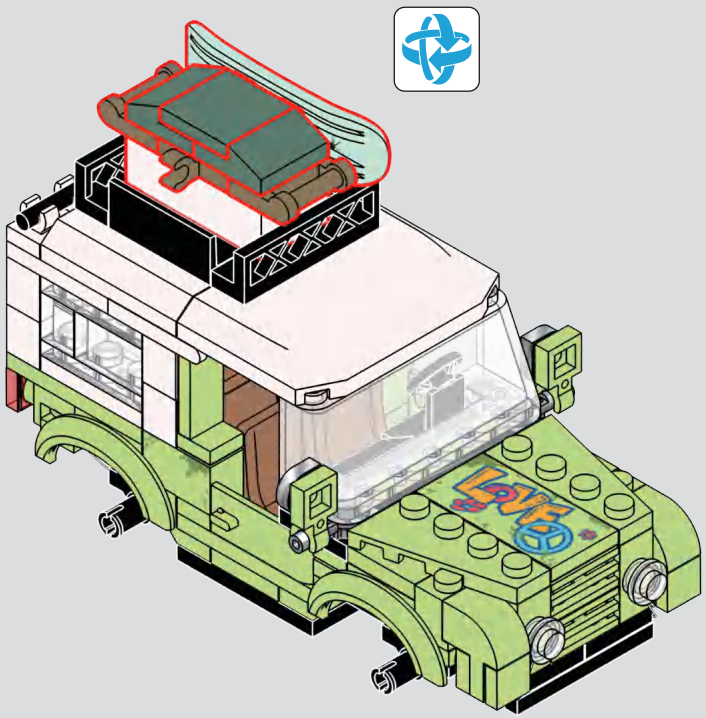

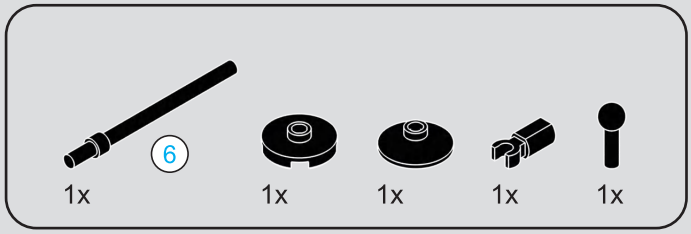

# 326

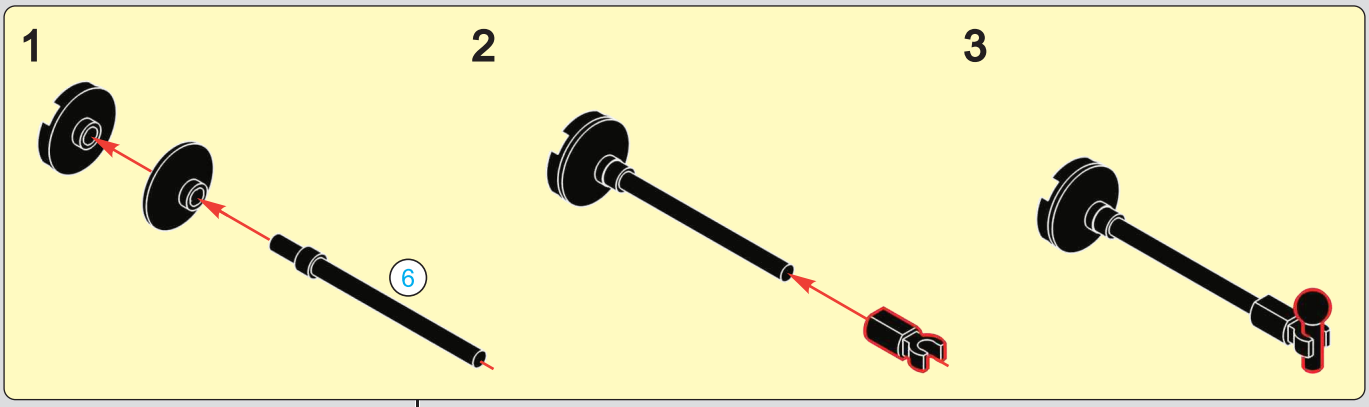


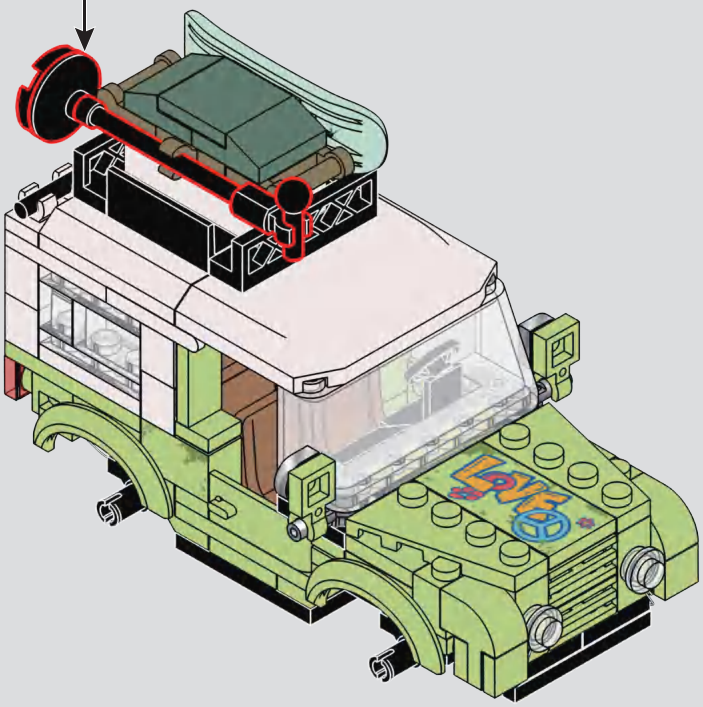

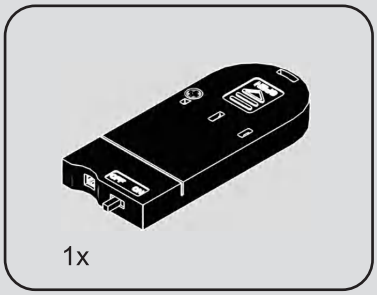
1x

# 327

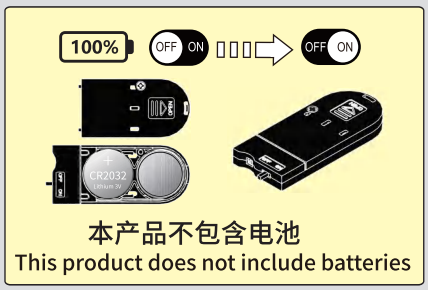
100%
OFF ON
OFF ON
CR2032
本产品不包含电池
This product does not include batteries

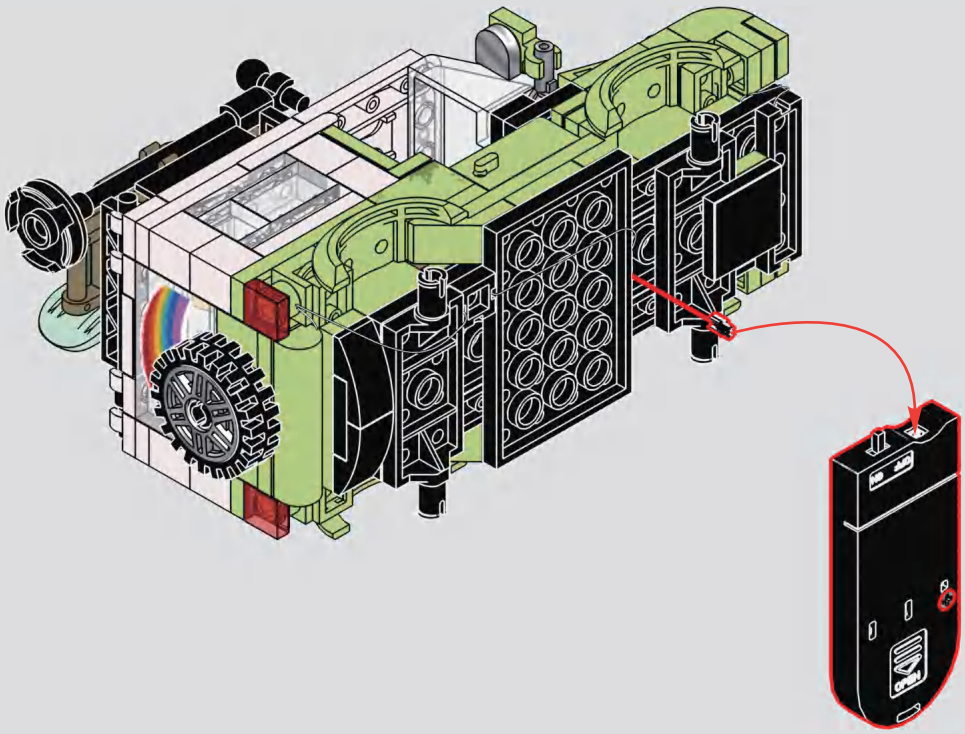

# 328

1

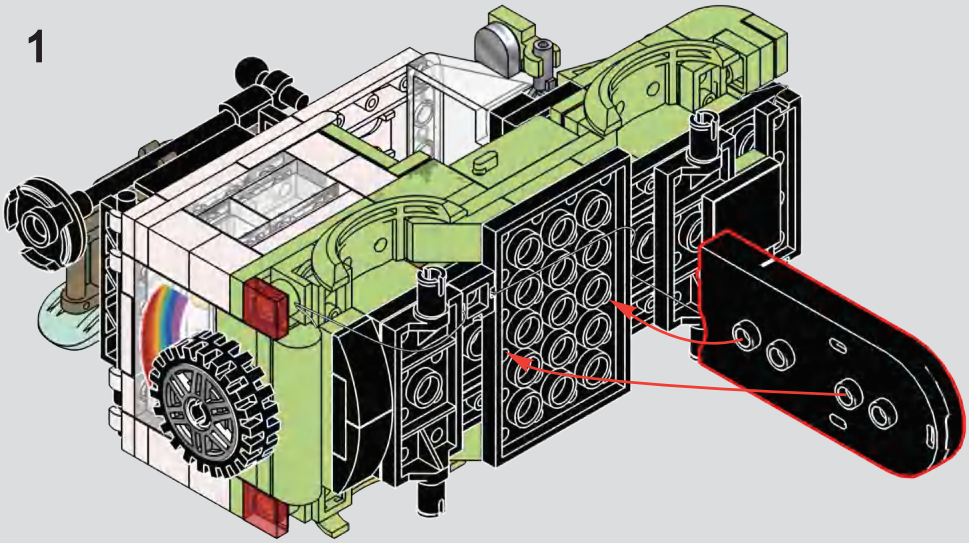

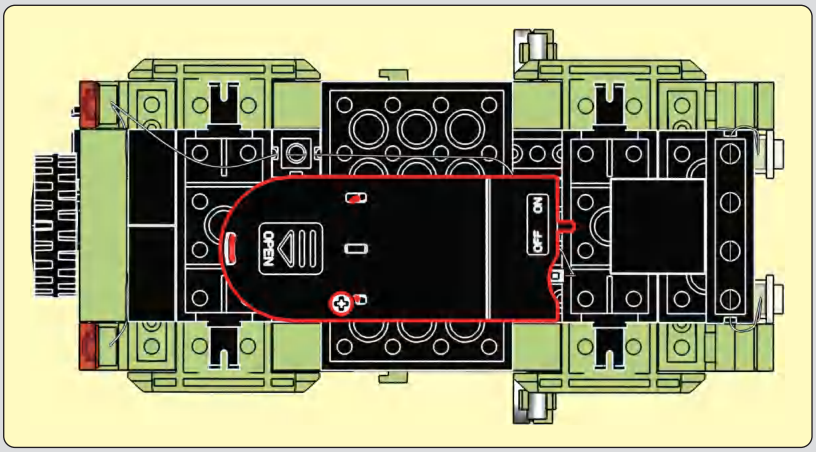


2

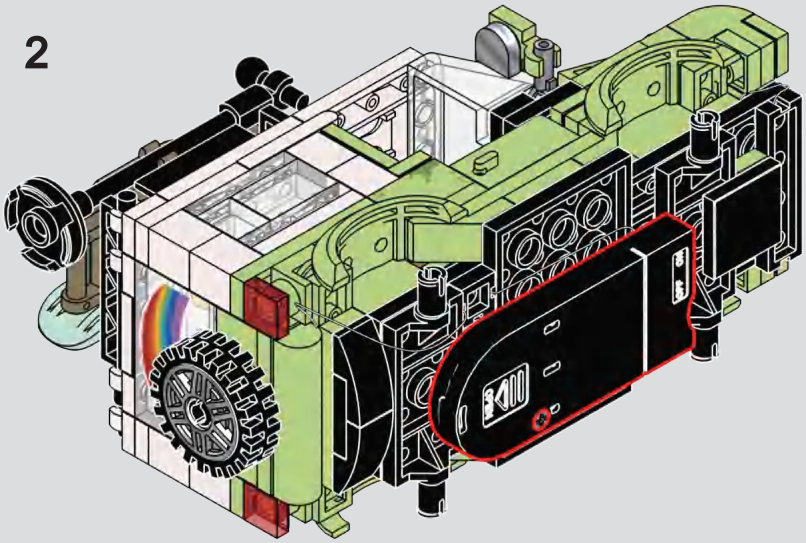

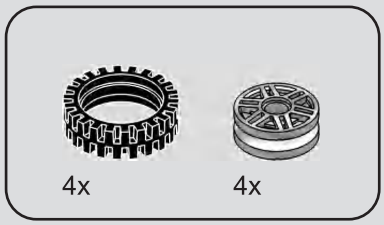


# 329

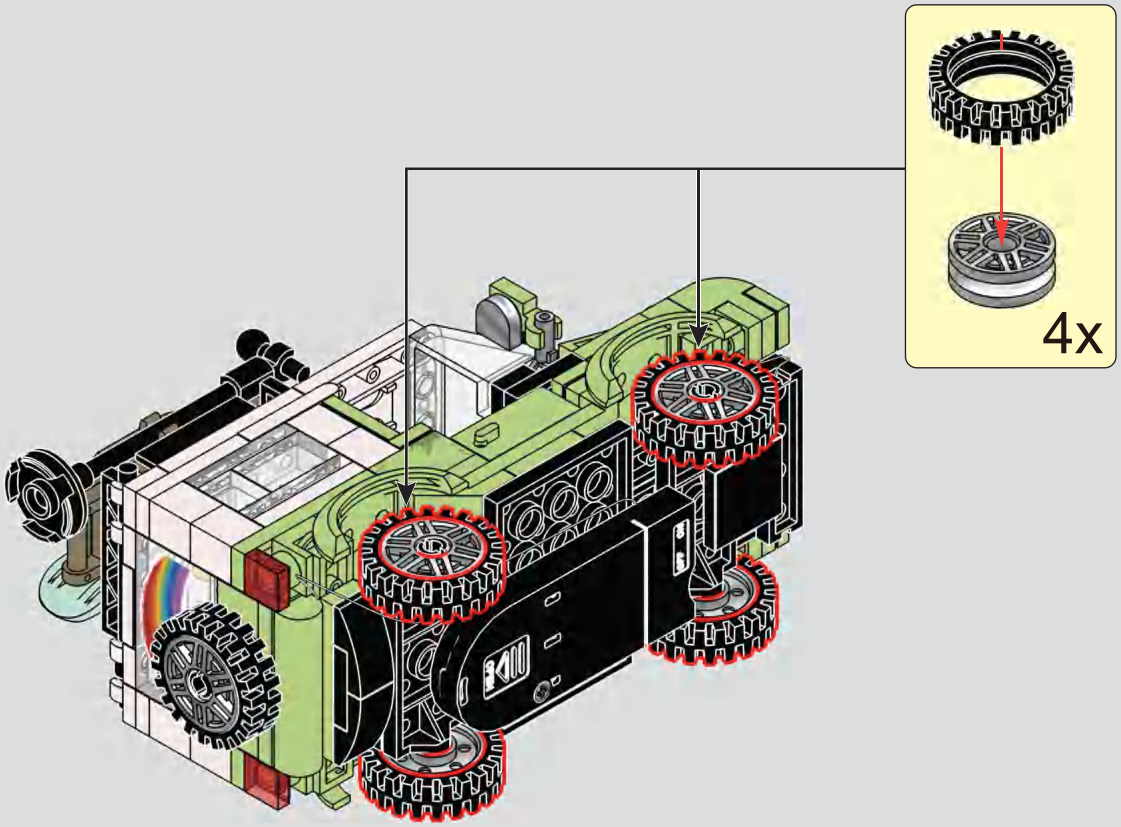

1

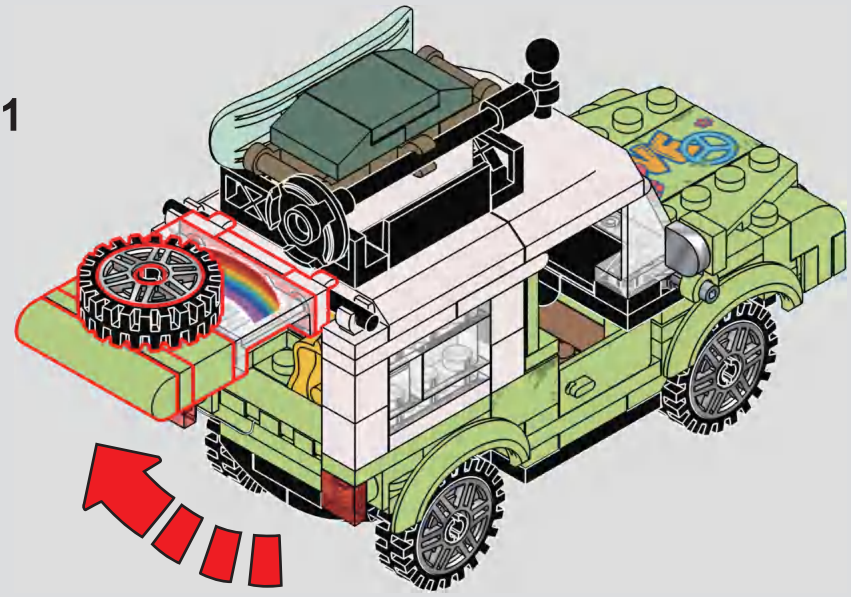

2

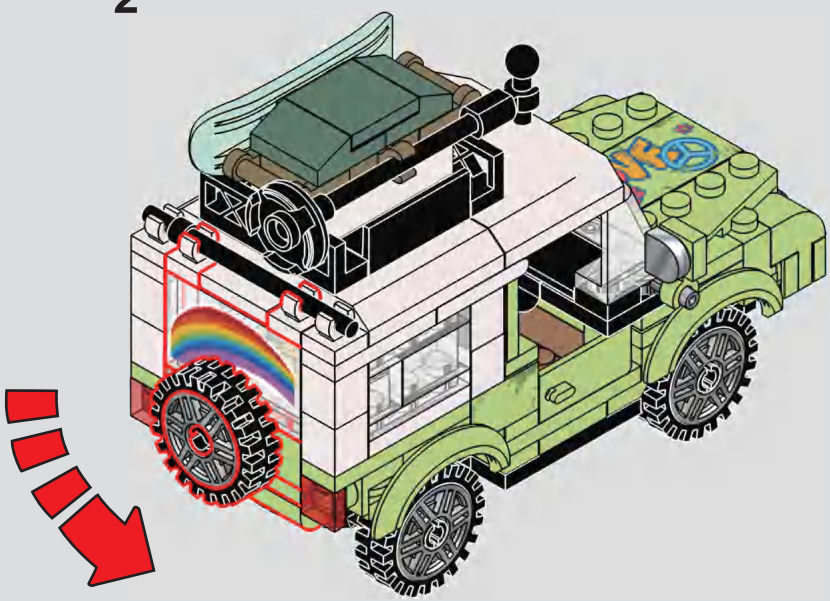

# 331

332

1
LUMIBRICKS
DON'T LEAN OVER
MOON BAR
COCKTAIL SPECIAL
HAWAIIAN SUNSET
$7.00
SAMOA FOG CUTTER
$4.50
PINO COOLER
$5.00
STEVE CRANE'S PEAR!
$6.50

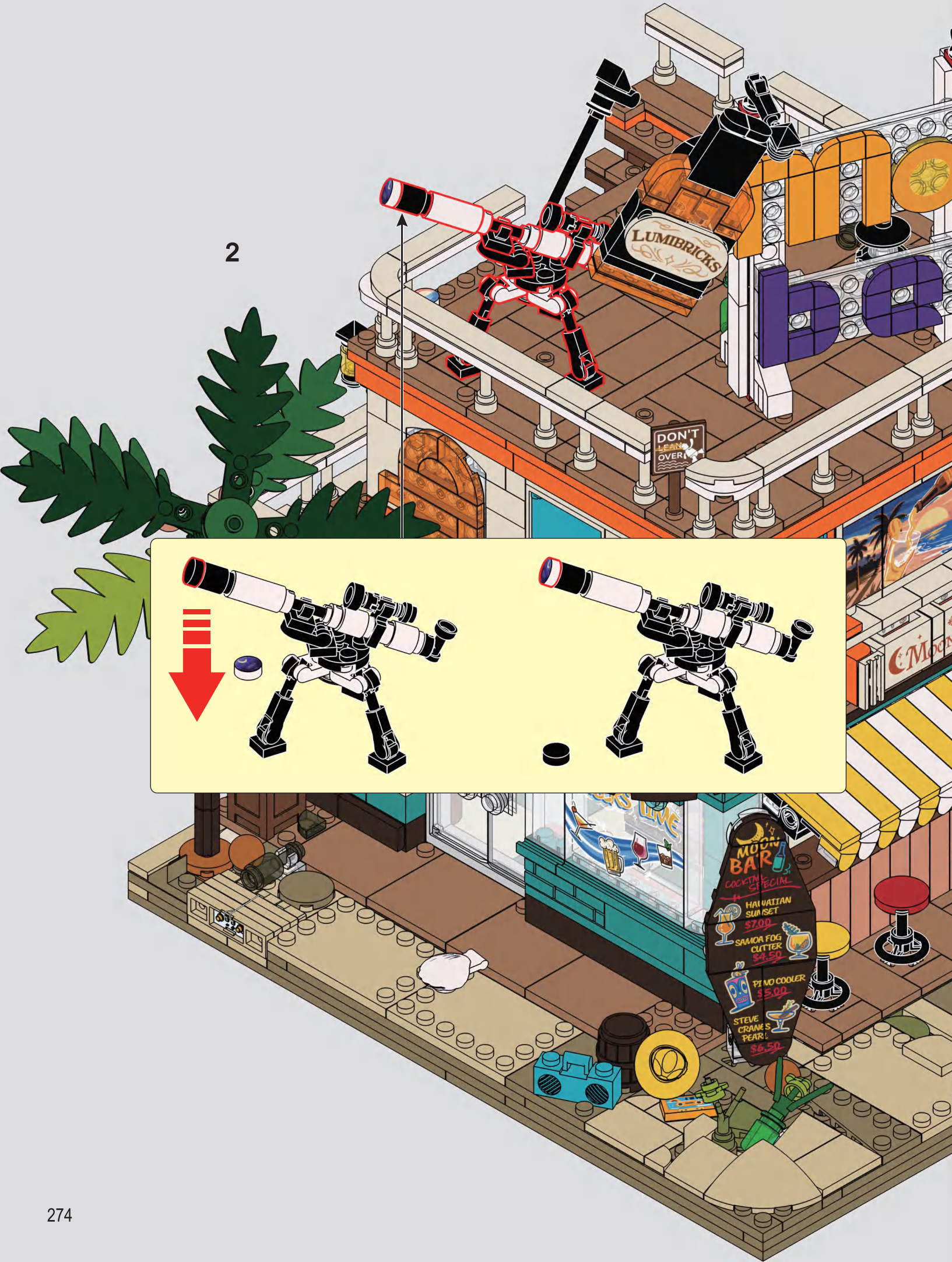
2
LUMIBRICKS
DON'T
LEAN
OVER
MOON
BAR
COCKTAIL SPECIAL
HAWAIIAN SUNSET
$7.00
SAMOA FOG CUTTER
$4.50
PI NO COOLER
$5.00
STEVE CRANE'S PEARL
$6.50

333

1
LUMIBRICKS
DON'T LEAN OVER
MOON BAR
COCKTAIL SPECIAL
HAWAIIAN SUNSET
$7.00
SAMOA FOG CUTTER
$4.50
PIMO COOLER
$5.00
STEVE CRANE'S PEAR!
$6.50

2
LUMIBRICKS
DON'T
LEAN
OVER
MOON
BAR
COCKTAIL SPECIAL
HAWAIIAN SUNSET
$7.00
SAMOA FOG CUTTER
$4.50
PI NO COOLER
$5.00
STEVE CRANE'S PEARL
$6.50

# • RETRO HOUSE/复古房屋系列

L9096
Spa Cabin/冰岛小屋

L9090
Aurora Cabin/极光观测木屋

L9083
Waterfall Cabin/瀑布小屋

L9075
Bamboo House/竹林小屋

V1.0

Lumibricks and Lumibricks logo are trademarks of the Lumibricks group.

WWW.LUMIBRICKS.COM

如果您遇到任何问题，请通过以下方式与我们联系：

lumibricks灯搭官方旗舰店

会员中心