LUMIBRICKS™

14014
2682PCS
16+



Bonus DIY Light Parts

2

Scan the QR code
for a PDF instruction

扫码关注公众号
获取电子版说明书

ABOUT LUMIBRICKS

Welcome to Lumibricks, where imagination meets illumination in the brick world!

Formerly known as FUNWHOLE, the world's first lighting bricks manufacturer, Lumibricks continues its legacy as a trailblazer in the world of building brick sets with a unique twist - integrated lighting that transforms every creation into a radiant masterpiece.

Every Lumibricks' set celebrates the joy of building and the magic of illumination. Whether you're crafting intricate architectures or imaginative scenes, the design details and lighting features bring the sets to life, and also bring you joy and shine whether it is the day or night.

At Lumibricks, we believe in the power of light to transform and elevate. With our slogan, "Delight day and night," we invite you to explore the possibilities of illuminated brick sets. Discover a hobby that doesn't just shine - it glows with your inner creativity.

欢迎来到Lumibricks灯搭的乐园

在这里，我们不仅仅是玩具制造商，我们还是创造快乐的艺术家。

自2014年诞生起，Lumibricks灯搭（原FUNWHOLE）就坚守一个独特的愿景：在日与夜的交替中，为我们的玩家揭示积木之美的无限可能。

作为全球领先的灯光积木品牌，本着充分表现积木套装整体之美的初衷，Lumibricks致力于灯光积木套装产品的开发，将积木与灯光合为一体。

Lumibricks不仅仅是一套普通的积木，更是代表了一种全新的玩乐方式，每一块积木，每一束光线，都承载着我们带给全球数百万家庭更多欢笑的承诺。

我们相信，积木有灯，生活有光，让Lumibricks与你一起，拼搭出更多乐趣，创造属于你的灯光宇宙。

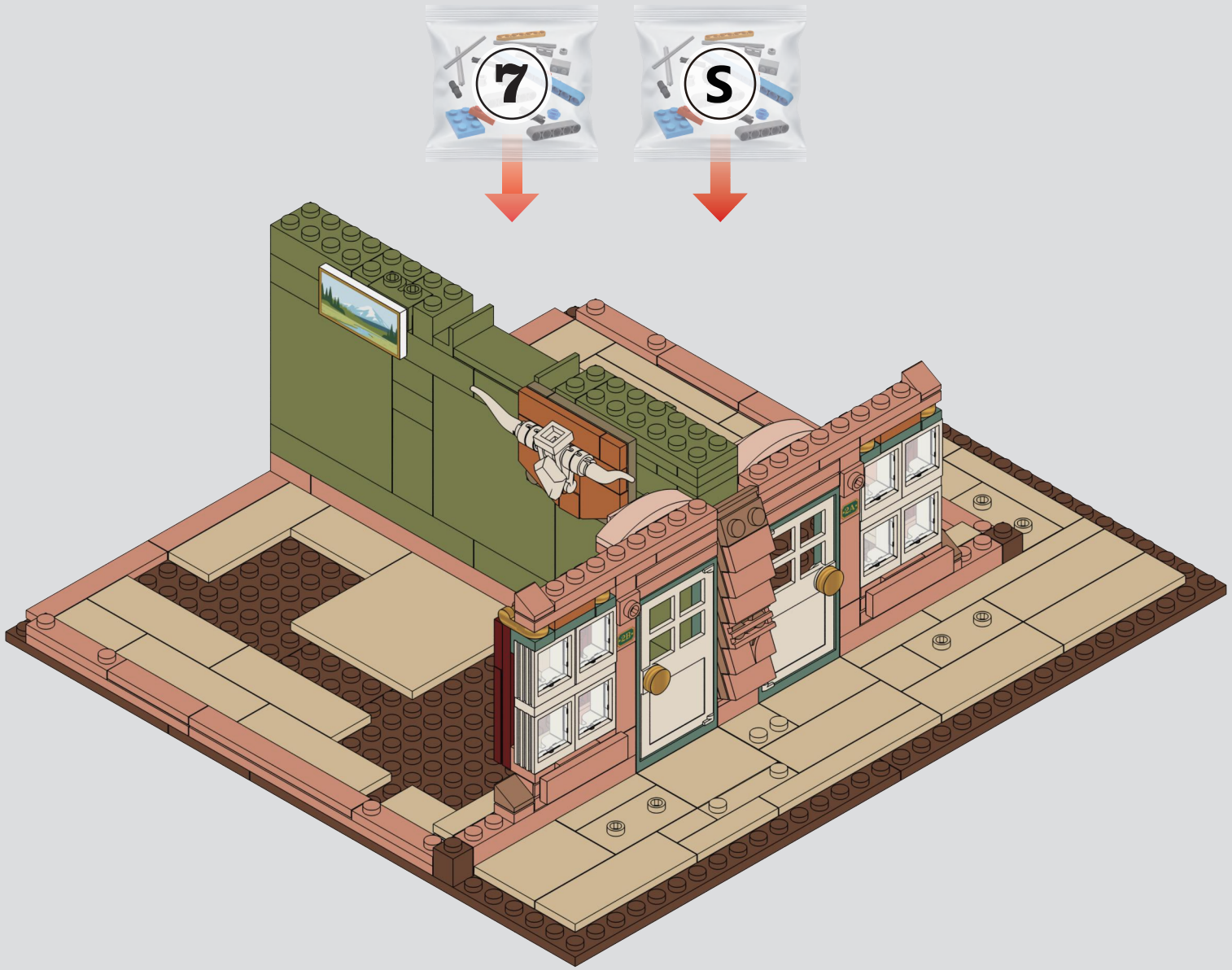
7
S

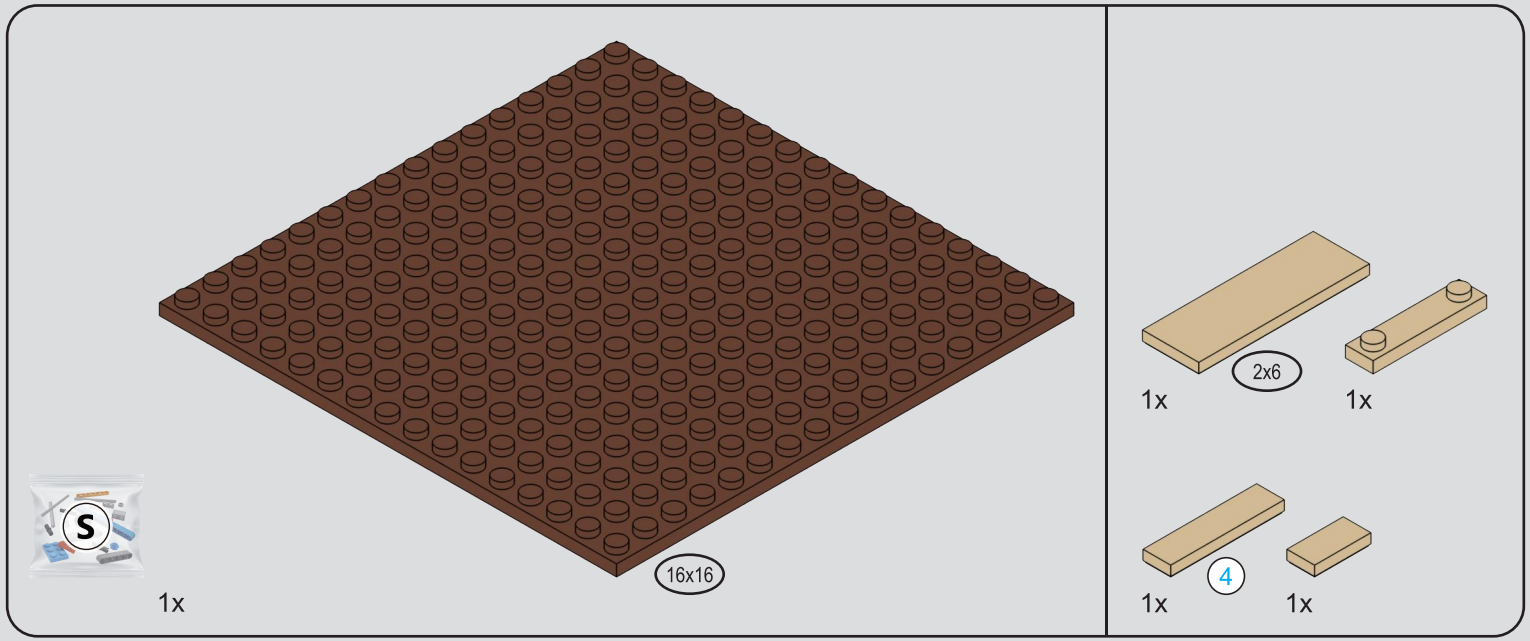



1

1

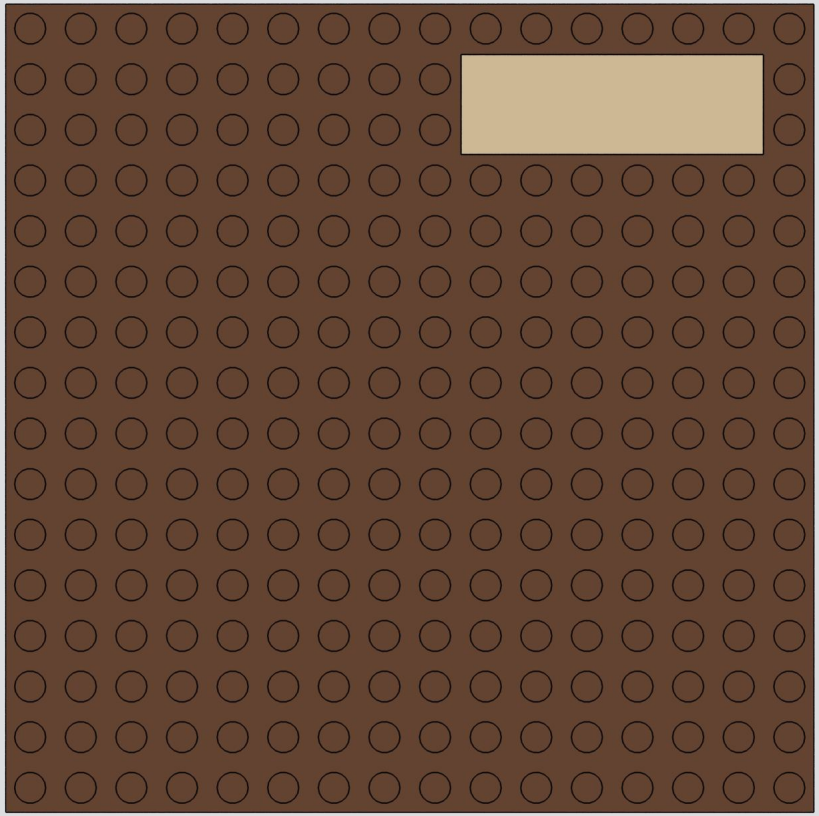

2

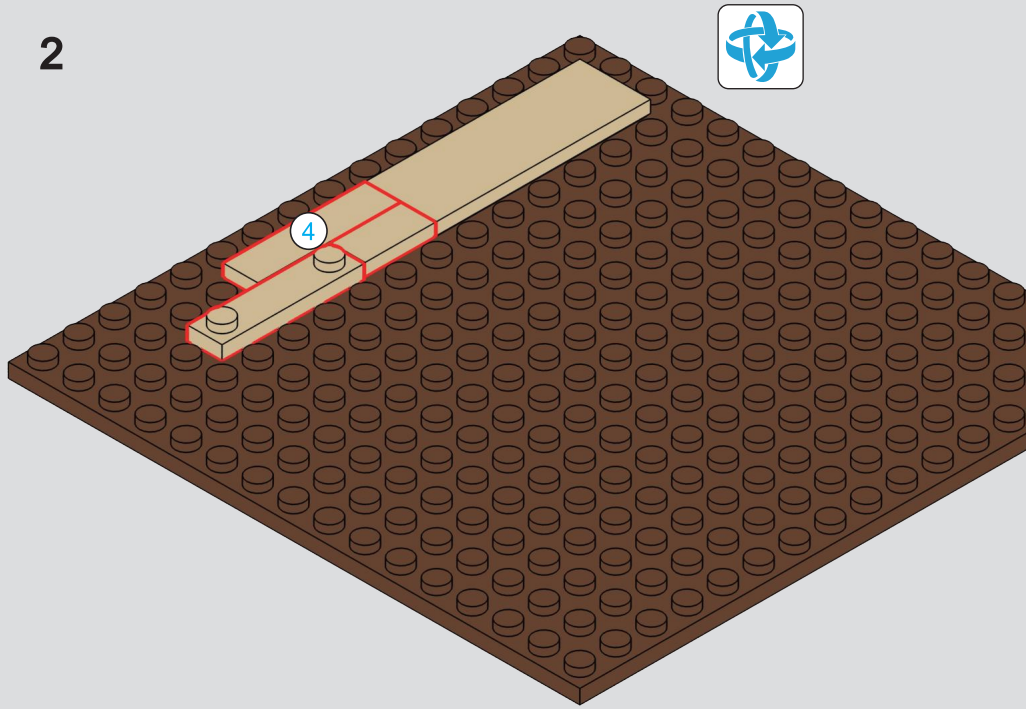

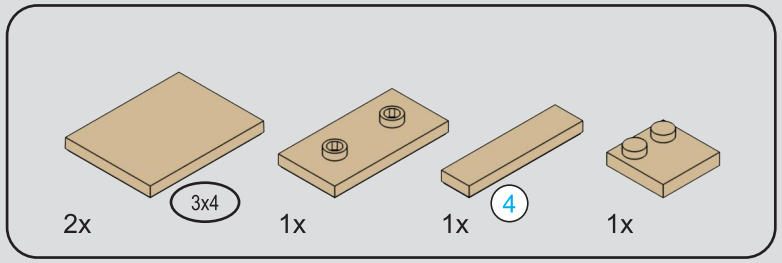

2

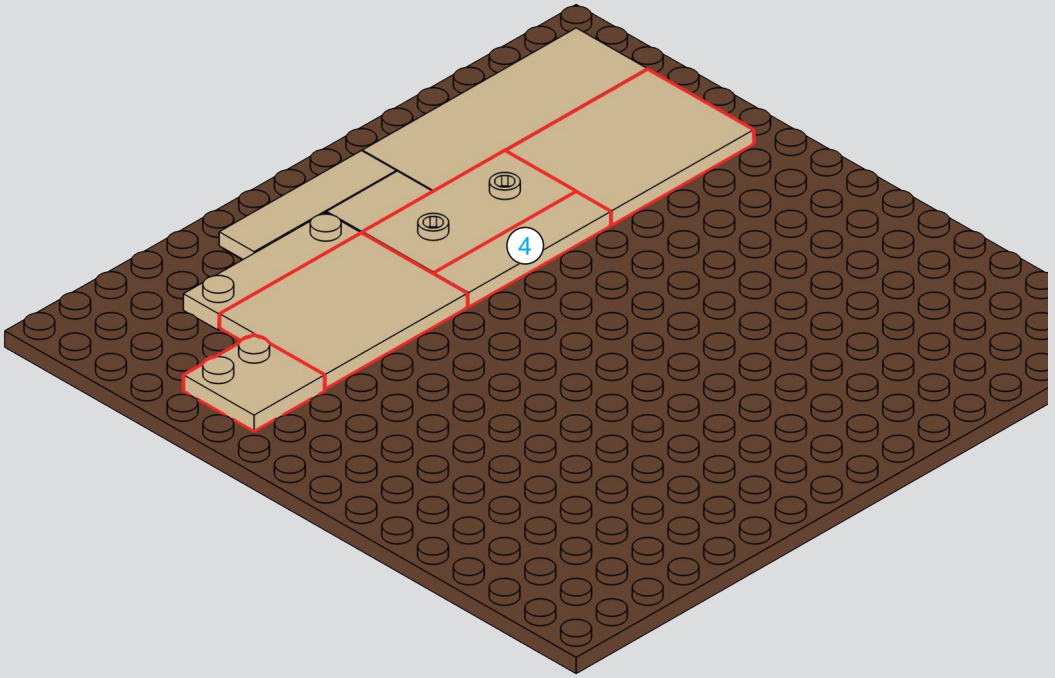



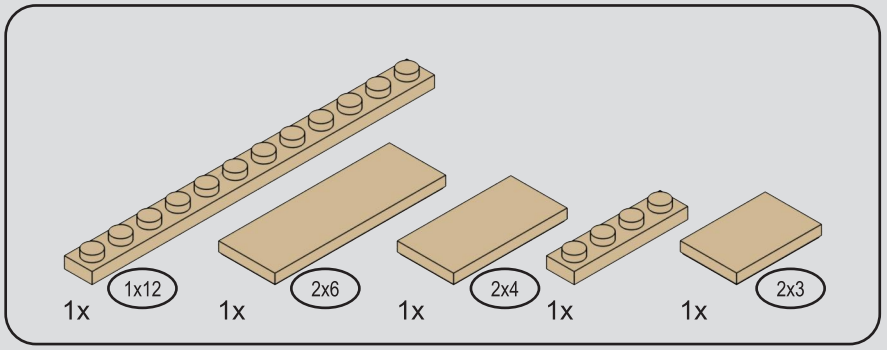

3

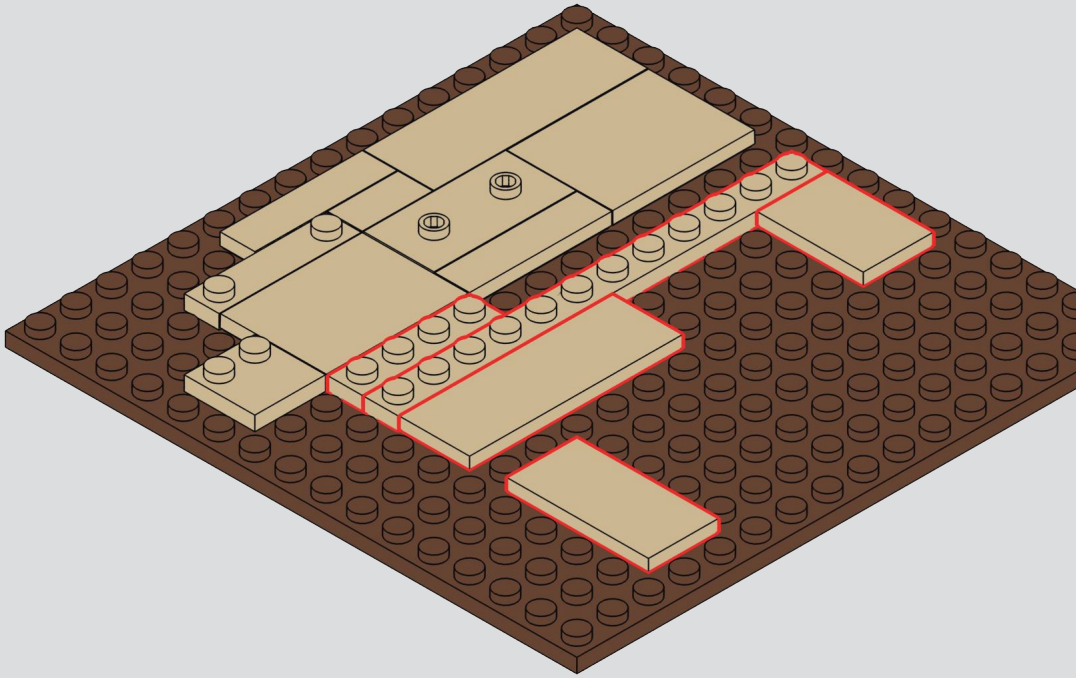

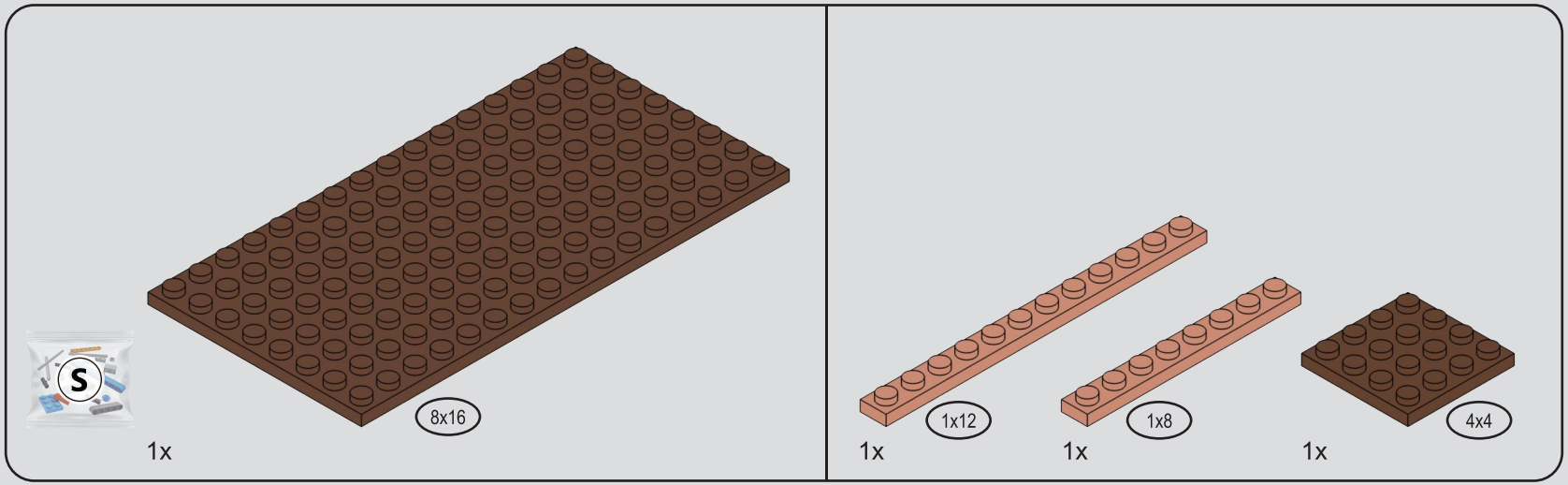

4

1

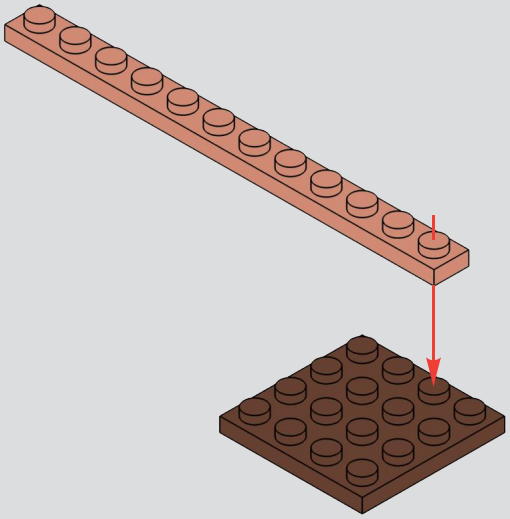

2

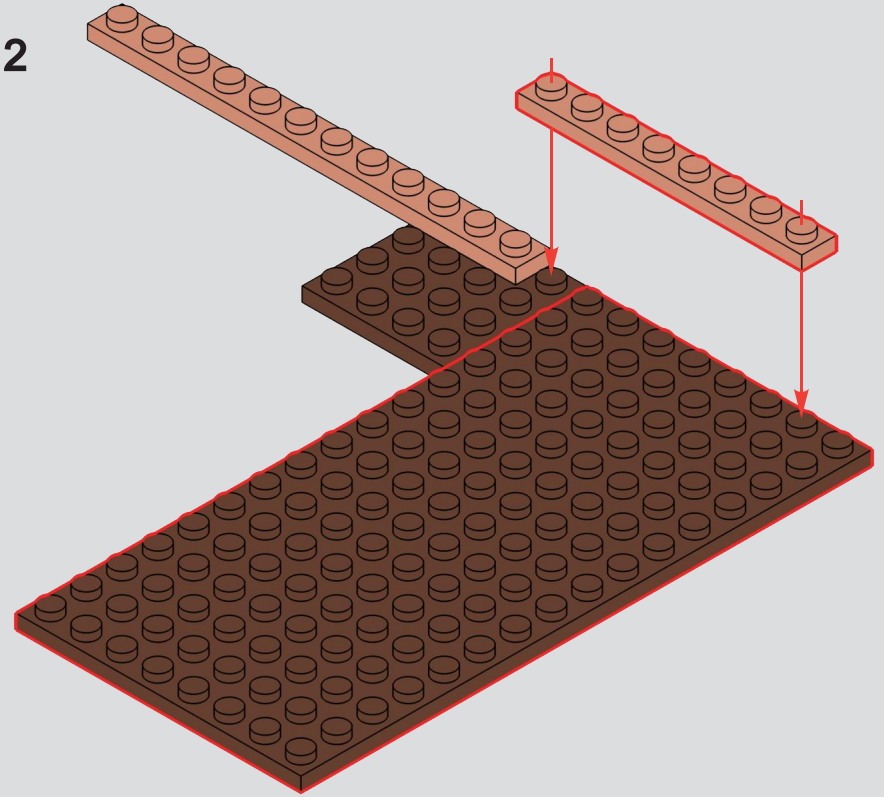

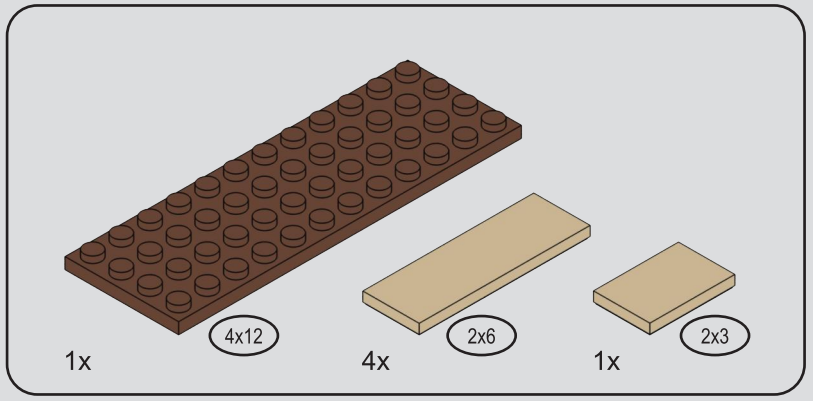

5

1

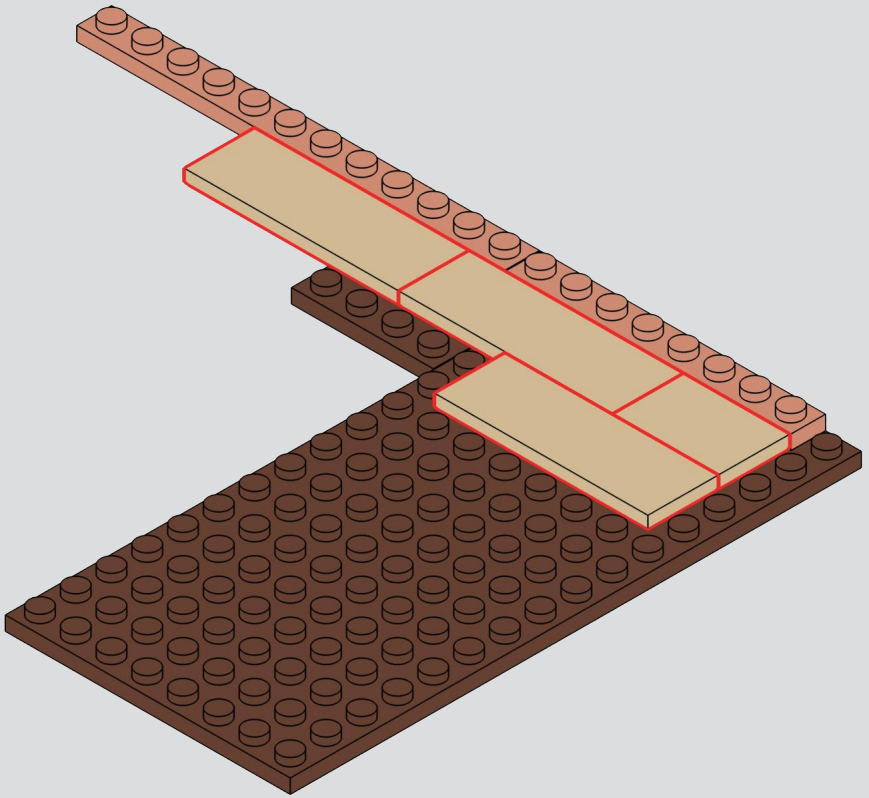

2

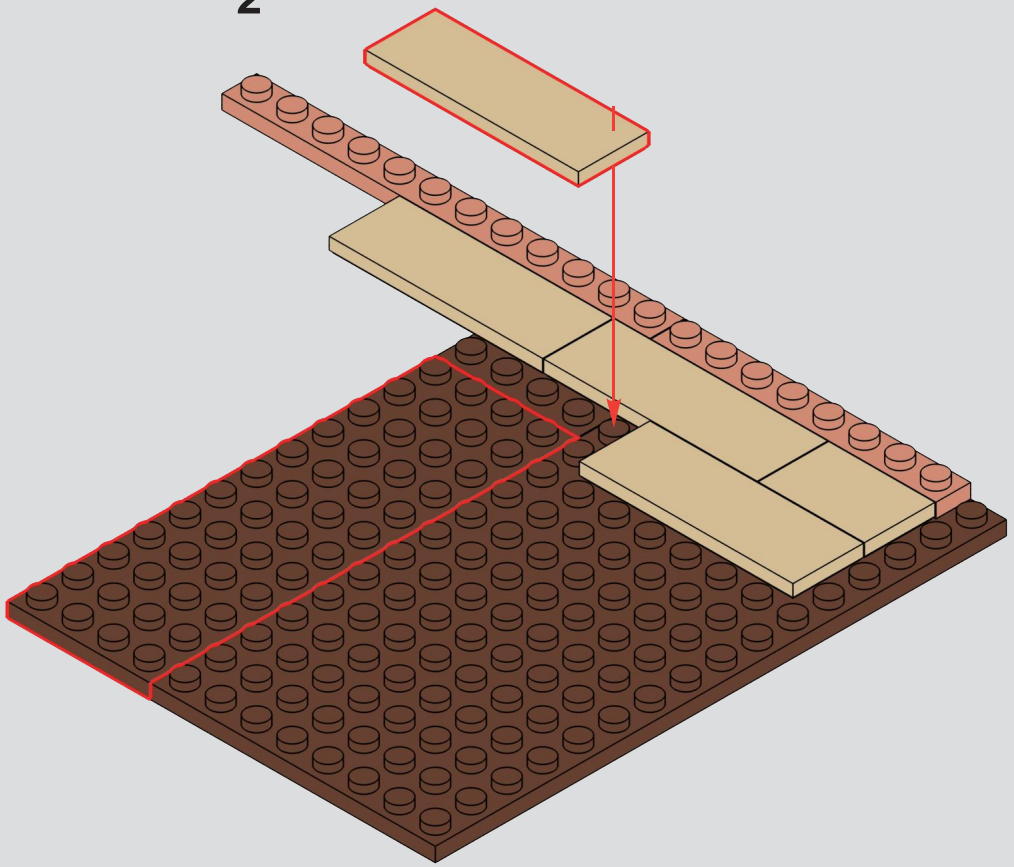

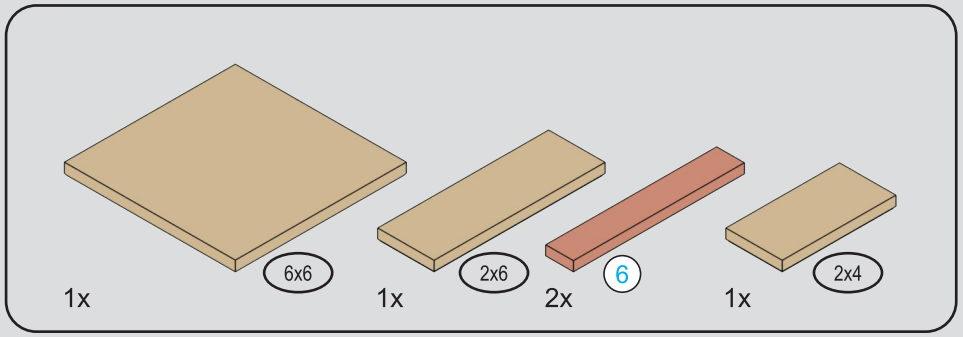

6

1

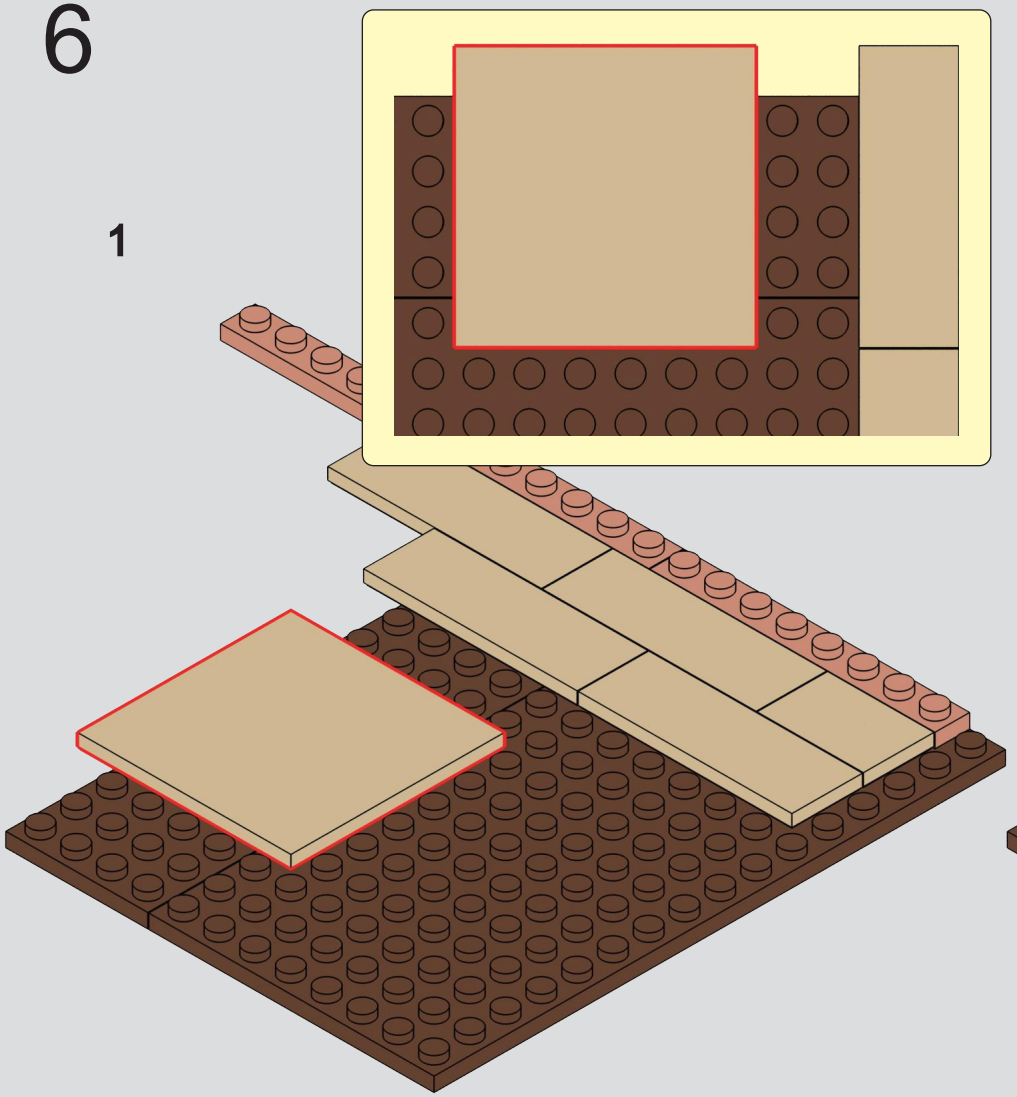

2

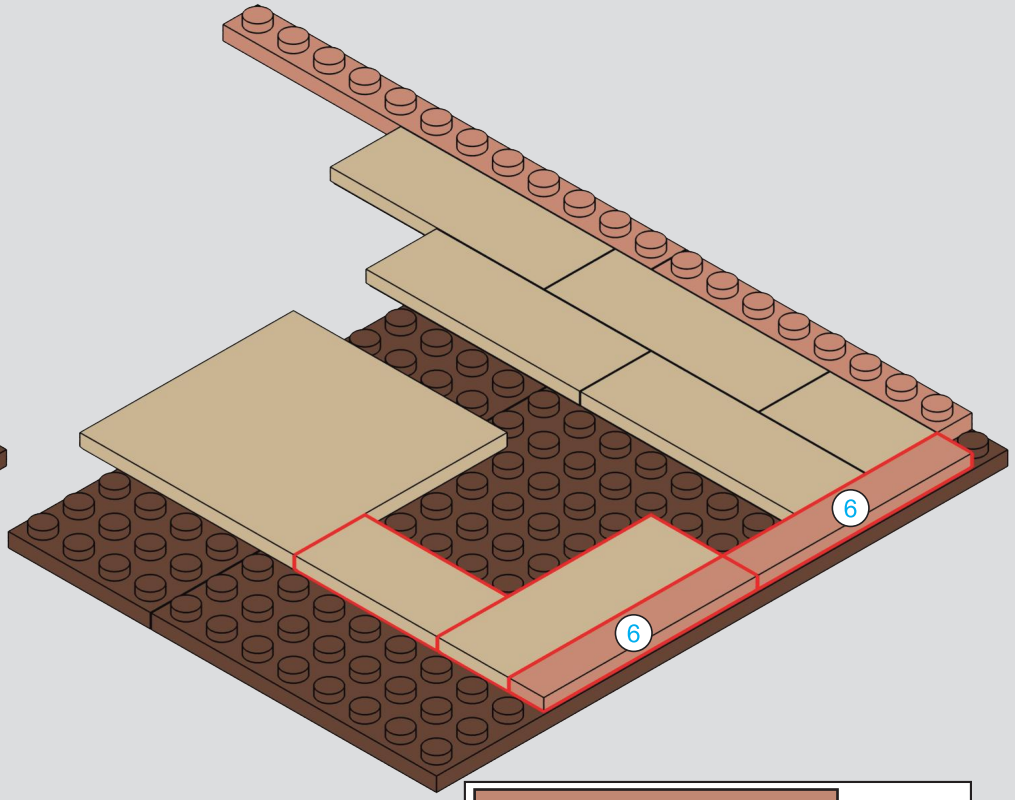



7

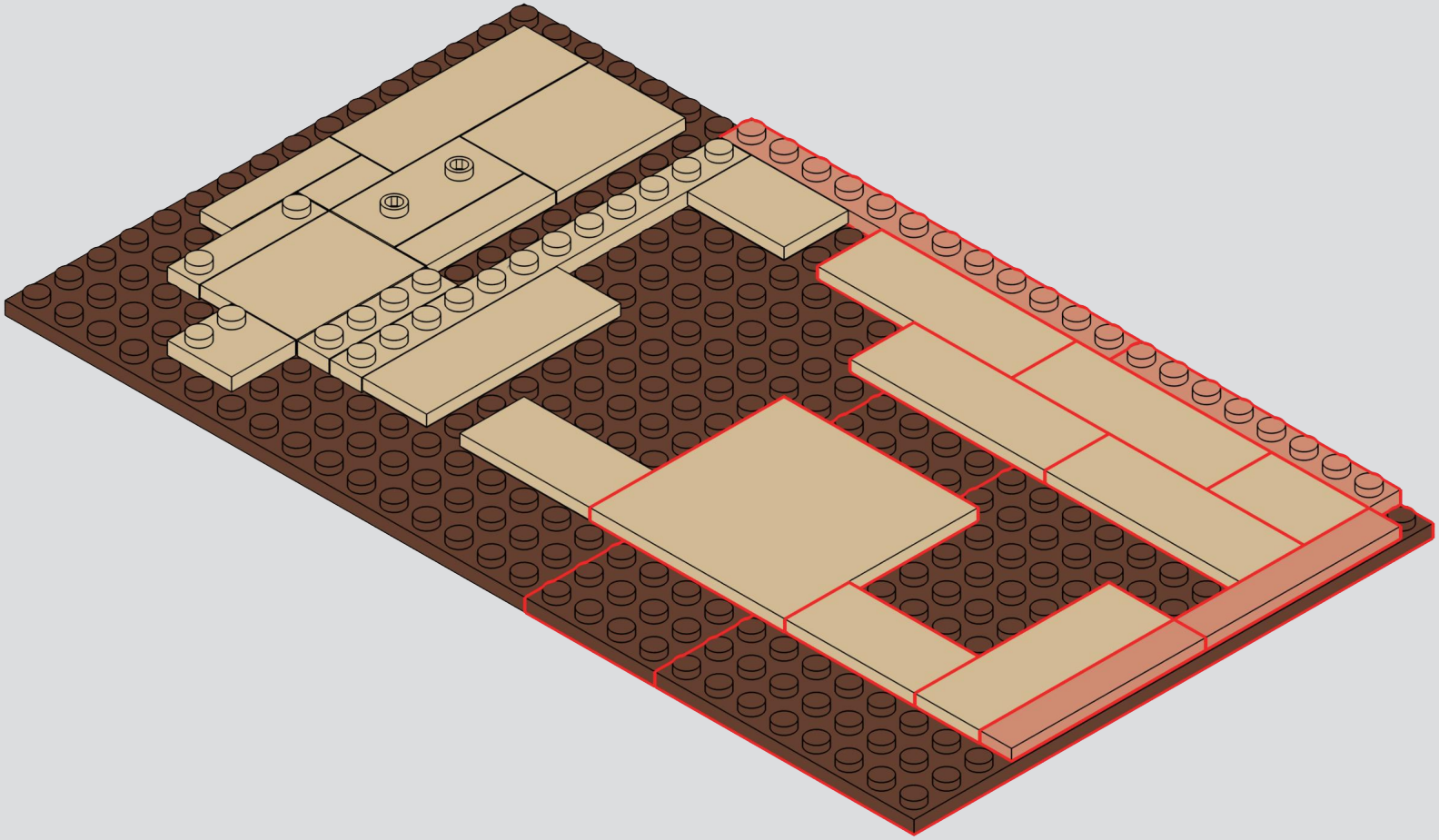

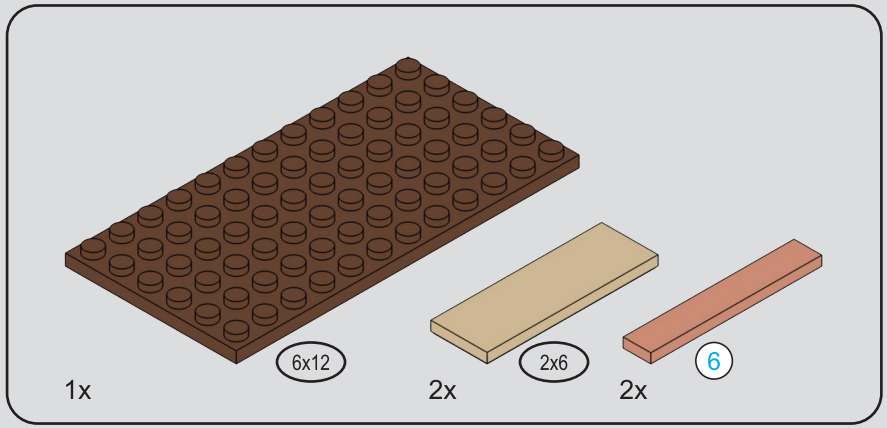



8

1

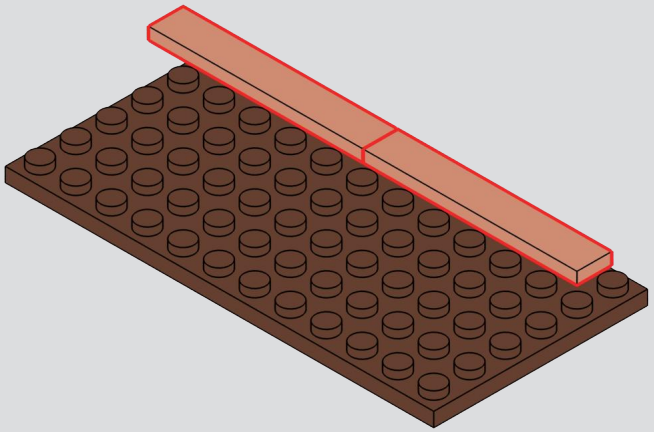

2

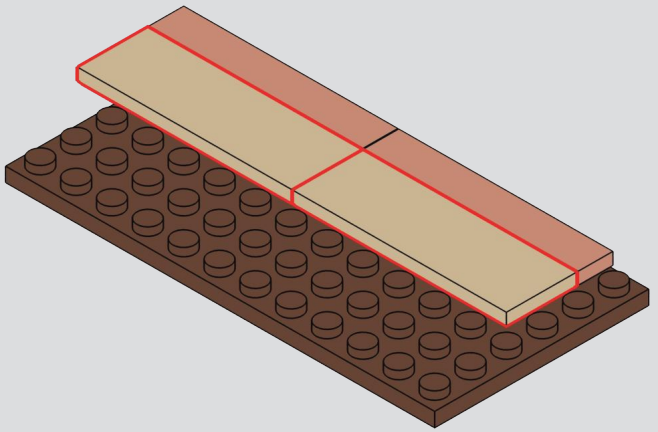

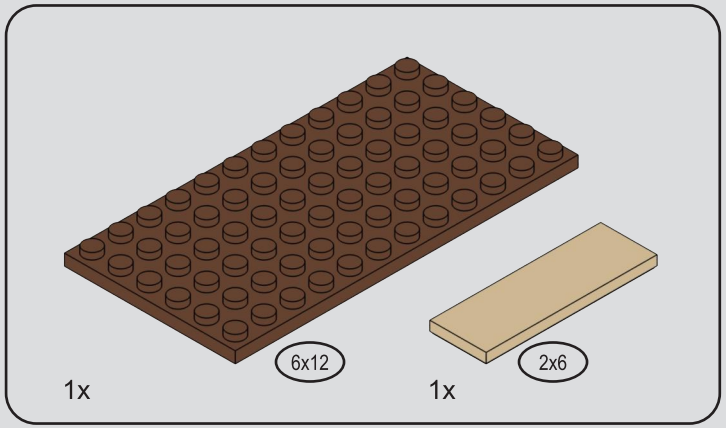

9

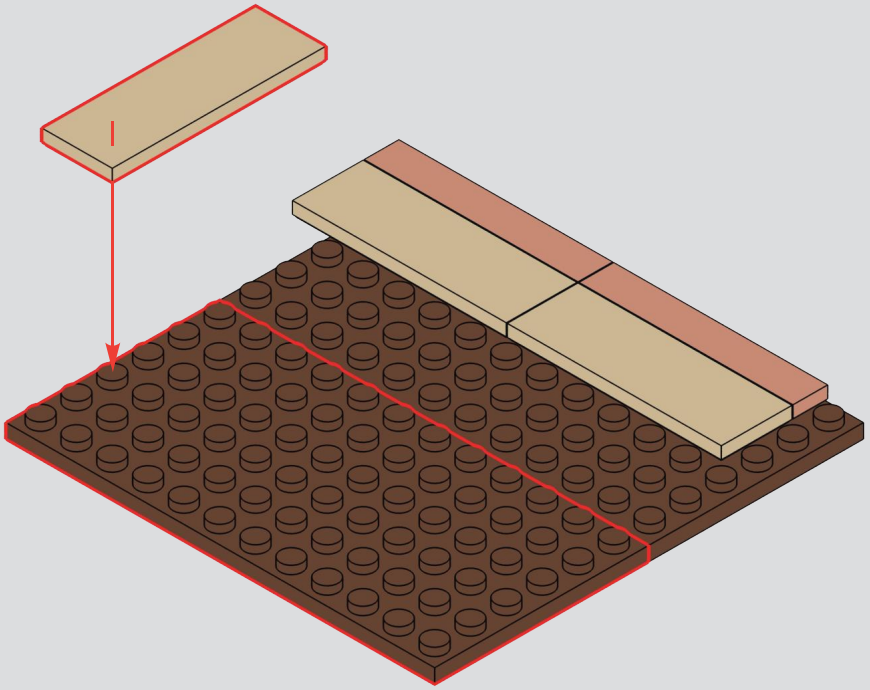

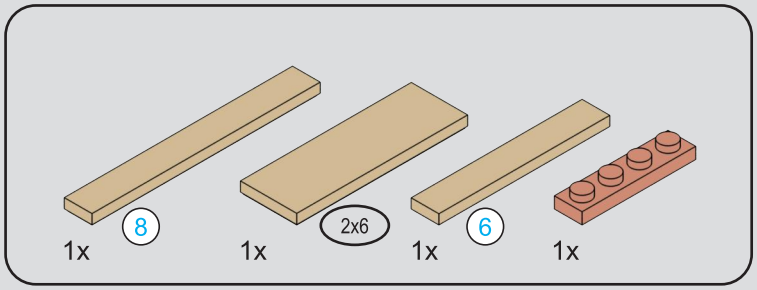

10

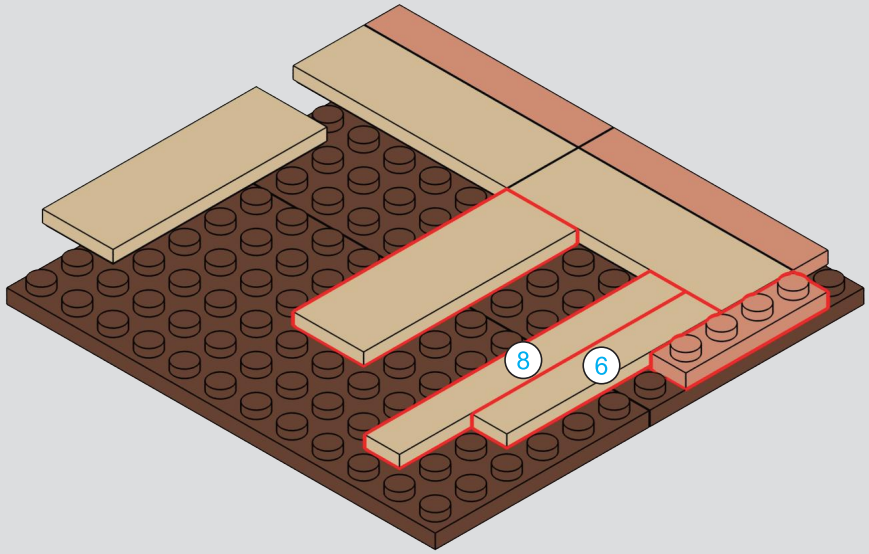





11

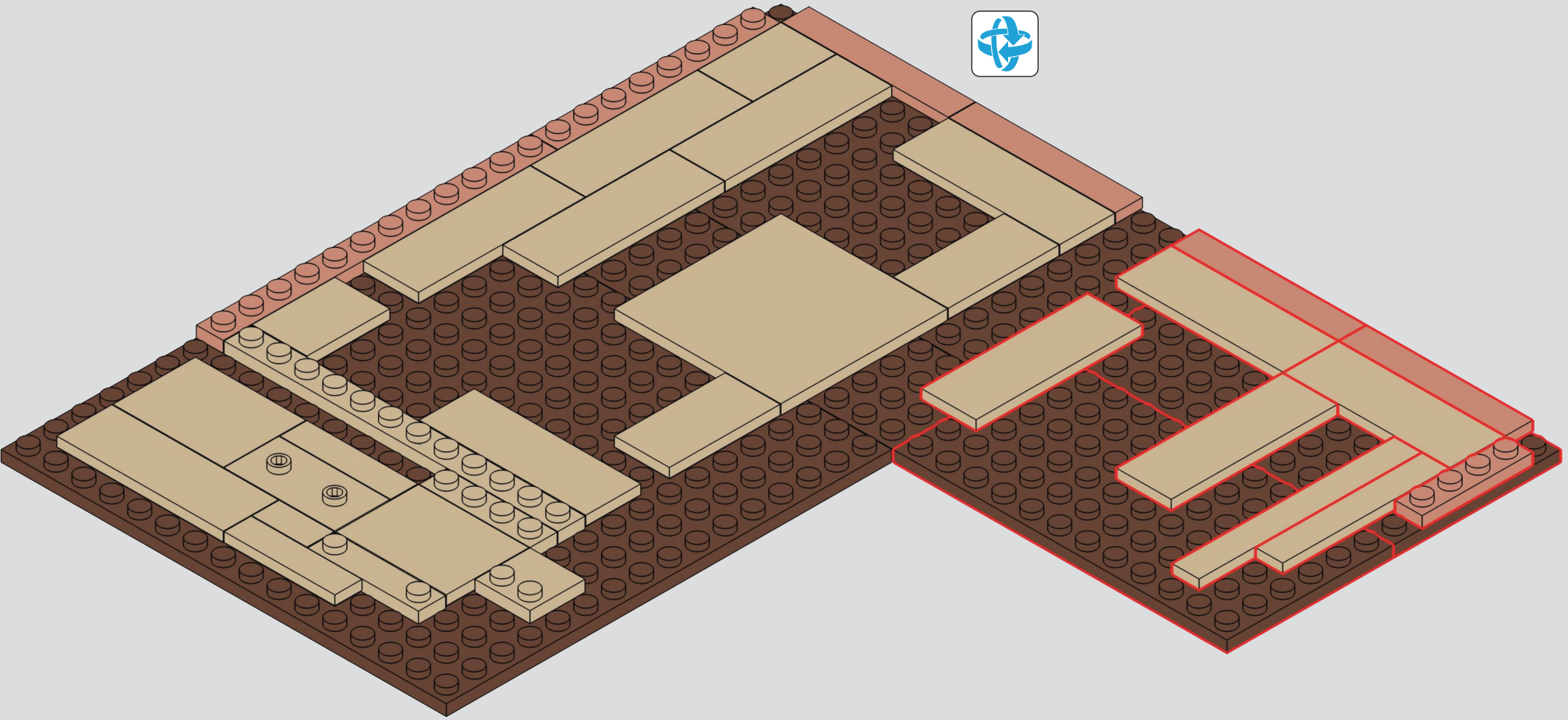

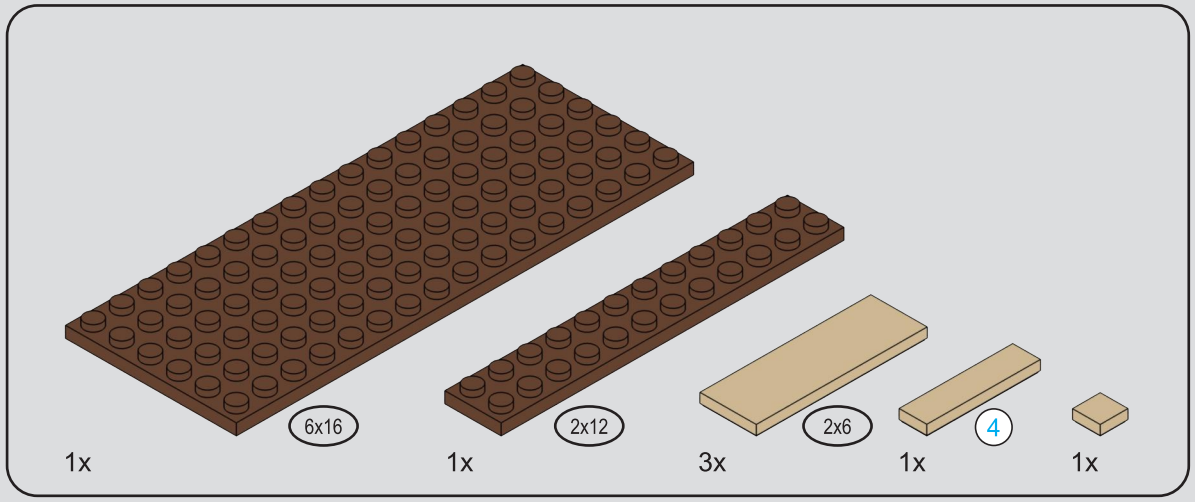



12

1

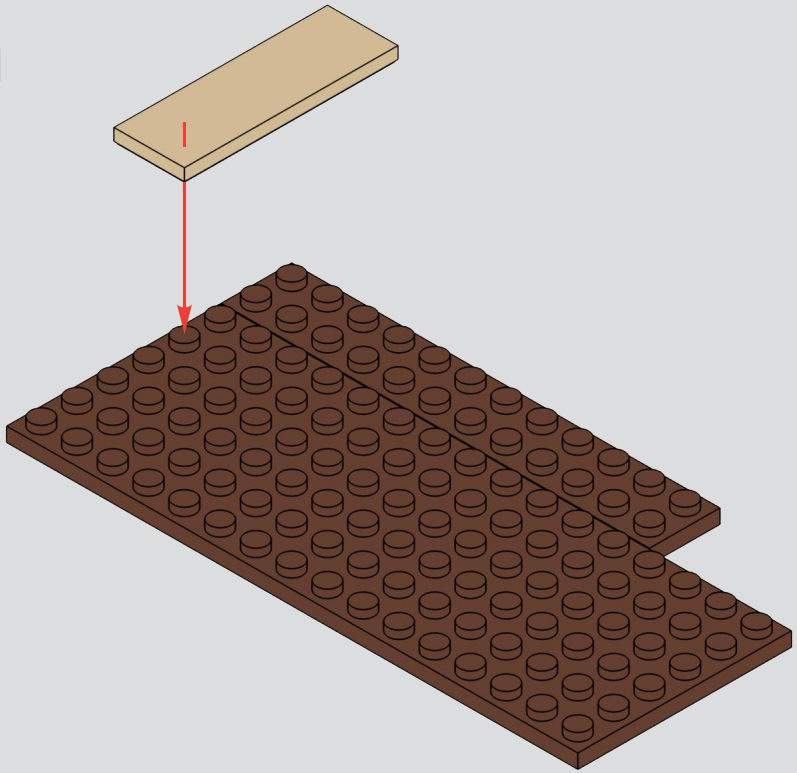

2

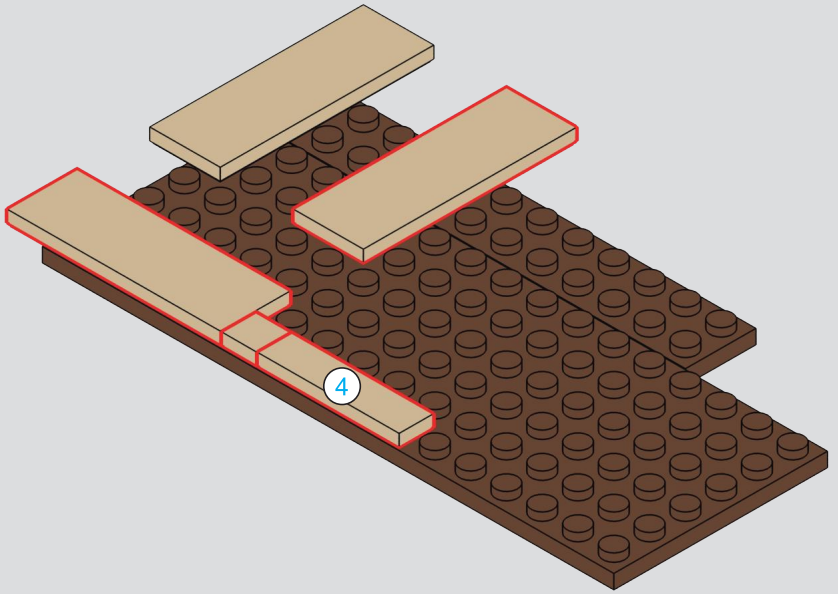

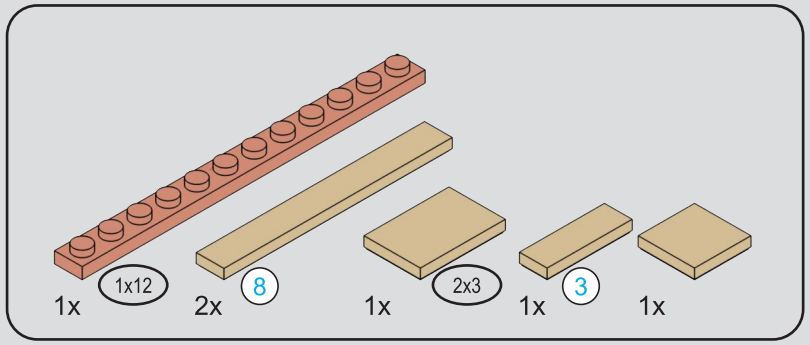

13

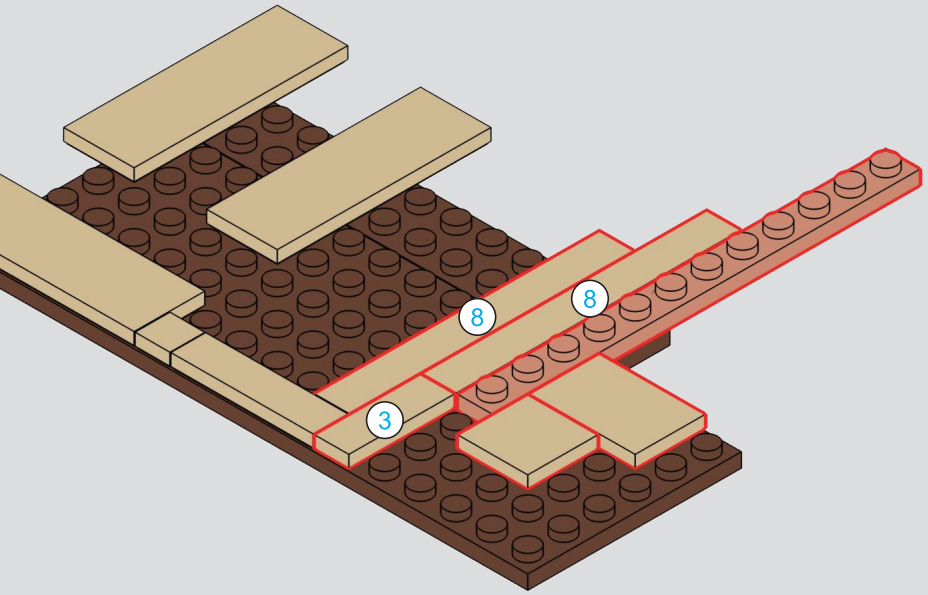



14

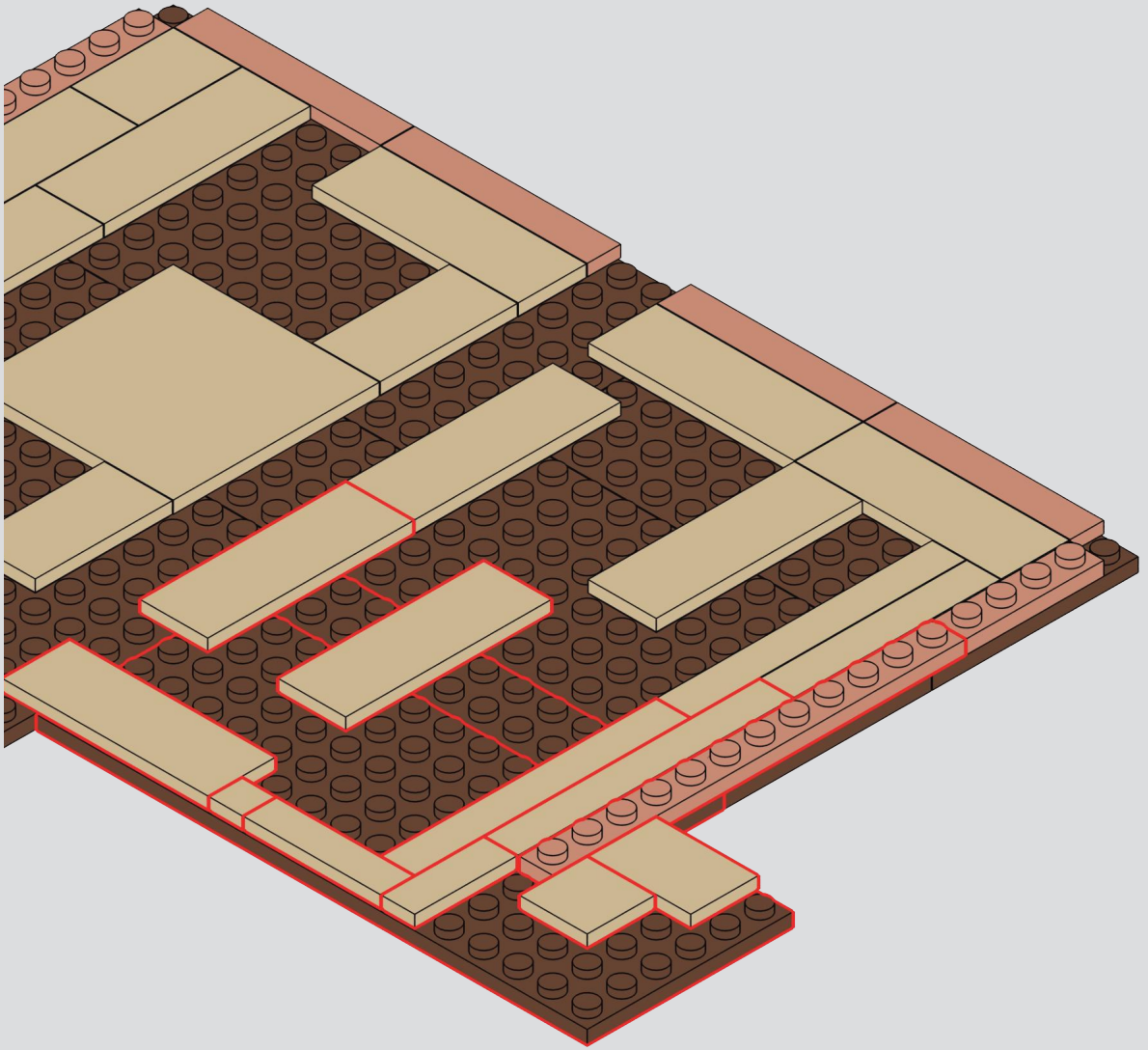

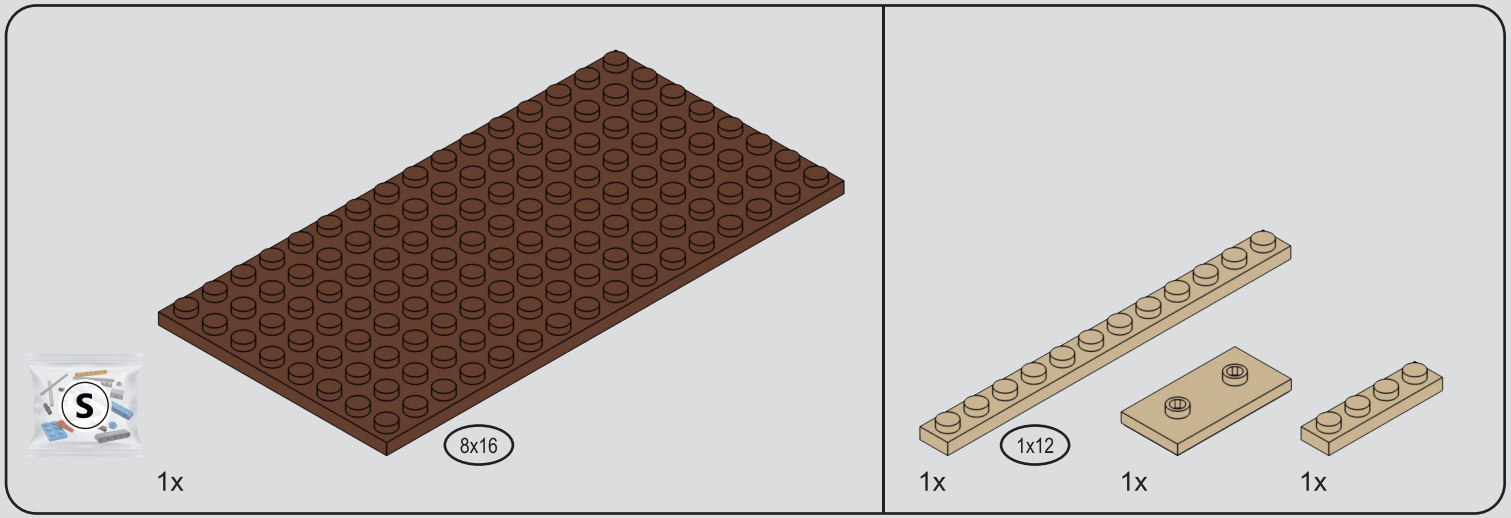

15

1

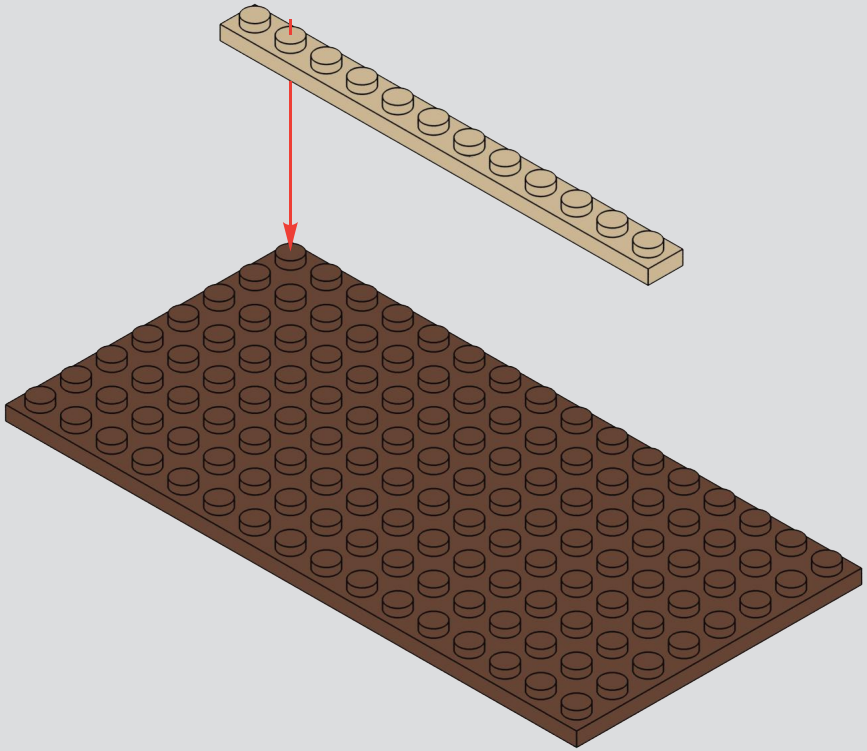

2

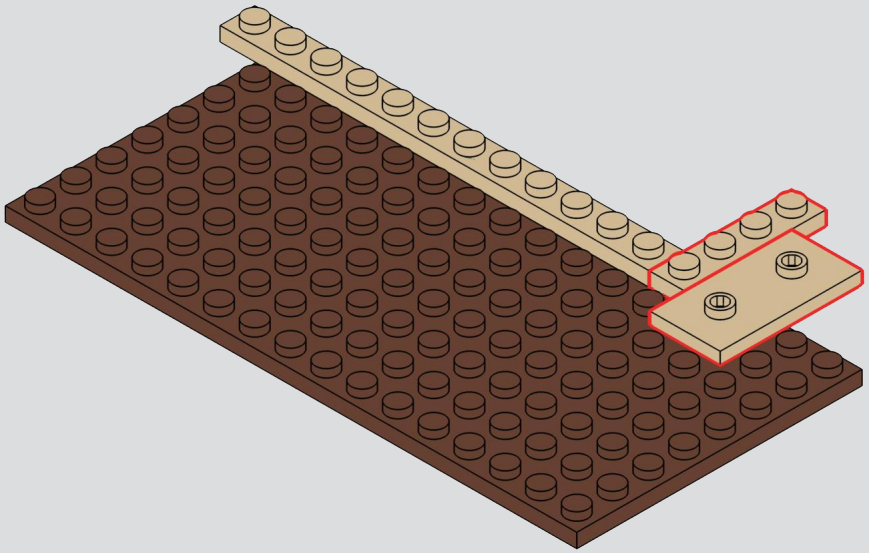

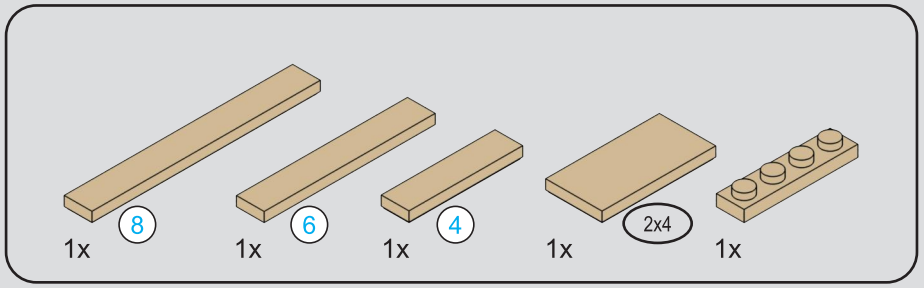

16

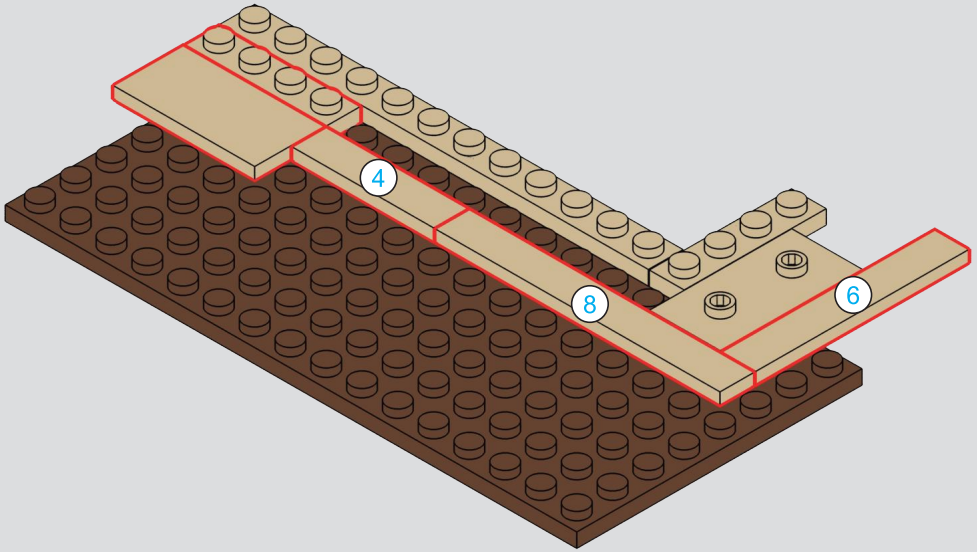



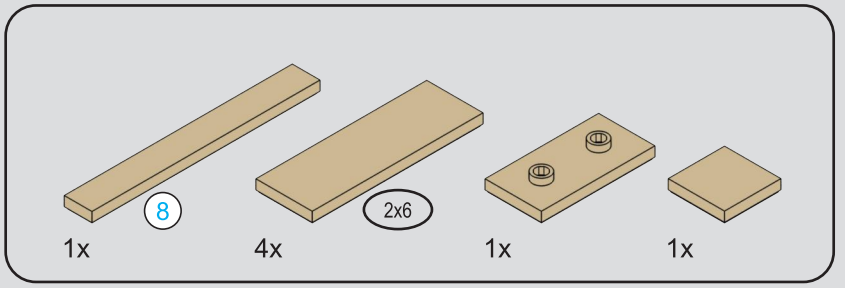

17

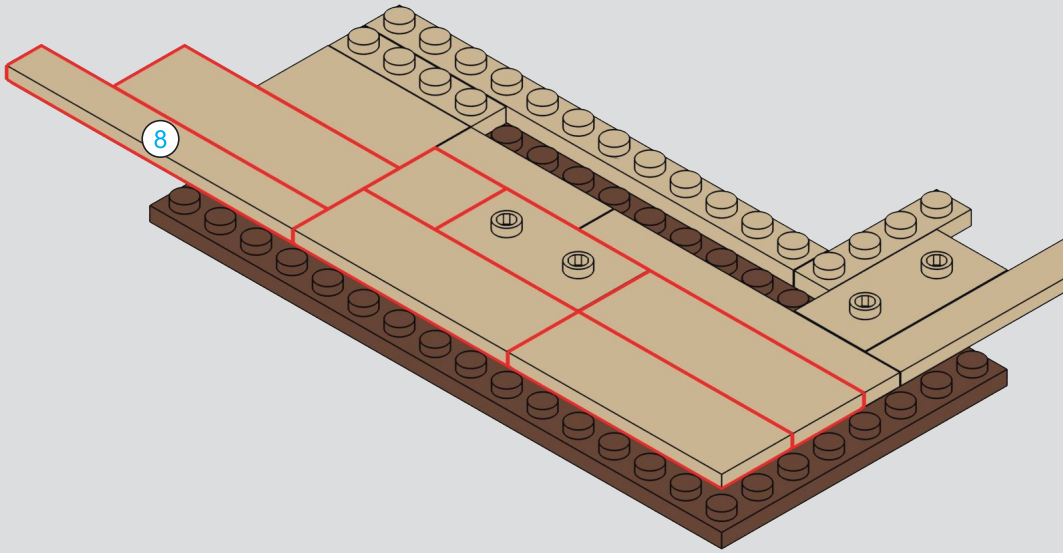



18

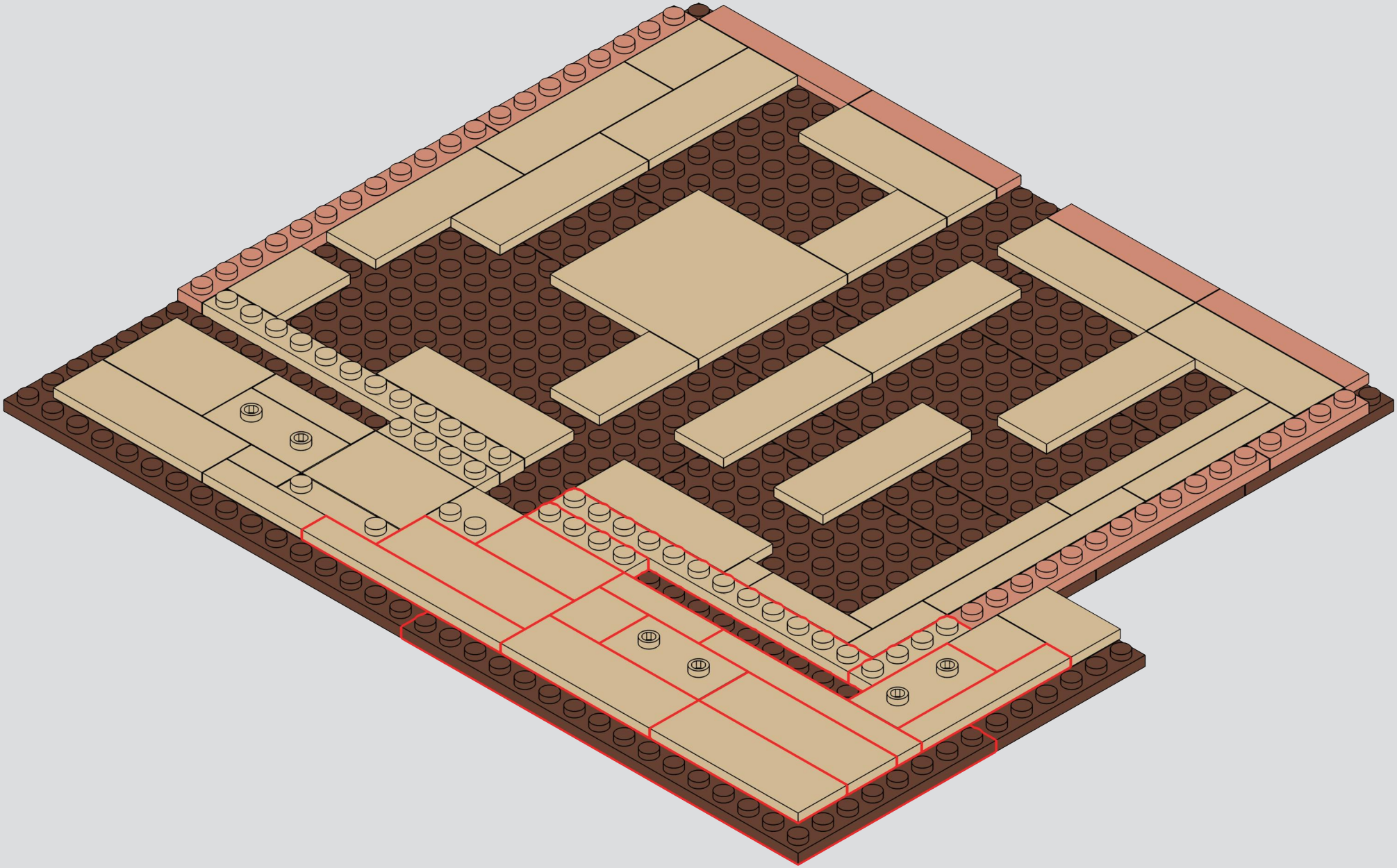

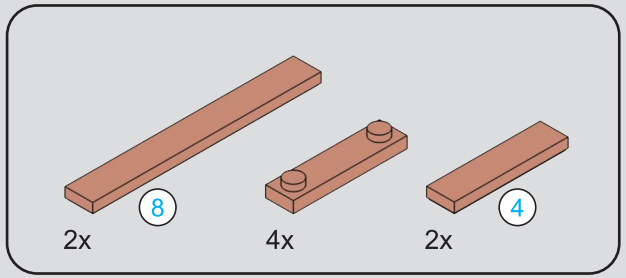





19

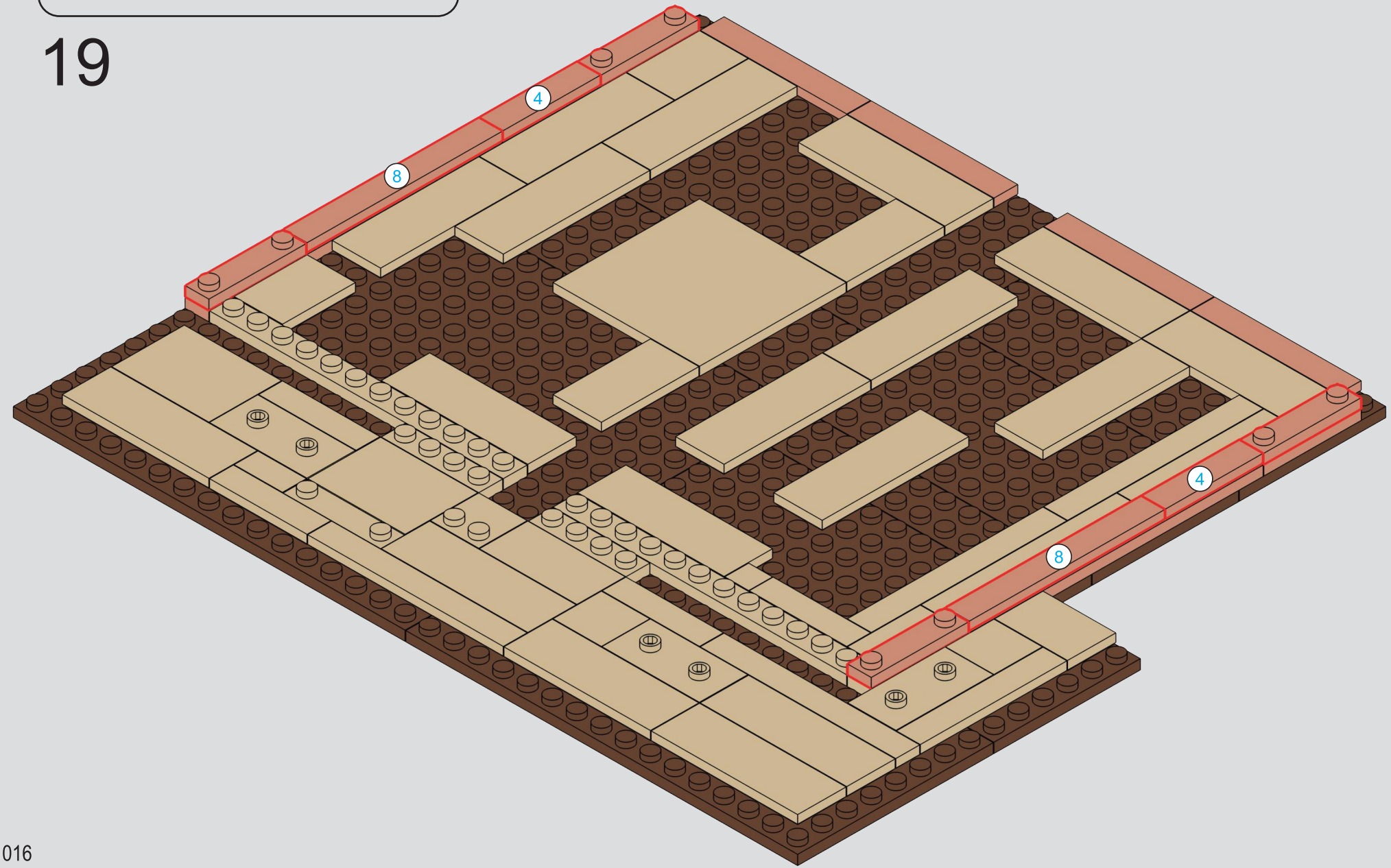

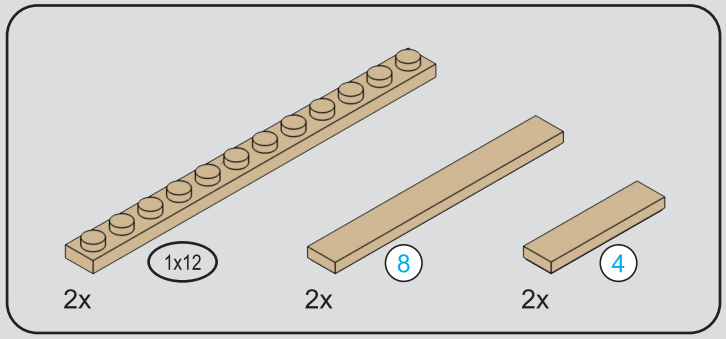





20

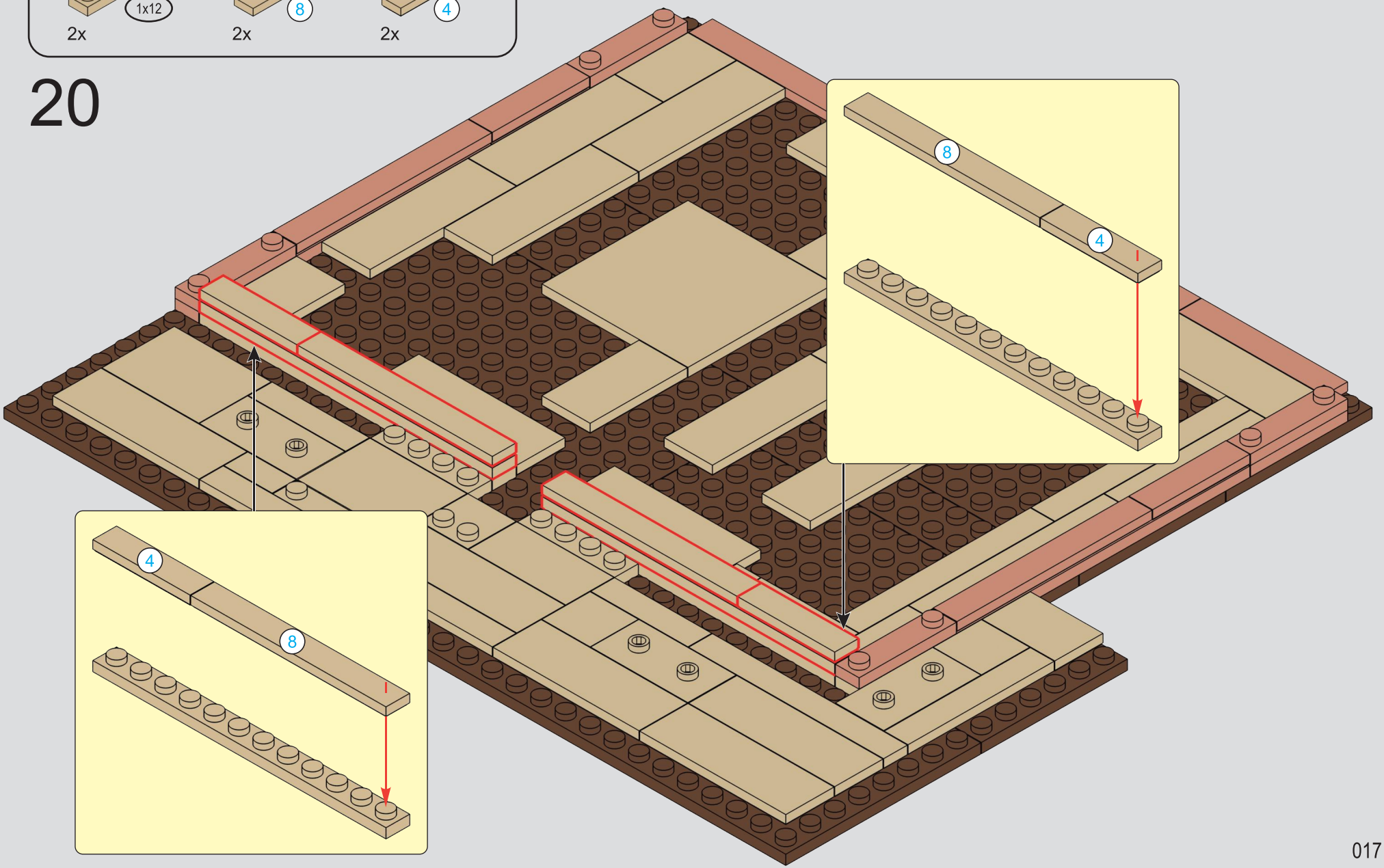

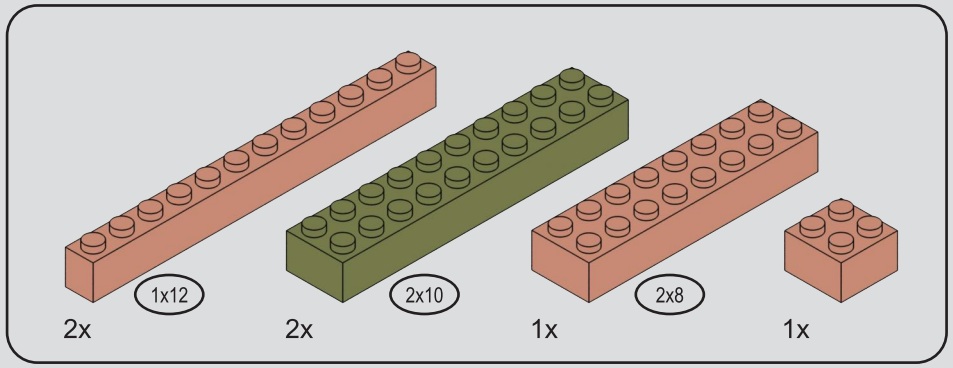

21

1

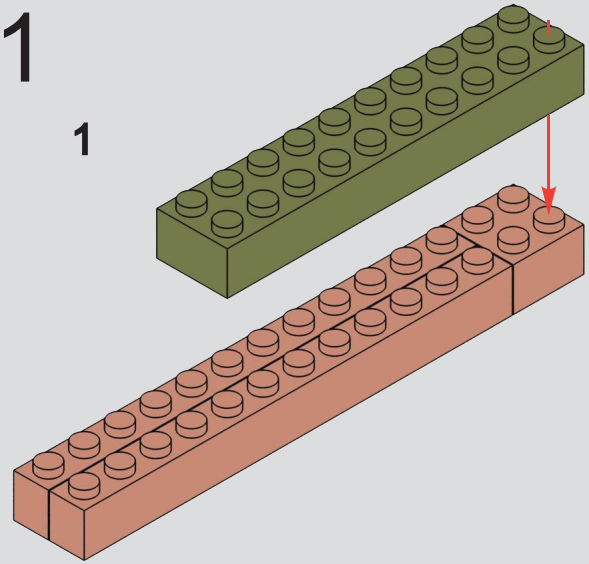

2

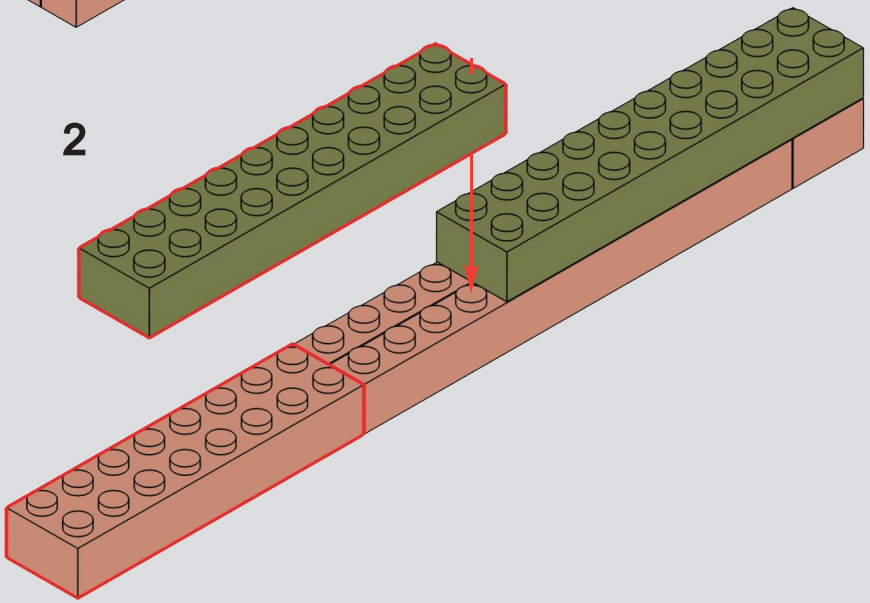

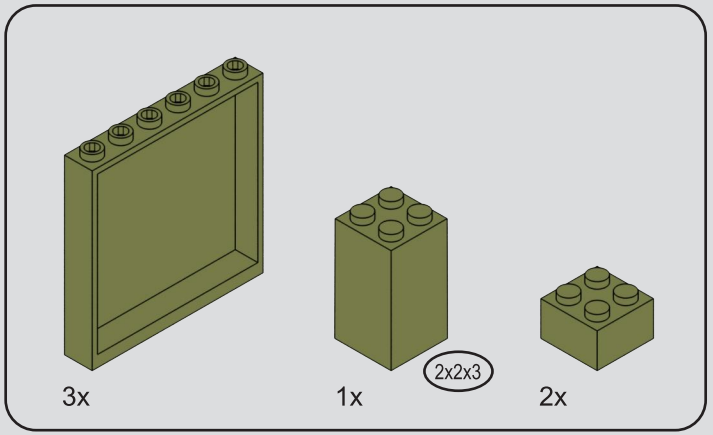

22

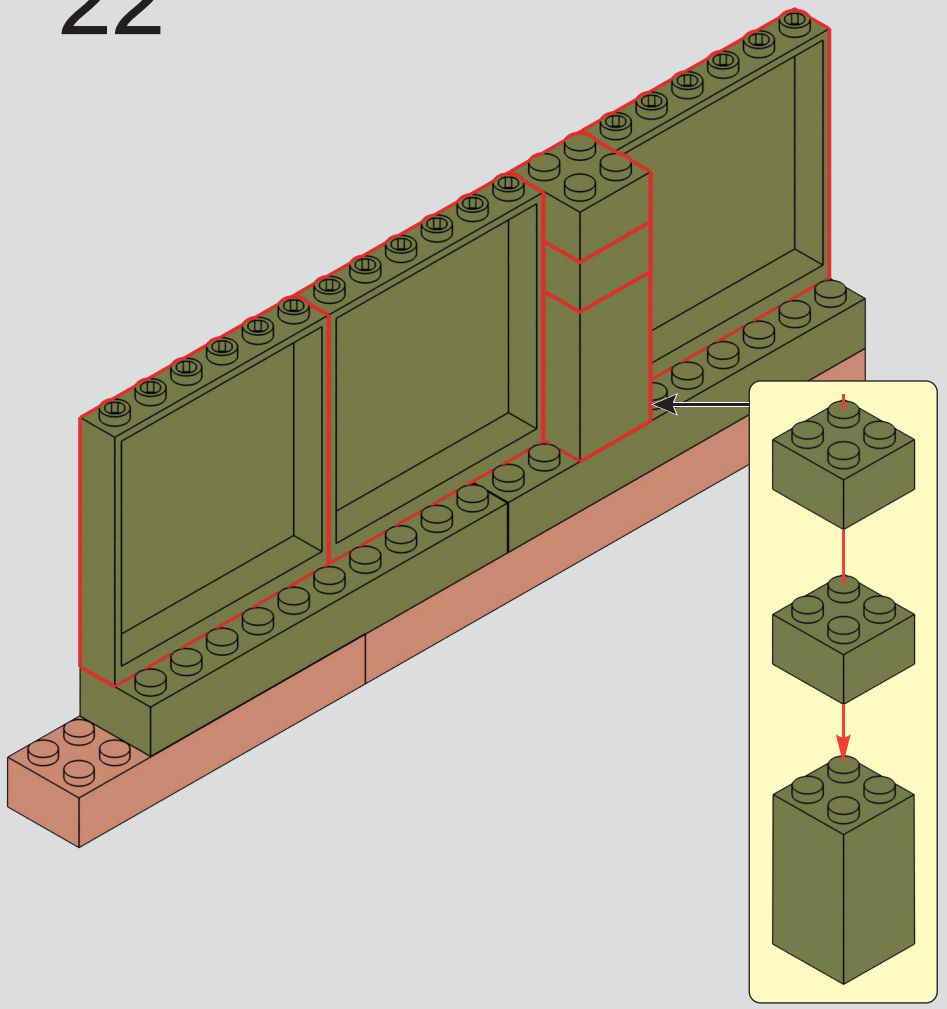

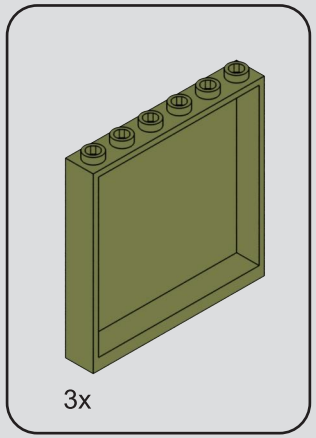

23

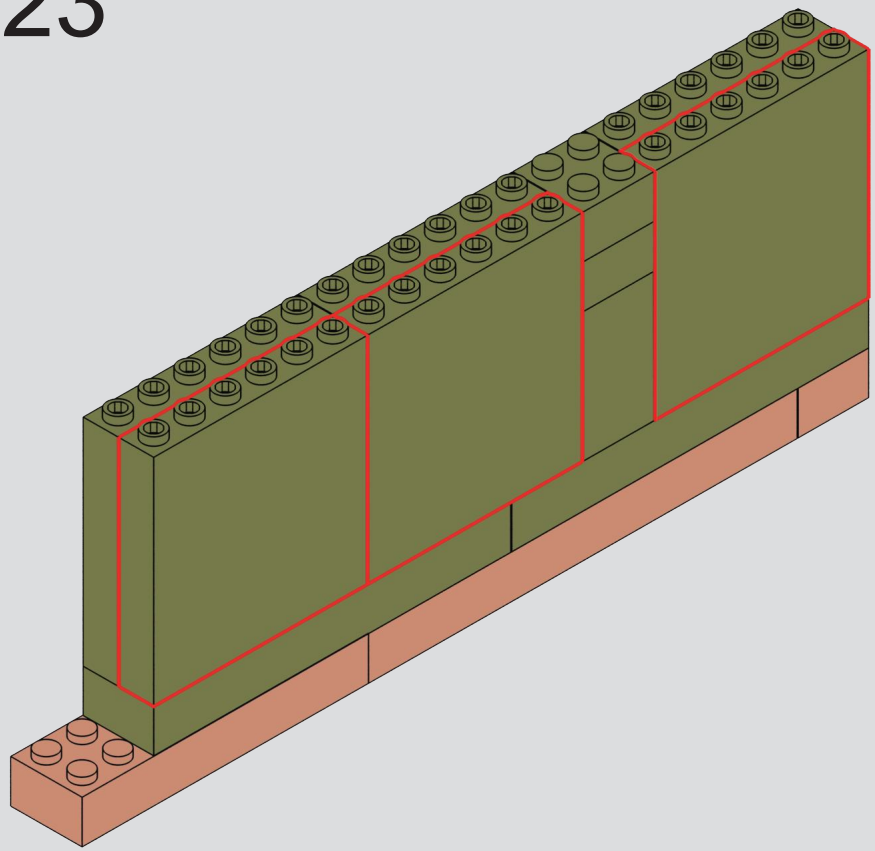

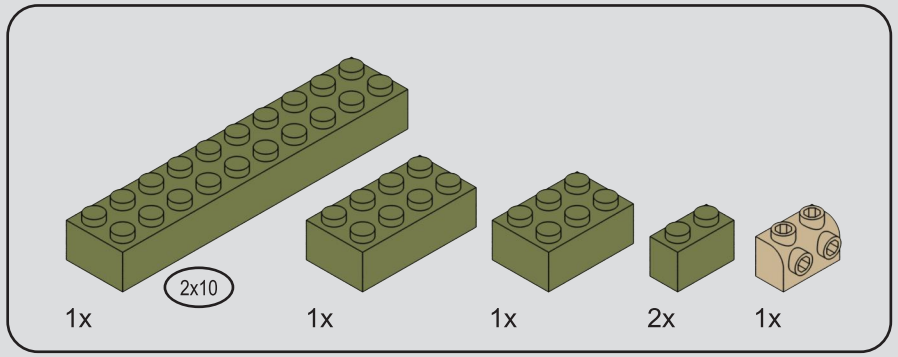

24

1

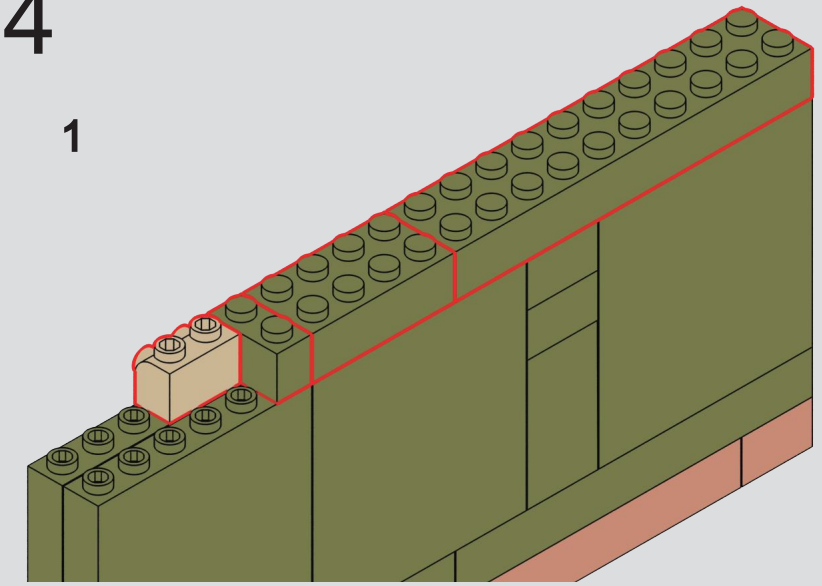

2

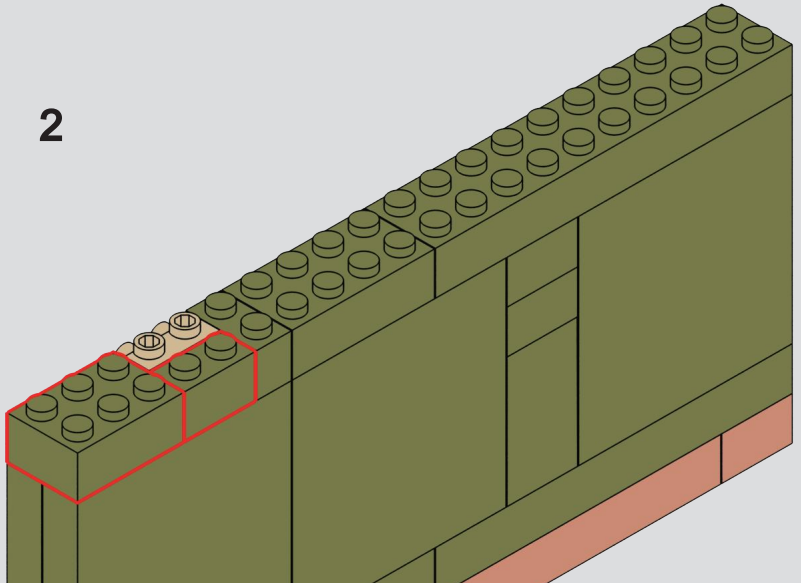

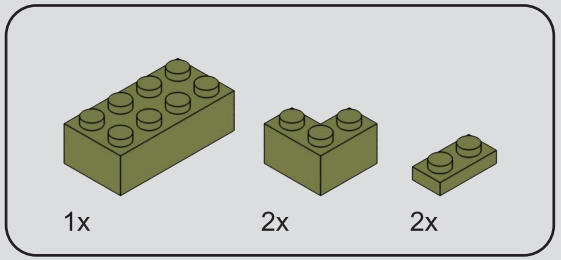

25

1

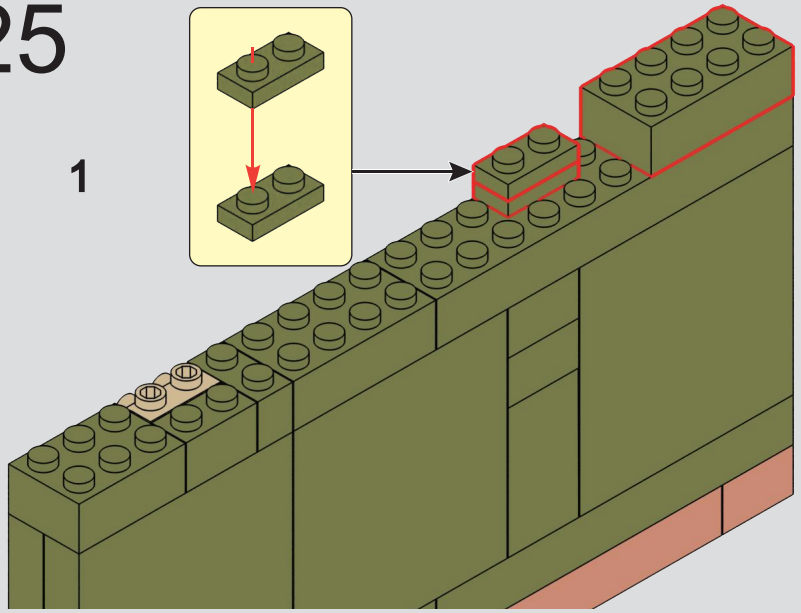

2

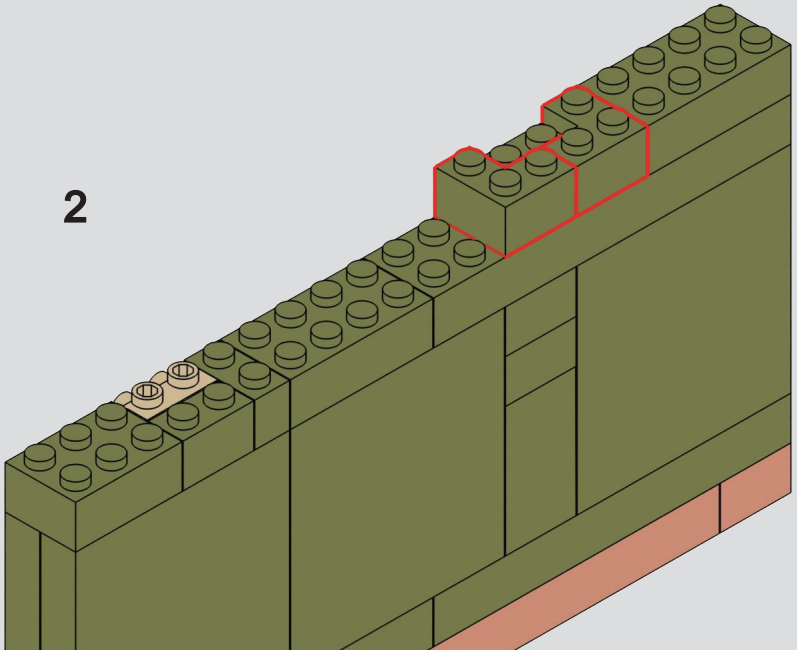

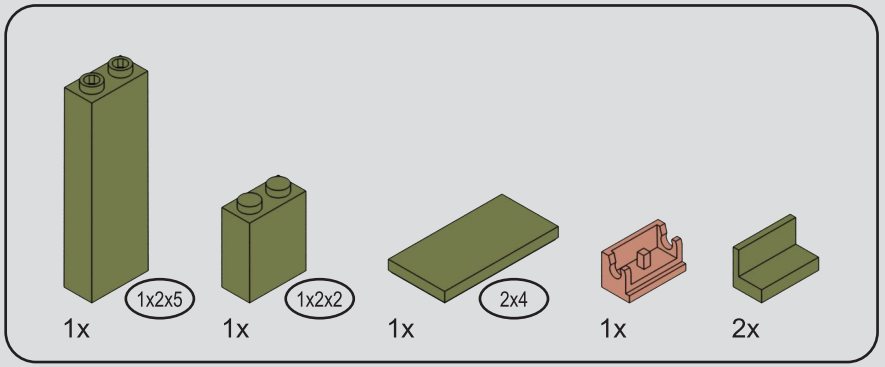

26

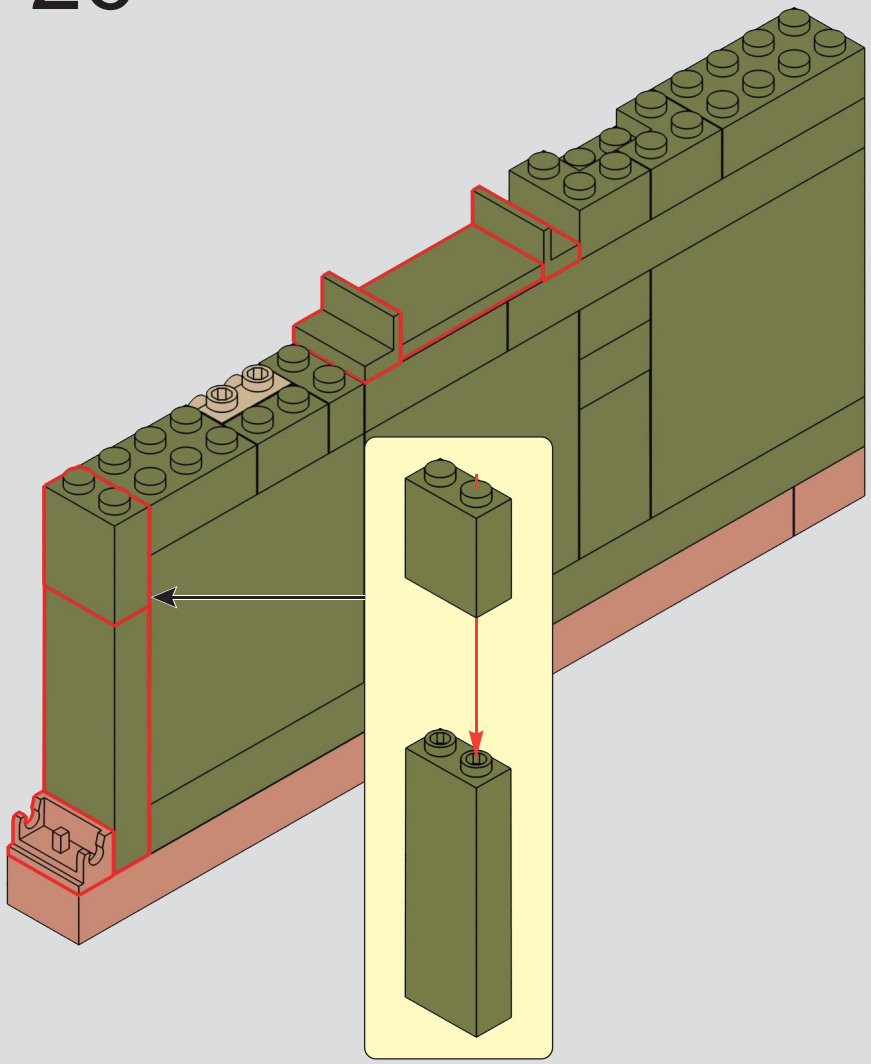

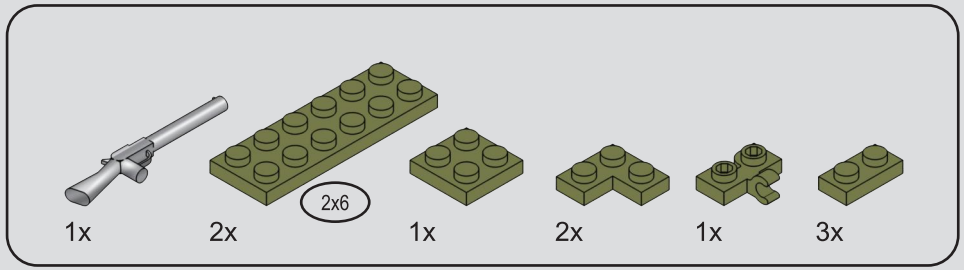

27

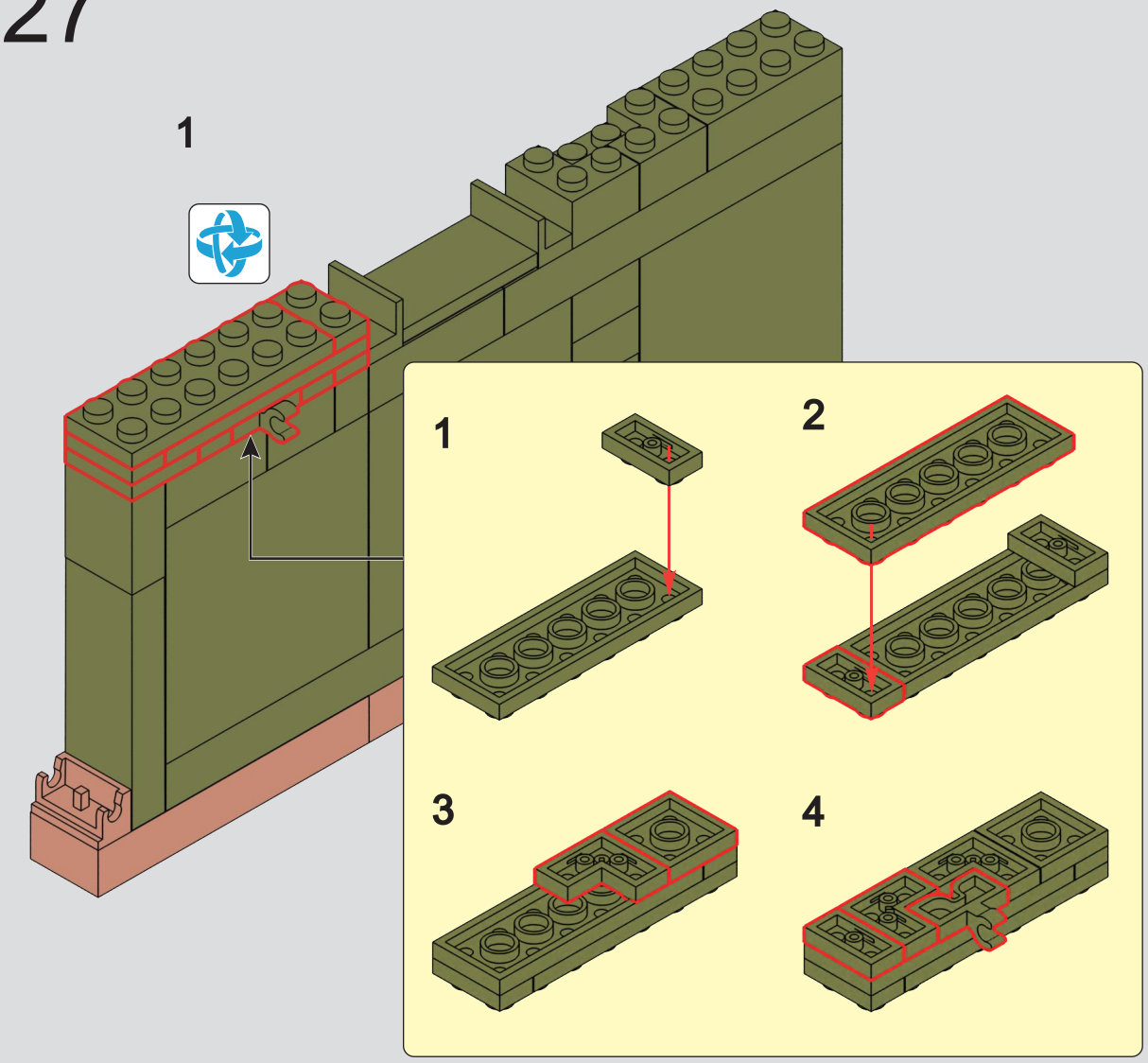

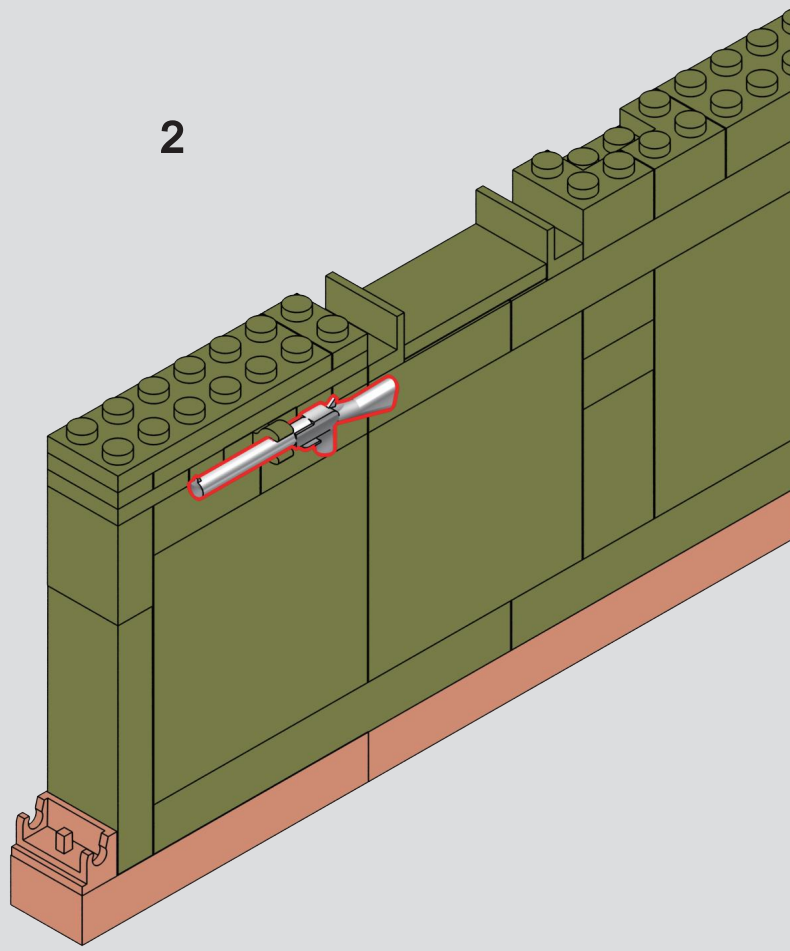

28

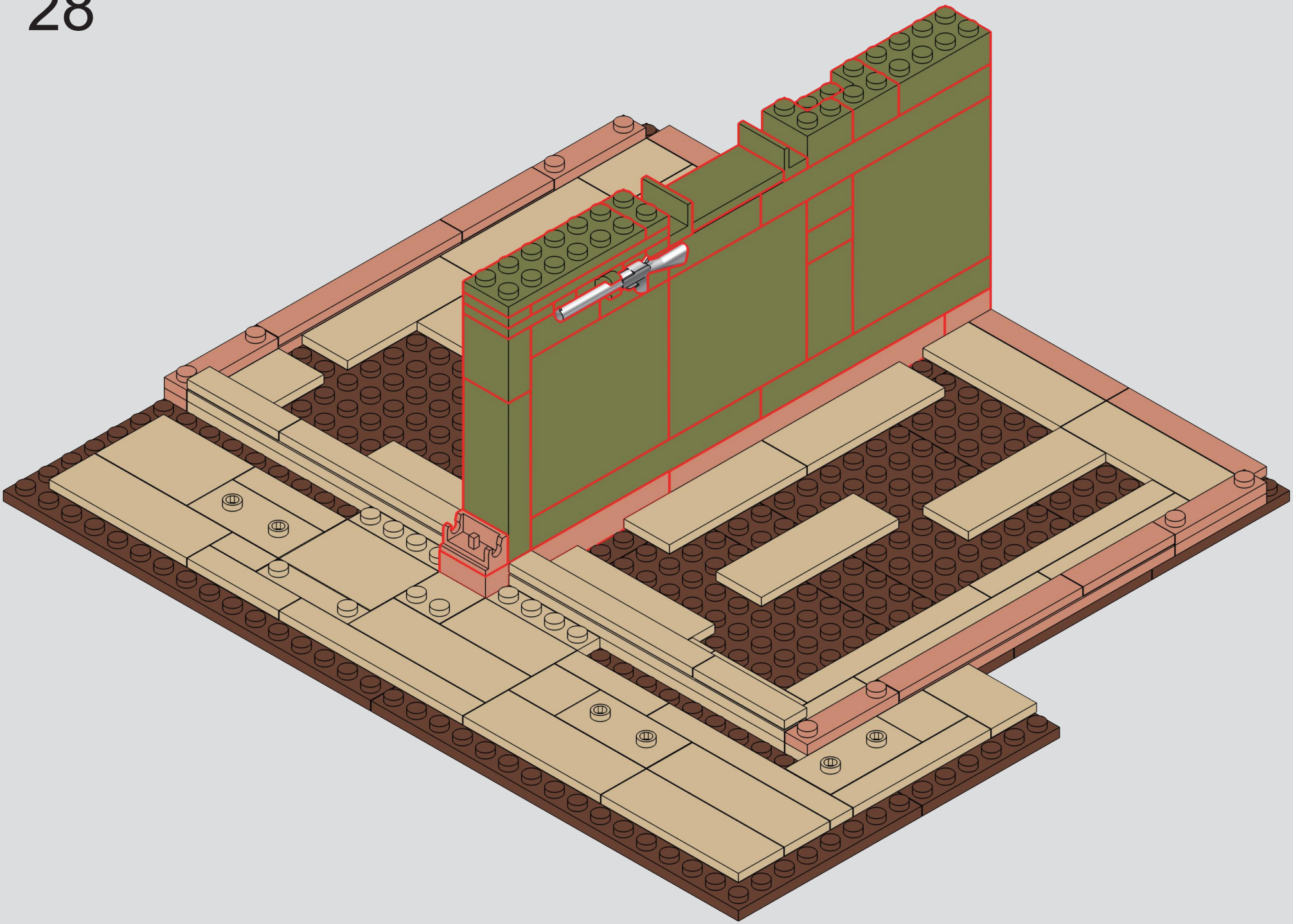

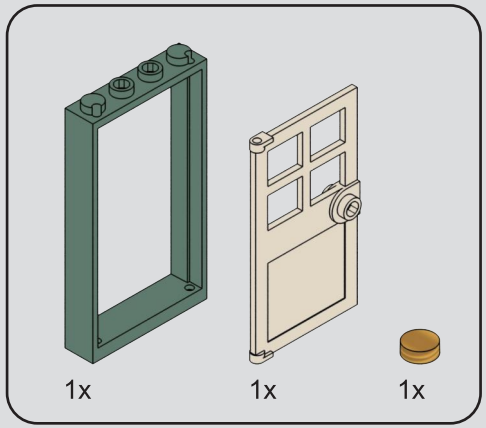

29

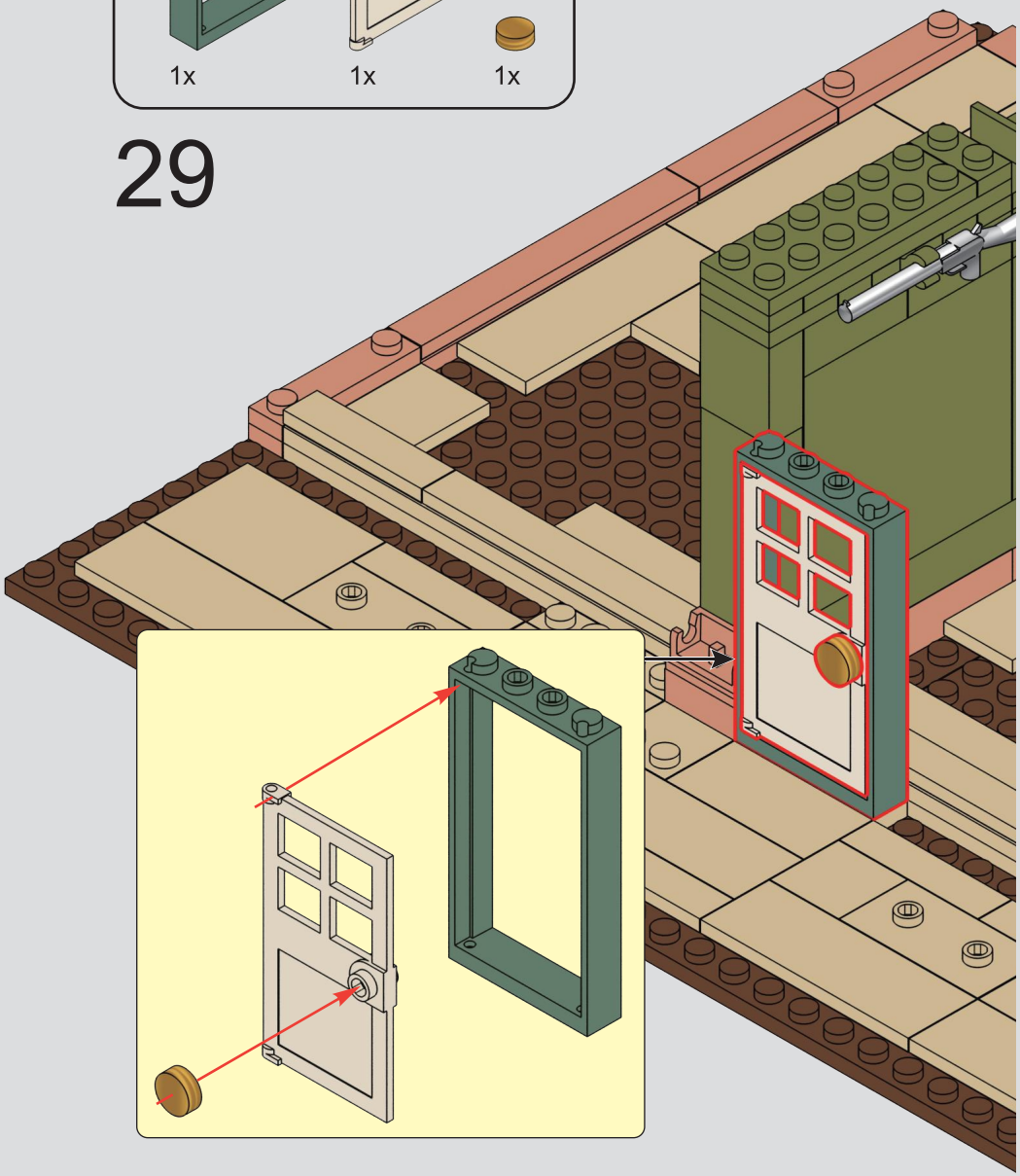

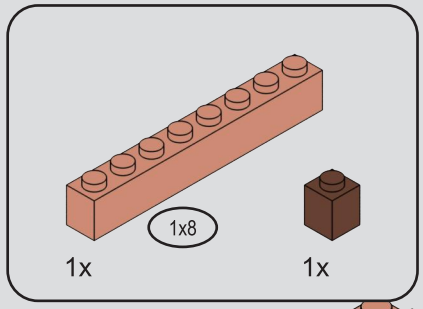

30

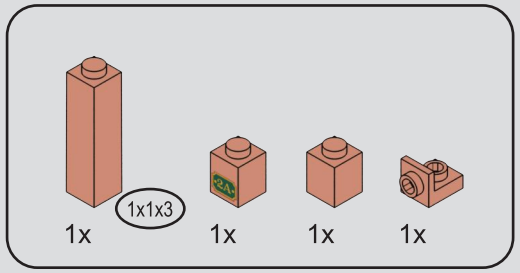

31

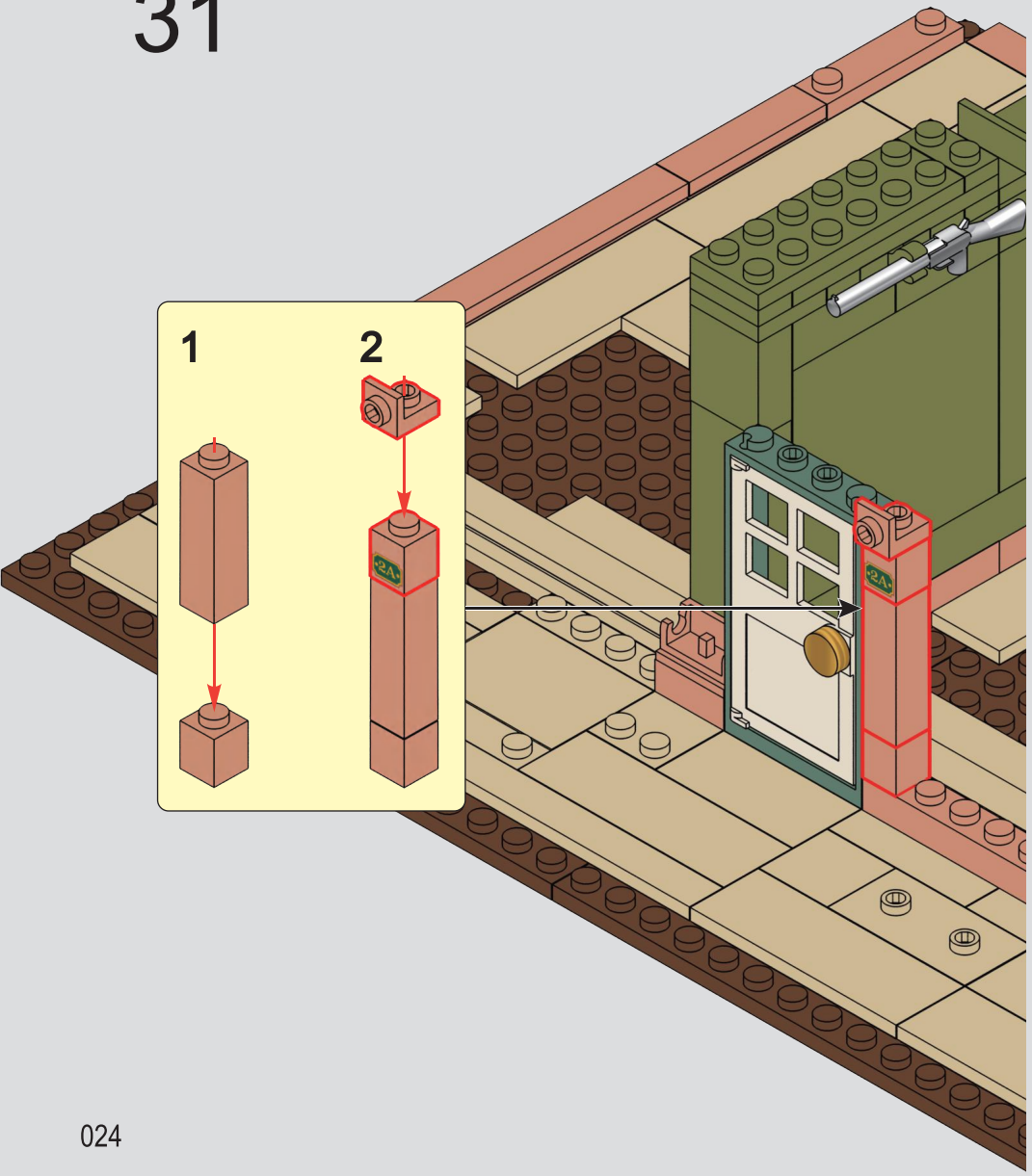

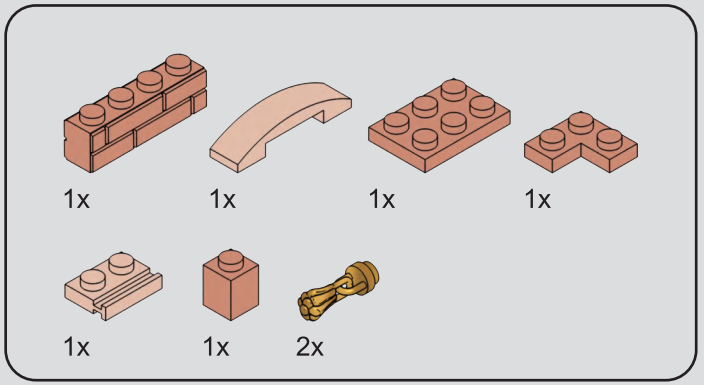

32

1

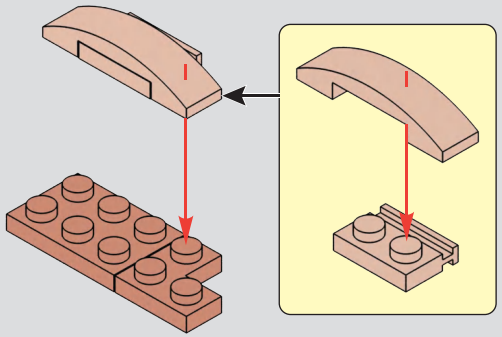

2

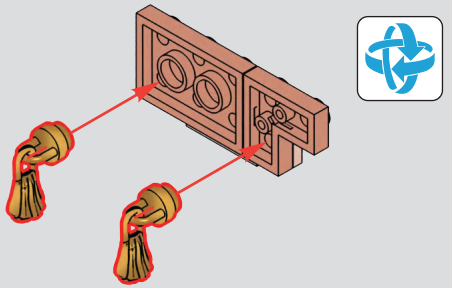

3

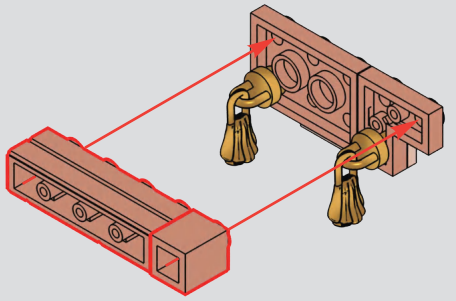

33

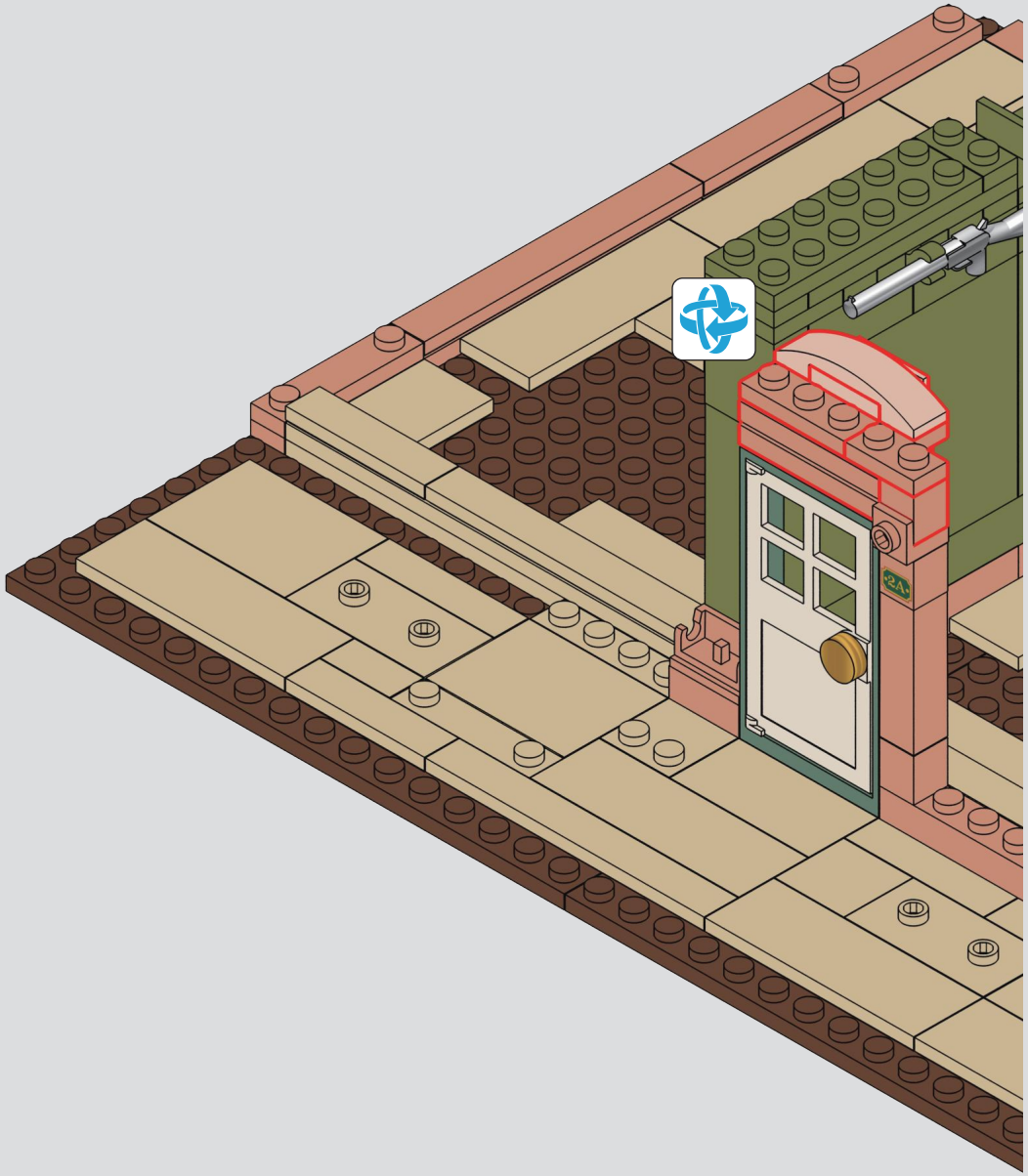

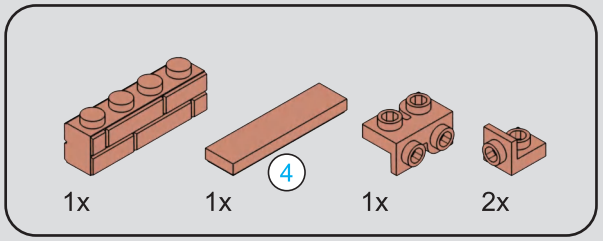

34

1

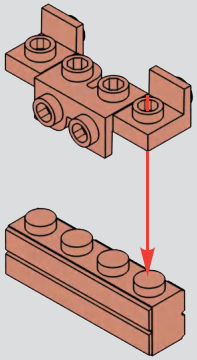

2

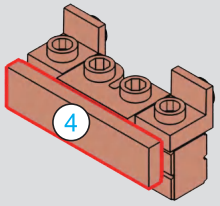



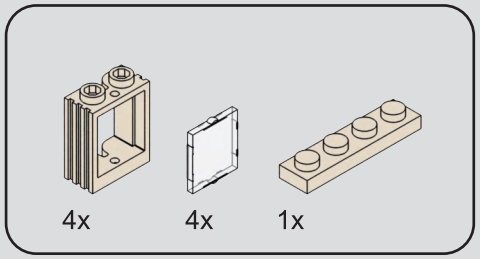

35

1

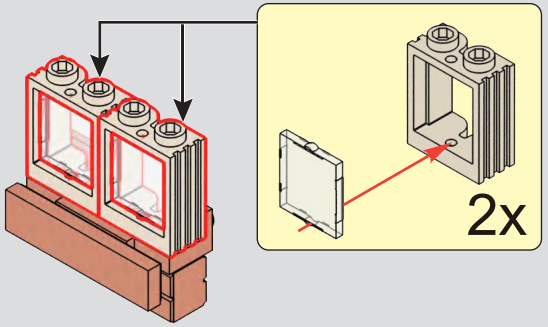

2

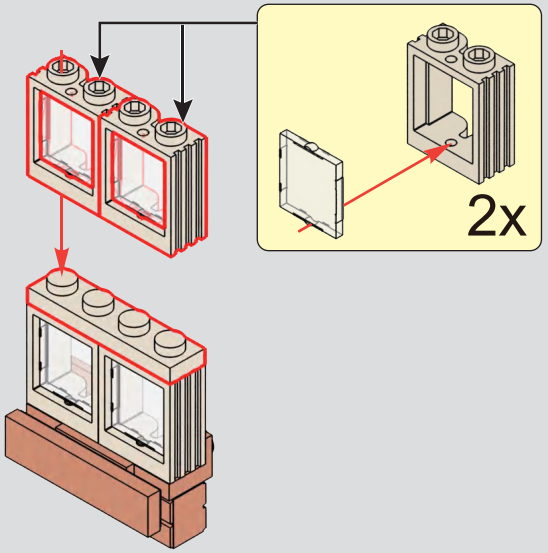

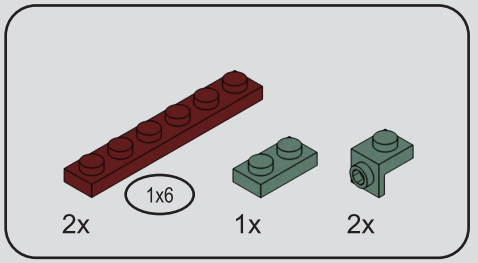

36

1

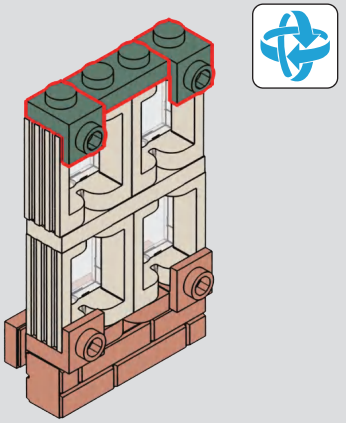

2

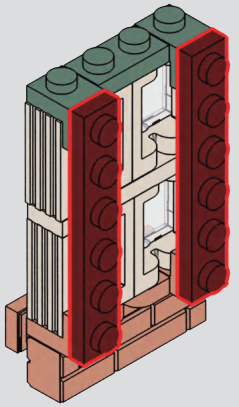

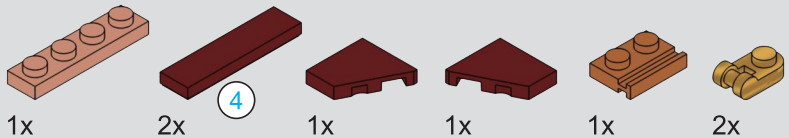

37

1

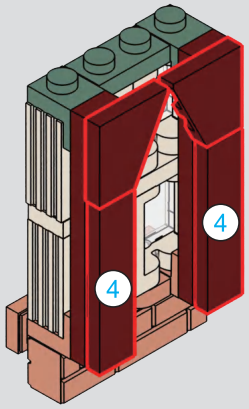

2

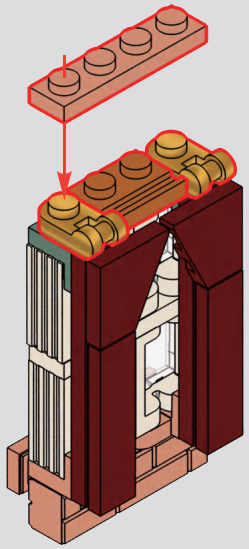



38

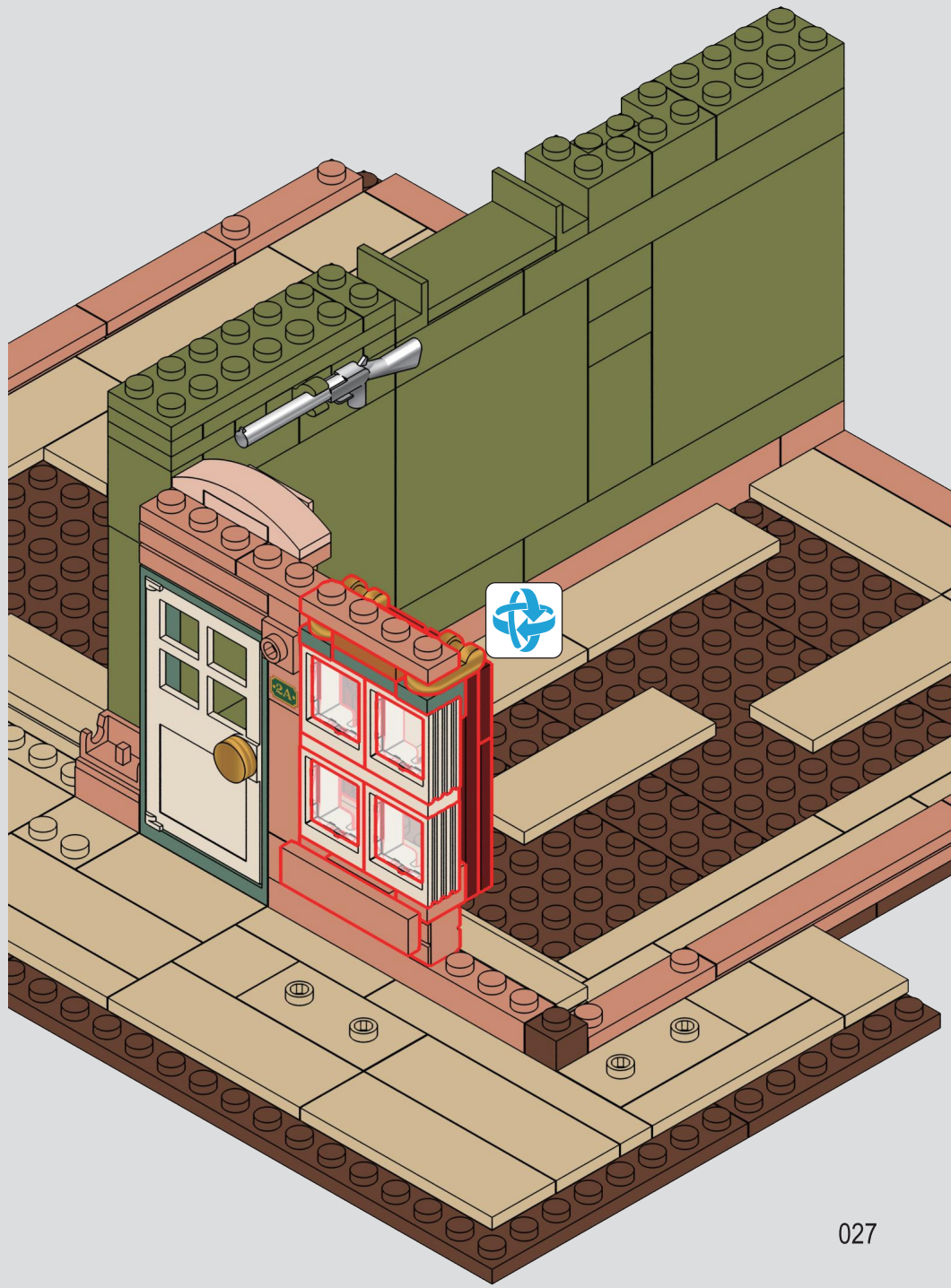

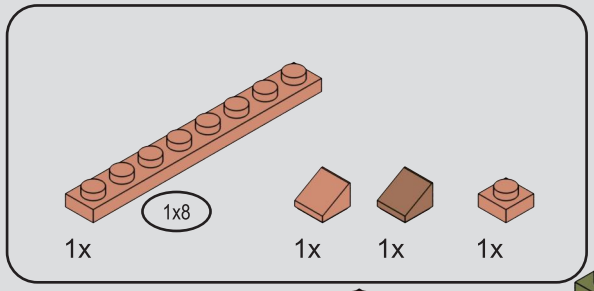

39

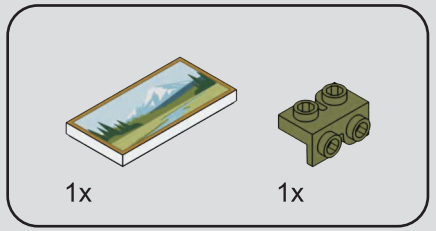

40

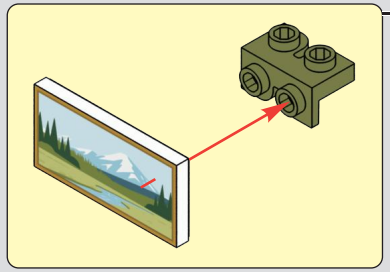

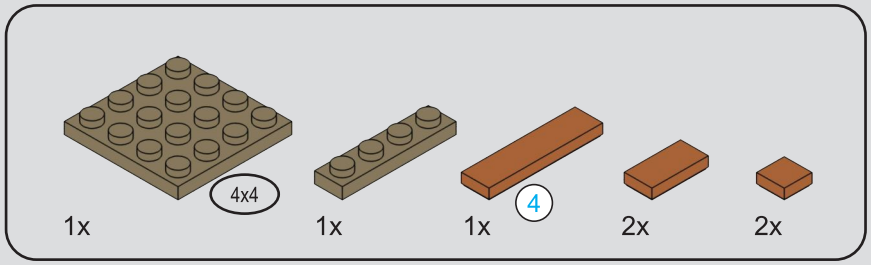

41

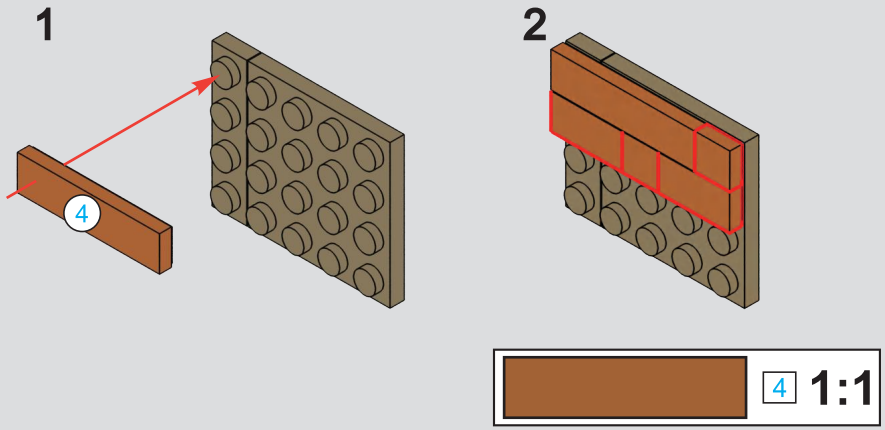

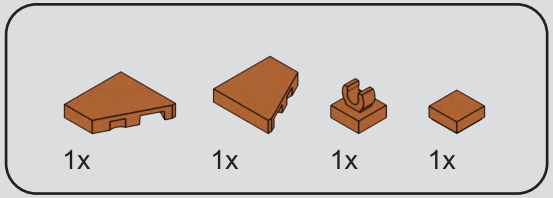

42

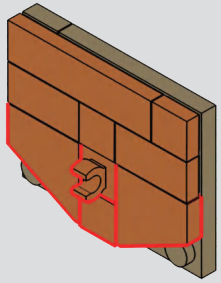

43

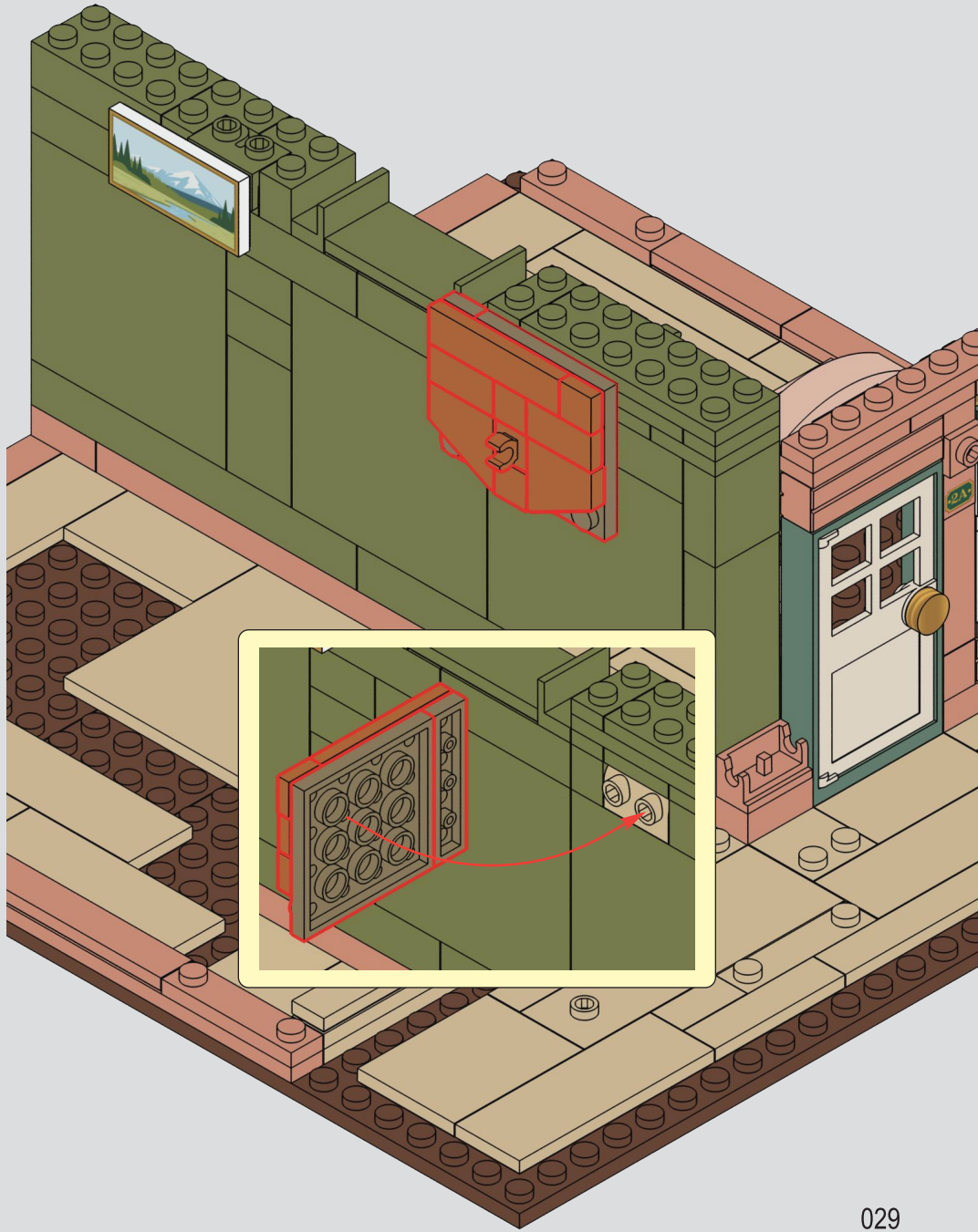

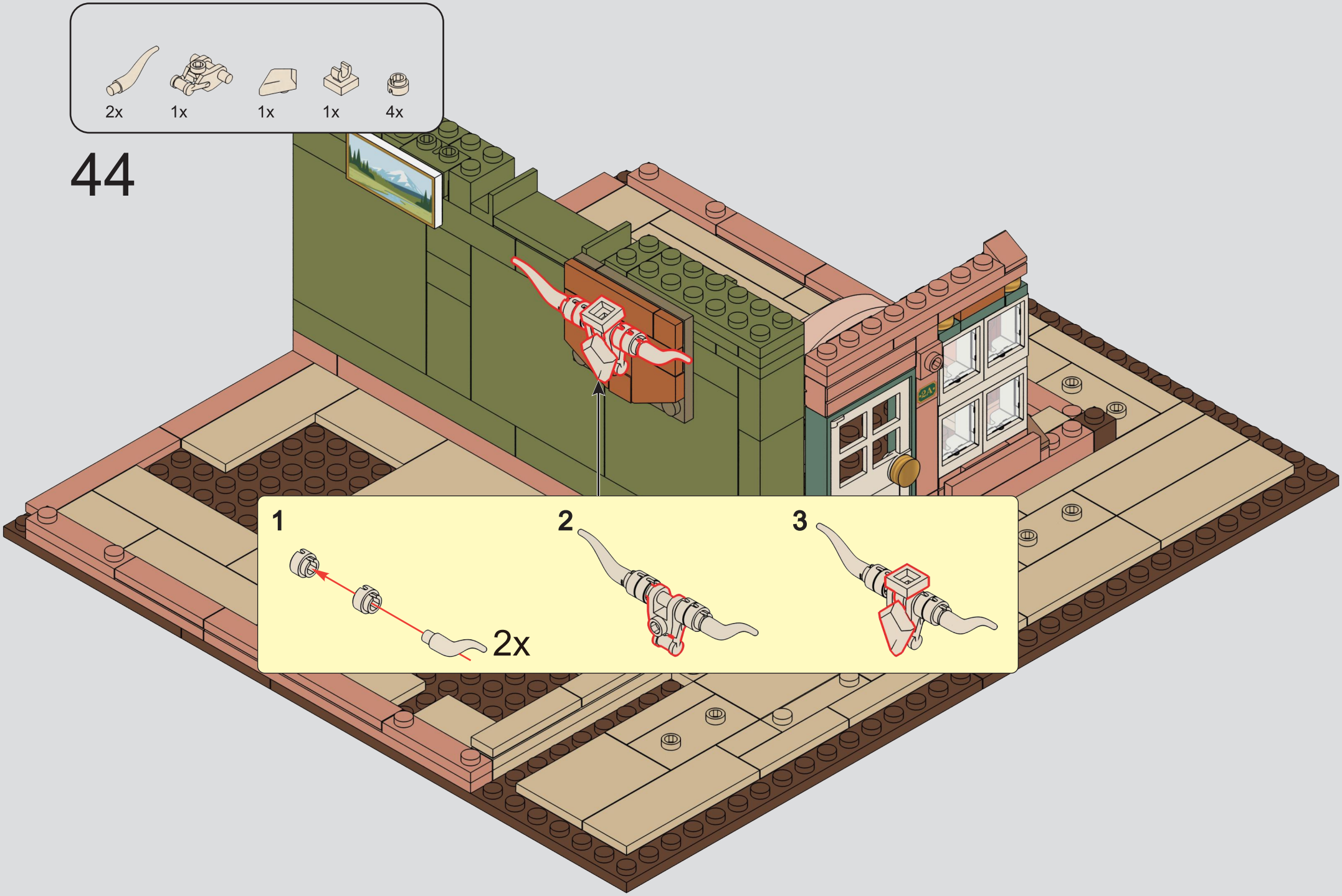
2x
1x
1x
1x
4x
44
1
2x
2
3

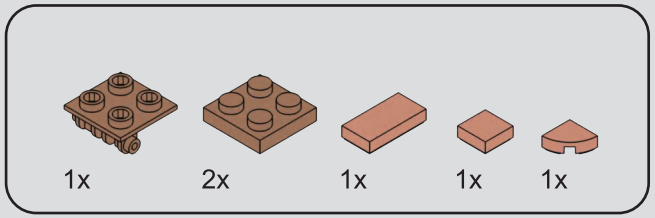

45

1

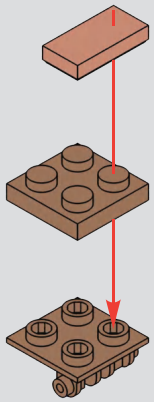

2

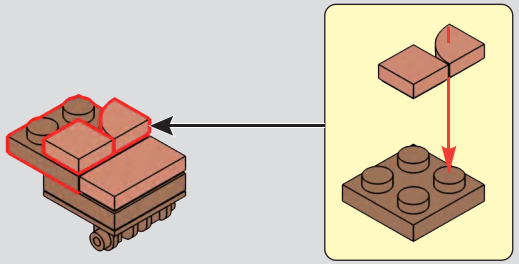

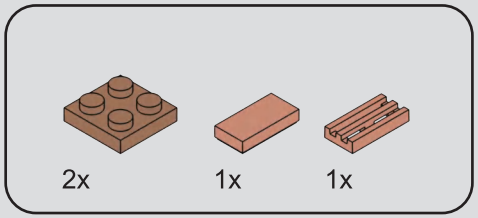

46

1

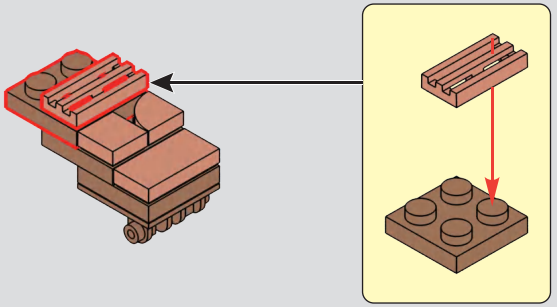

2

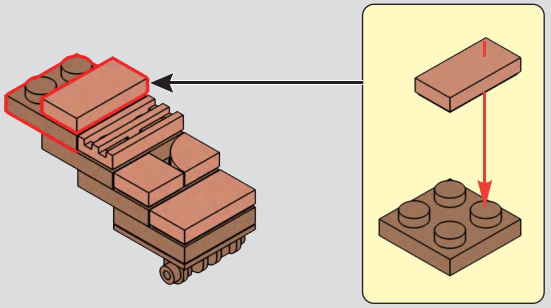

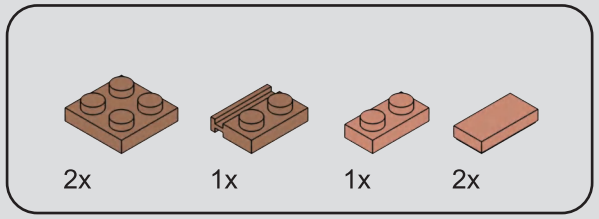

47

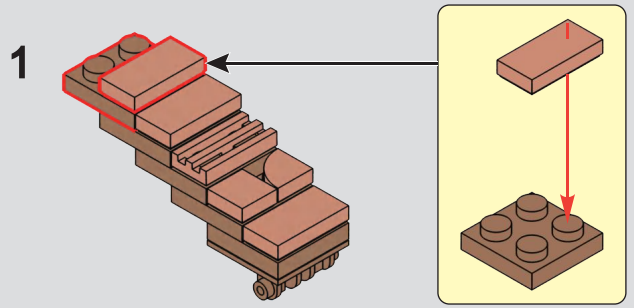

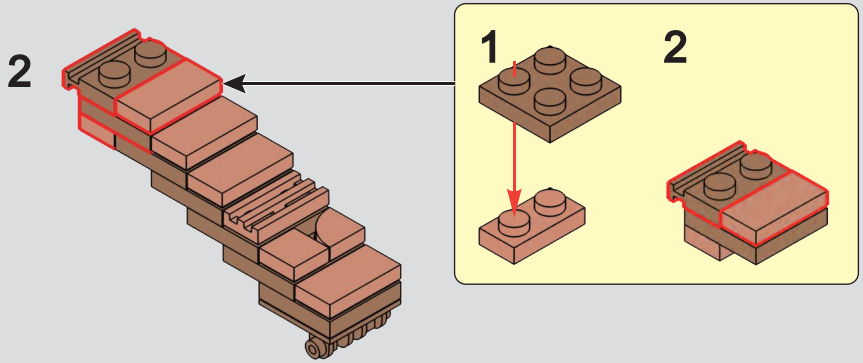

48

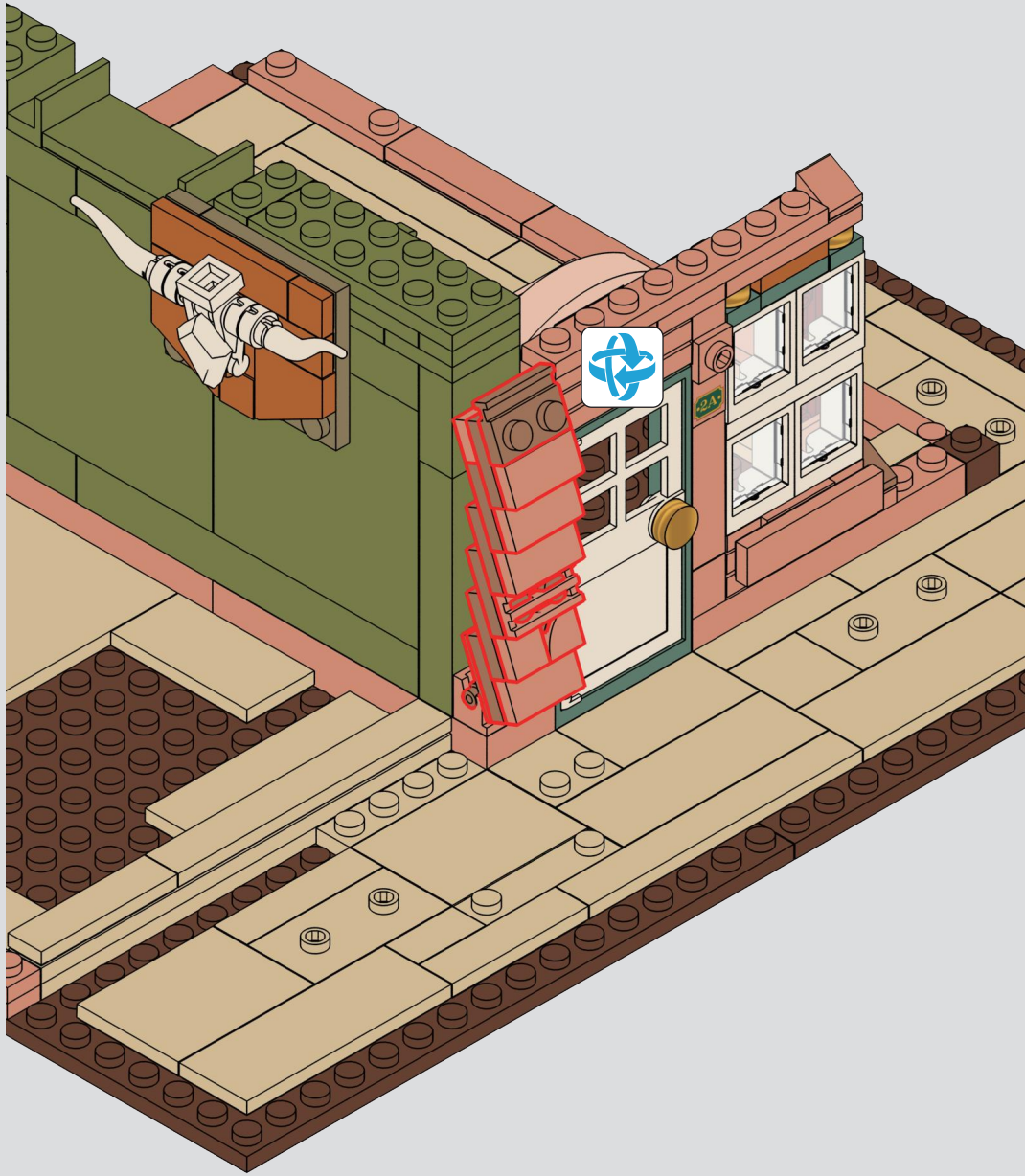

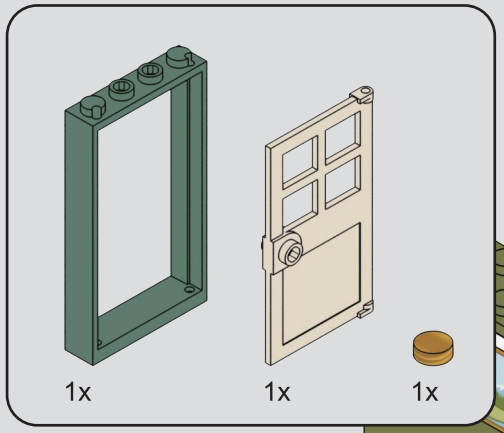

49

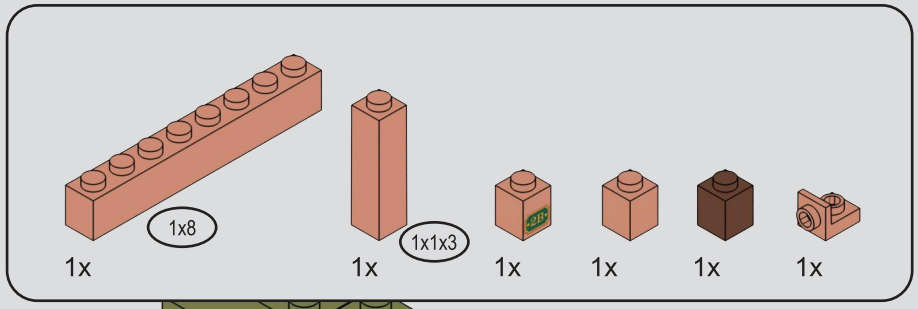

50

1

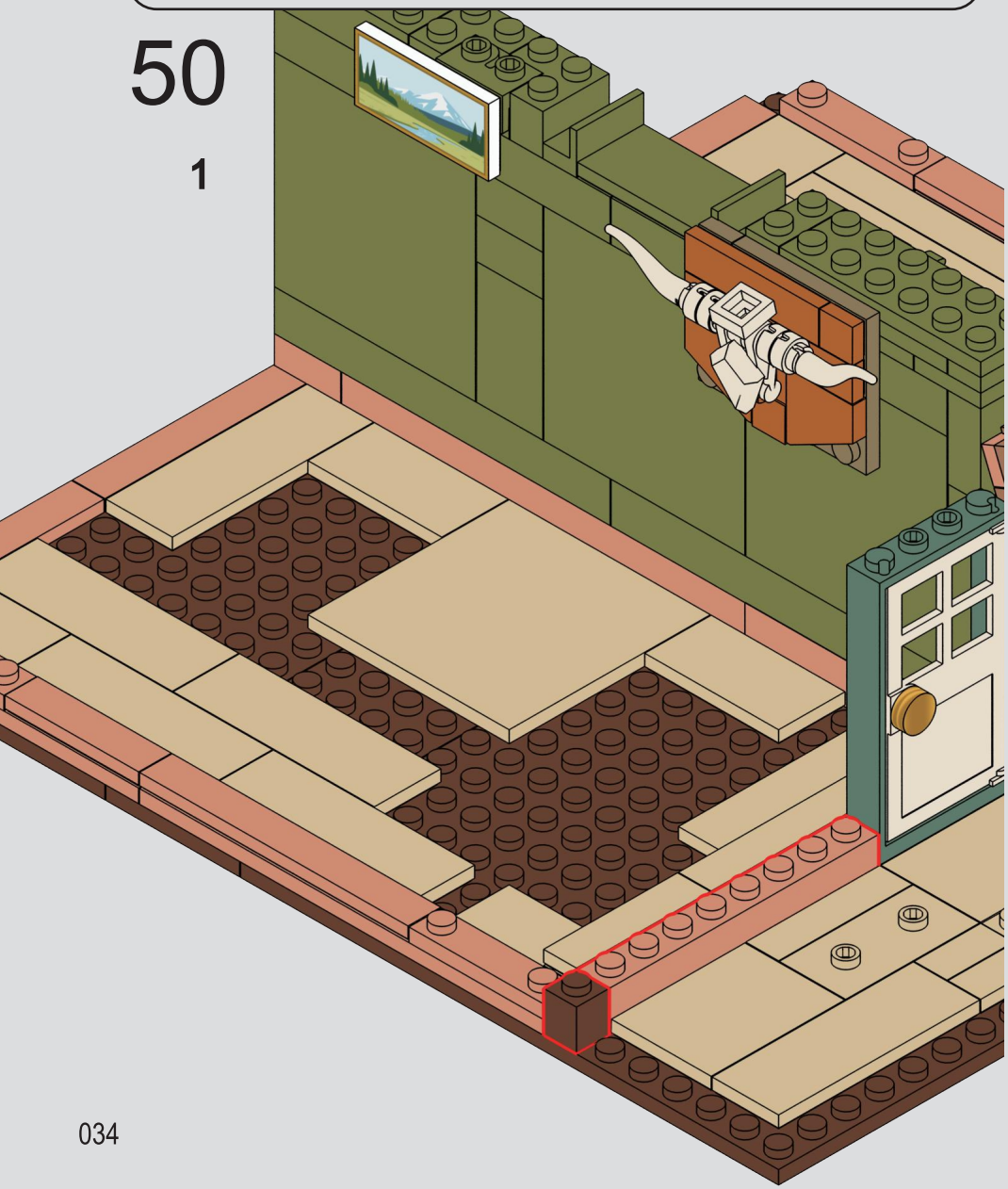

2

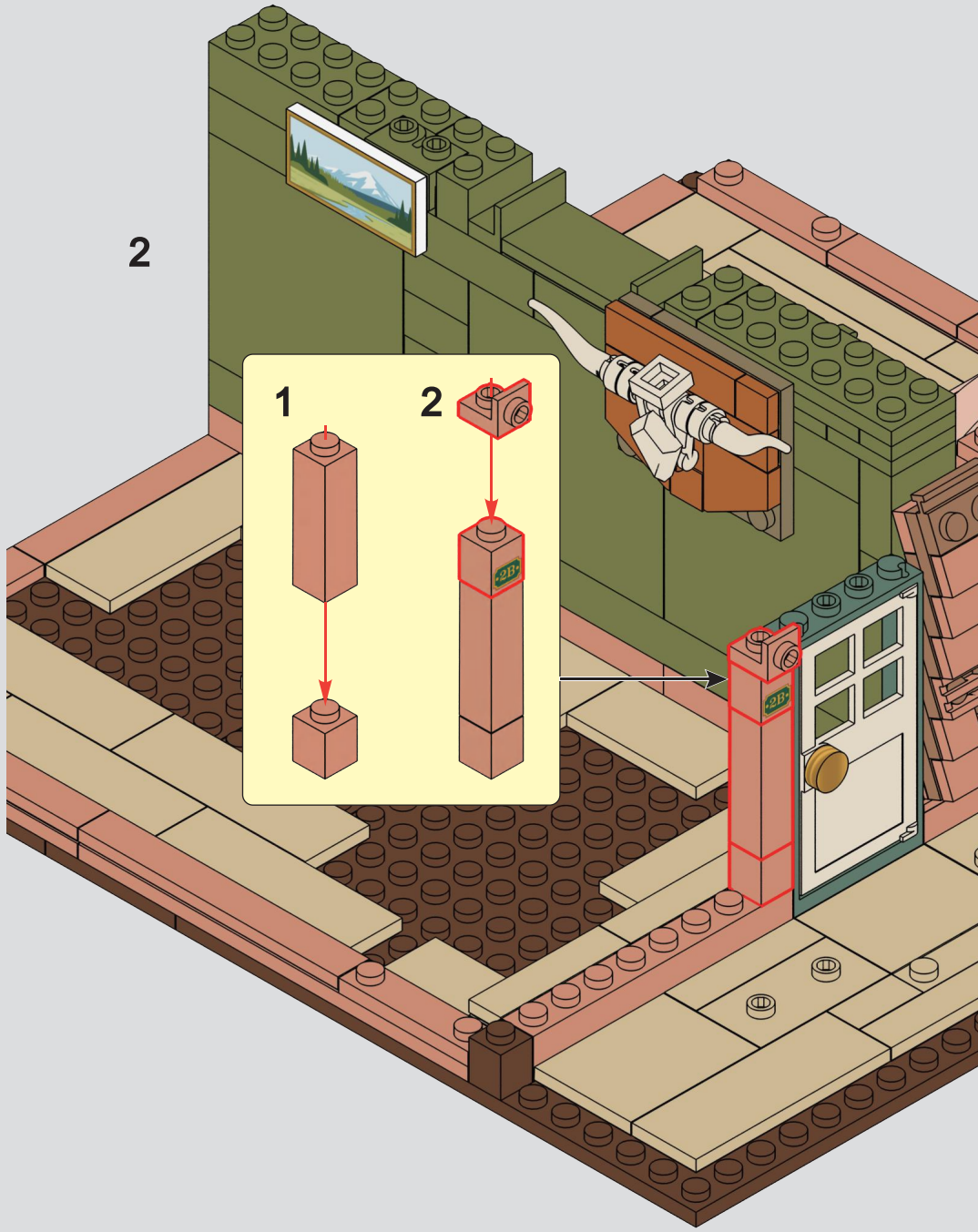

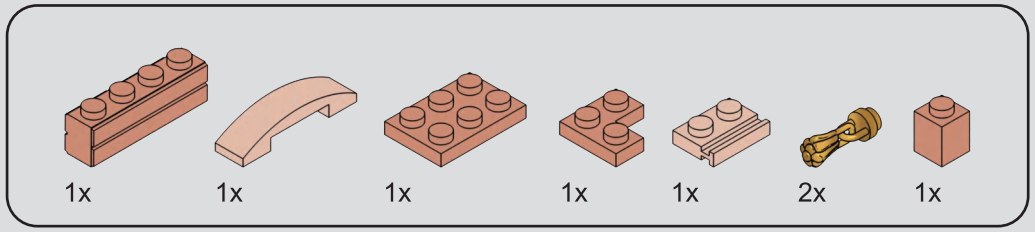

51

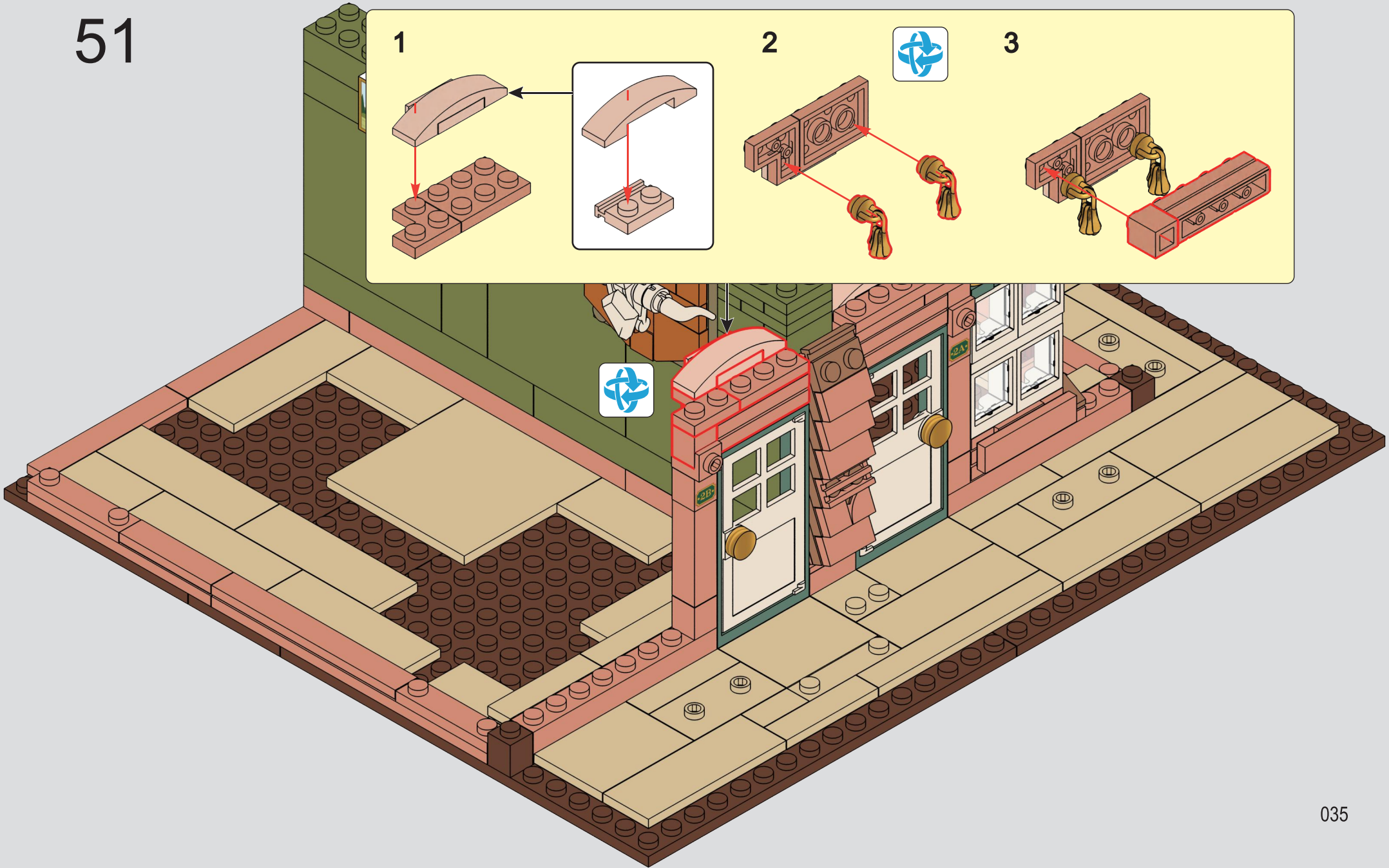

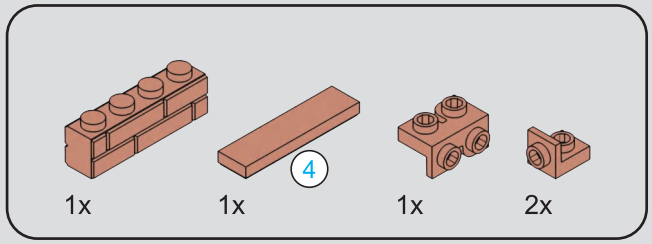

52

1

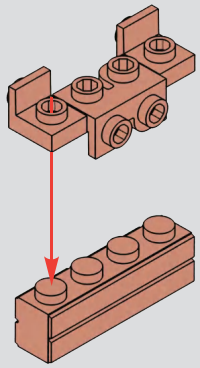

2

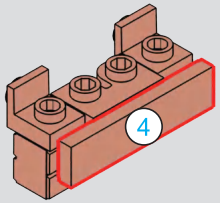



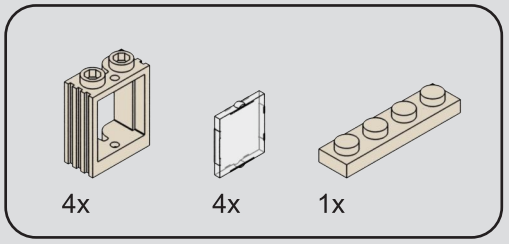

53

1

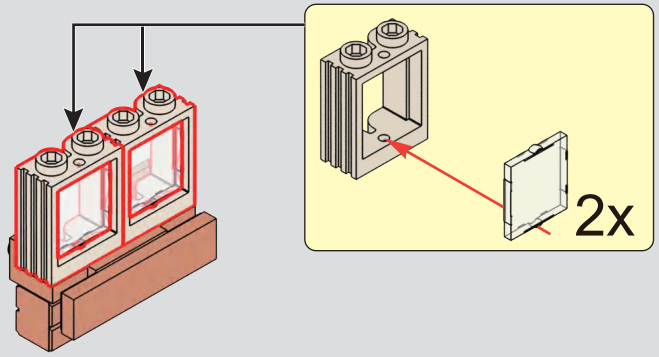

2

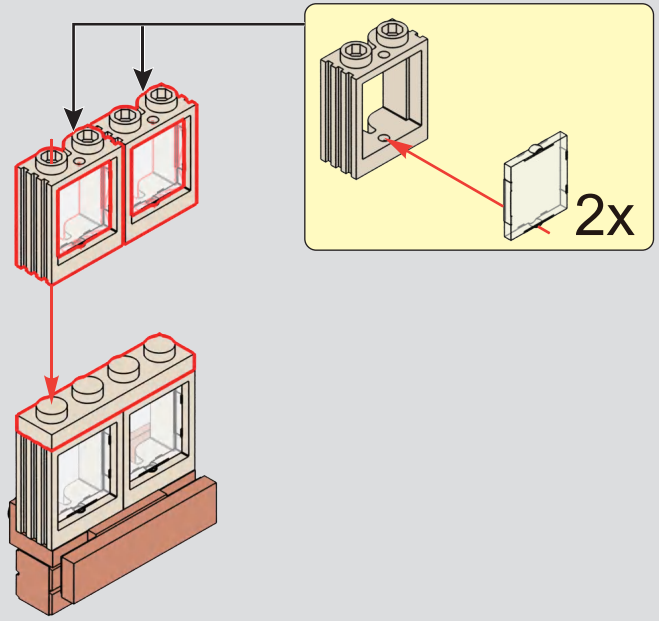

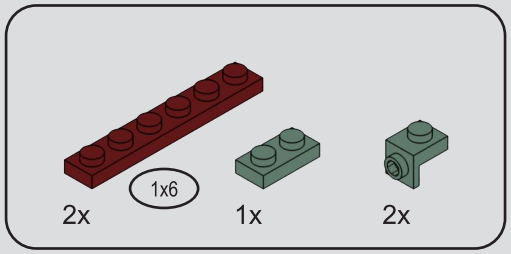

54

1

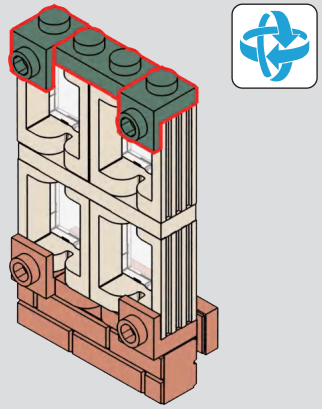

2

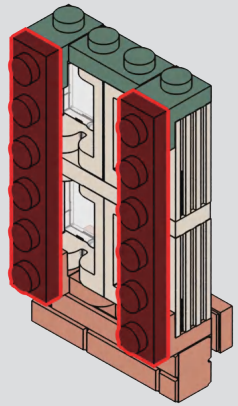

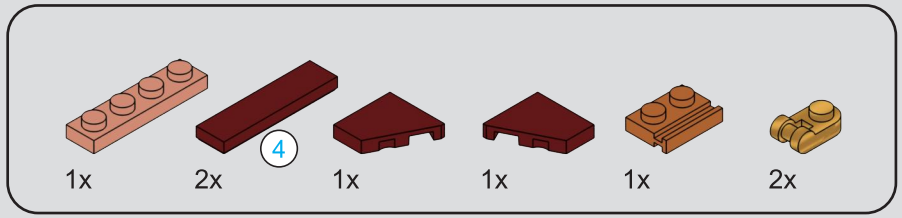

55

1

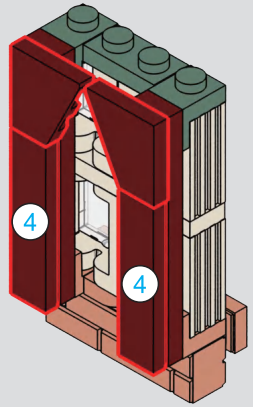

2

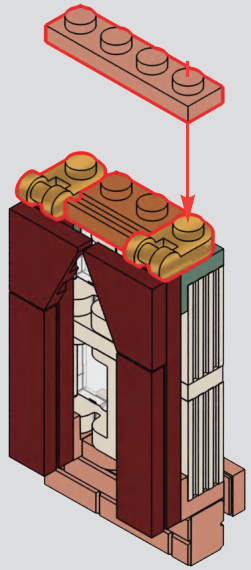



56

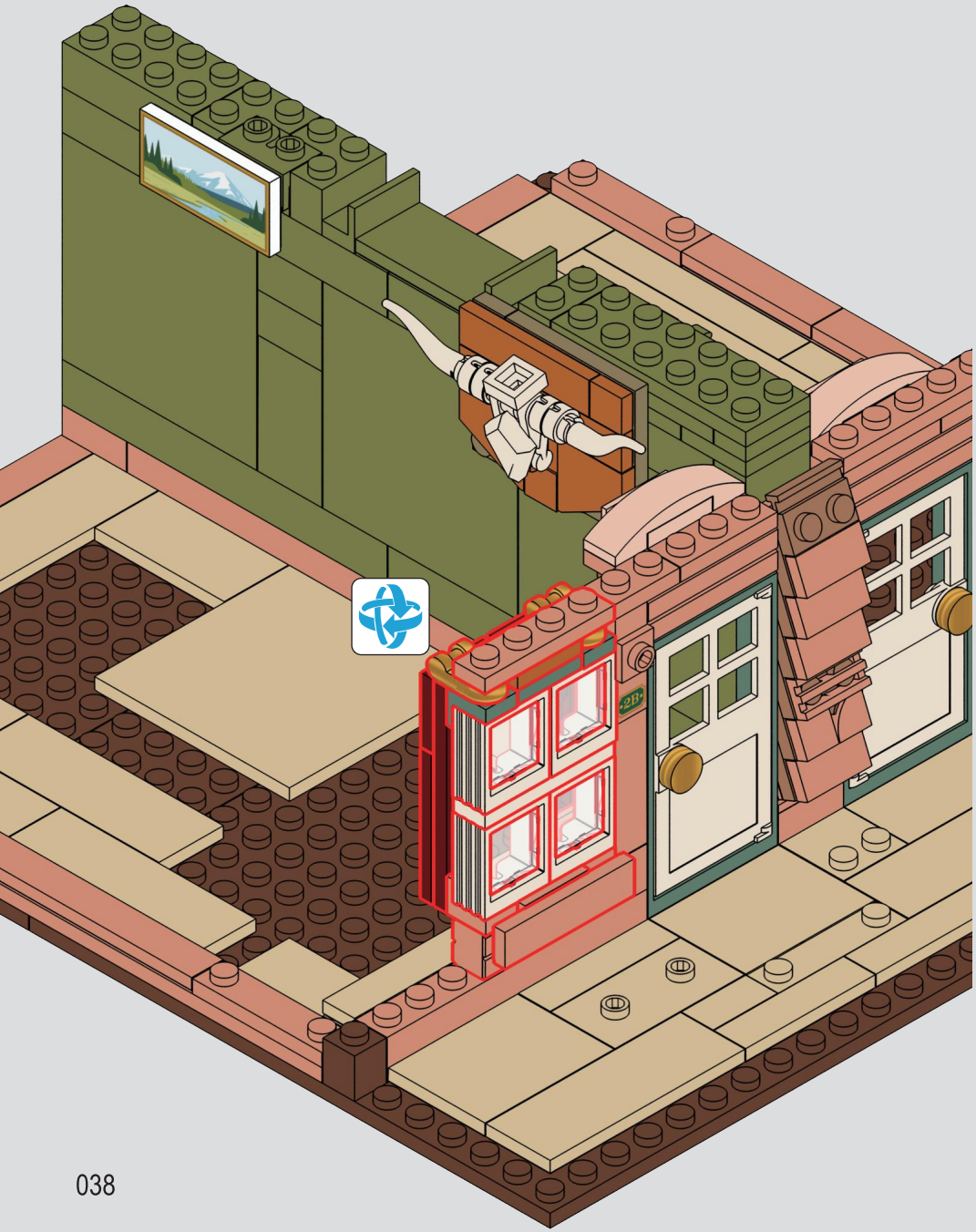

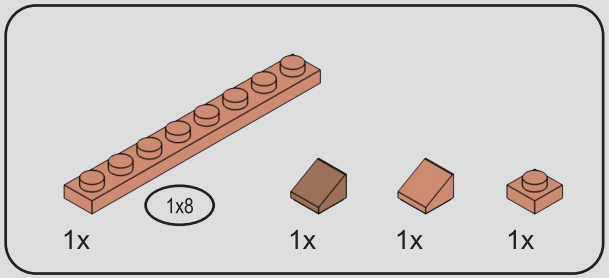

57

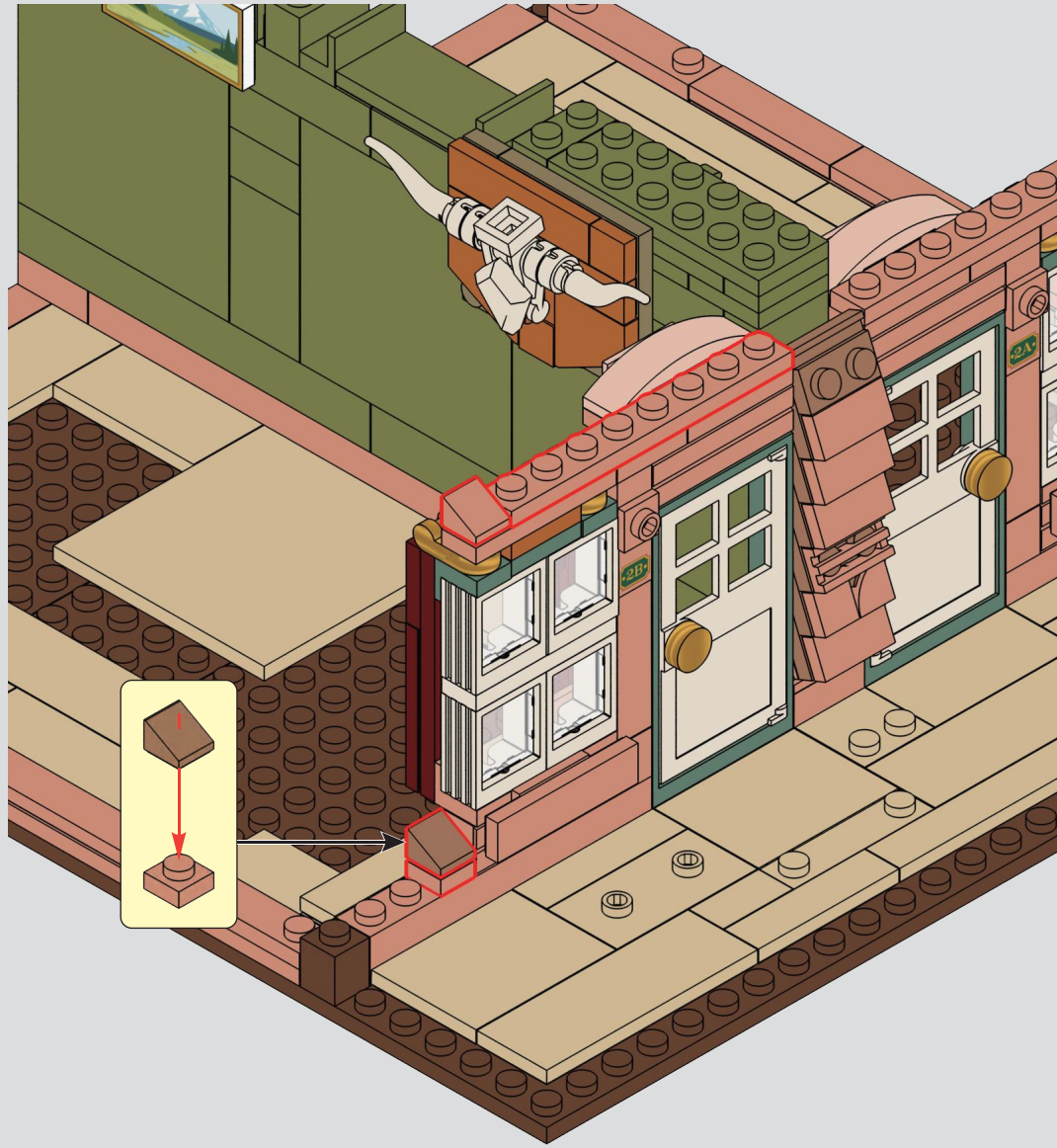

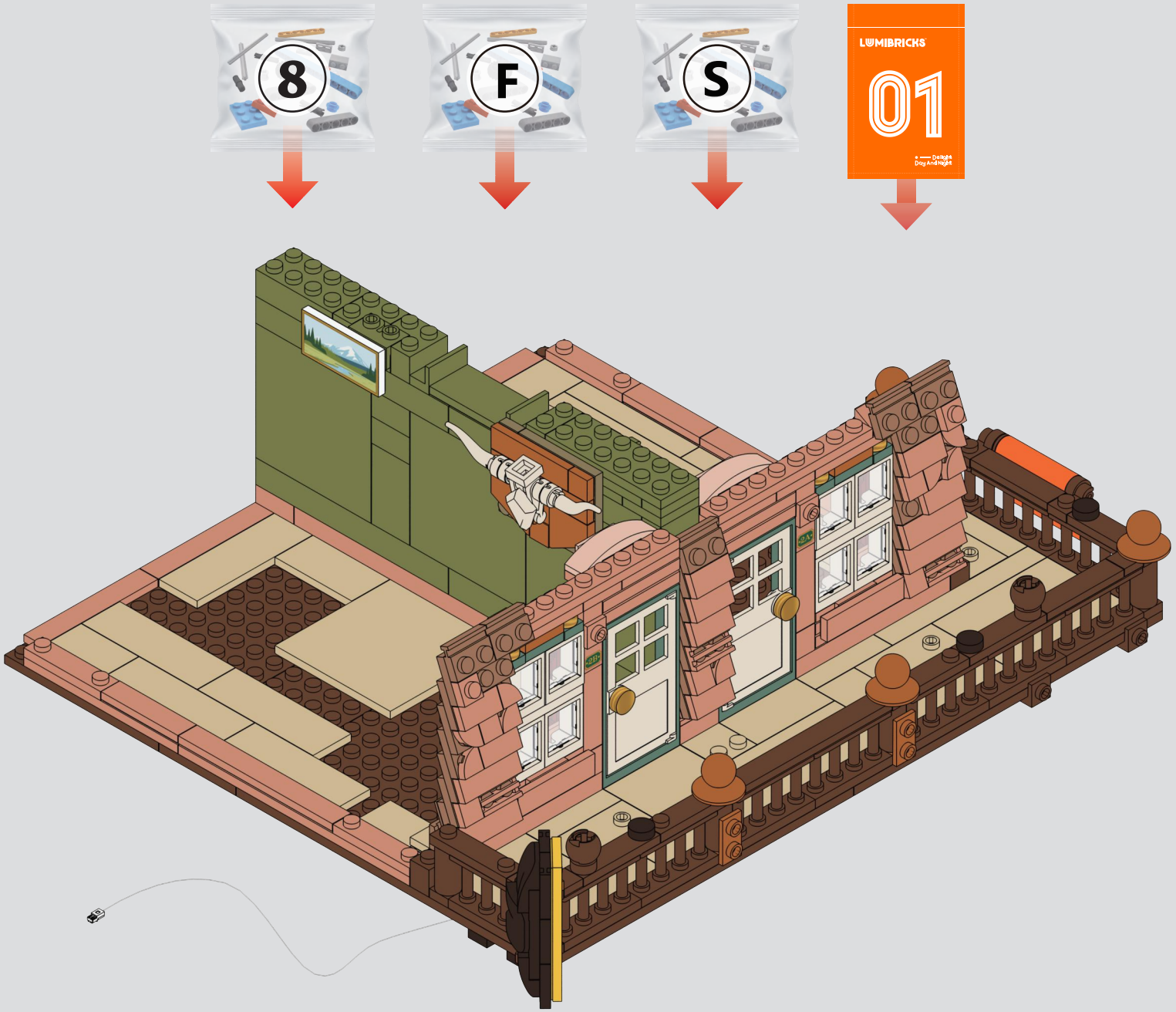
8
F
S
LUMIBRICKS
01

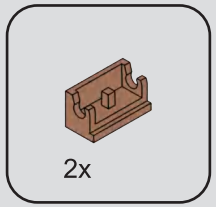

58

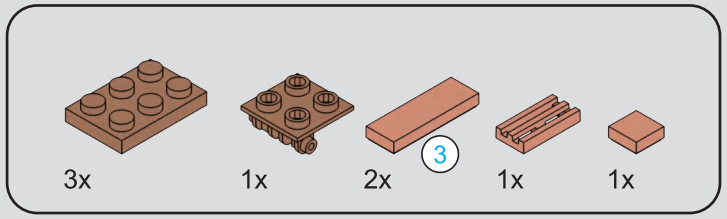

59

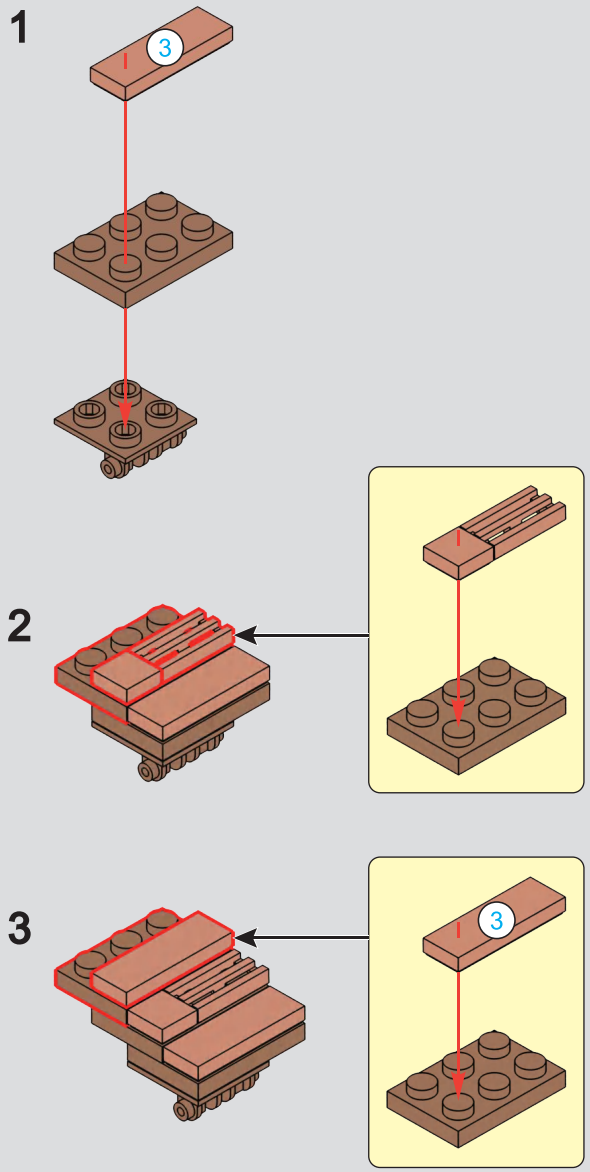

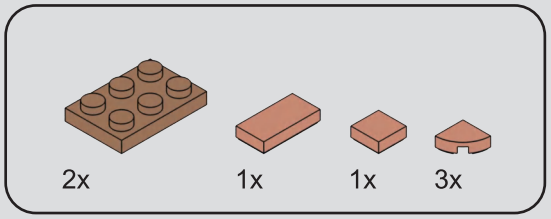

60

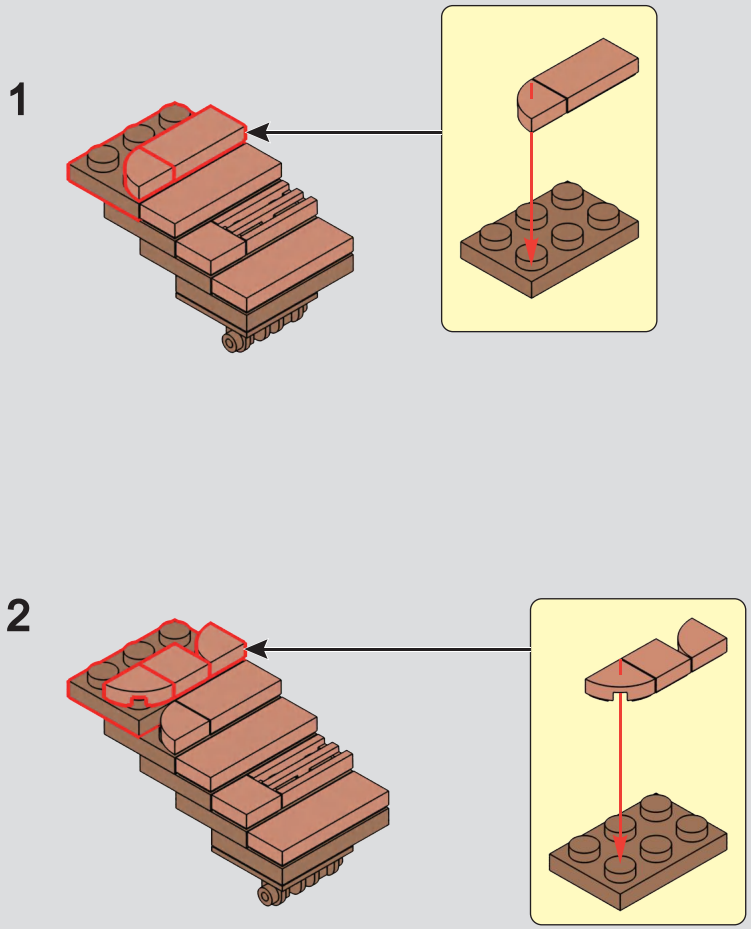

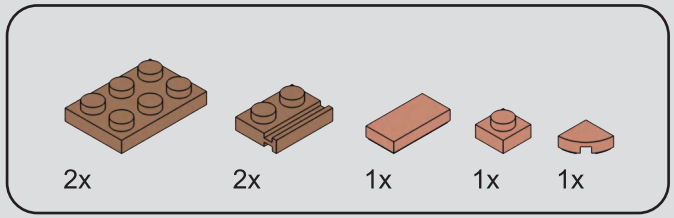

61

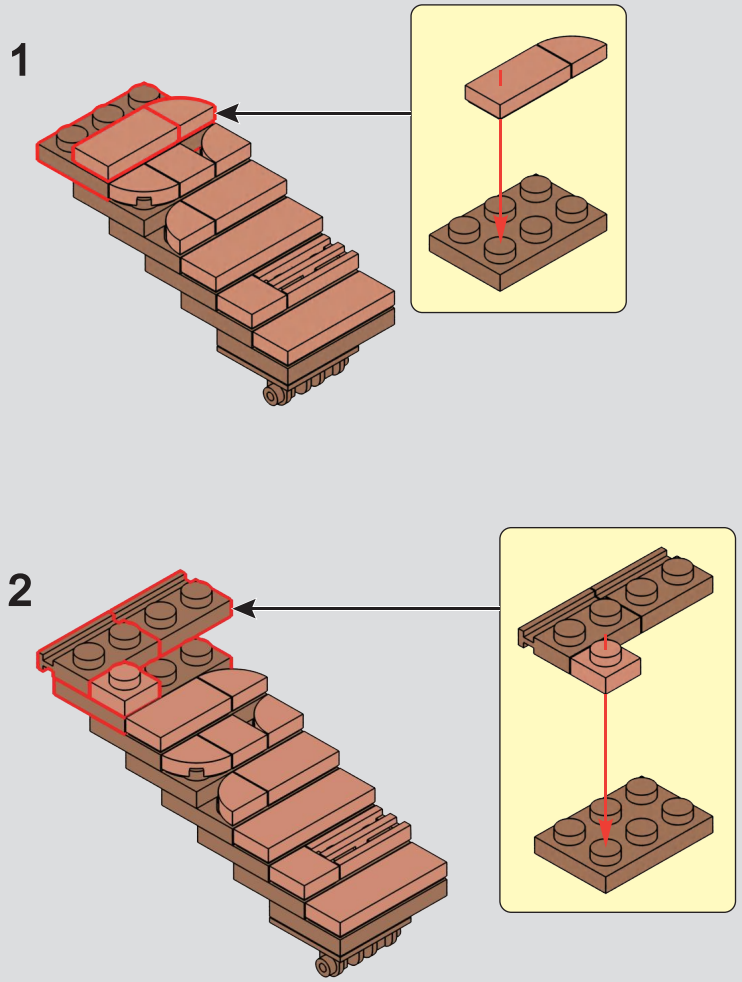

62

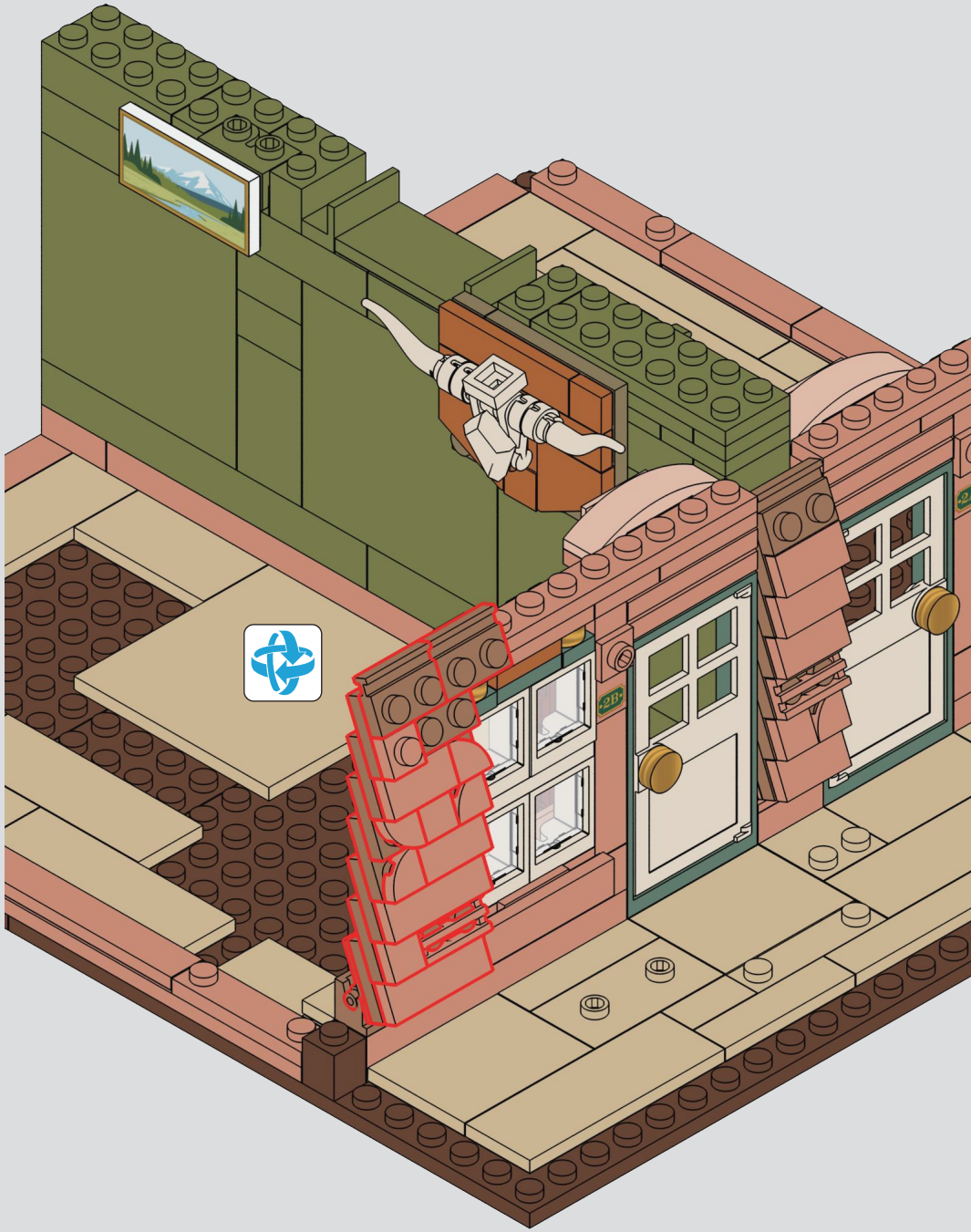

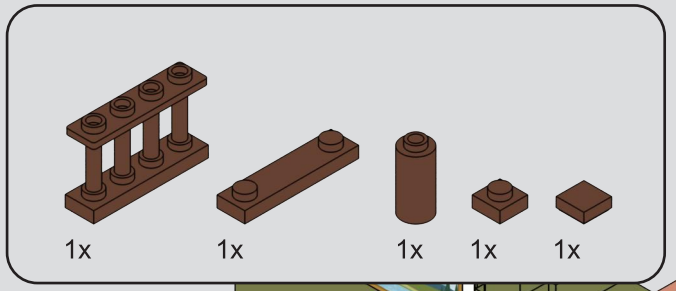

63

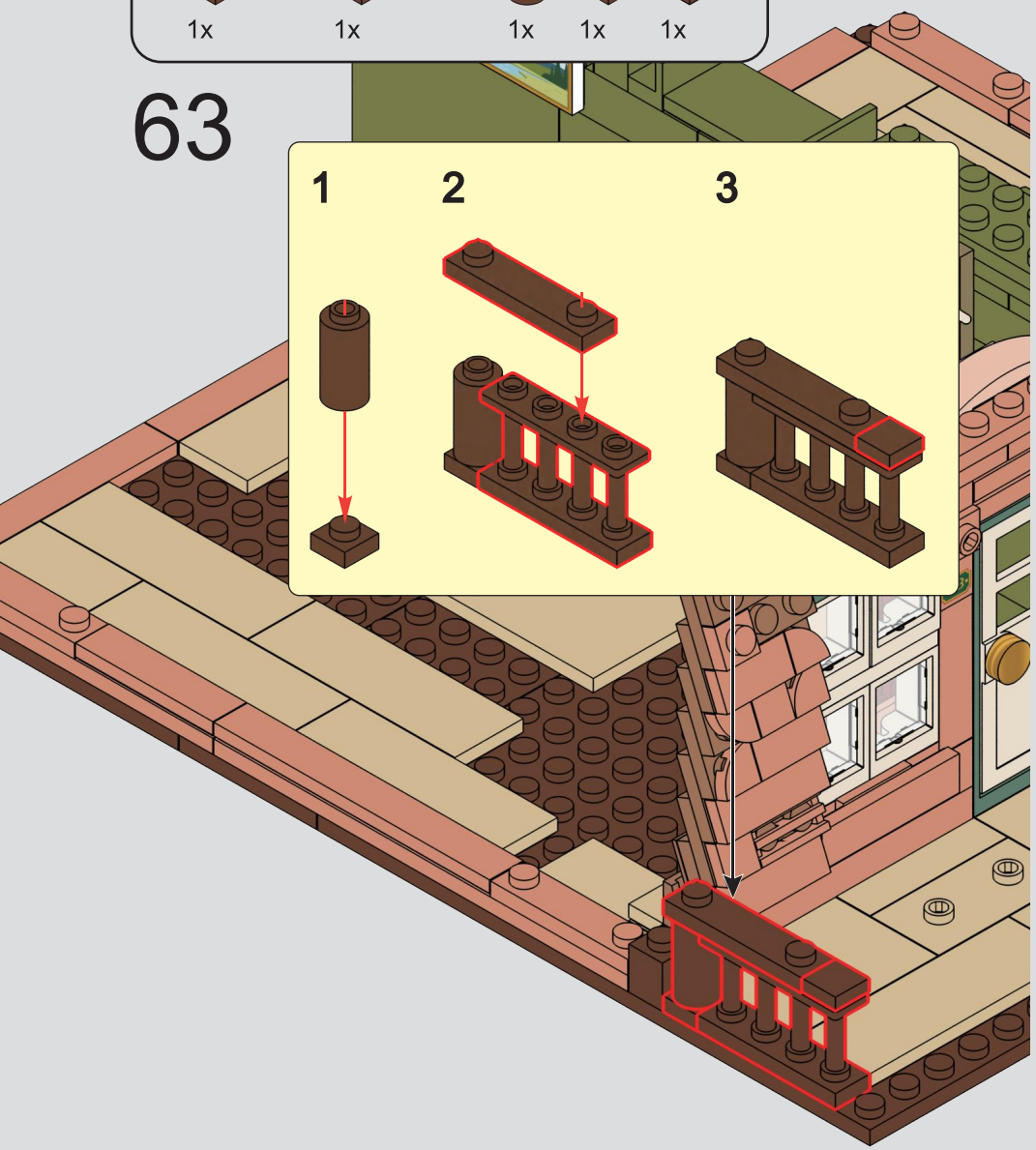

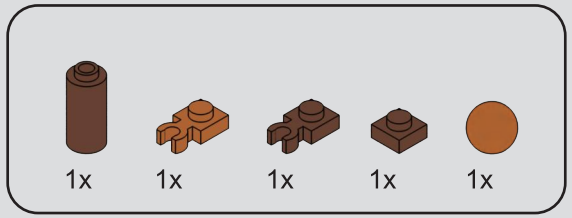

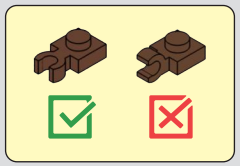

64

1

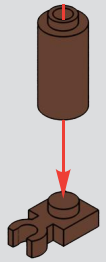

2

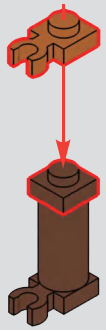

3

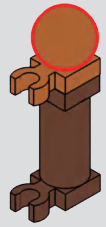

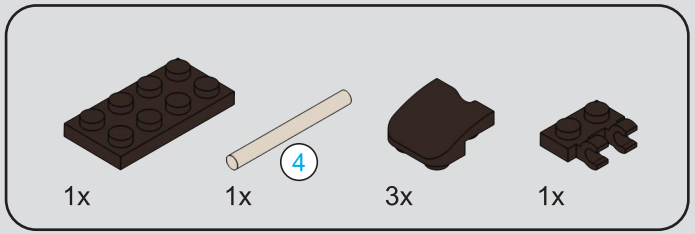

65

1

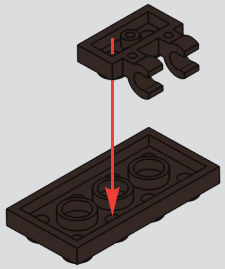

2

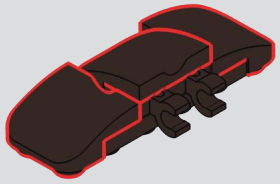

3

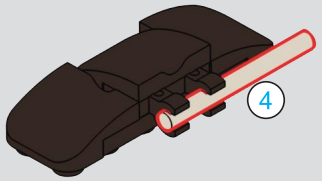

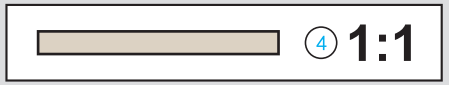

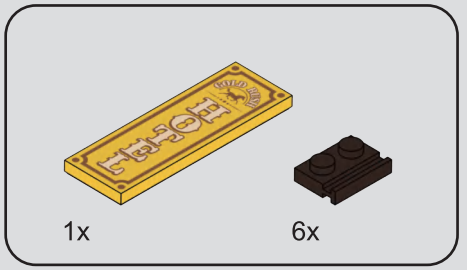

66

1

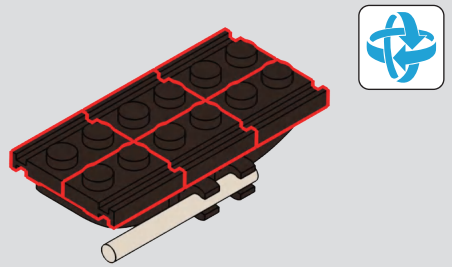

2



67

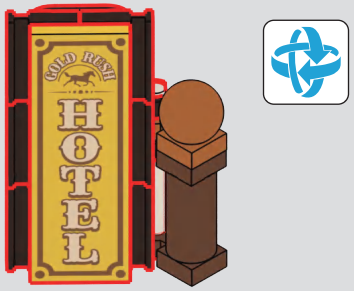

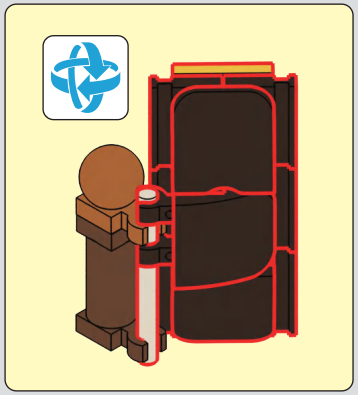

68

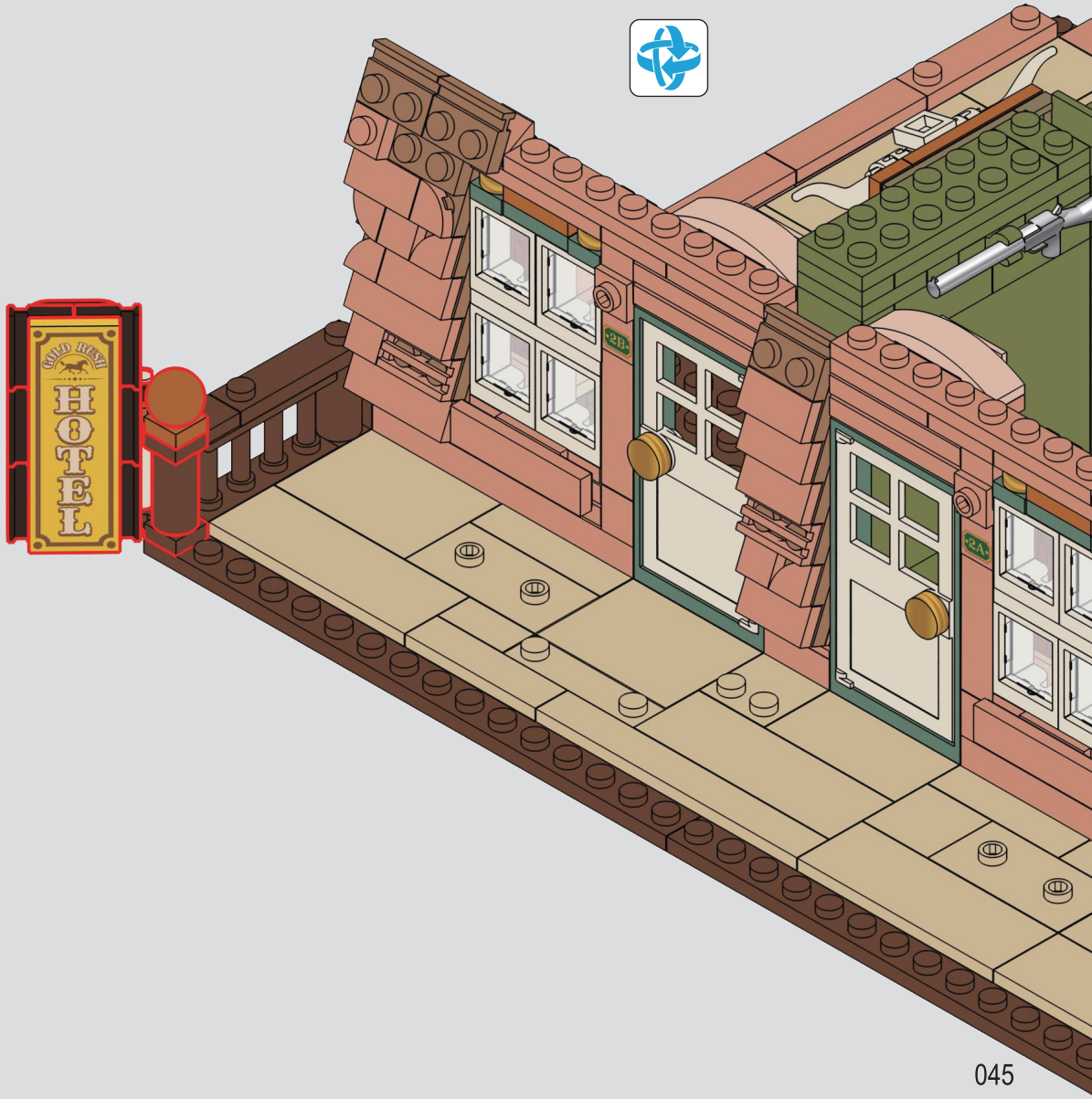

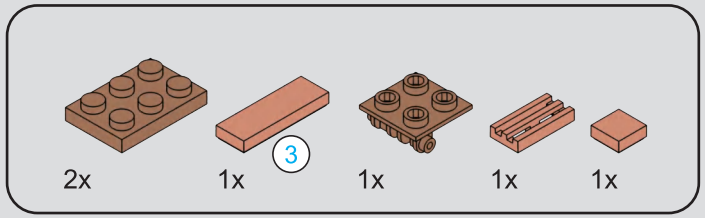

69

1

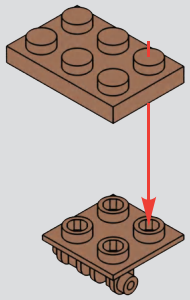

2

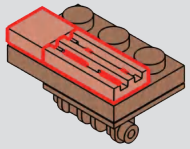

3

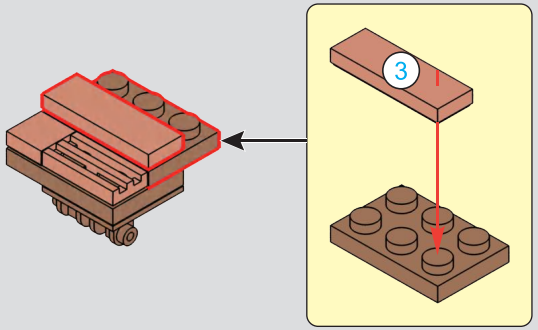

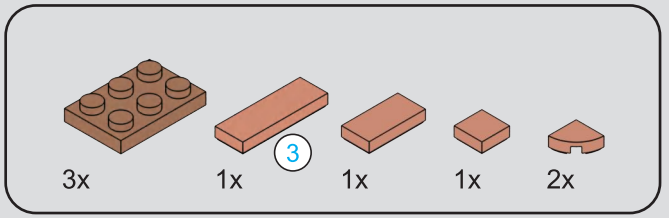

70

1

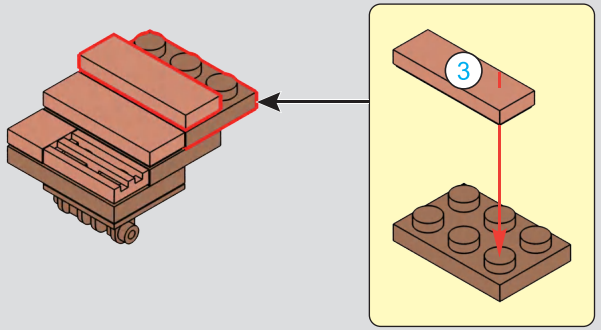

2

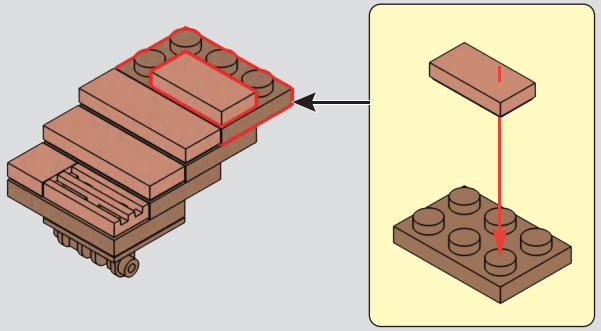

3

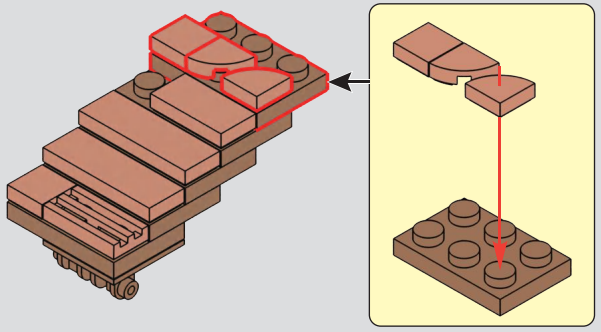

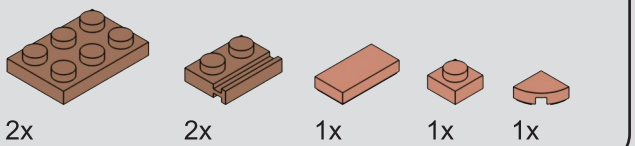

71

1

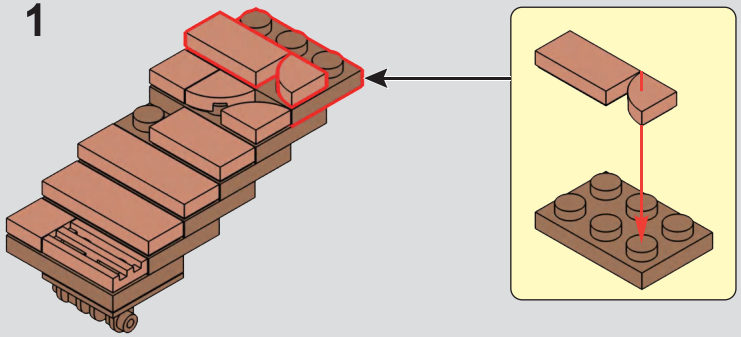

2

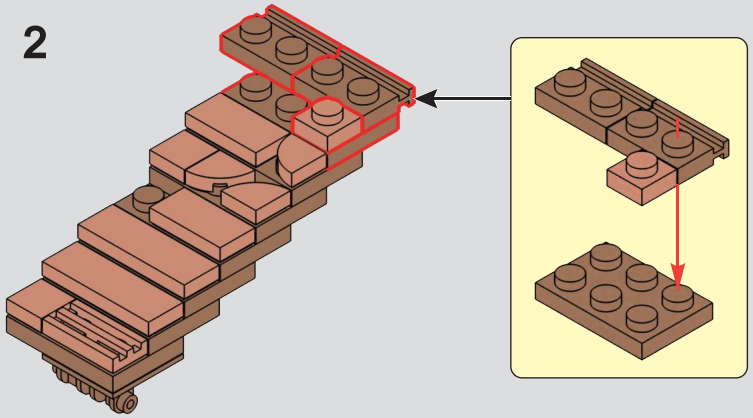

72

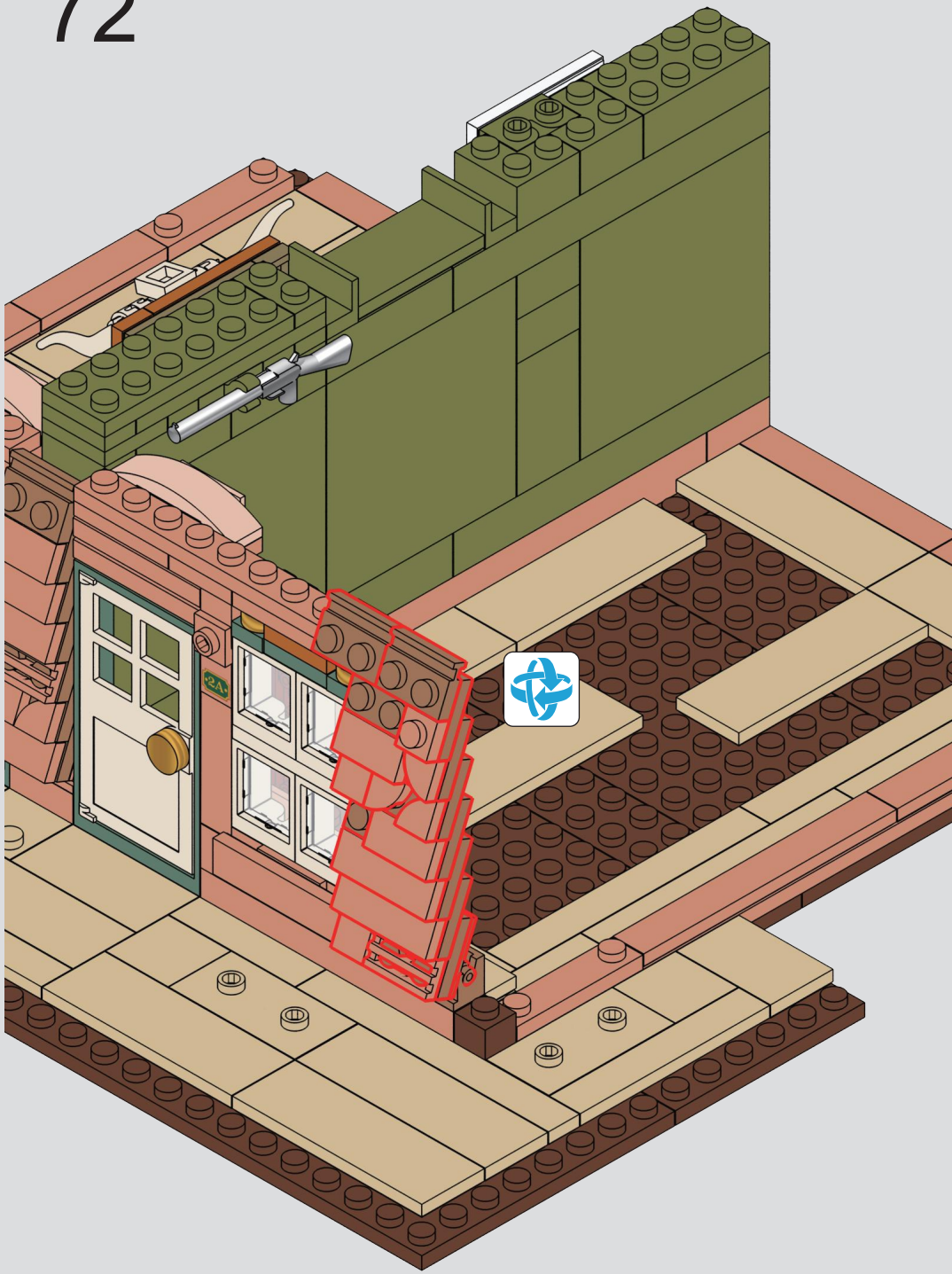

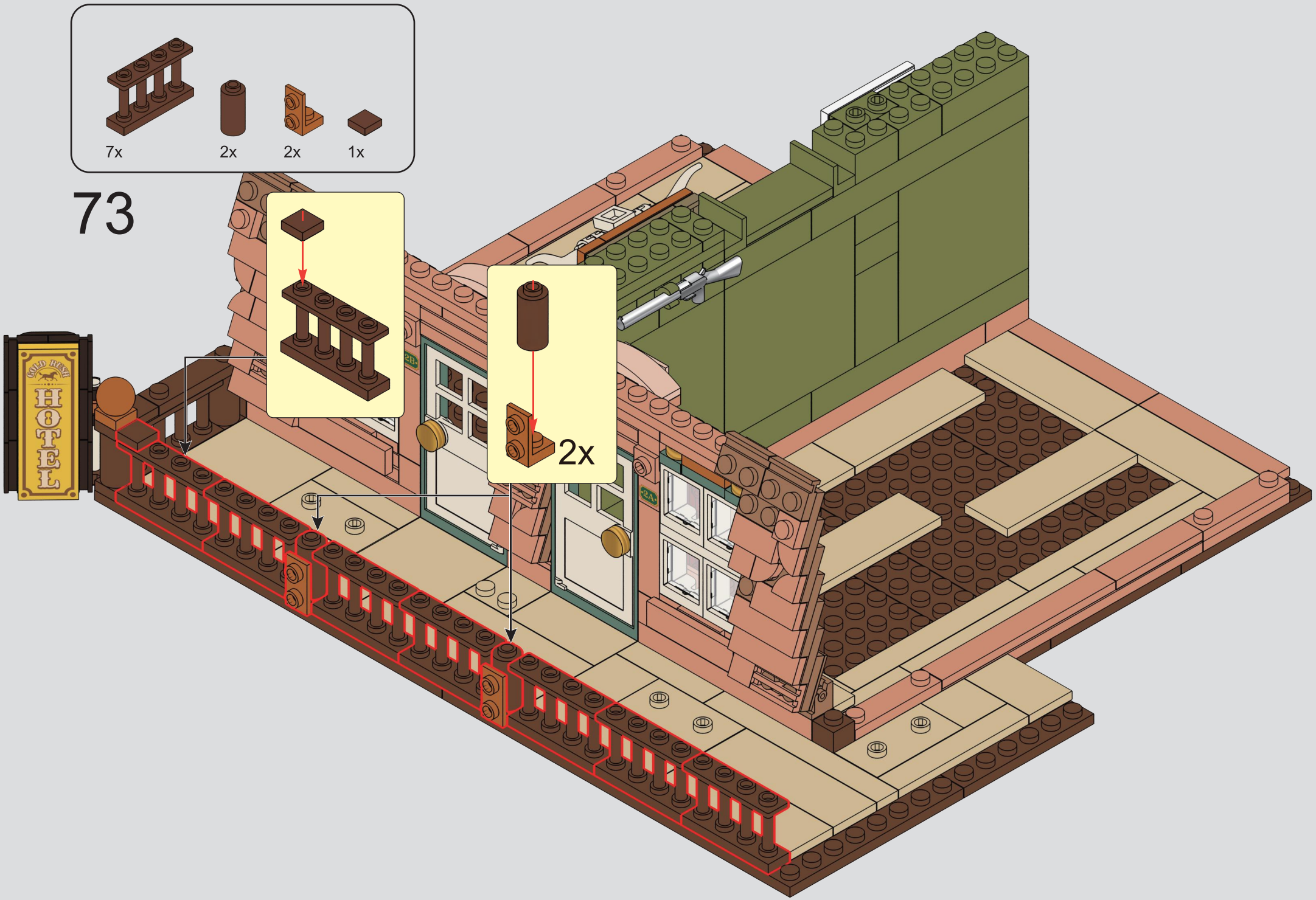
7x
2x
2x
1x
73
2x
HOTEL

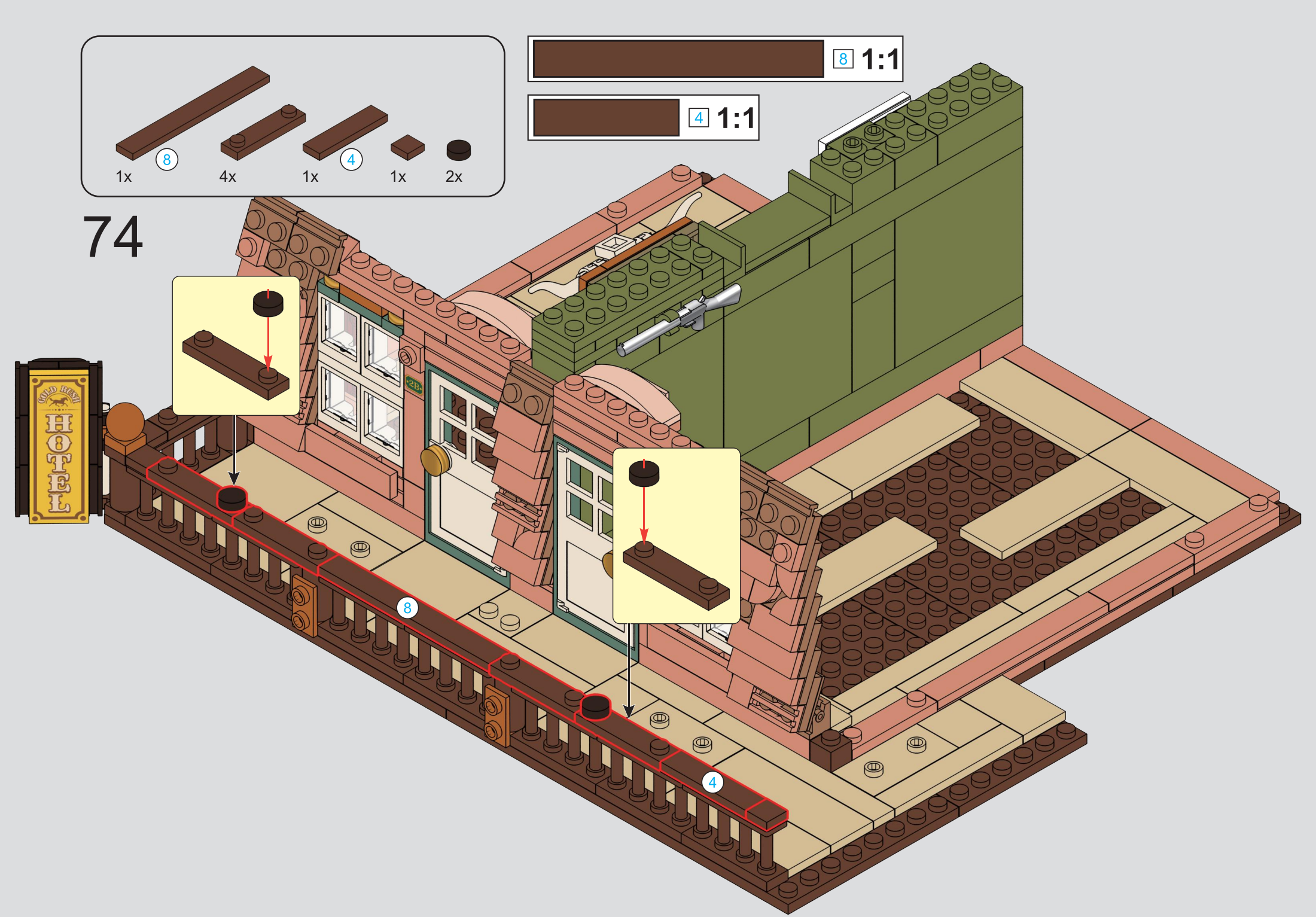
8
1x
4x
4
1x
2x
8 1:1
4 1:1
74
HOTEL
8
4

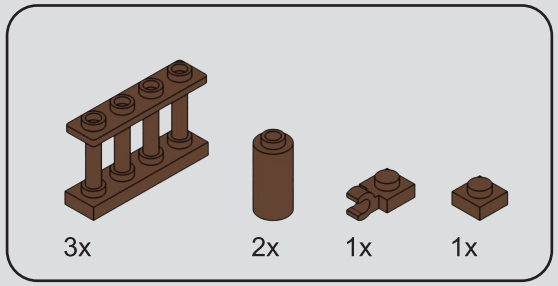

75

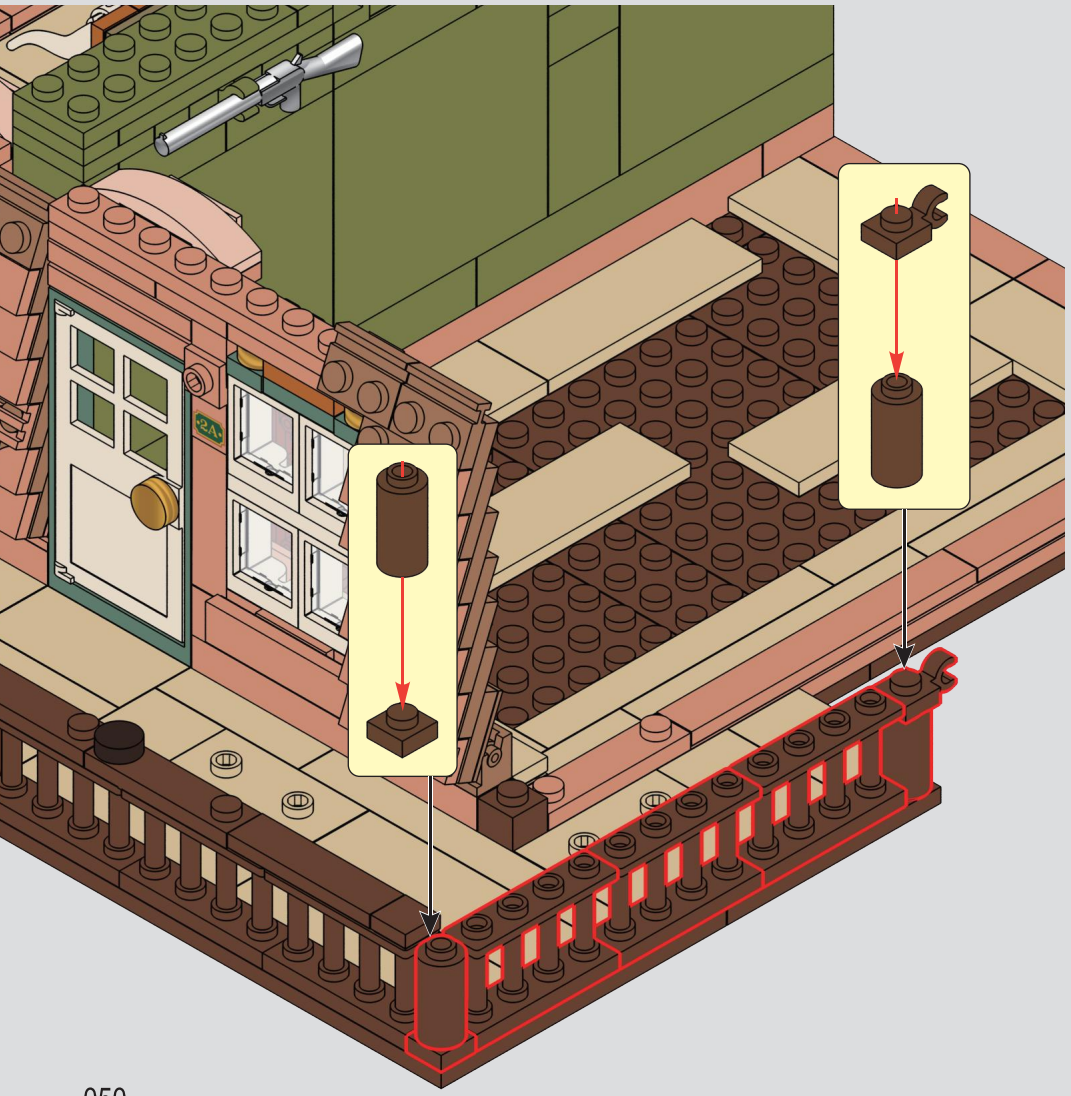

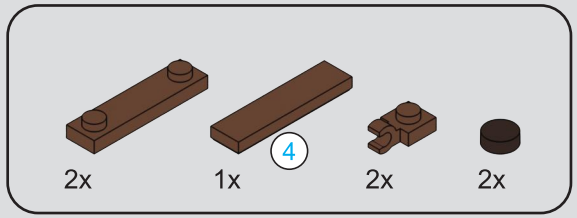

76

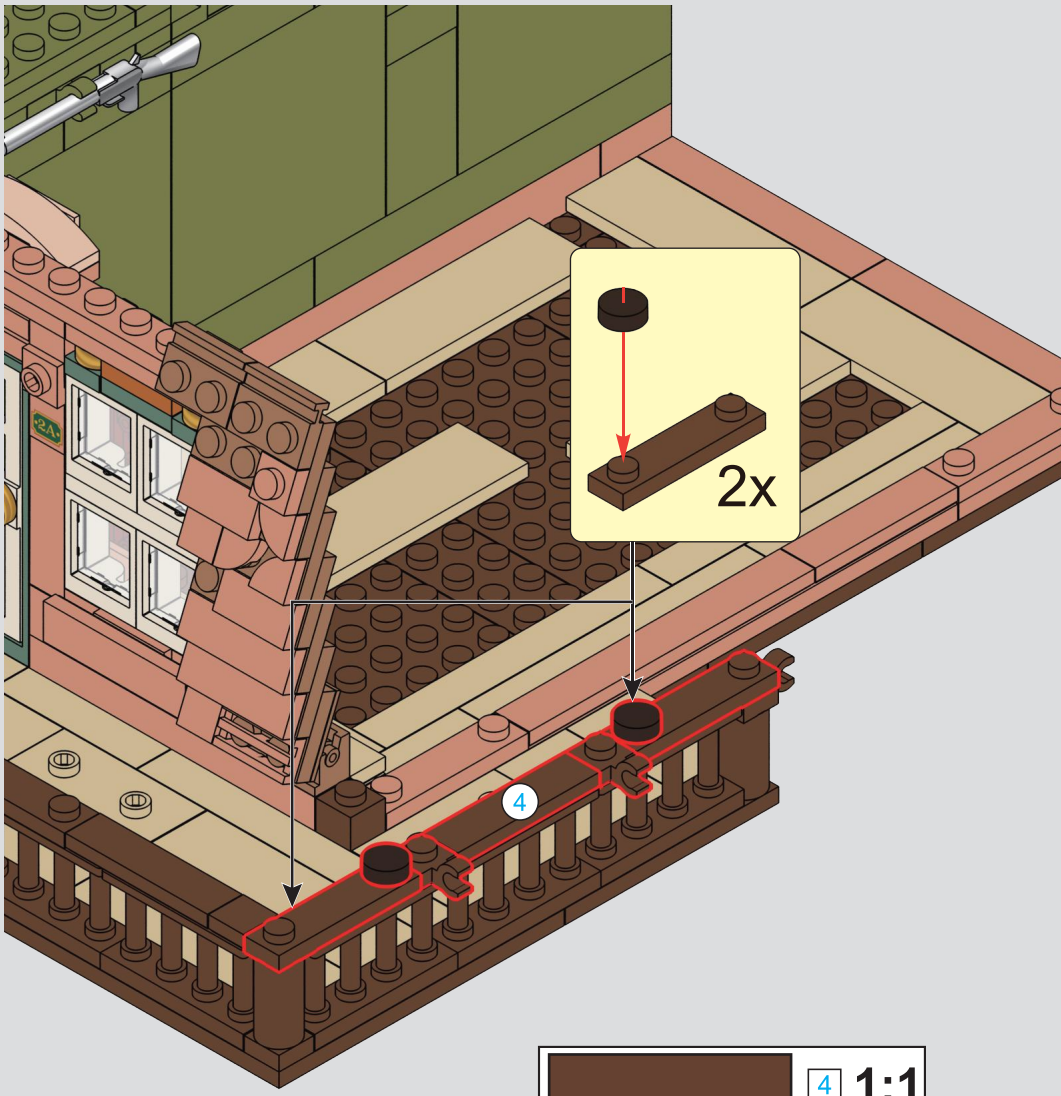

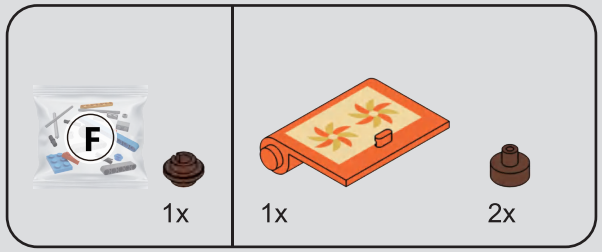

77

1

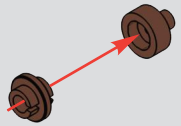

2

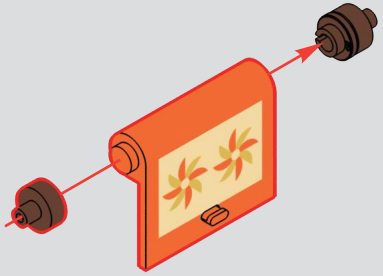

78

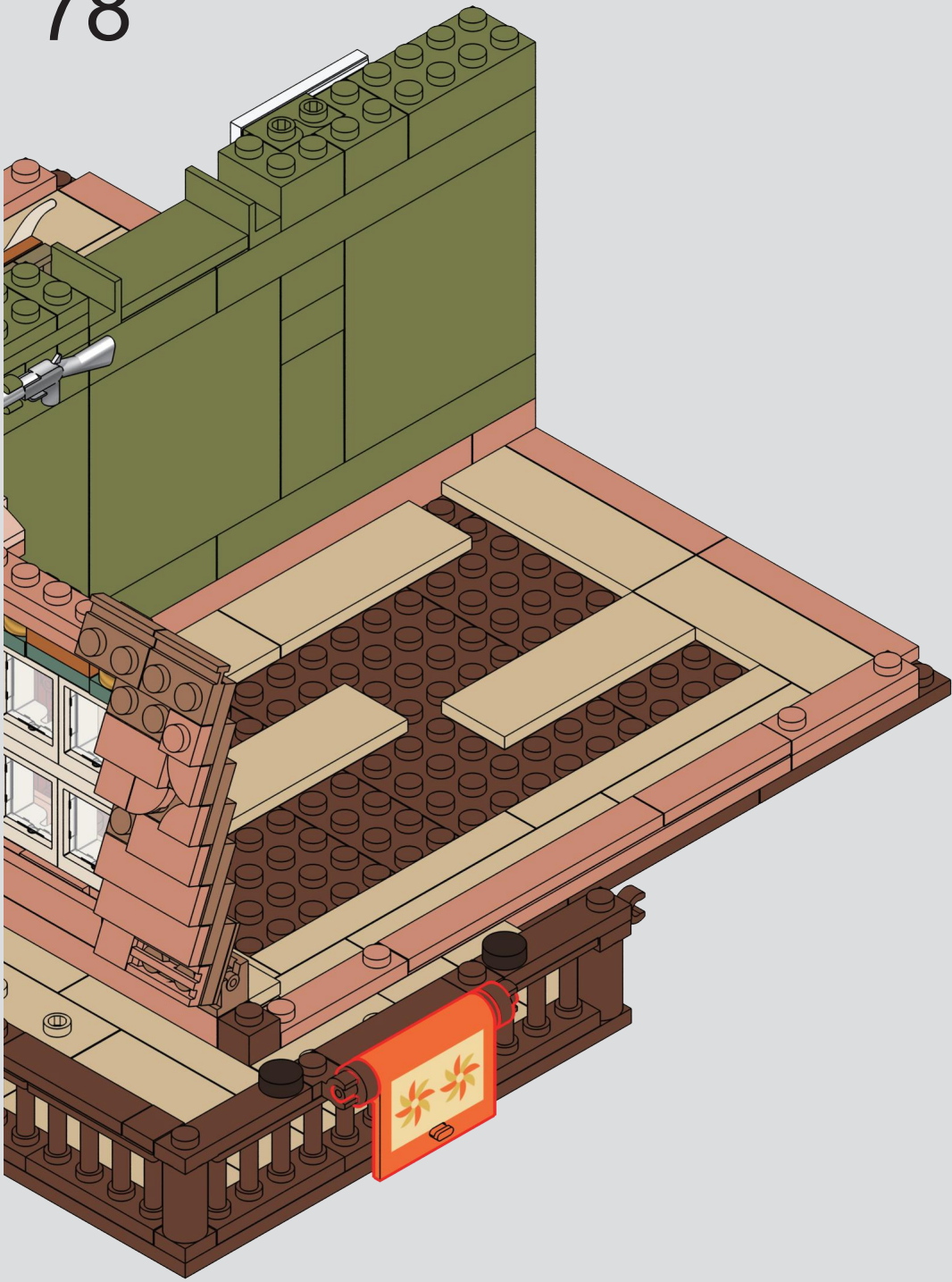

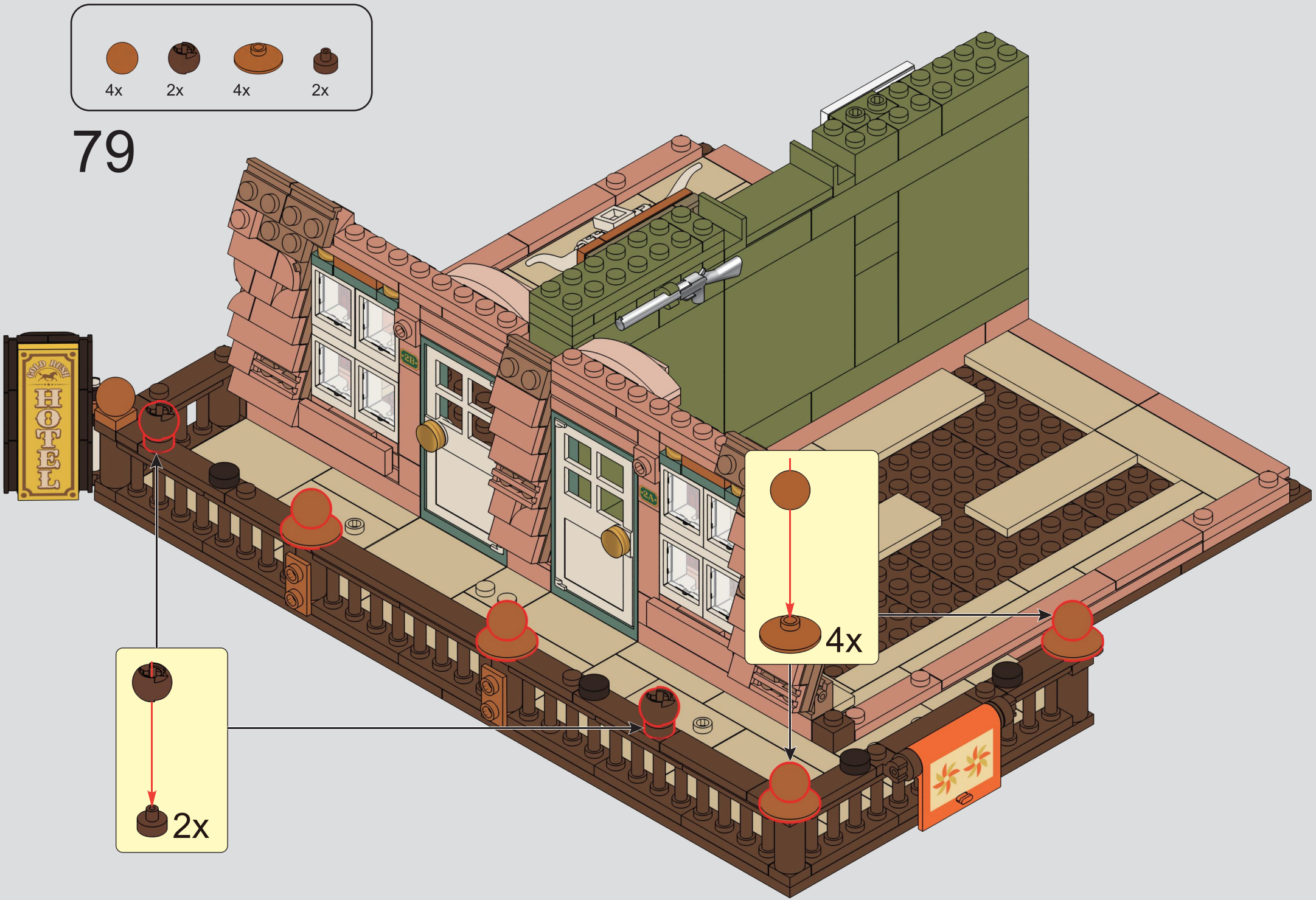
4x
2x
4x
2x
79
HOTEL
4x
2x

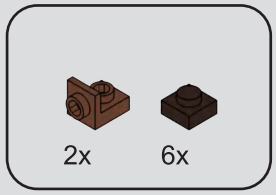

80



81

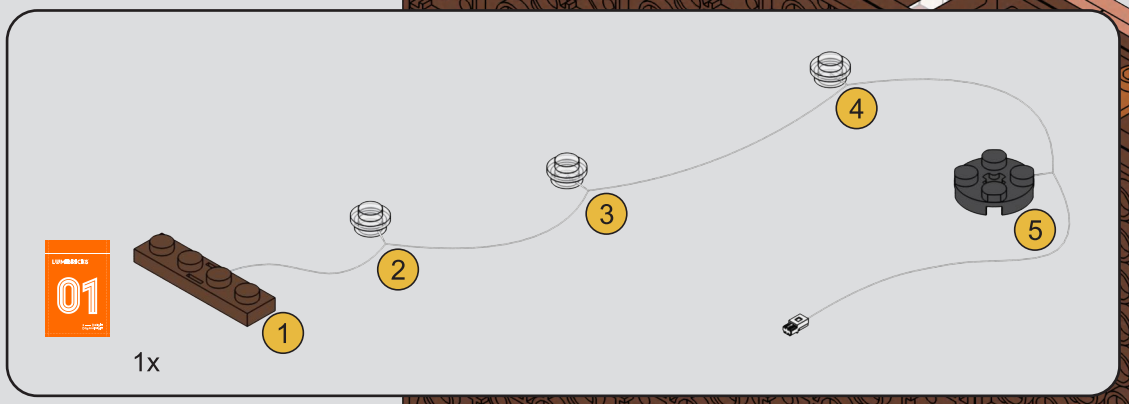

82

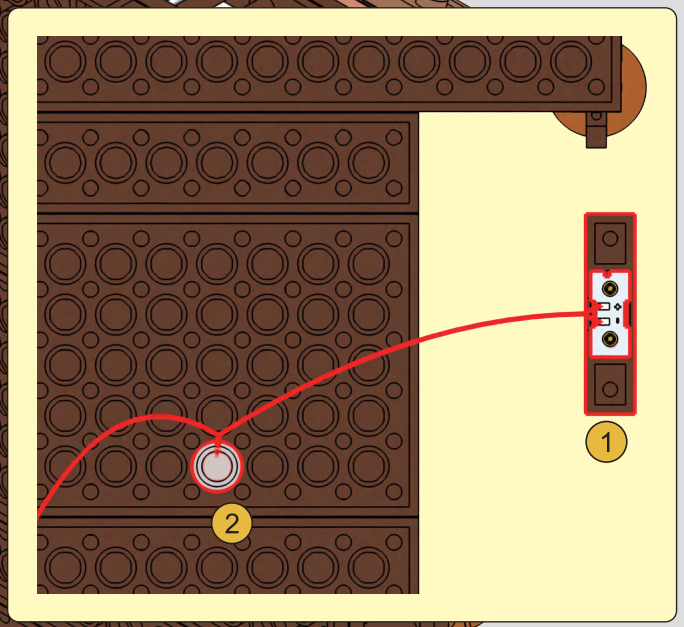

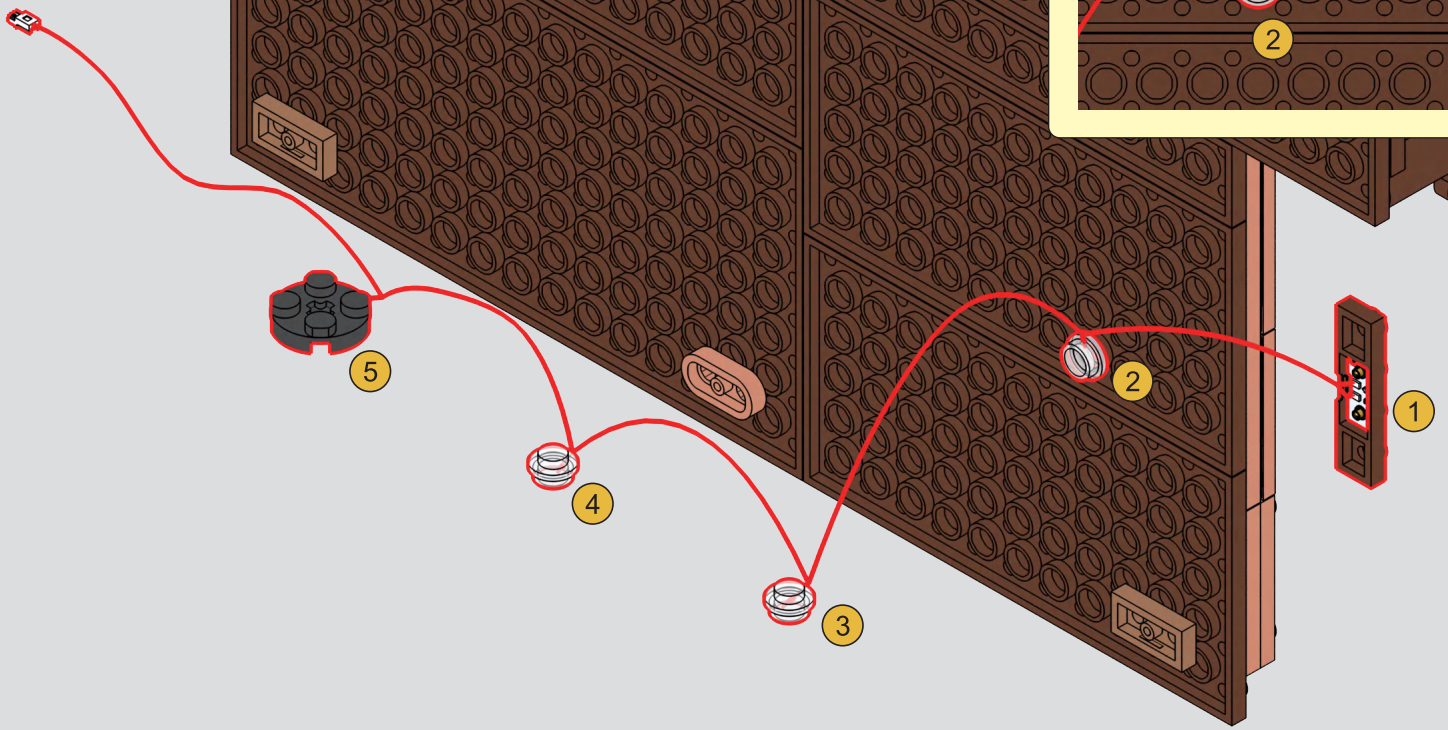

83

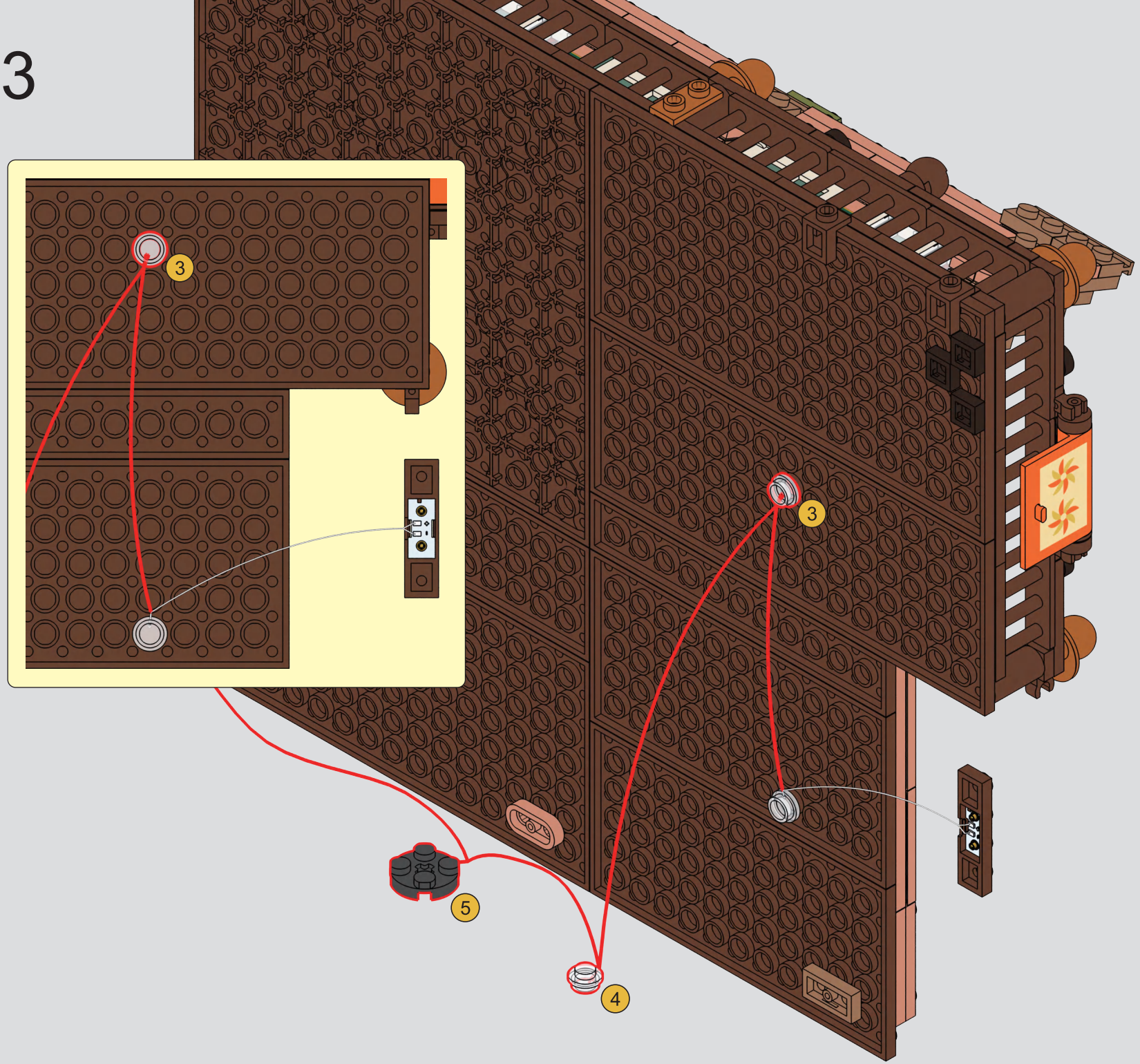

84

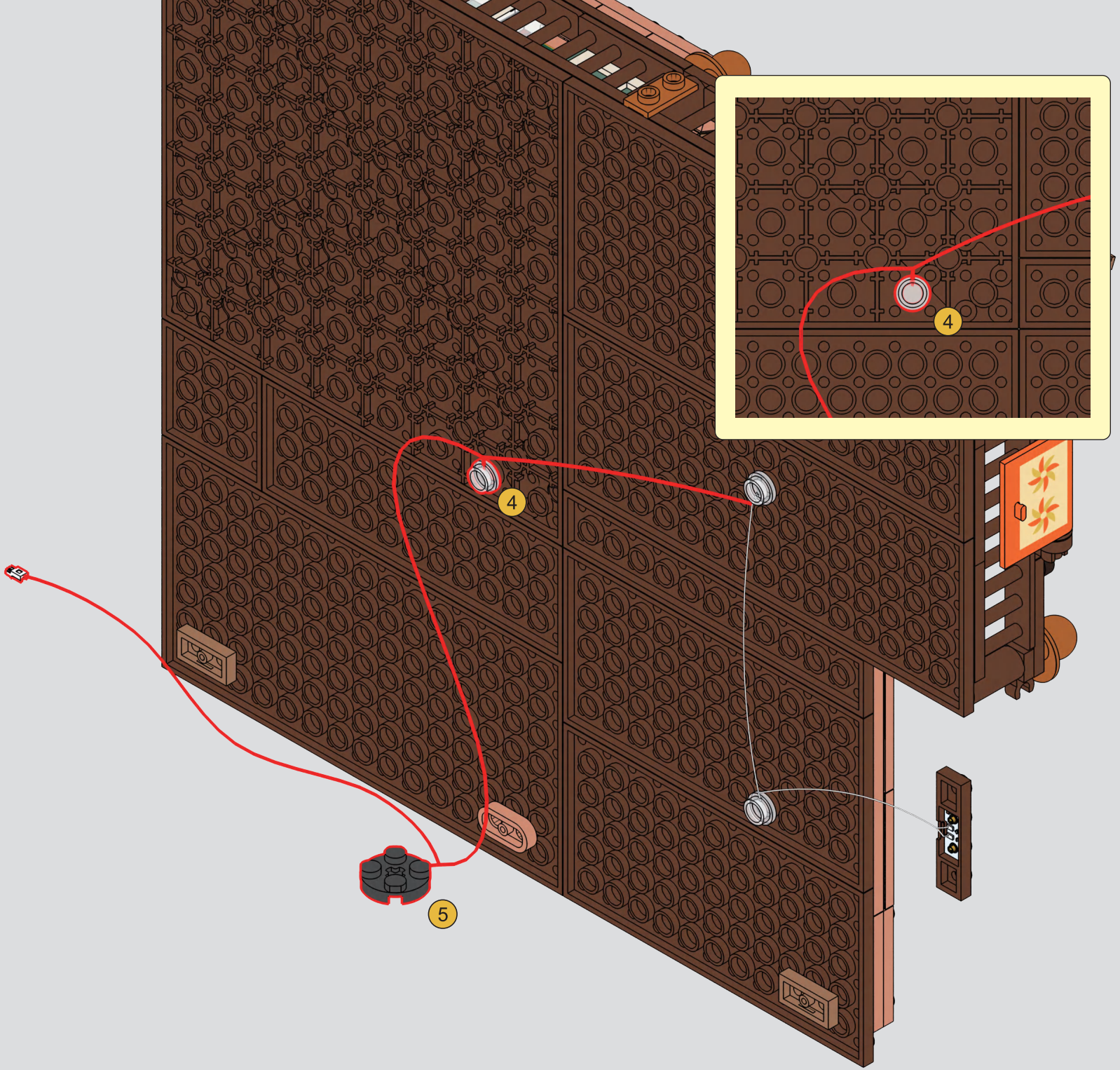

85

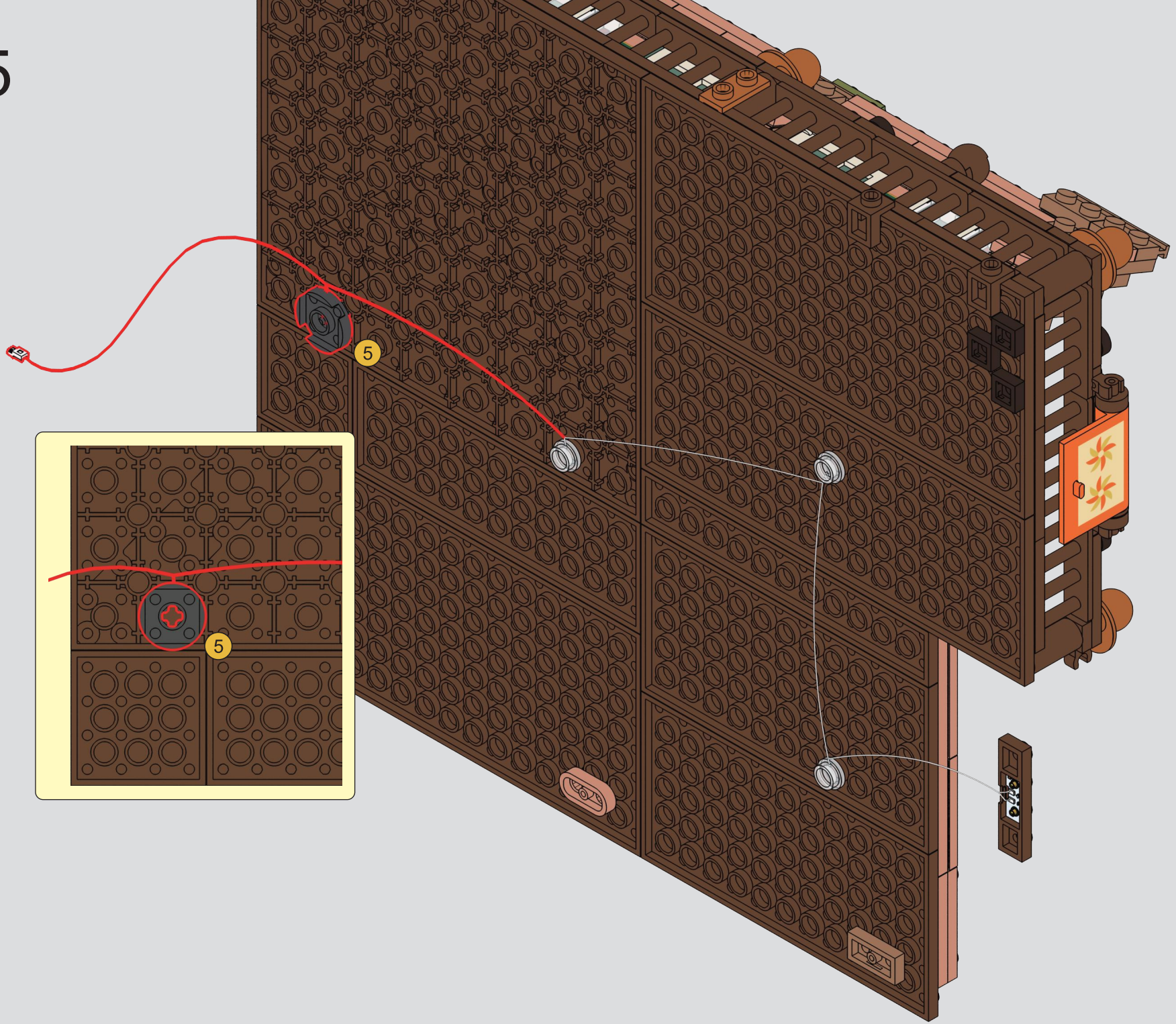

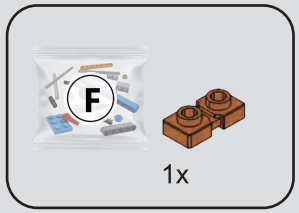

86

1

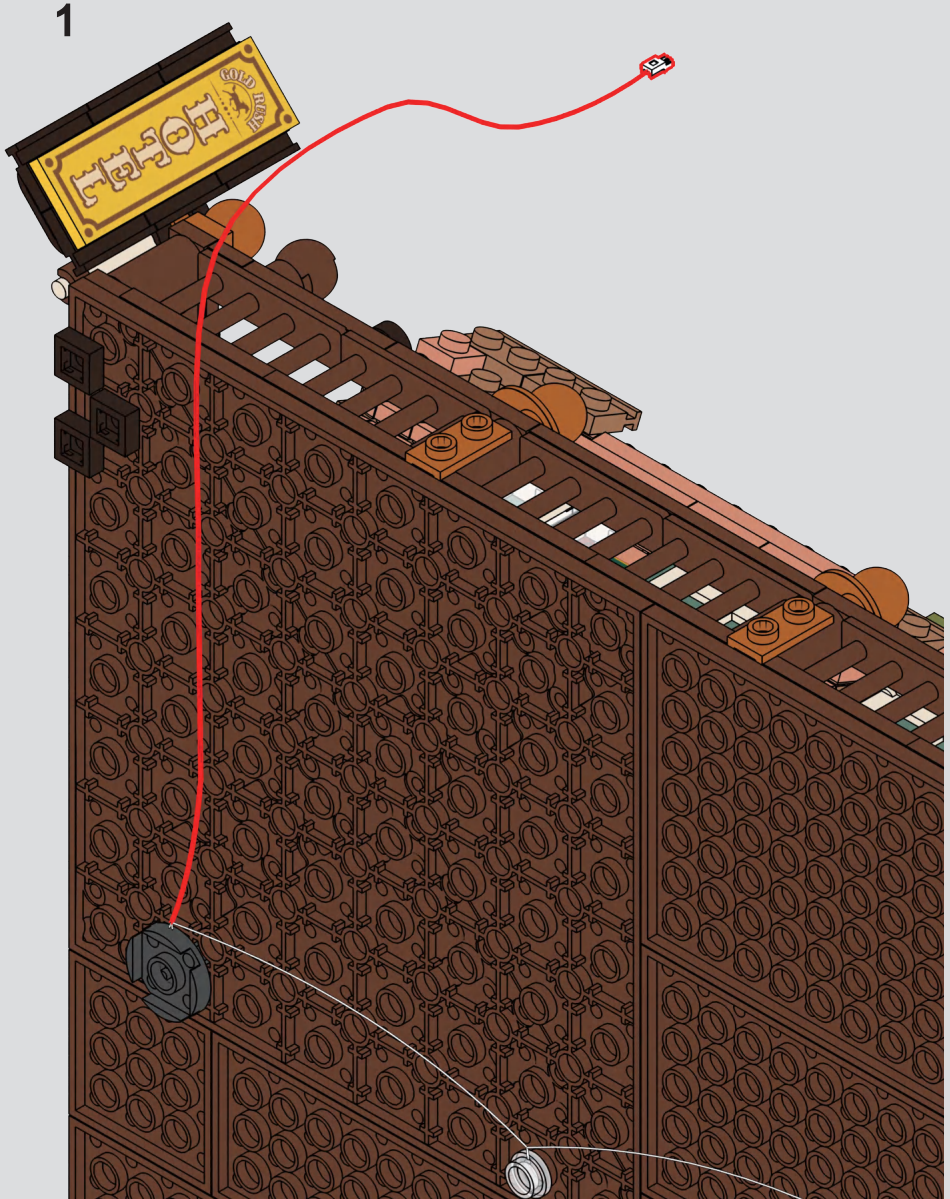

2

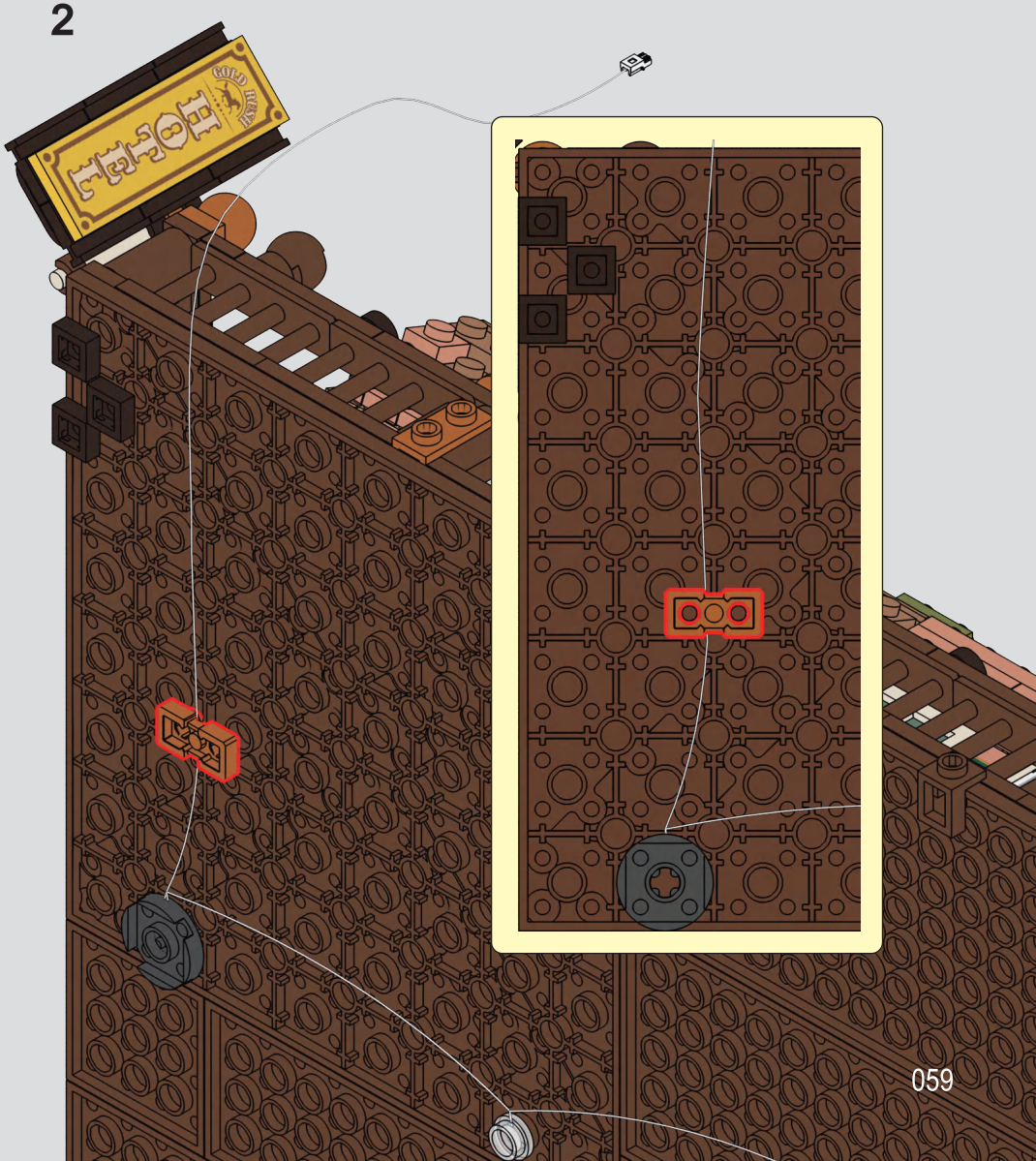

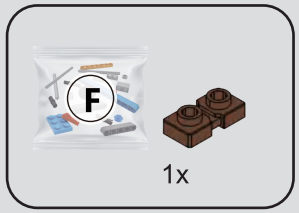

87

1

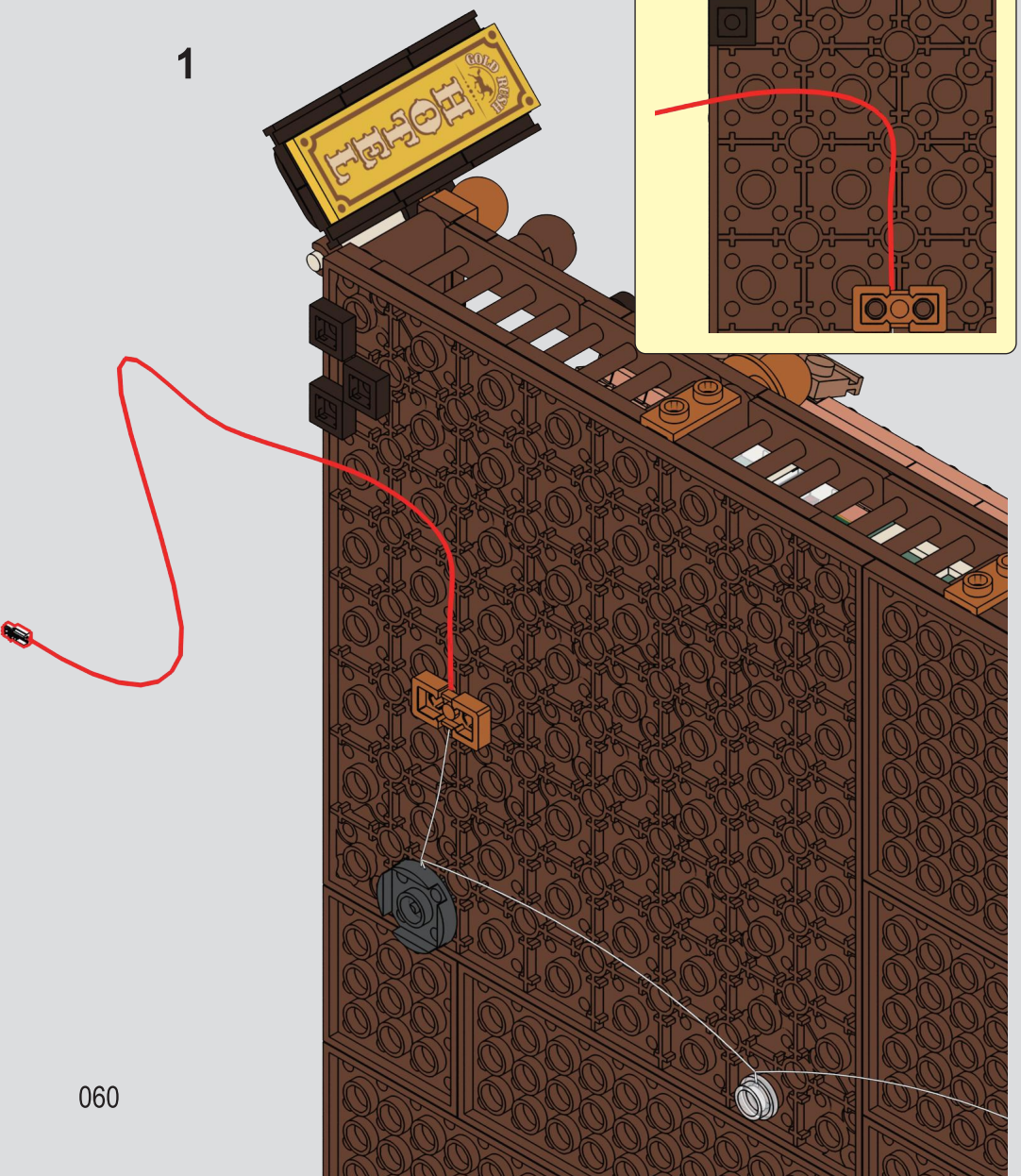

2




9


F

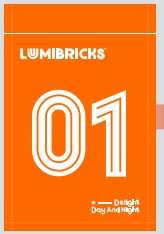
LUMIBRICKS
01

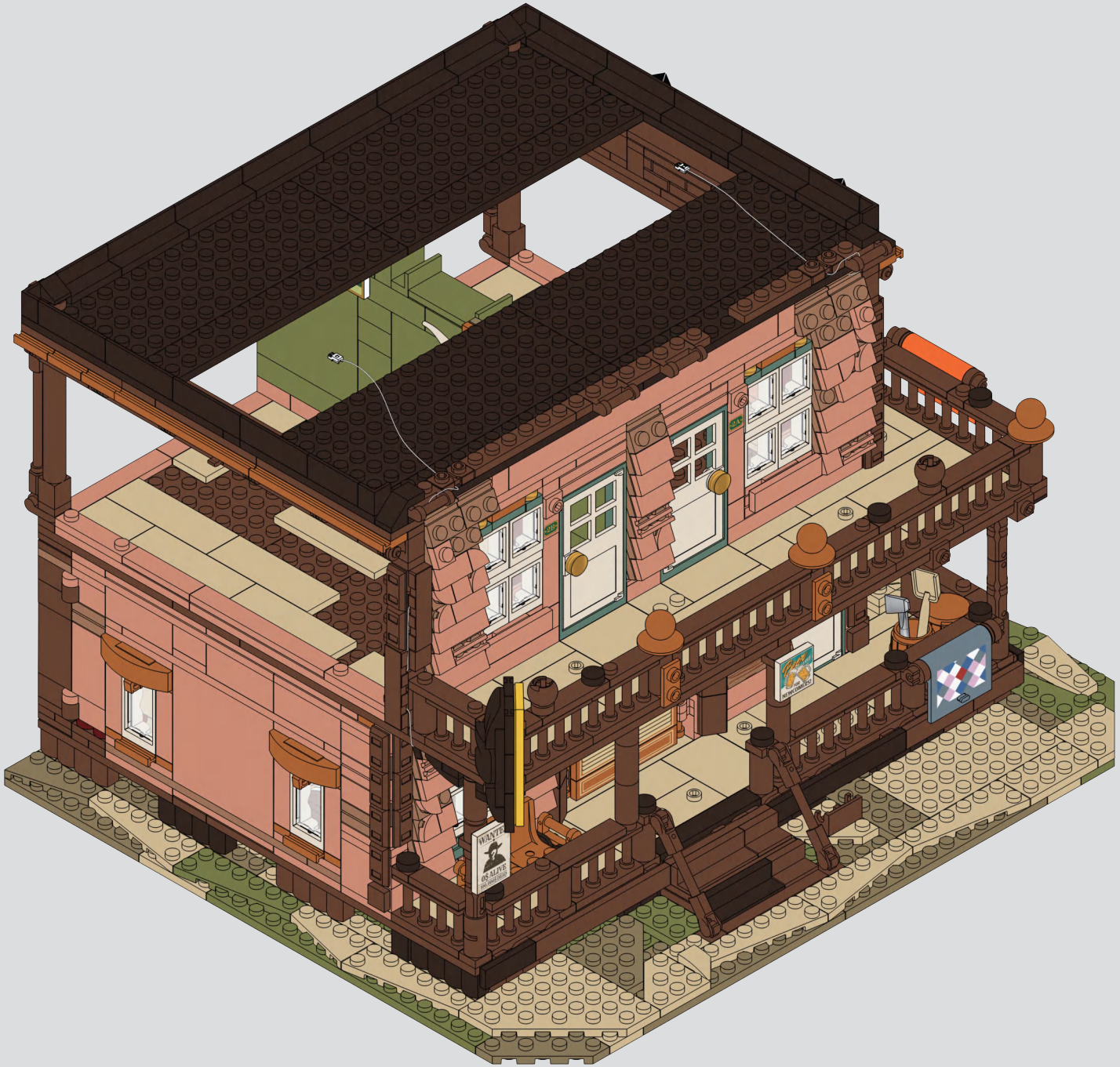

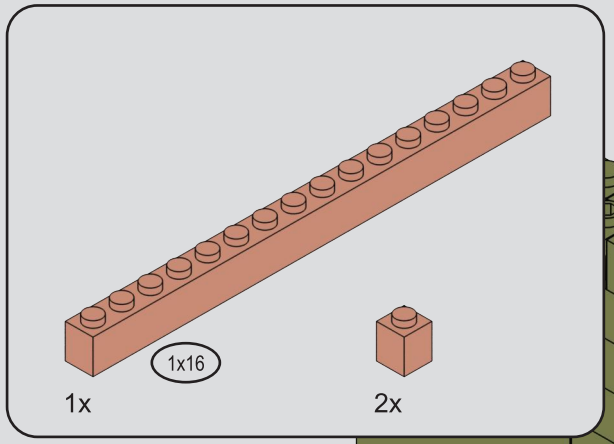

88

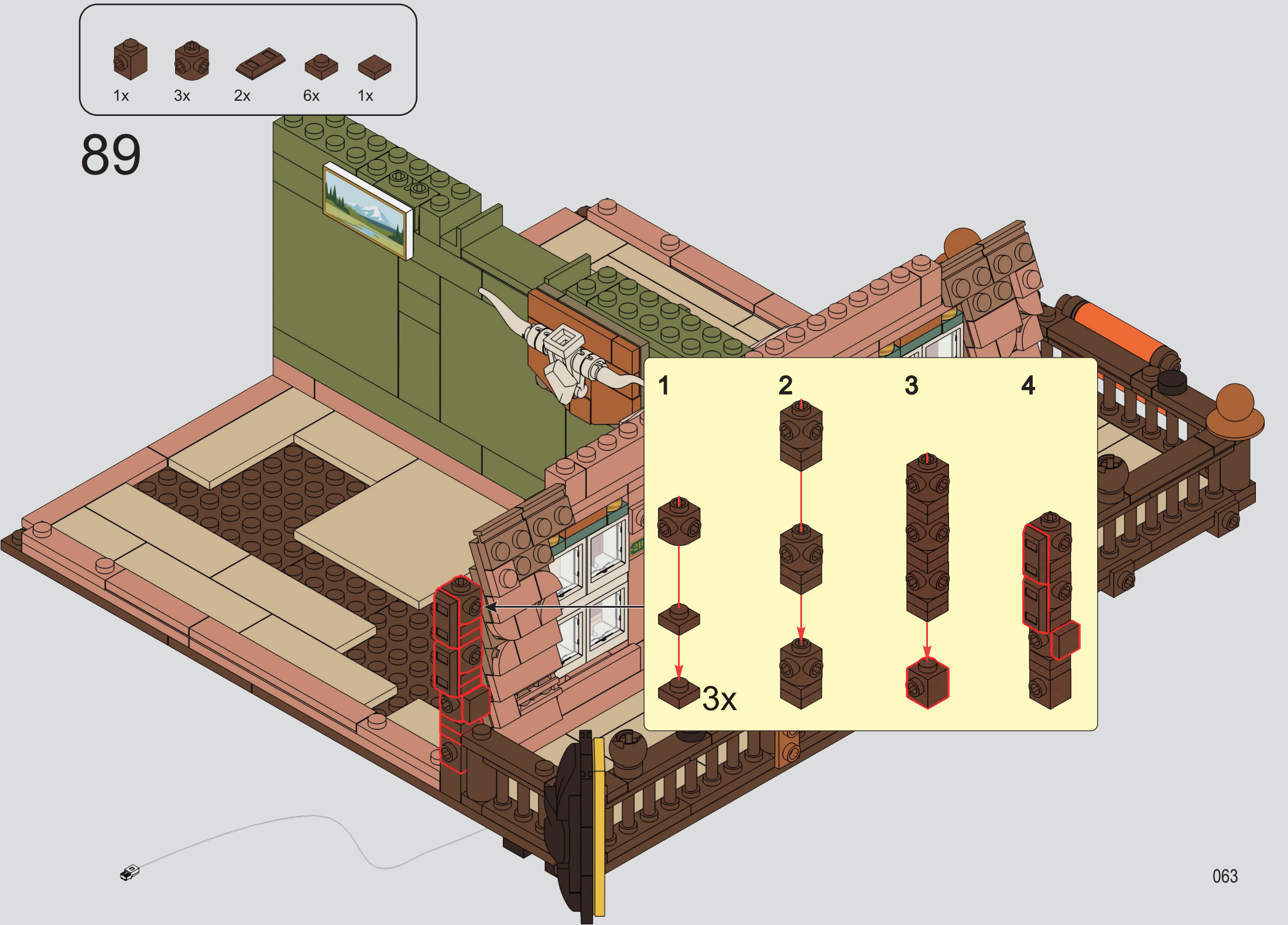
1x
3x
2x
6x
1x
89
1
2
3
4
3x

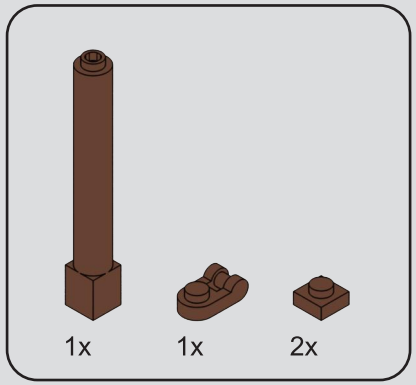

90

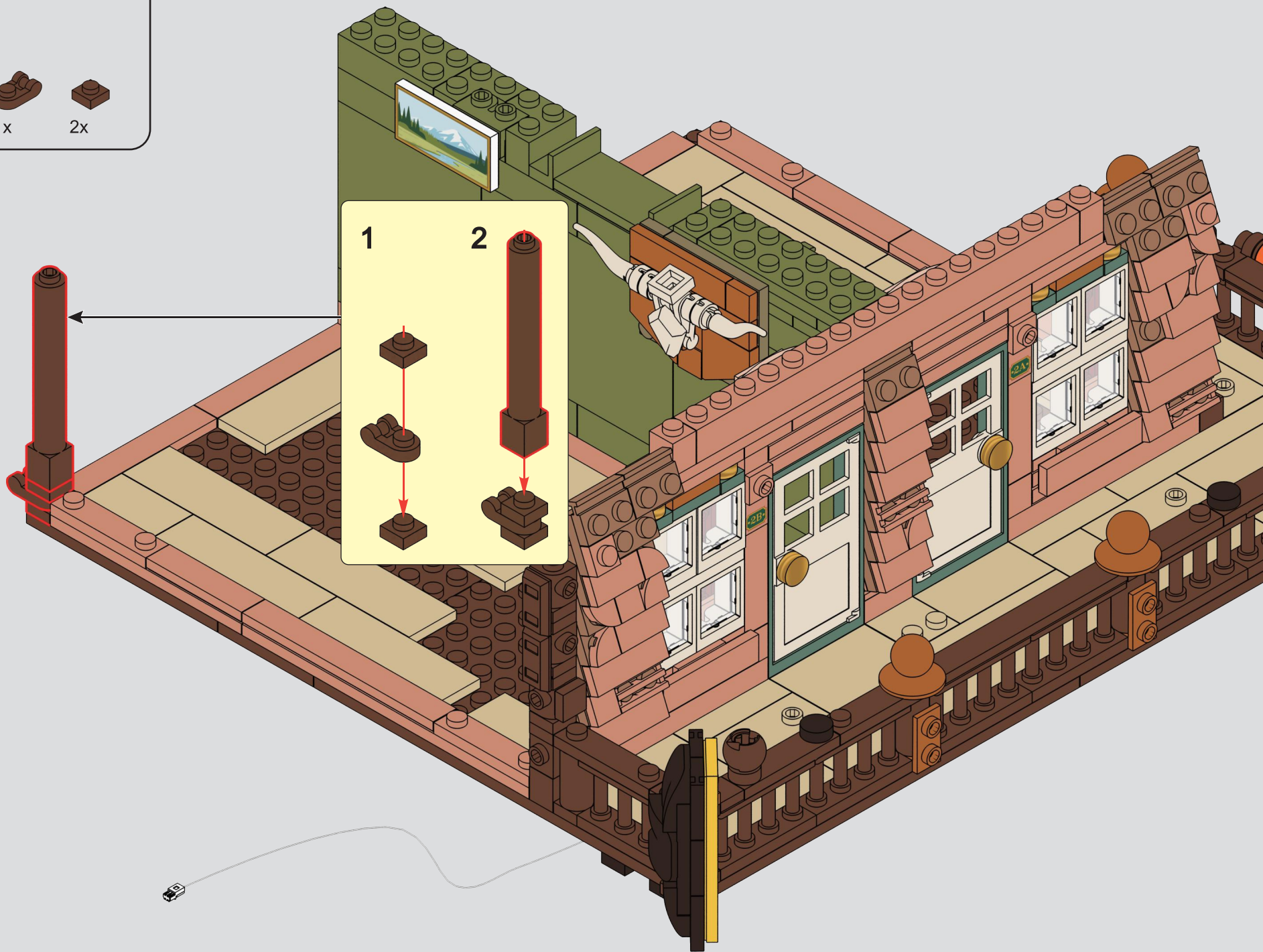

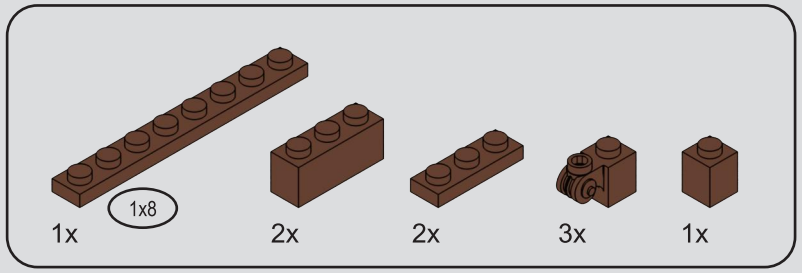

91

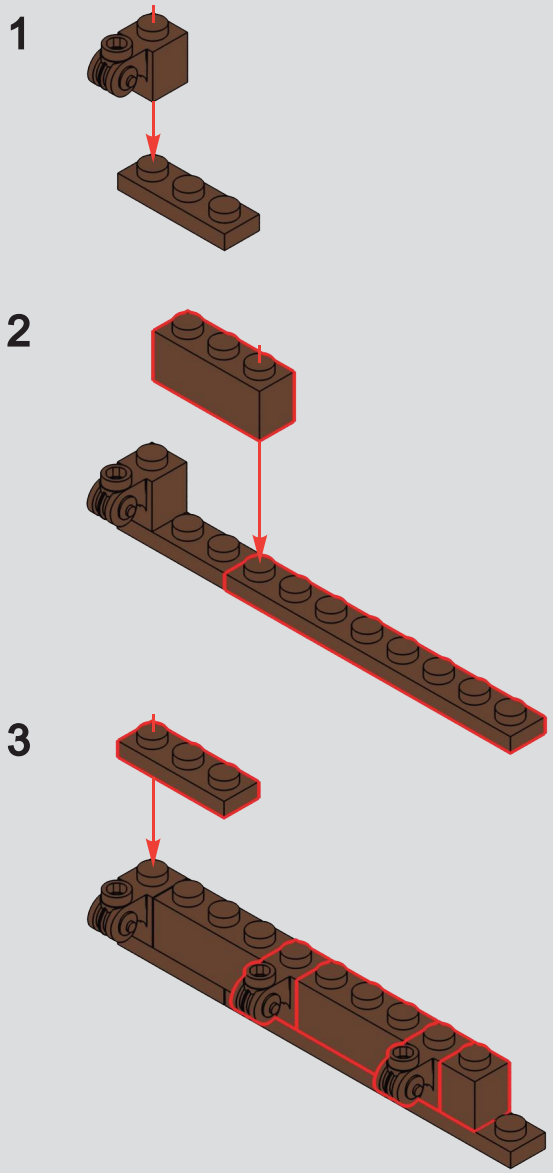

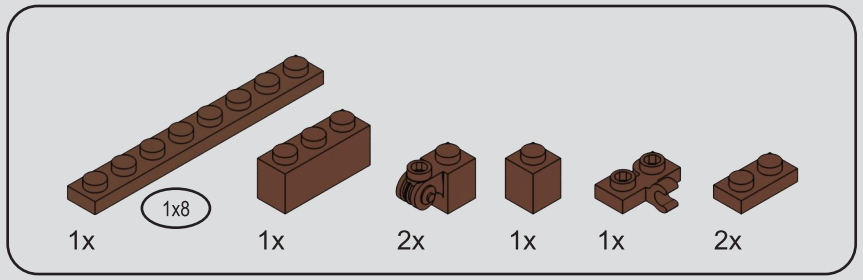

92

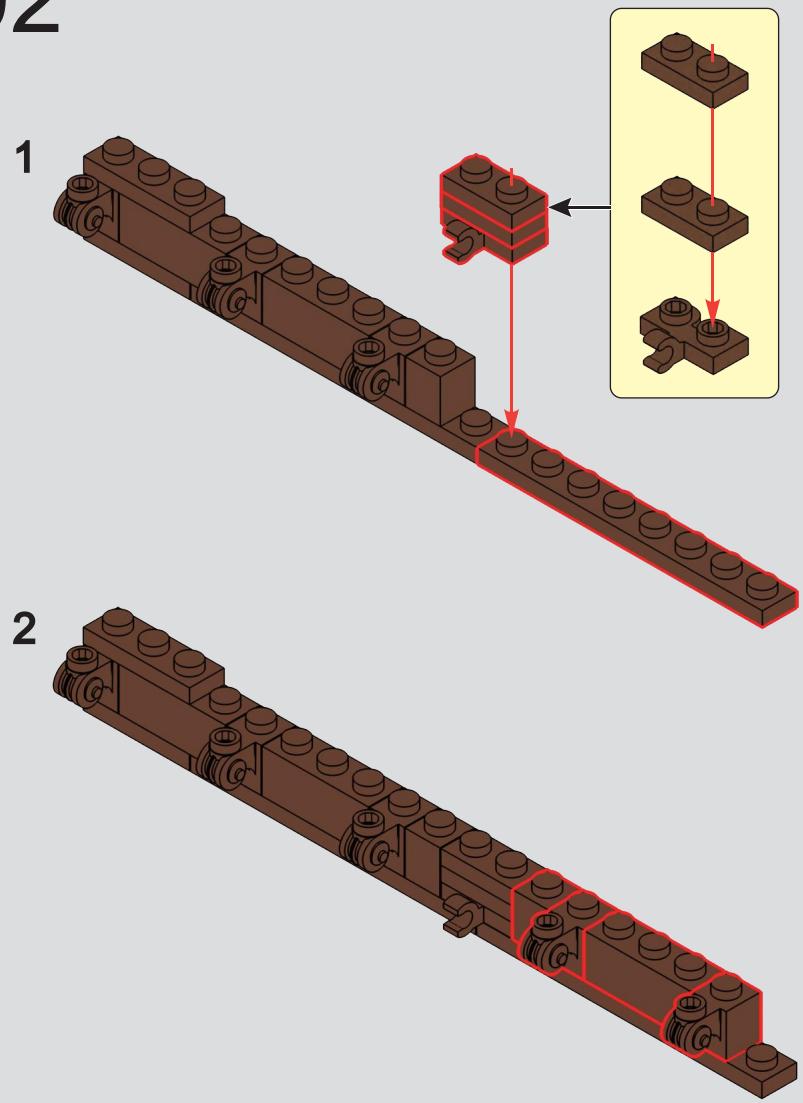

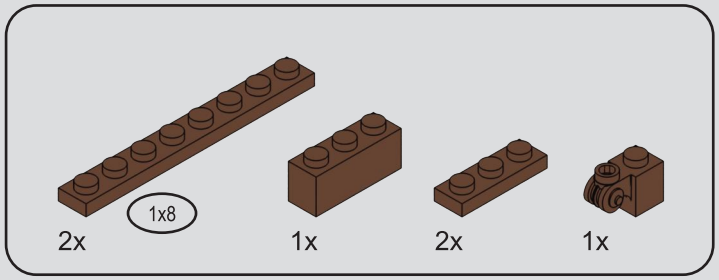

93

1

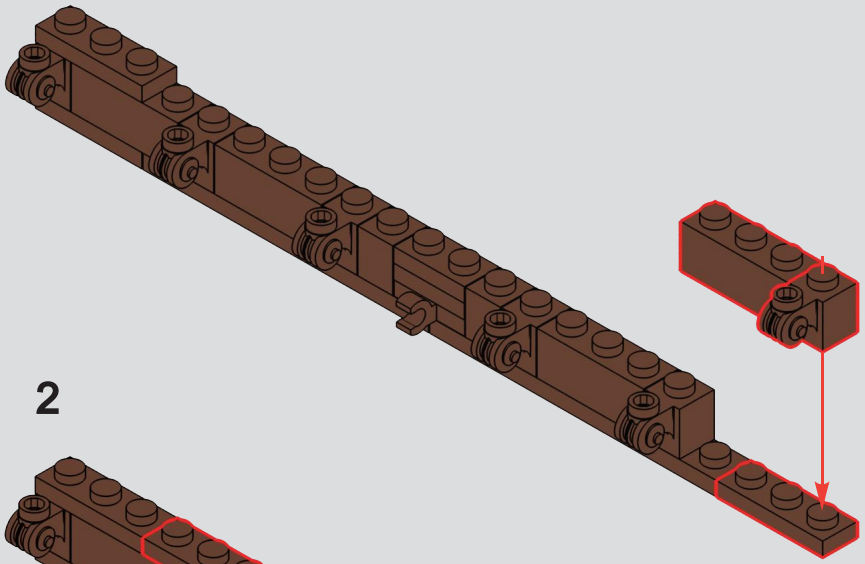

2

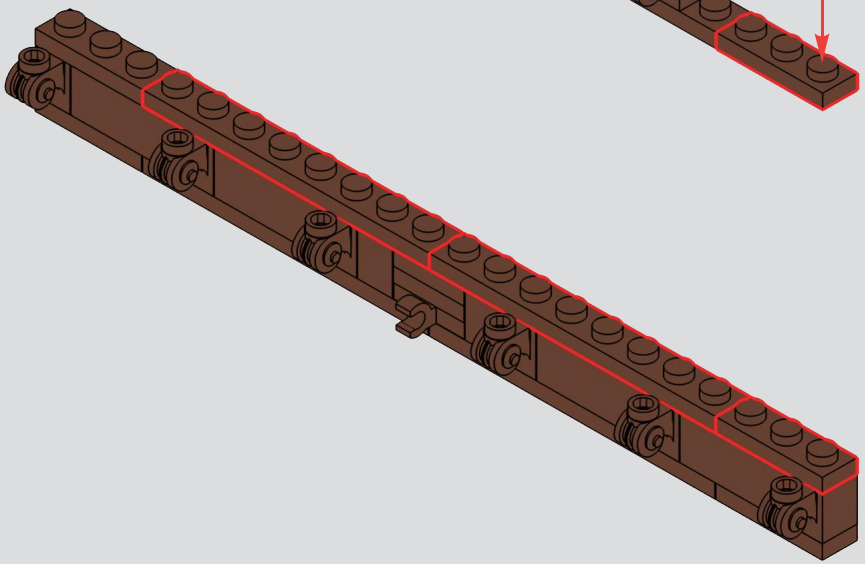

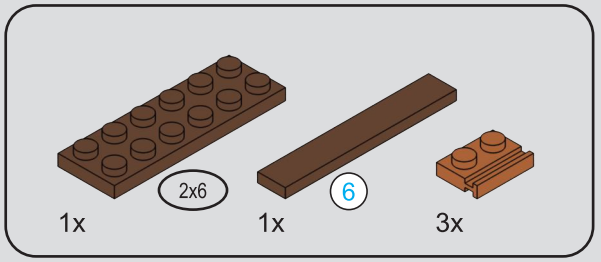

94

1

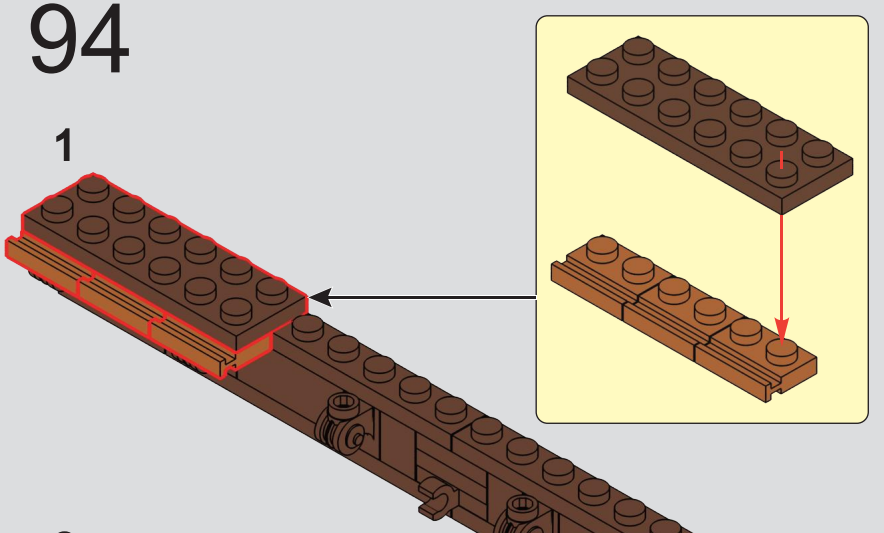

2

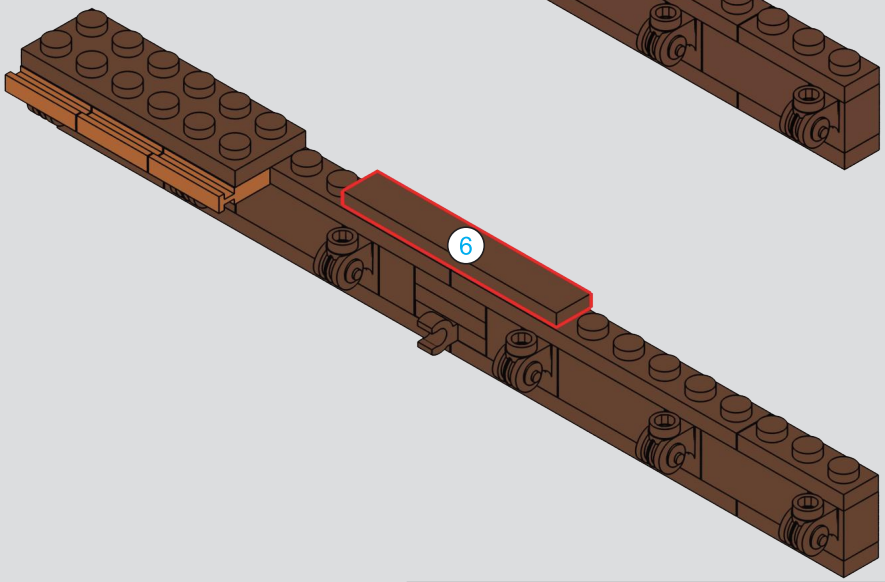



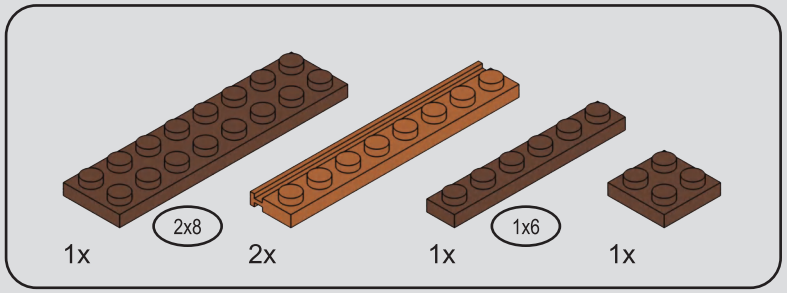

95

1

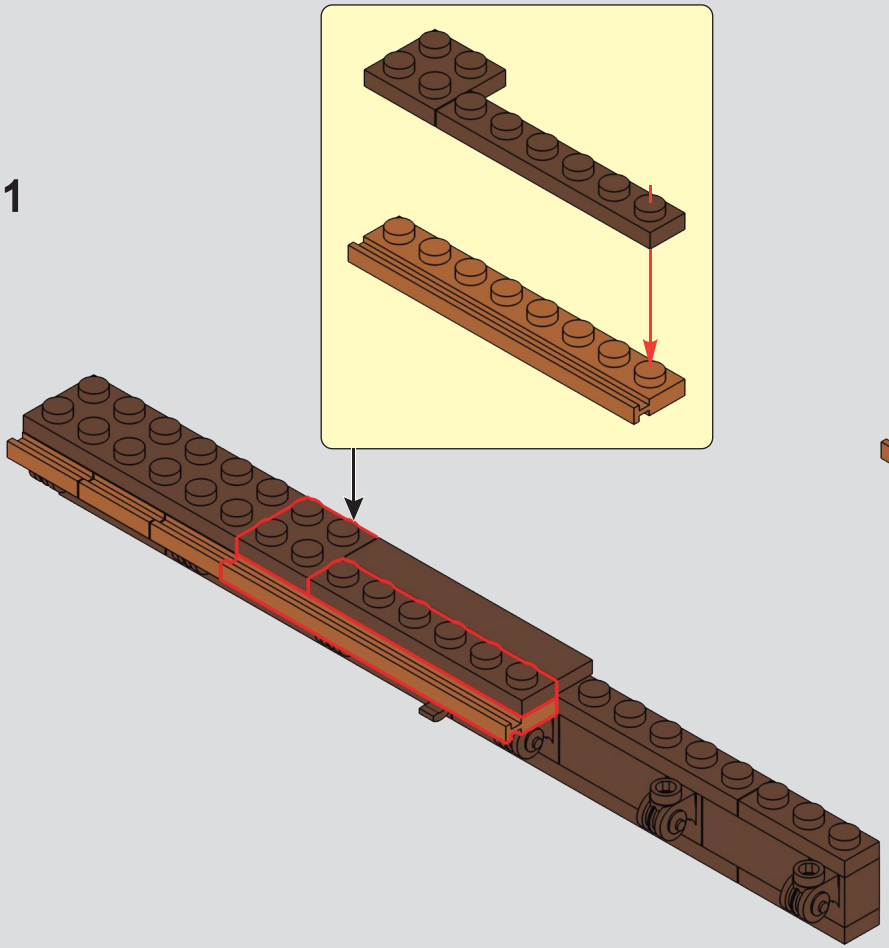

2

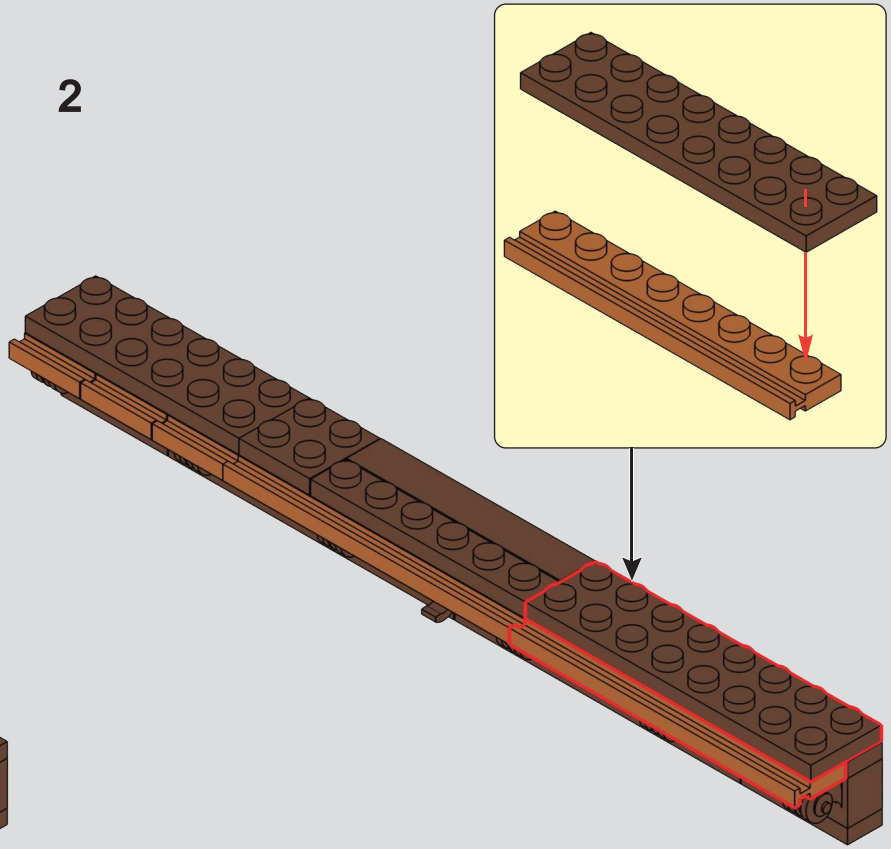

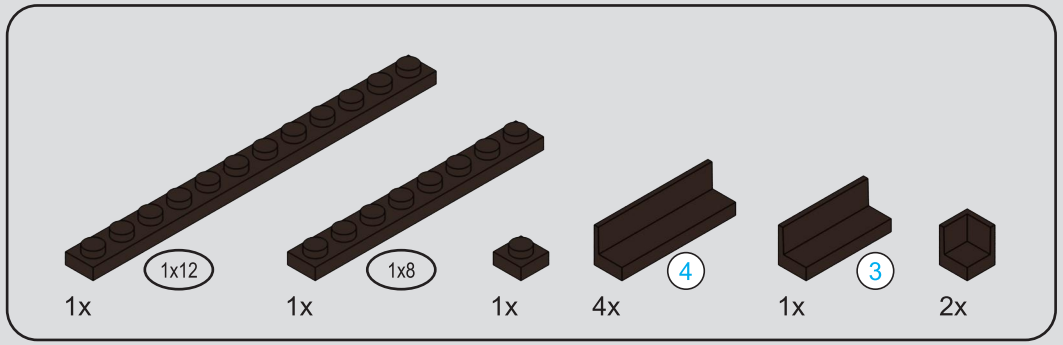

96

1

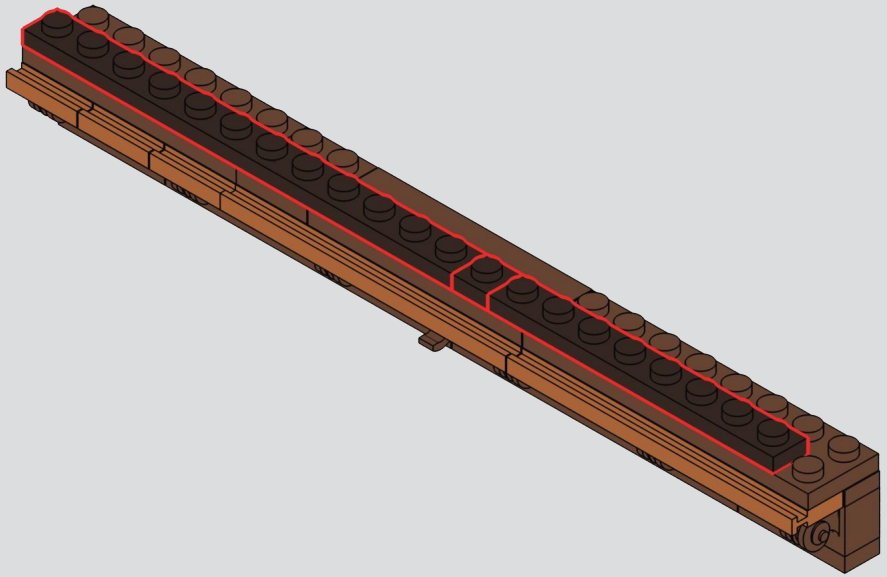

2

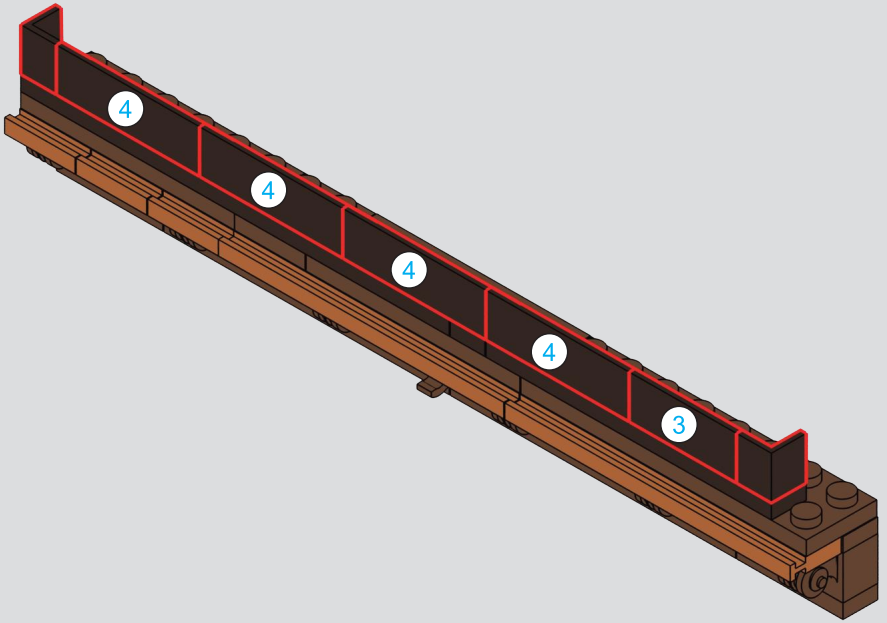

97

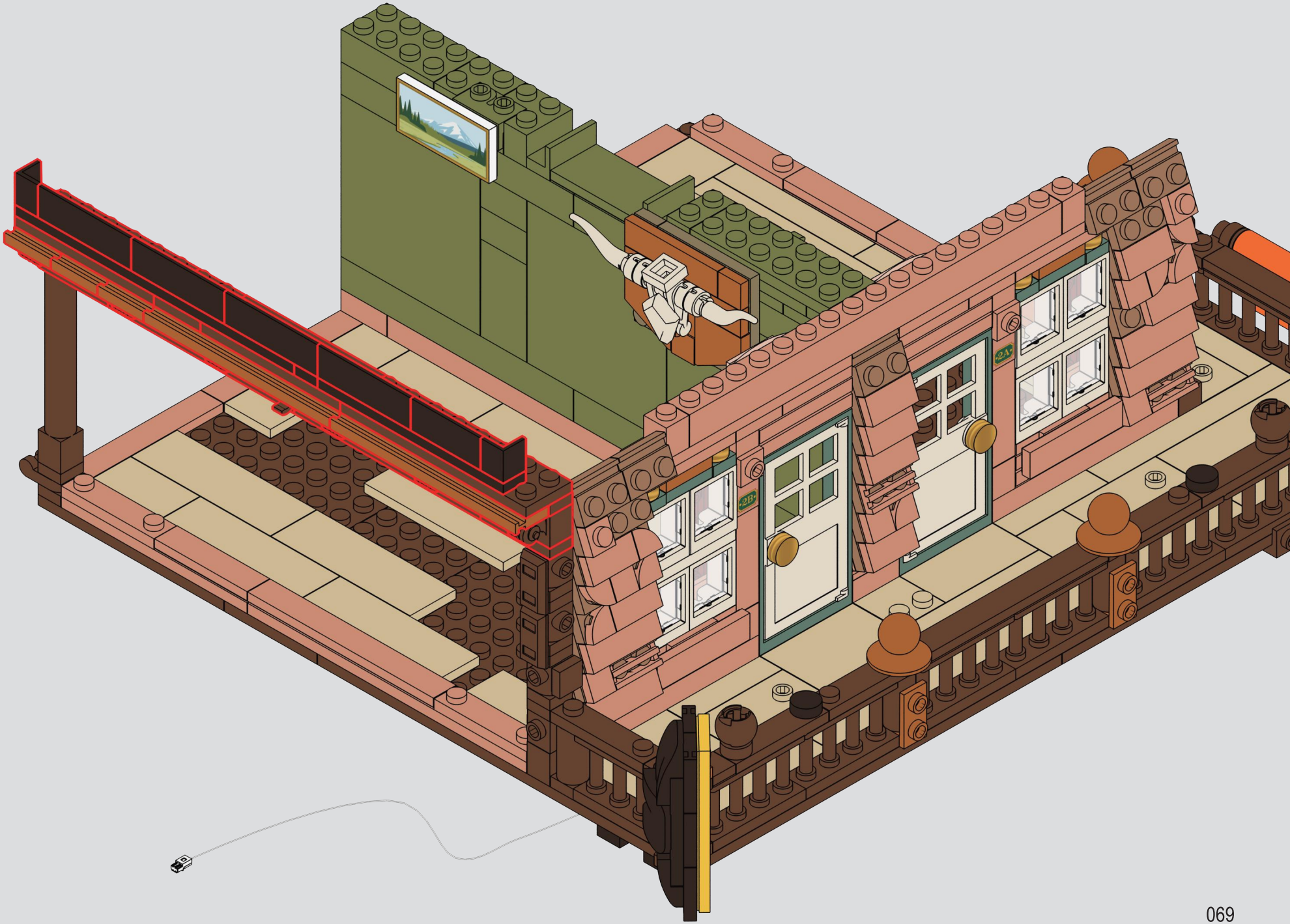

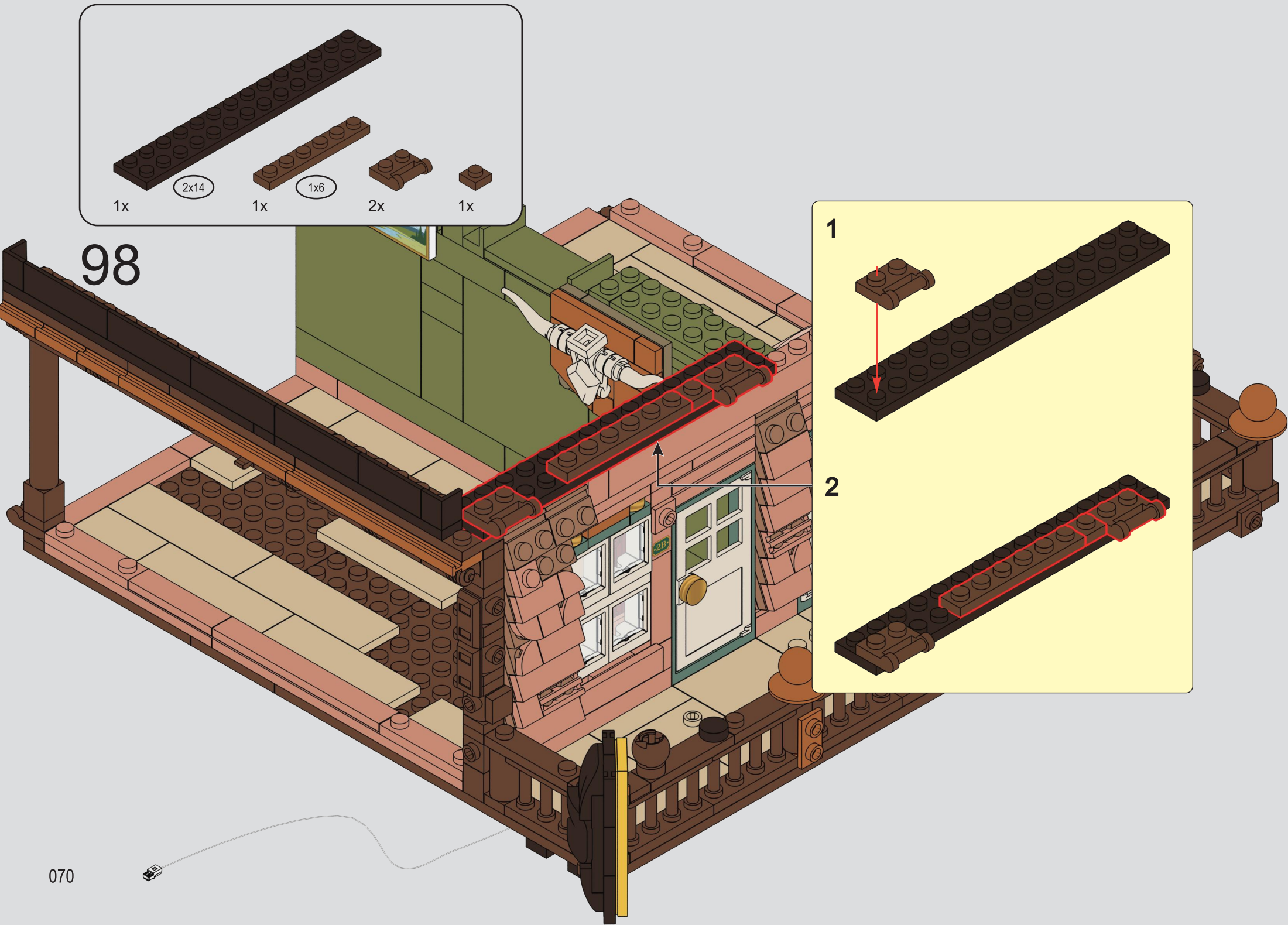
1x
2x14
1x
1x6
2x
1x
98
1
2
070

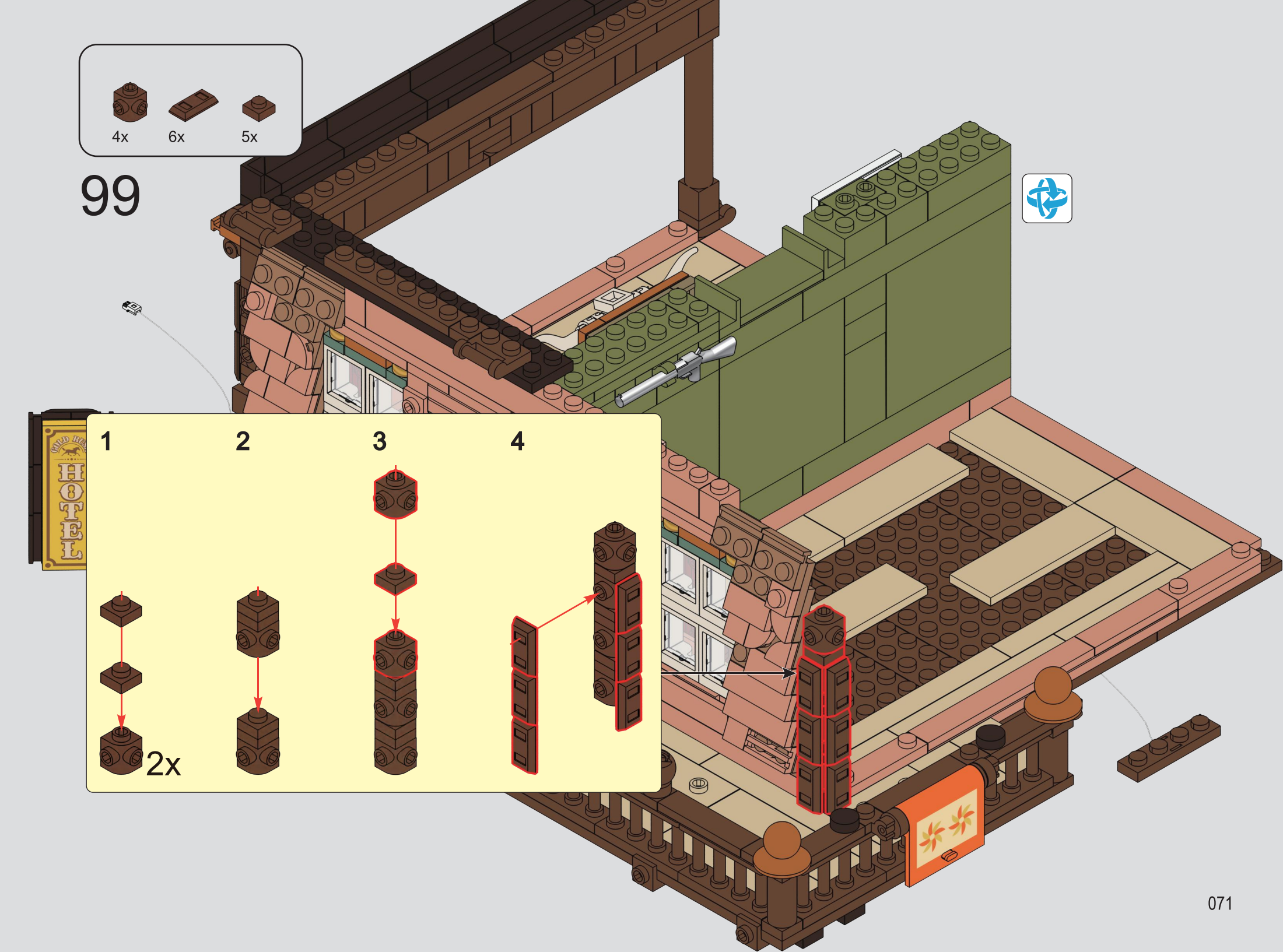
4x
6x
5x
99
1
2
3
4
2x
HOTEL

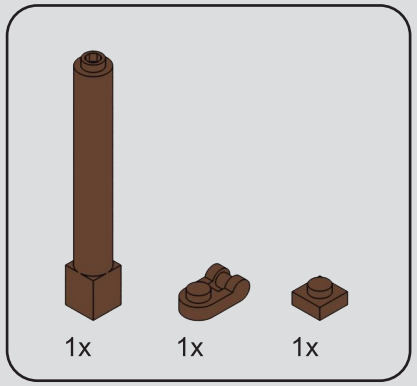

100

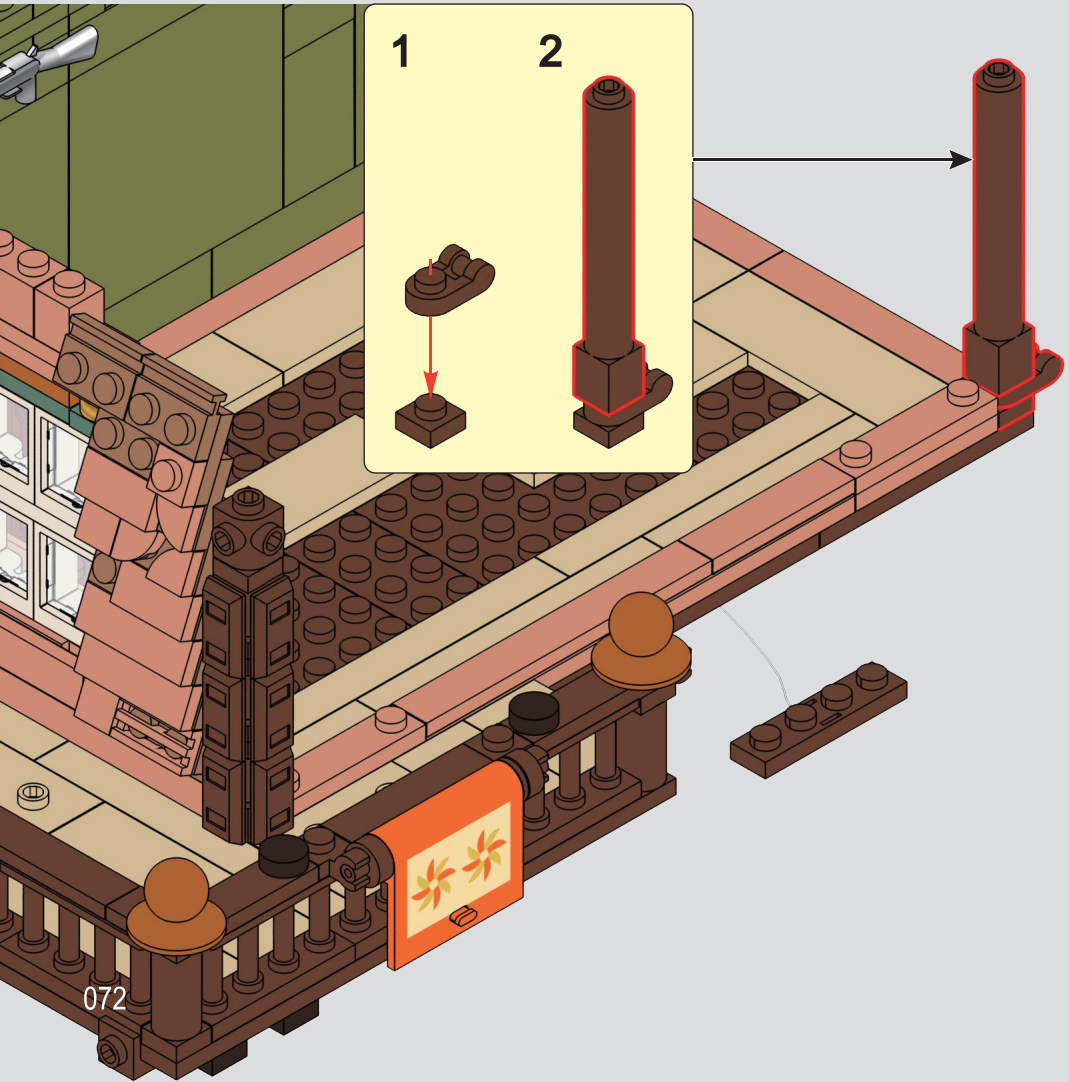

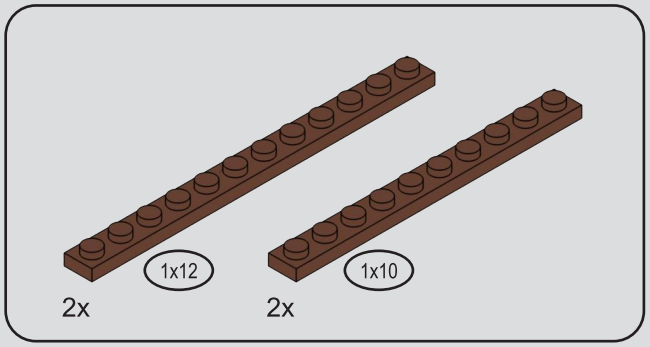

101

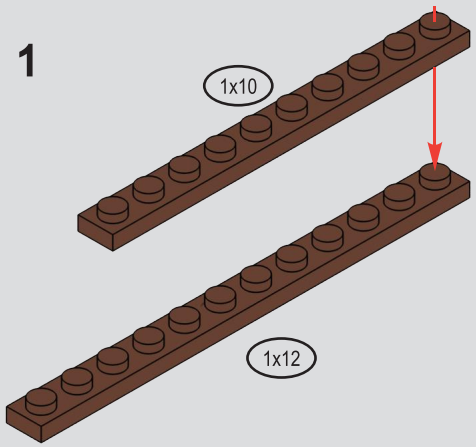

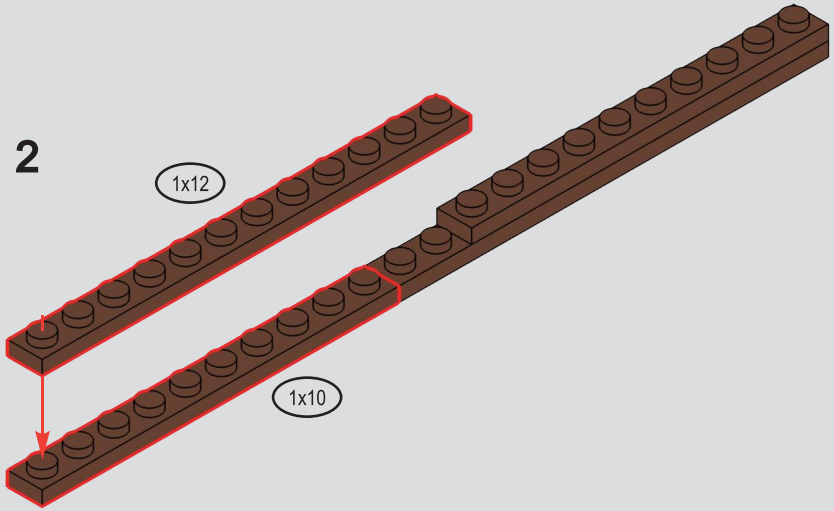

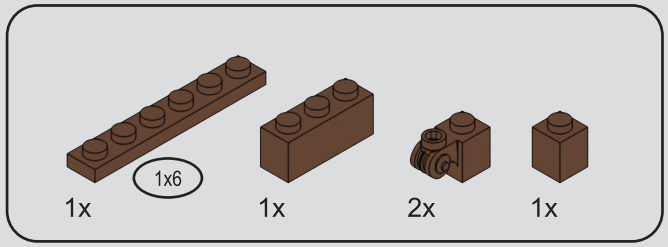

102

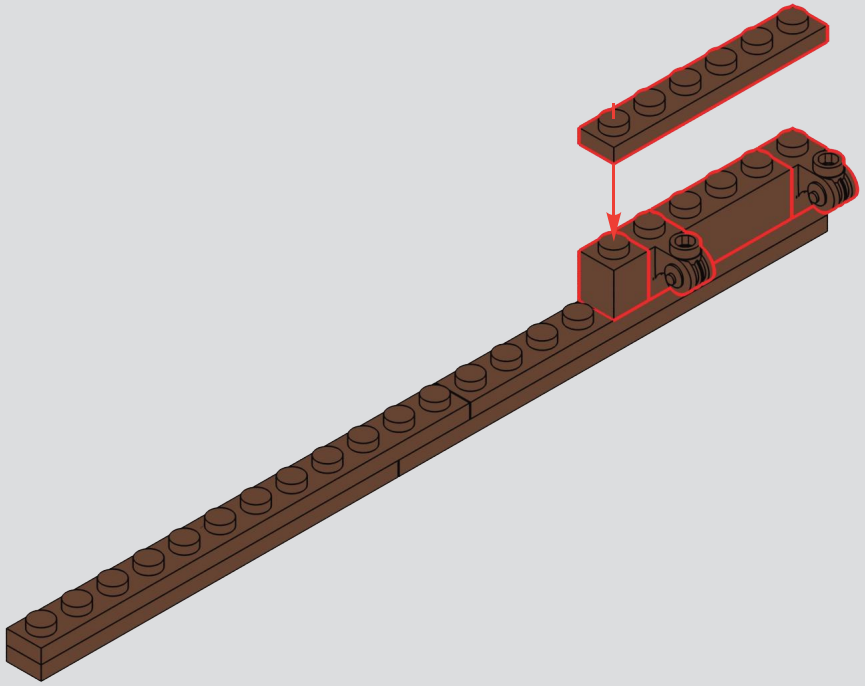

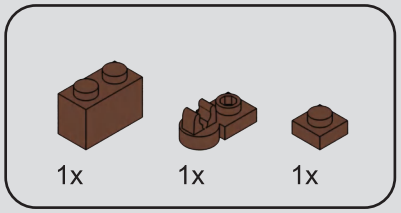

103

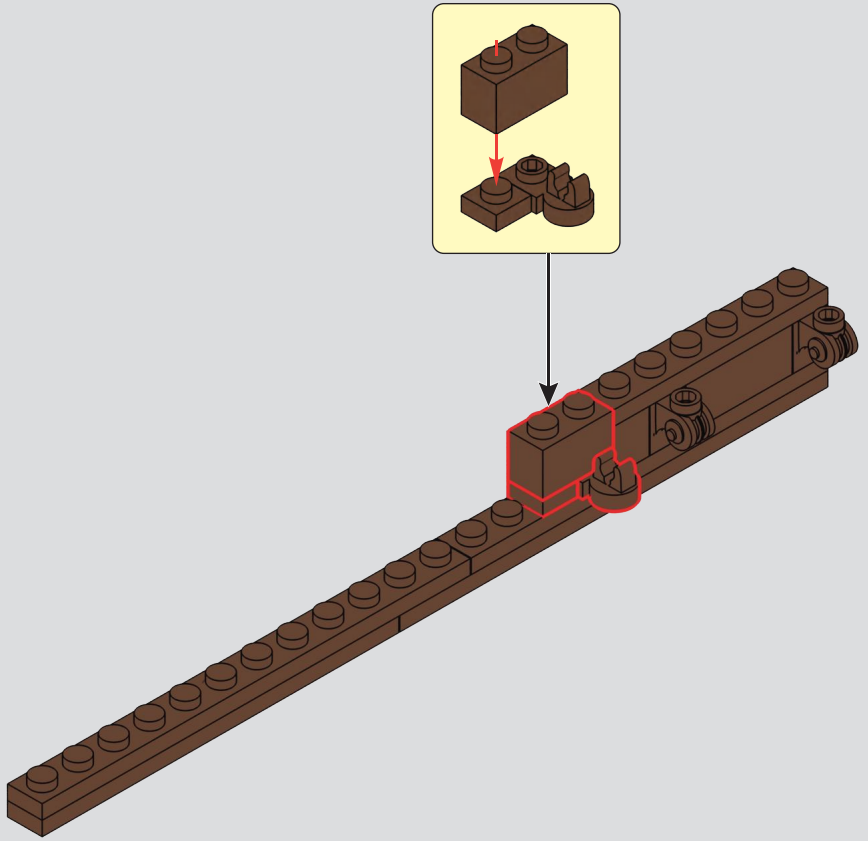

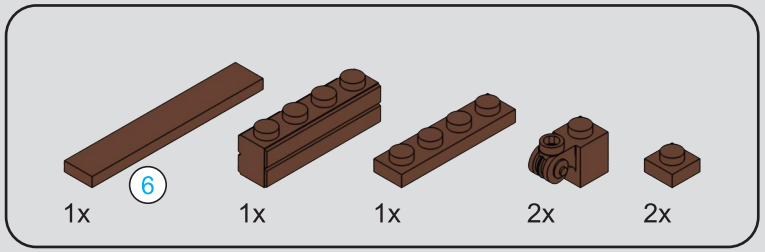



104

1

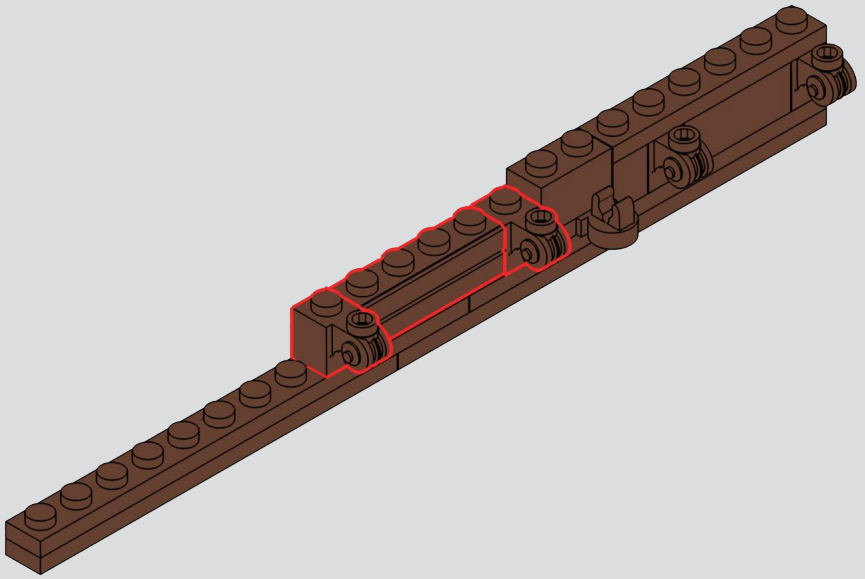

2

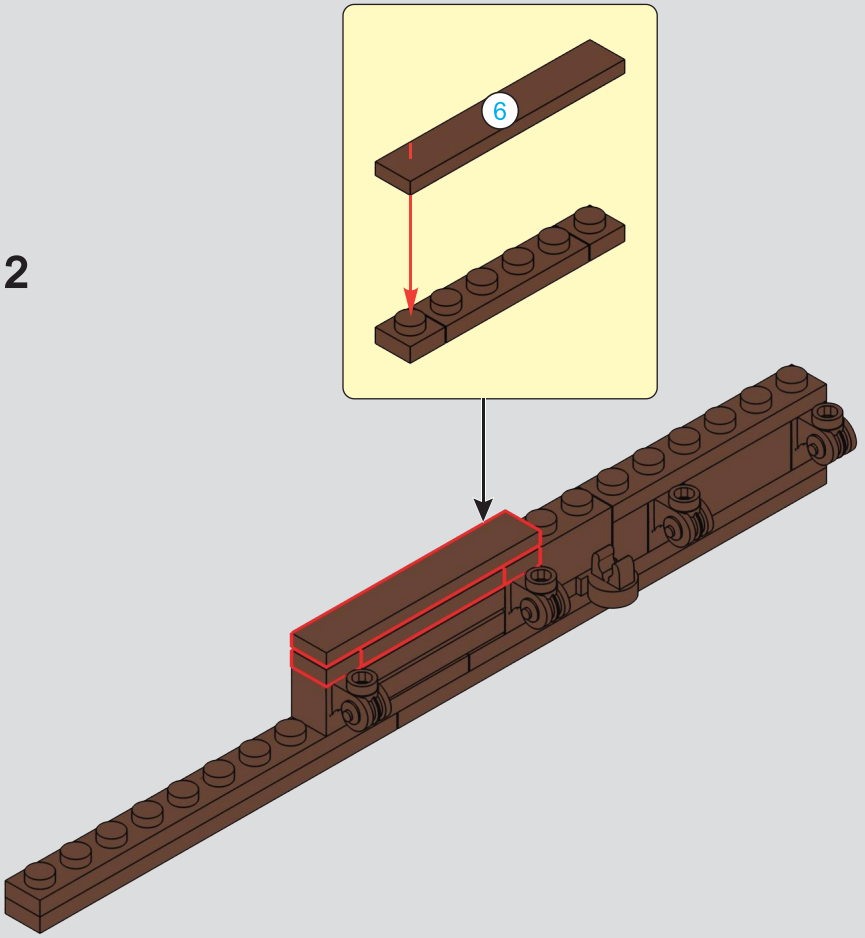

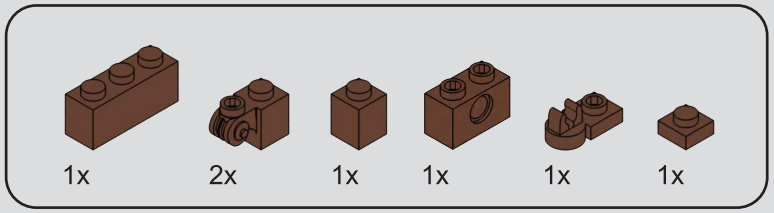

105

1

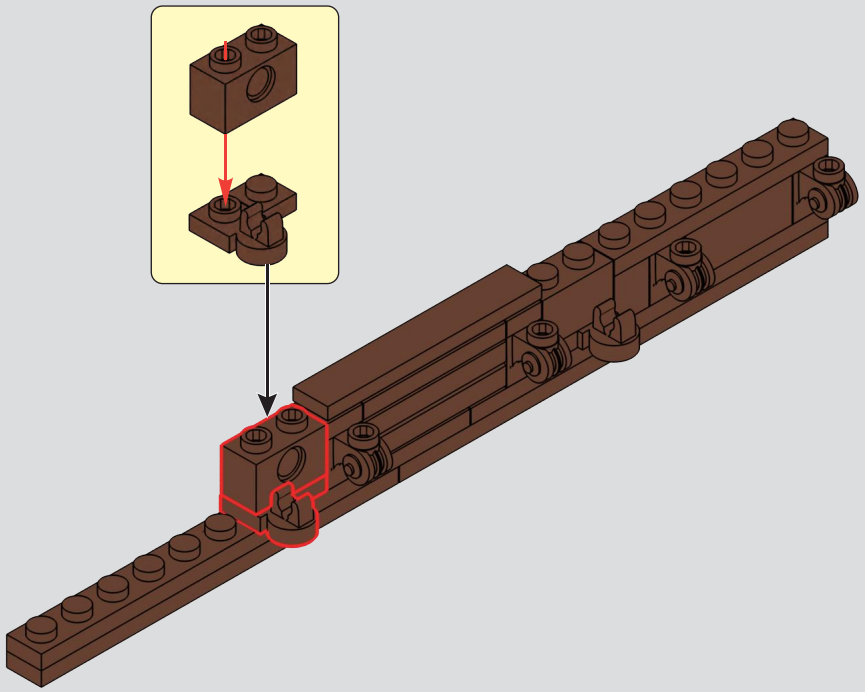

2

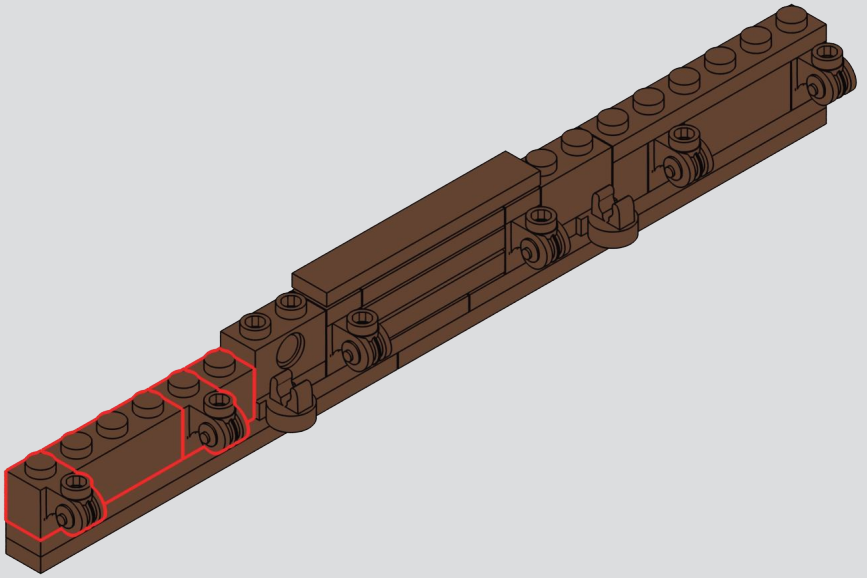

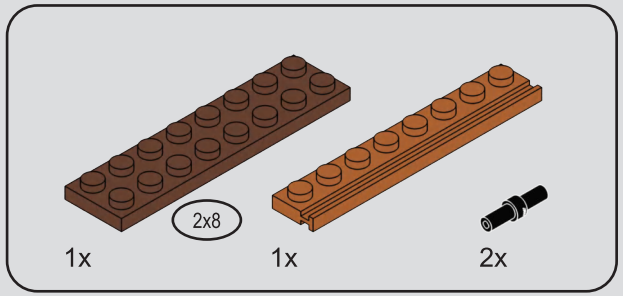

106

1

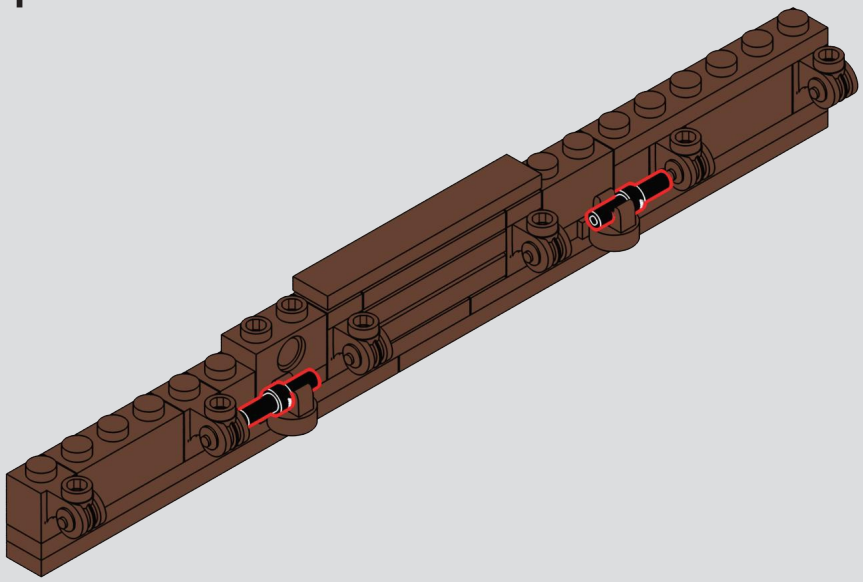

2

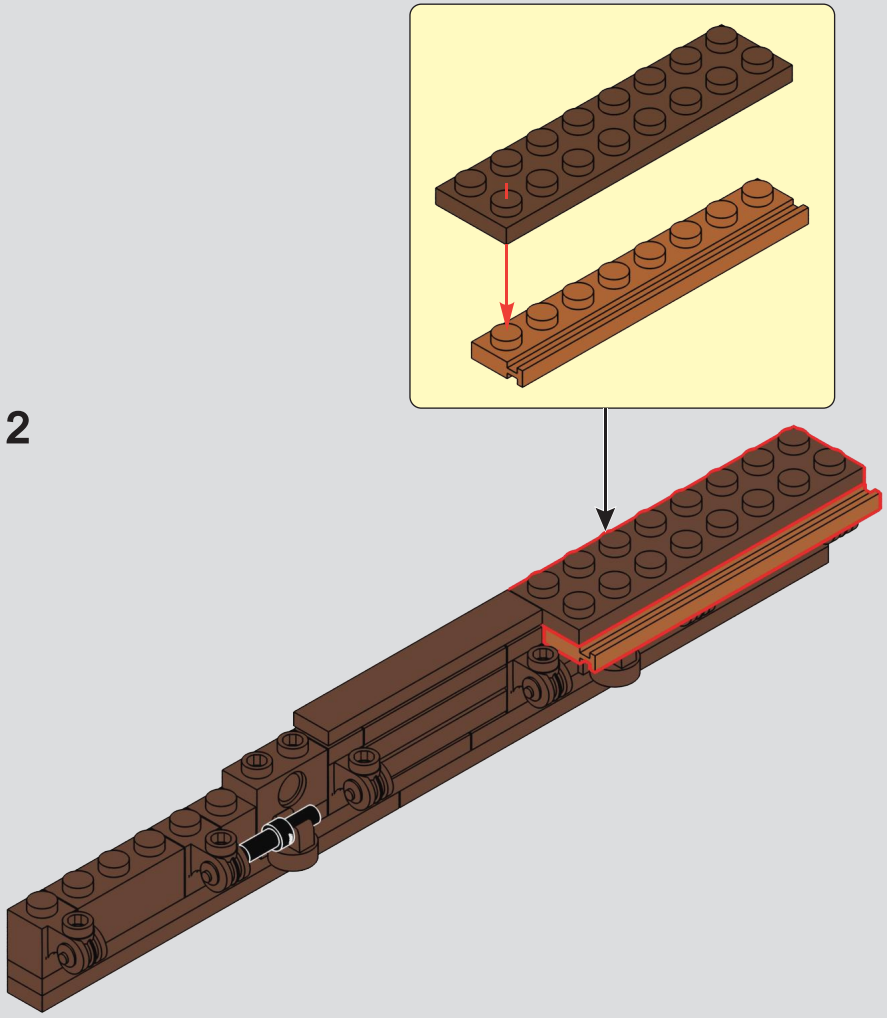

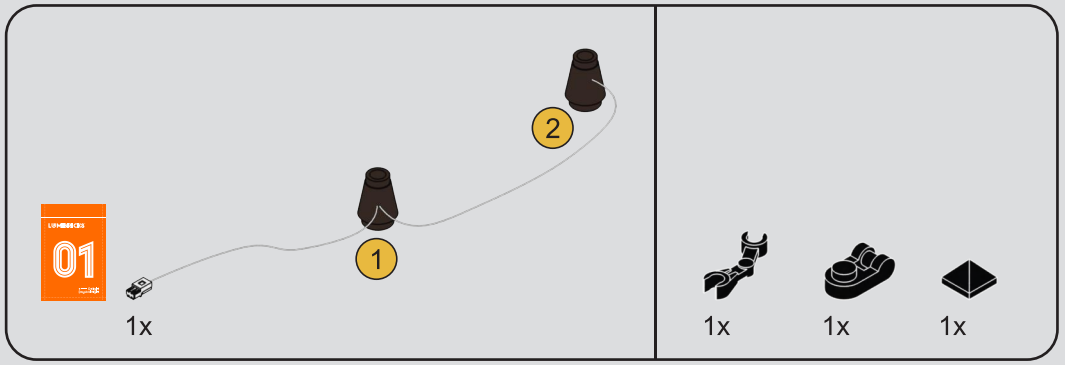

107

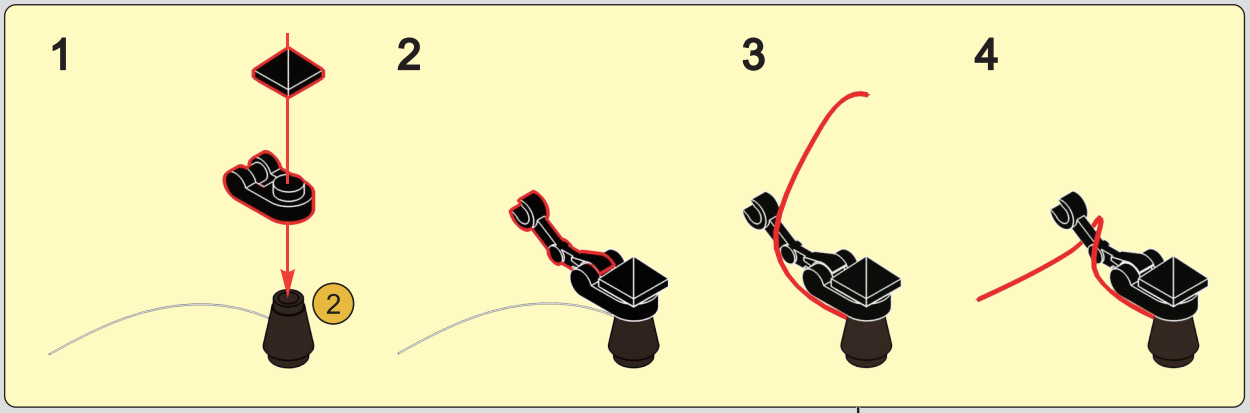

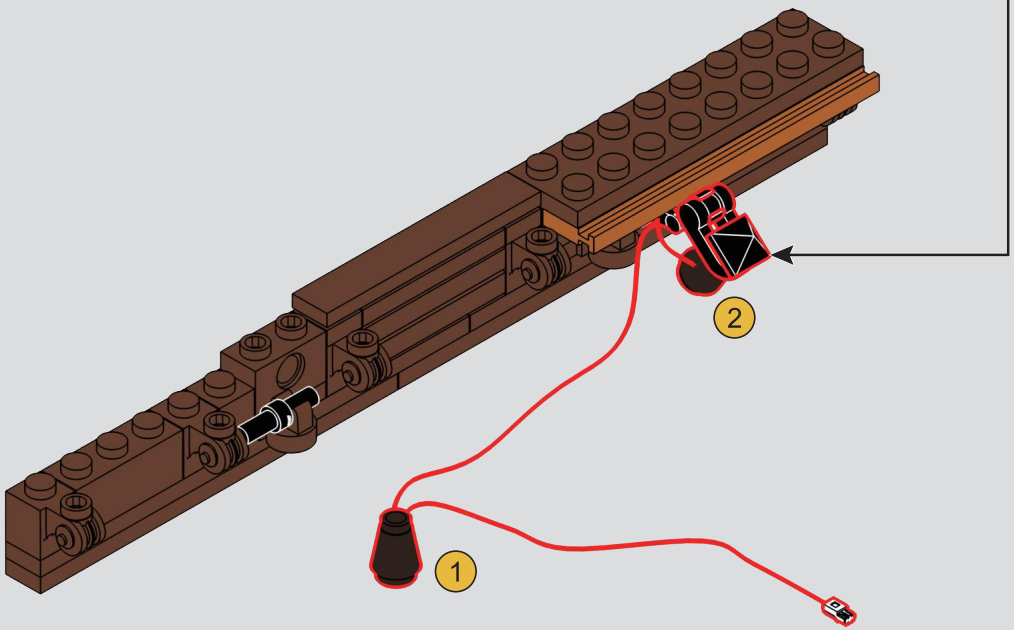

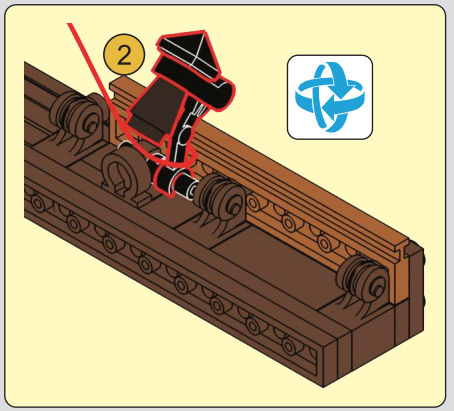

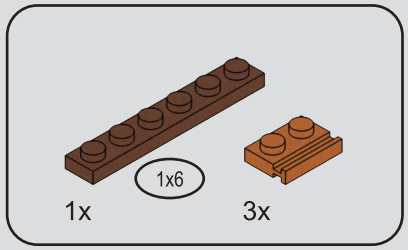

108

1

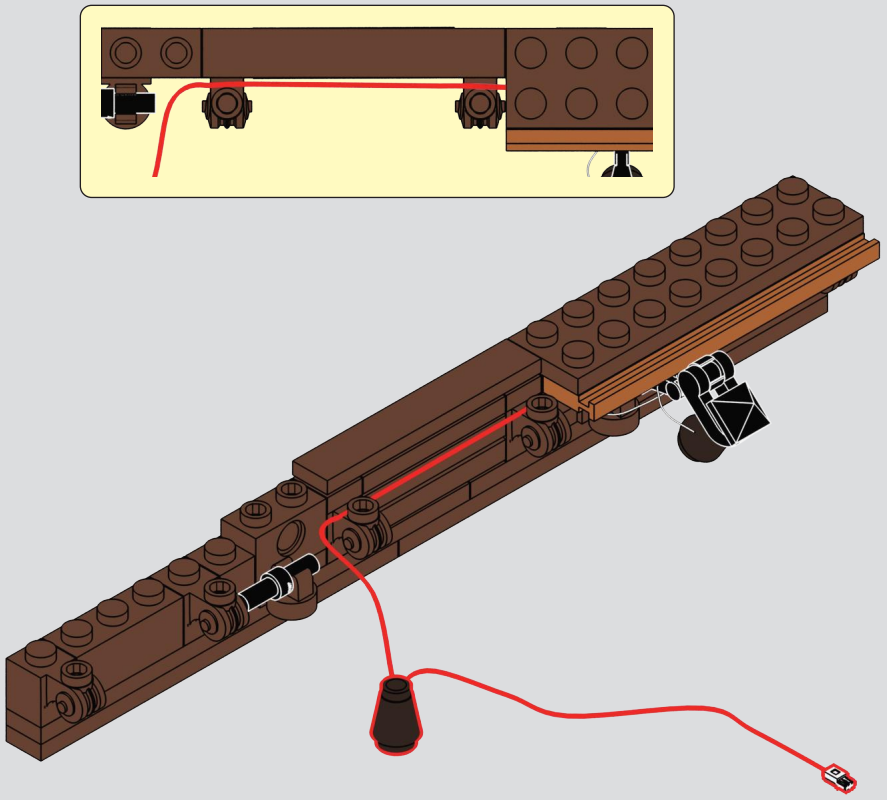

2

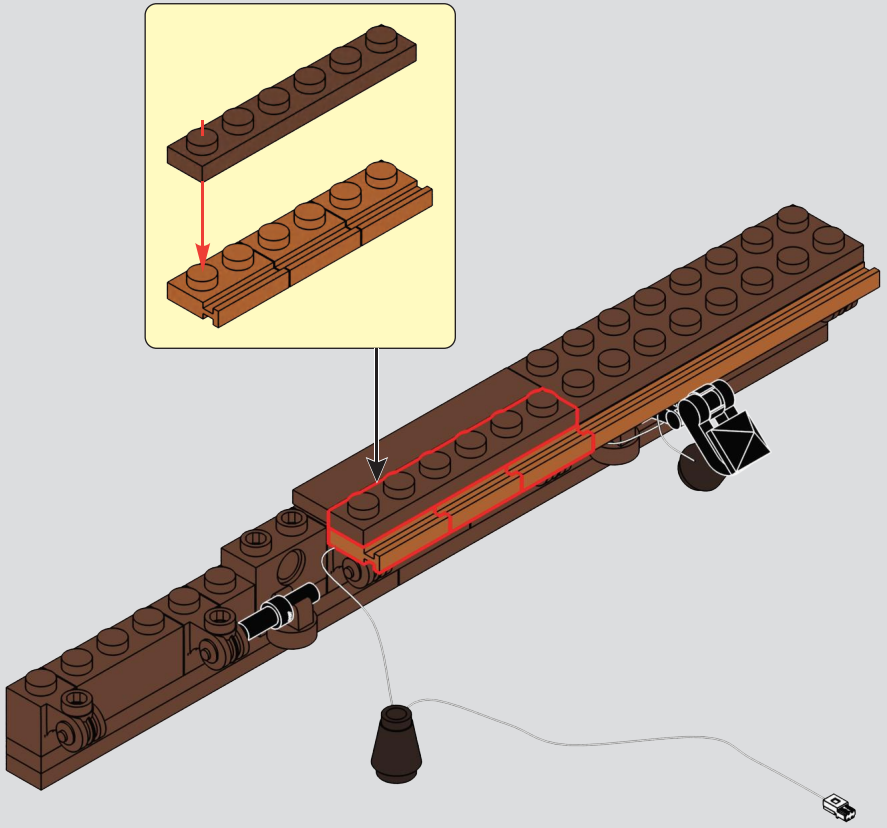

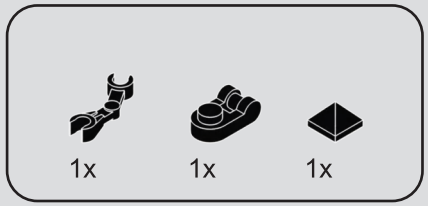

109

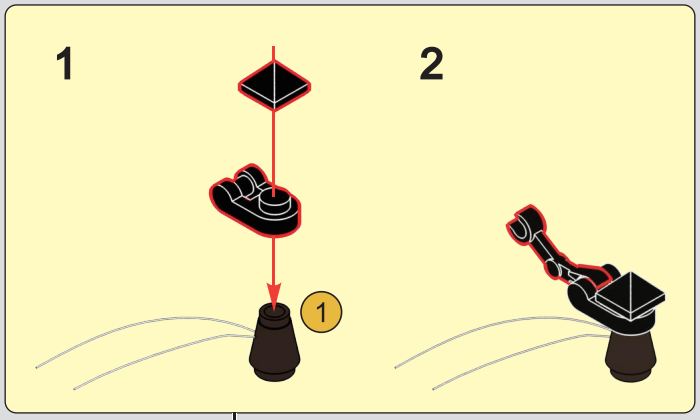

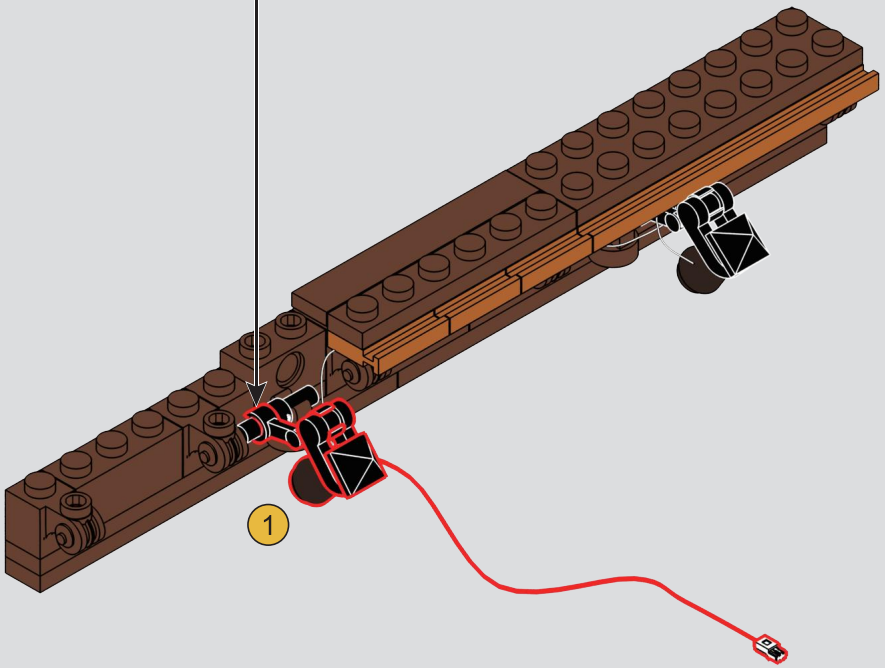

110

1

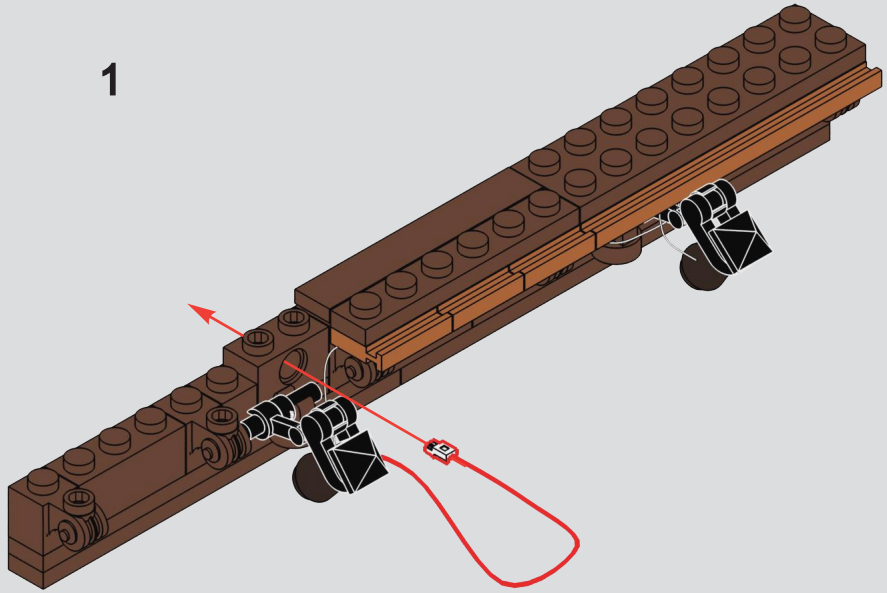

2

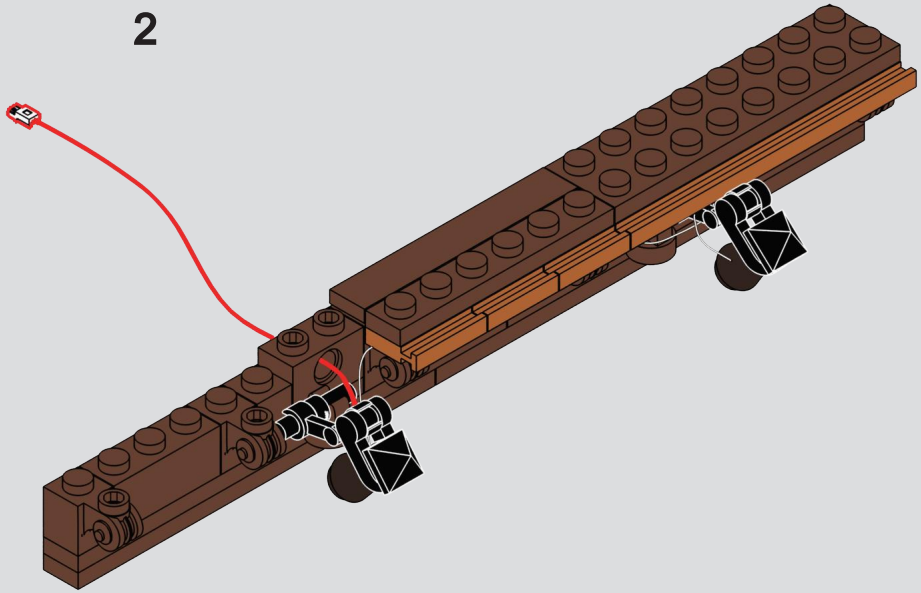

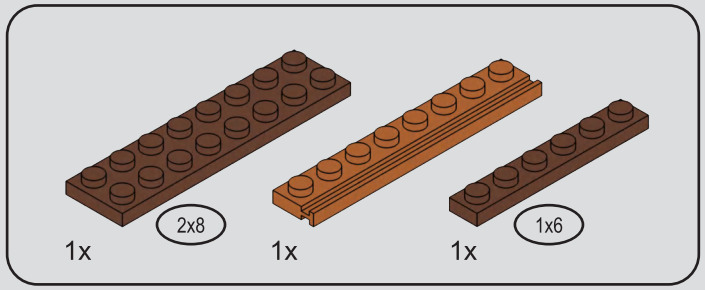

111

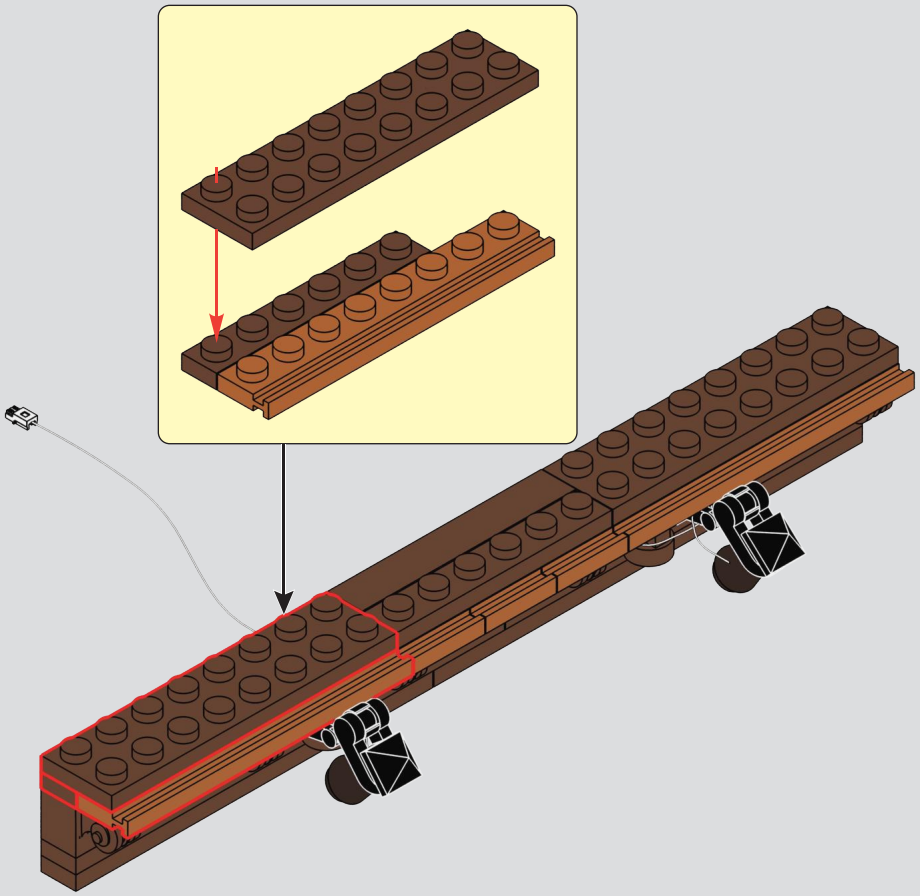

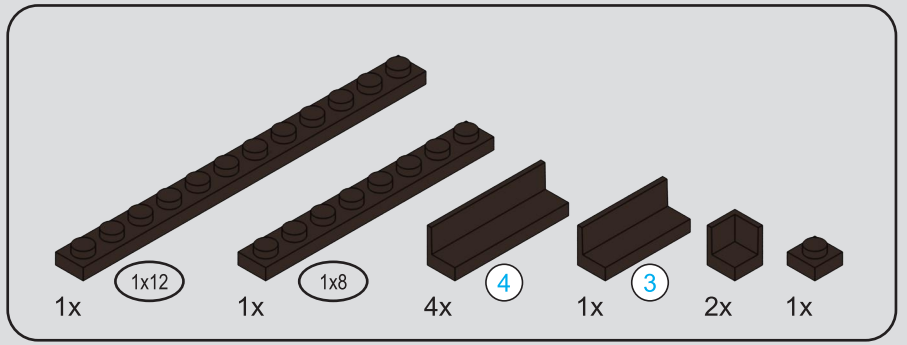

112

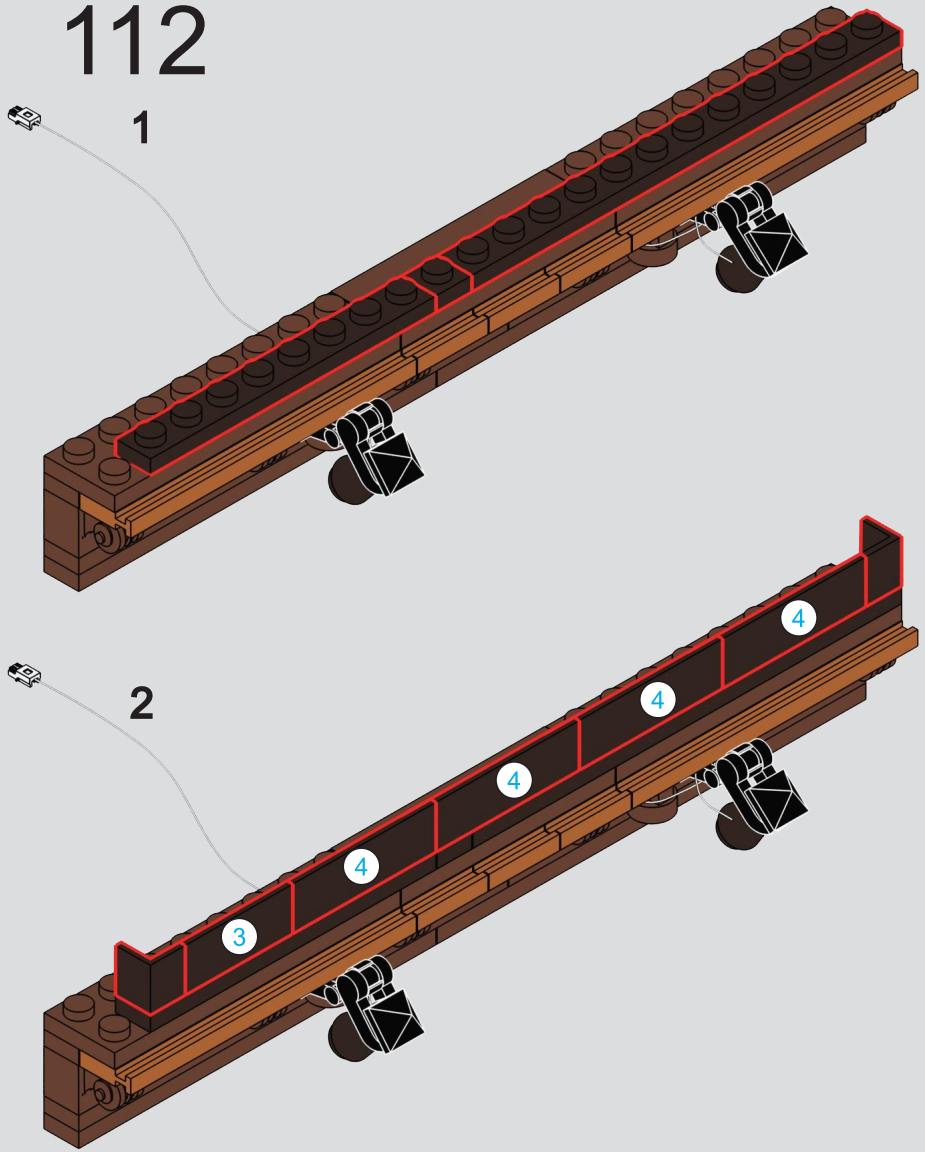

113

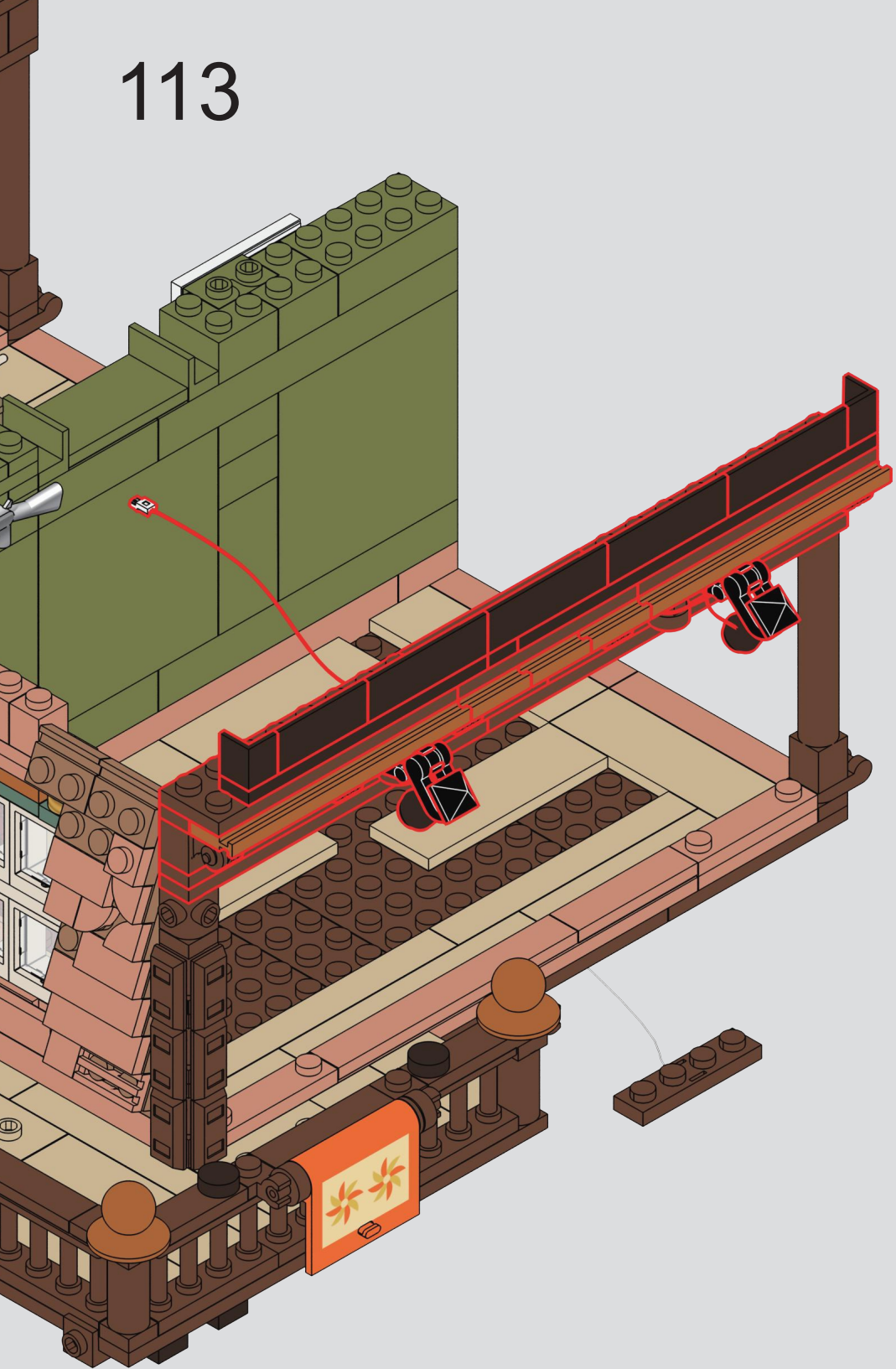

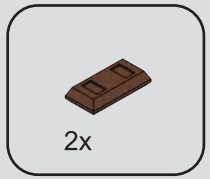

114

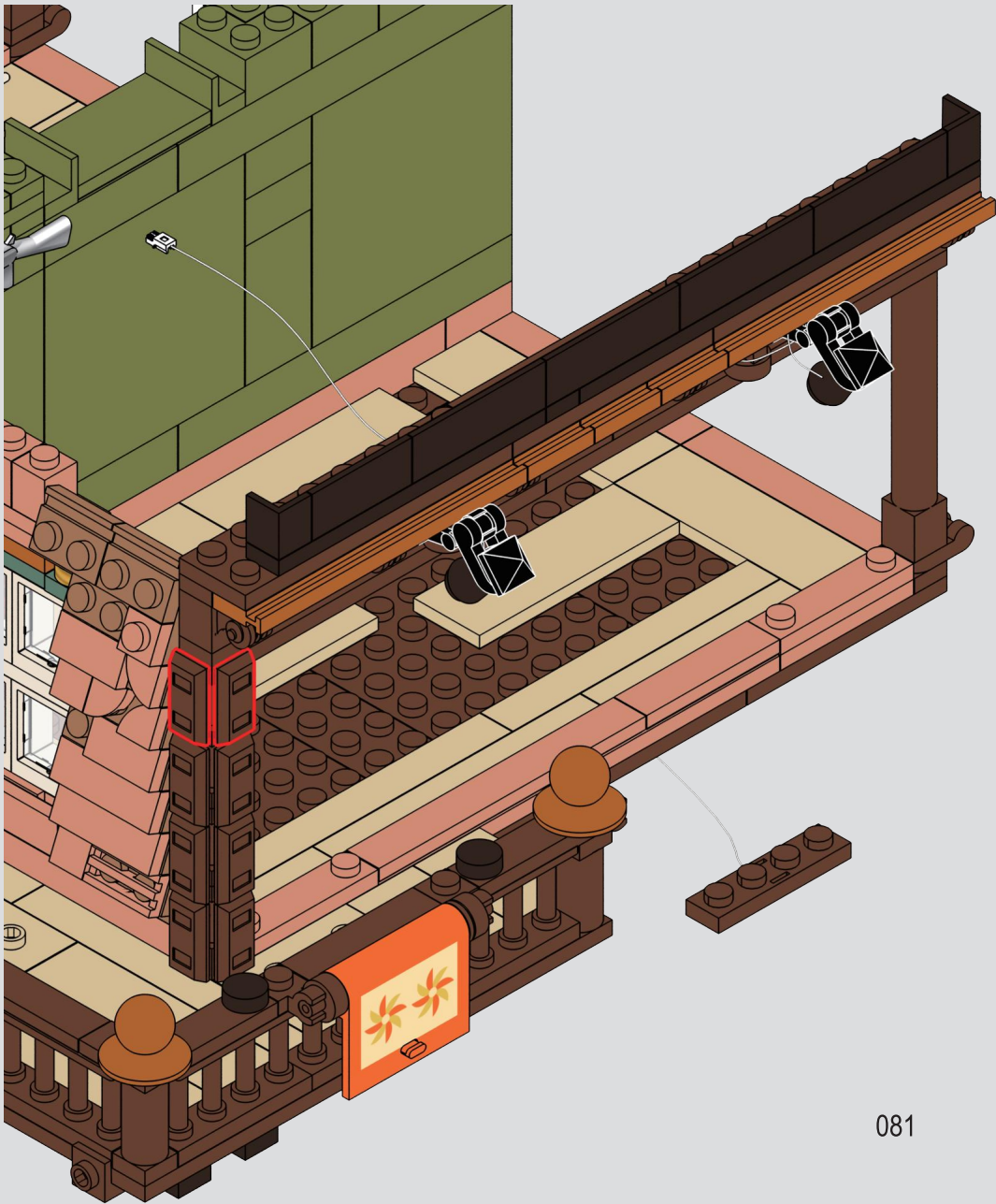

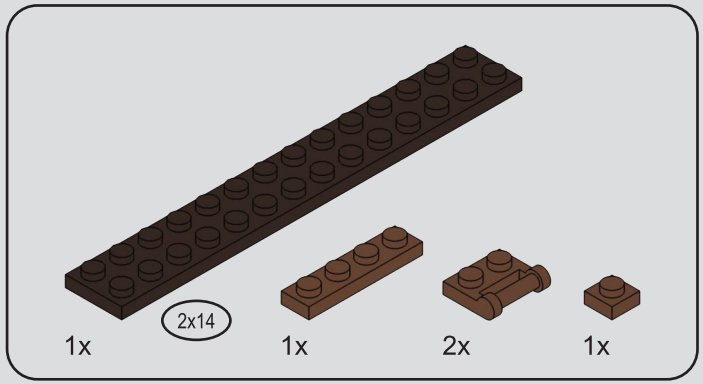

115

1

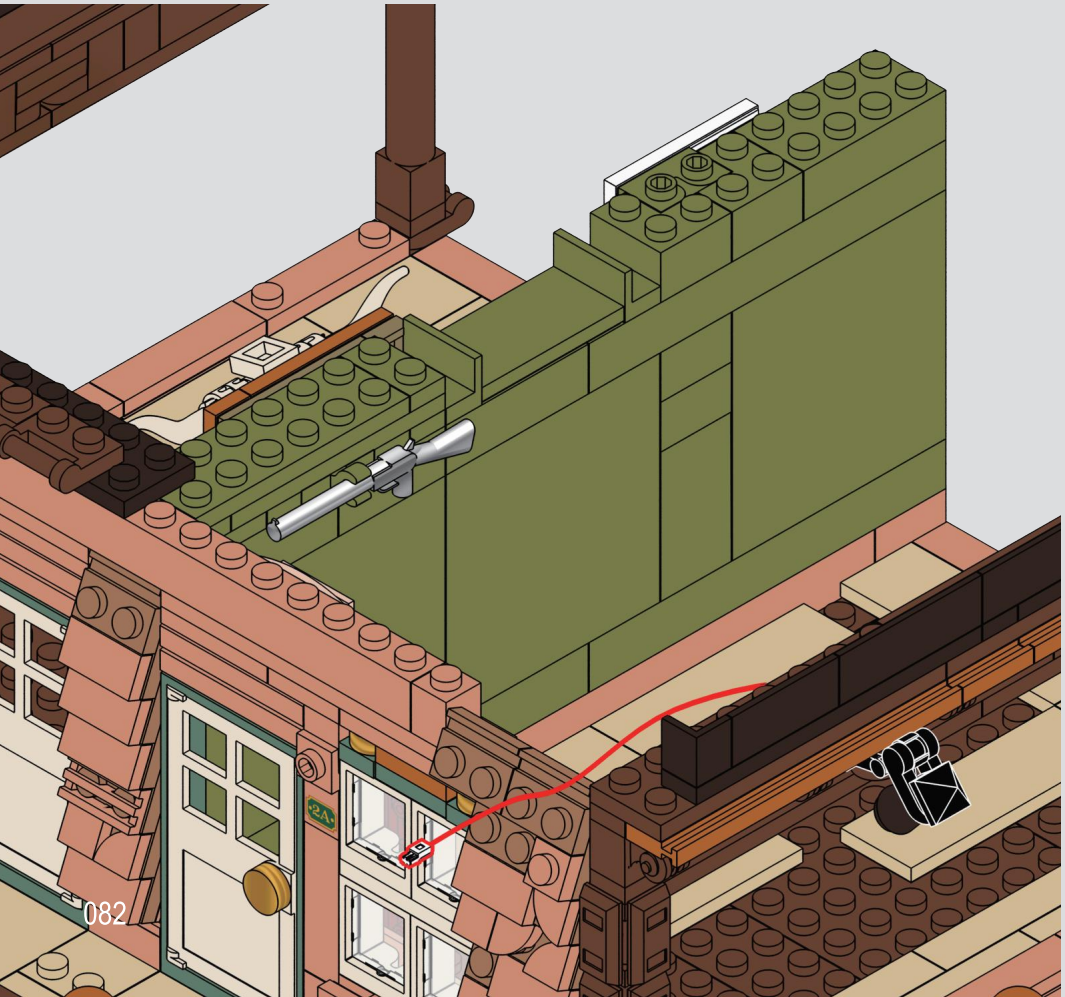

2

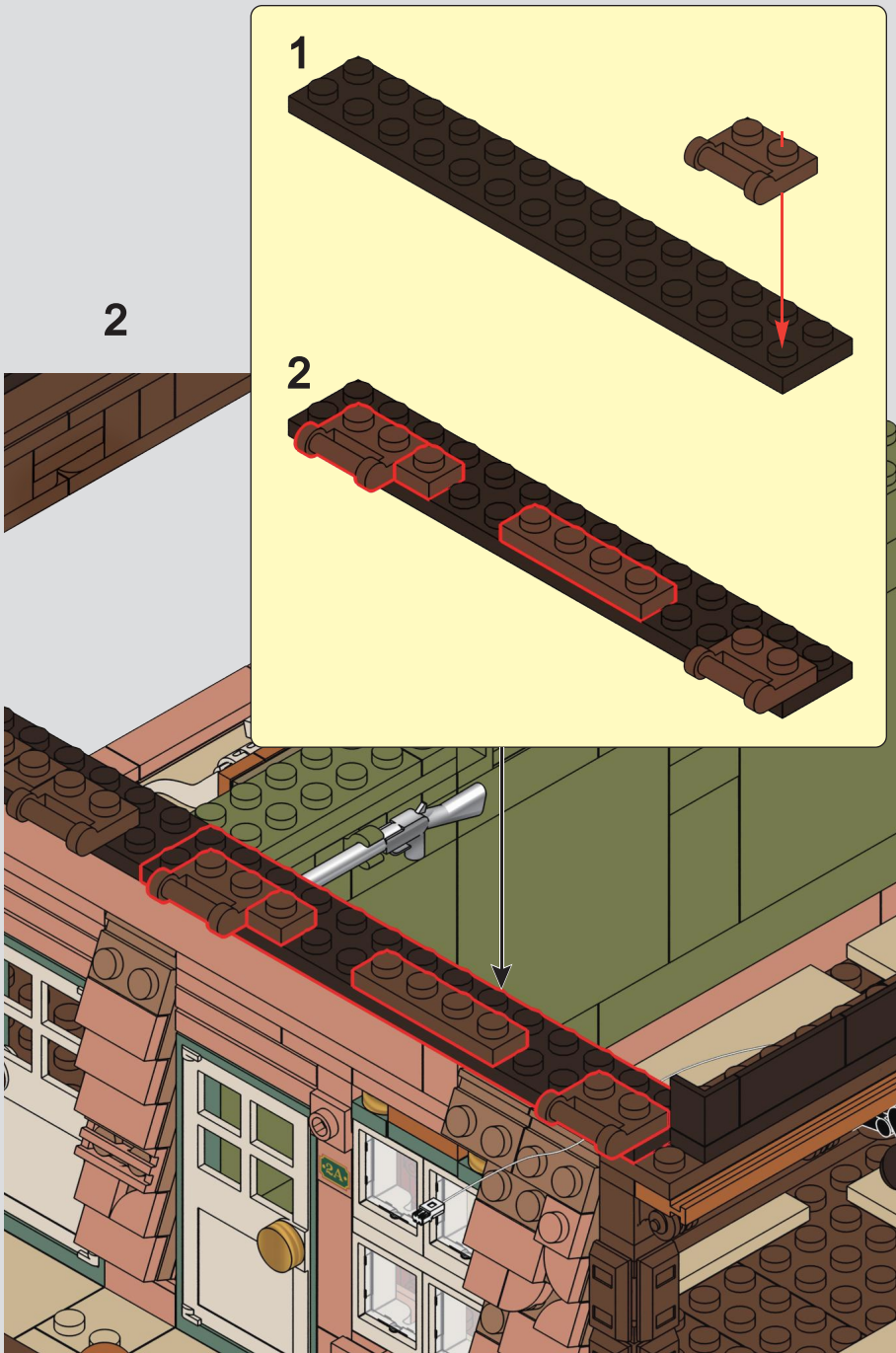


2x
1x
116
GOLD RUSH
HOTEL
083

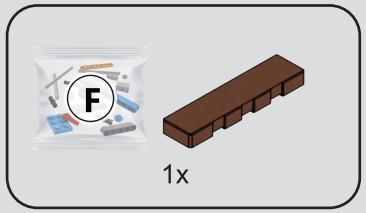

117

1

2

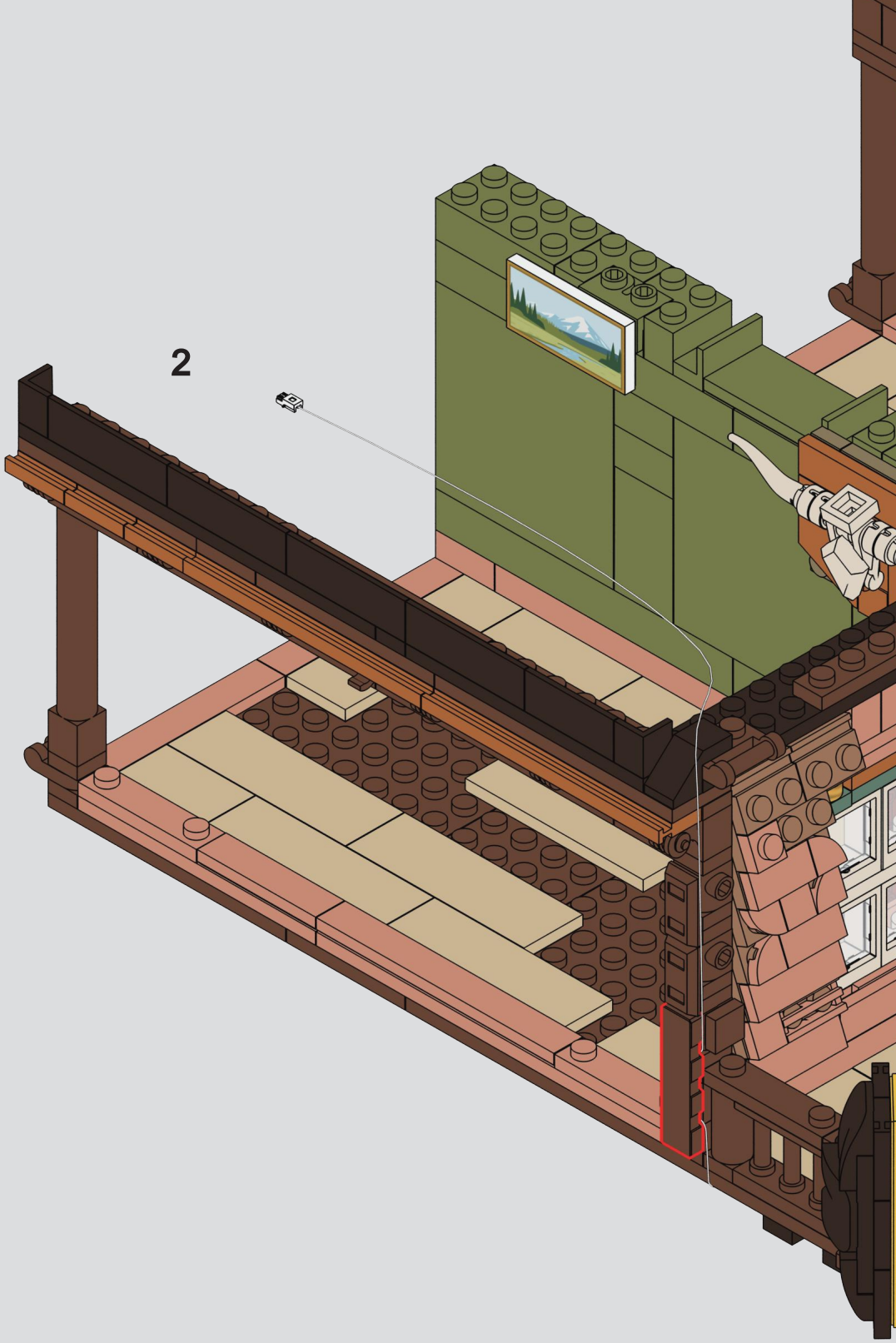

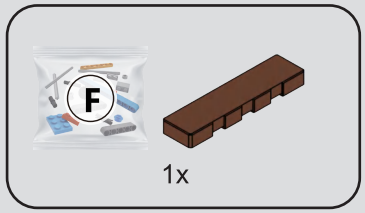

118

1

2

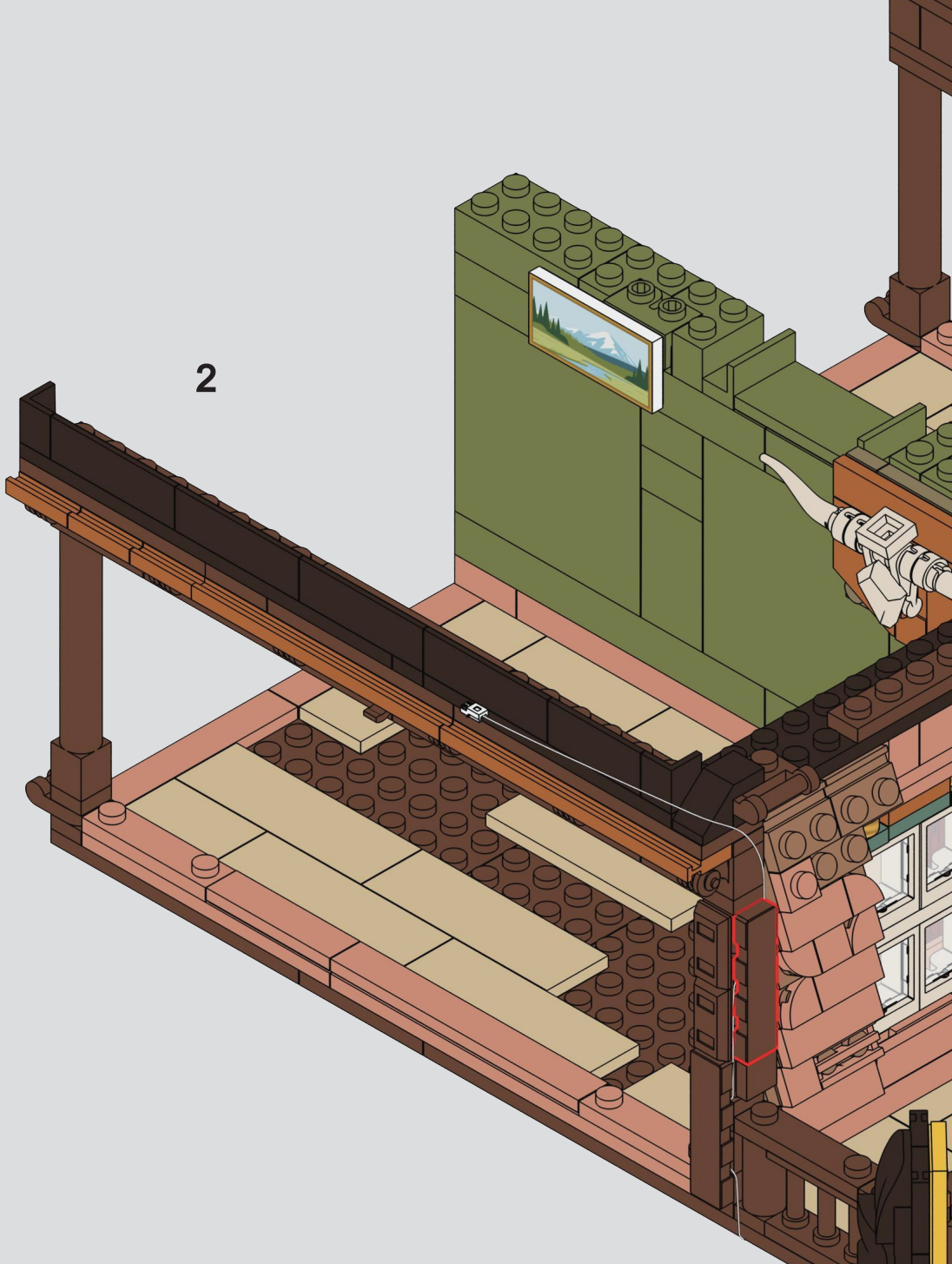

119

1

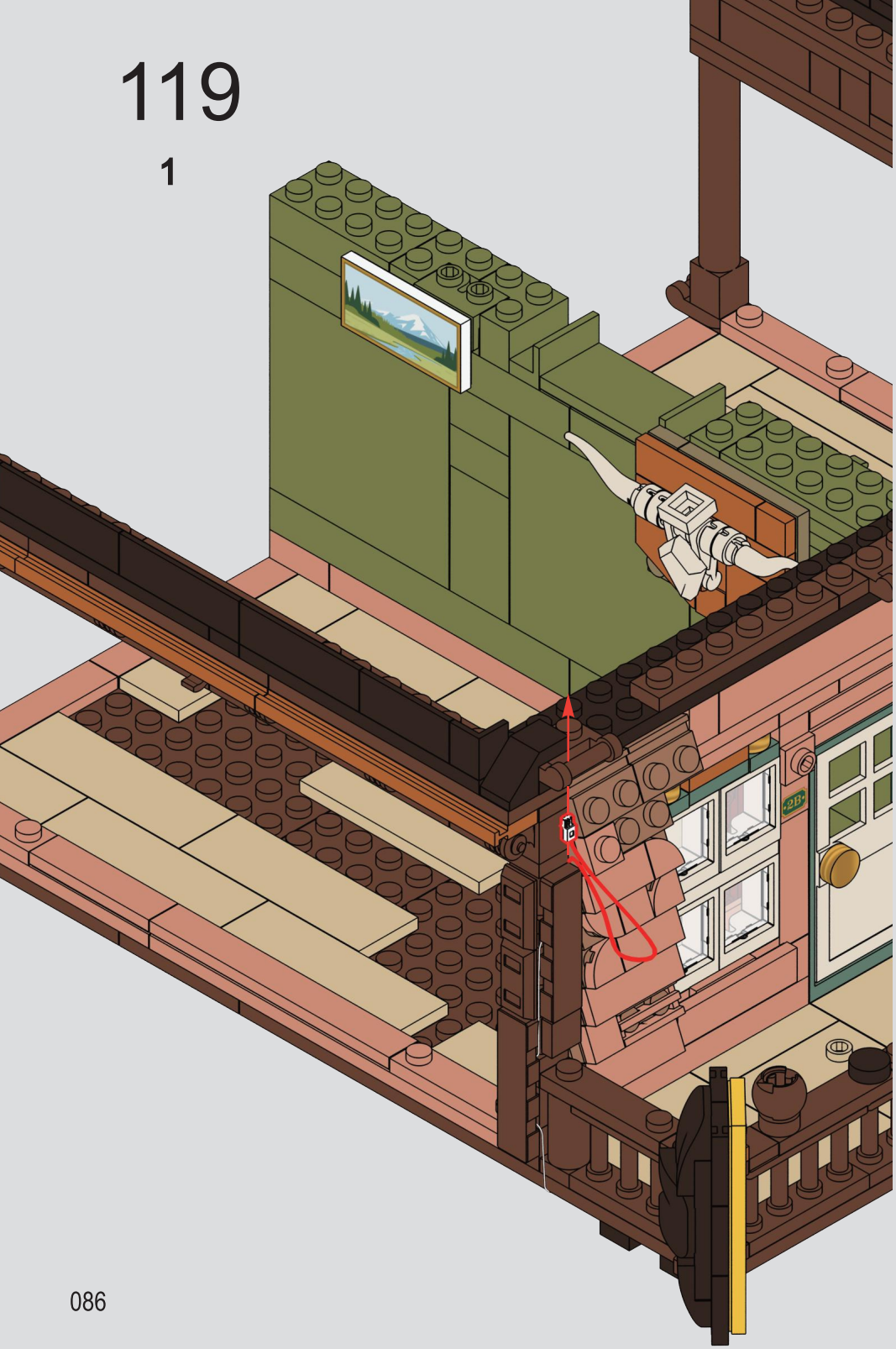

2

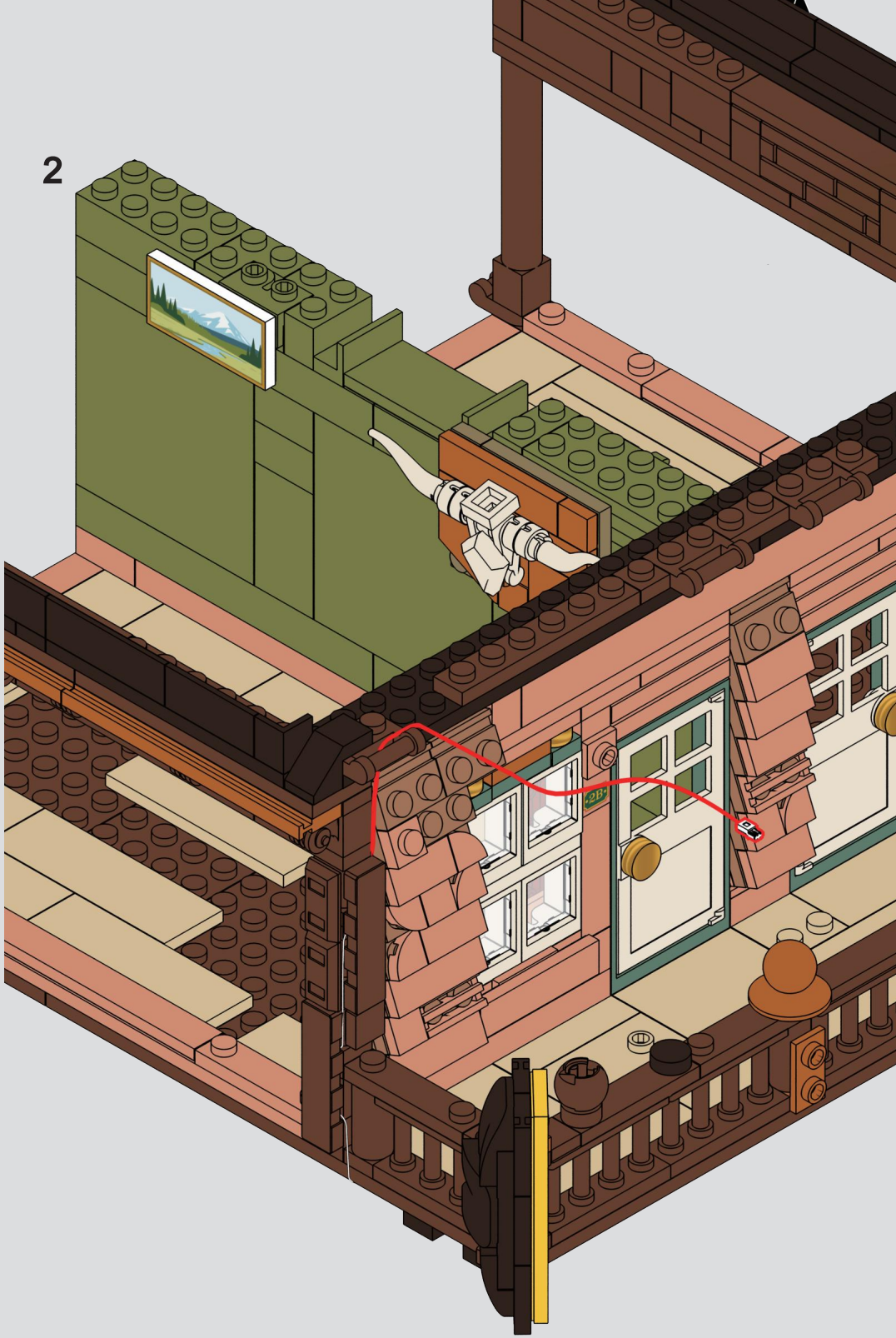

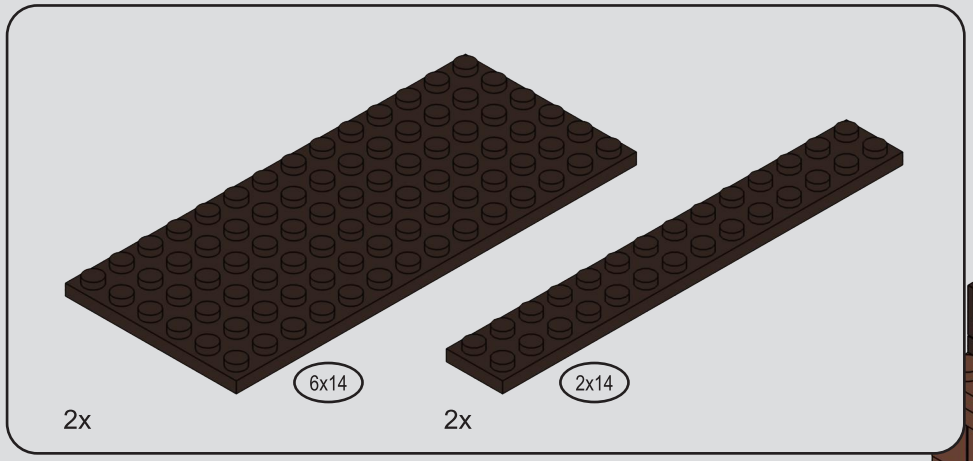

120

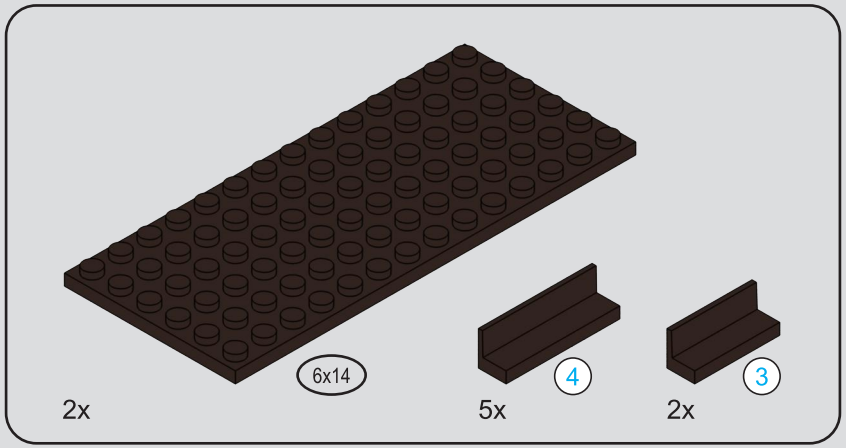

121

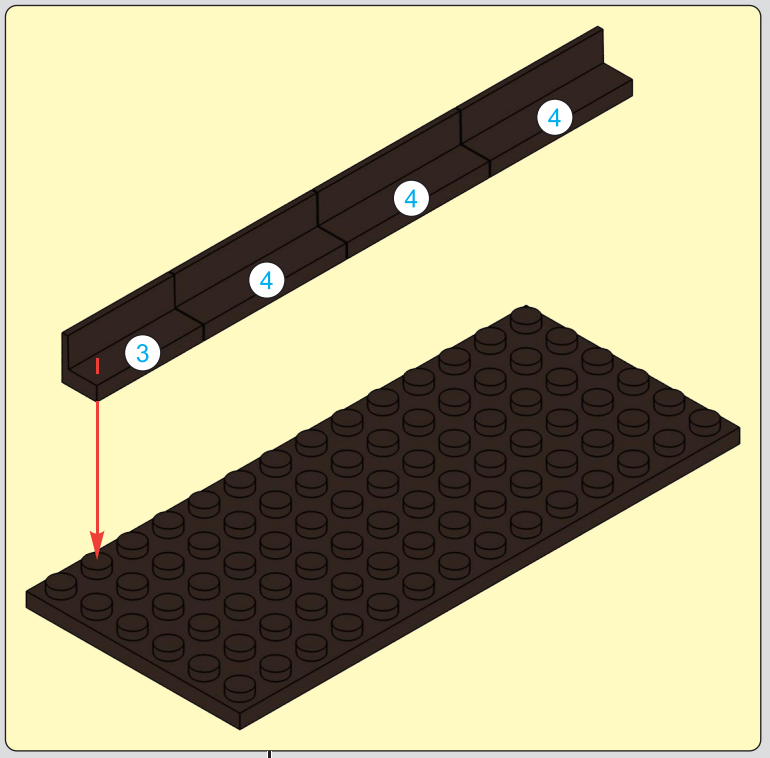

1

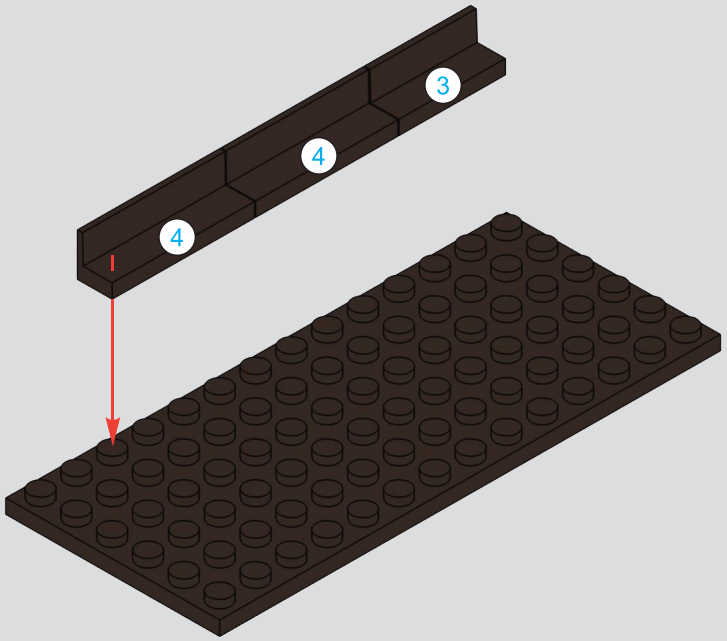

2

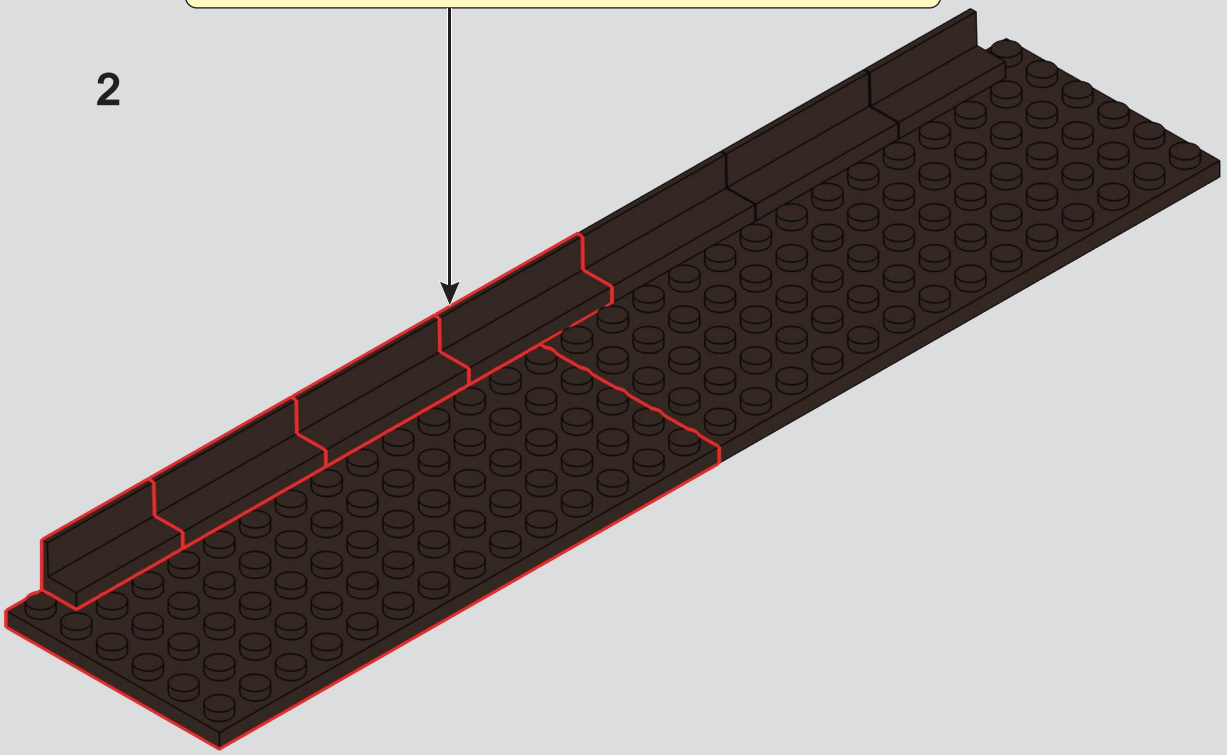

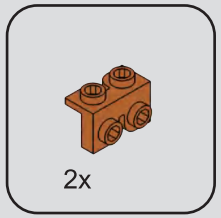

122

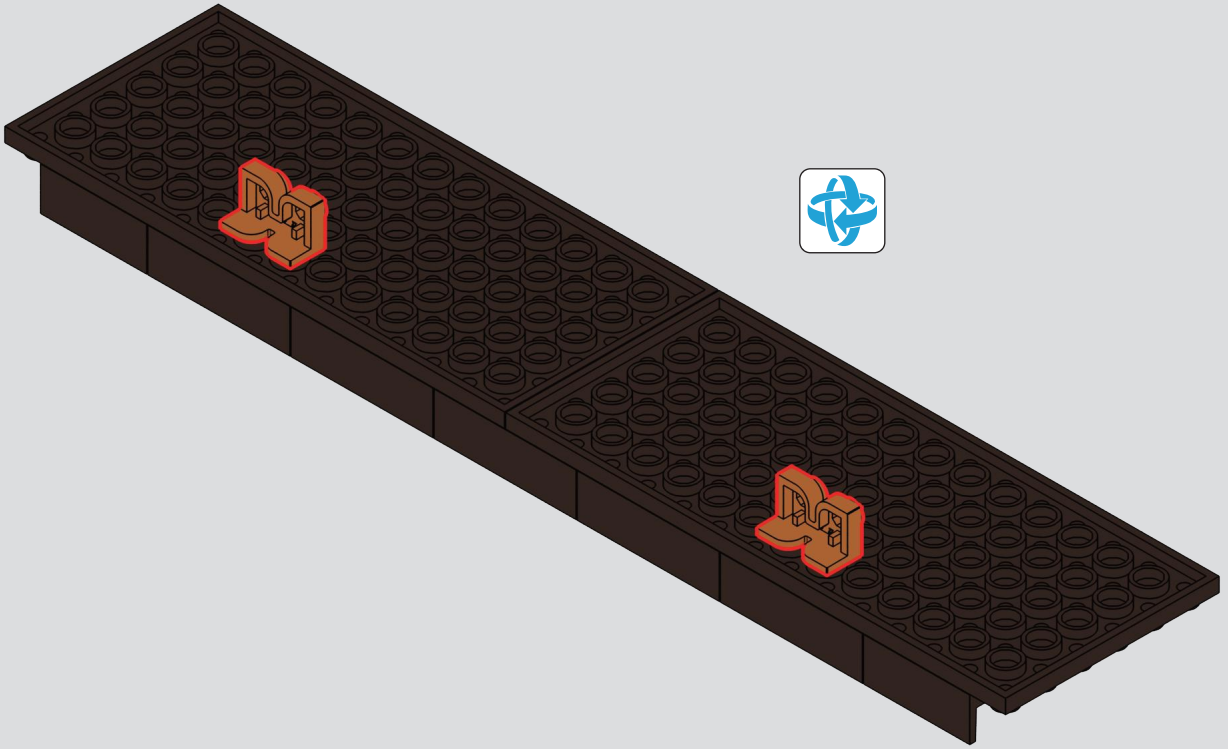

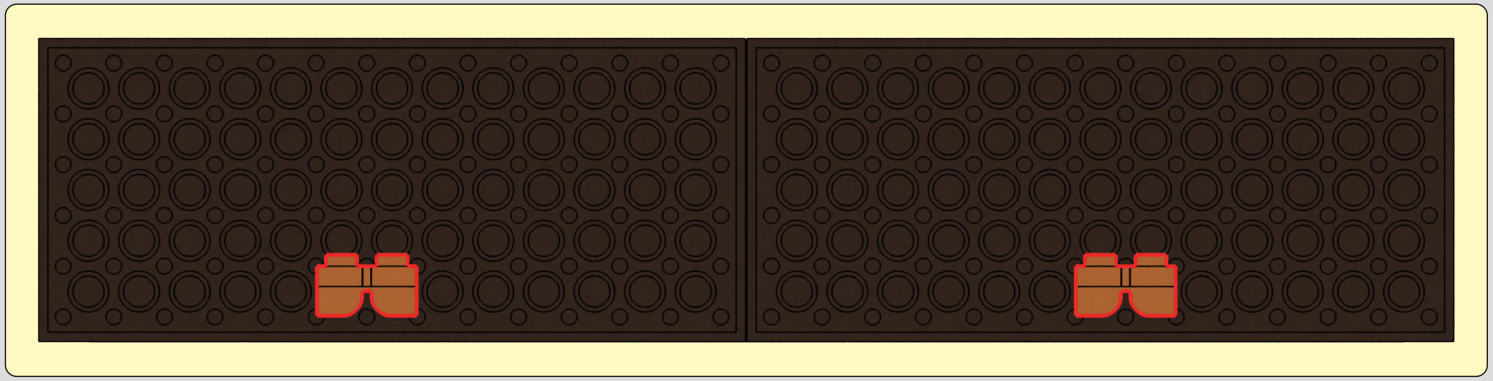

123

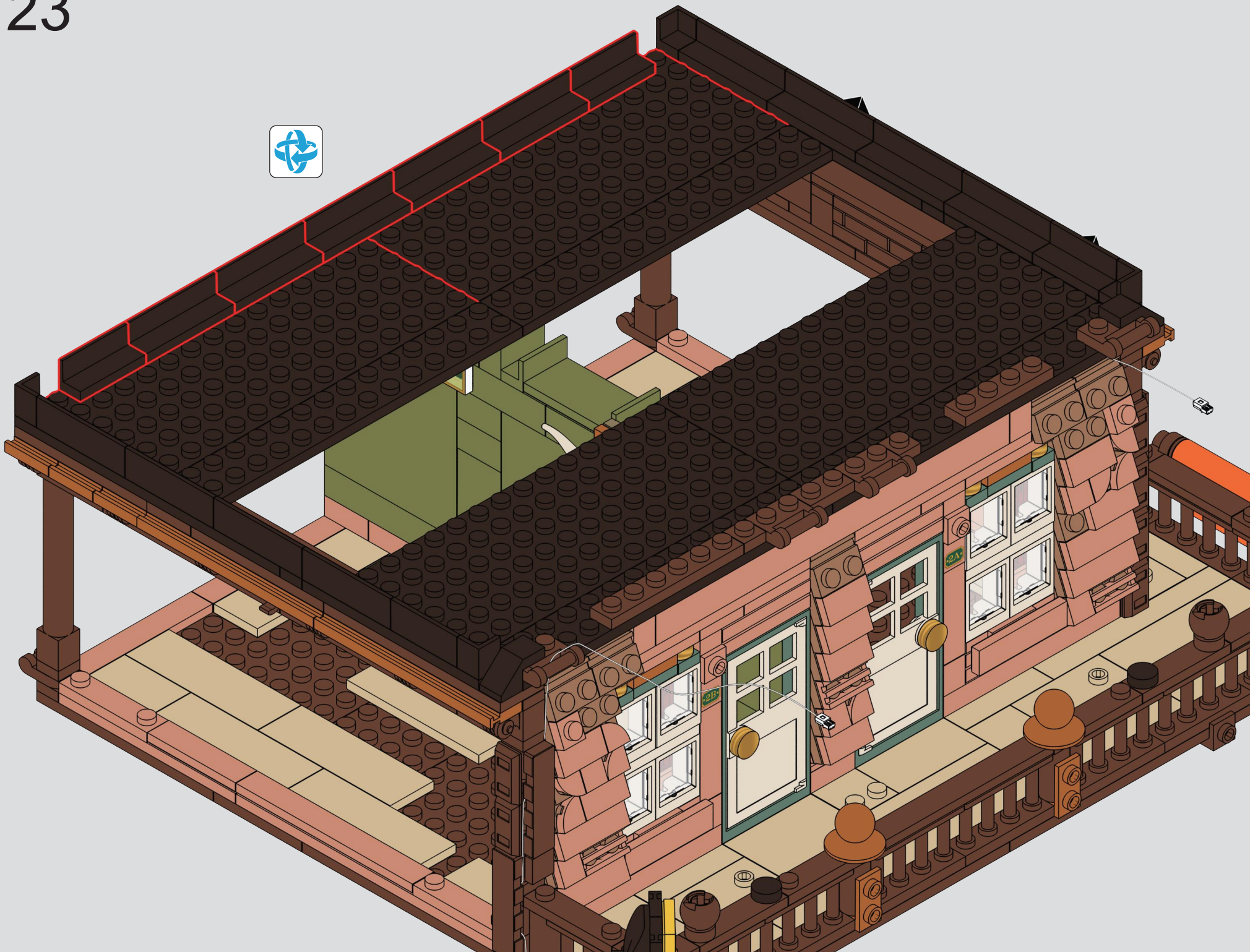

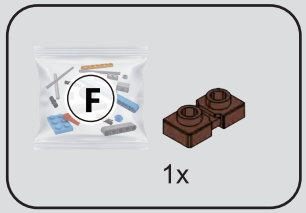

124

1

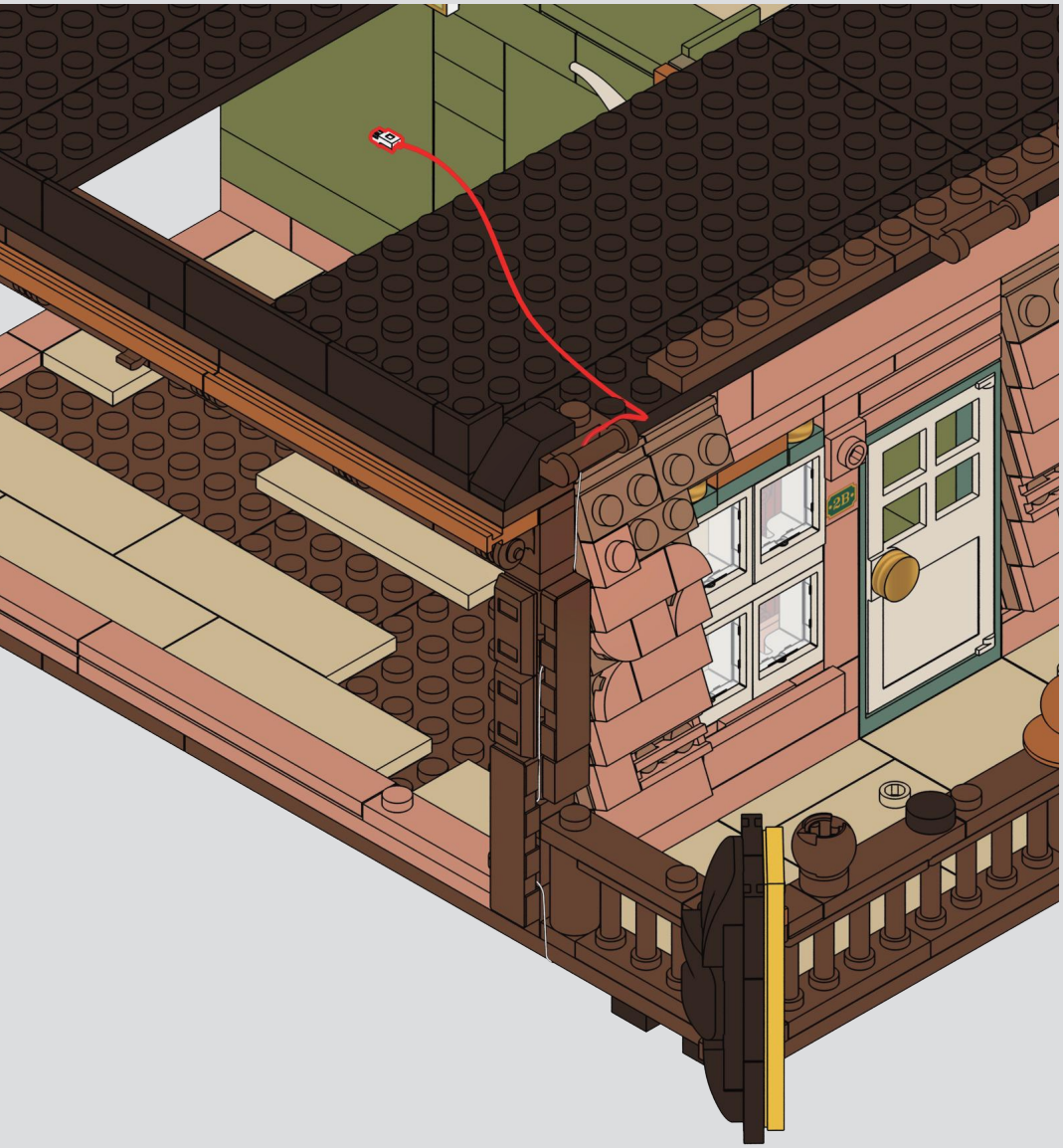

2

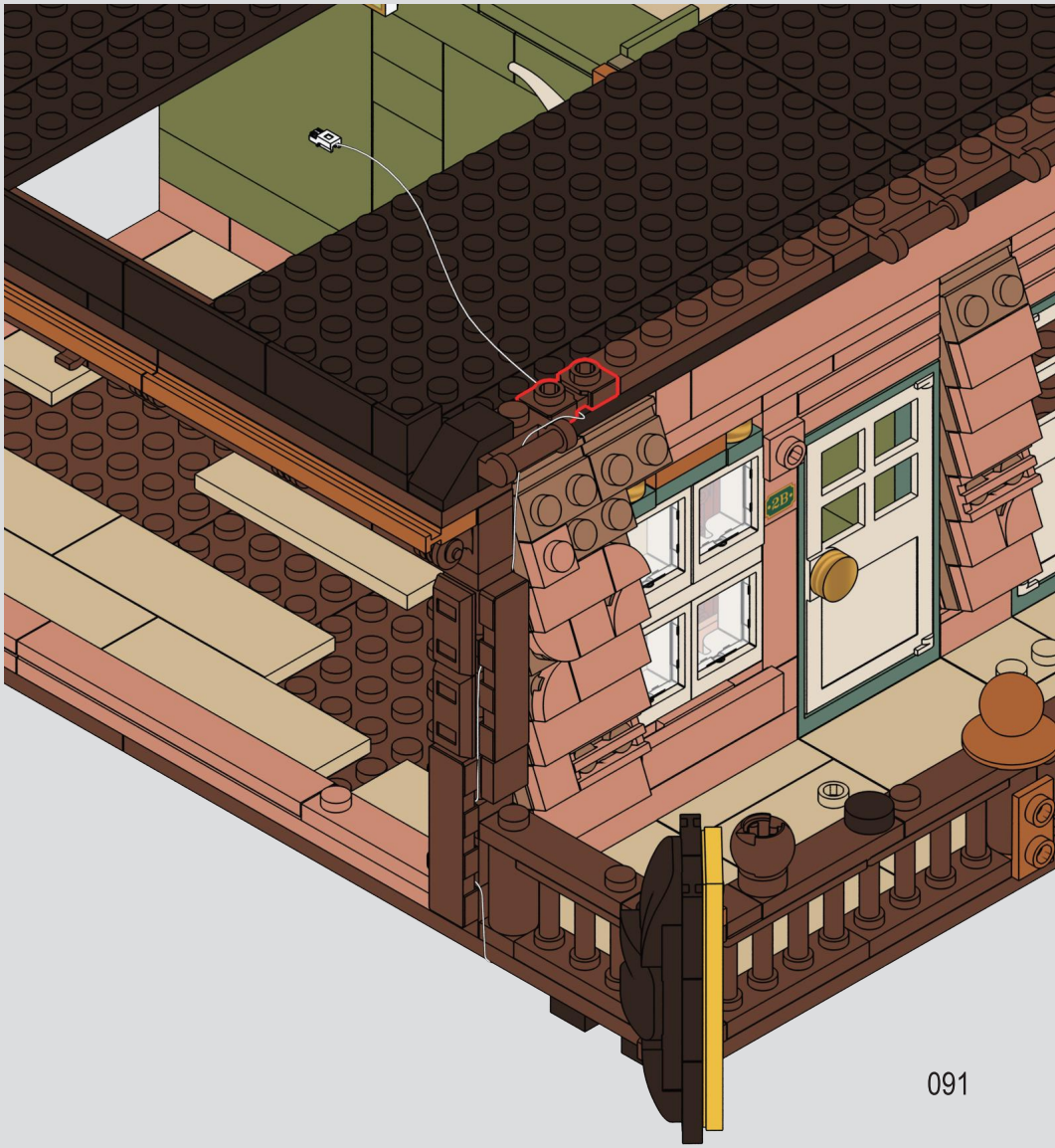

1

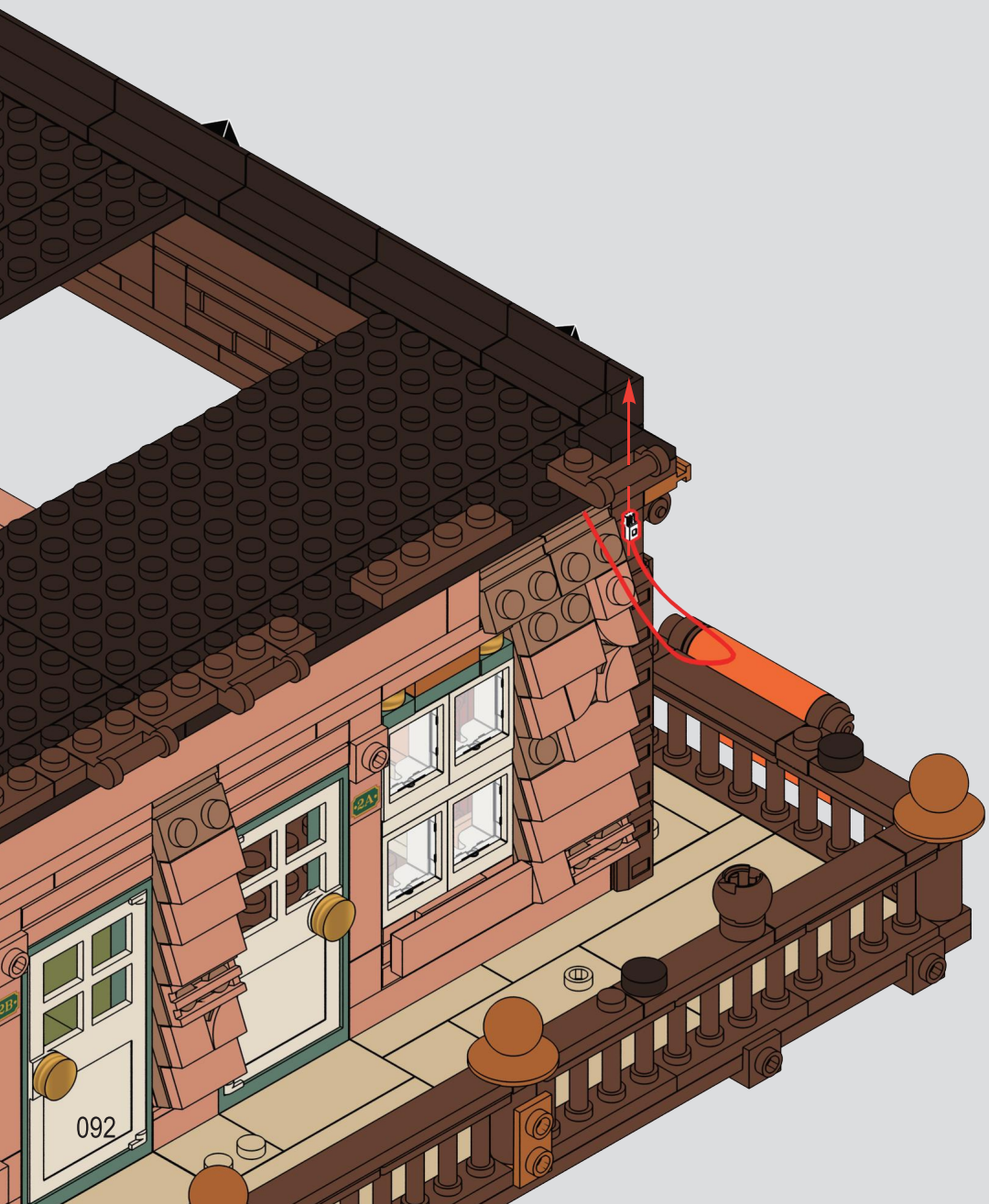

2

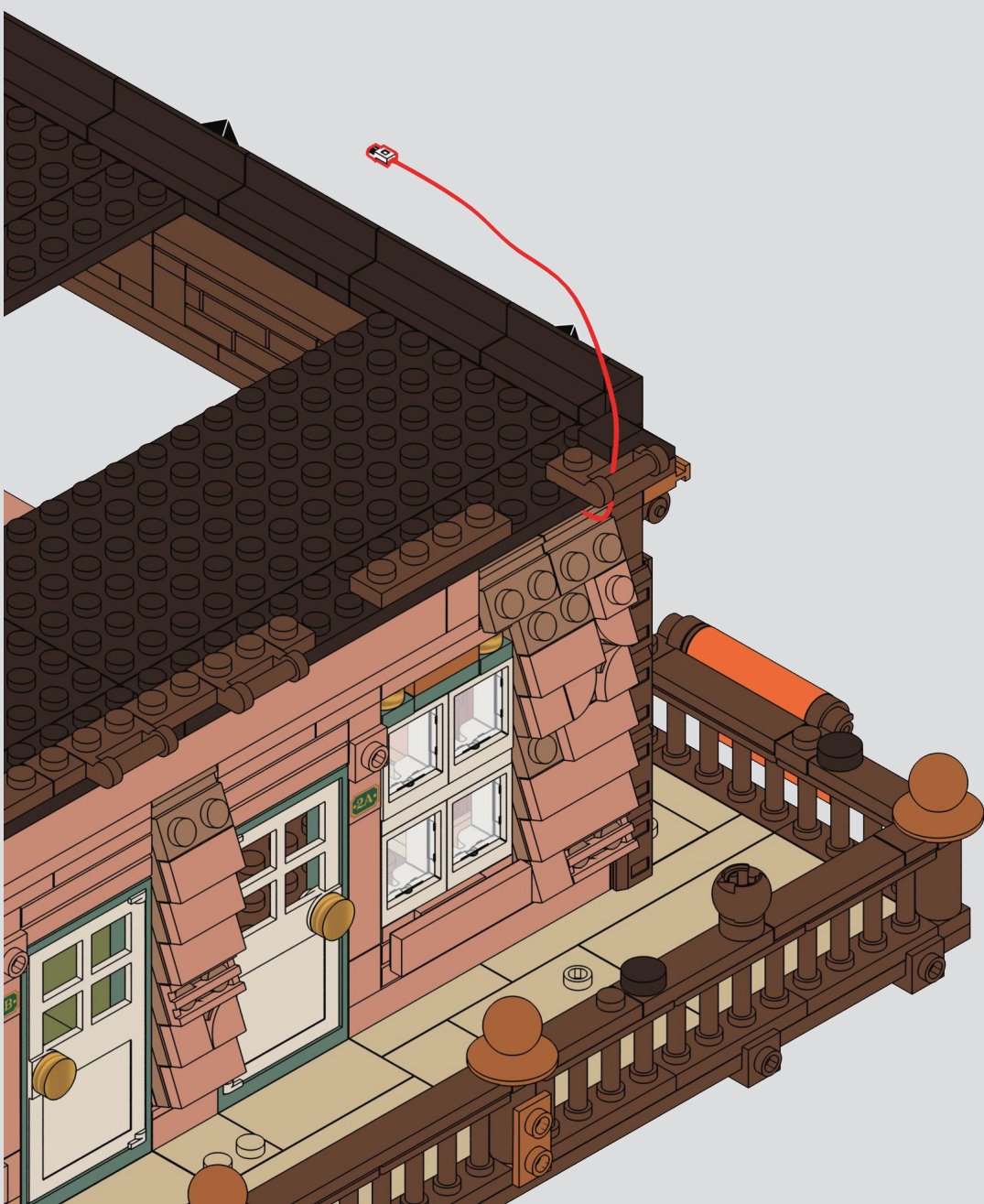

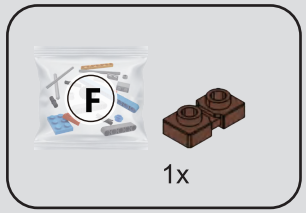

126

1

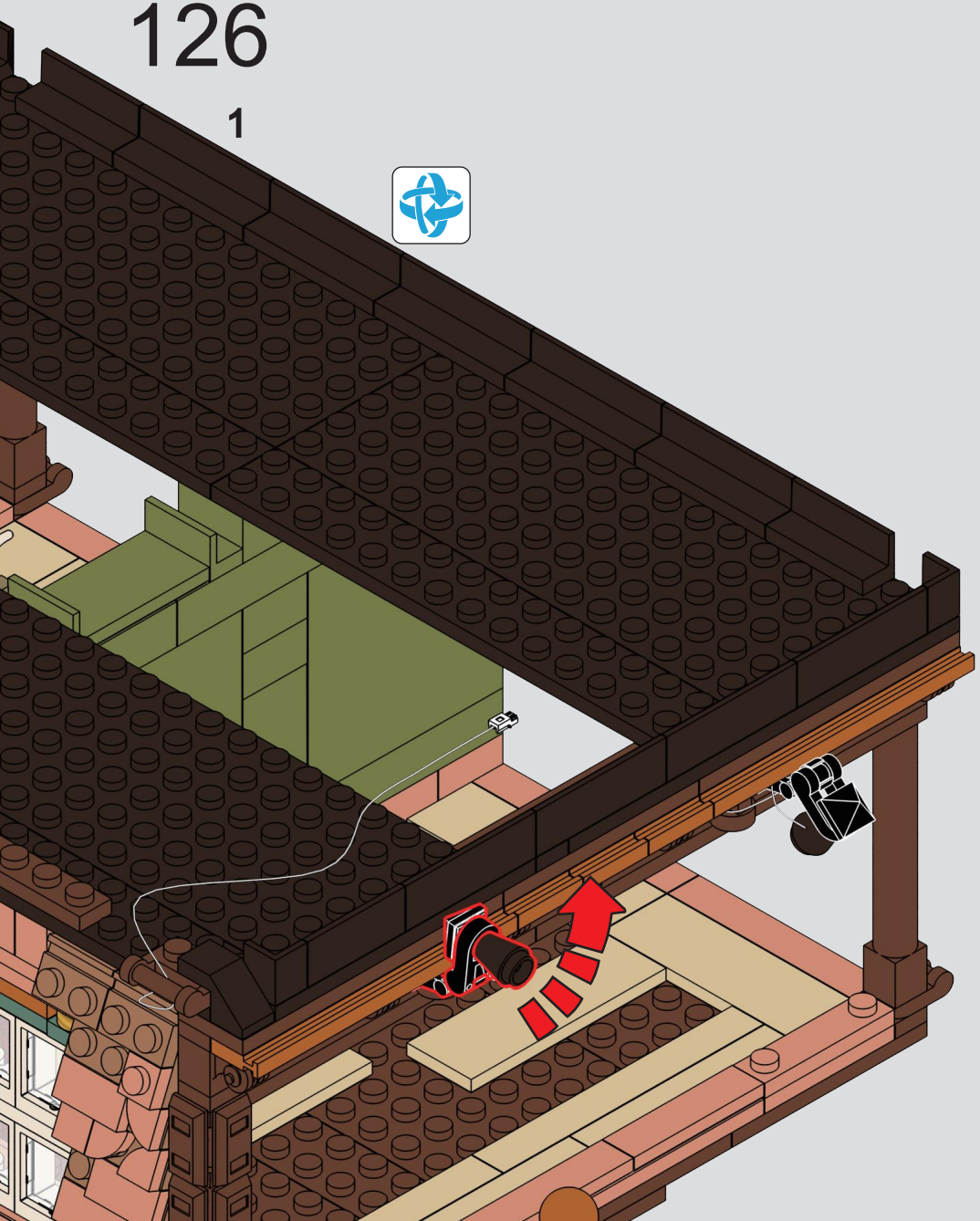

2

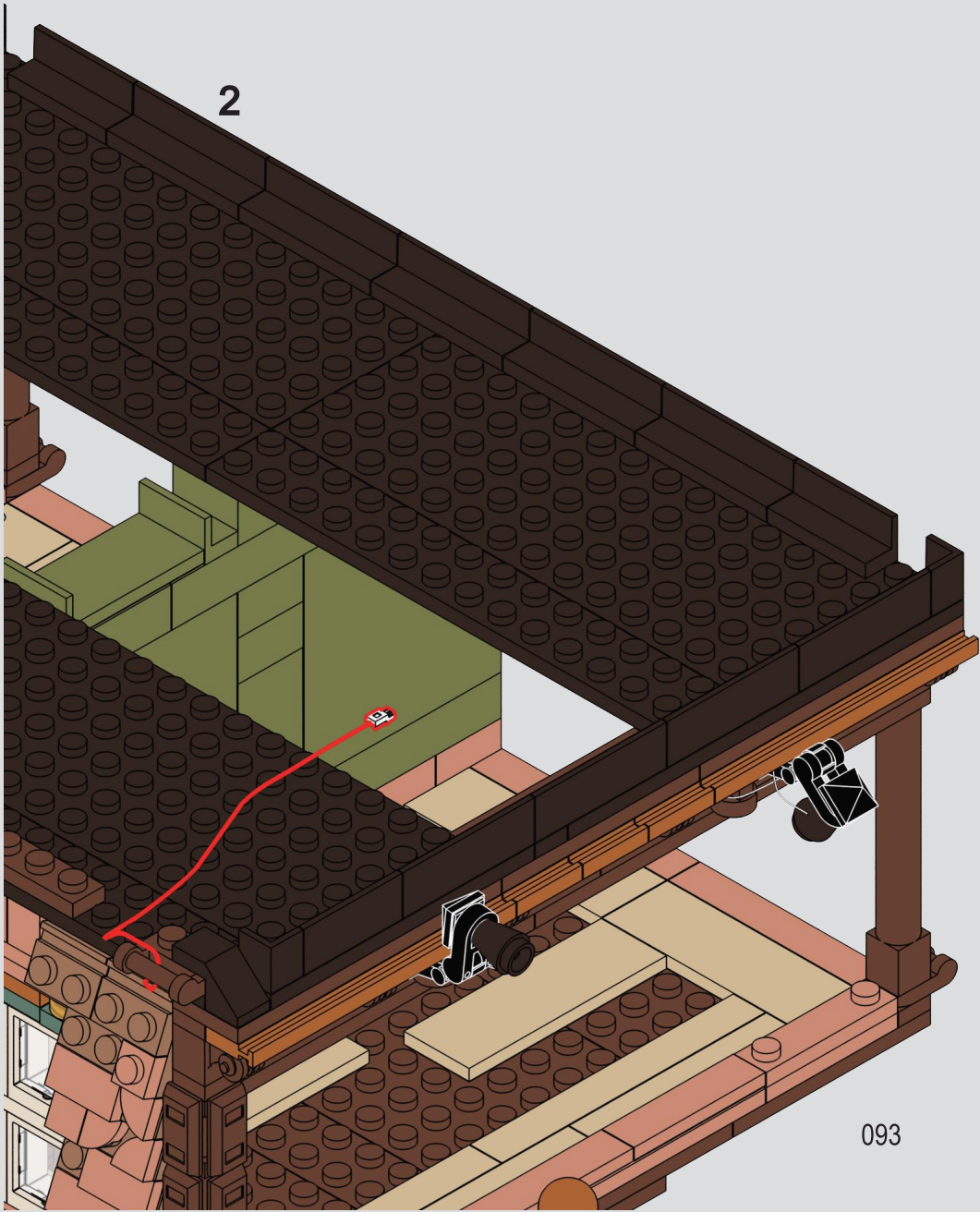

3

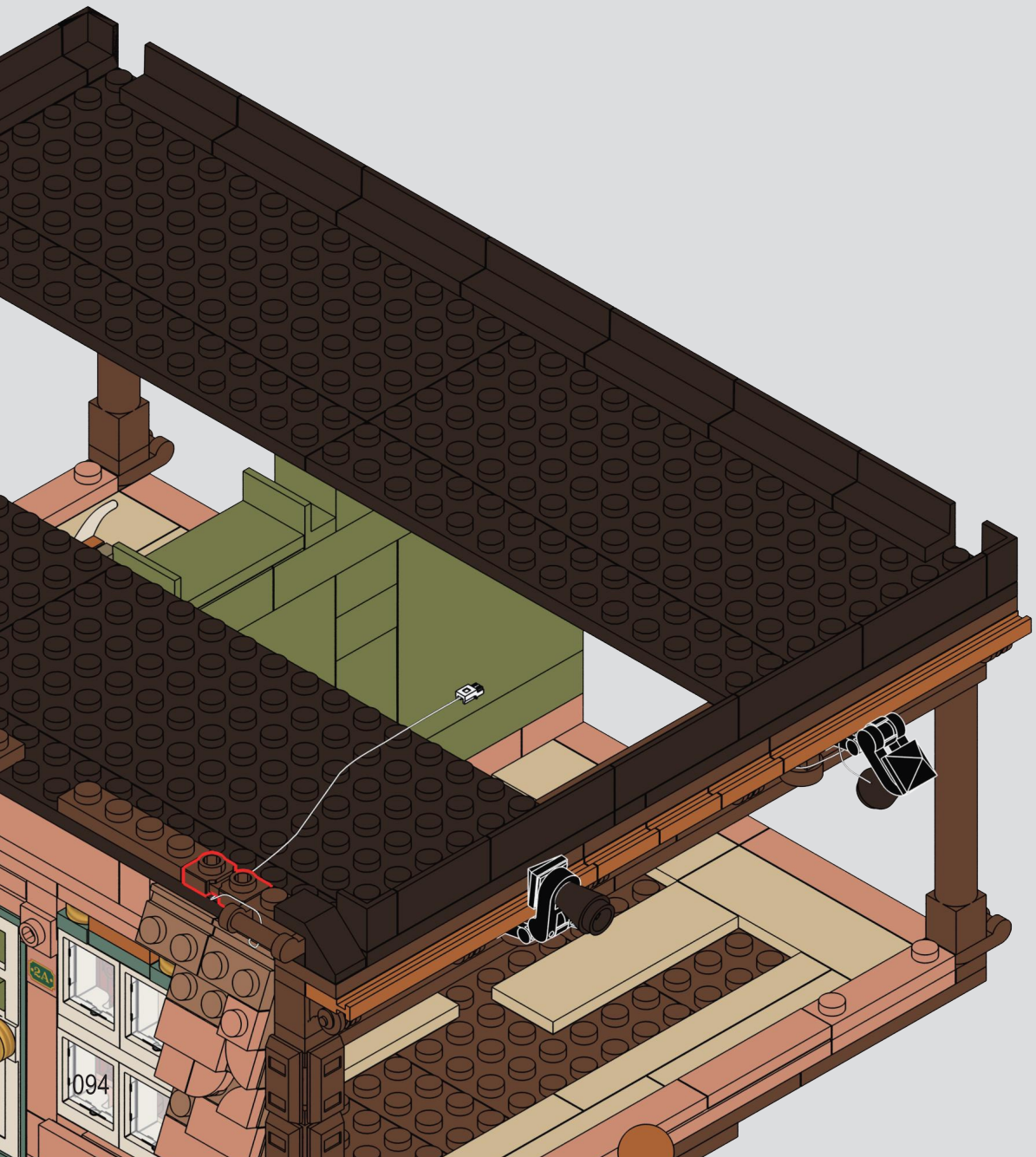

4

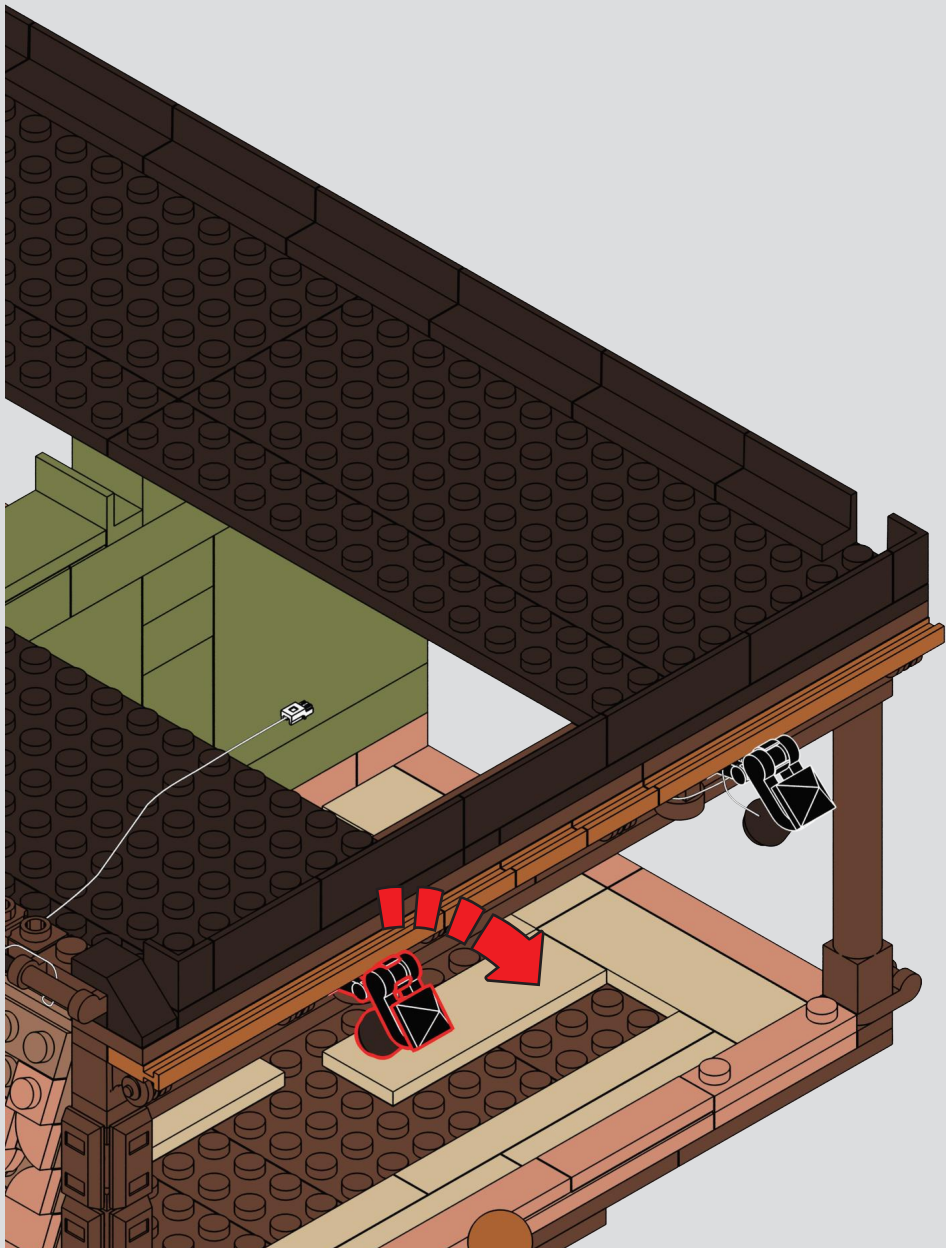

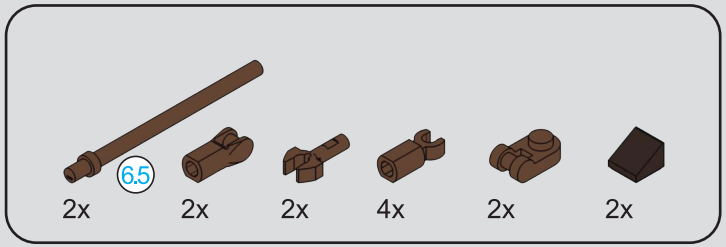



127

1

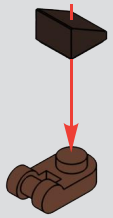

2

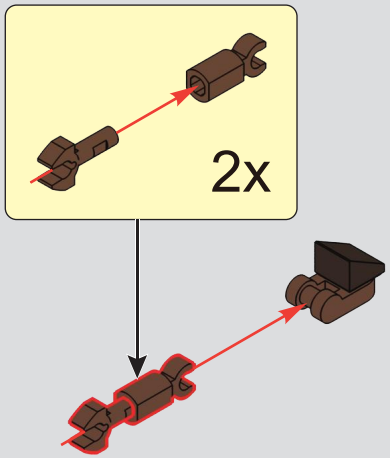

3

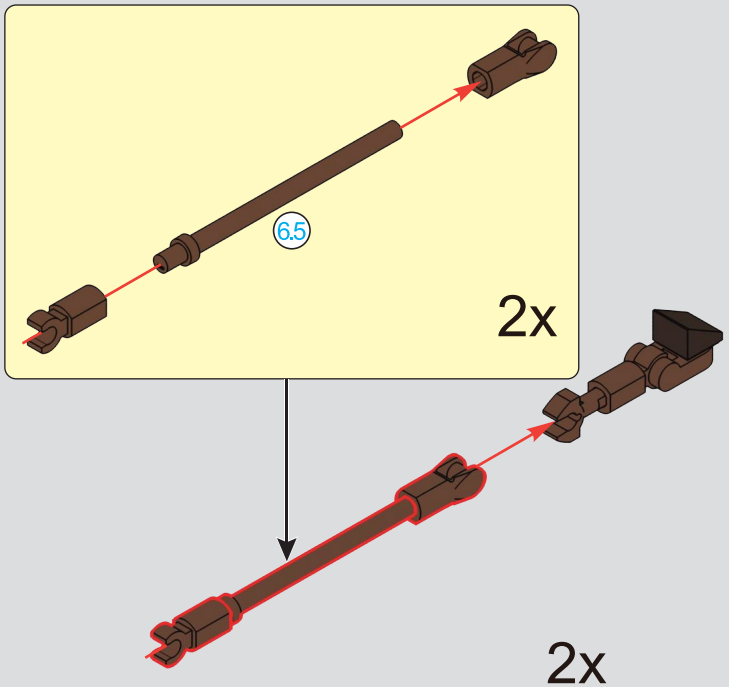

128

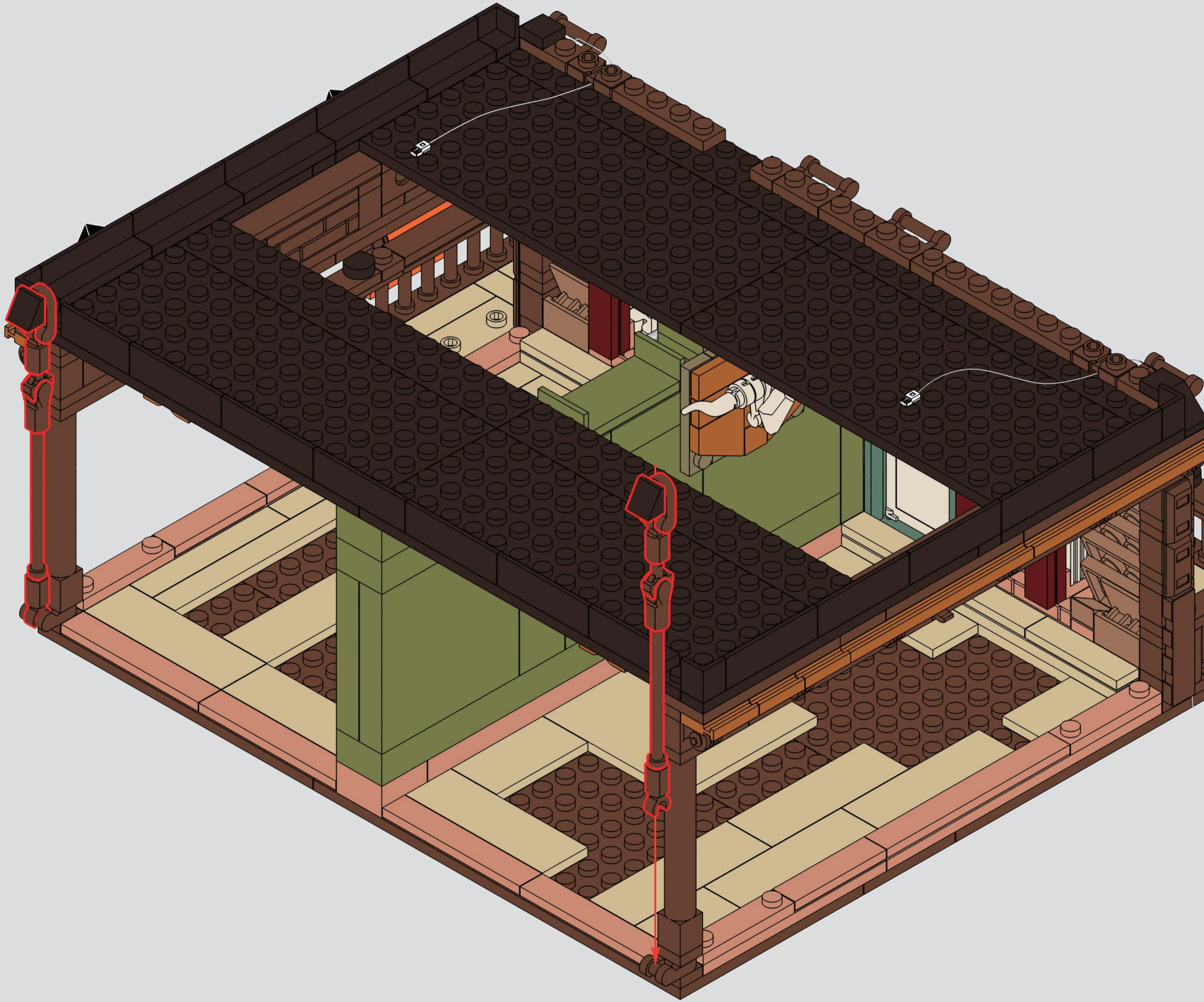

129

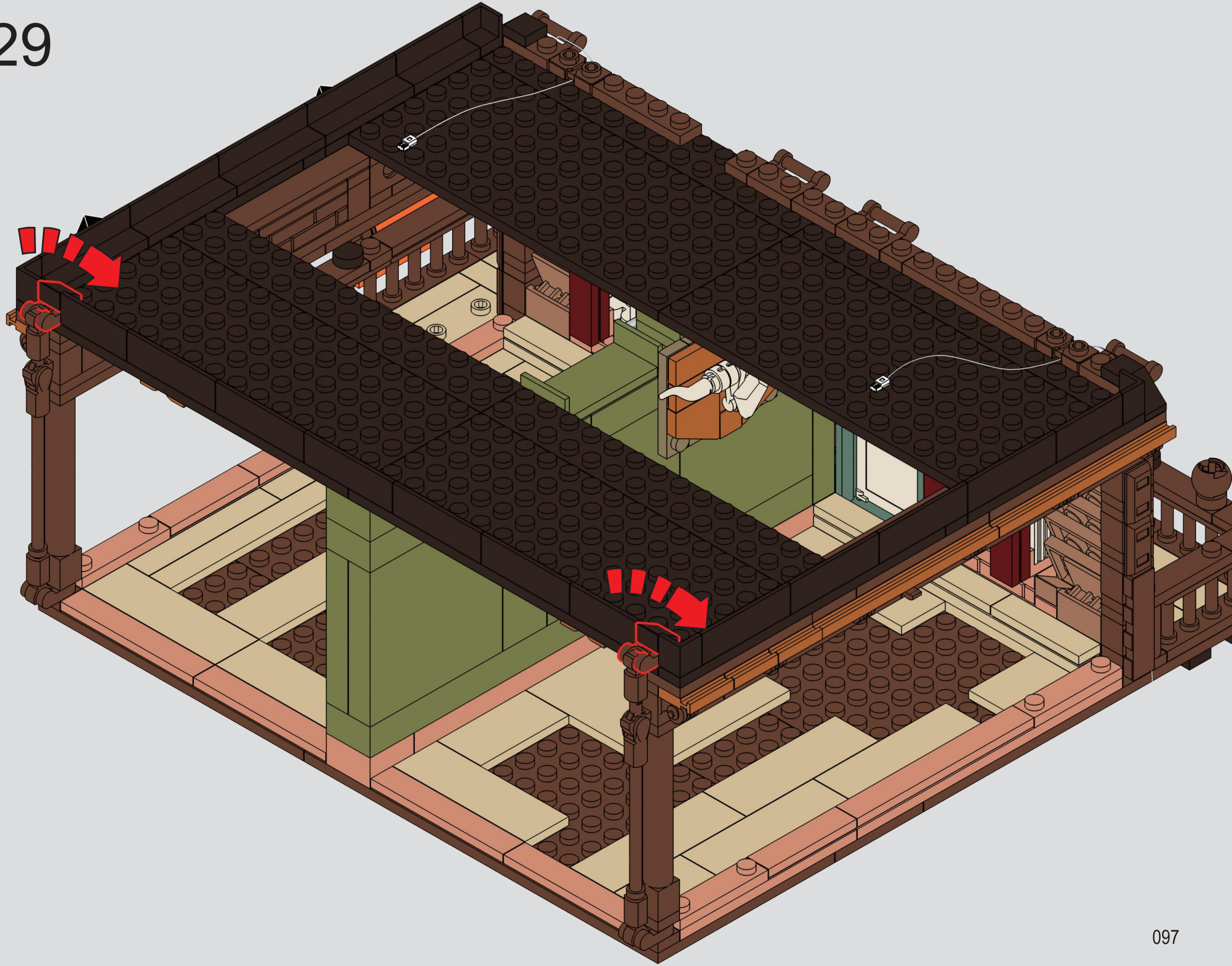

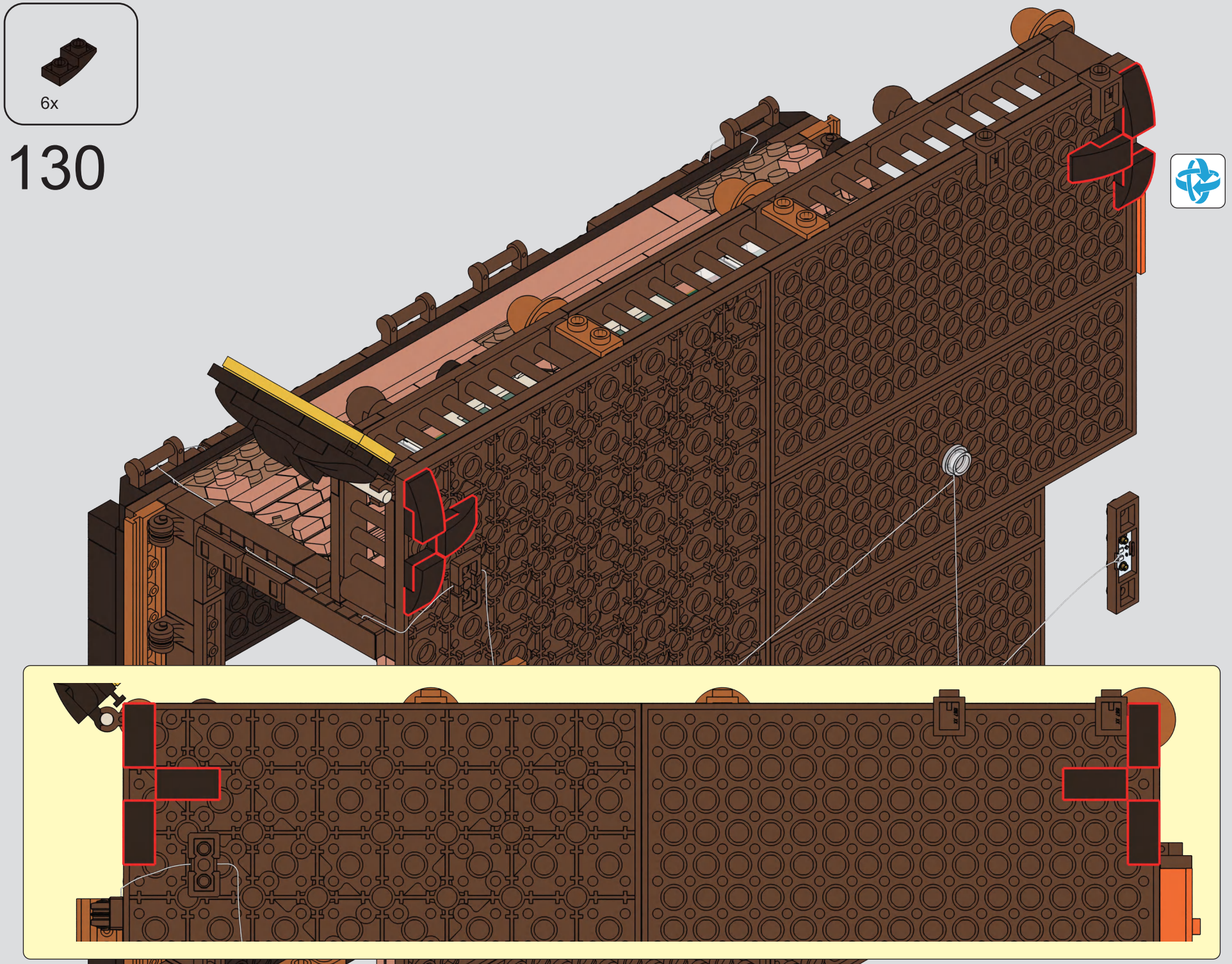
6x
130

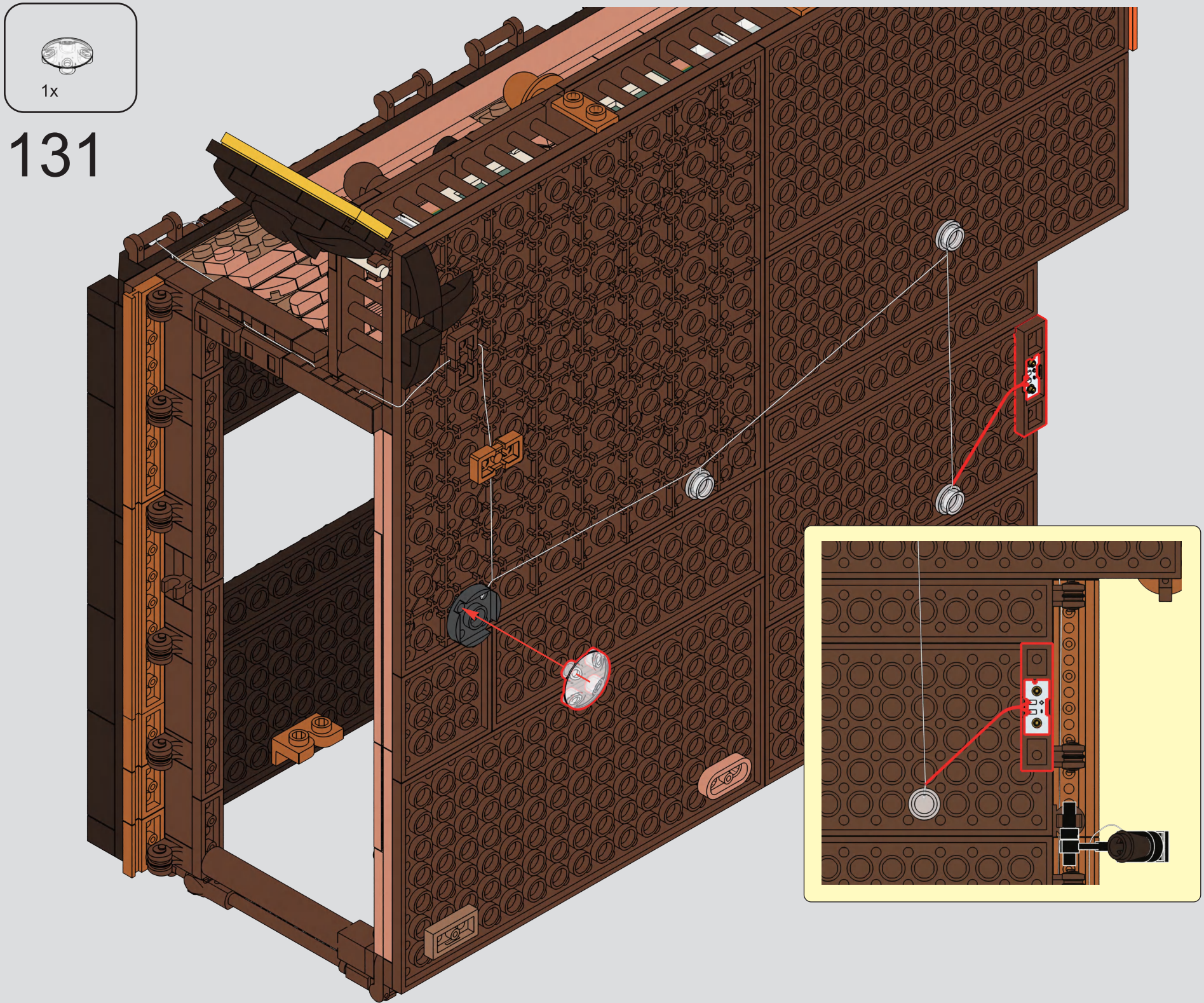
1x
131

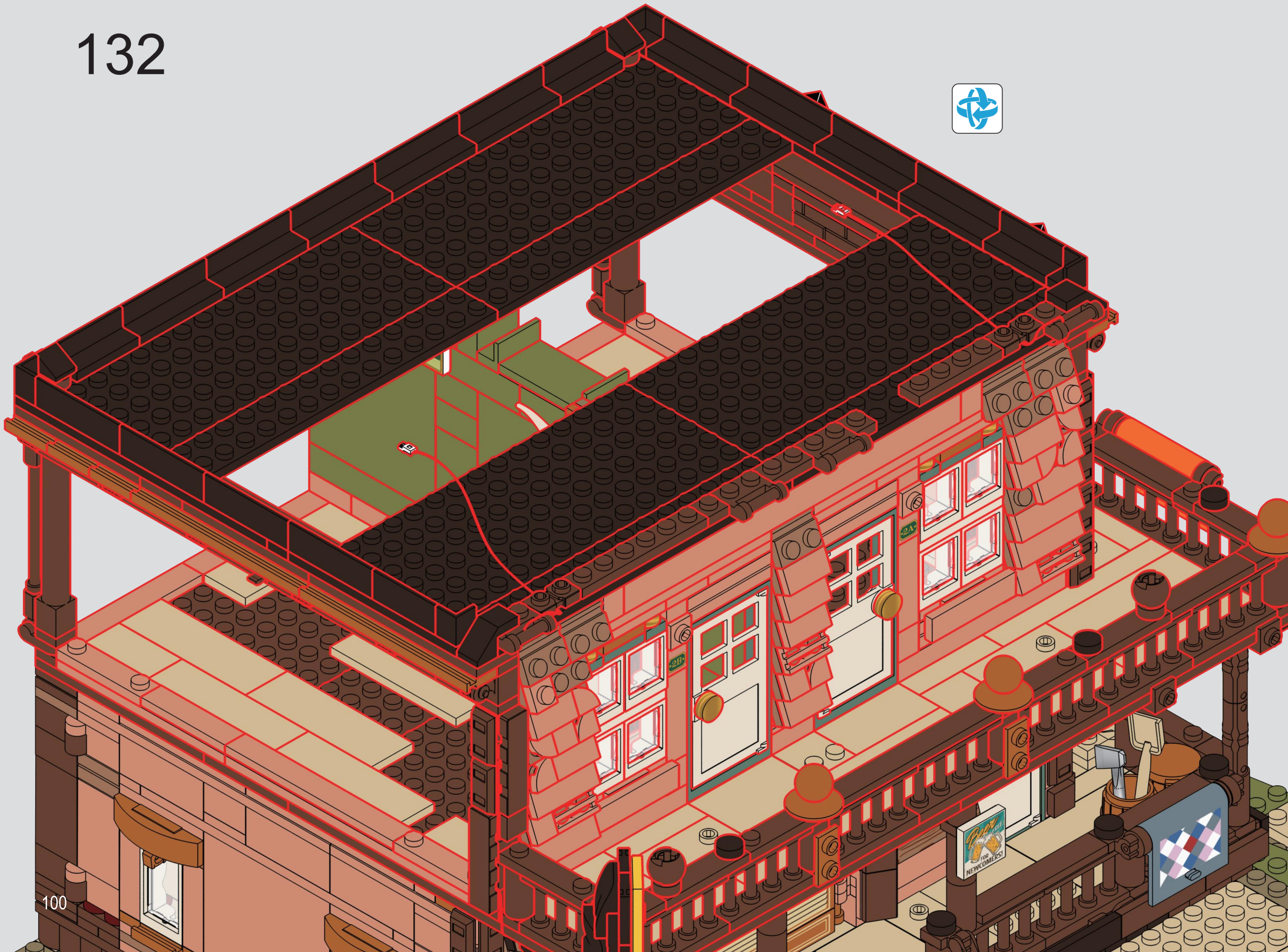
2A
2B
FOR NEWCOMERS!

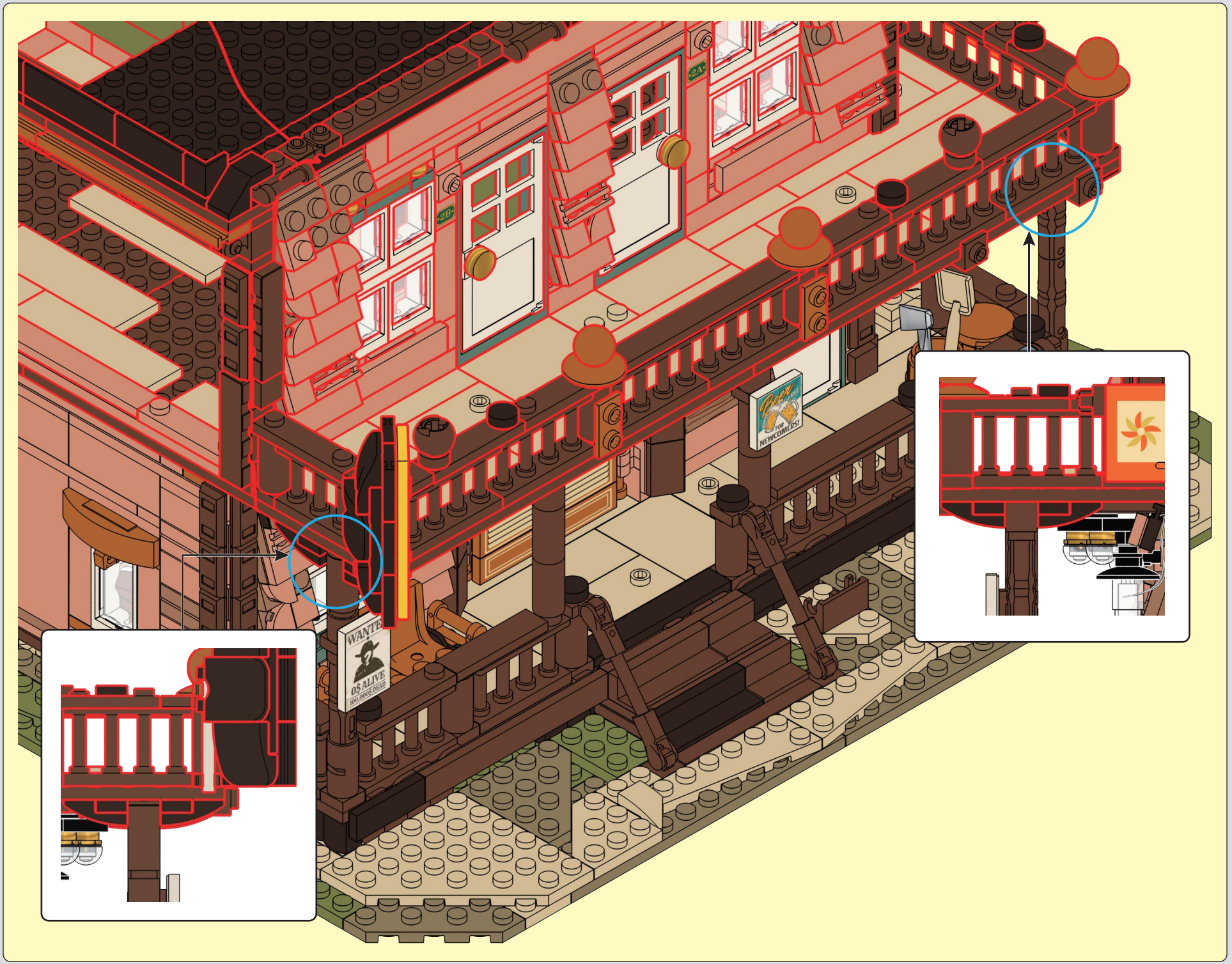
WANTED
0$ ALIVE
100.000$ DEAD
FOR NEWCOMERS!

133

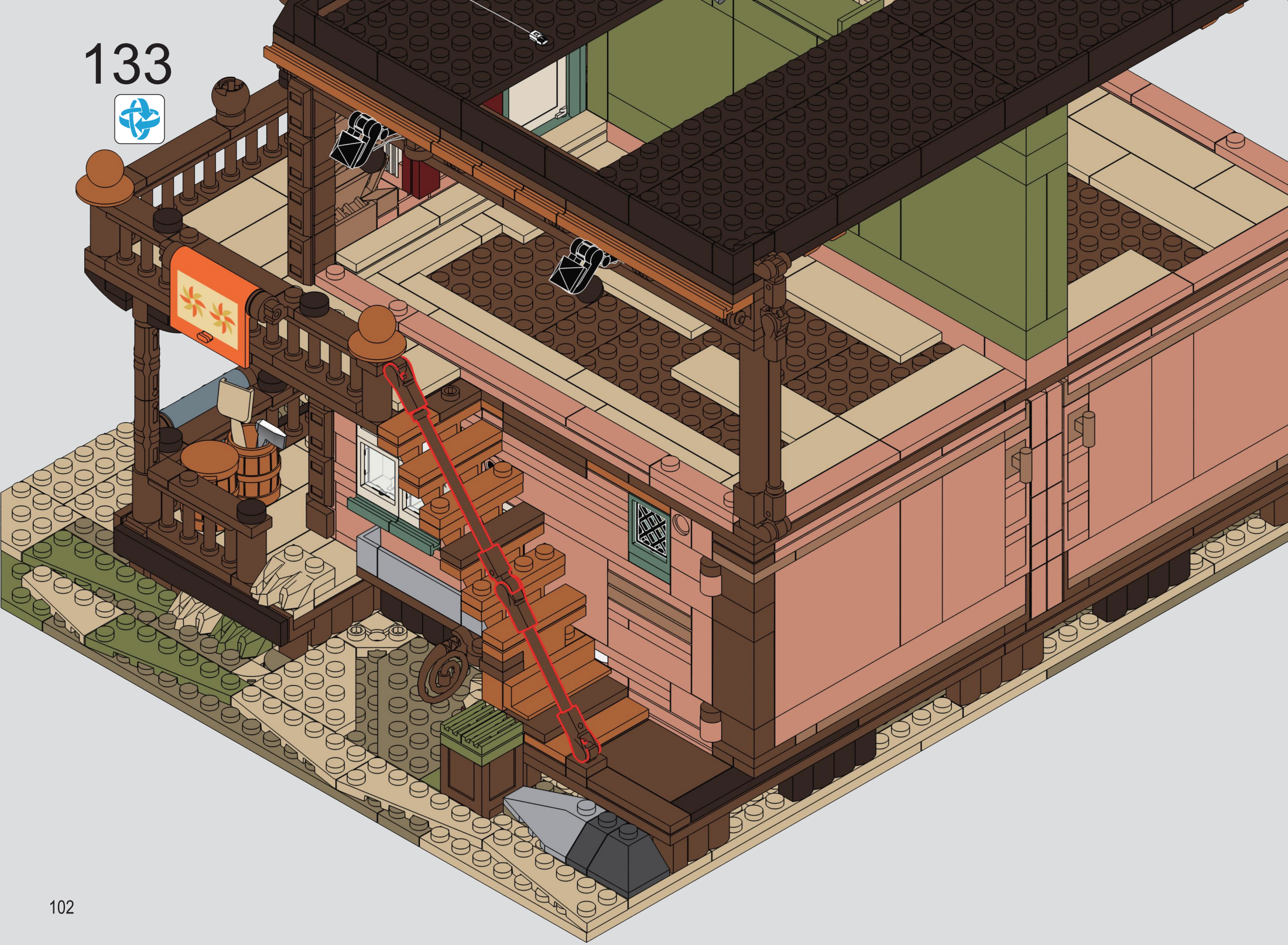


10


F



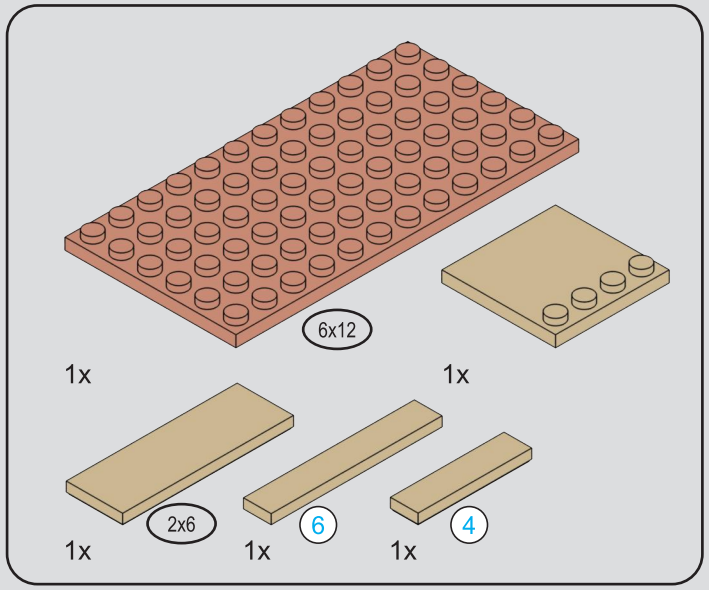

134

1

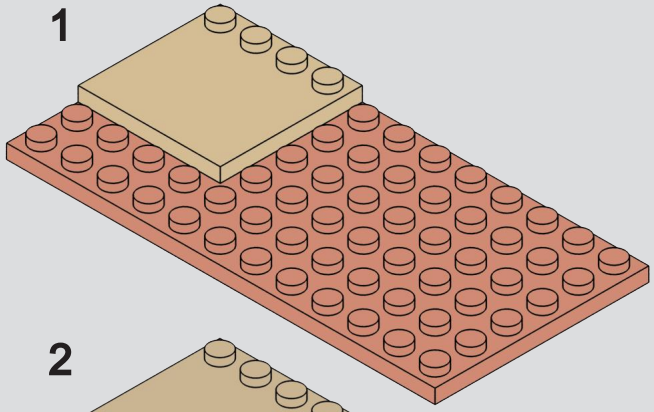

2

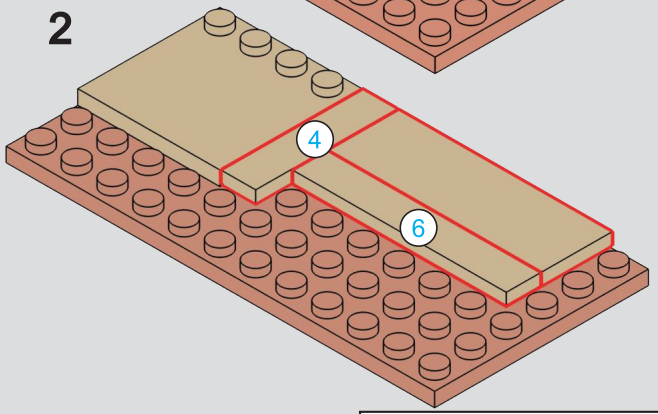





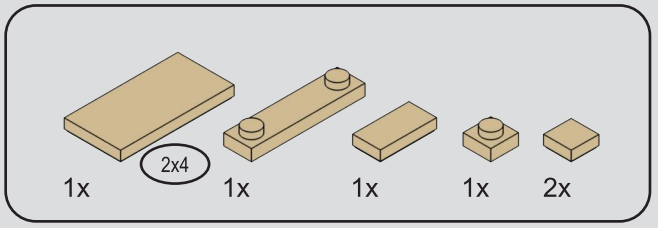

135

1

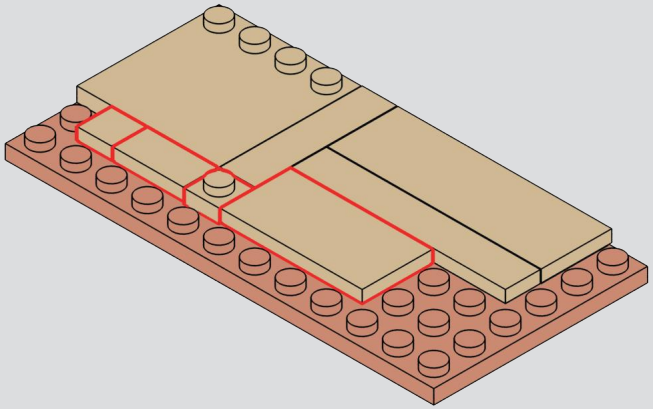

2

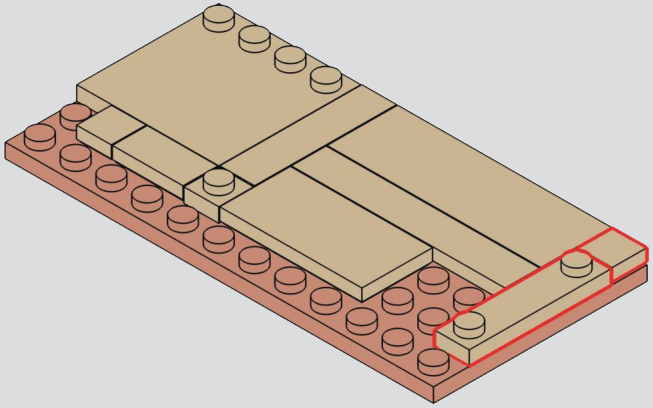

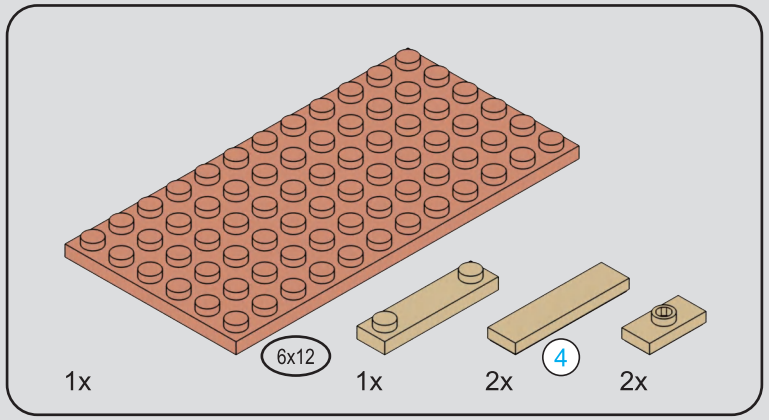



136

1

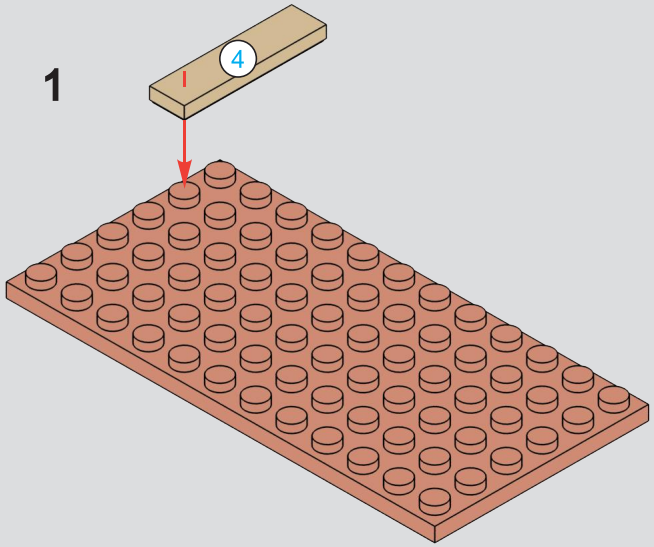

2

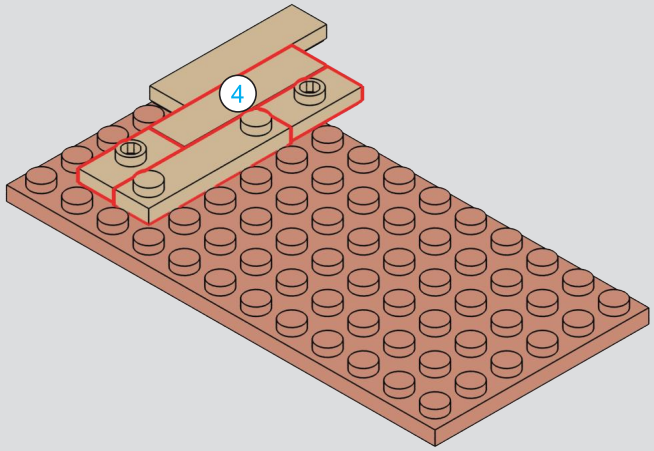

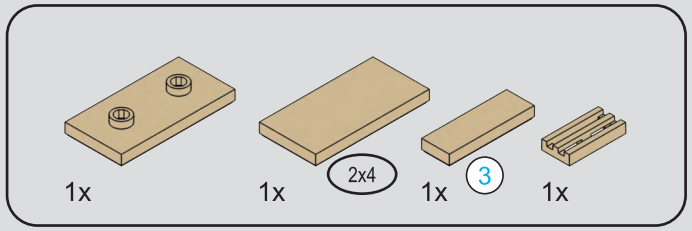

137

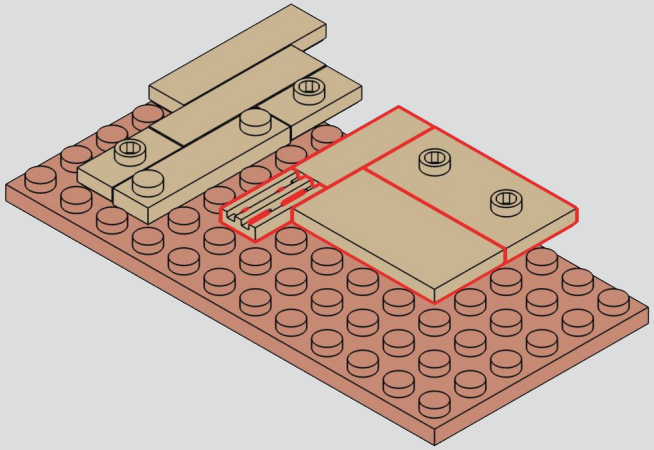

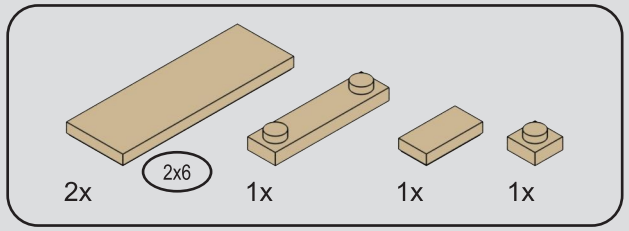

138

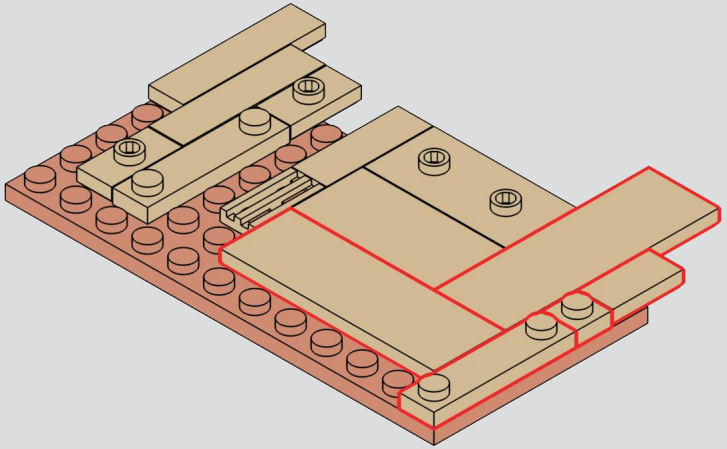

139

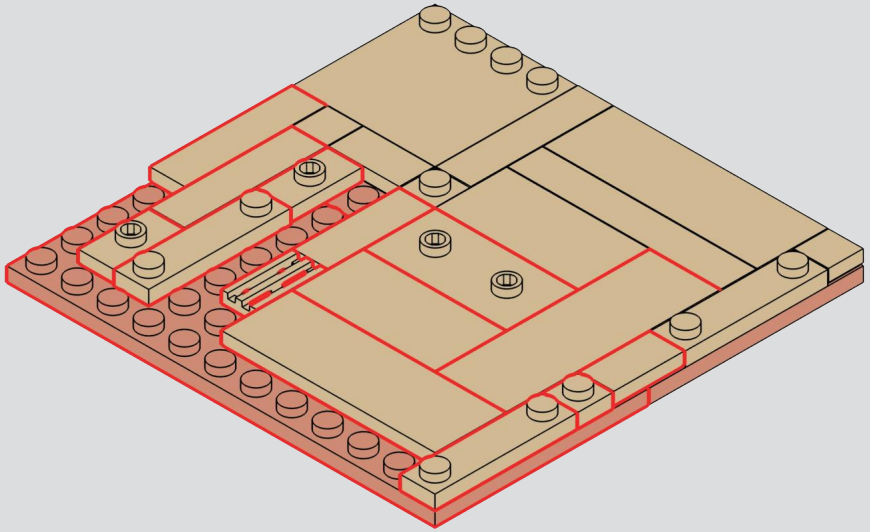

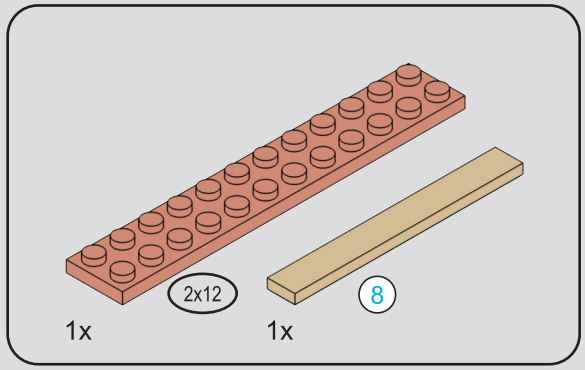

140

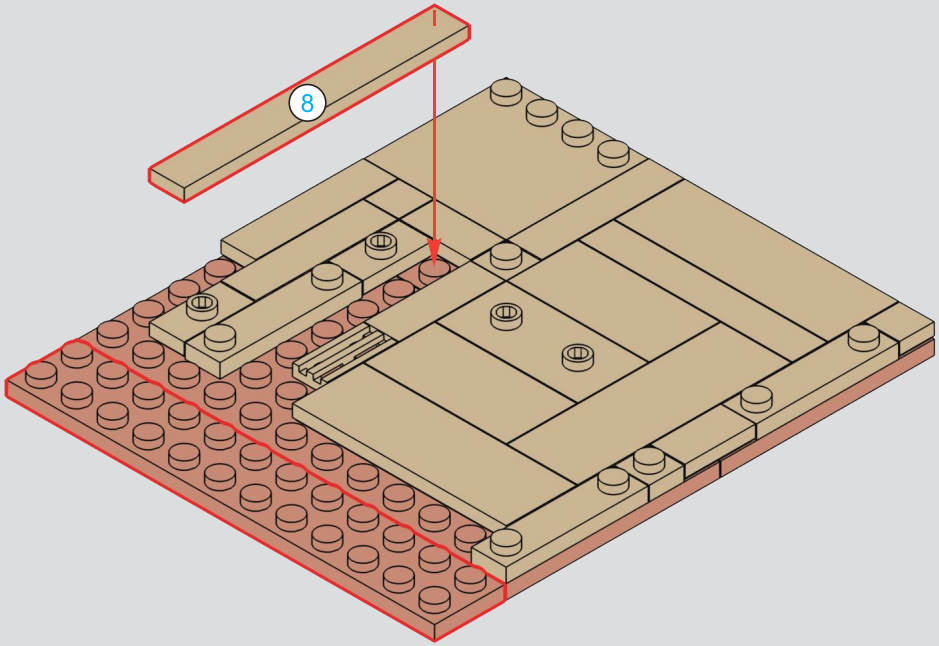



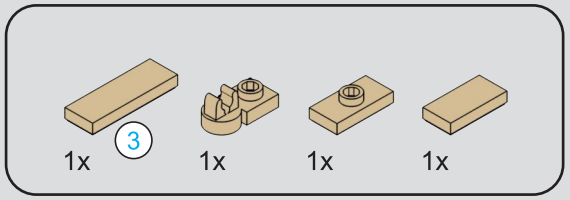

141

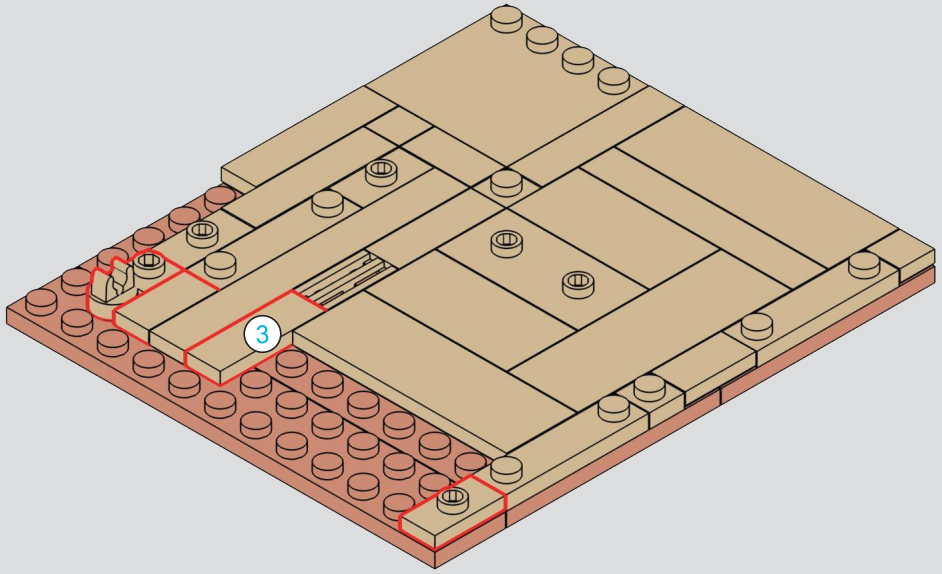

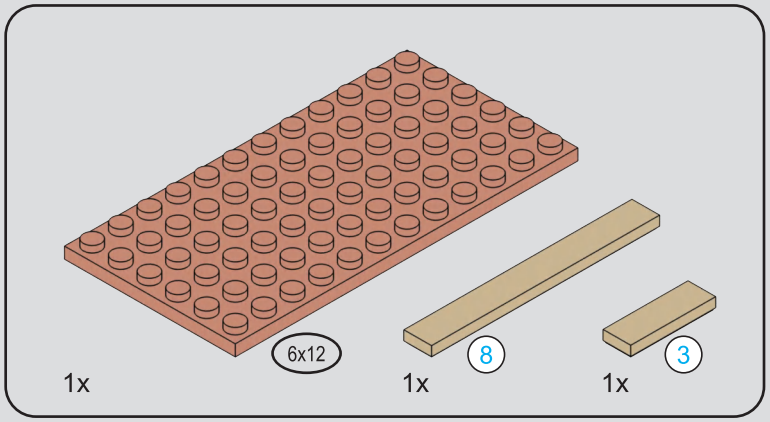

142

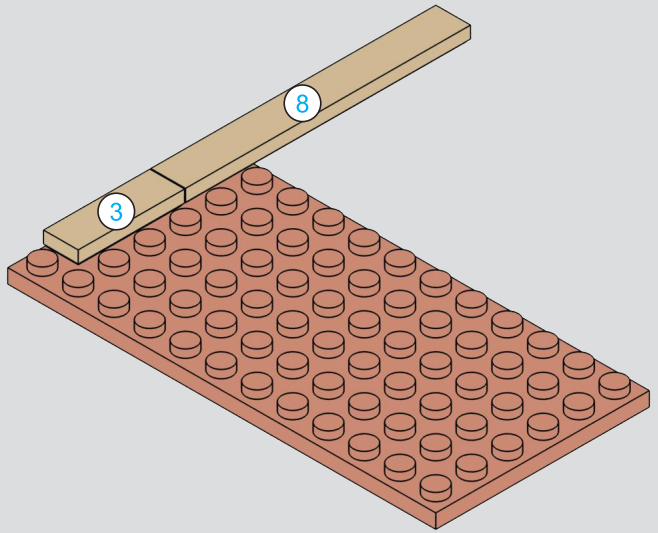



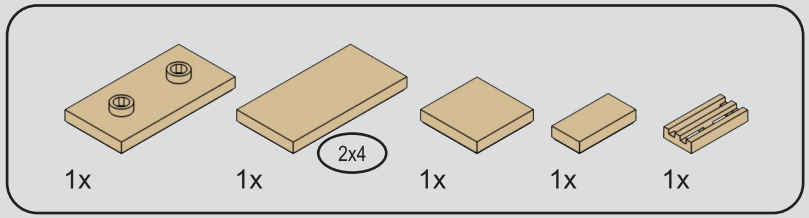

143

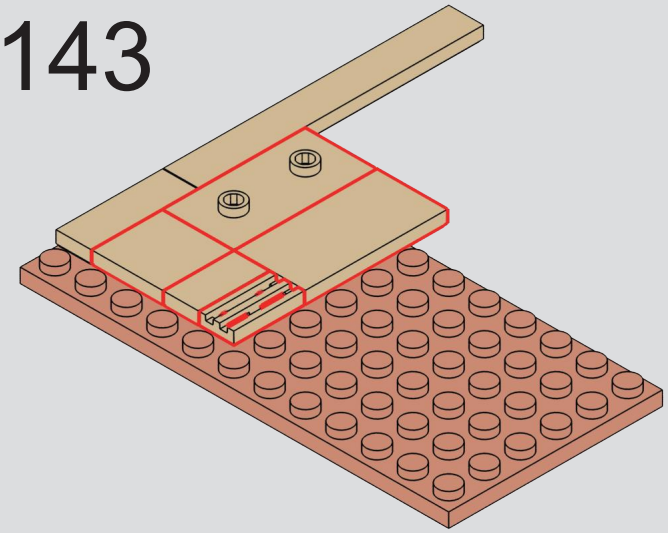

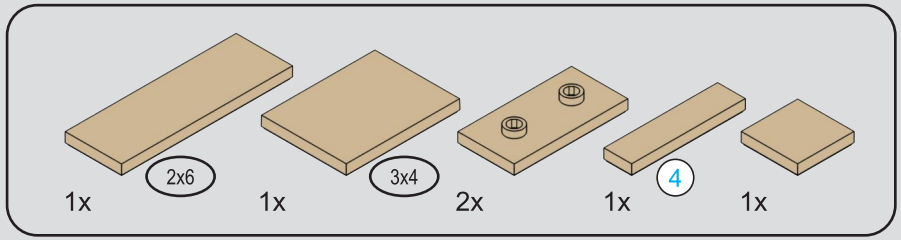

144

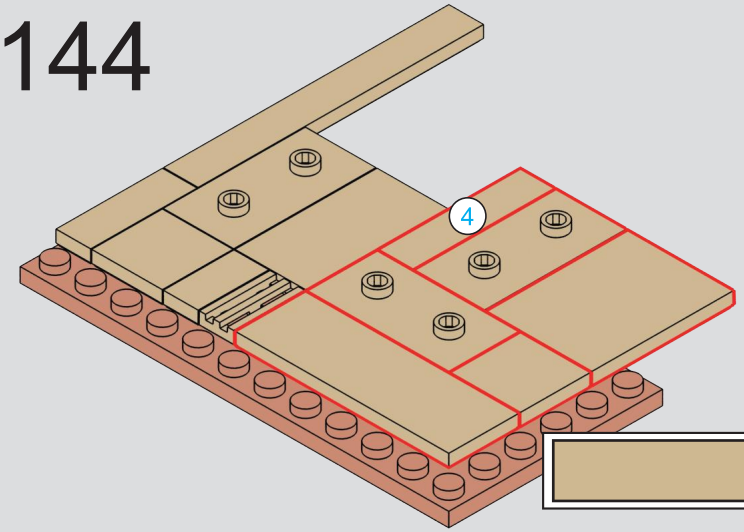

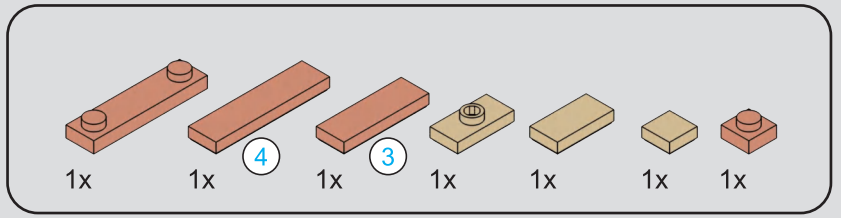

145

1

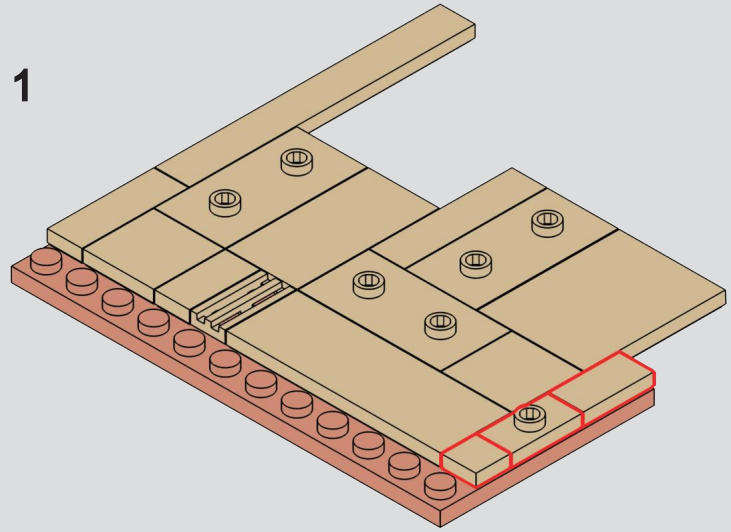

2

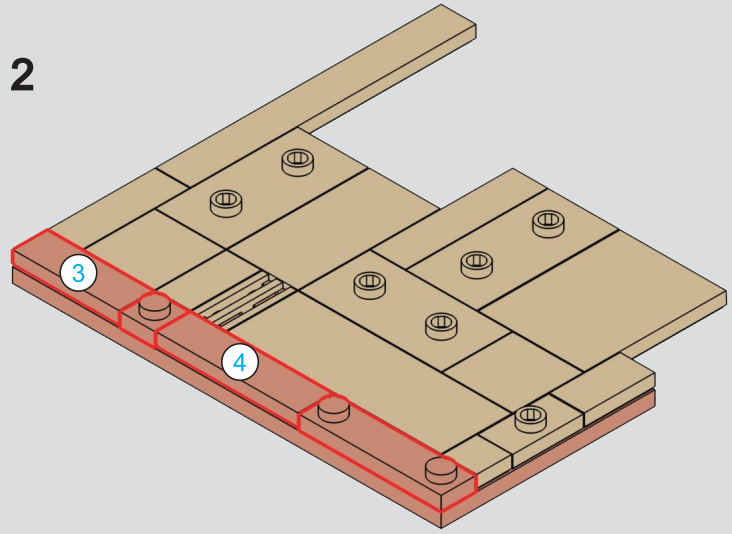



146

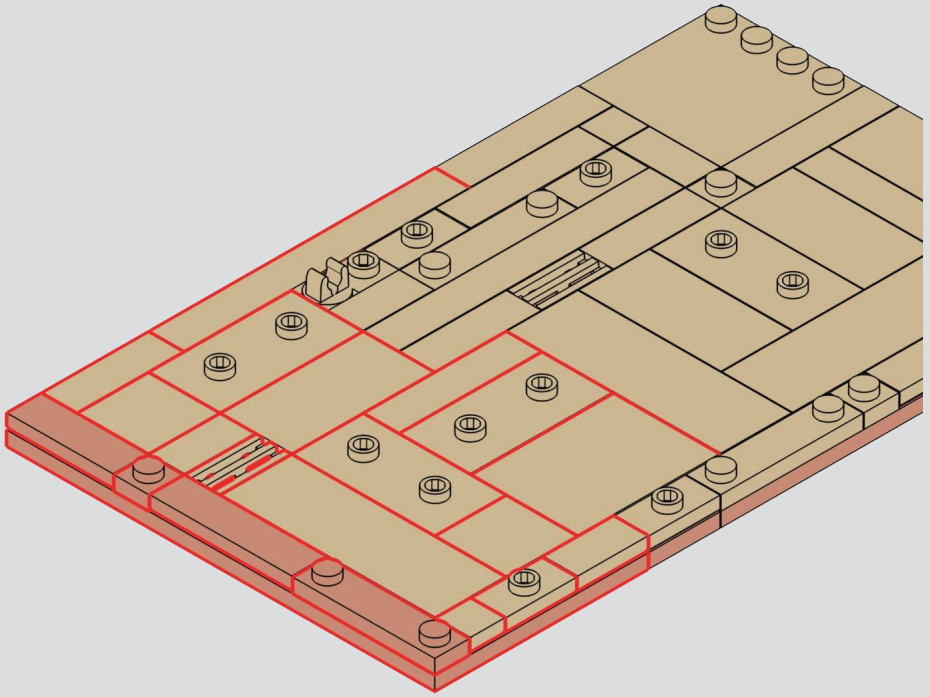

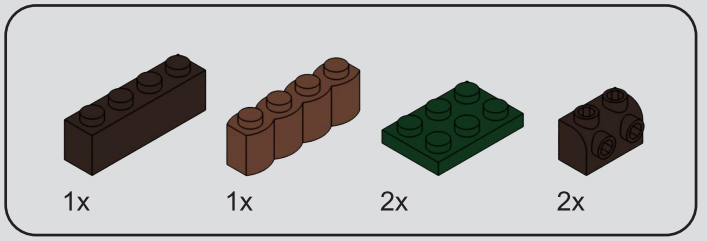

147

1

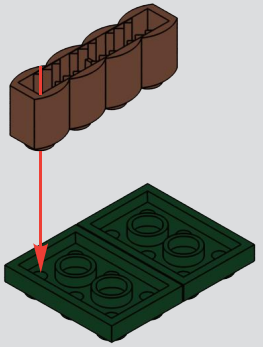

2

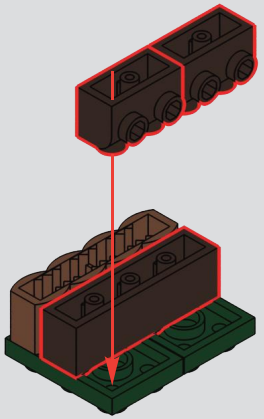

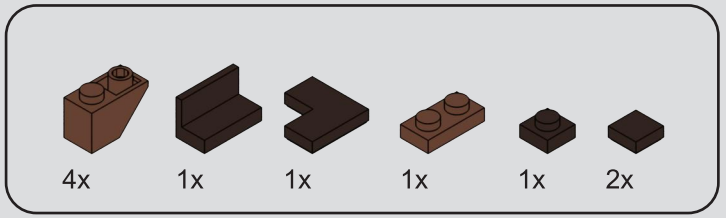

148

1

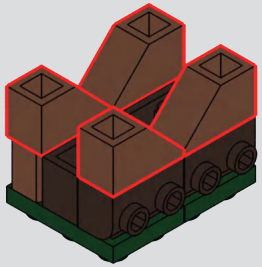

2

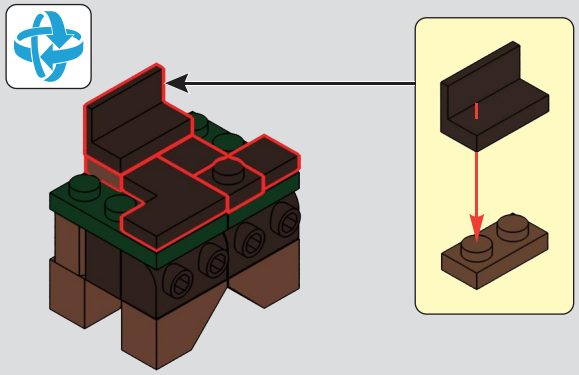

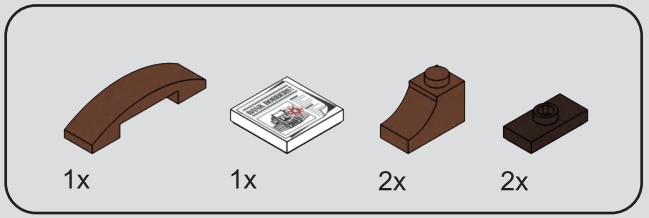

149

1

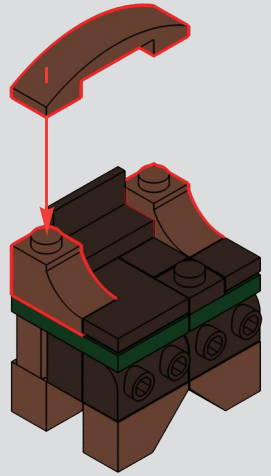

2

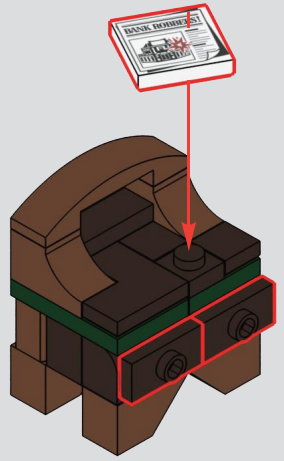

150

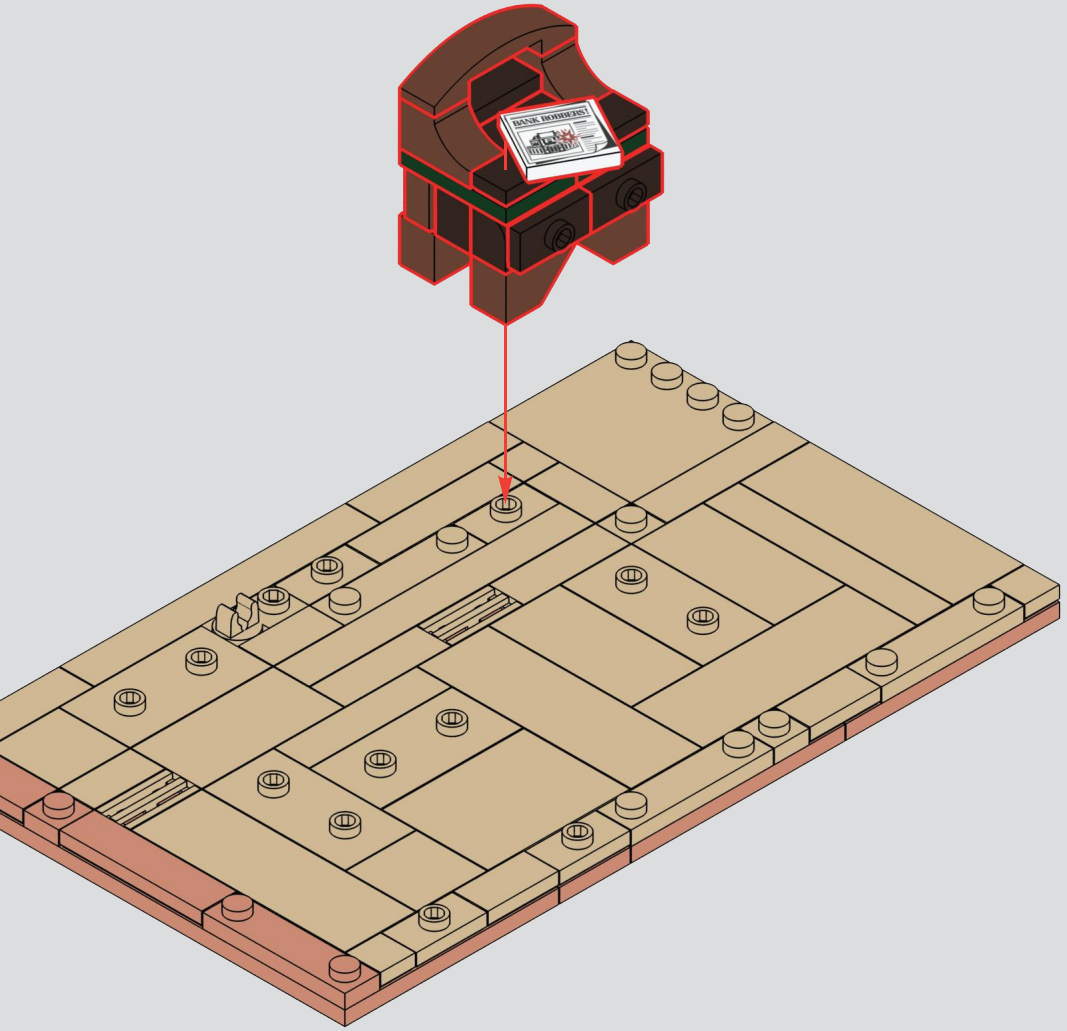

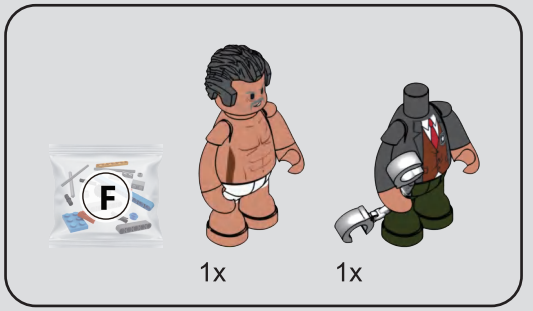

151

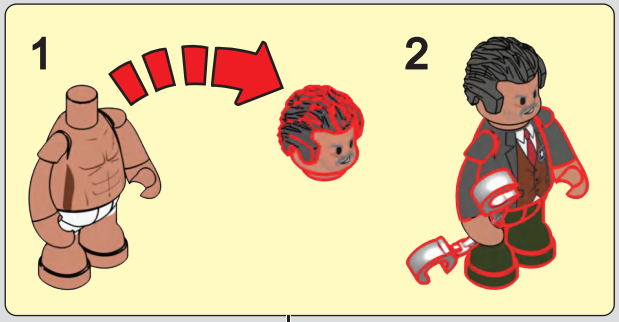

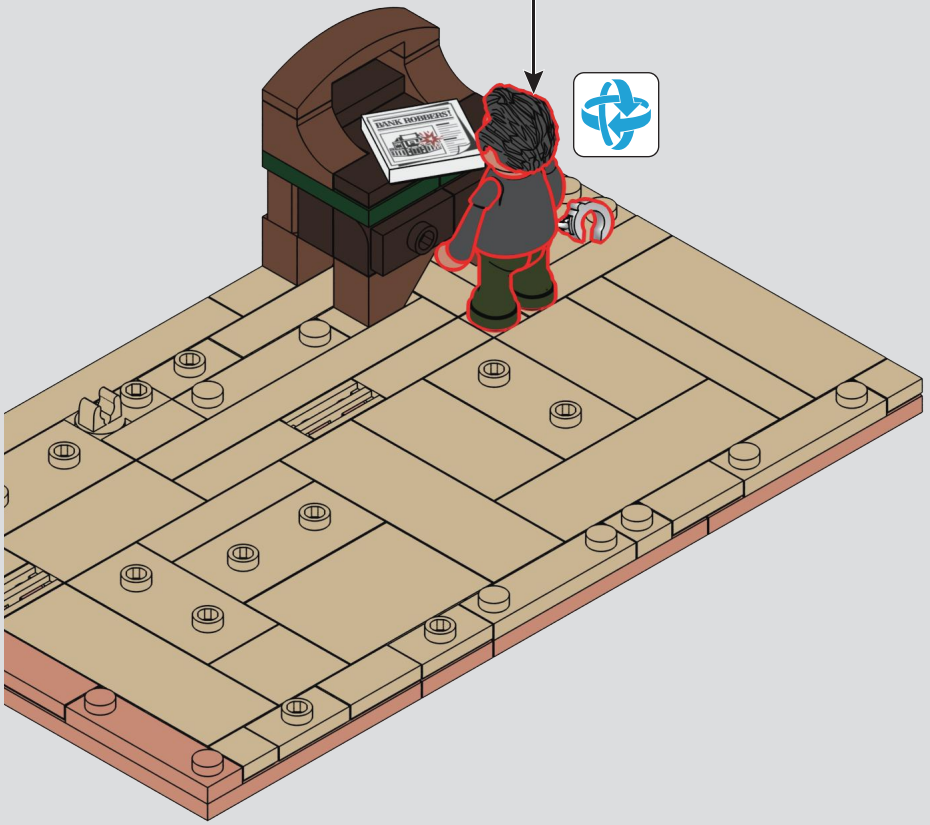

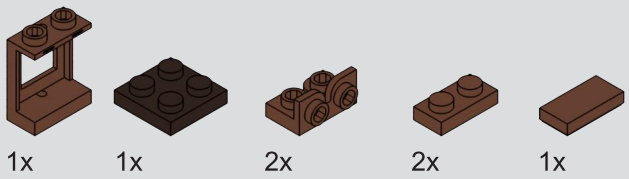

152

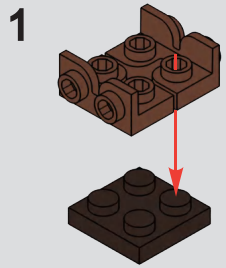

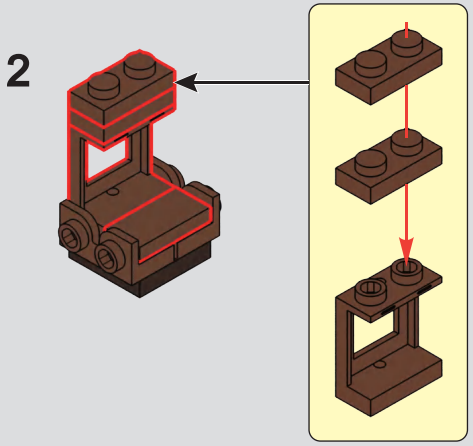

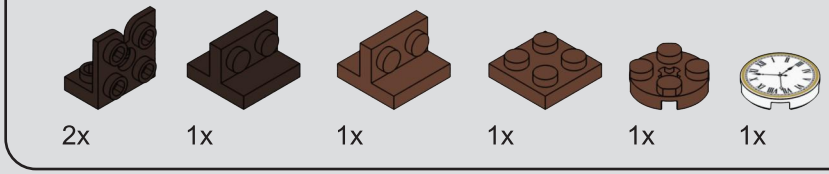

153

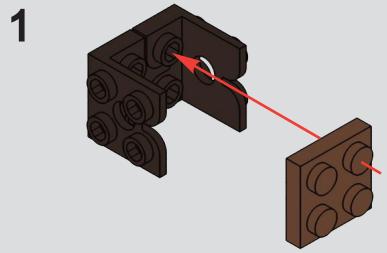

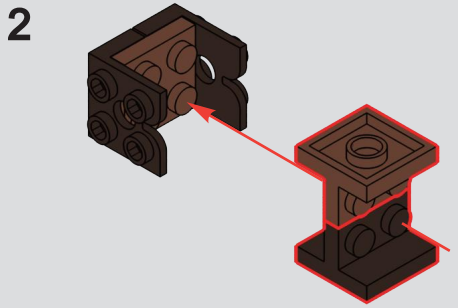

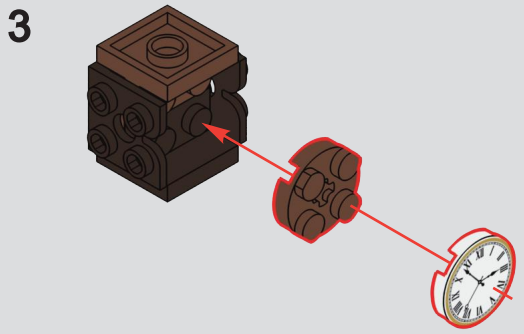

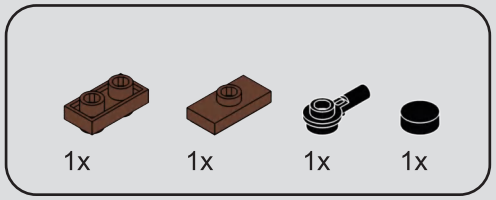

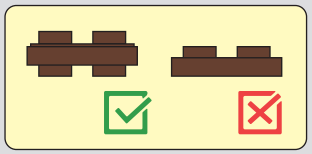

154

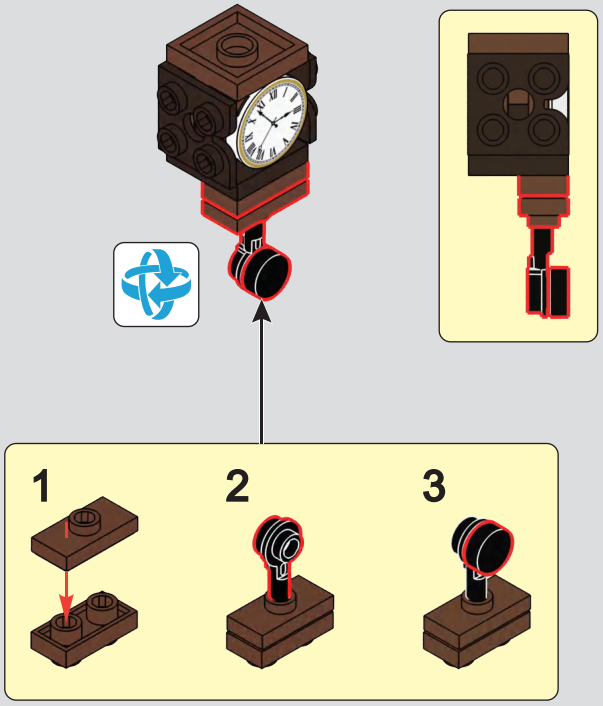

155

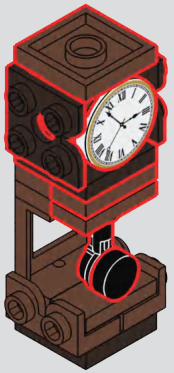

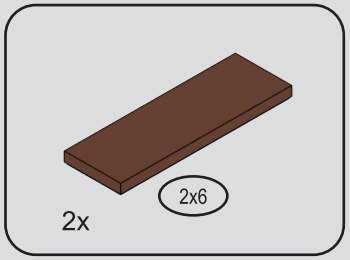

156

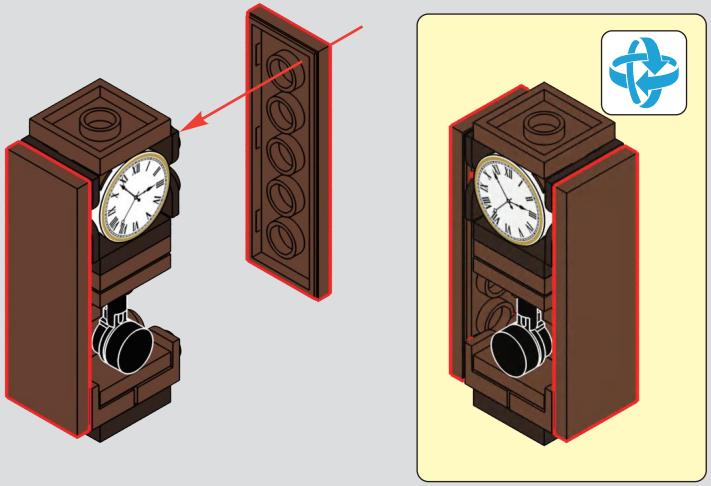

157

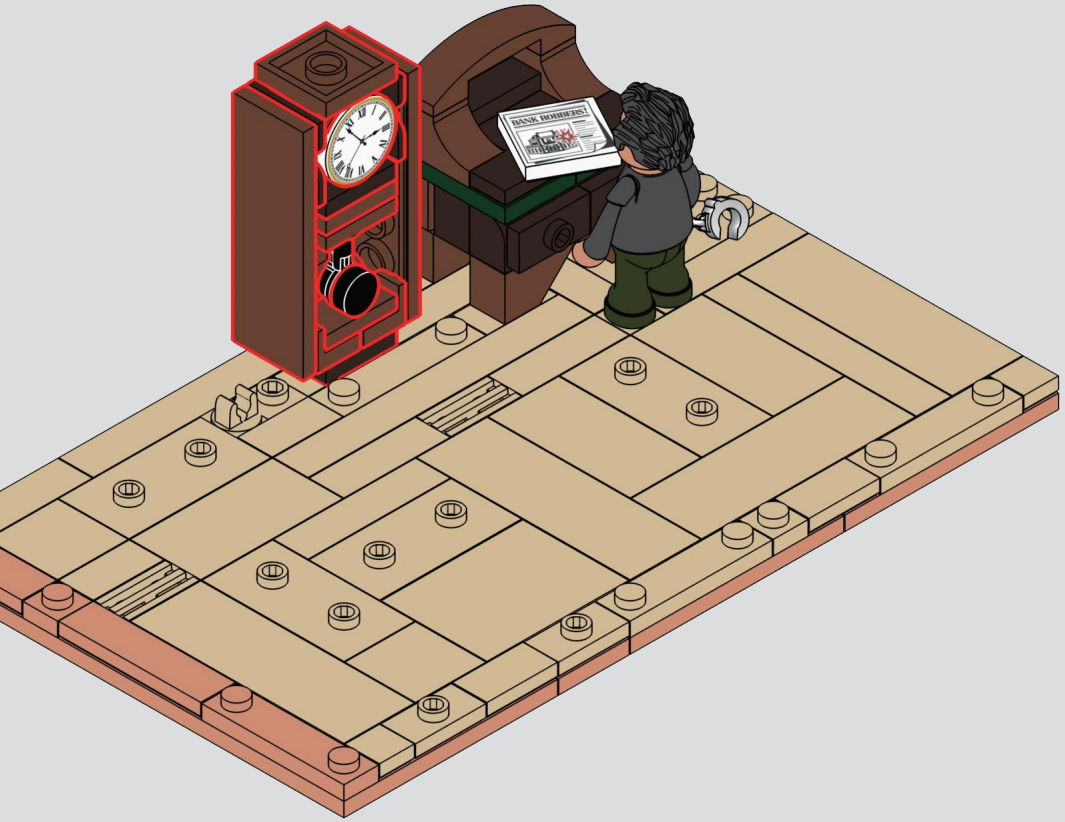

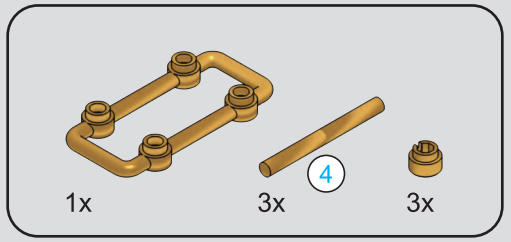

158

1

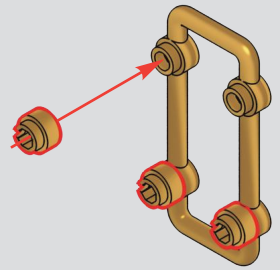

2

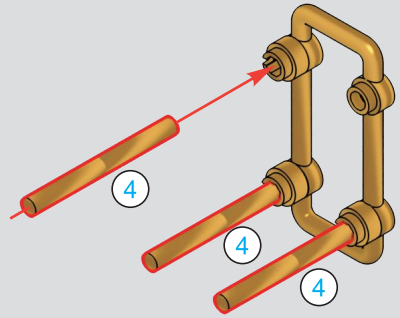

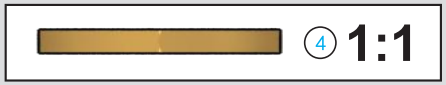

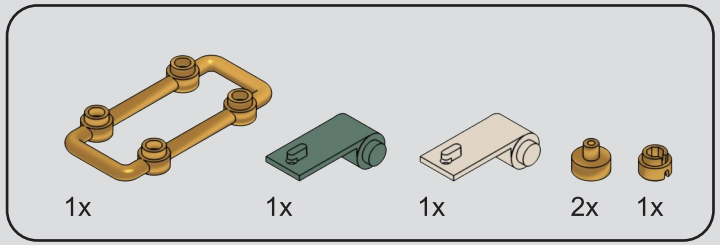

159

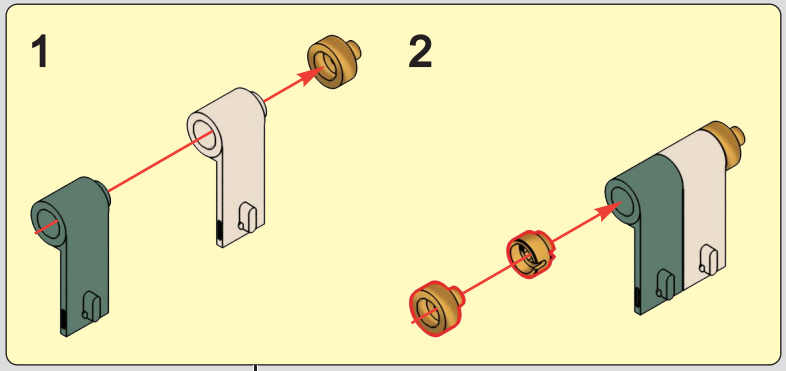

1

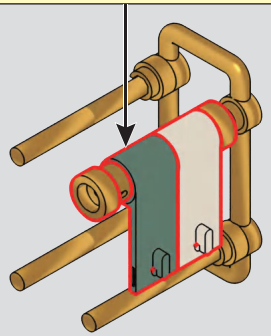

2

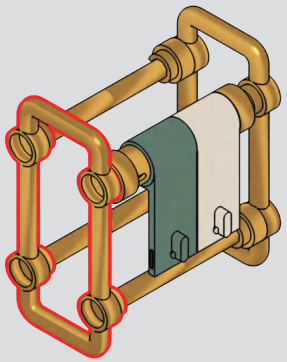

160

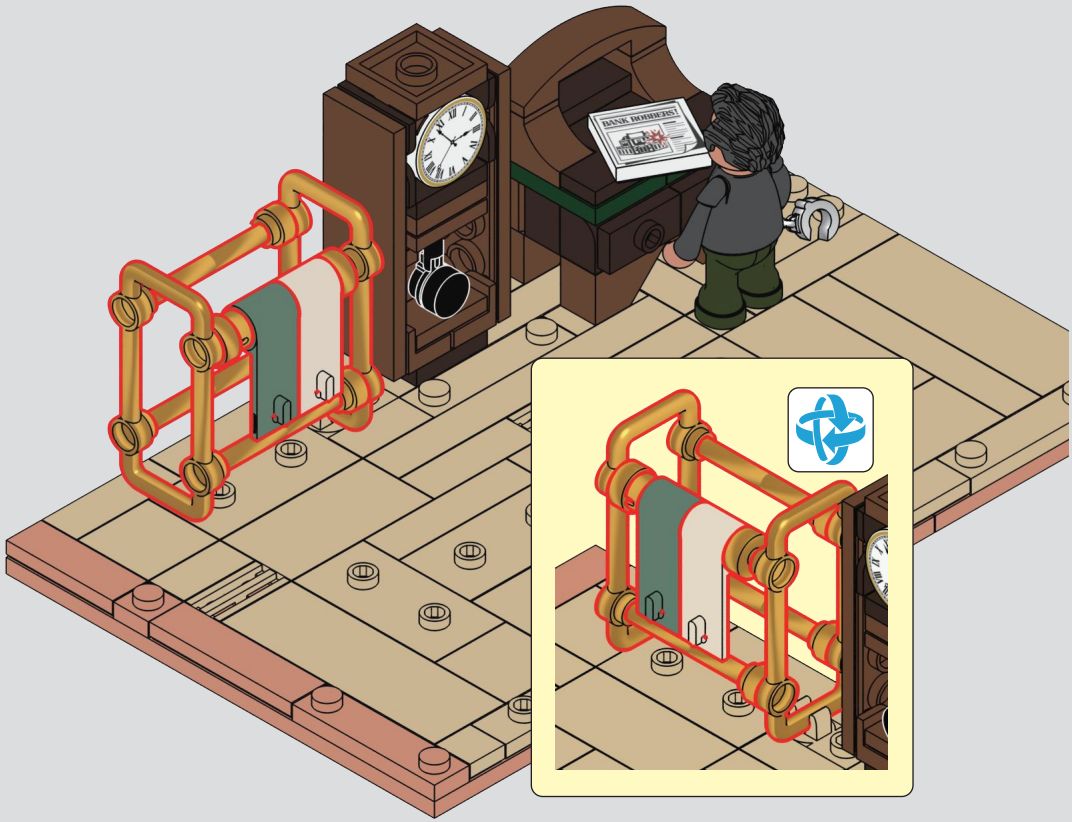

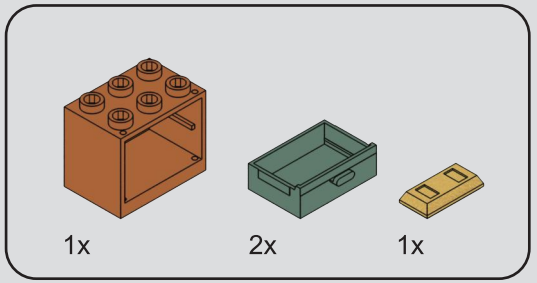

161

1

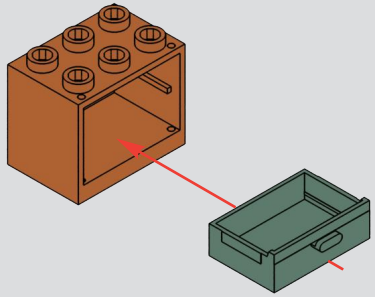

2

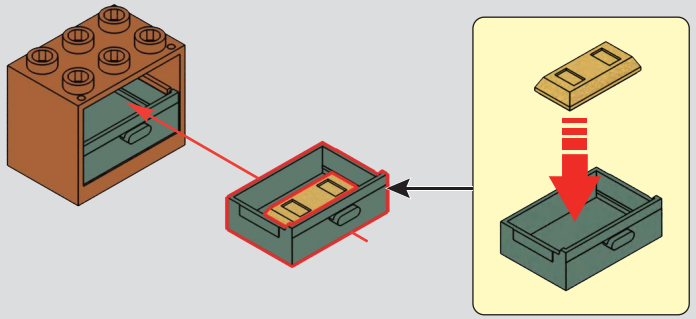

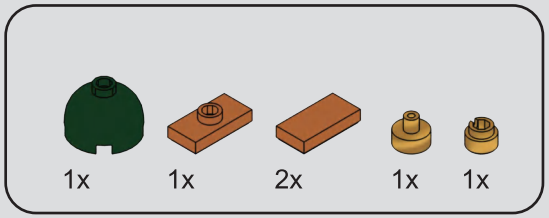

162

1

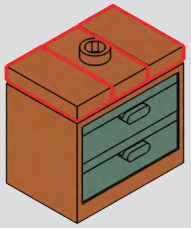

2

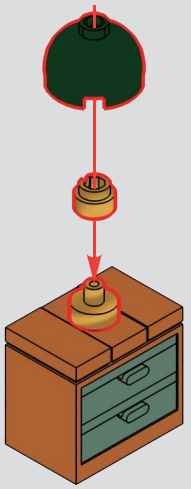

163

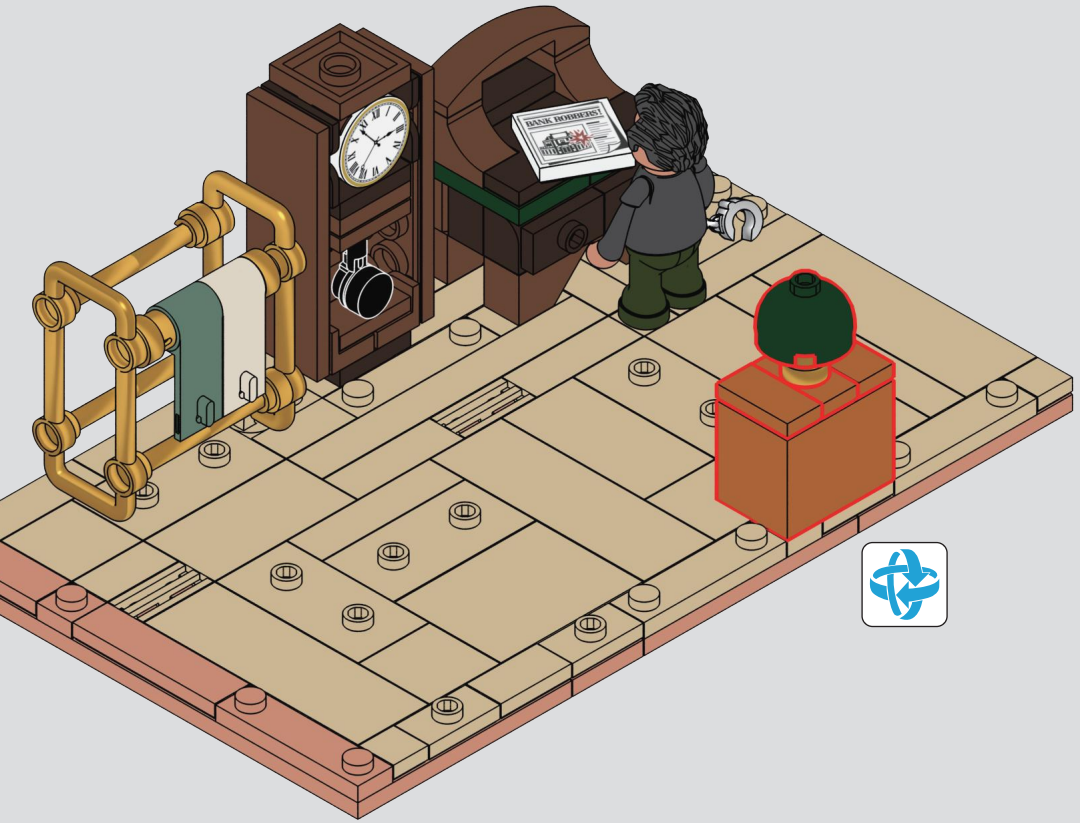

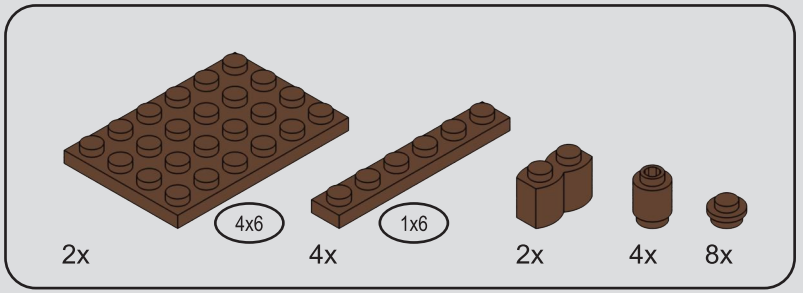

164

1

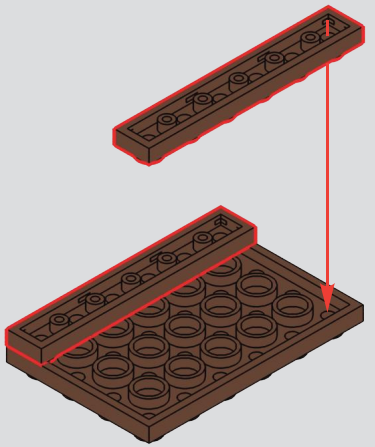

2

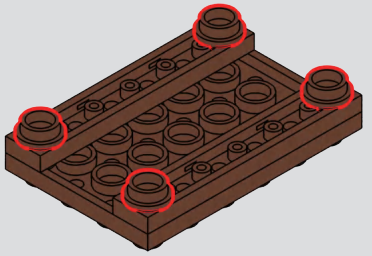

3

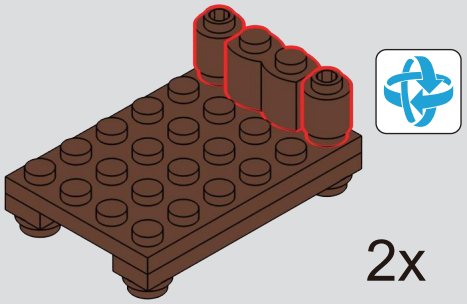

2x

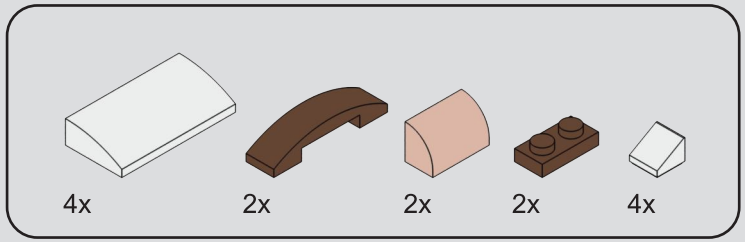

165

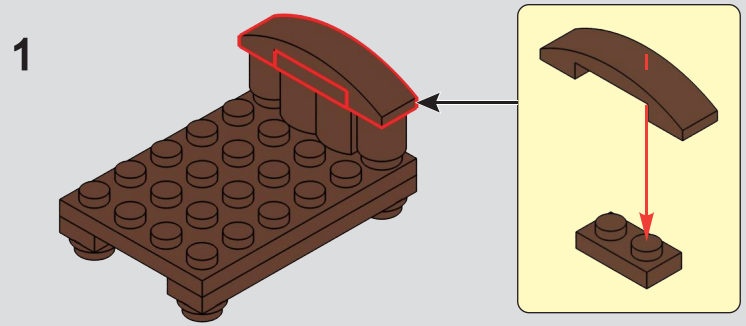

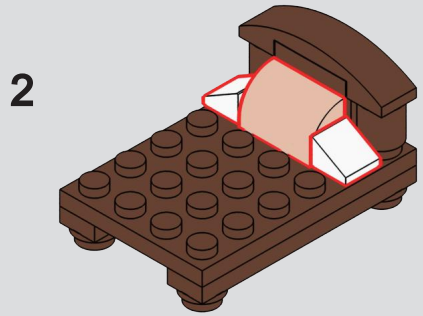

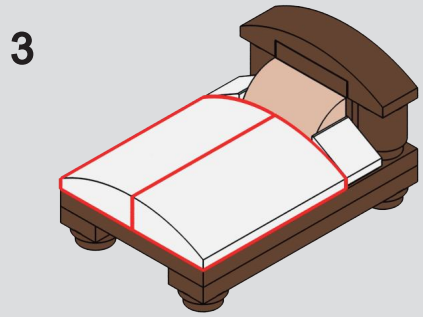

2x

166



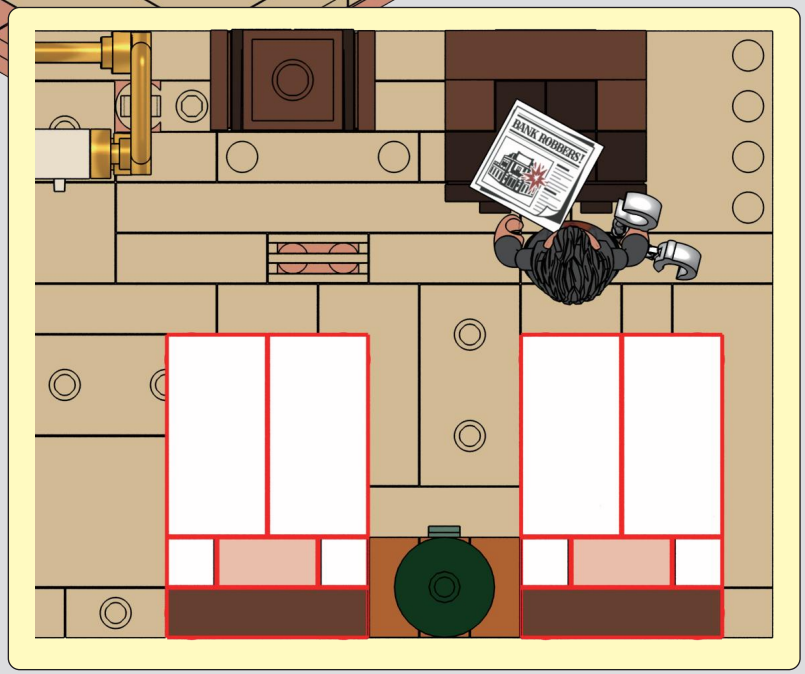

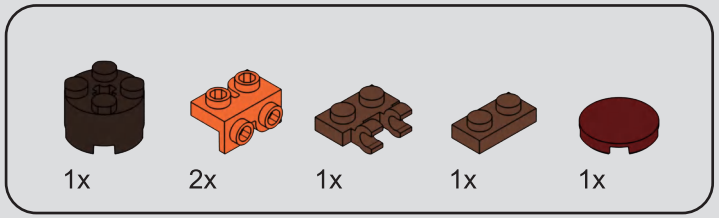

167

1

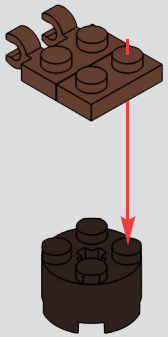

2

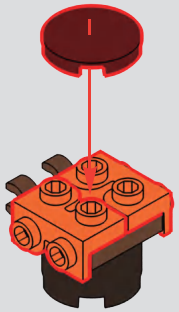

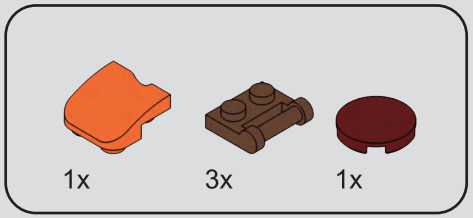

168

1

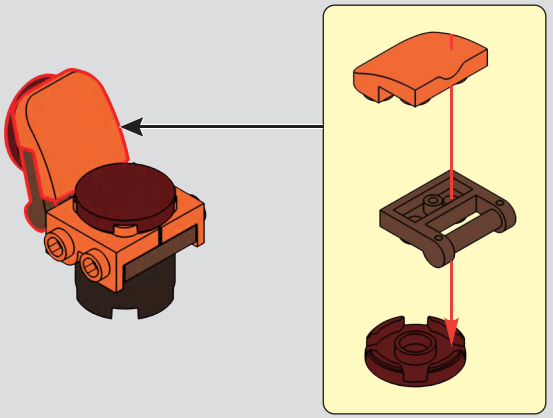

2

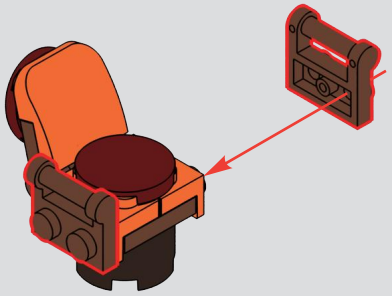

169

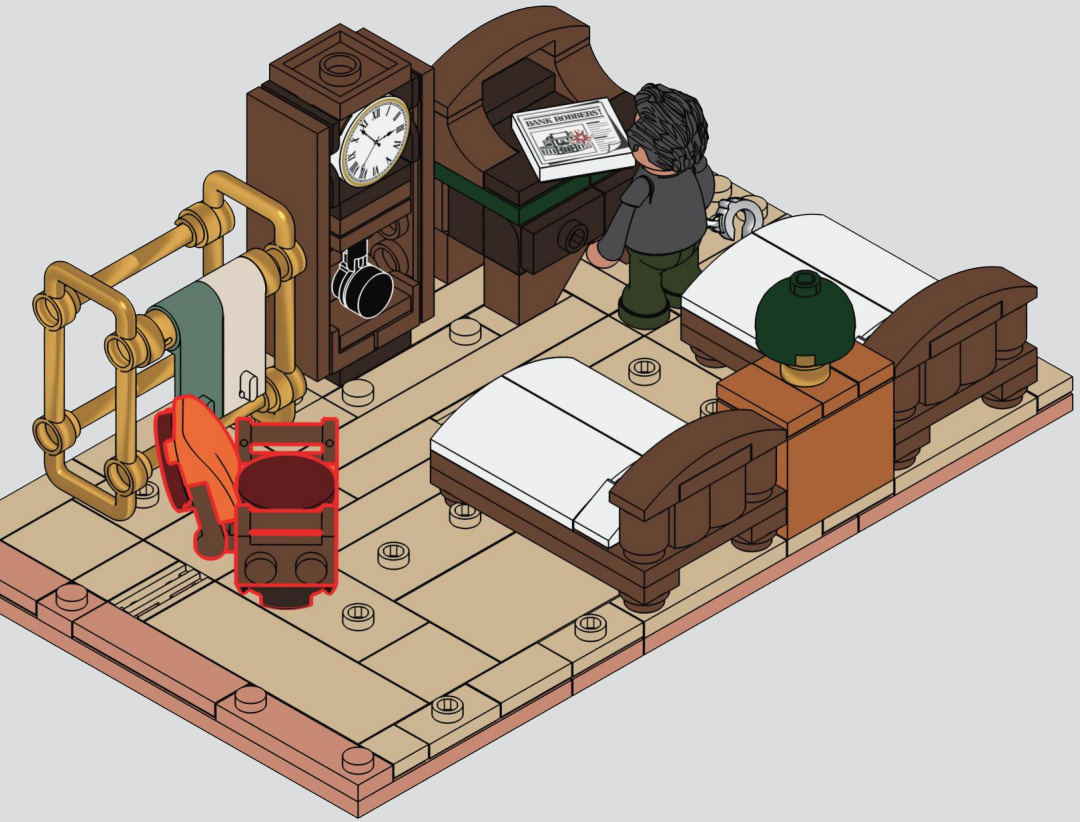

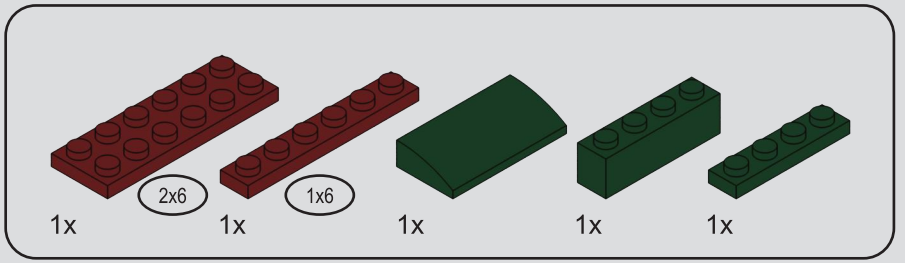

170

1

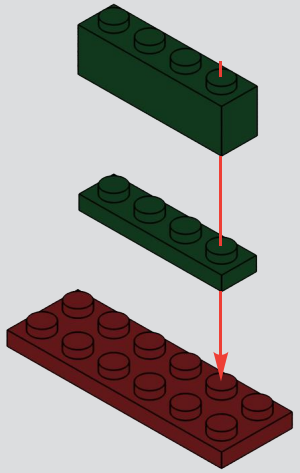

2

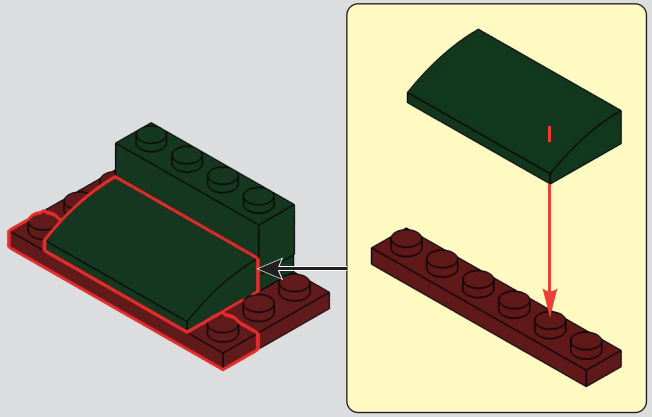

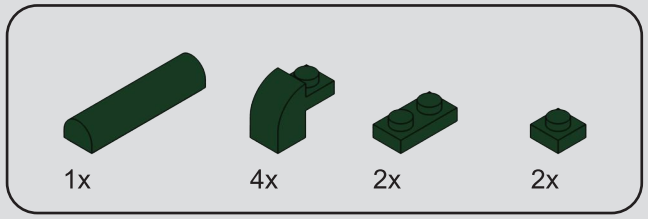

171

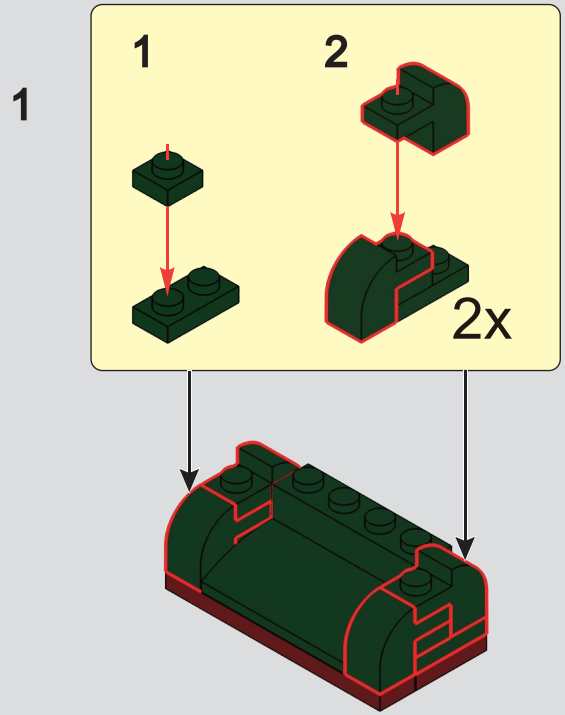

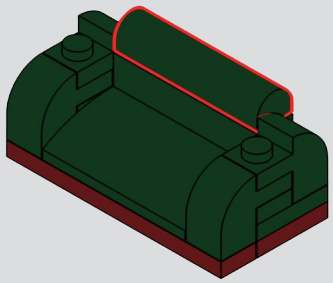

172

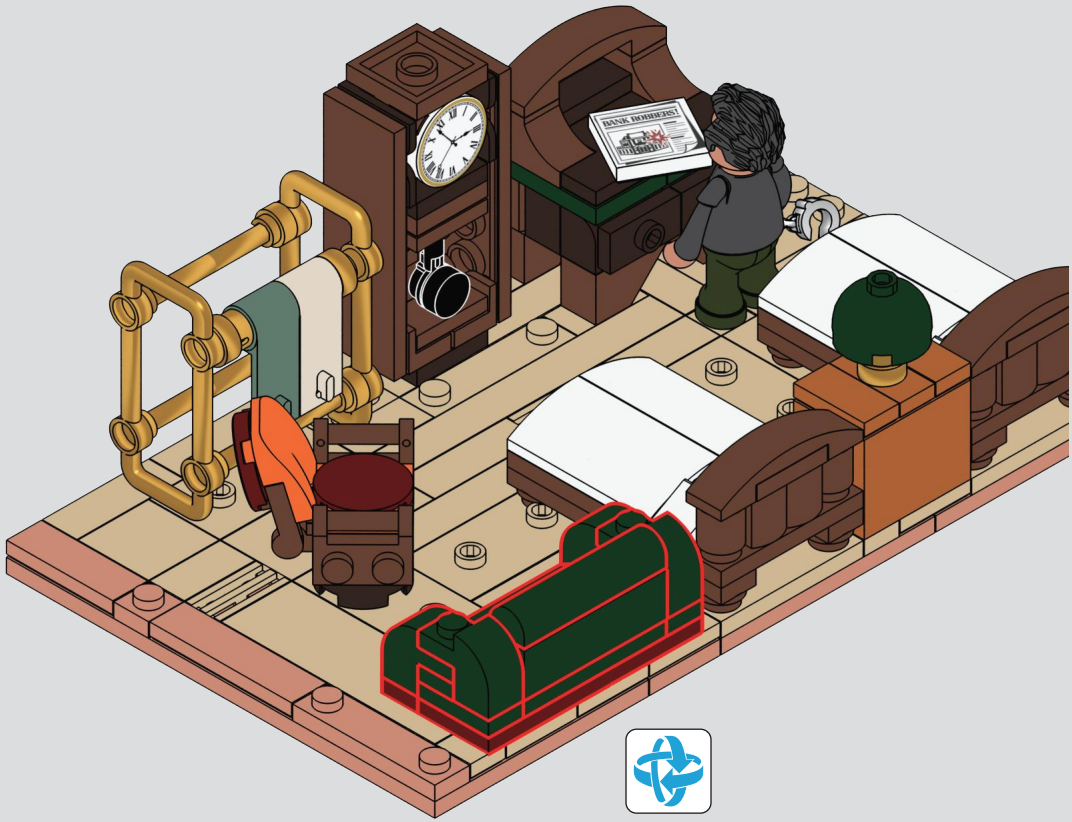

173

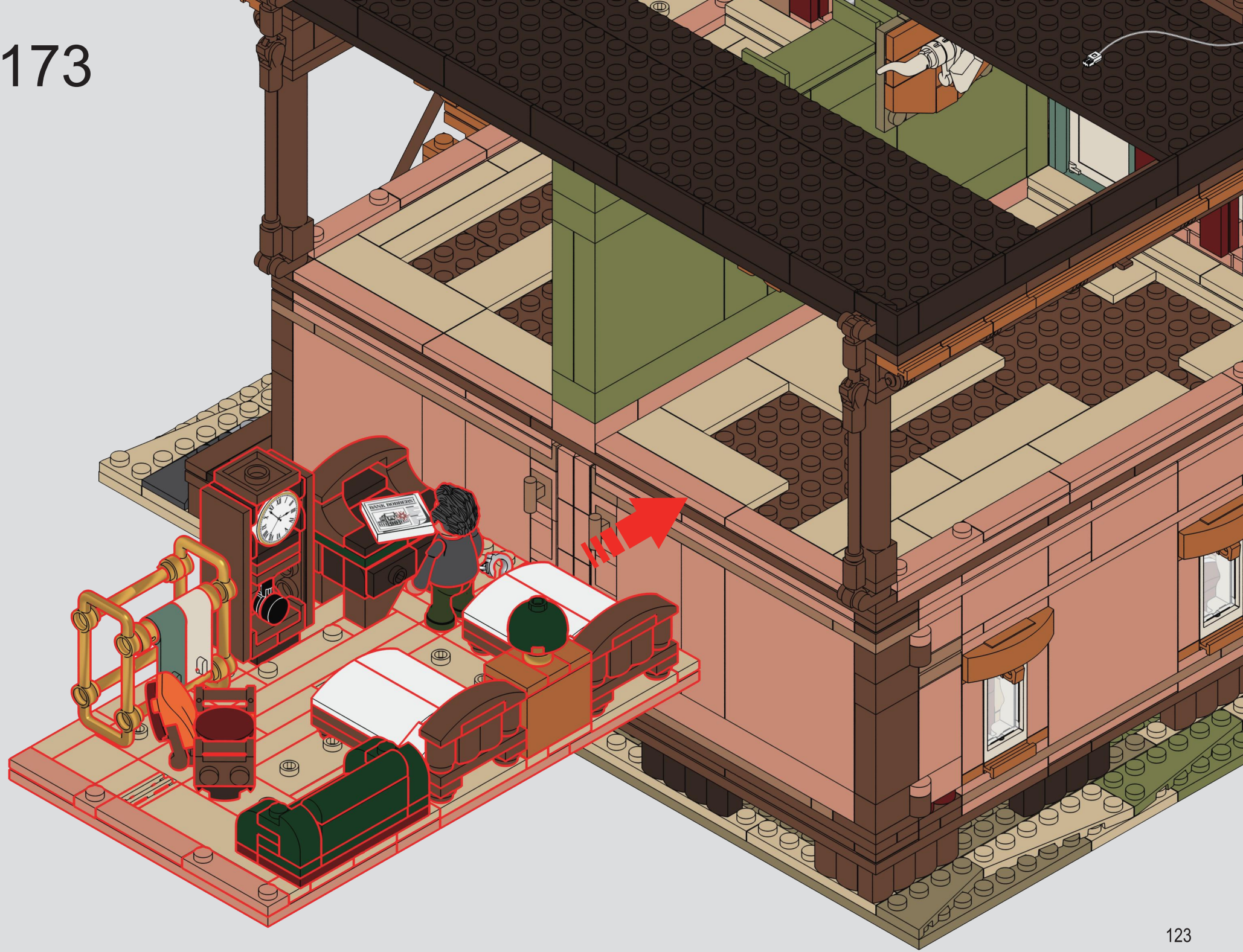


11


F


S



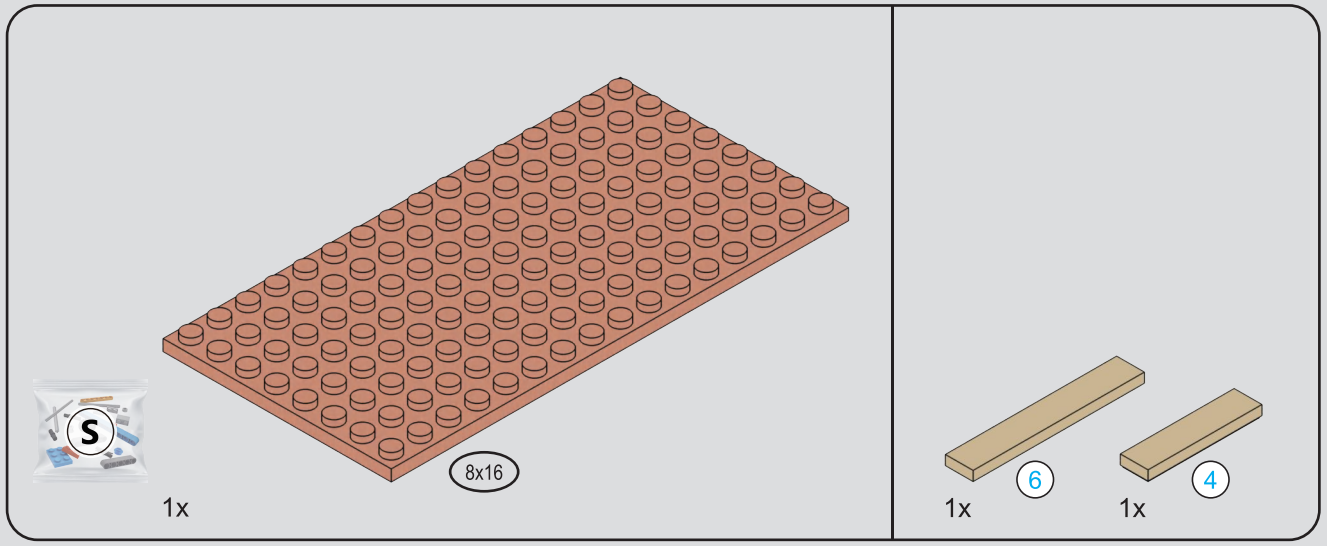

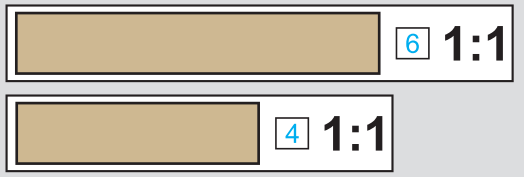

174

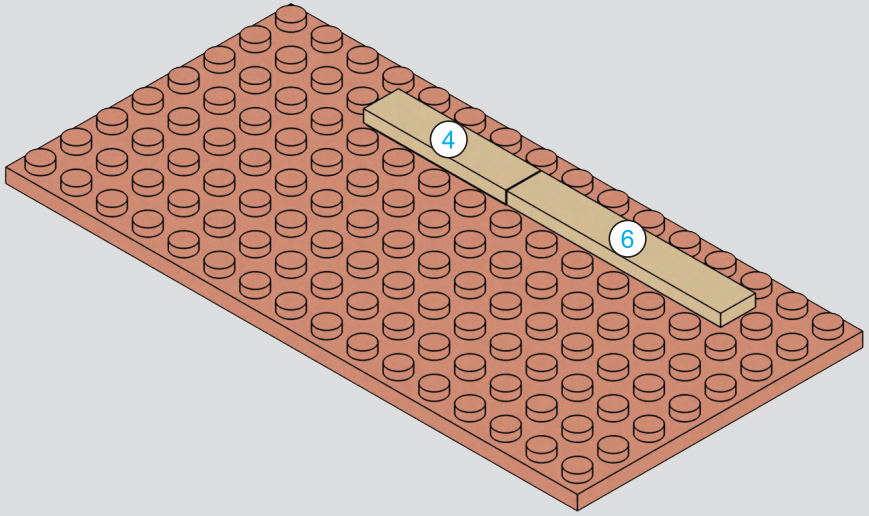

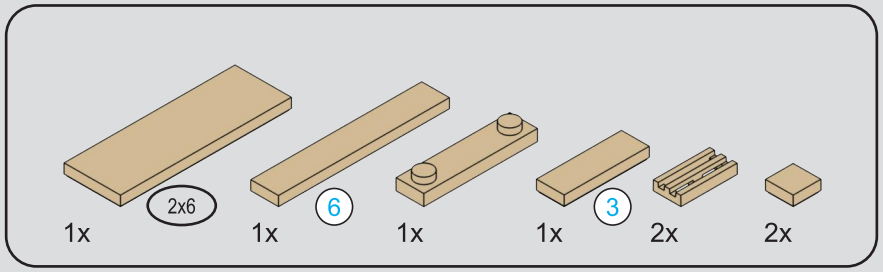



175

1

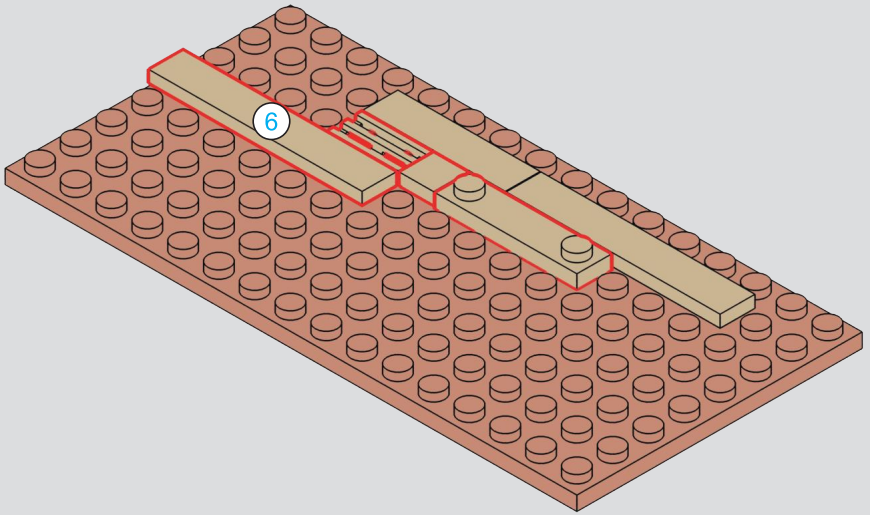

2

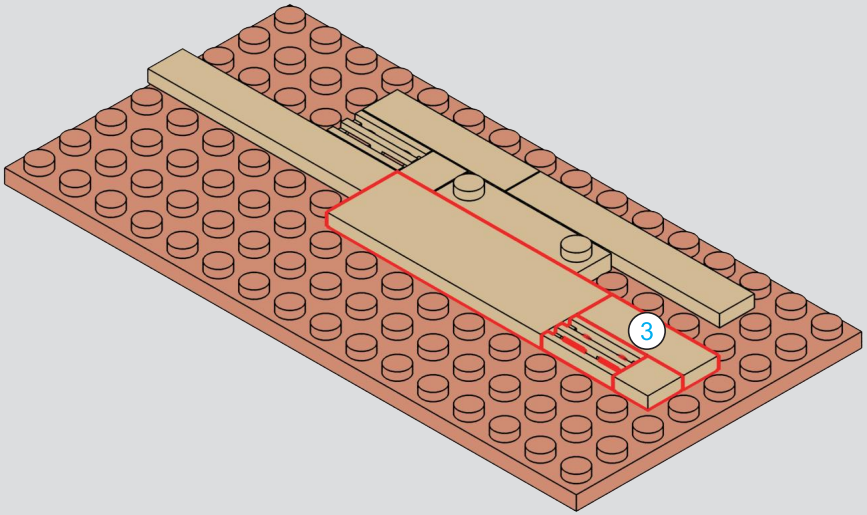

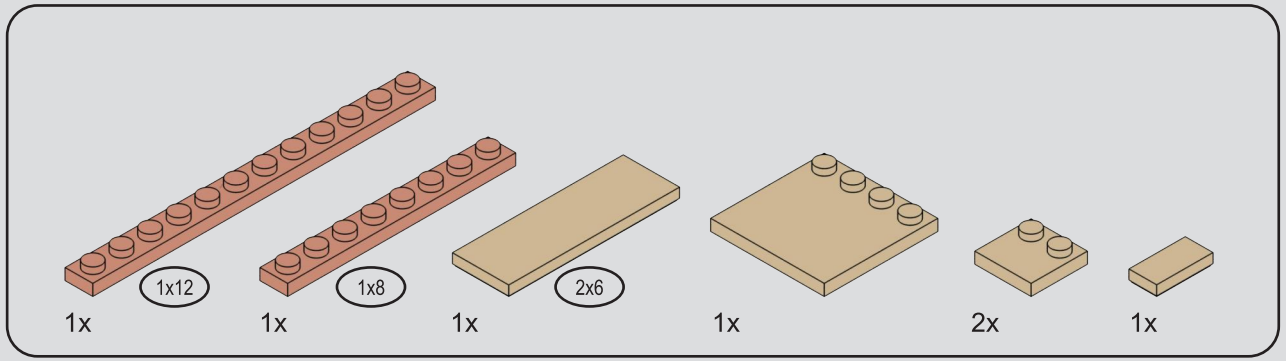

176

1

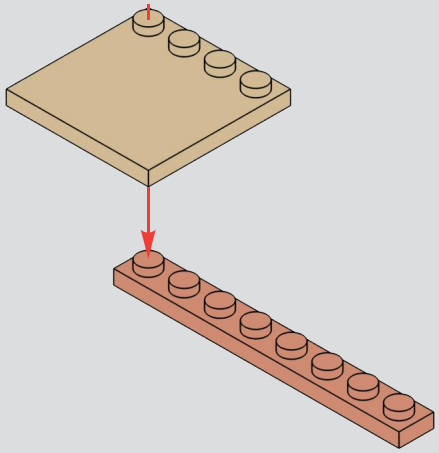

2

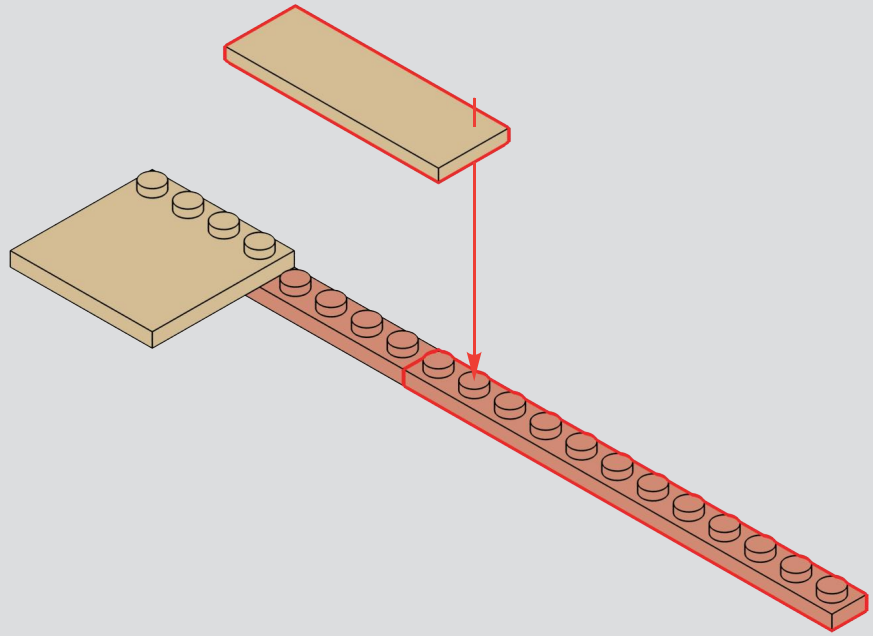

3

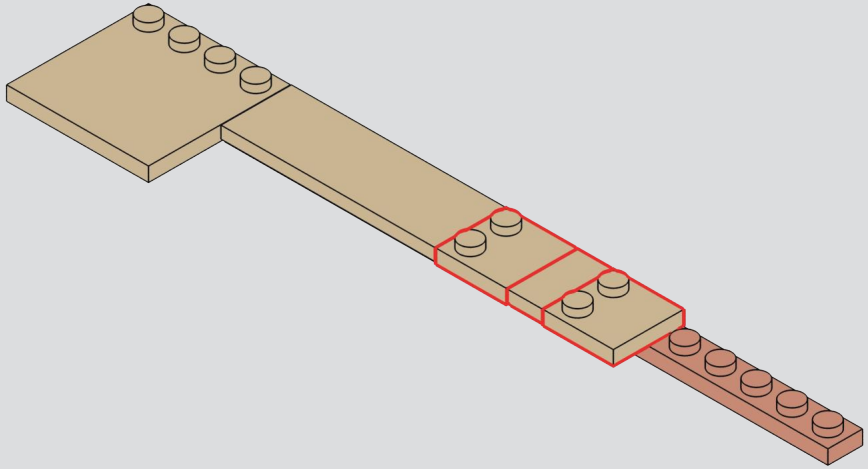

177

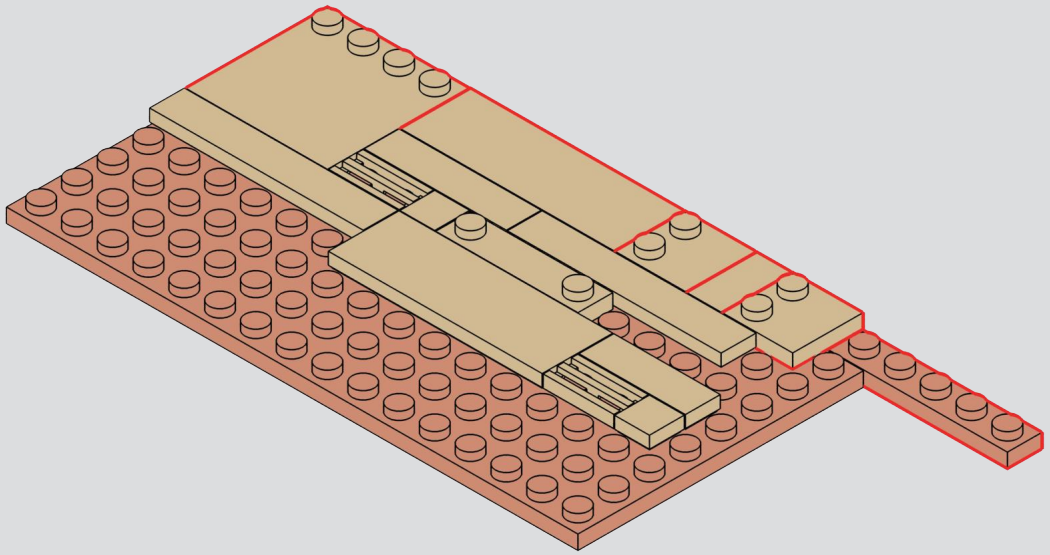

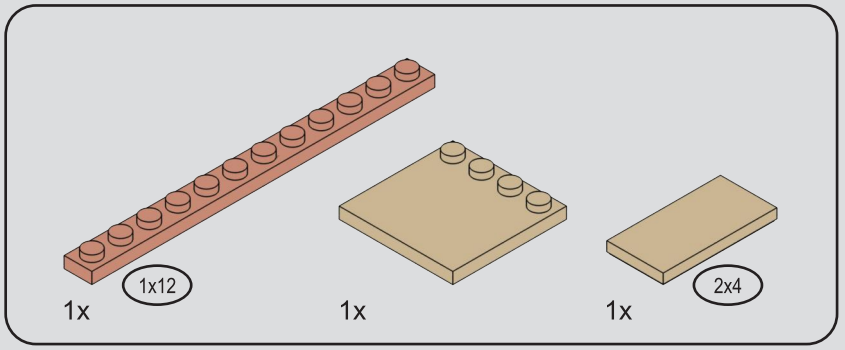

178

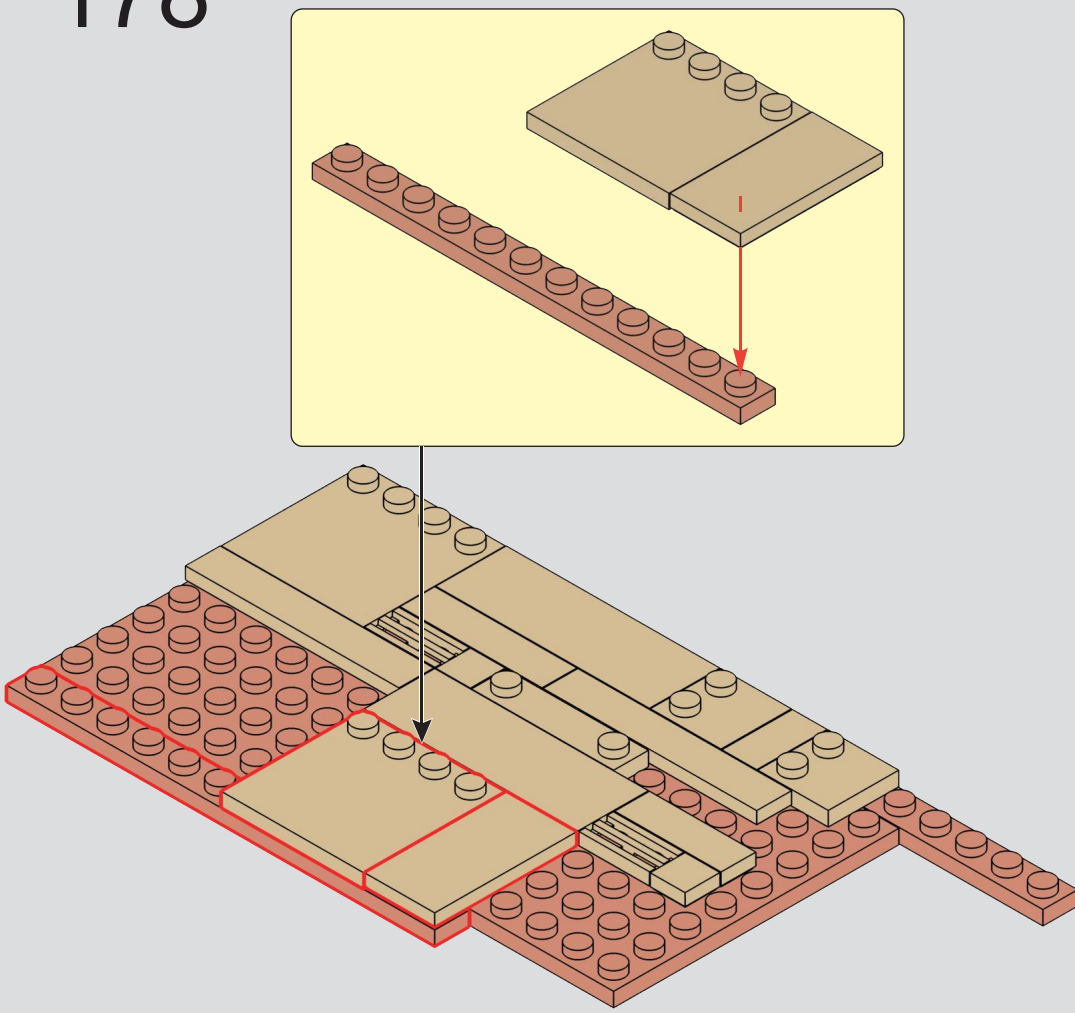

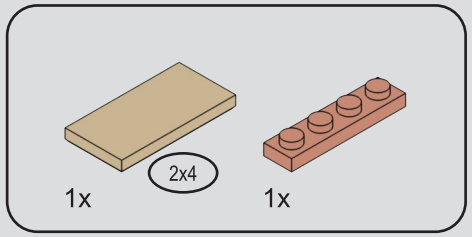

179

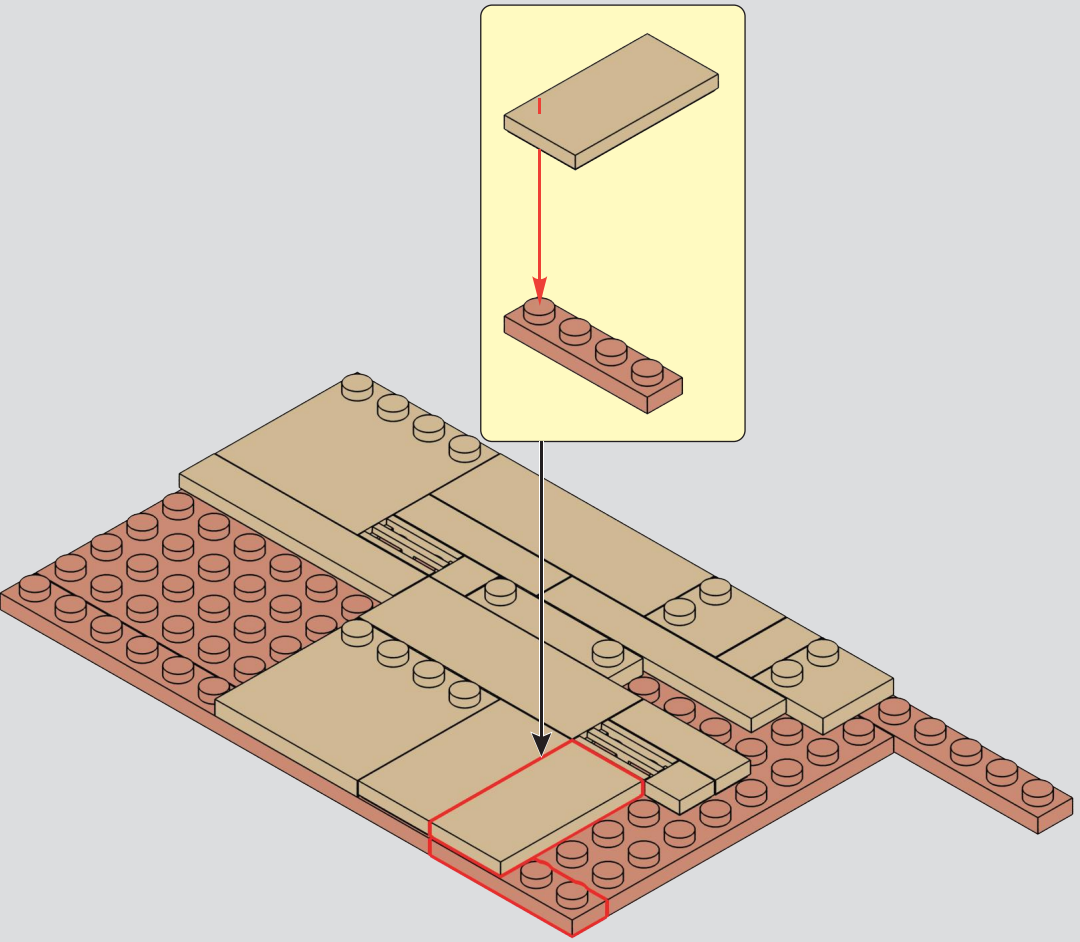

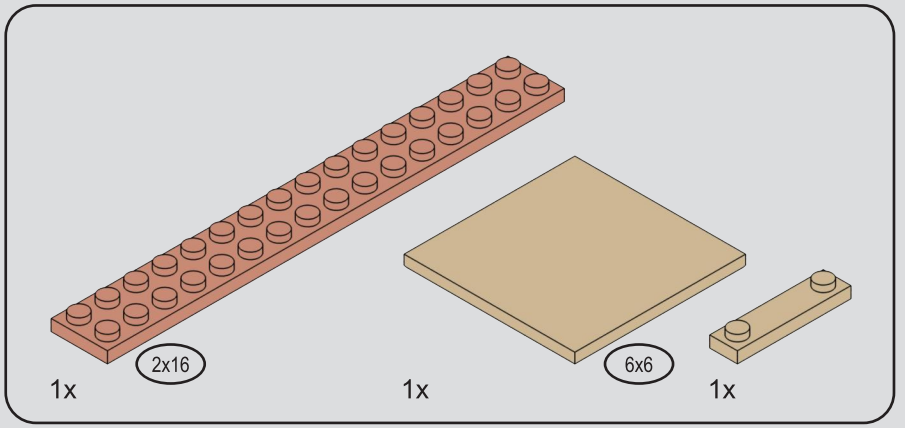

180

1

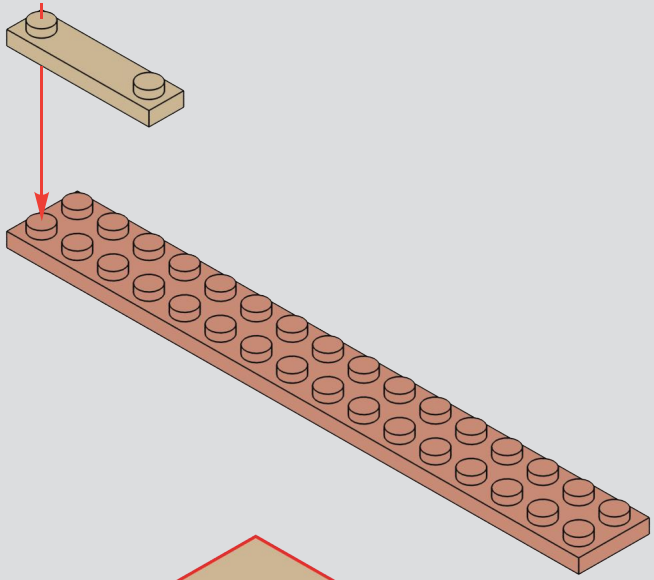

2

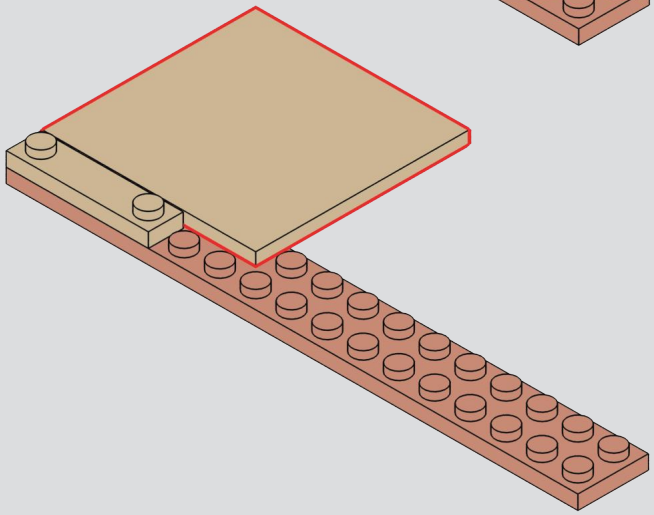

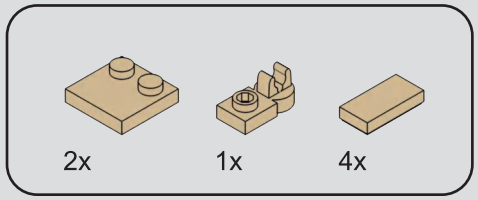

181

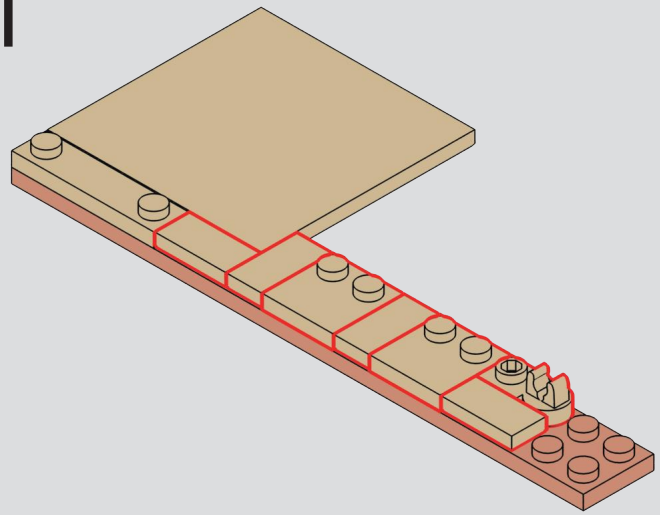

182

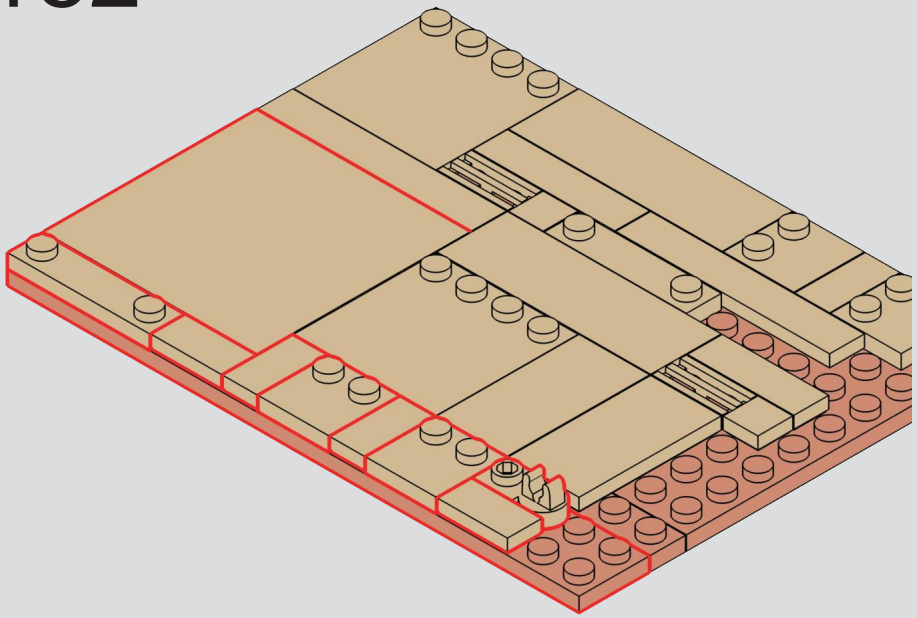

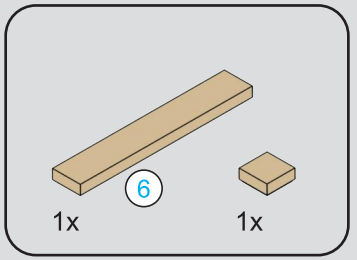



183

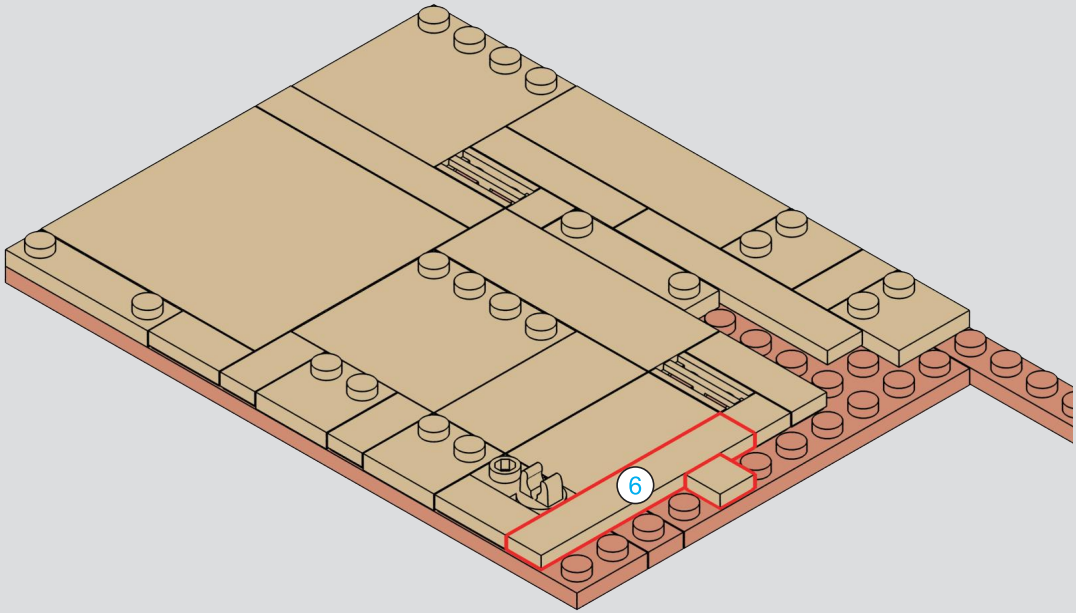

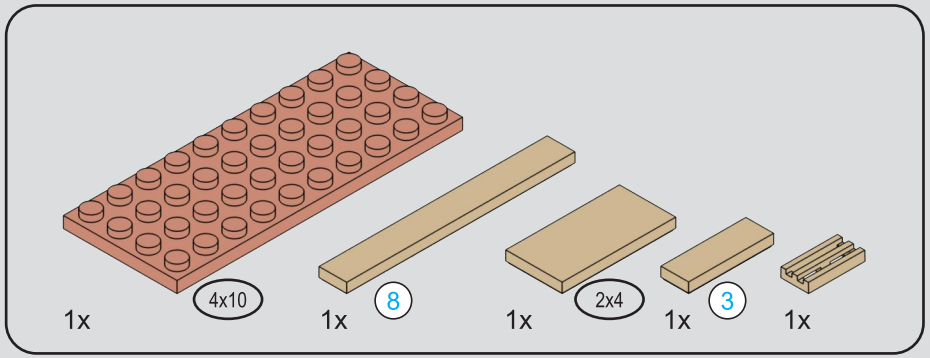

184

1

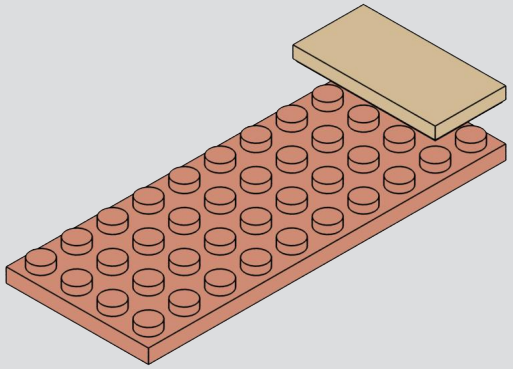

2

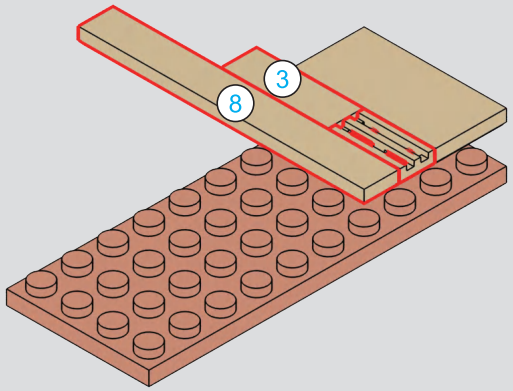



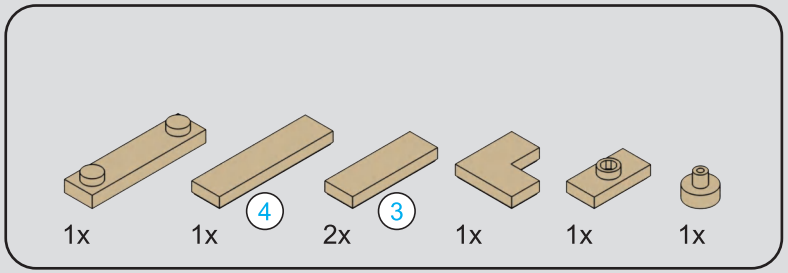

185

1

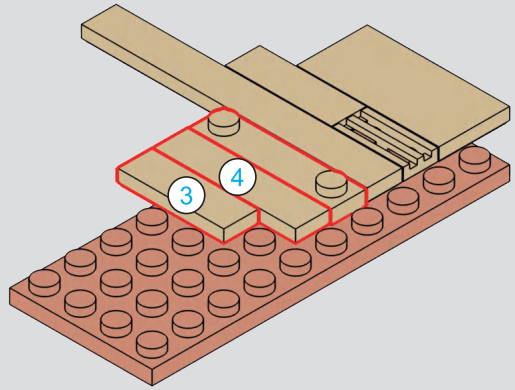

2

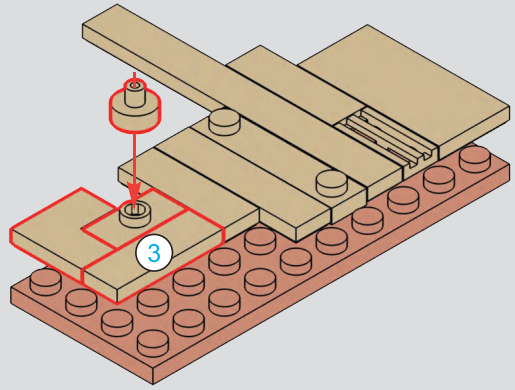



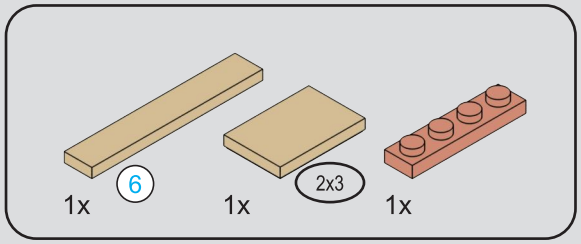

186

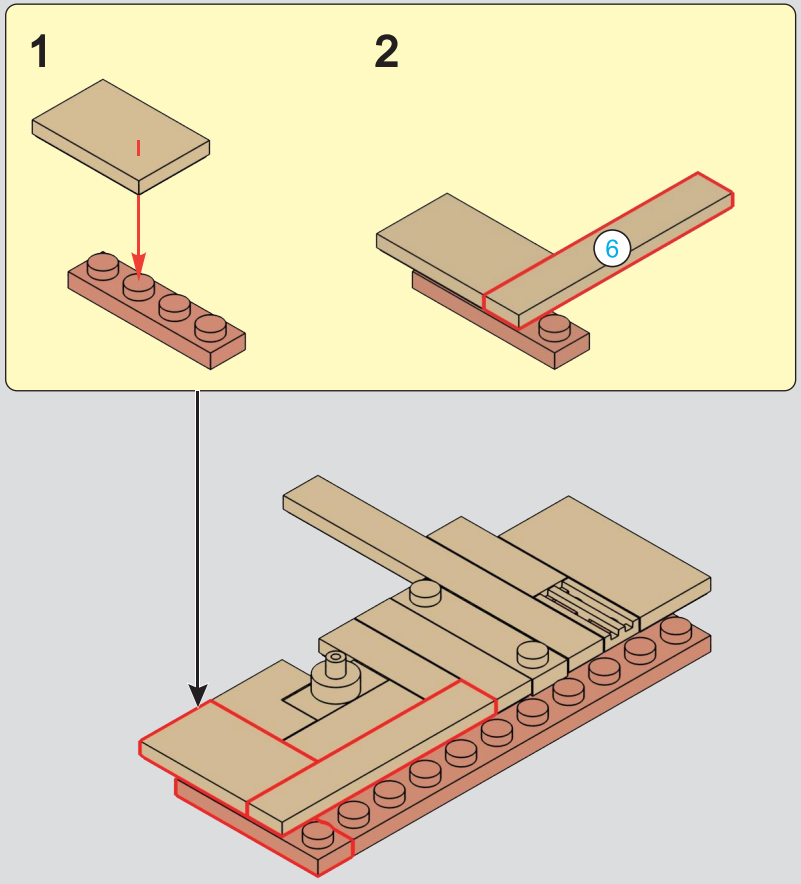



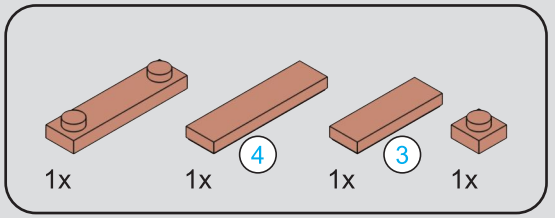

187

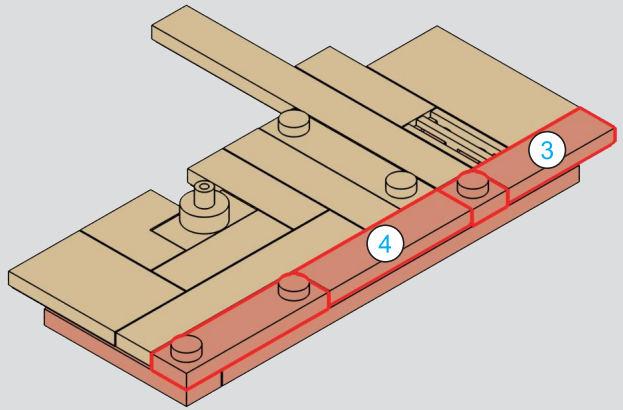



188

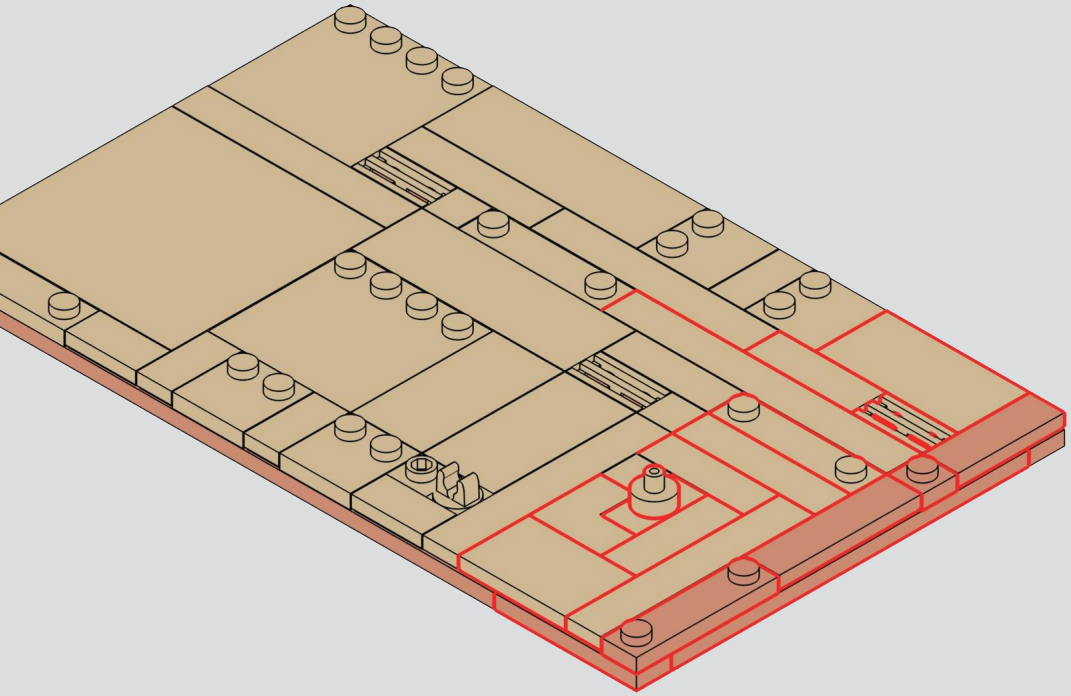

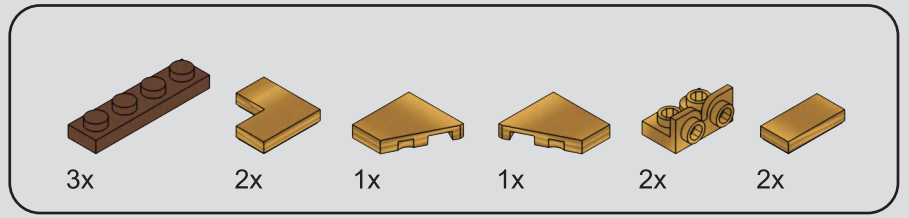

189

1

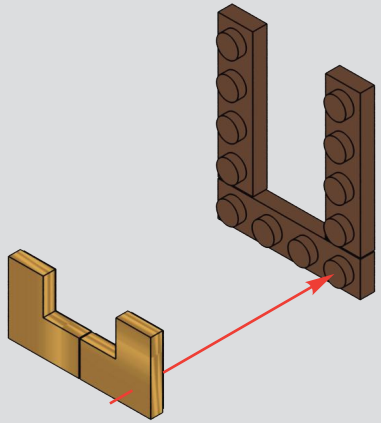

2

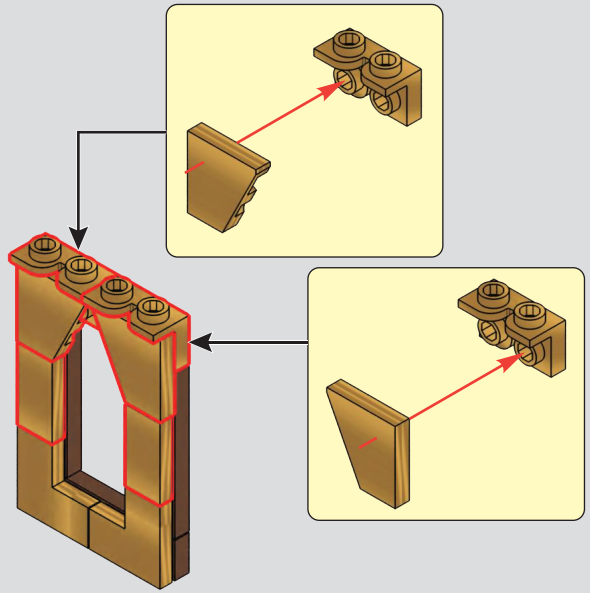

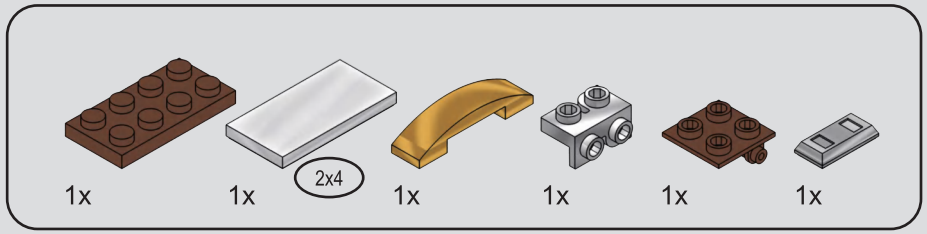

190

1

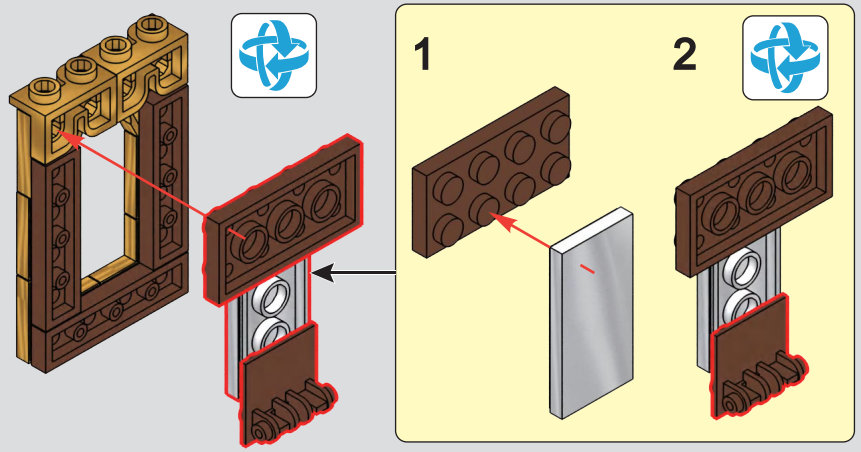

2

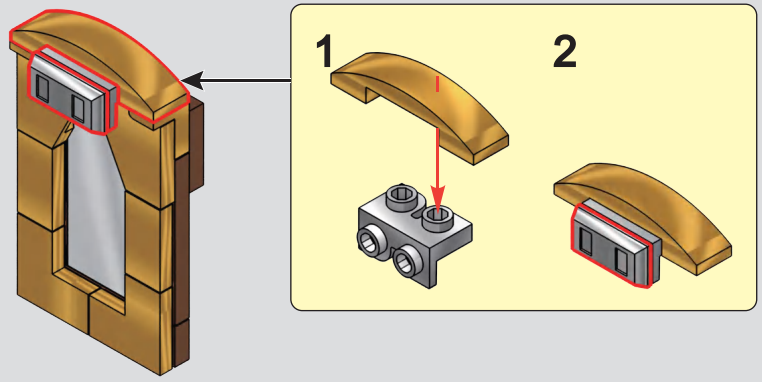

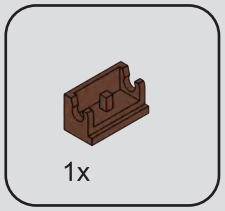

191

1

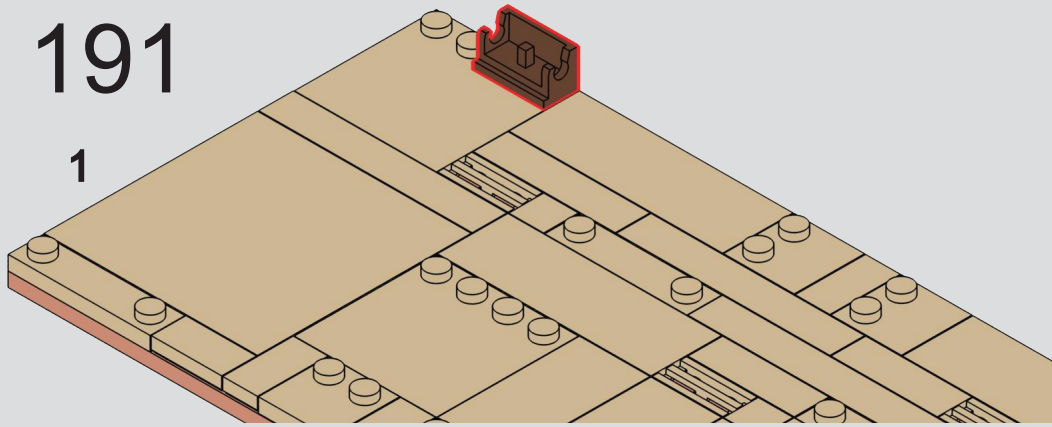

2

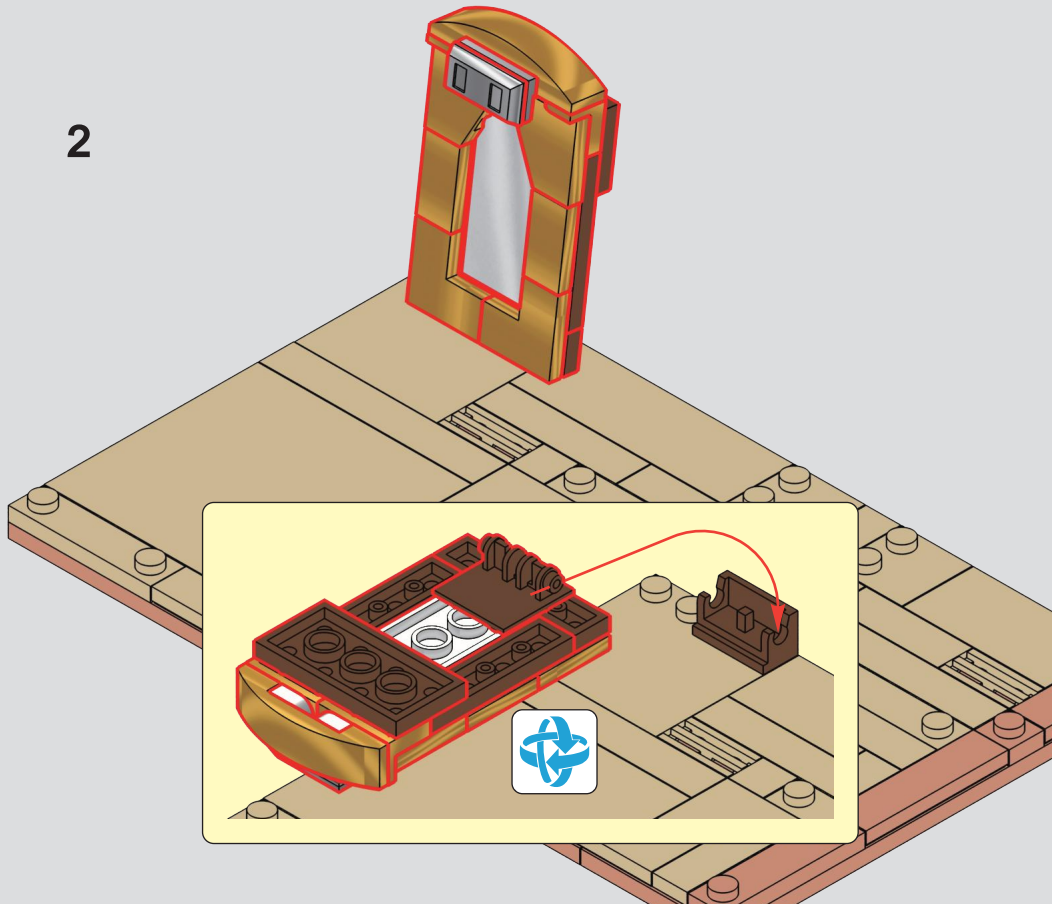

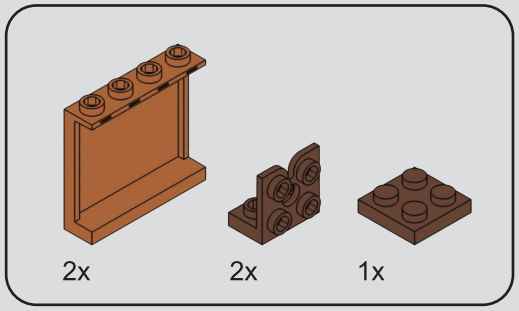

192

1

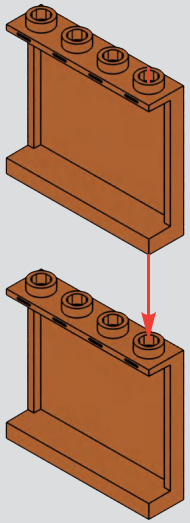

2

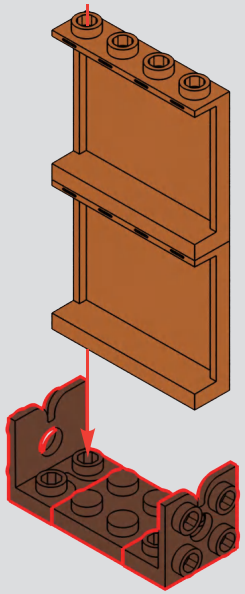

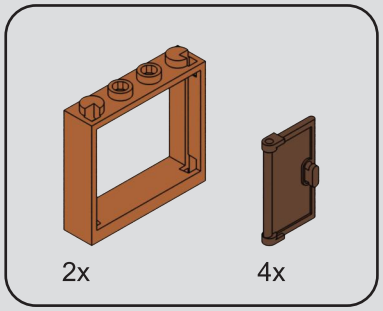

193

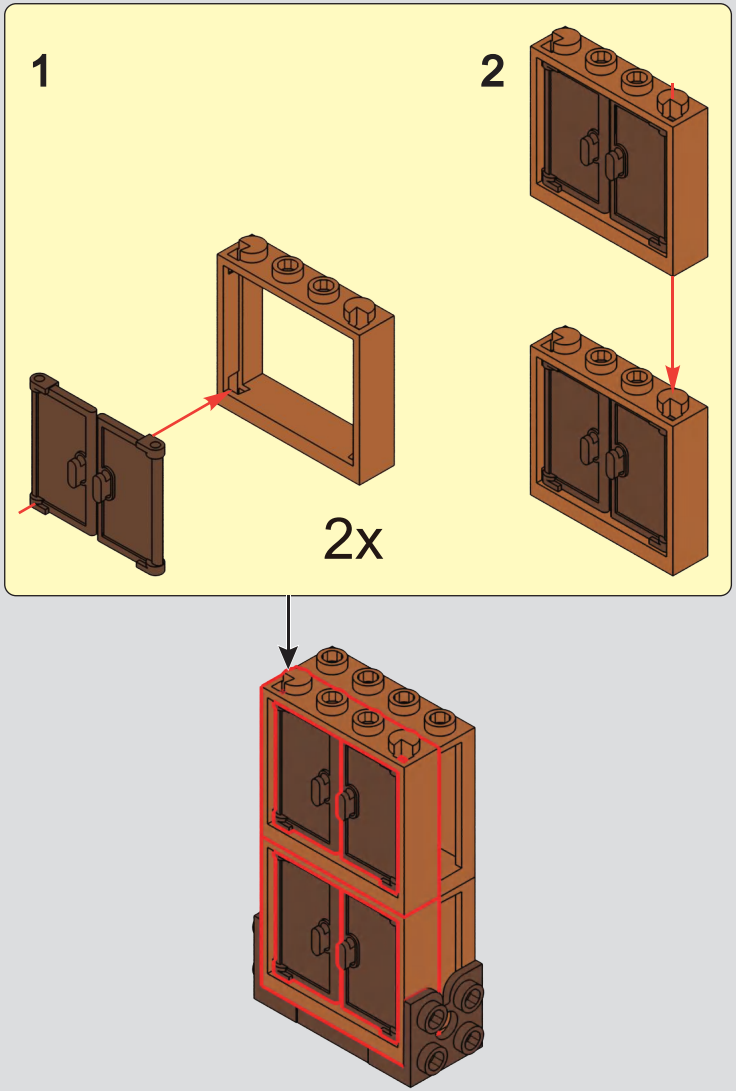

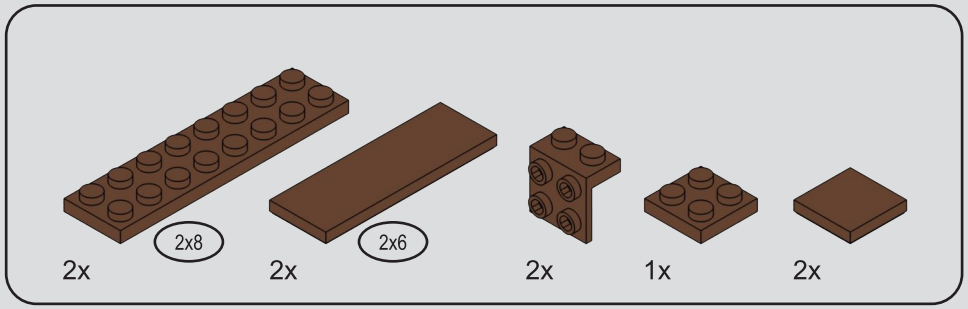

194

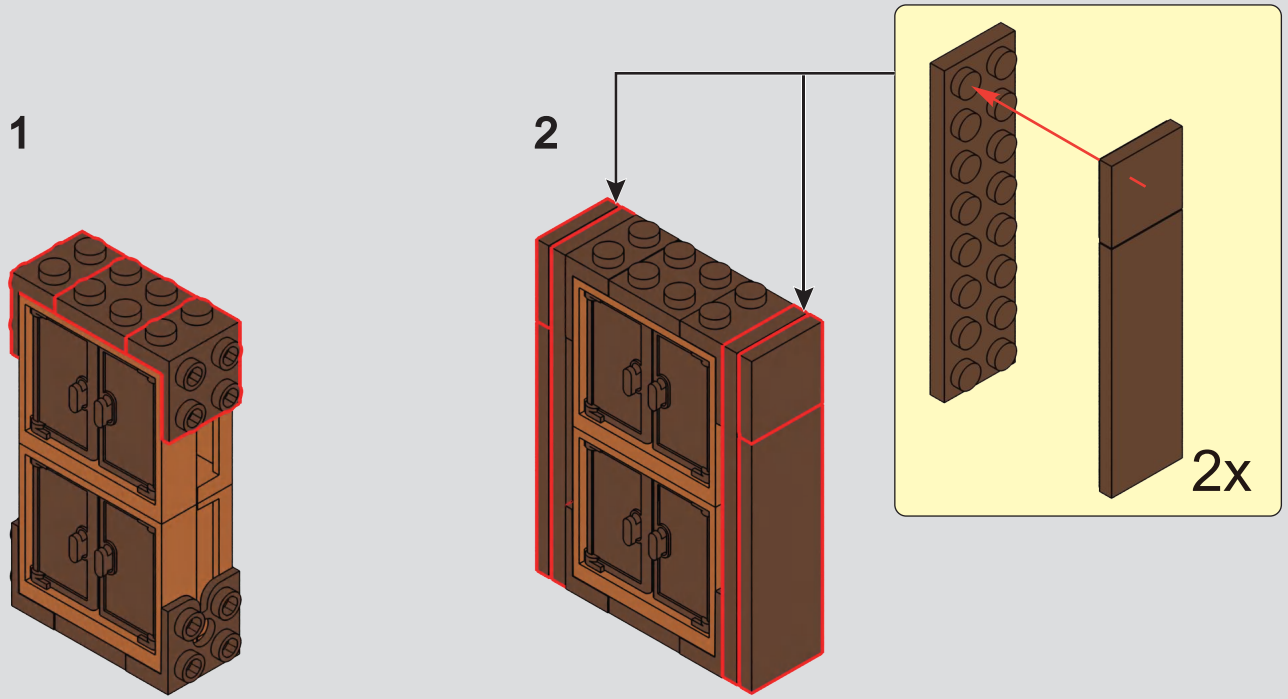

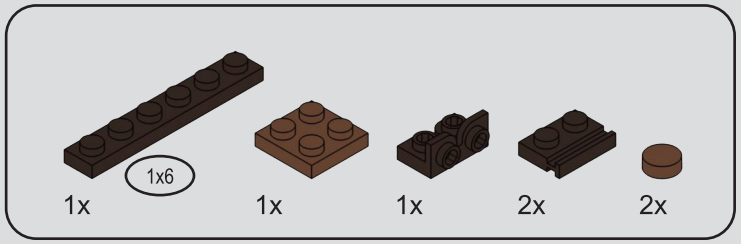

195

1

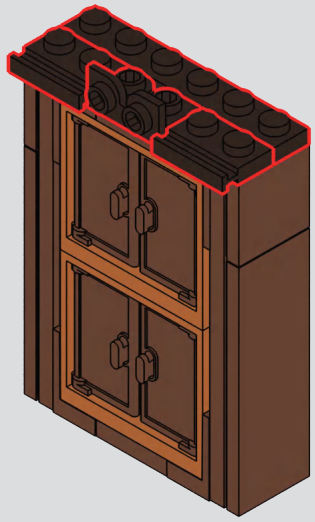

2

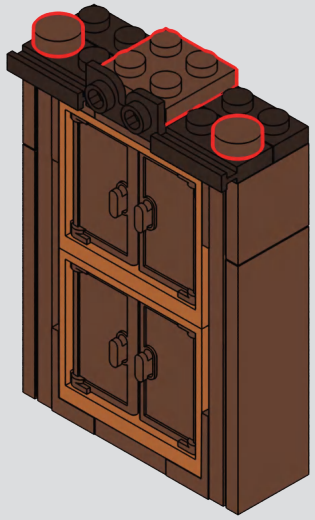

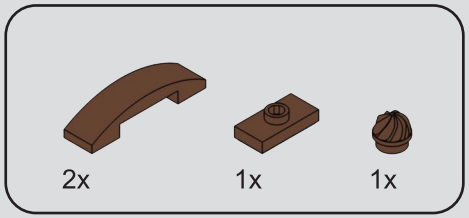

196

1

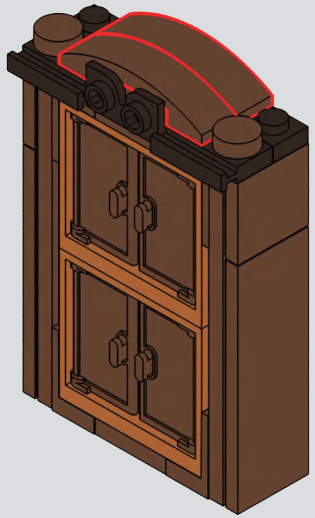

2

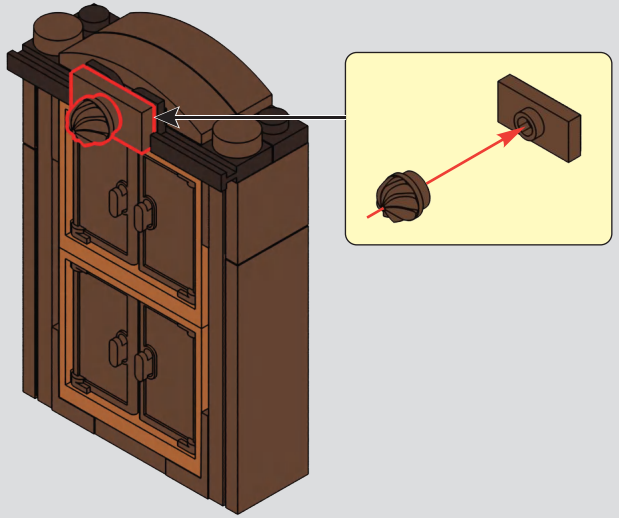

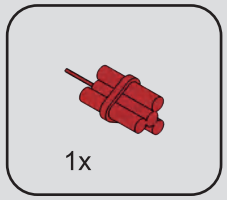

197

1

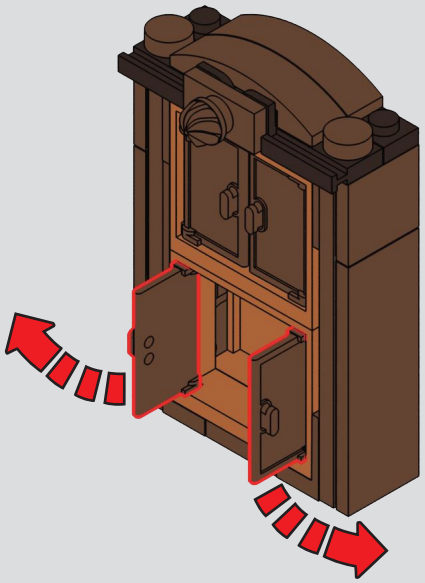

2

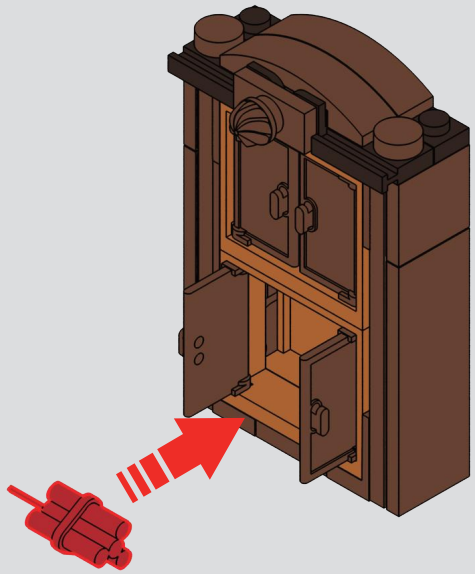

3

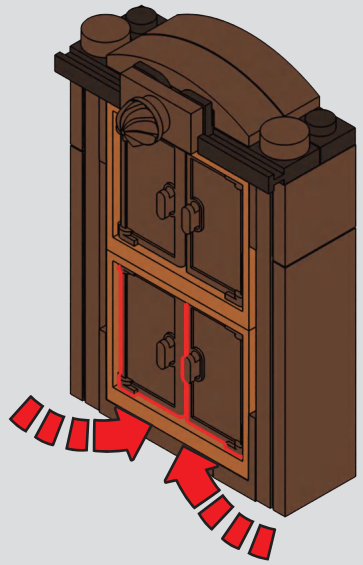

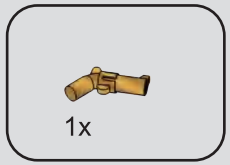

198

1

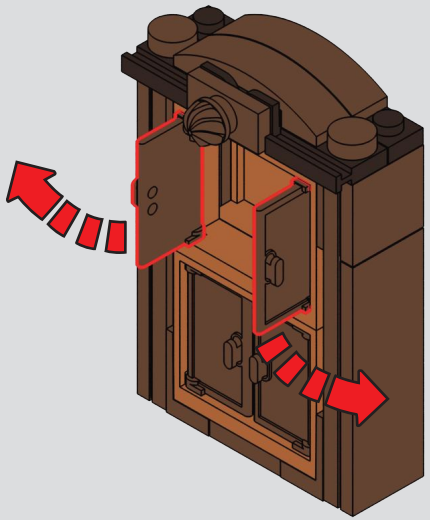

2

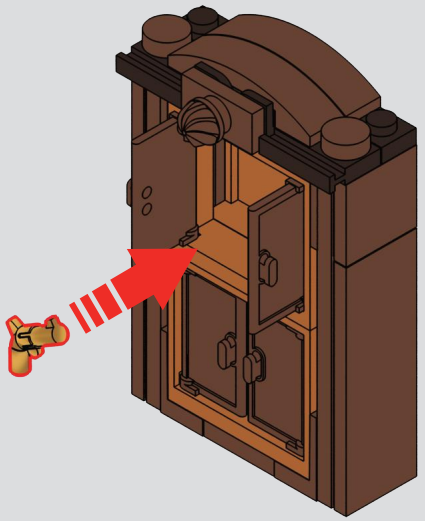

3

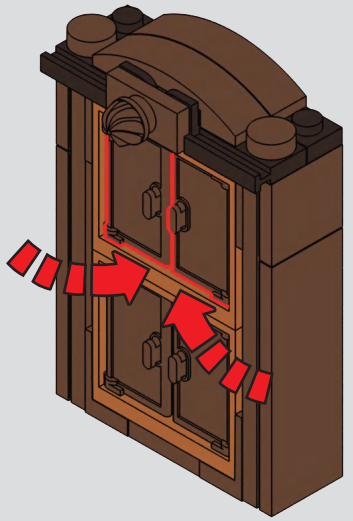

199

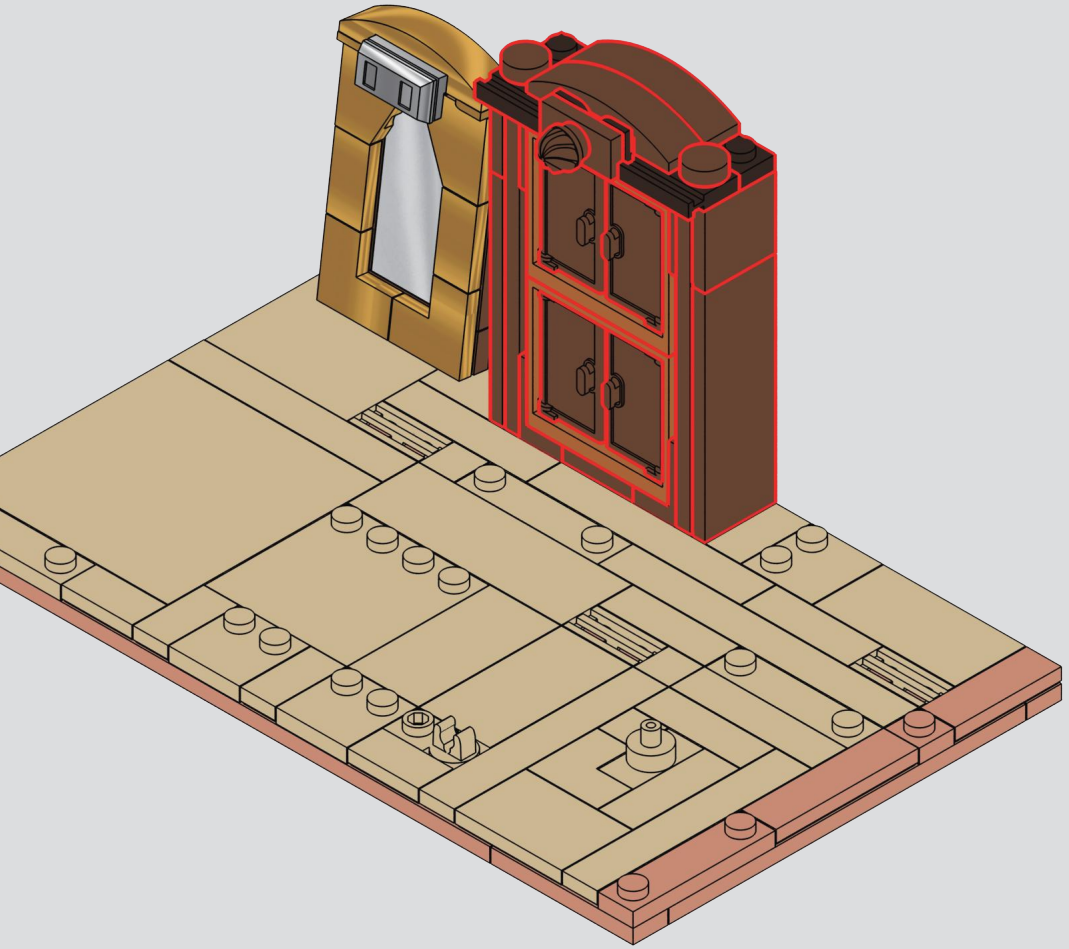

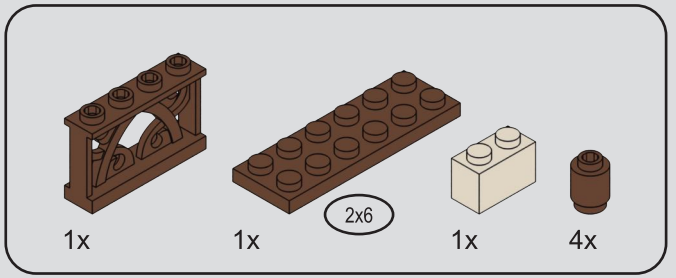

200

1

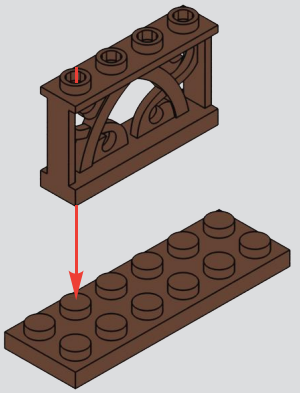

2

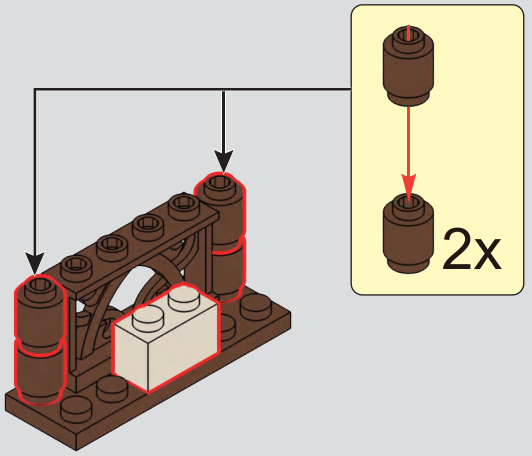

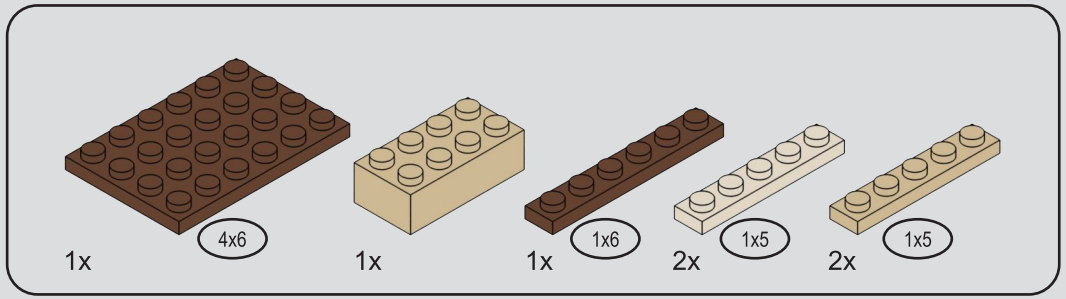

201

1

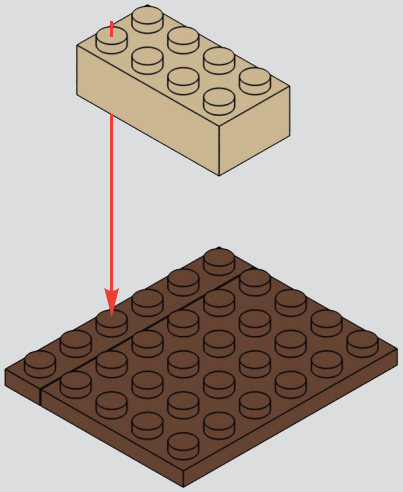

2

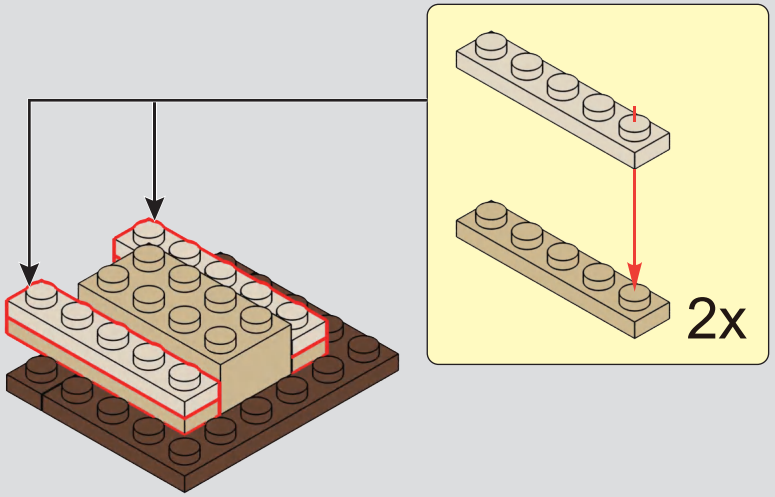

202

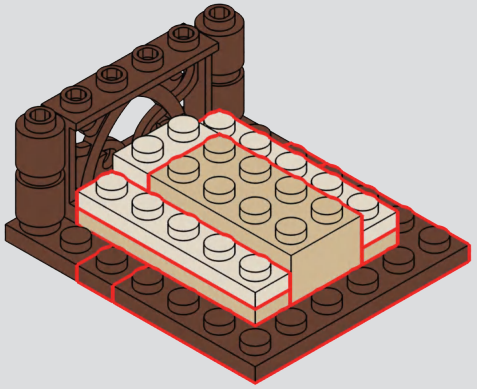

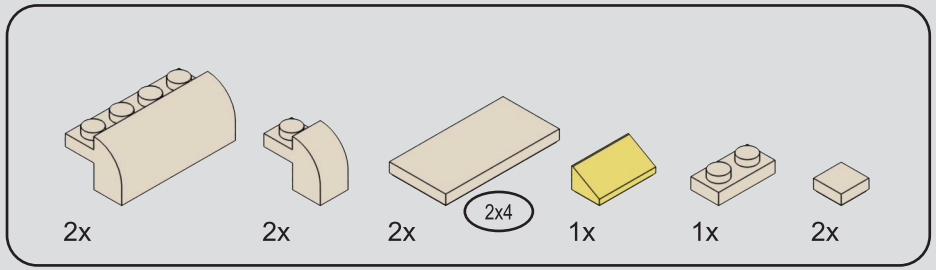

203

1

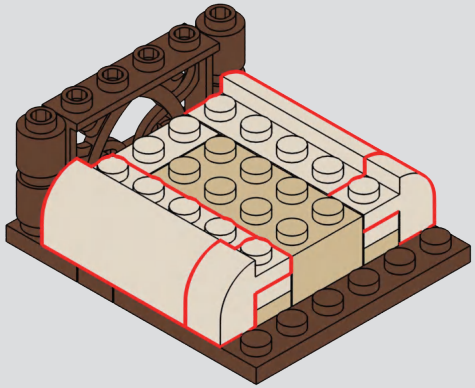

2

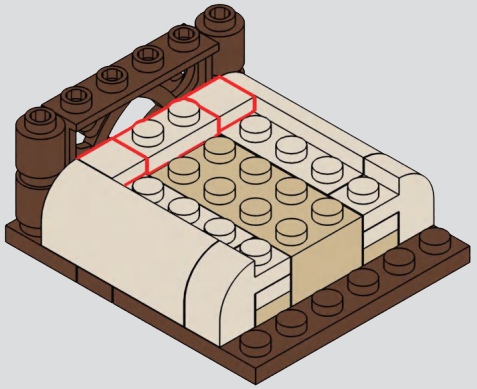

3

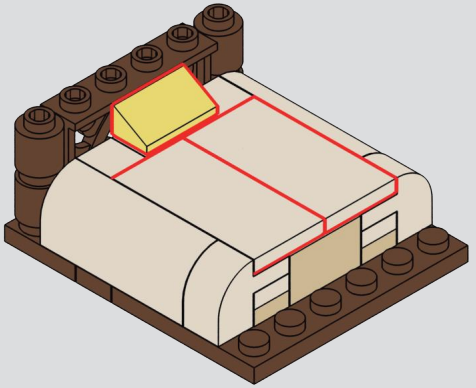

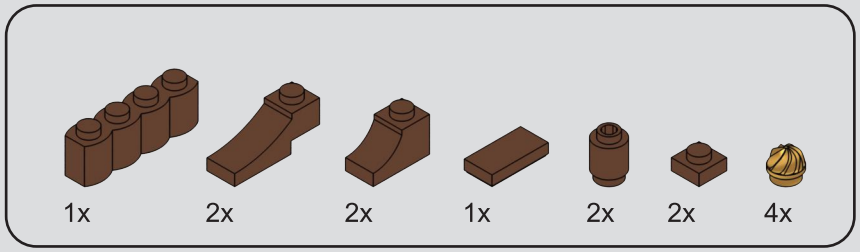

204

1

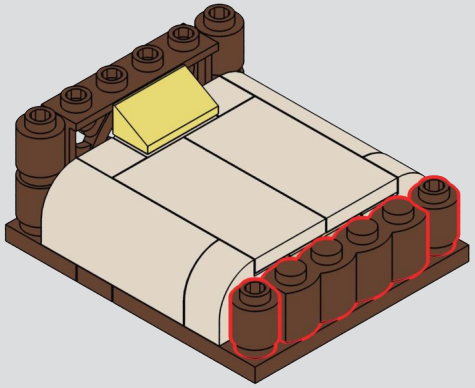

2

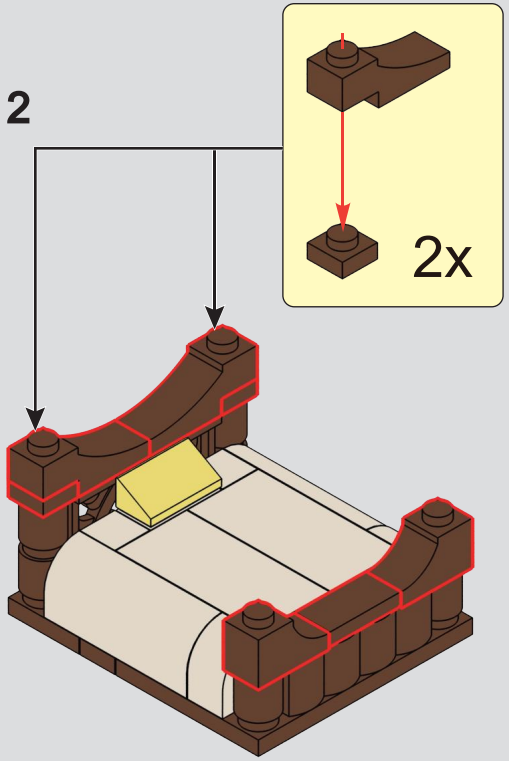

3

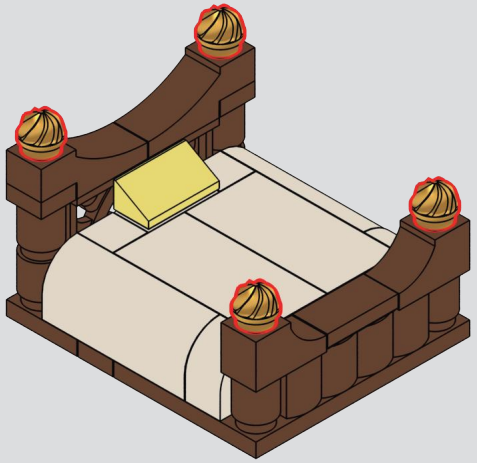

205

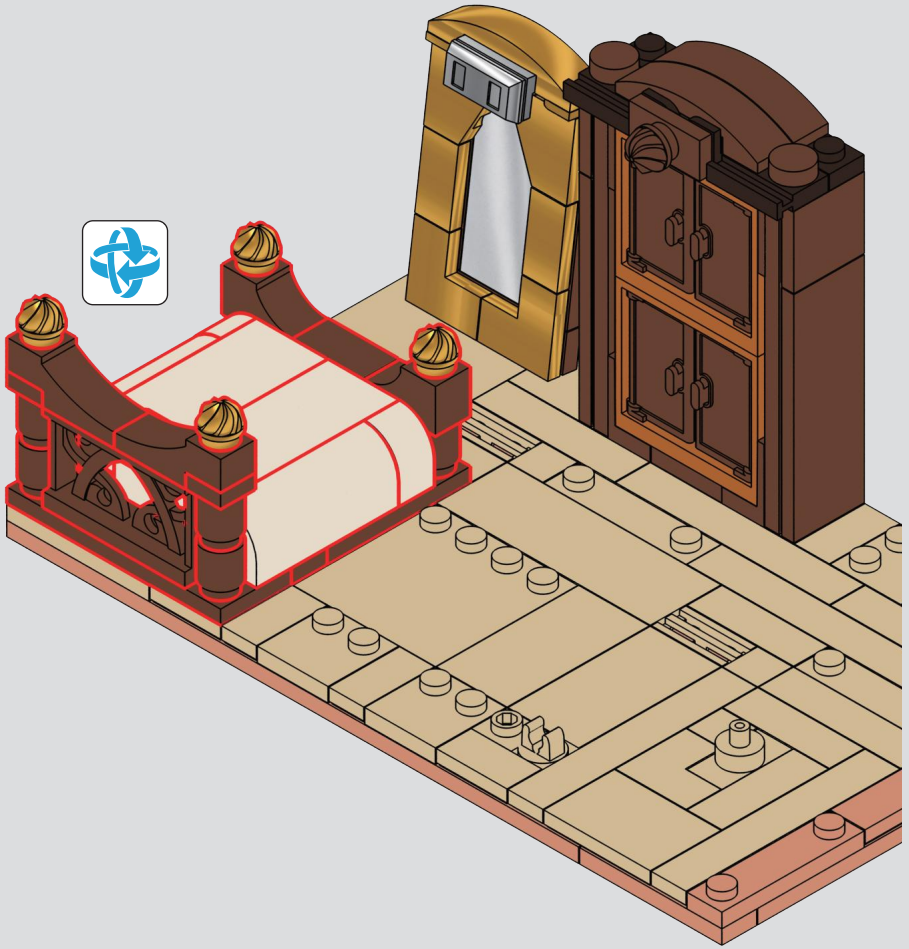

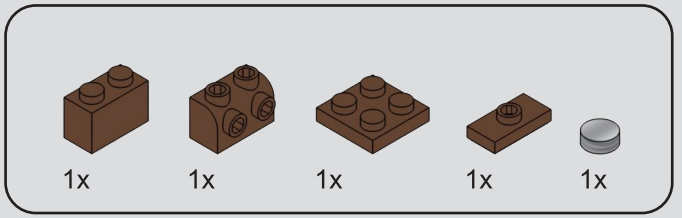

206

1

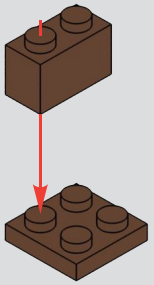

2

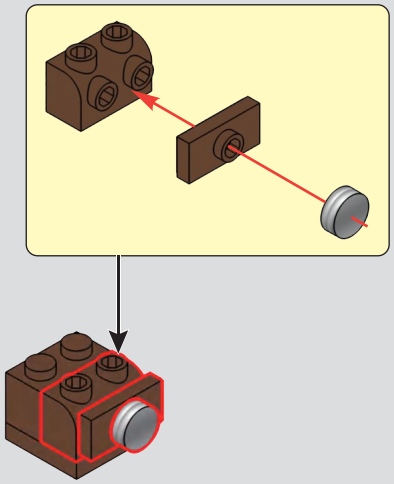

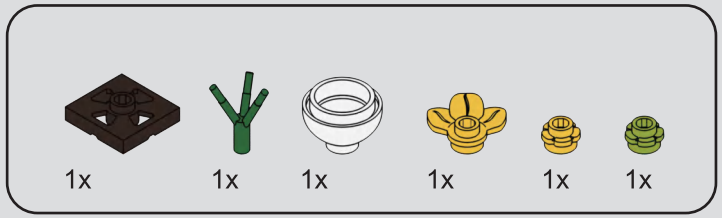

207

1

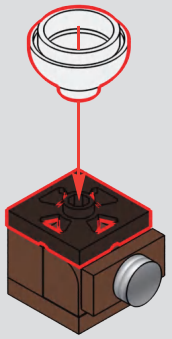

2

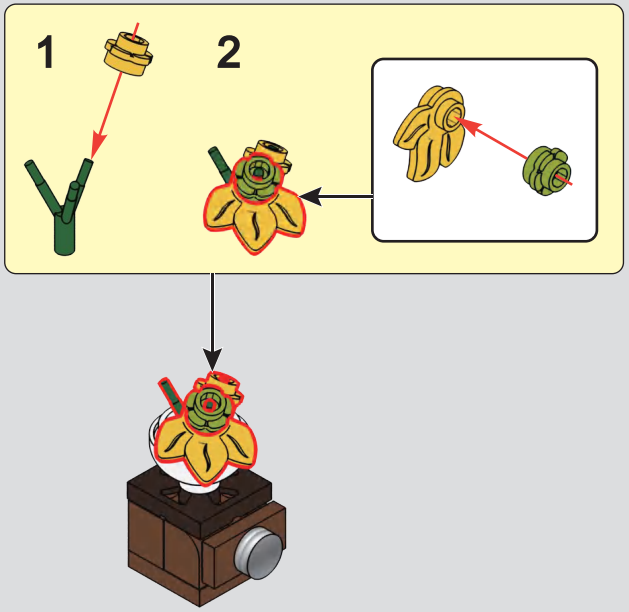

208

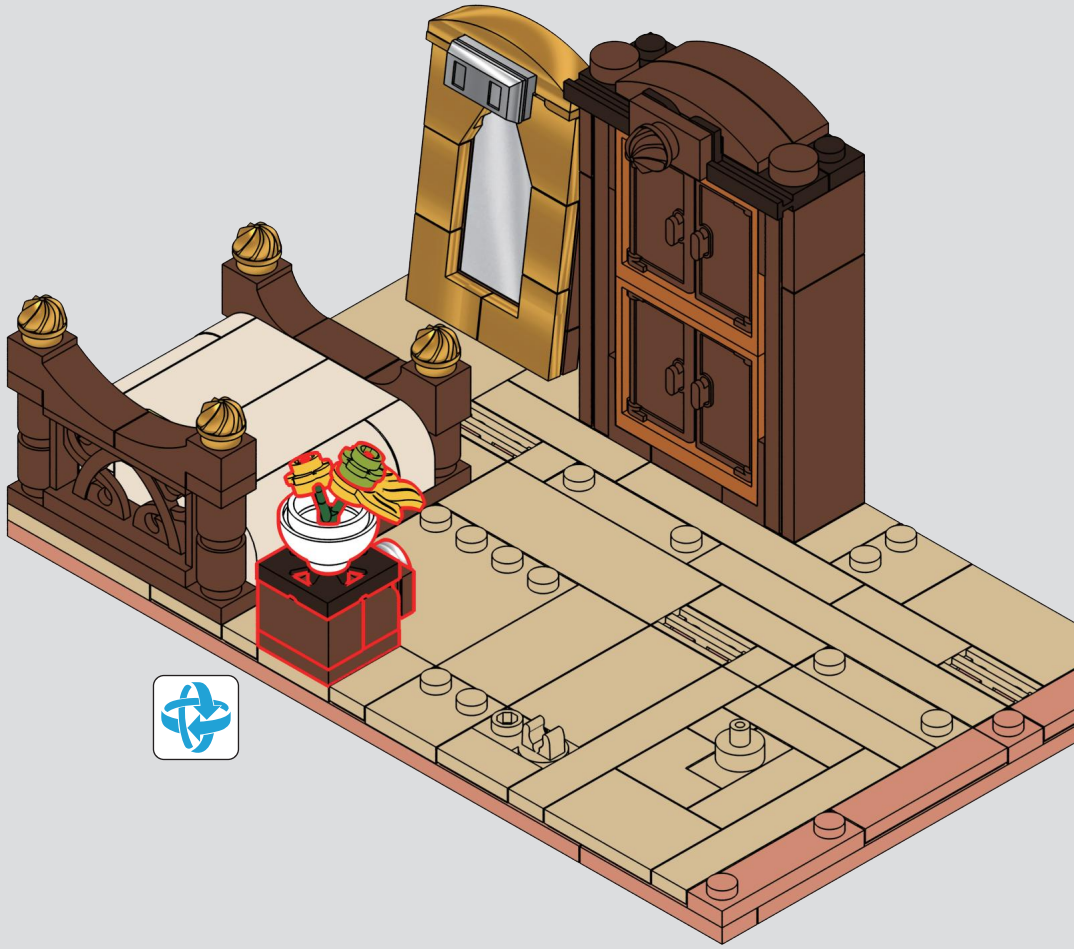

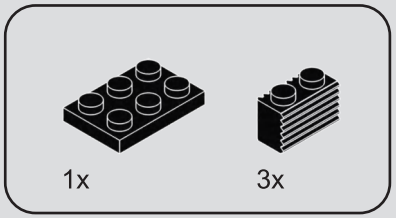

209

1

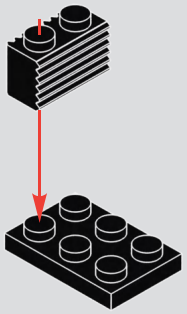

2



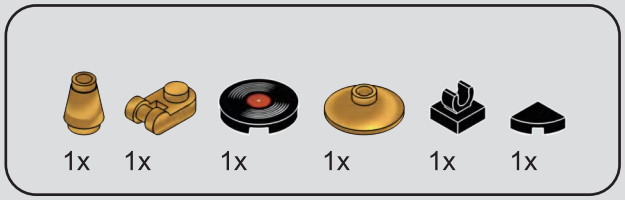

210

1

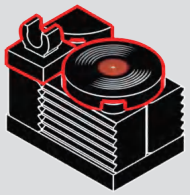

2

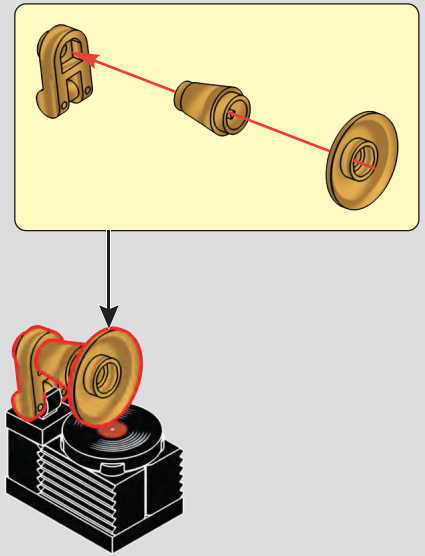

211



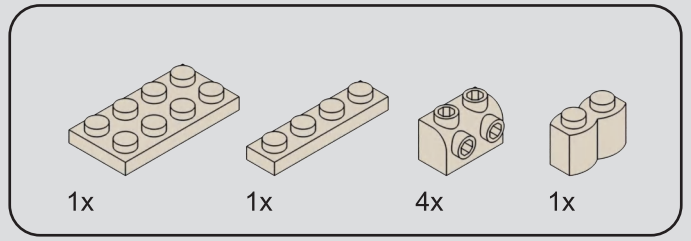

212

1

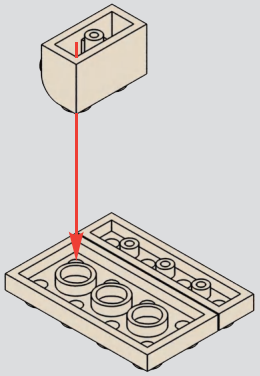

2

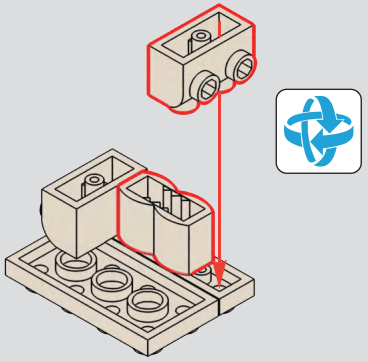

3

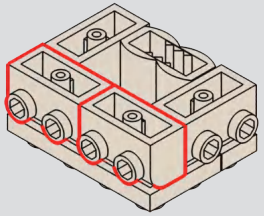

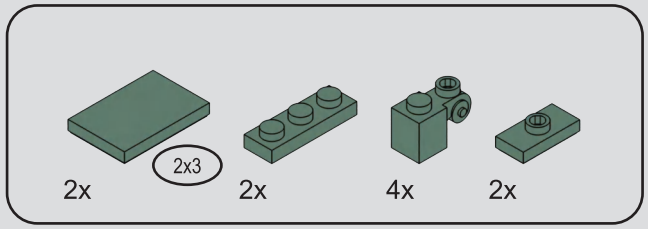

213

1

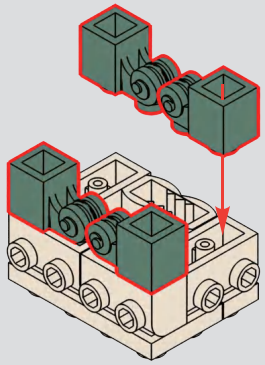

2

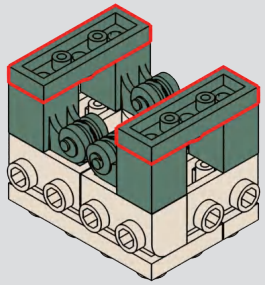

3

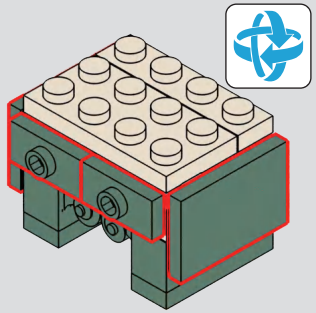

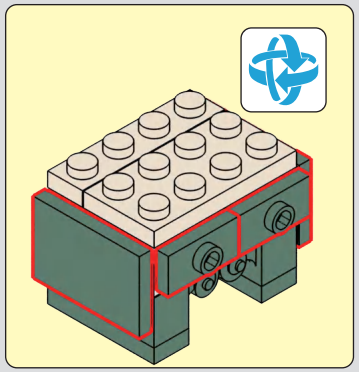

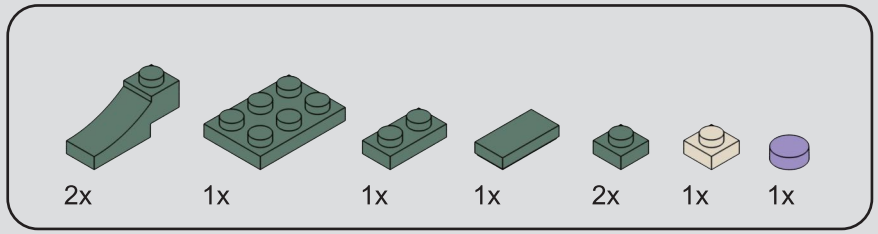

214

1

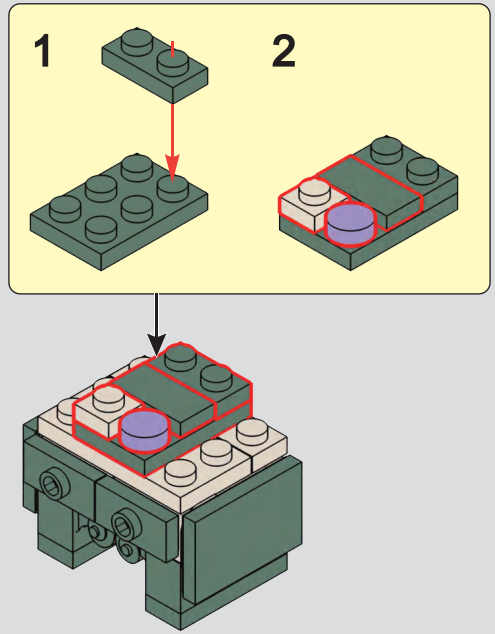

2

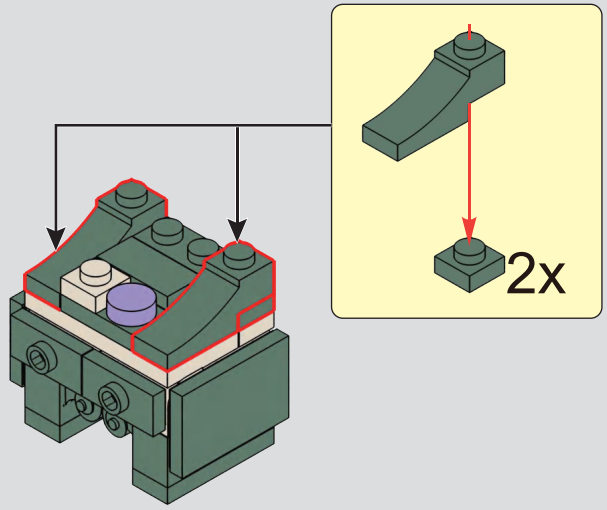

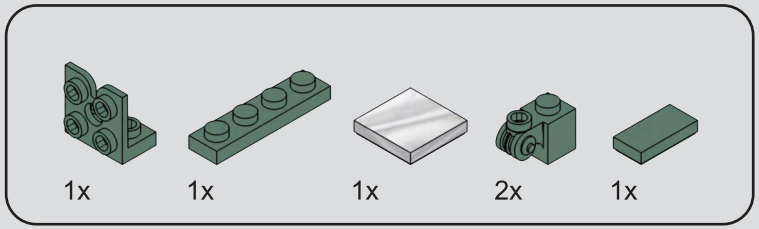

215

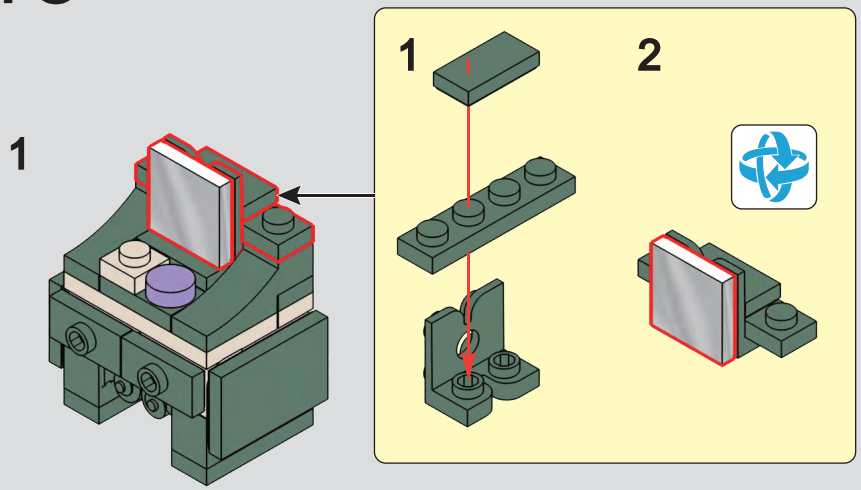

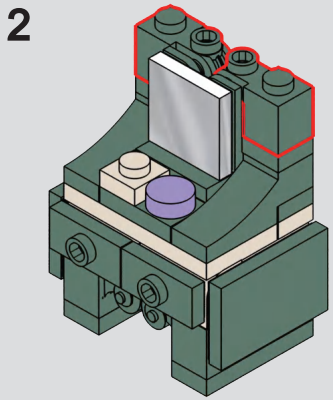

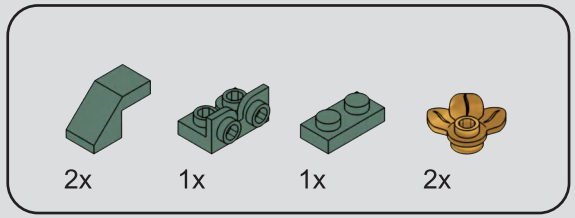

216

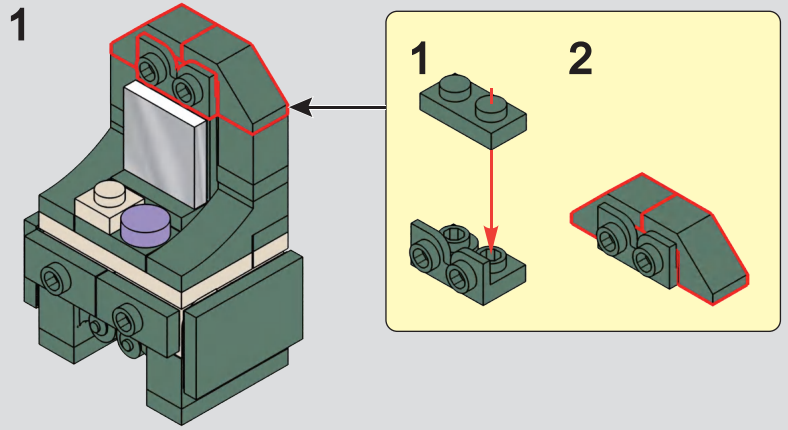

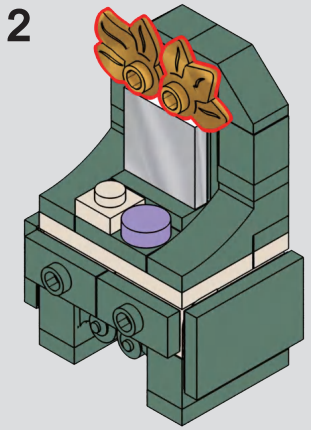

217





218

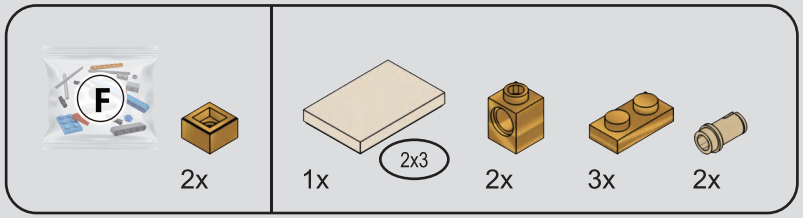

219

1

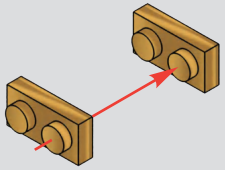

2

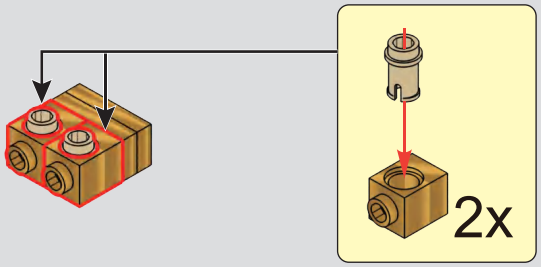

3

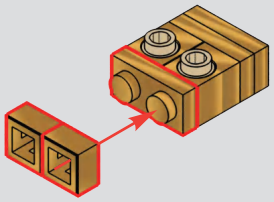

4

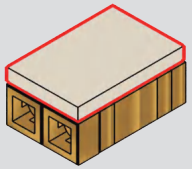

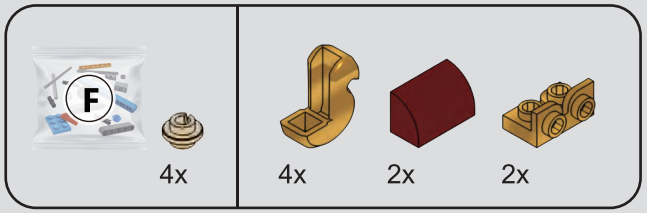

220

1

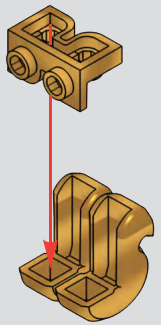

2

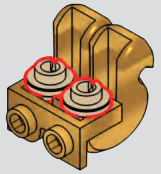

3

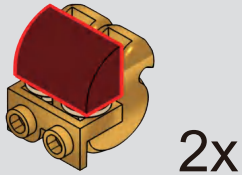

221

1

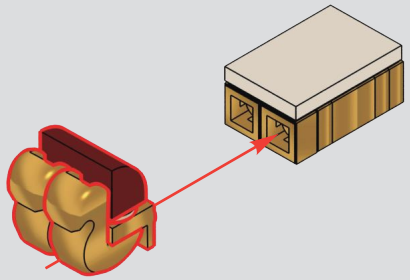

2

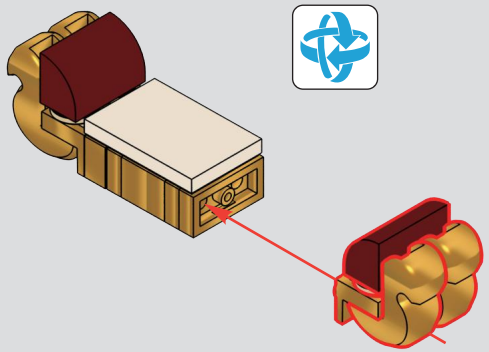

222

1

2

223

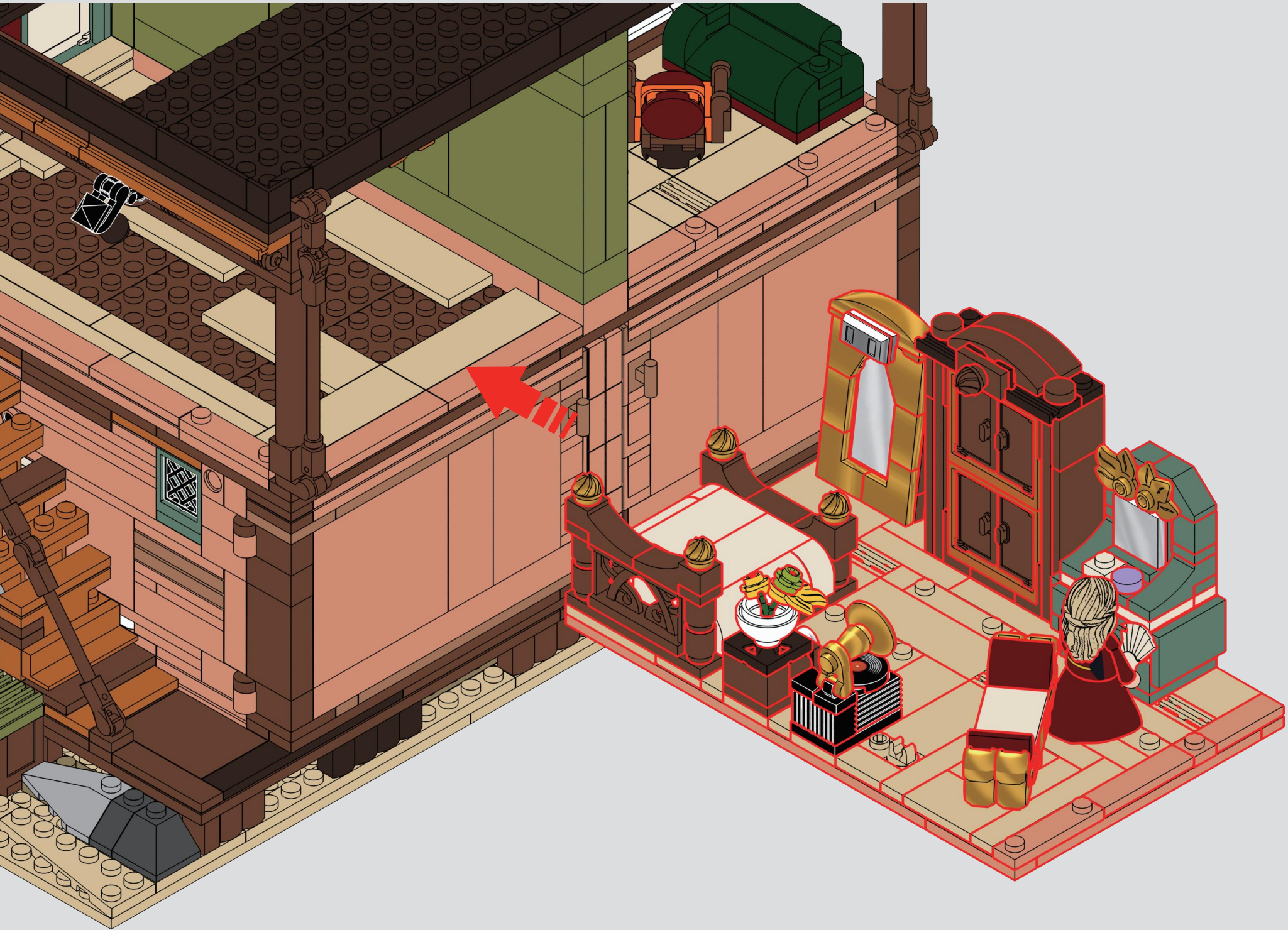


12


F


S


LUMIBRICKS
02

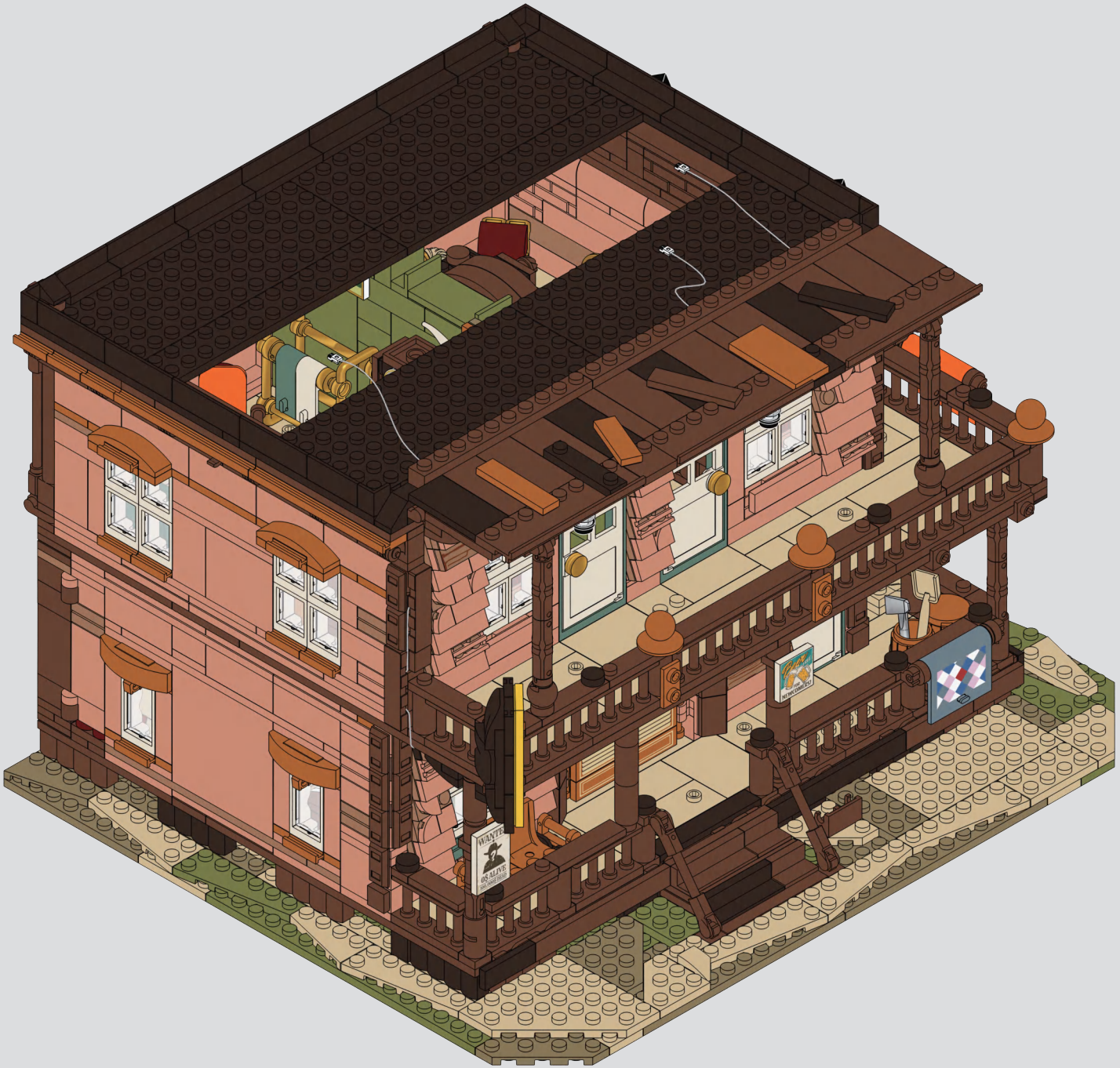

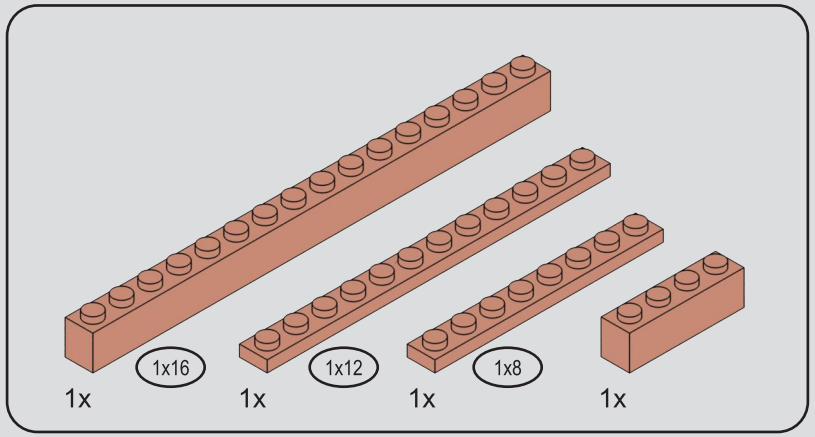

224

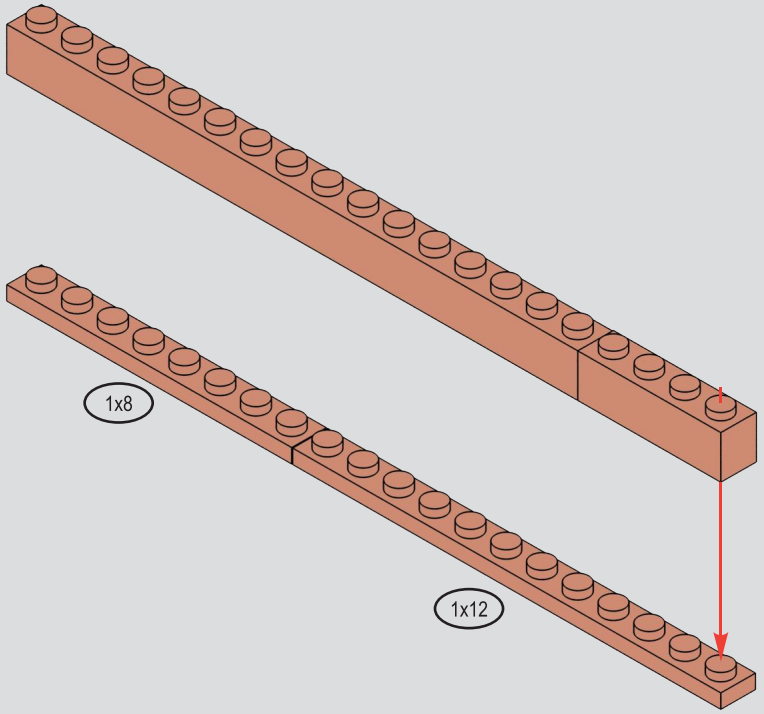

225

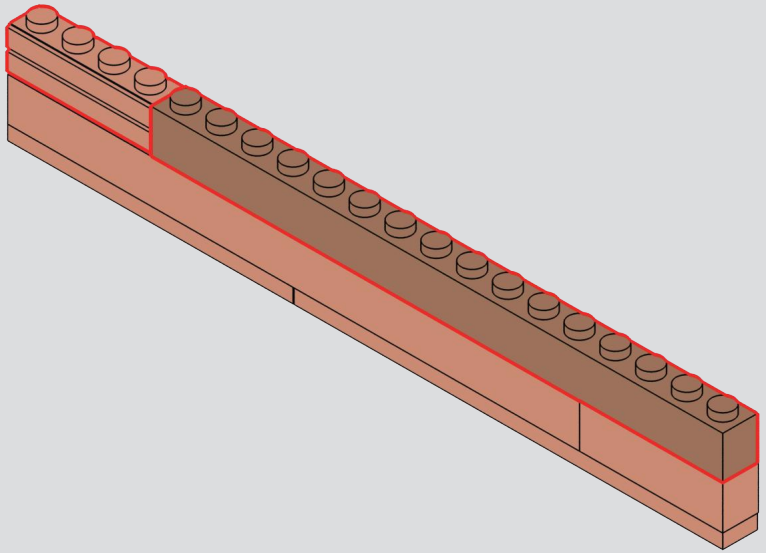

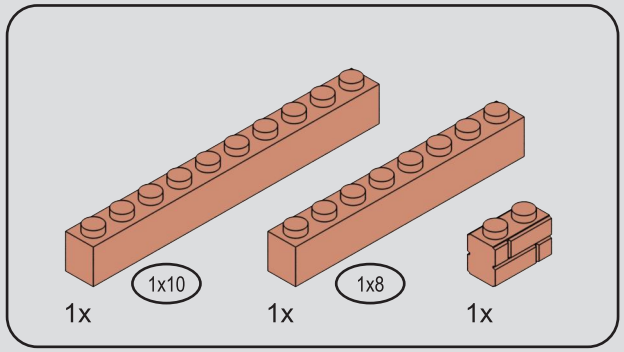

226

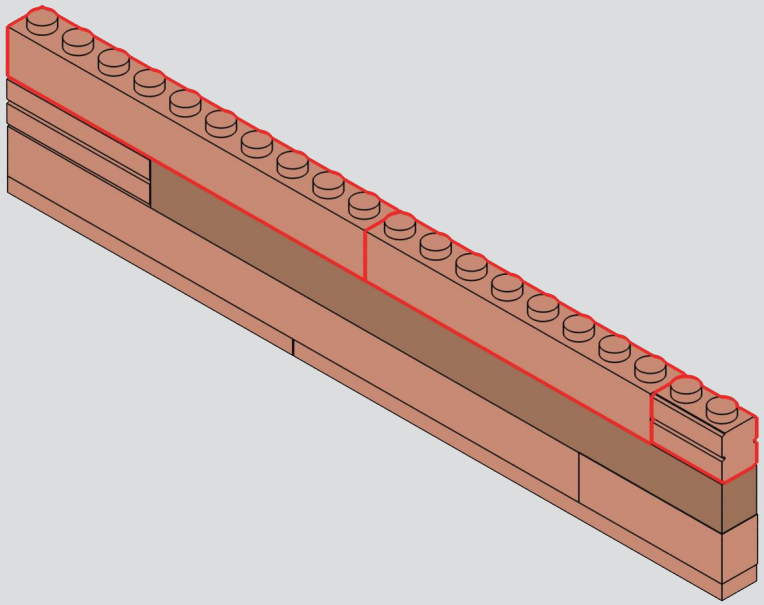

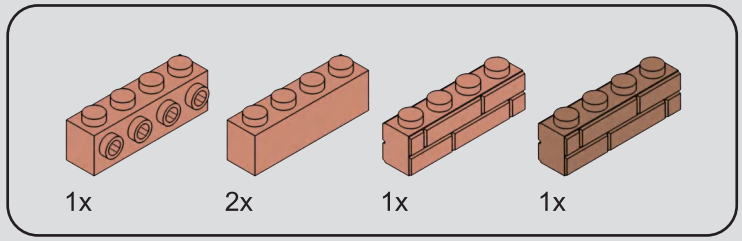

227

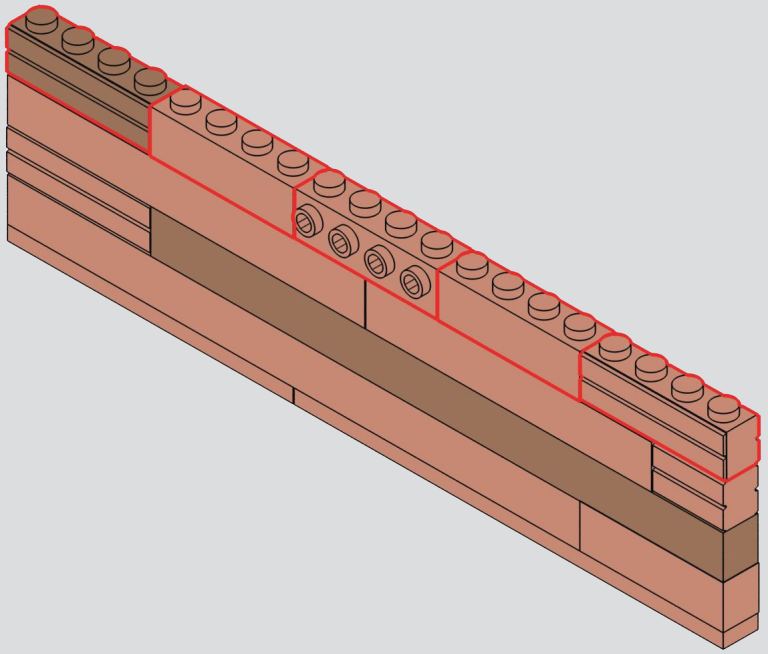

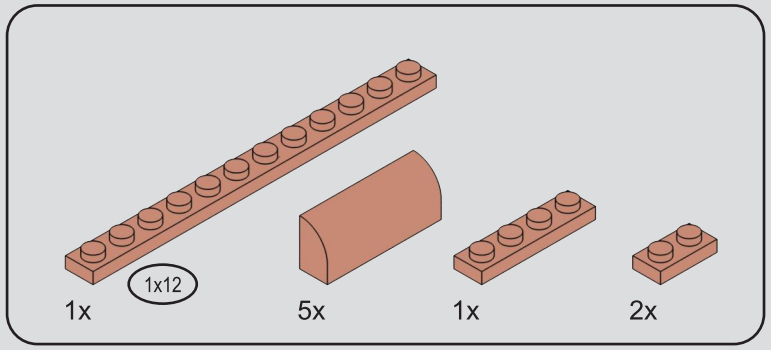

228

1

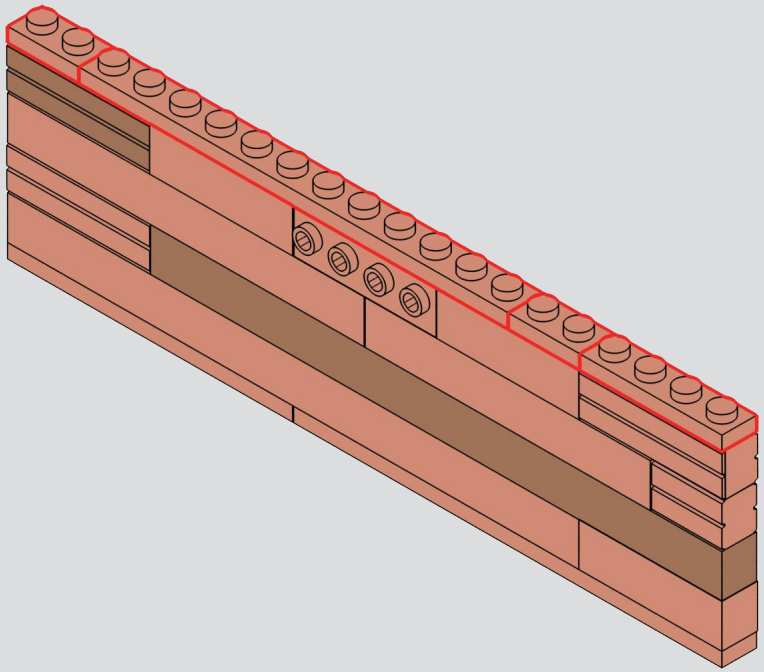

2

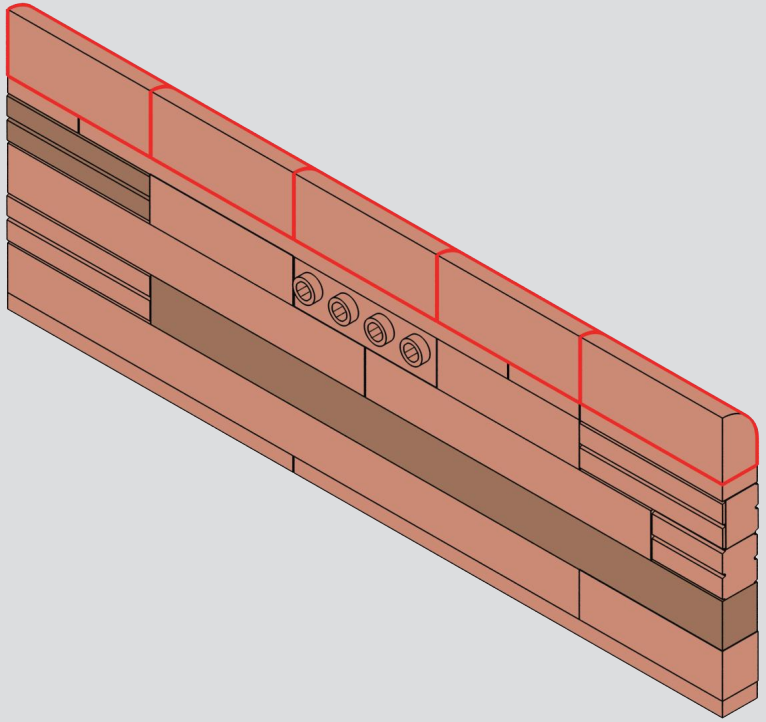

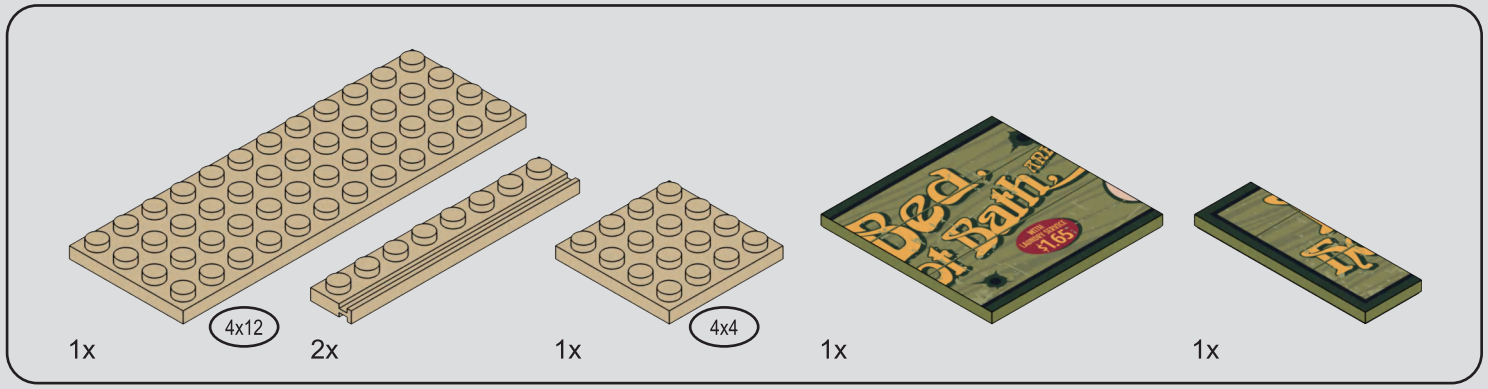

1x 2x 1x 1x 1x

229

1

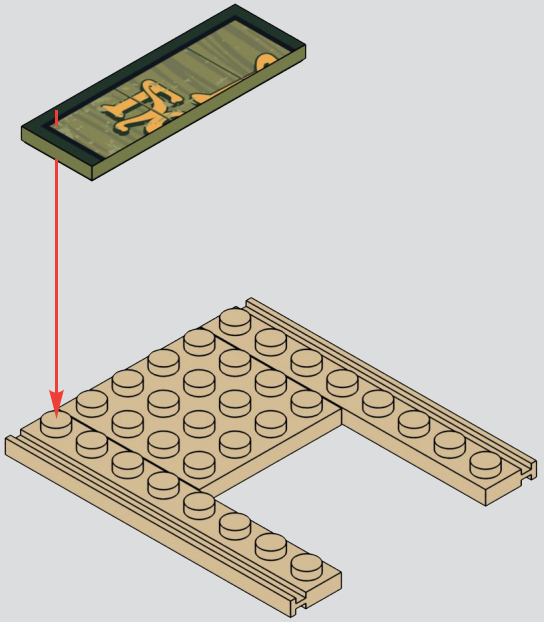

2

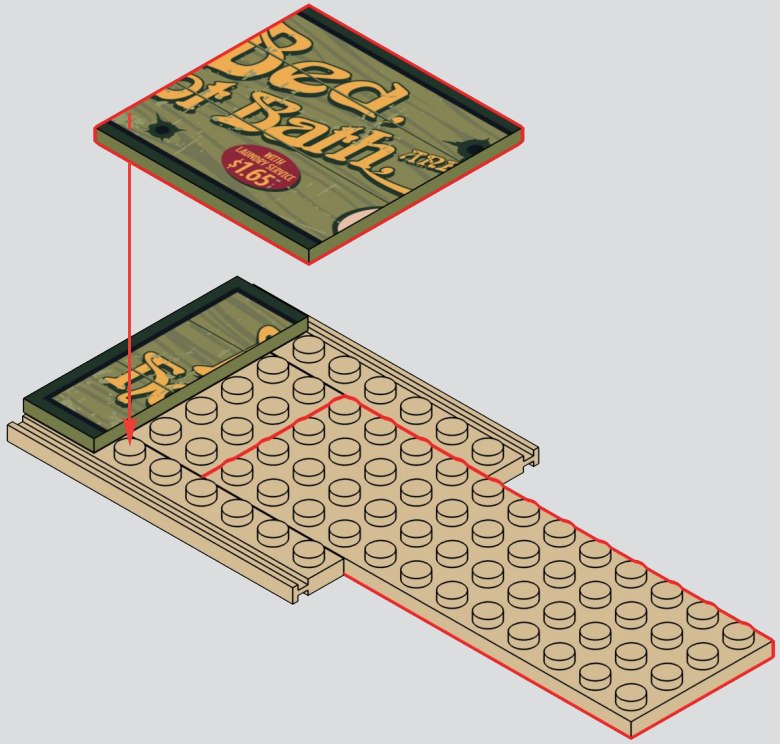

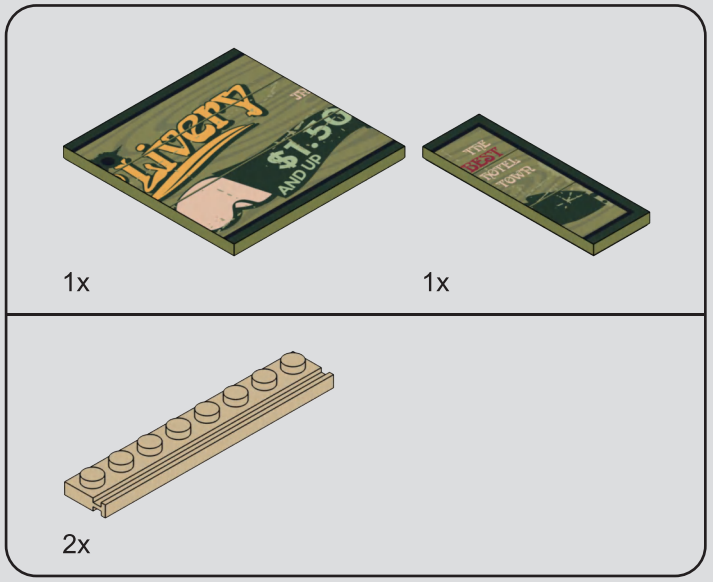

230

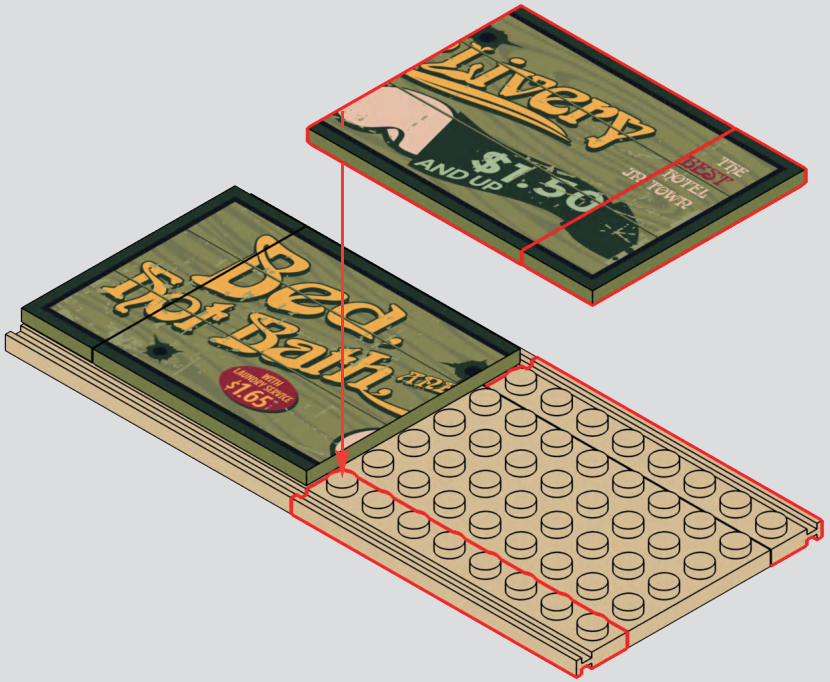

231

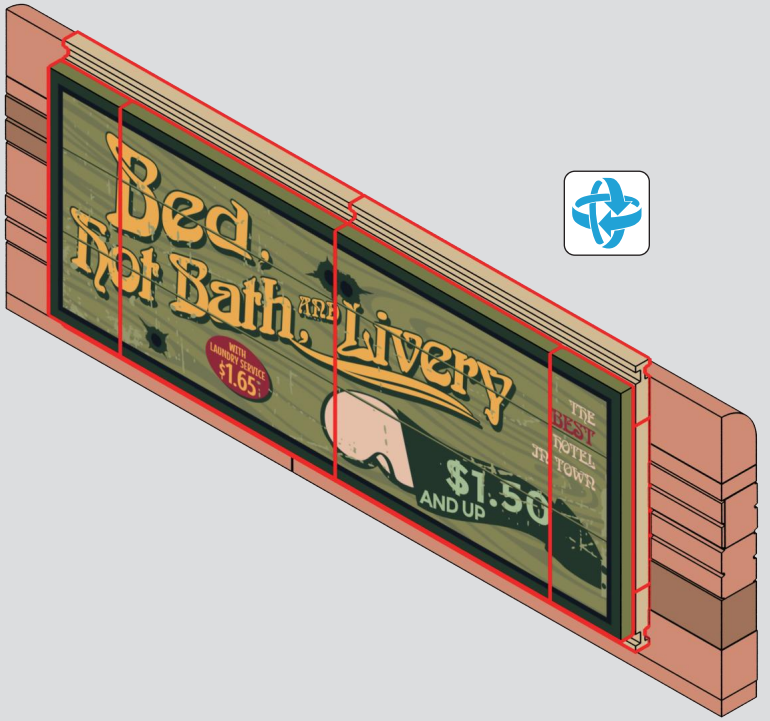



232

1



2

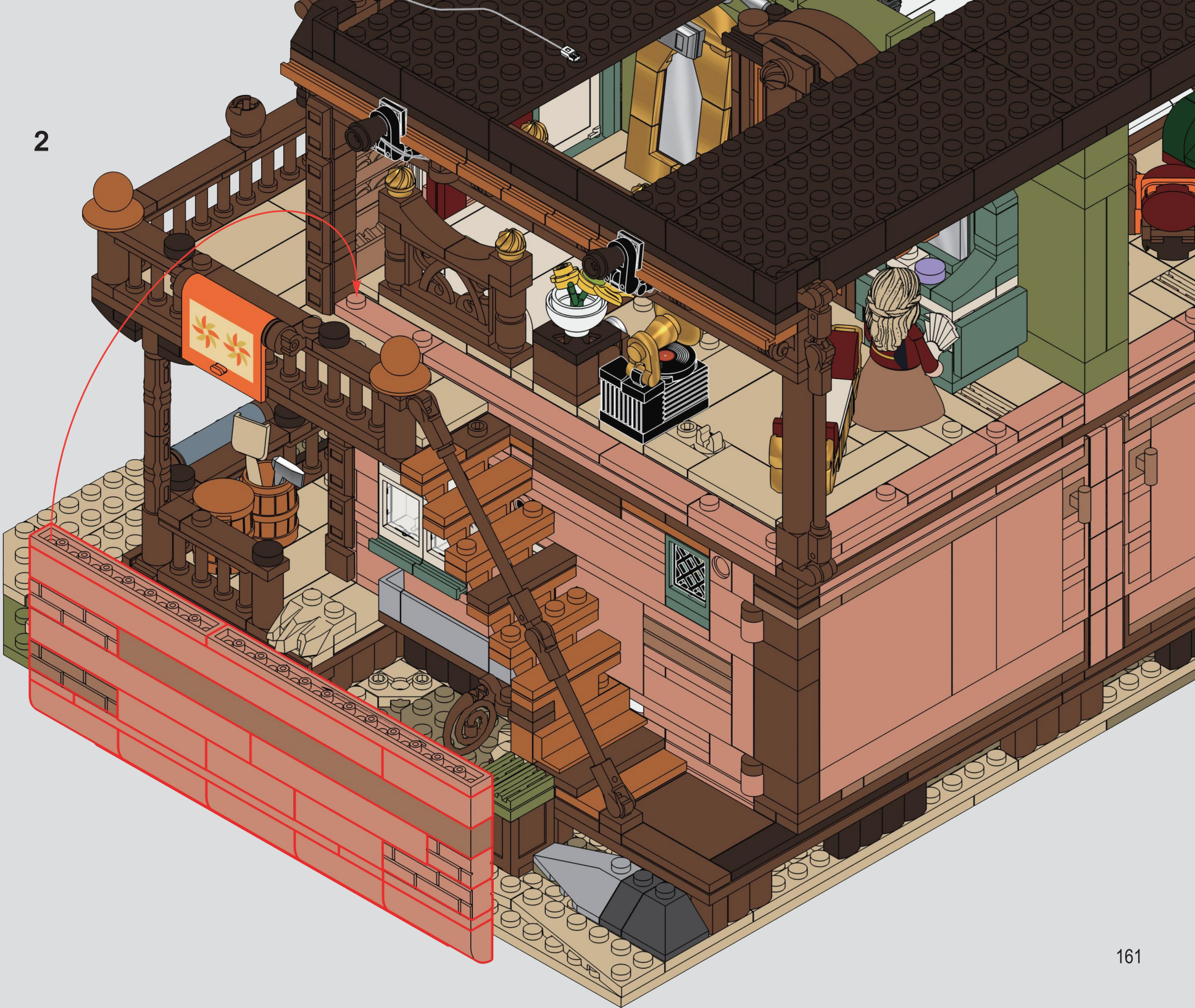

3

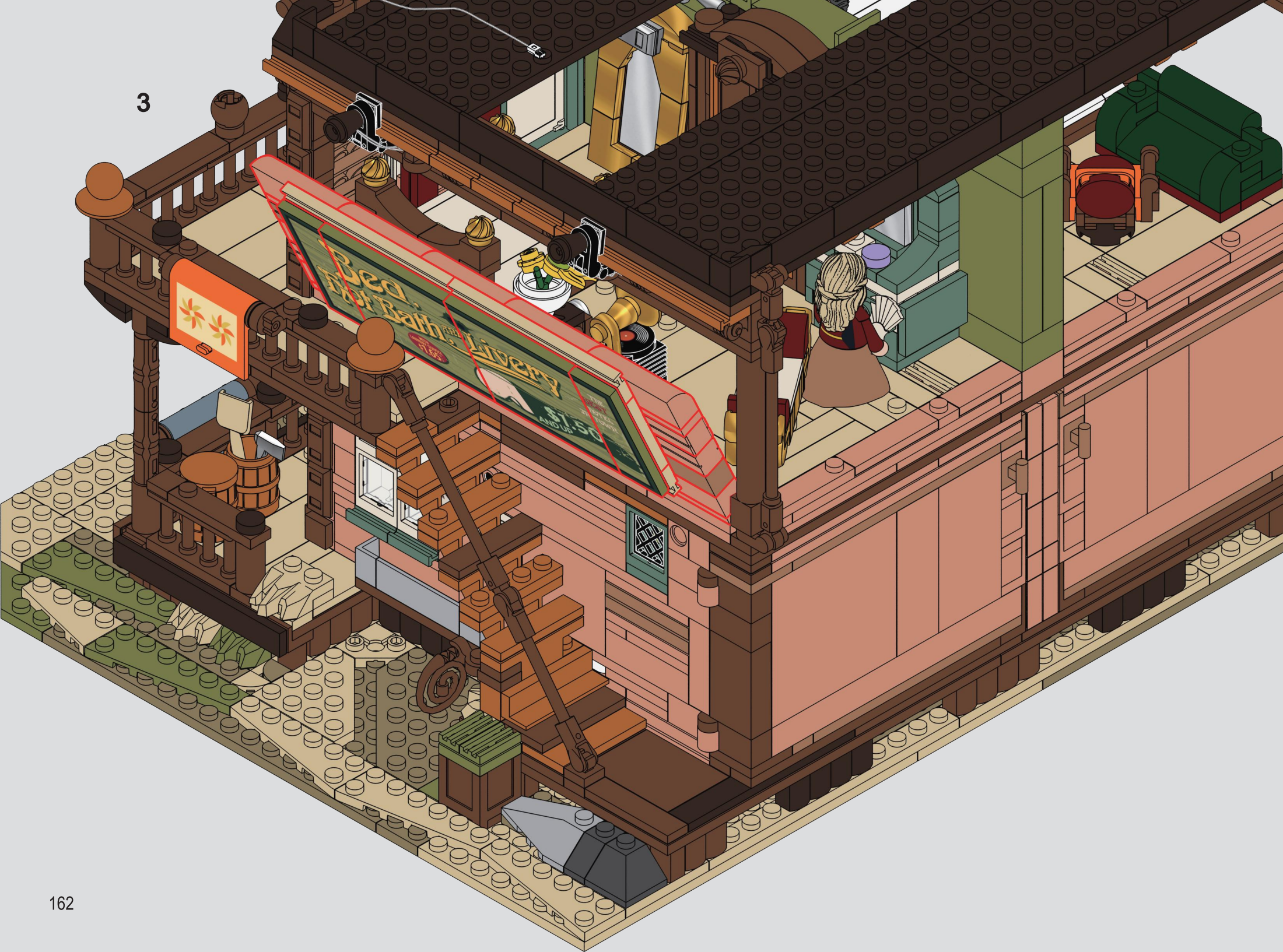

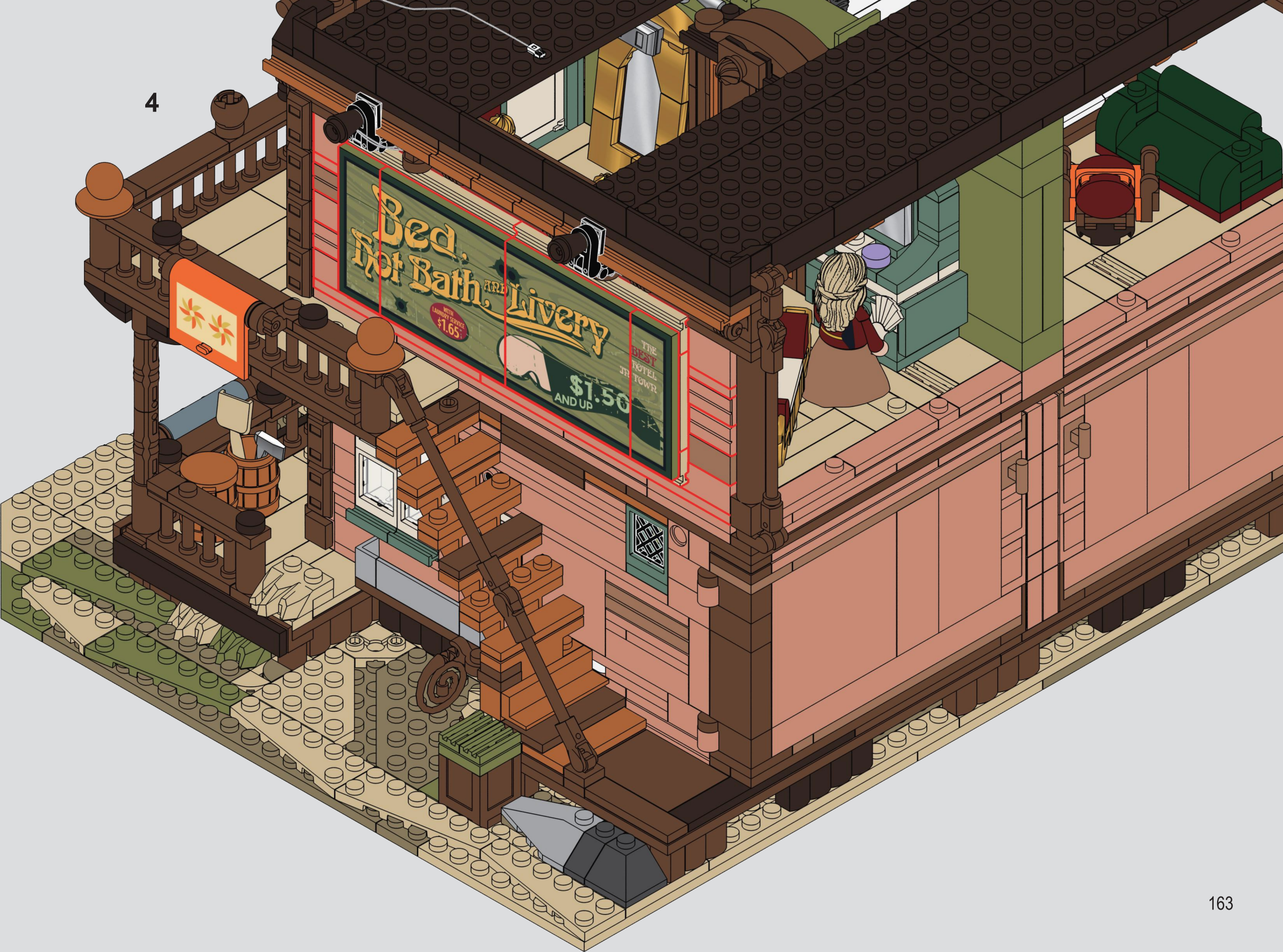
4
Bed,
Not Bath,
AND
Livery
WITH LAUNDRY SERVICE
$1.65
THE BEST HOTEL IN TOWN
$1.50
AND UP

5

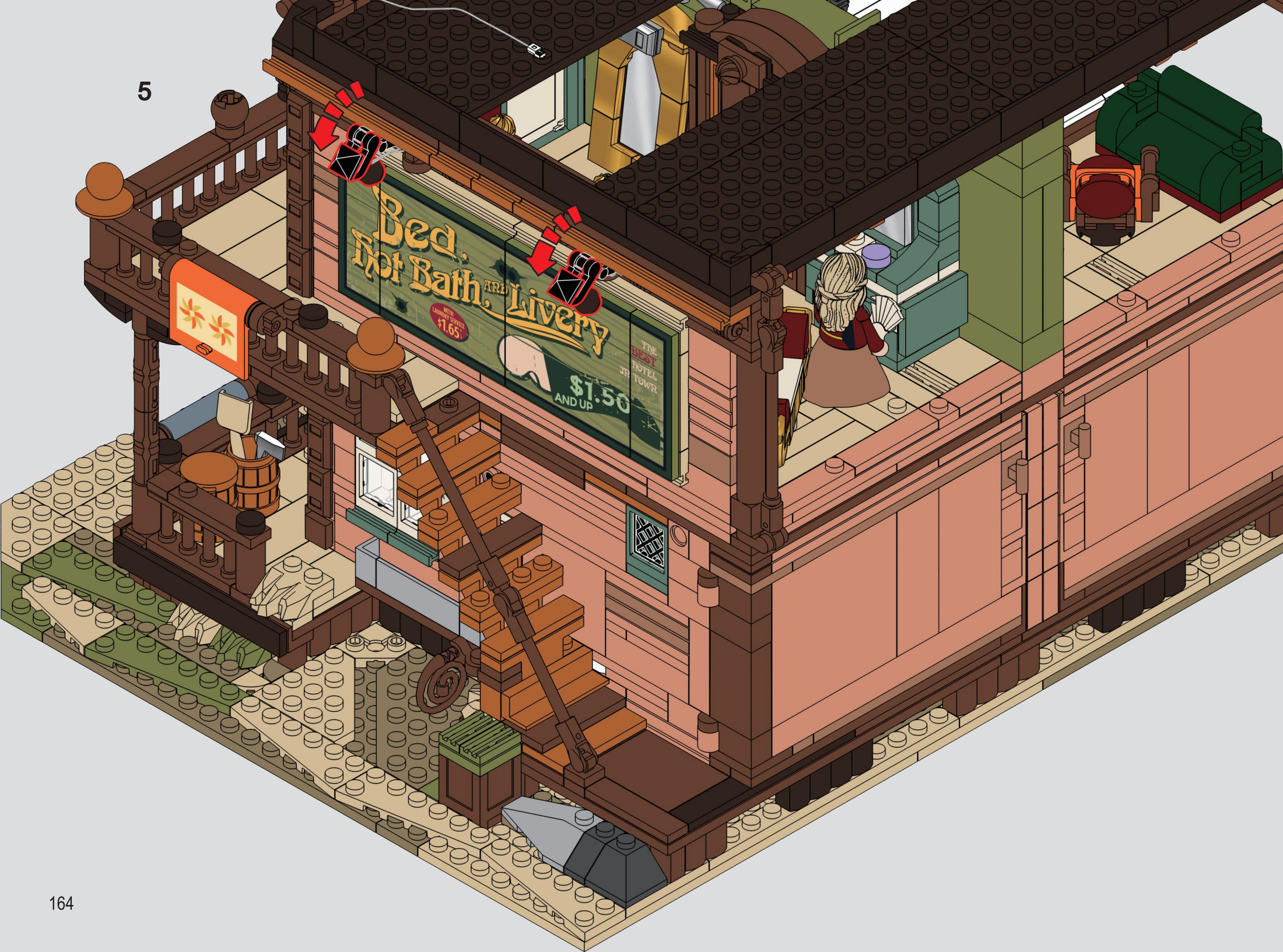
Bed,
Not Bath,
AND
Livery
WITH LAUNDRY SERVICE
$1.65
THE BEST HOTEL IN TOWN
$1.50
AND UP

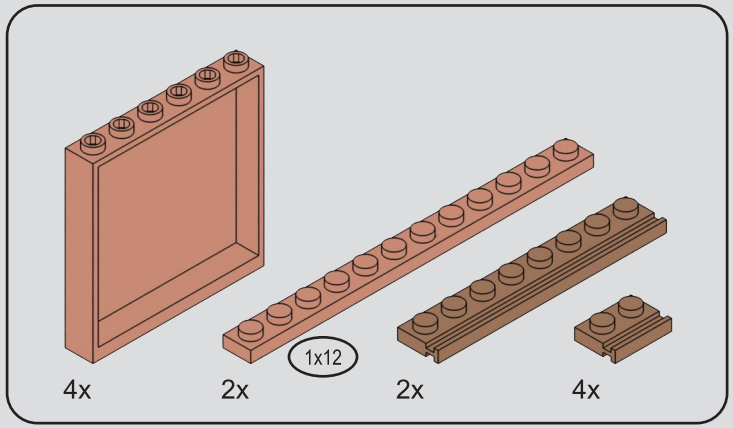

233

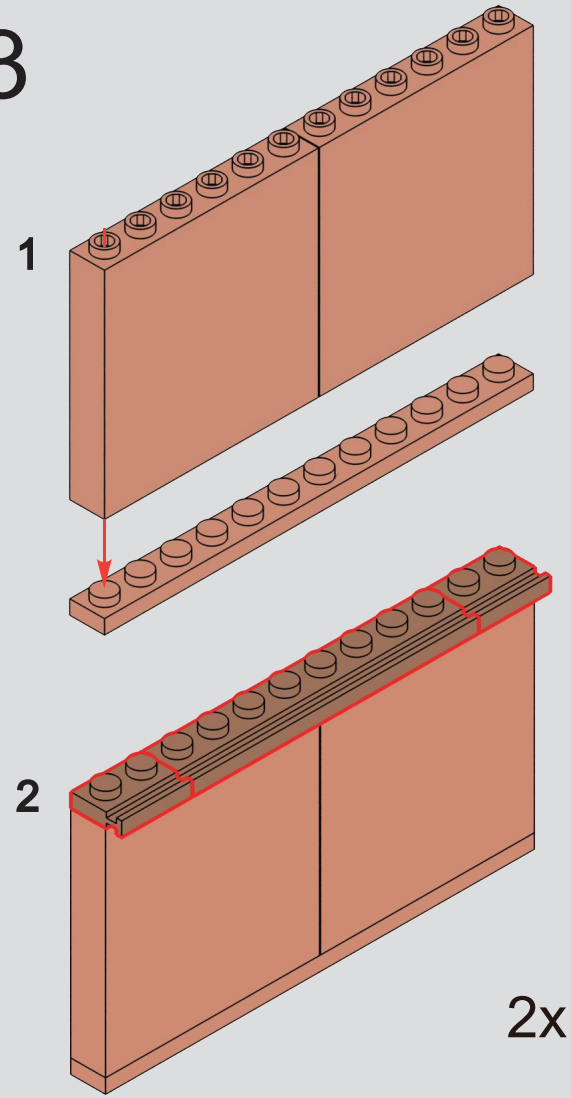

2x

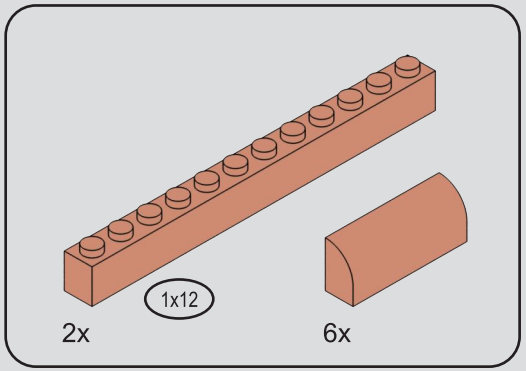

234

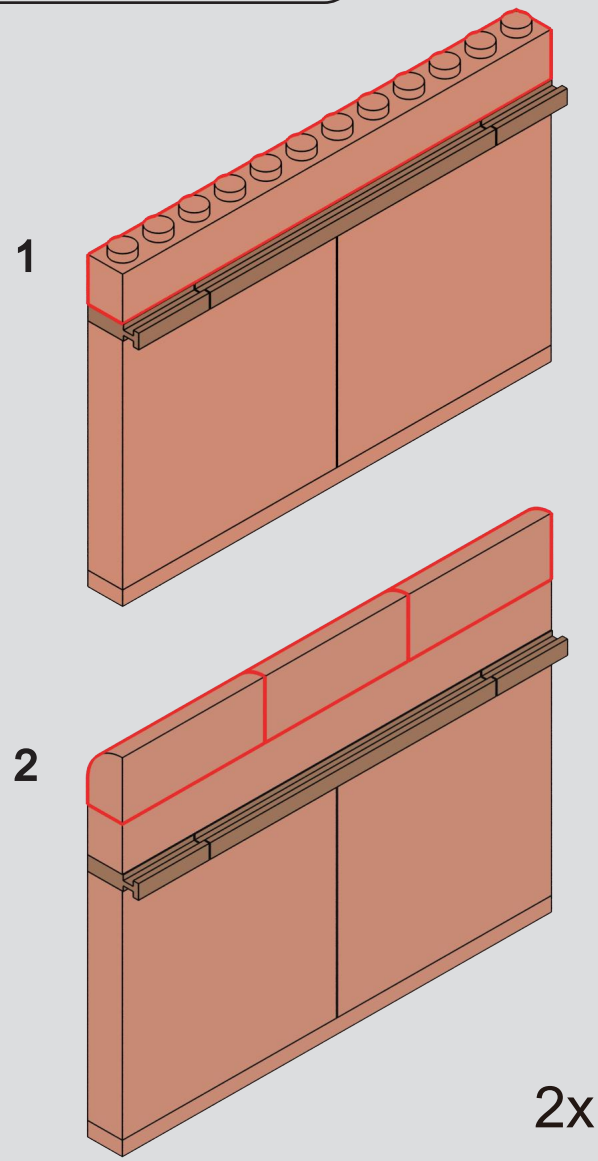

2x

235

1

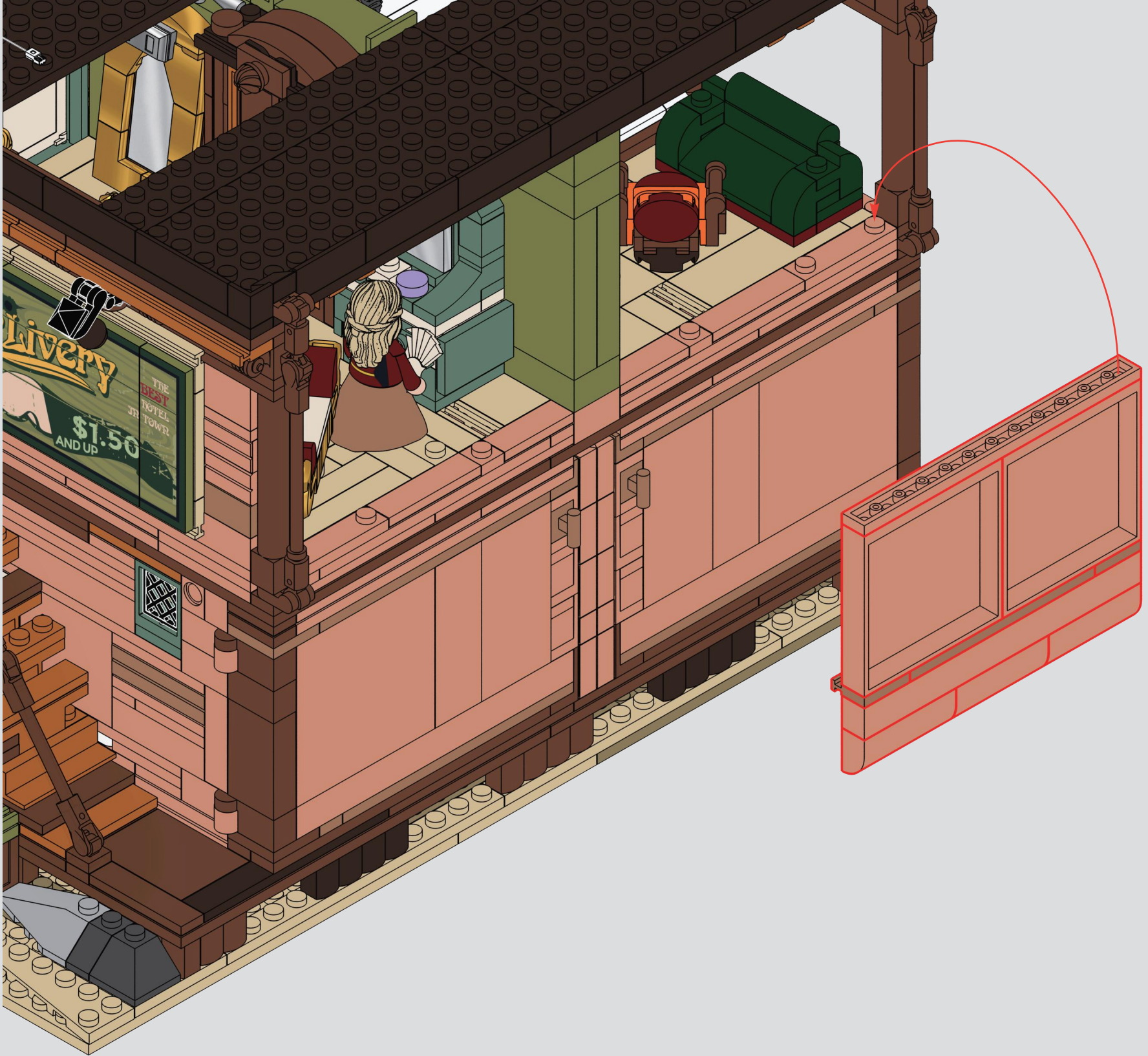

2

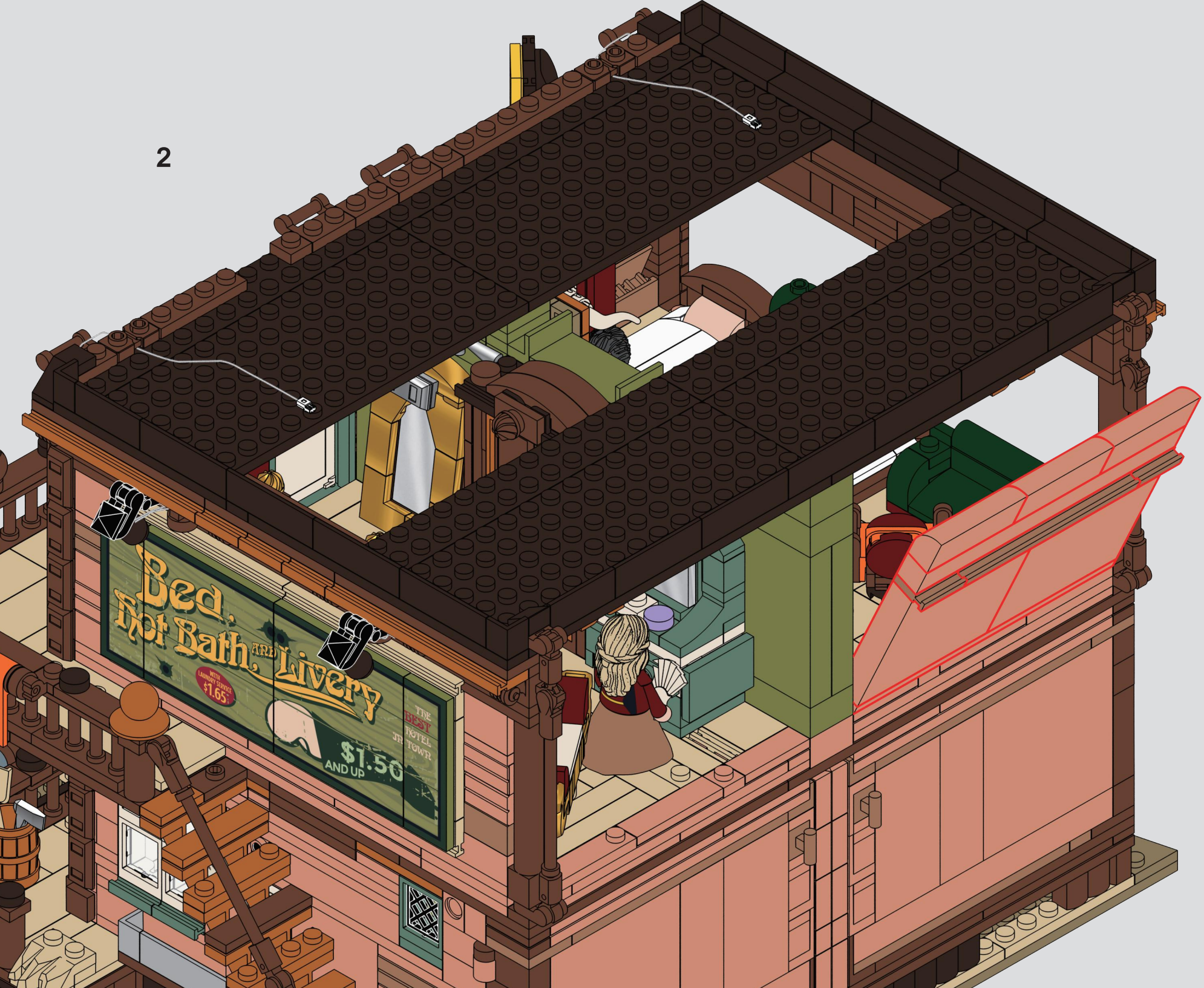
Bed,
Not Bath, AND Livery
WITH LAUNDRY SERVICE $1.65
THE BEST HOTEL IN TOWN
$1.50 AND UP

3

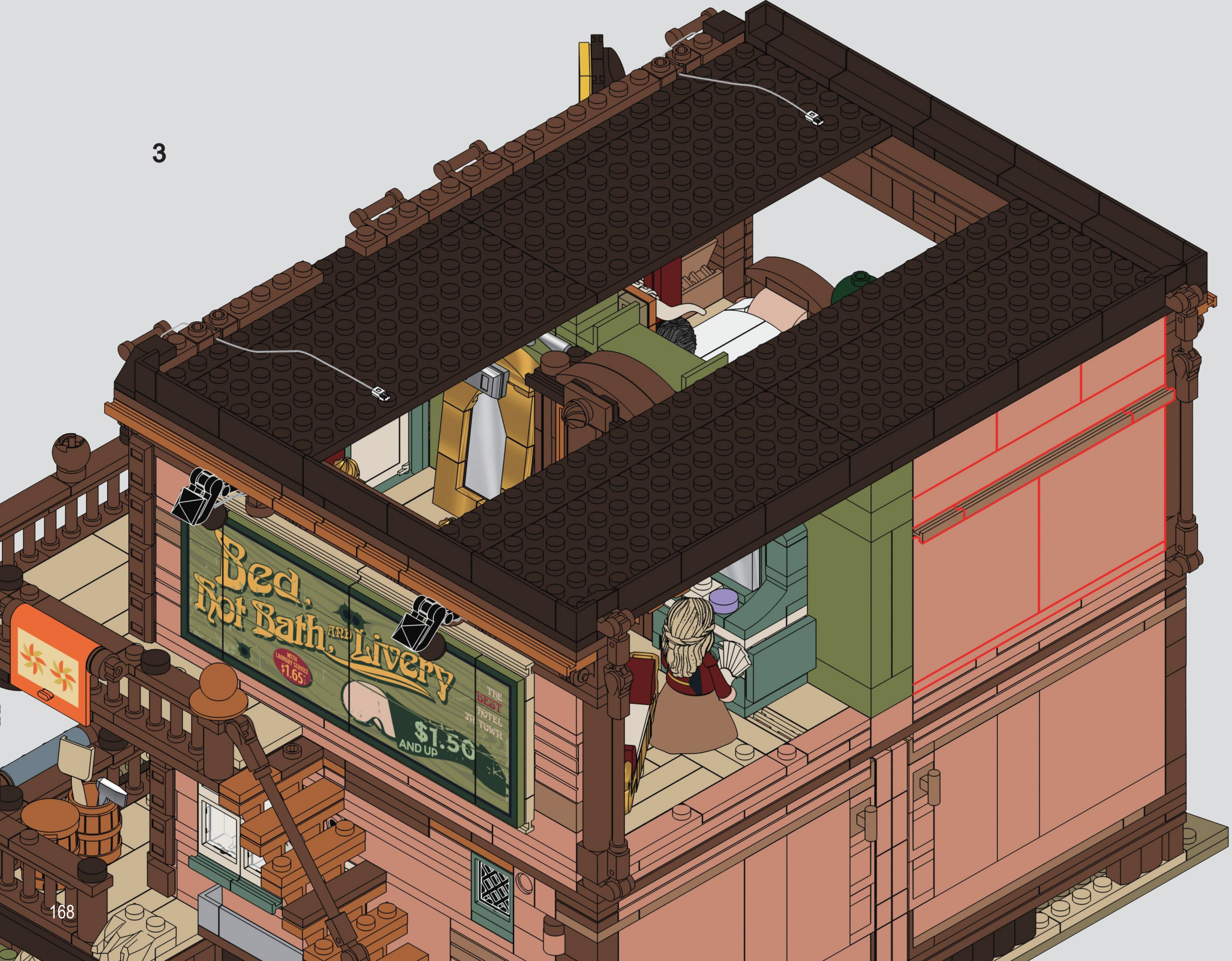
Bed,
Not Bath,
AND
Livery
WITH LAUNDRY SERVICE
$1.65
THE BEST HOTEL IN TOWN
$1.50
AND UP

4


Bed,
Hot Bath, and Livery
WITH LAUNDRY SERVICE
$1.65
THE BEST HOTEL IN TOWN
$1.50
AND UP

5


Bed,
Not Bath,
AND
Livery
WITH LAUNDRY SERVICE
$1.65
THE BEST HOTEL IN TOWN
$1.50
AND UP

6

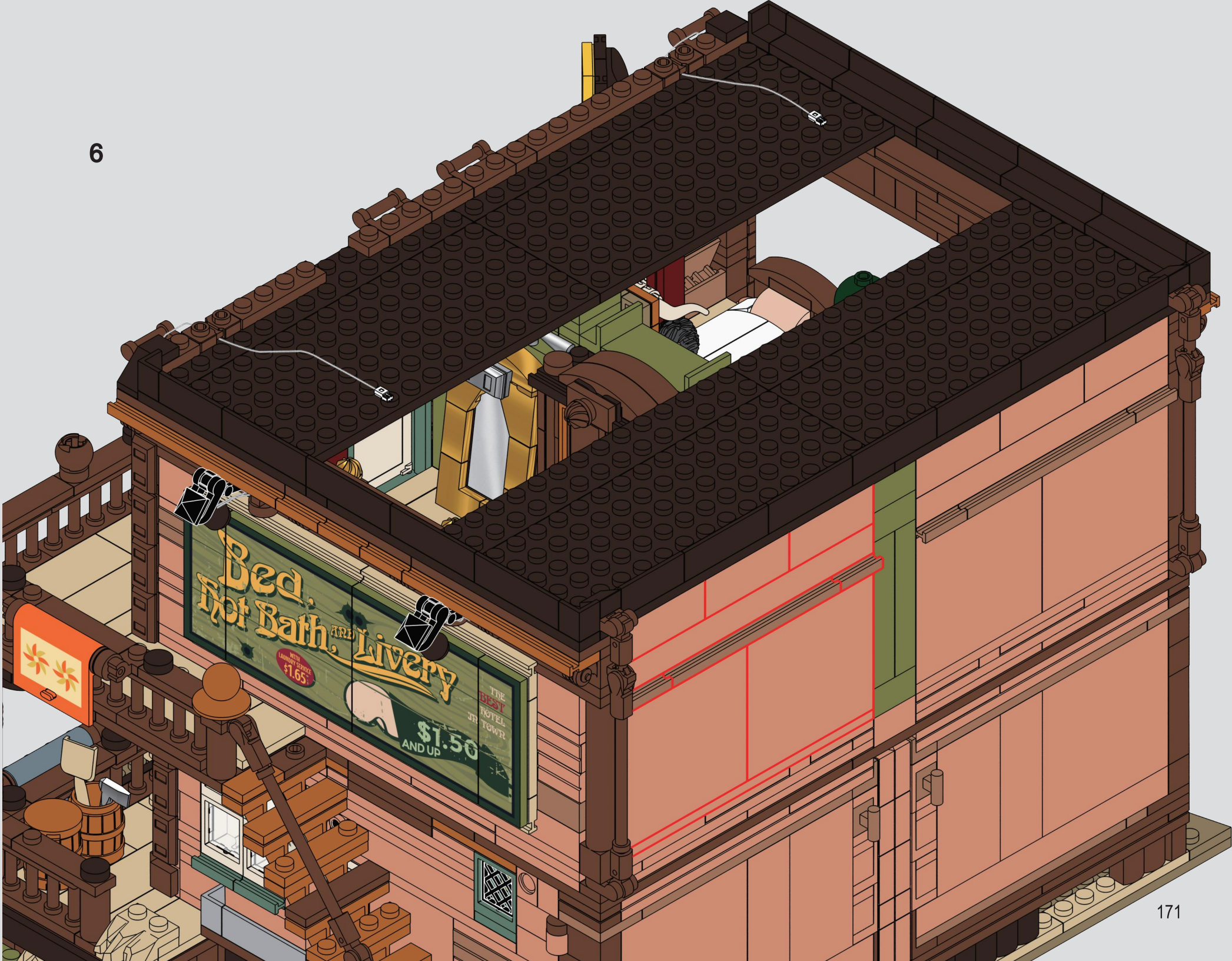
Bed,
not Bath, AND Livery
WITH LAUNDRY SERVICE $1.65
THE BEST HOTEL IN TOWN
$1.50 AND UP

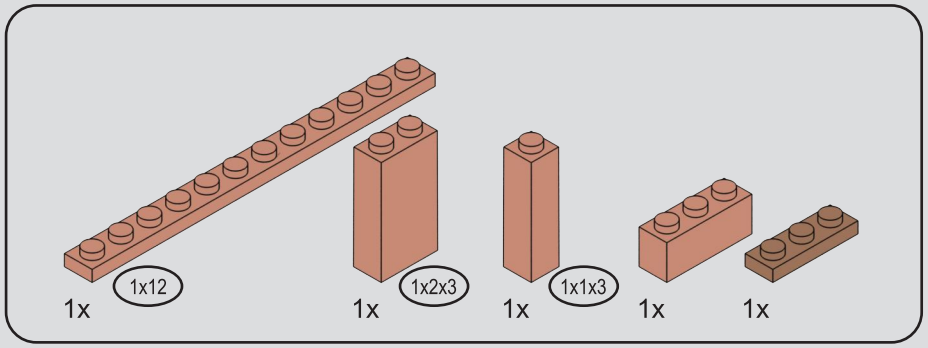

236

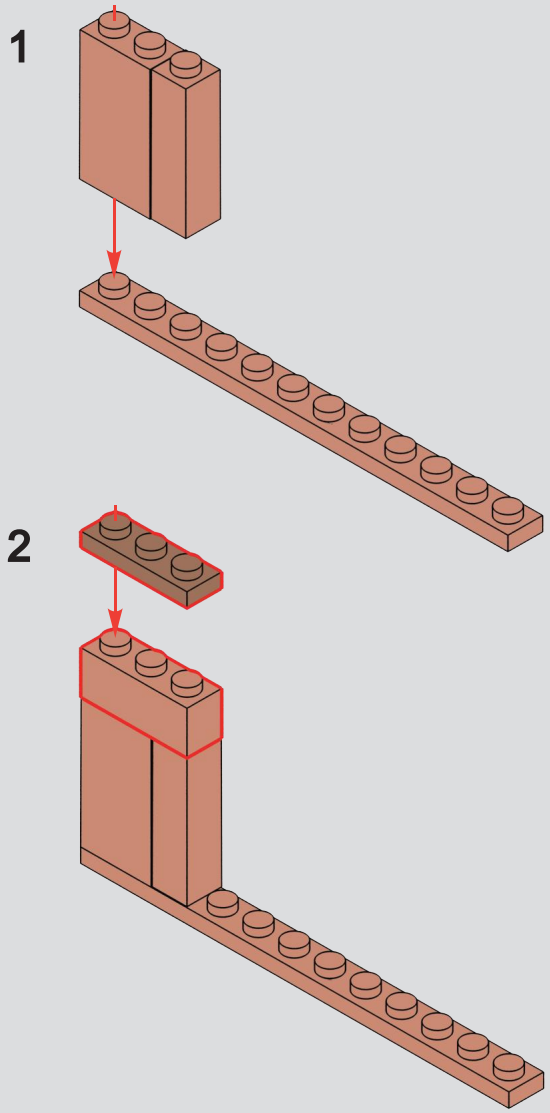

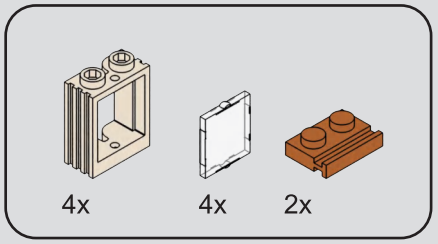

237

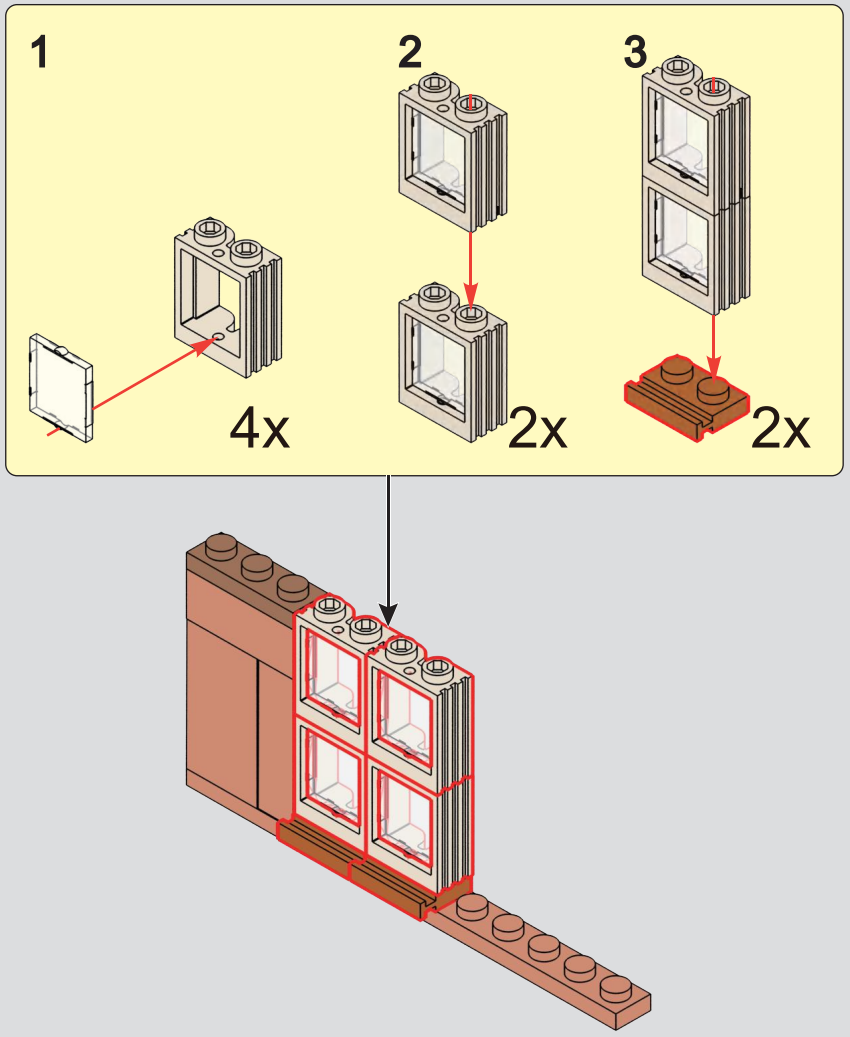

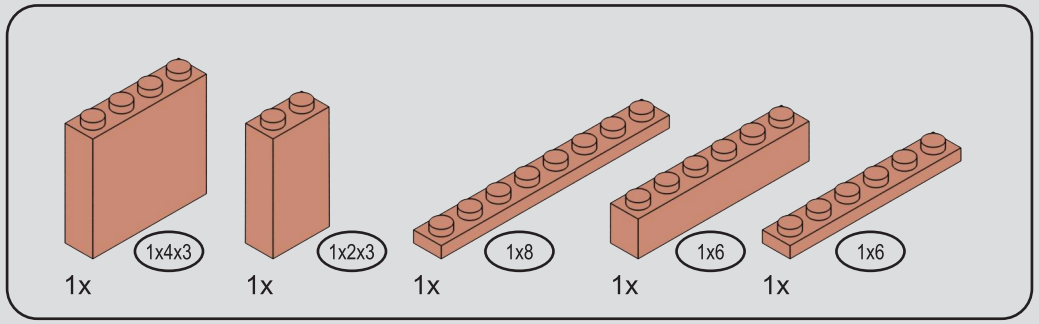

238

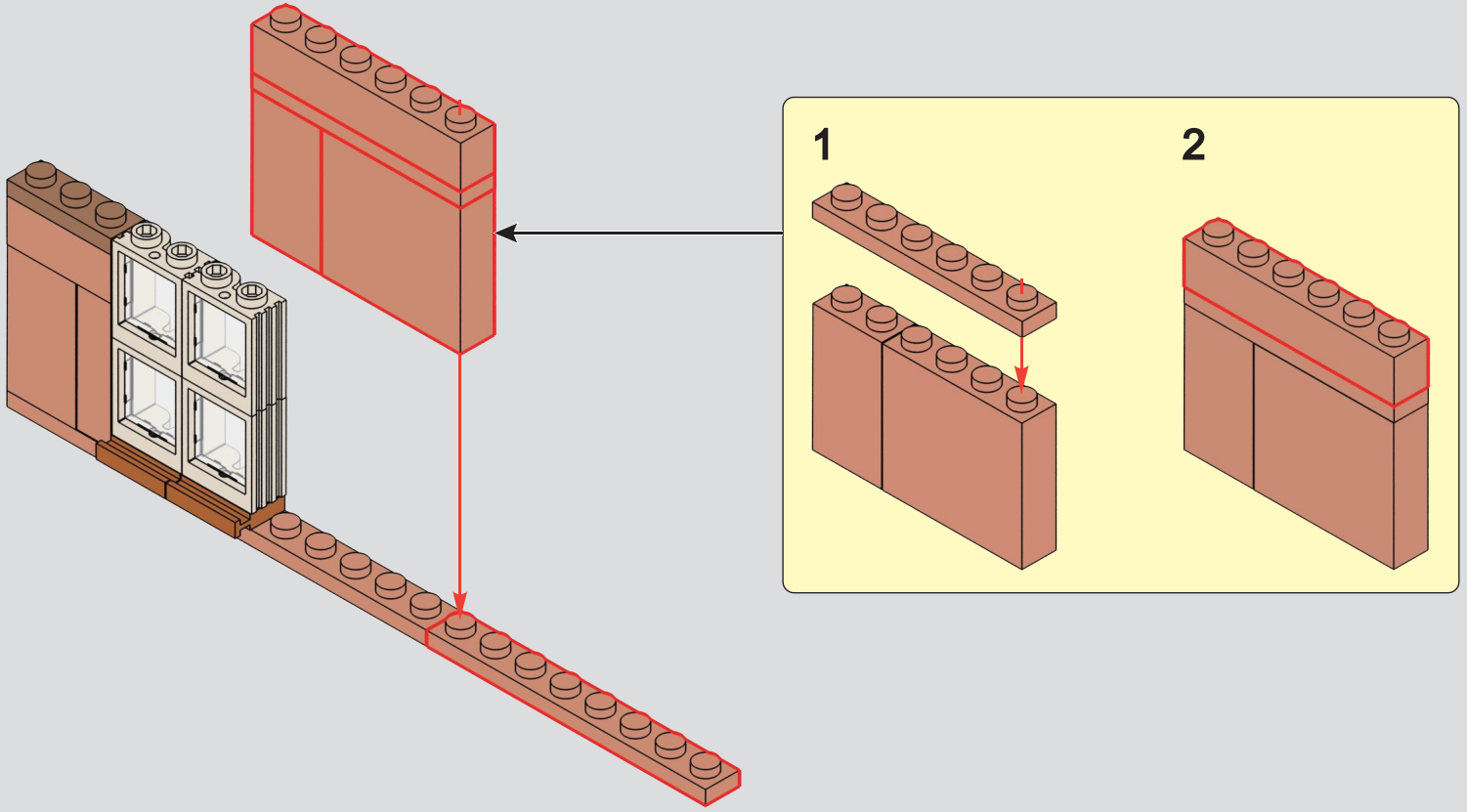

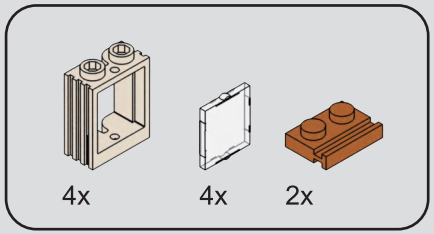

239

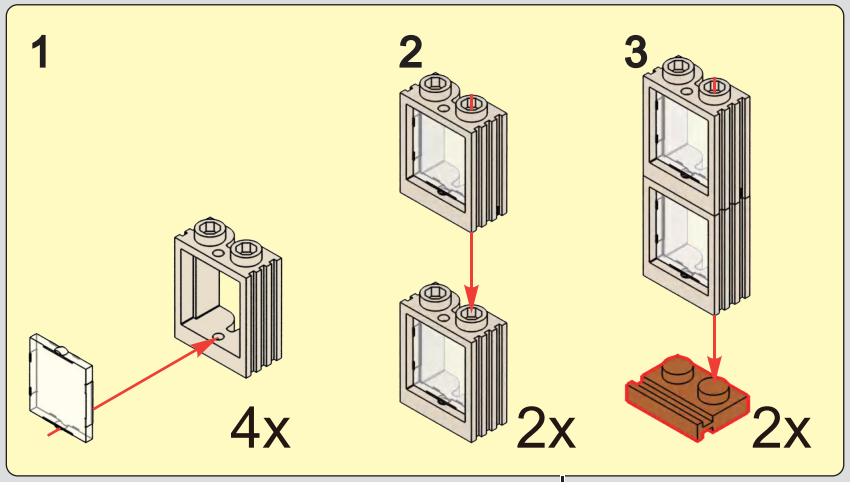

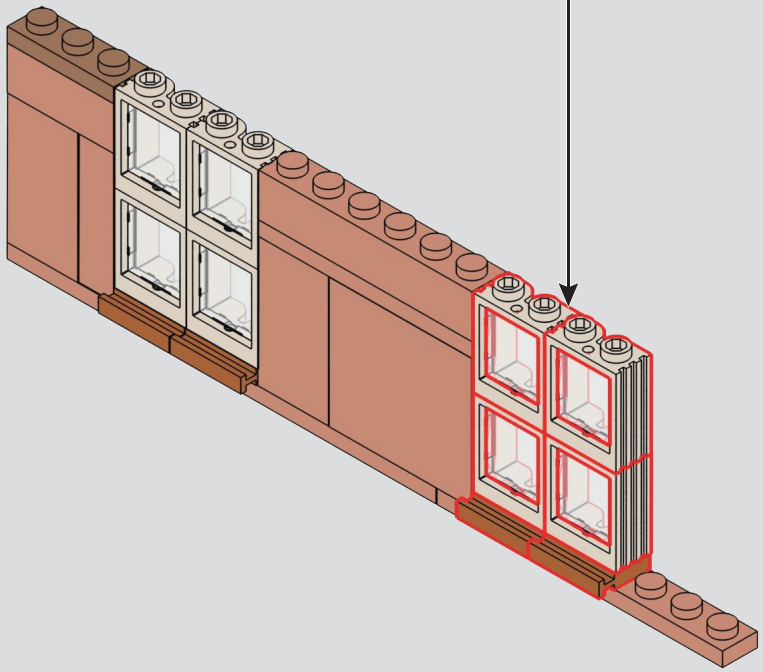

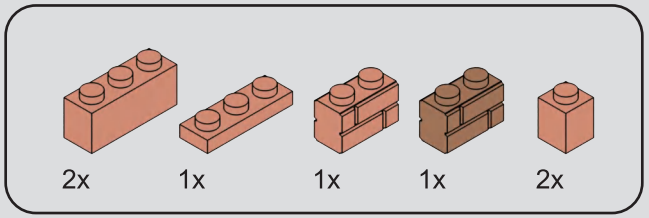

240

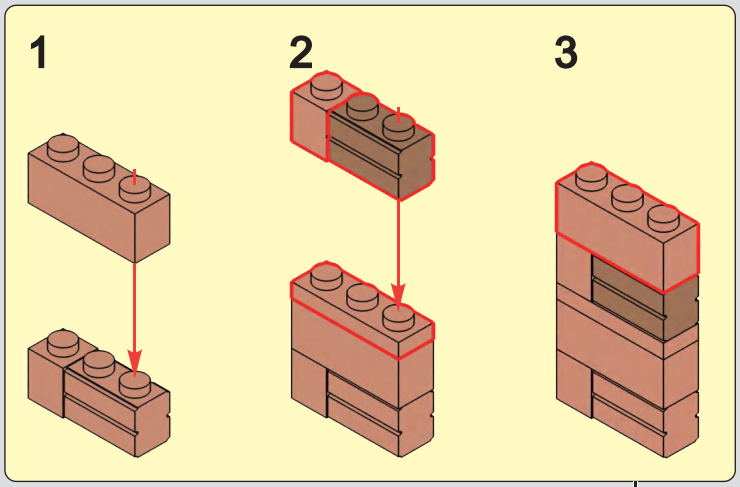

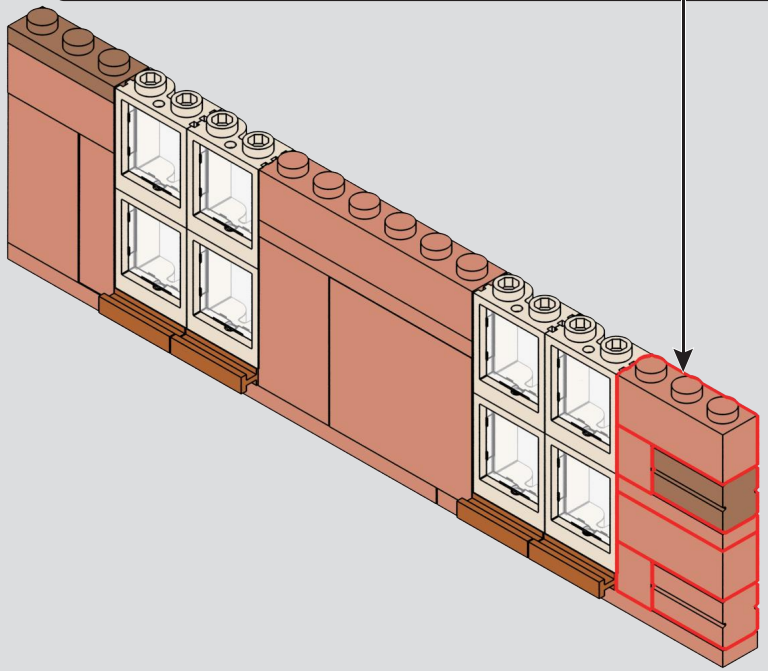

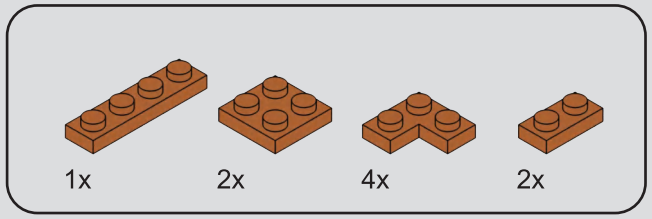

241

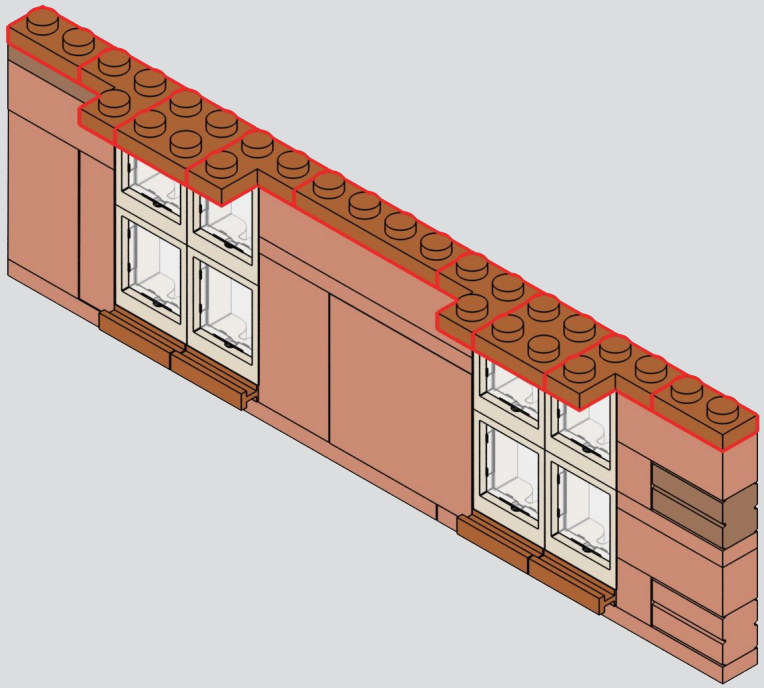

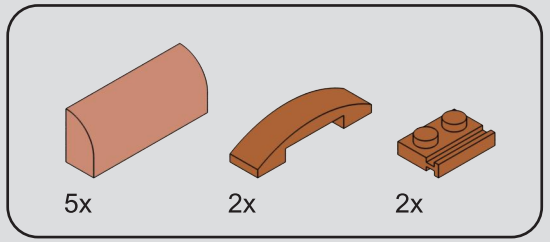

242

1

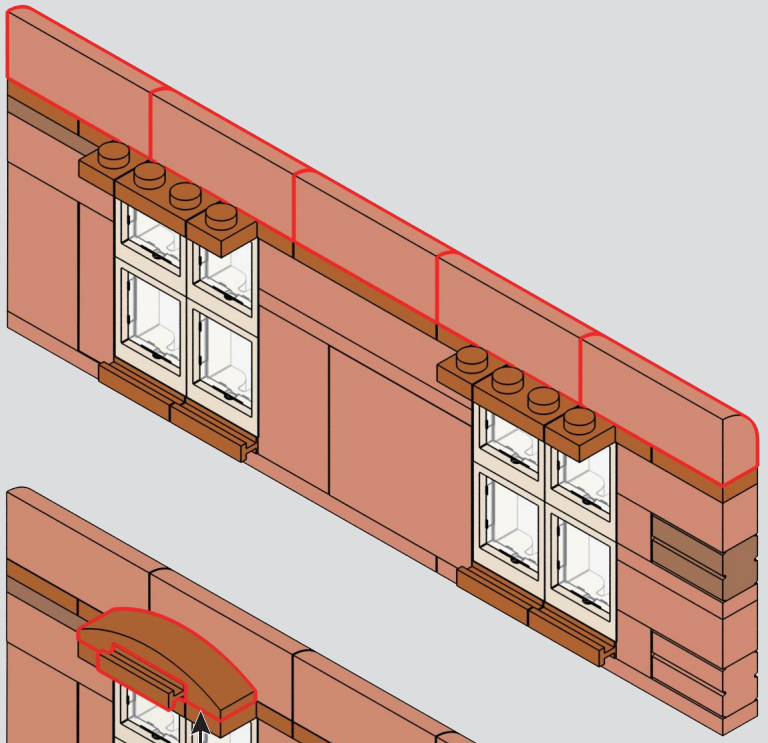

2

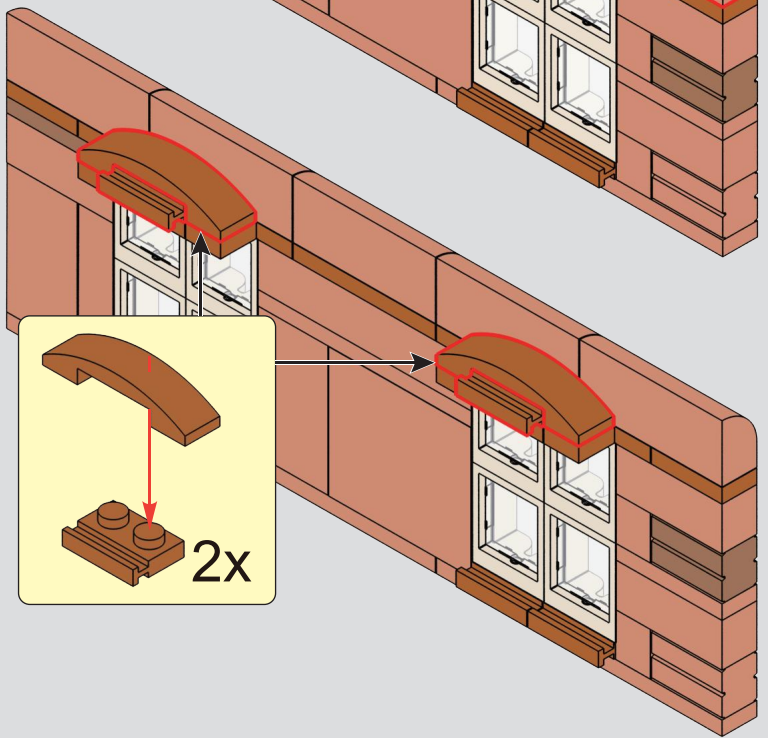

243

1

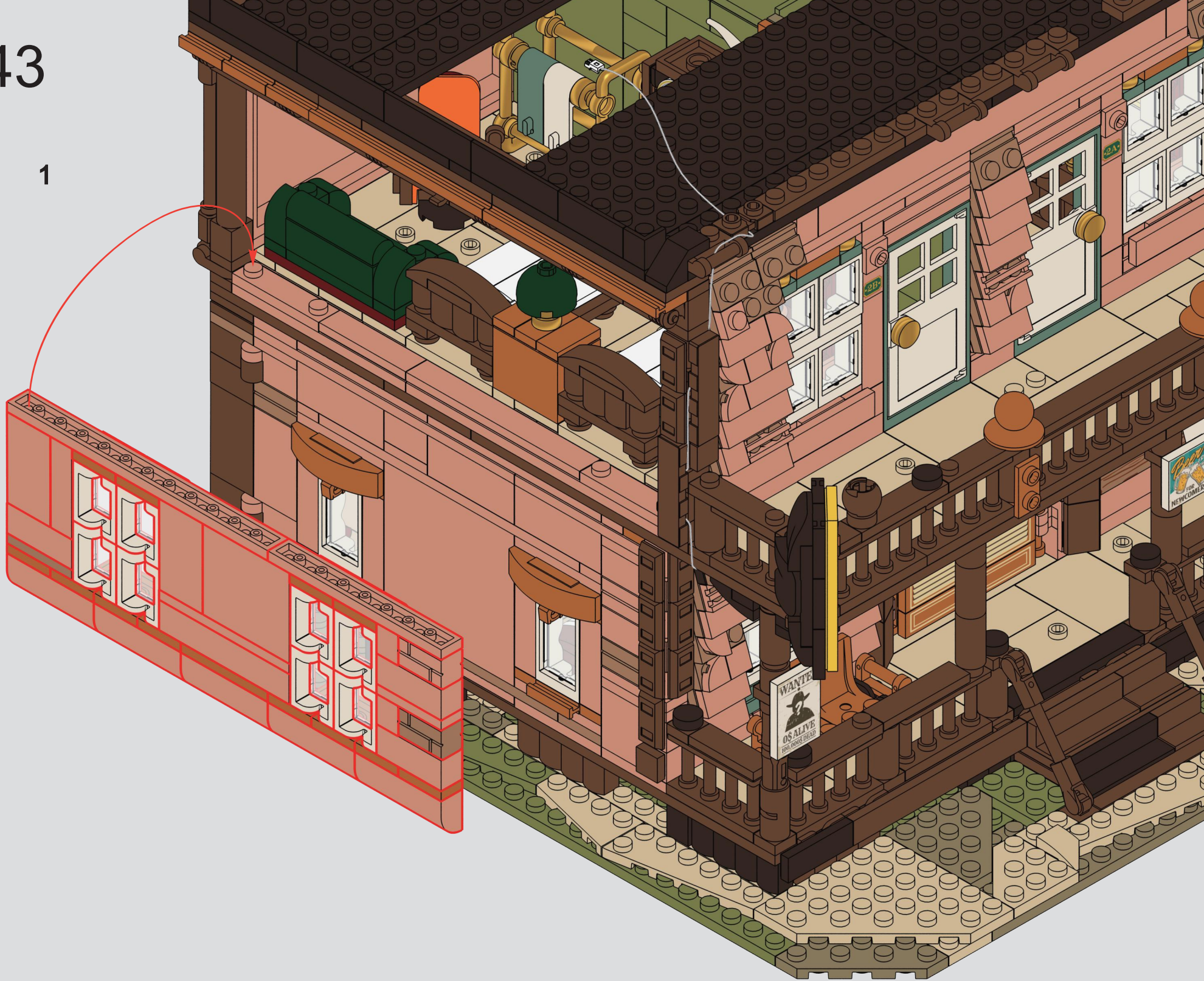

2

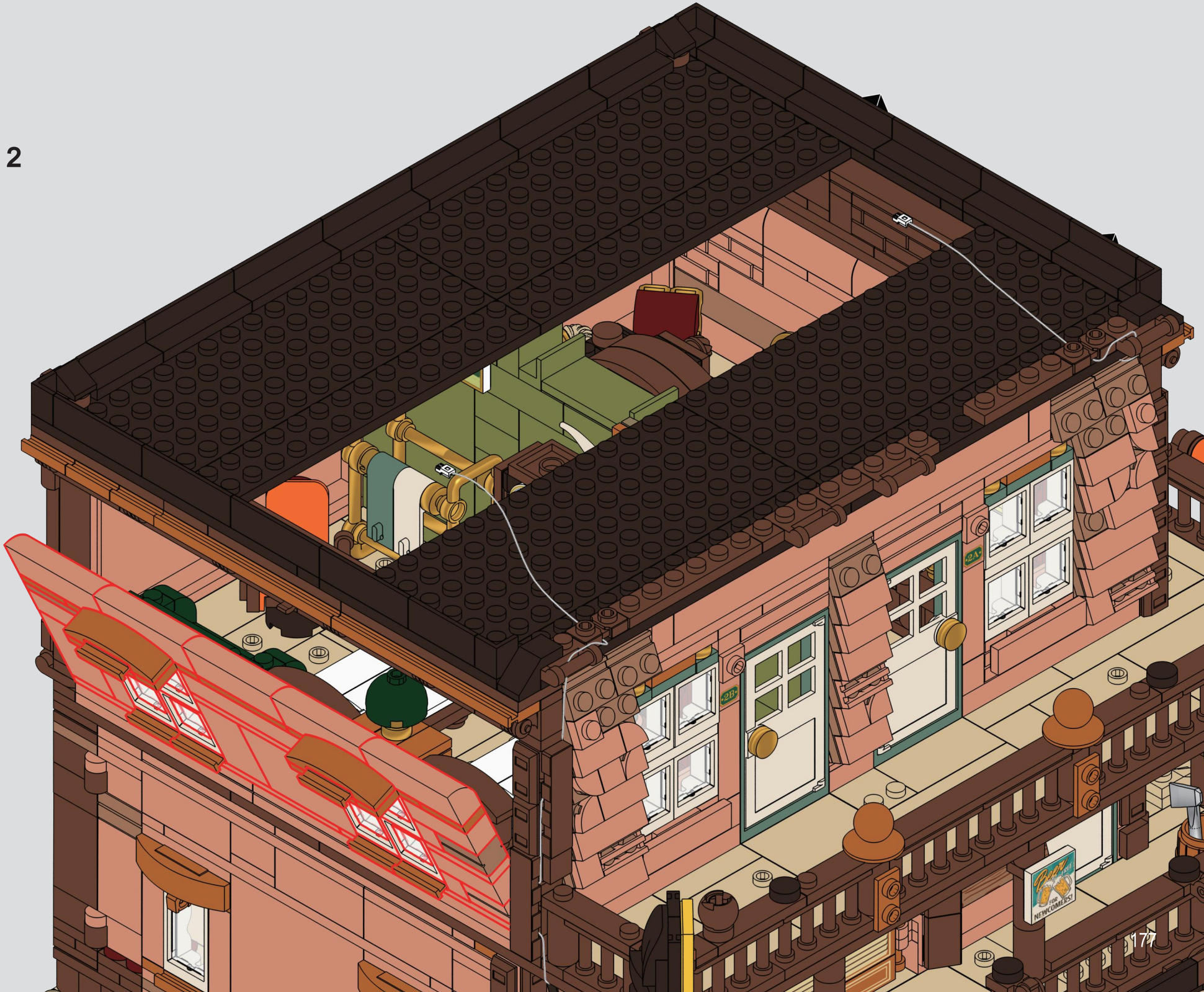

3



244



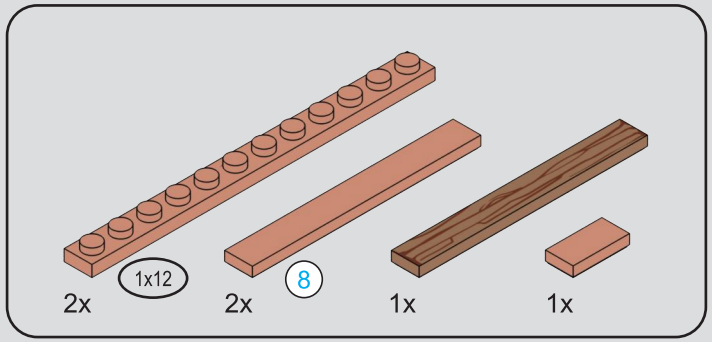



245

1

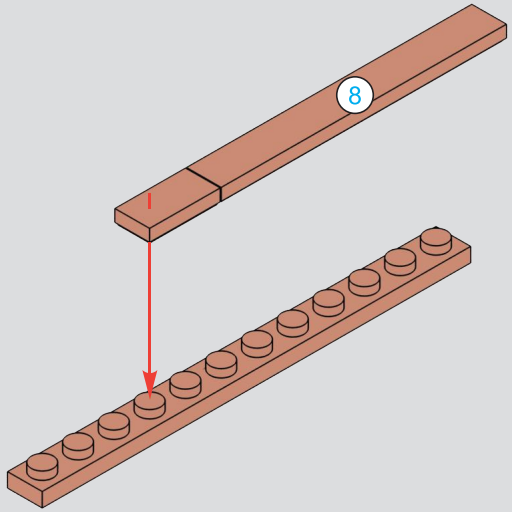

2

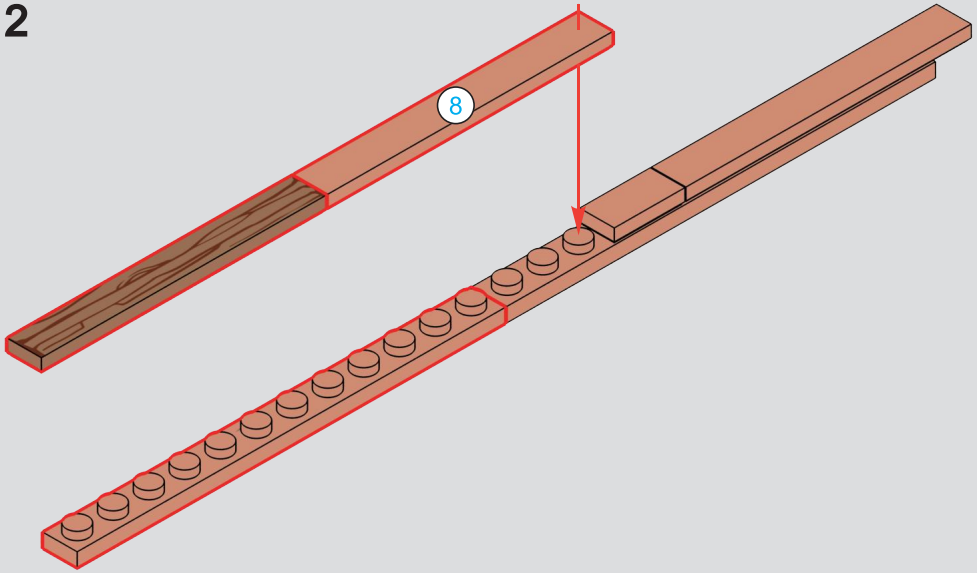

246

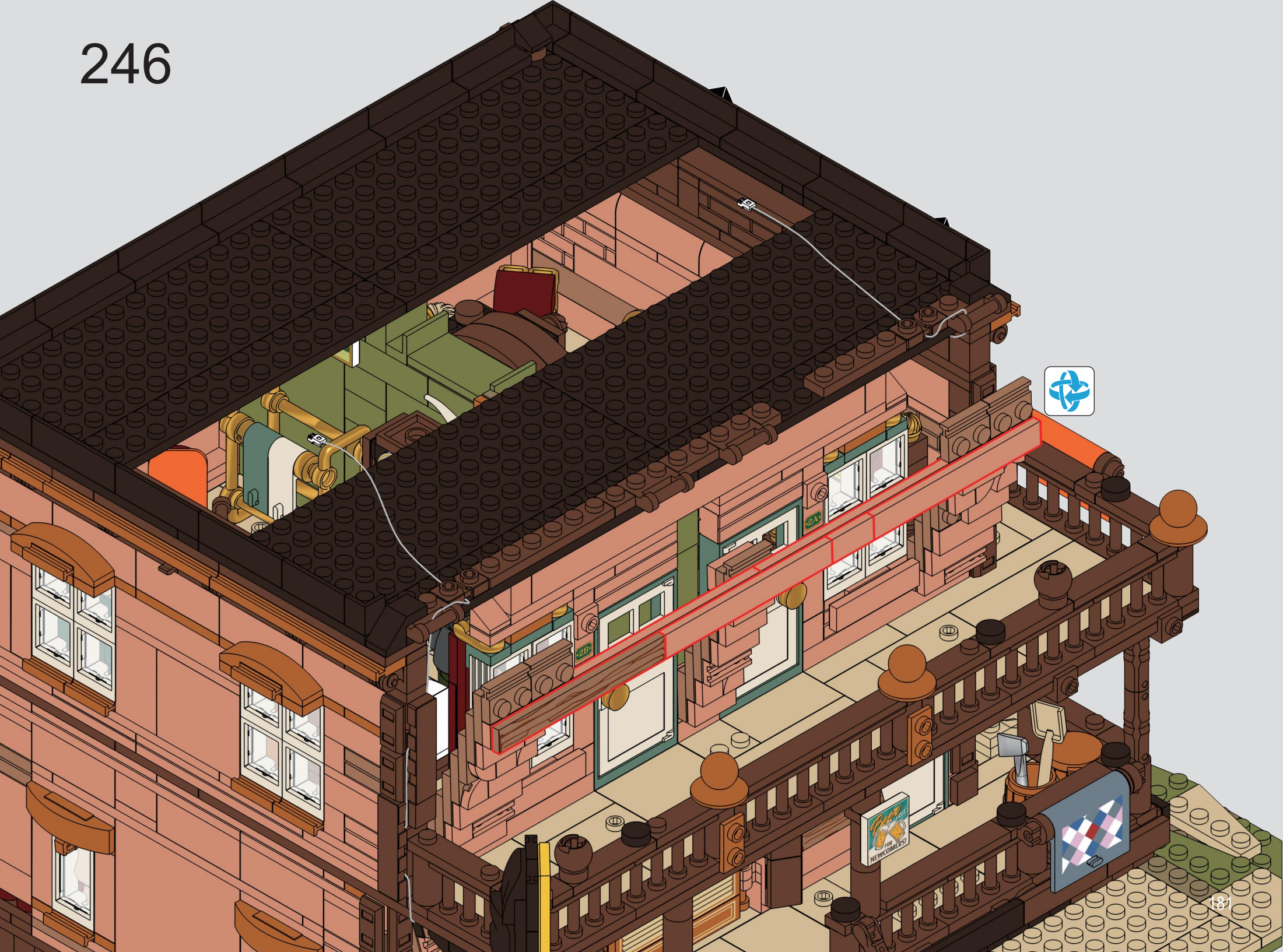

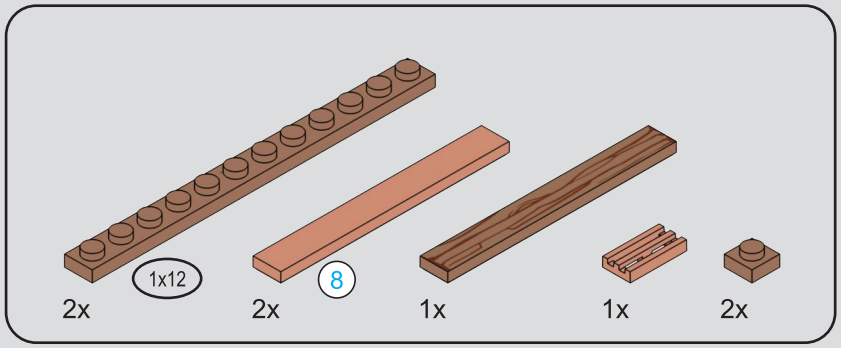

247



1

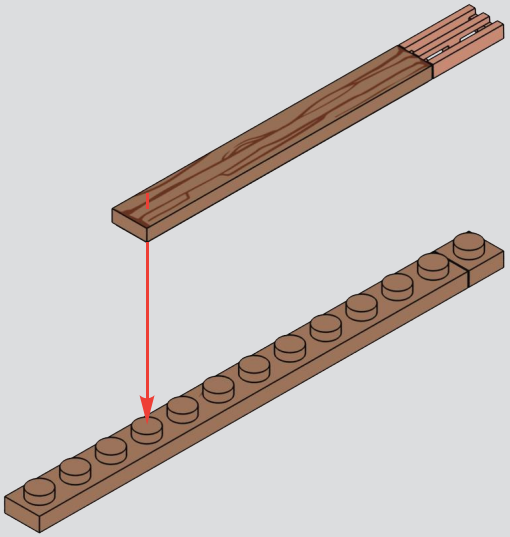

2

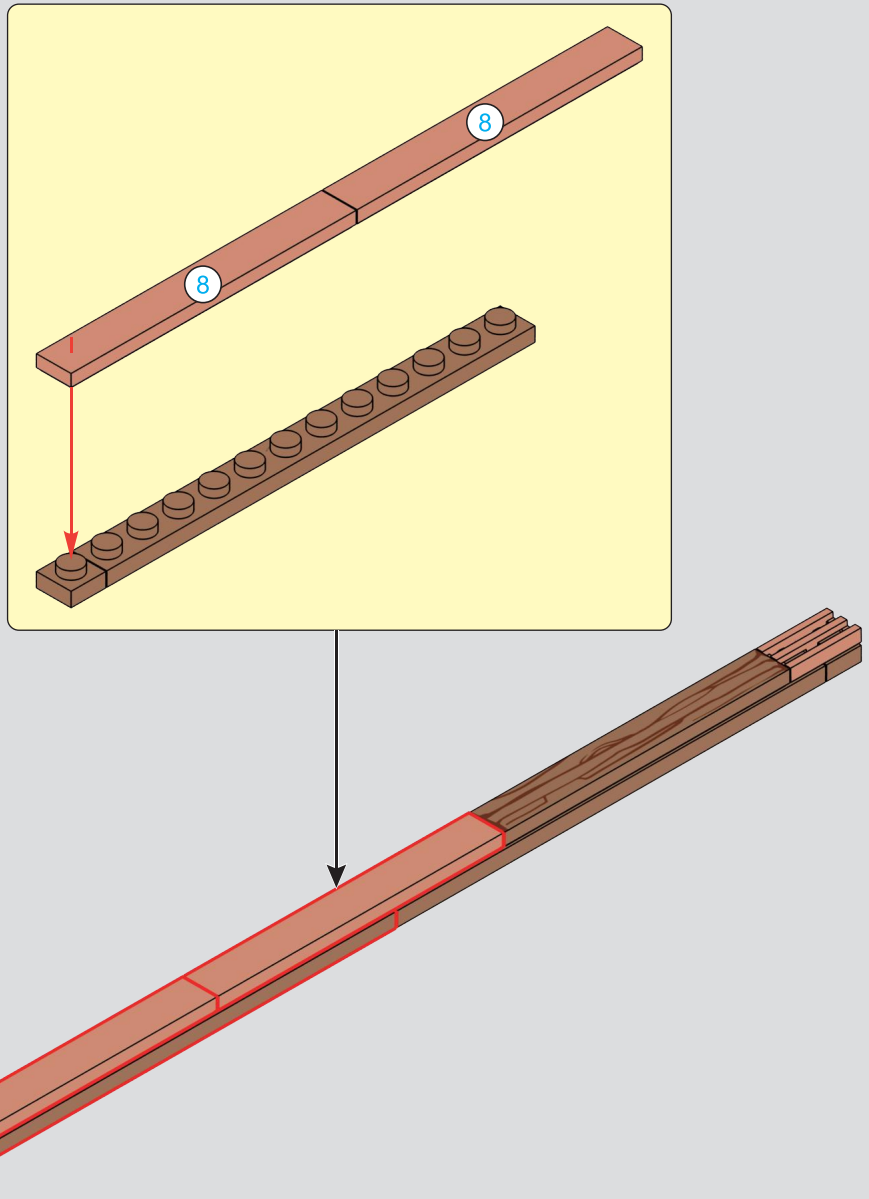

248

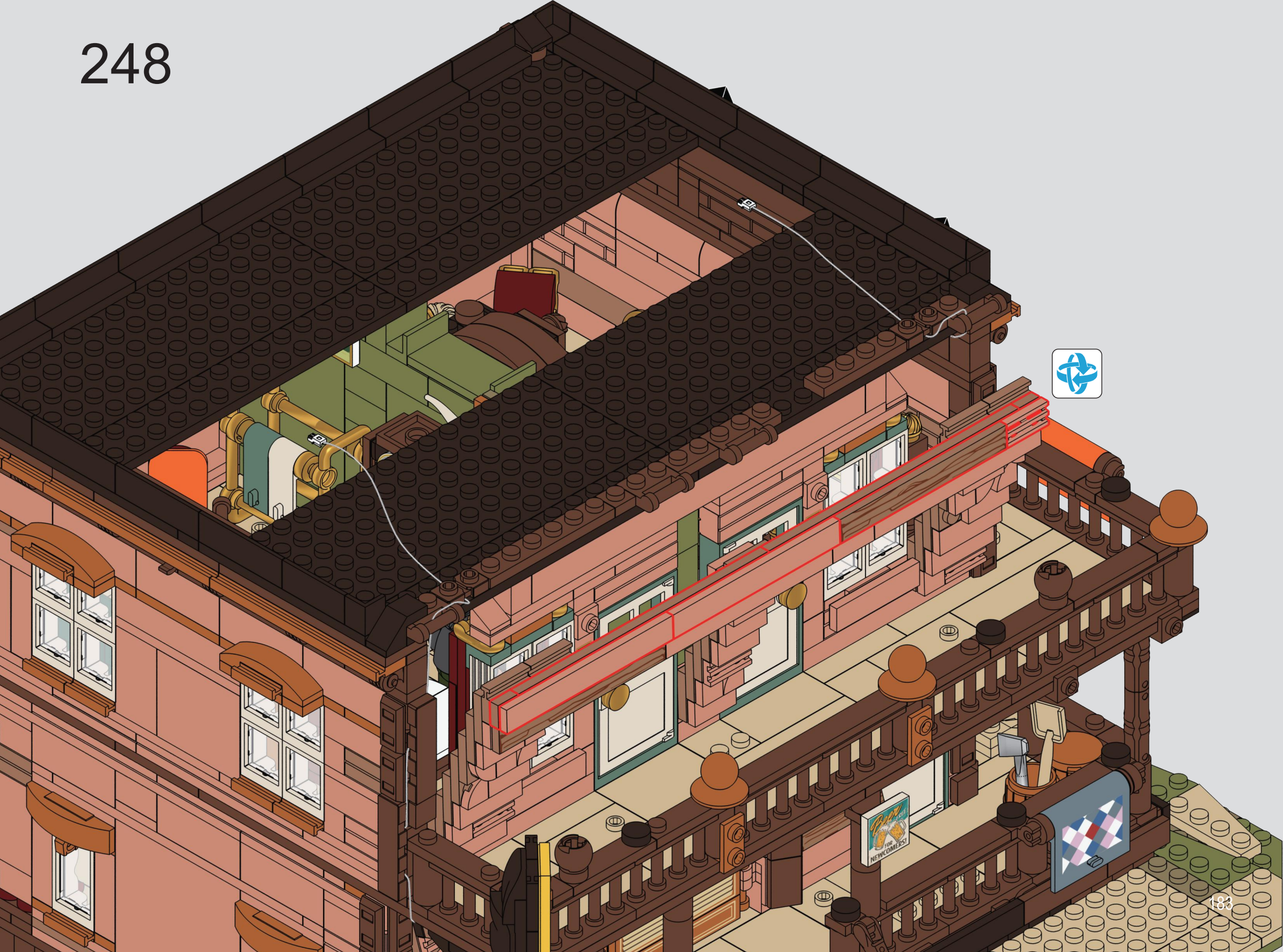

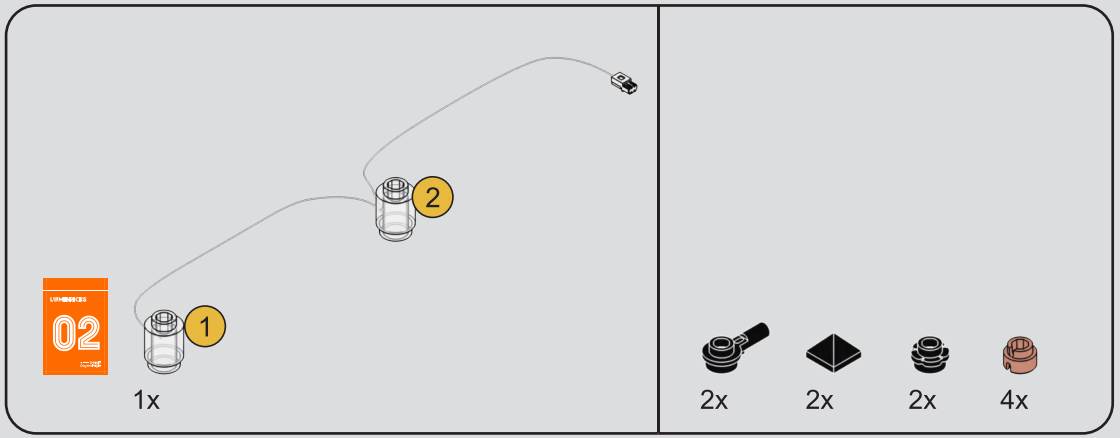

249

1

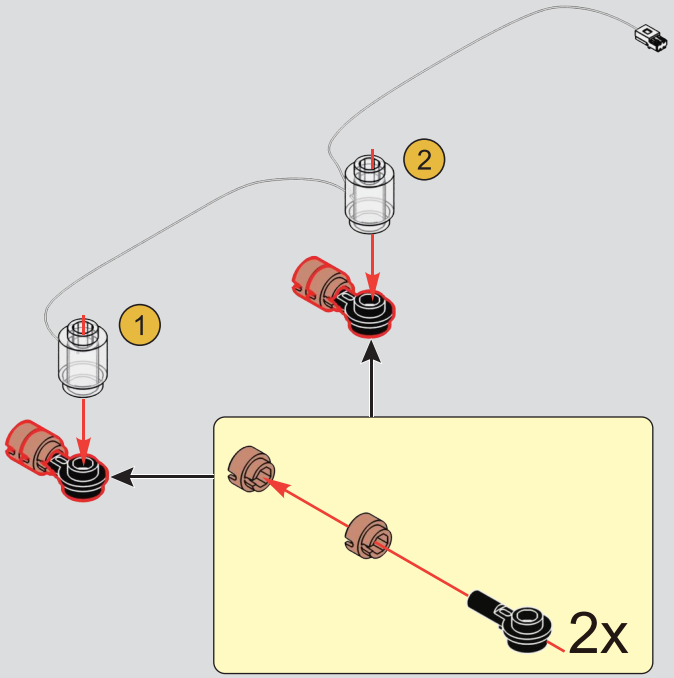

2

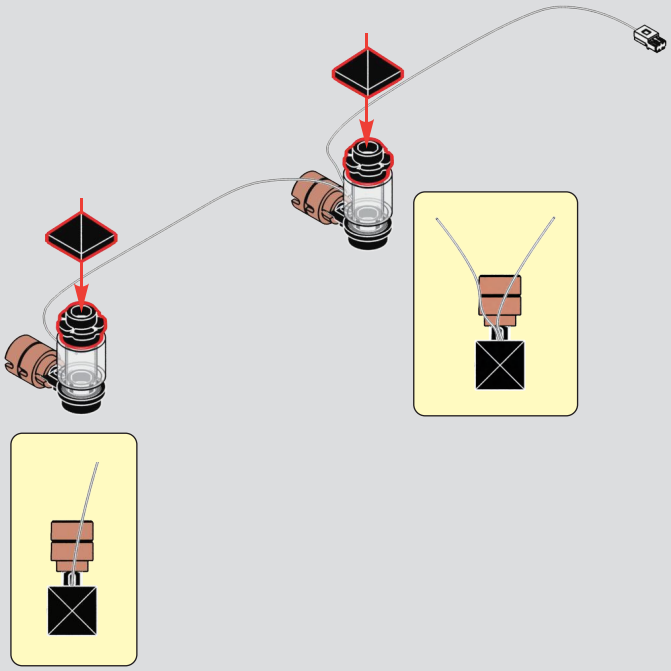

3

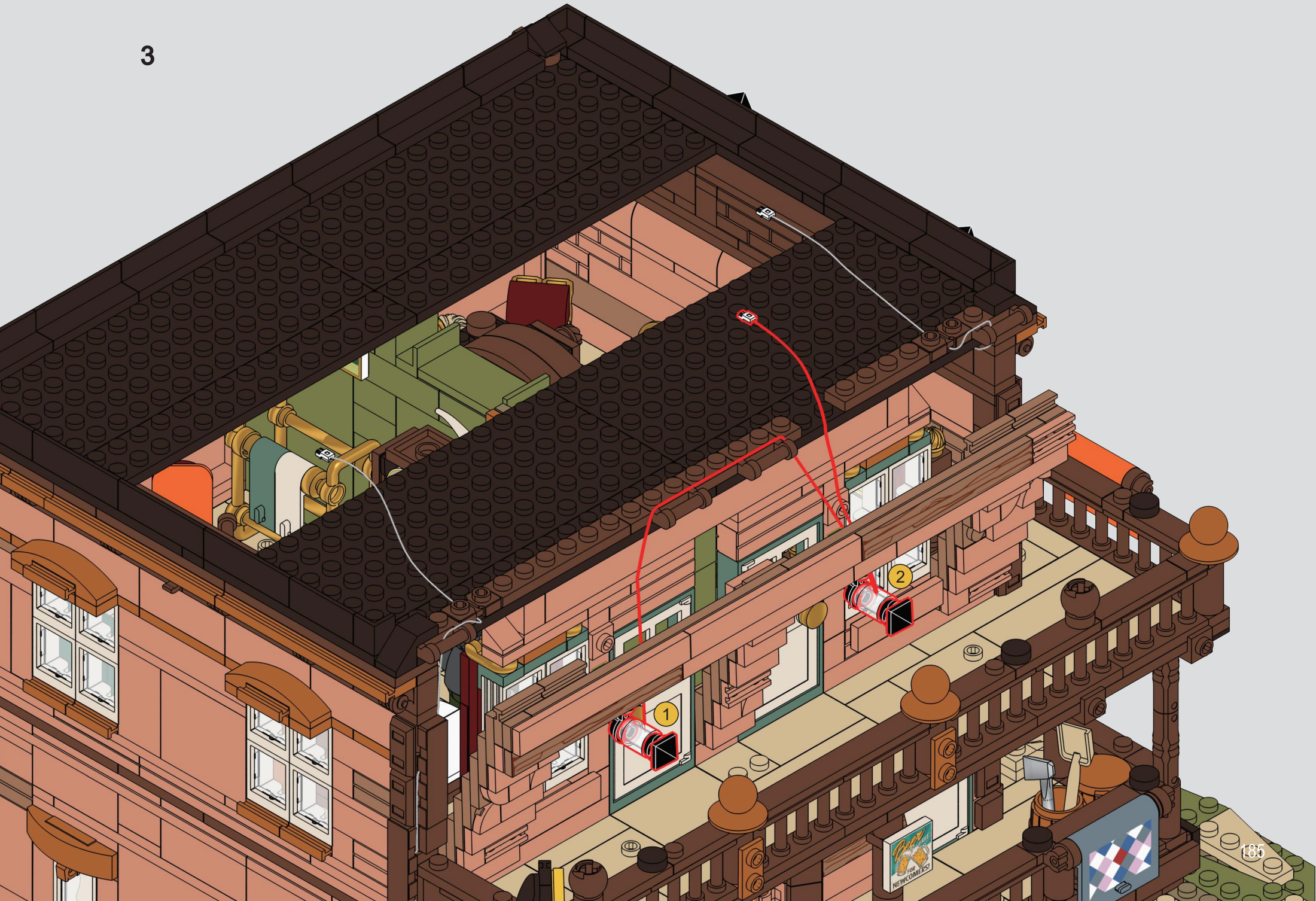

250

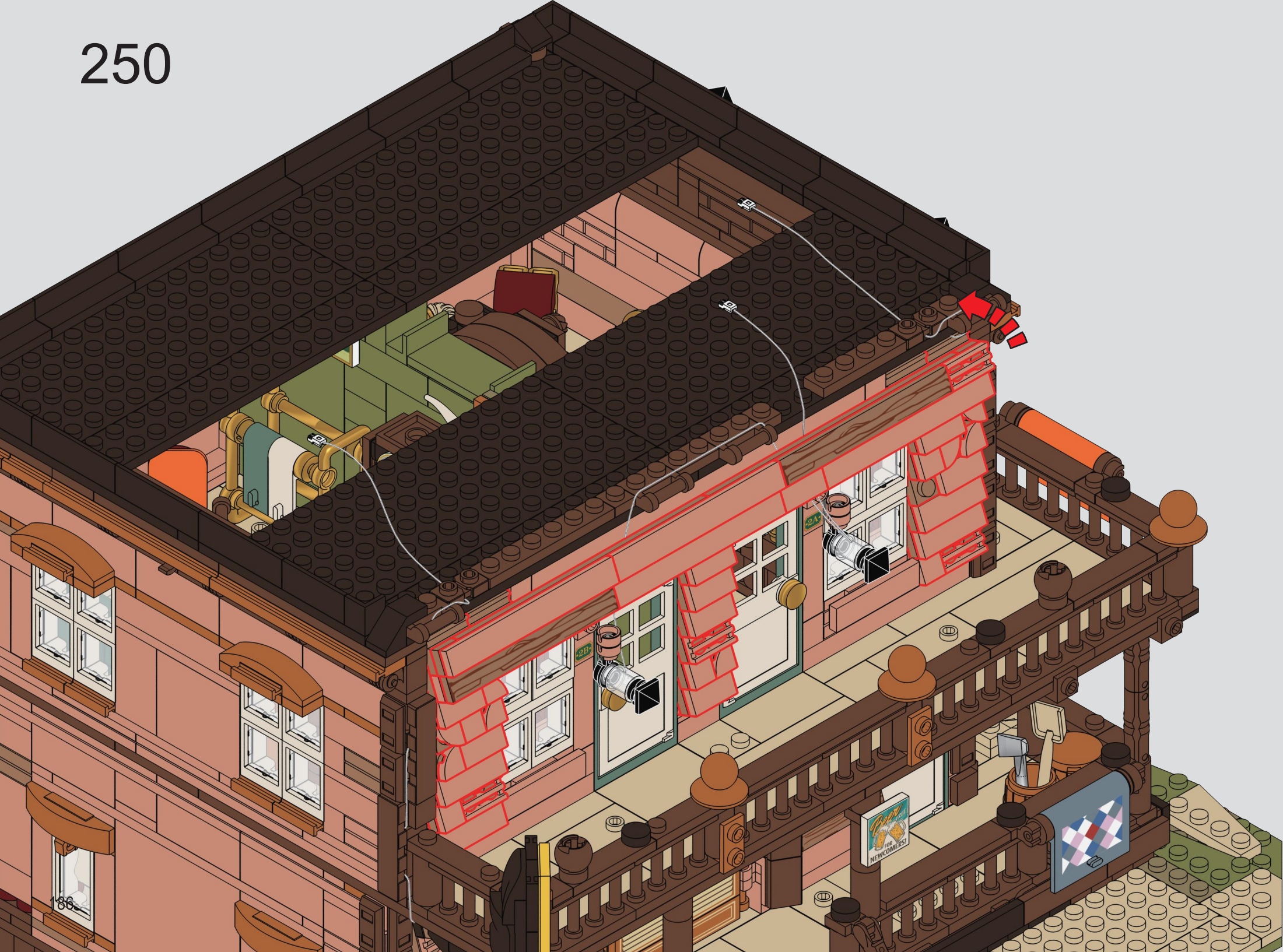


1
2
2x
2ff
FOR NEWCOMERS!

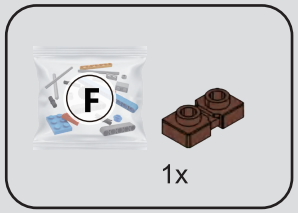

252

1



2

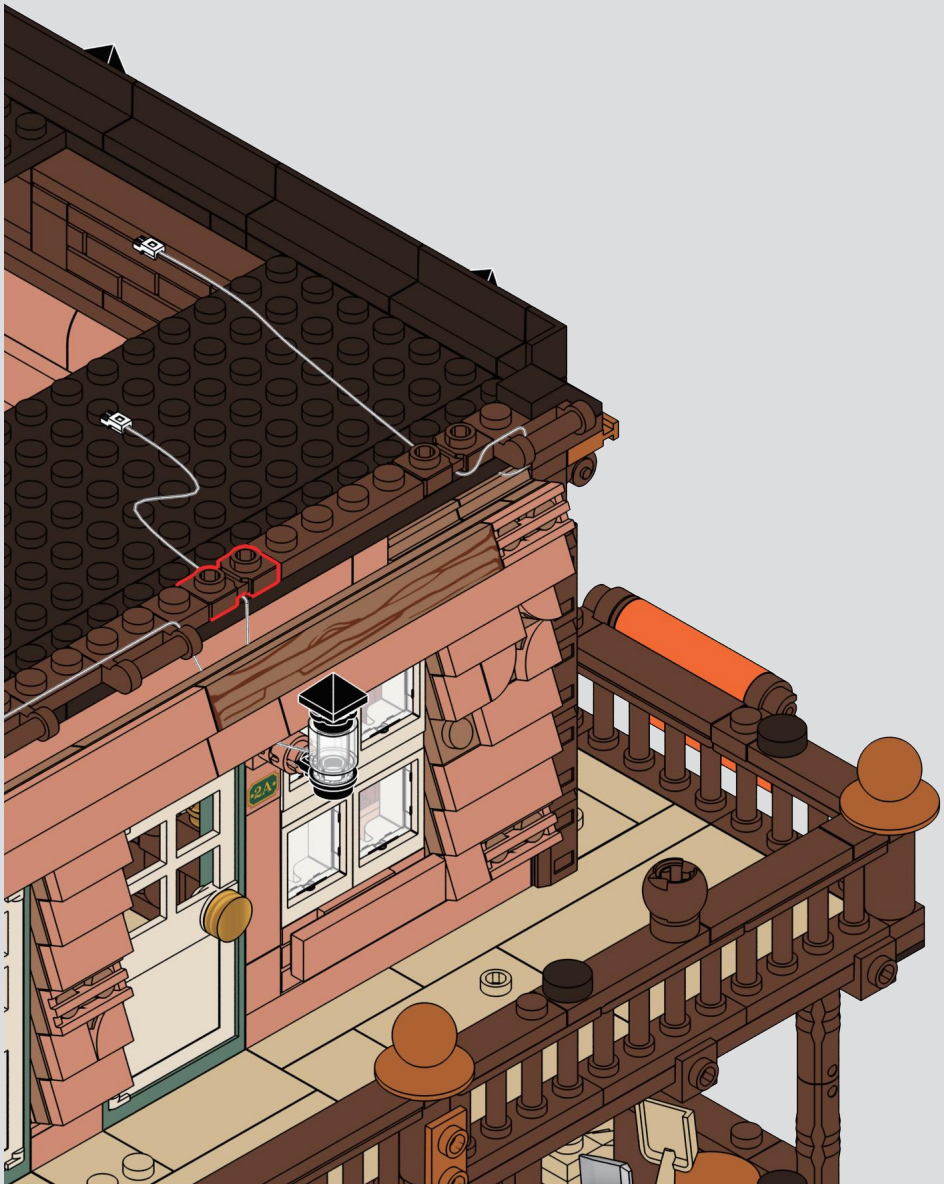

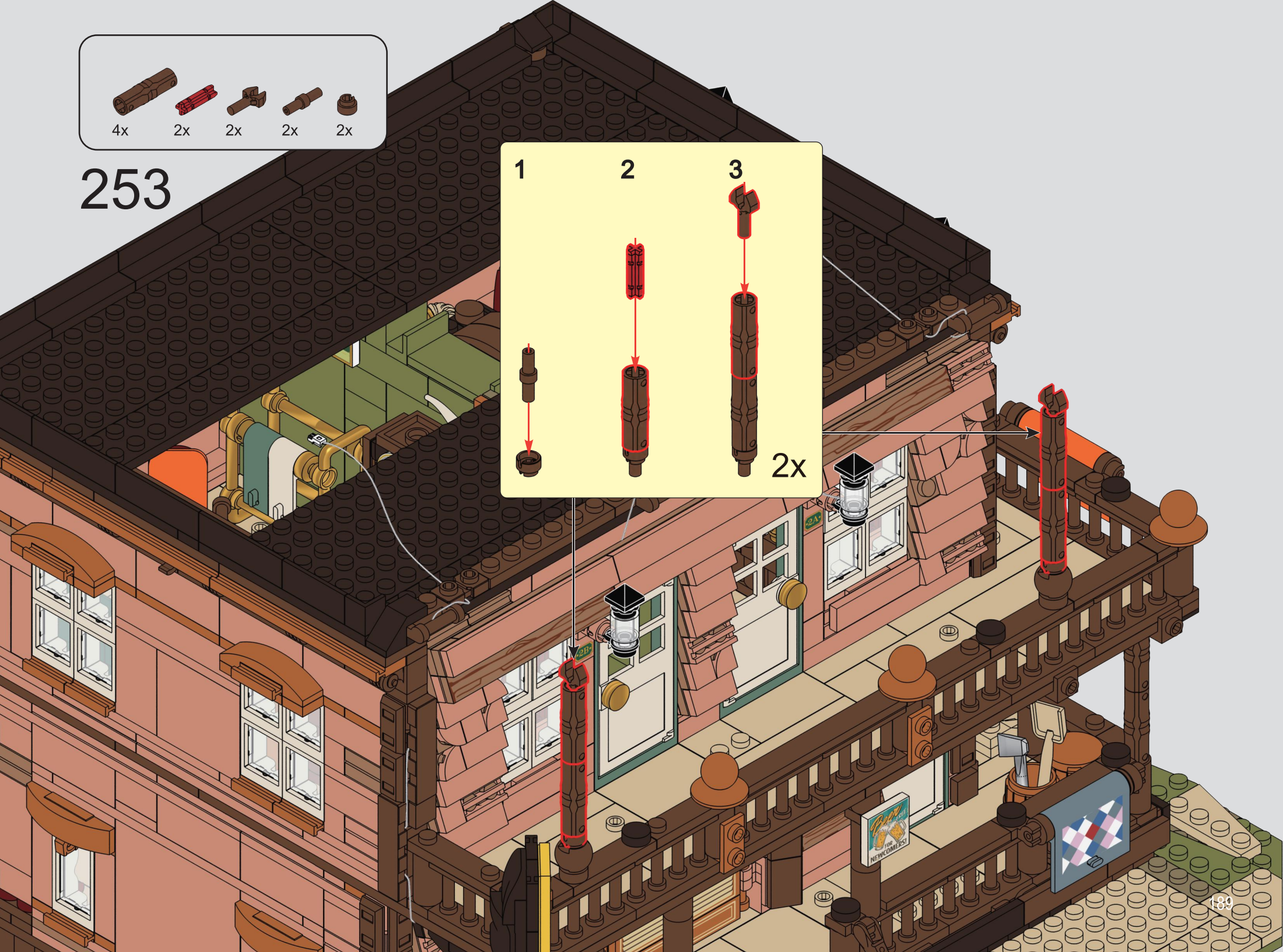
4x
2x
2x
2x
2x
253
1
2
3
2x

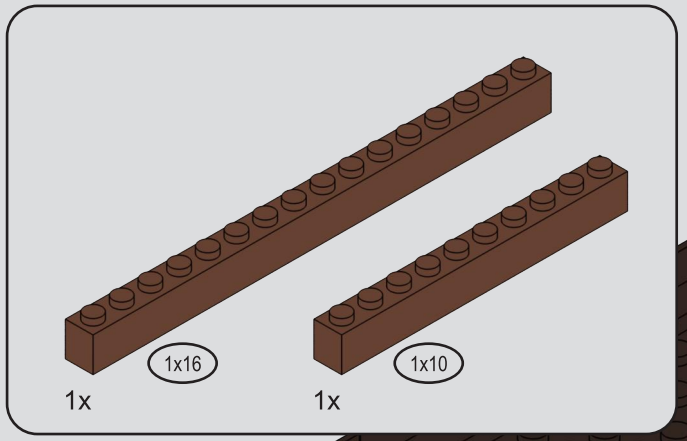

254

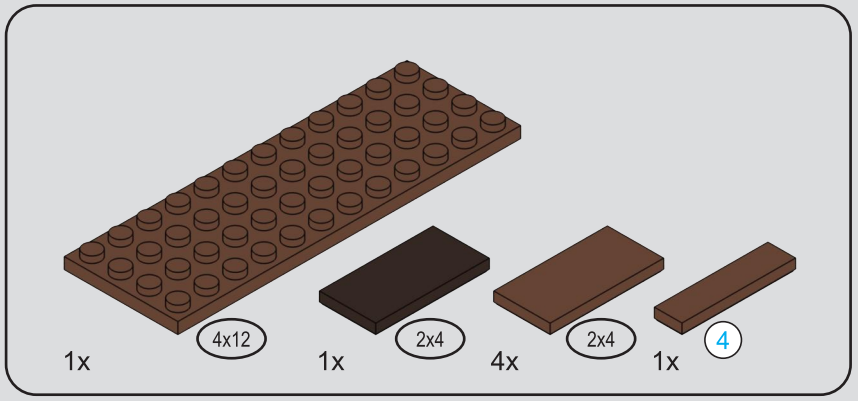

255

1

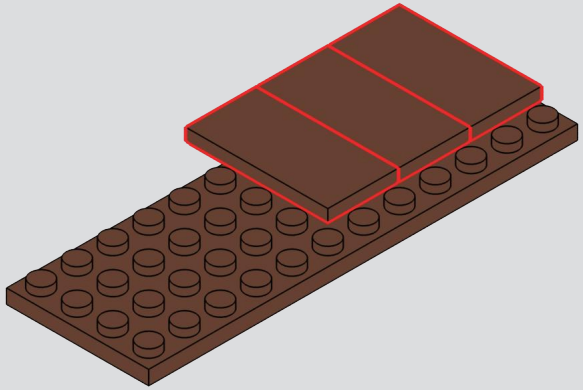

2

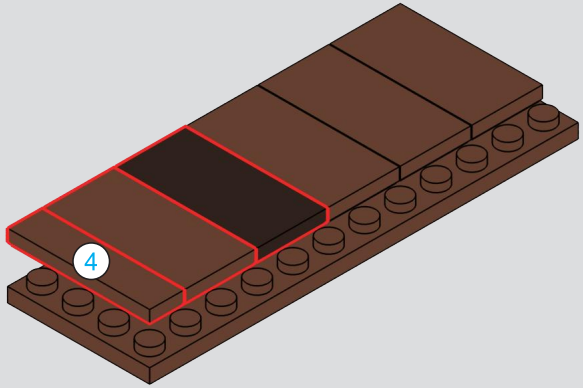



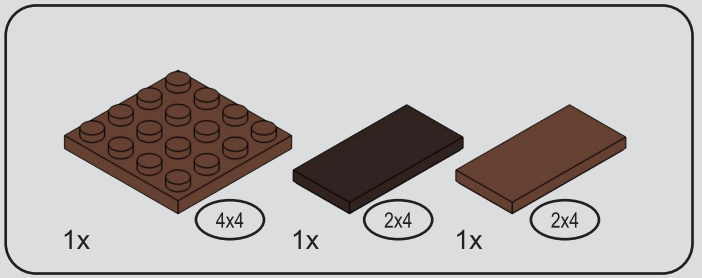

256

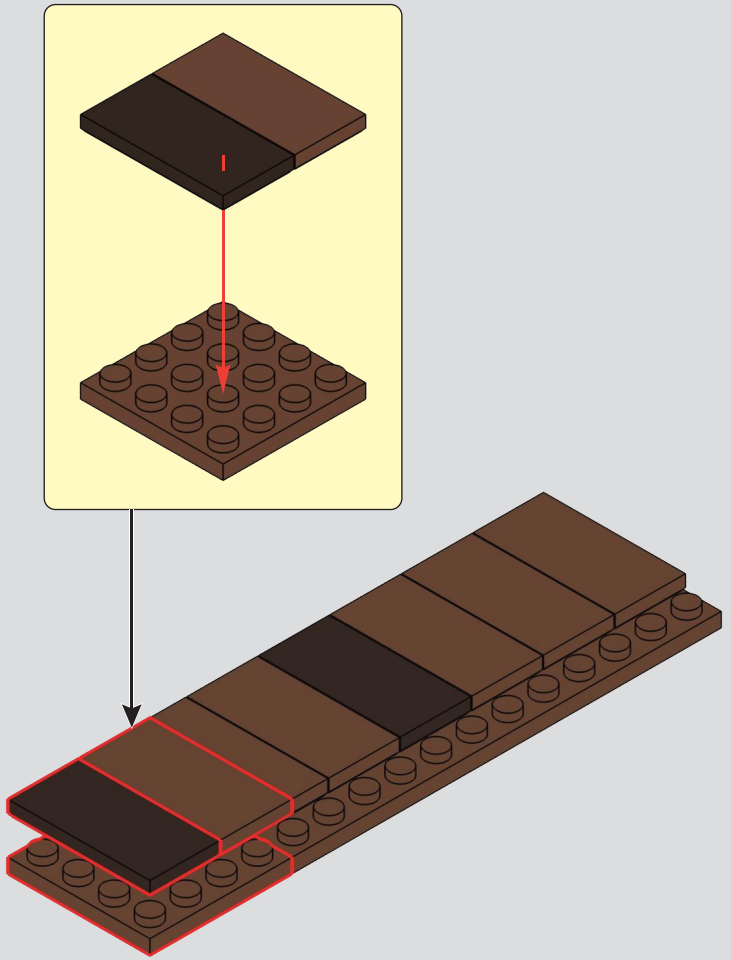

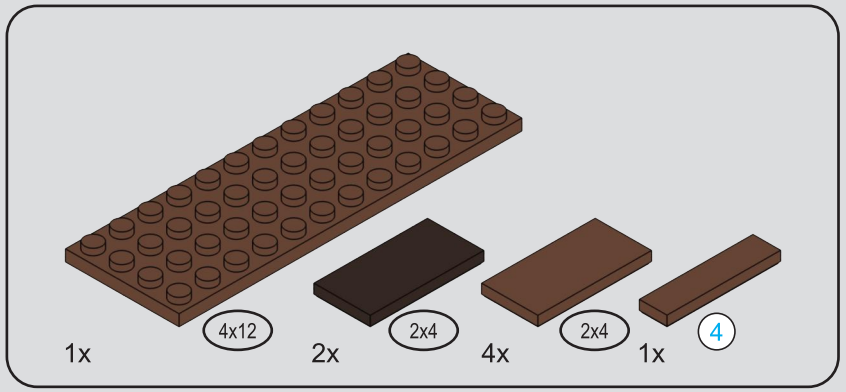



257

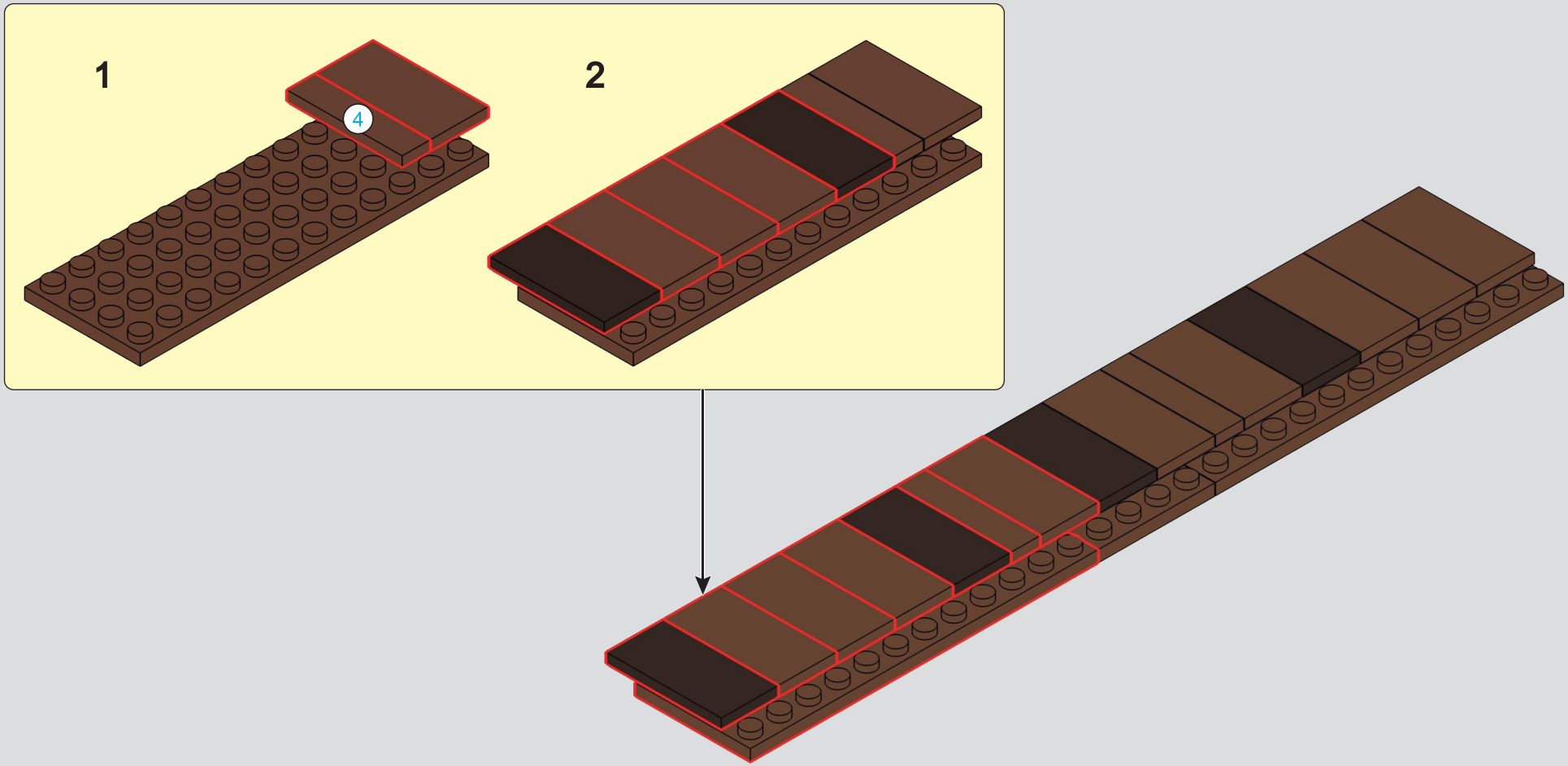

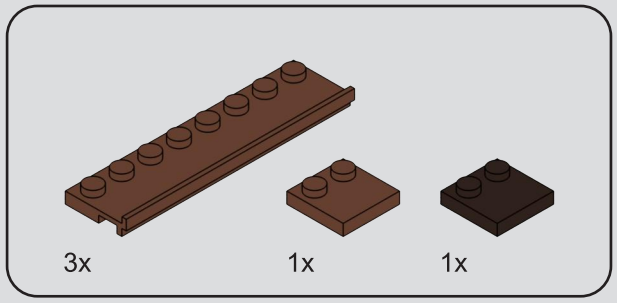

258

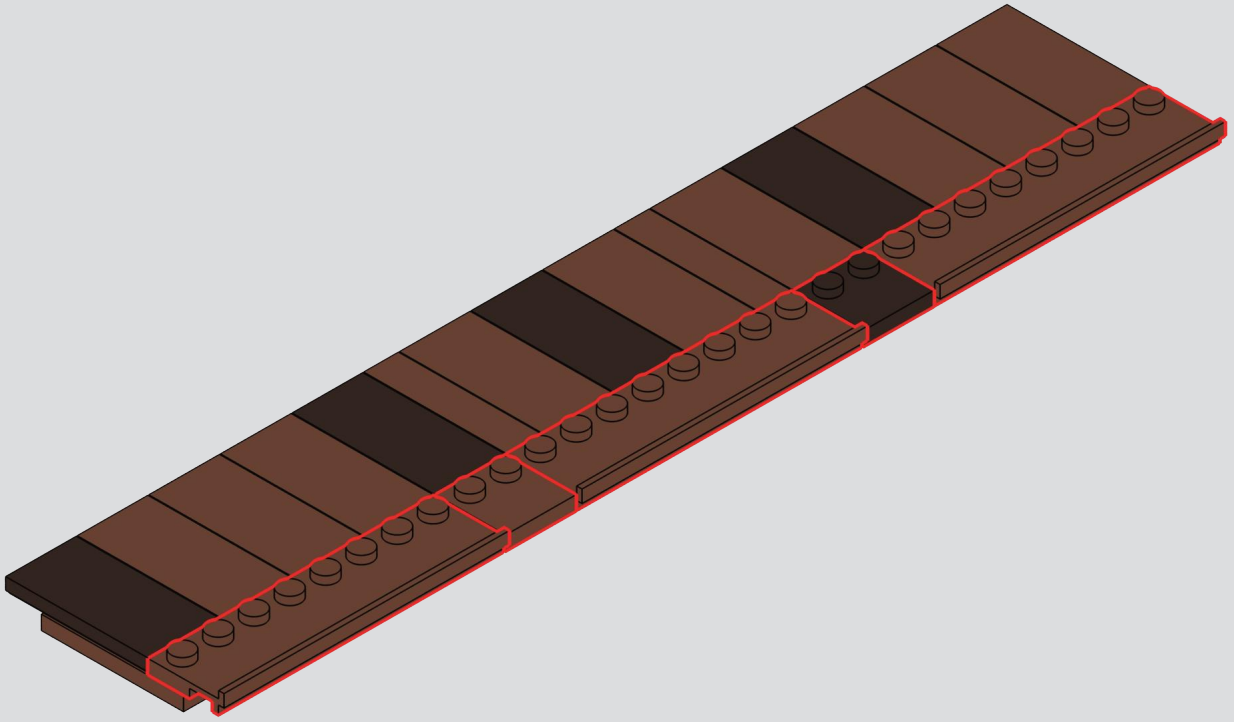

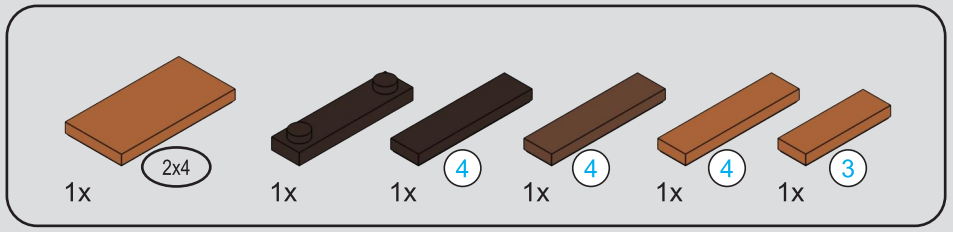



259

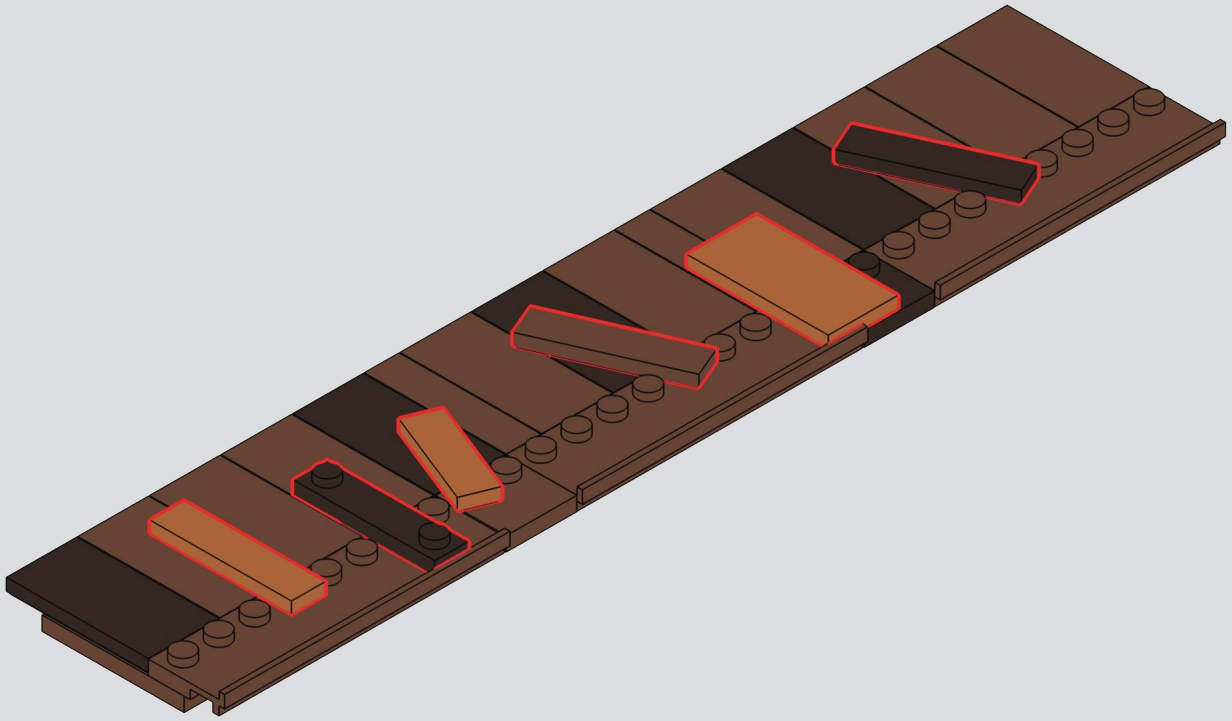

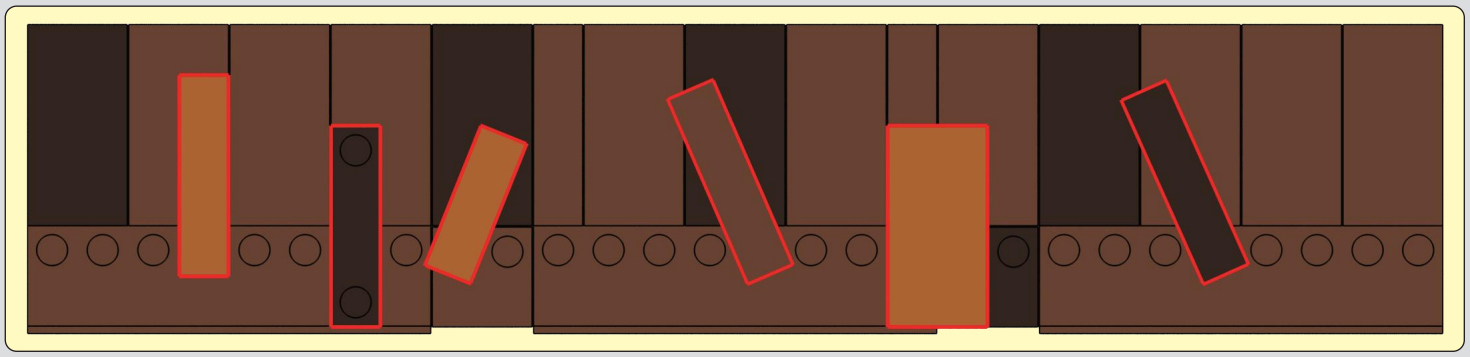

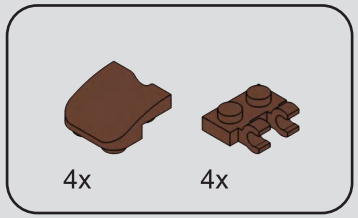

260

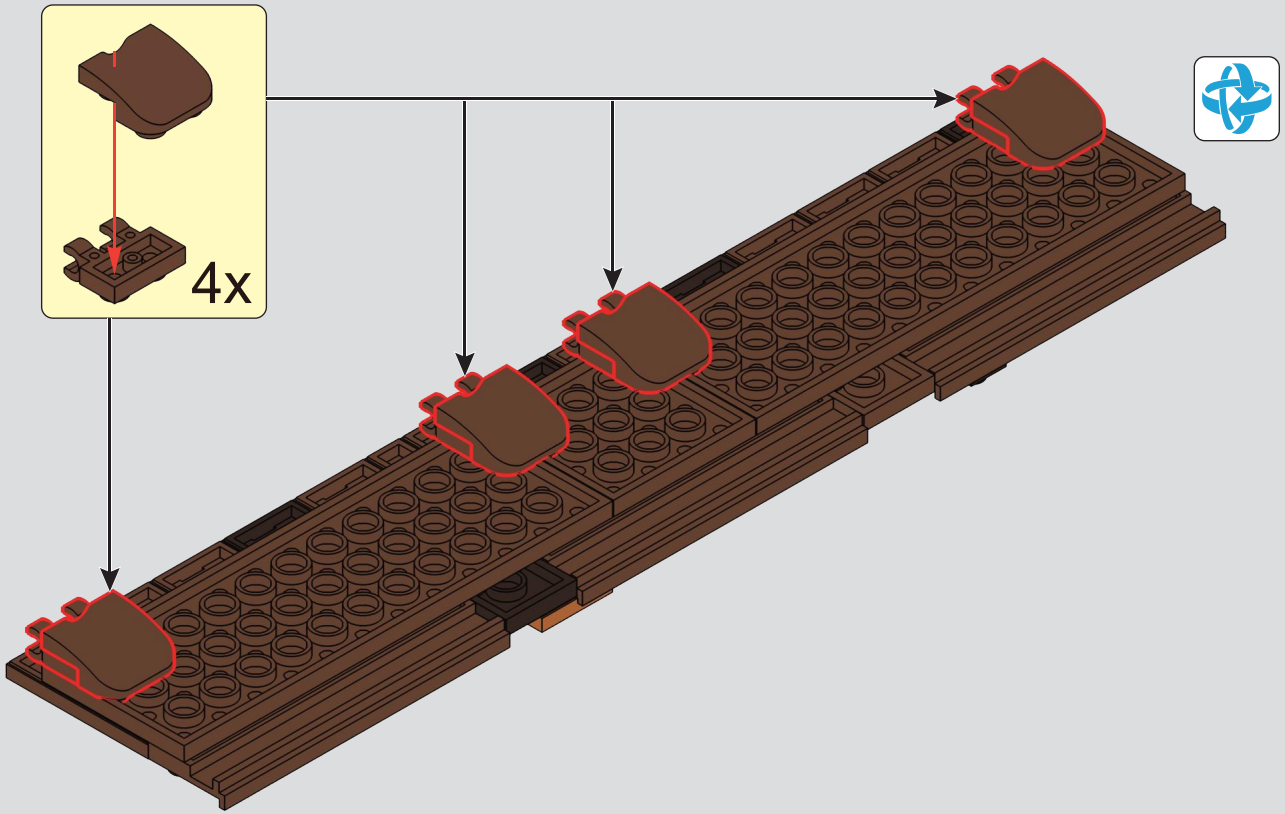

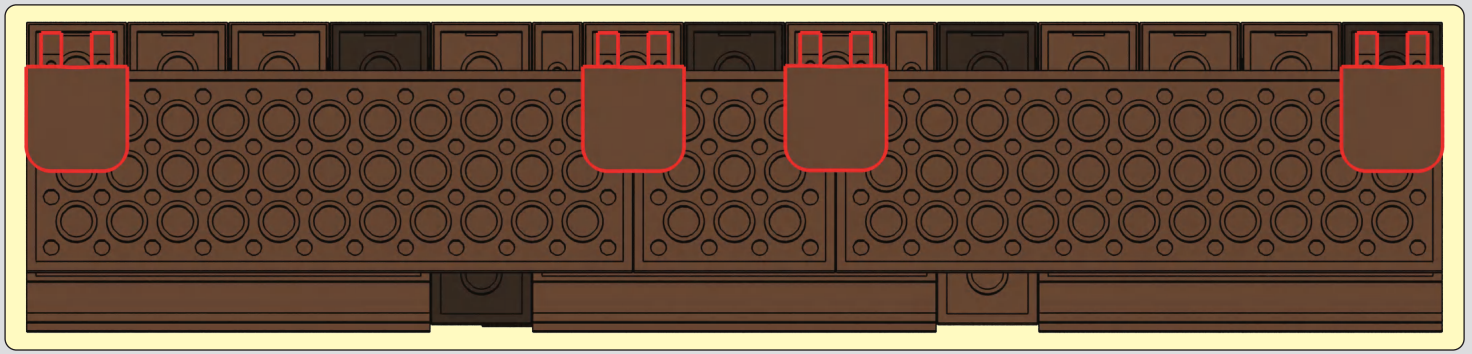

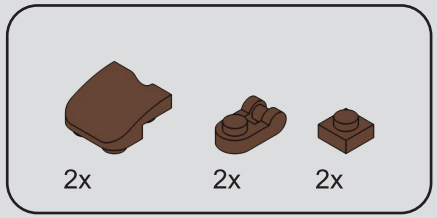

261

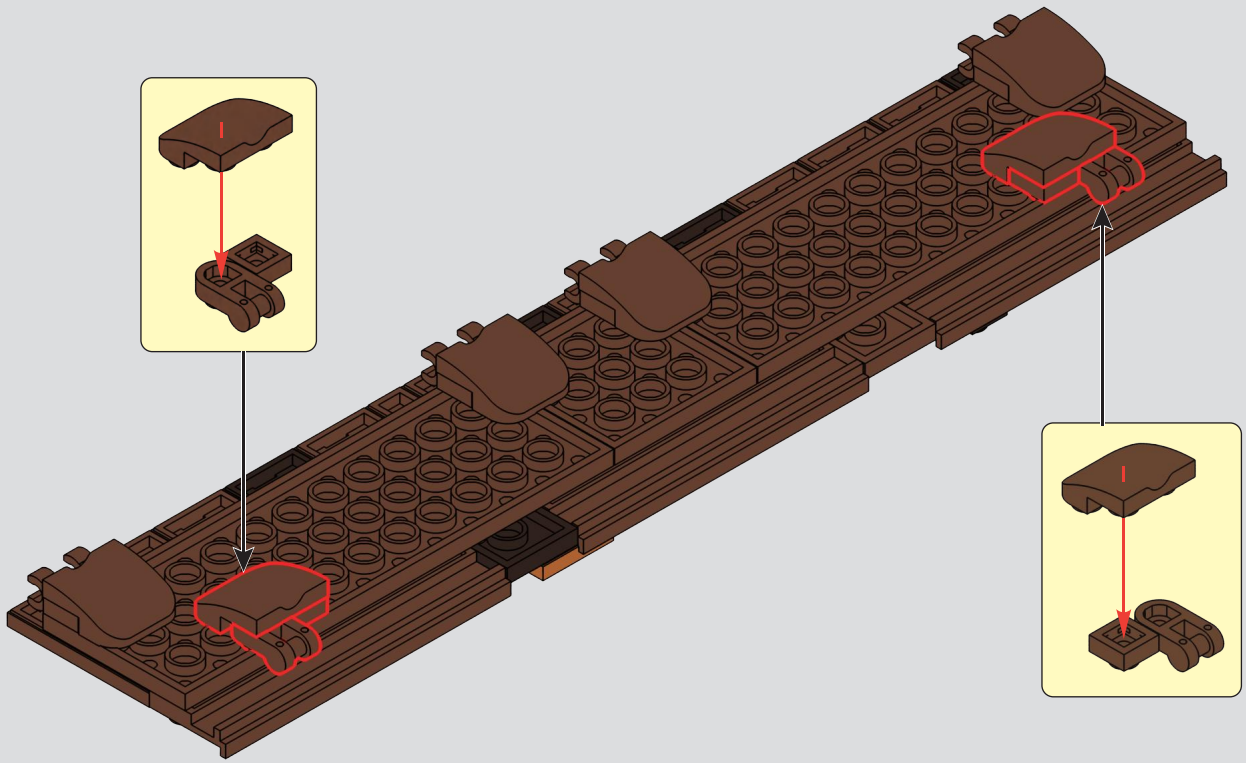

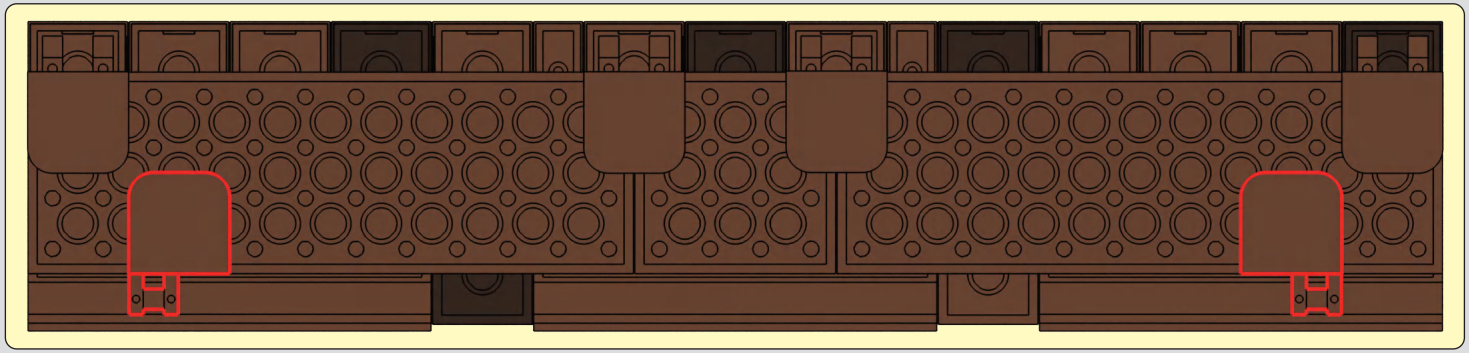

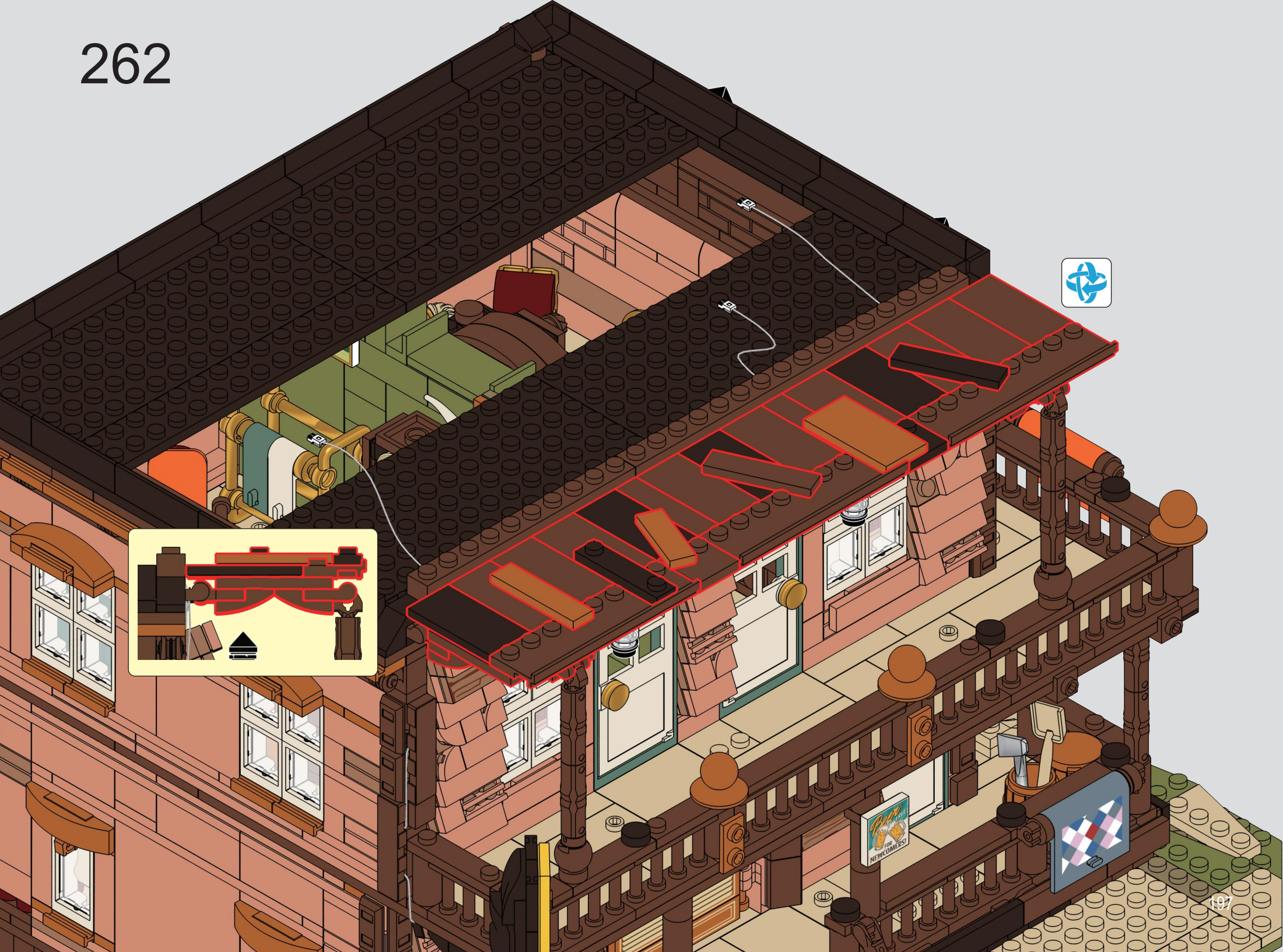

263

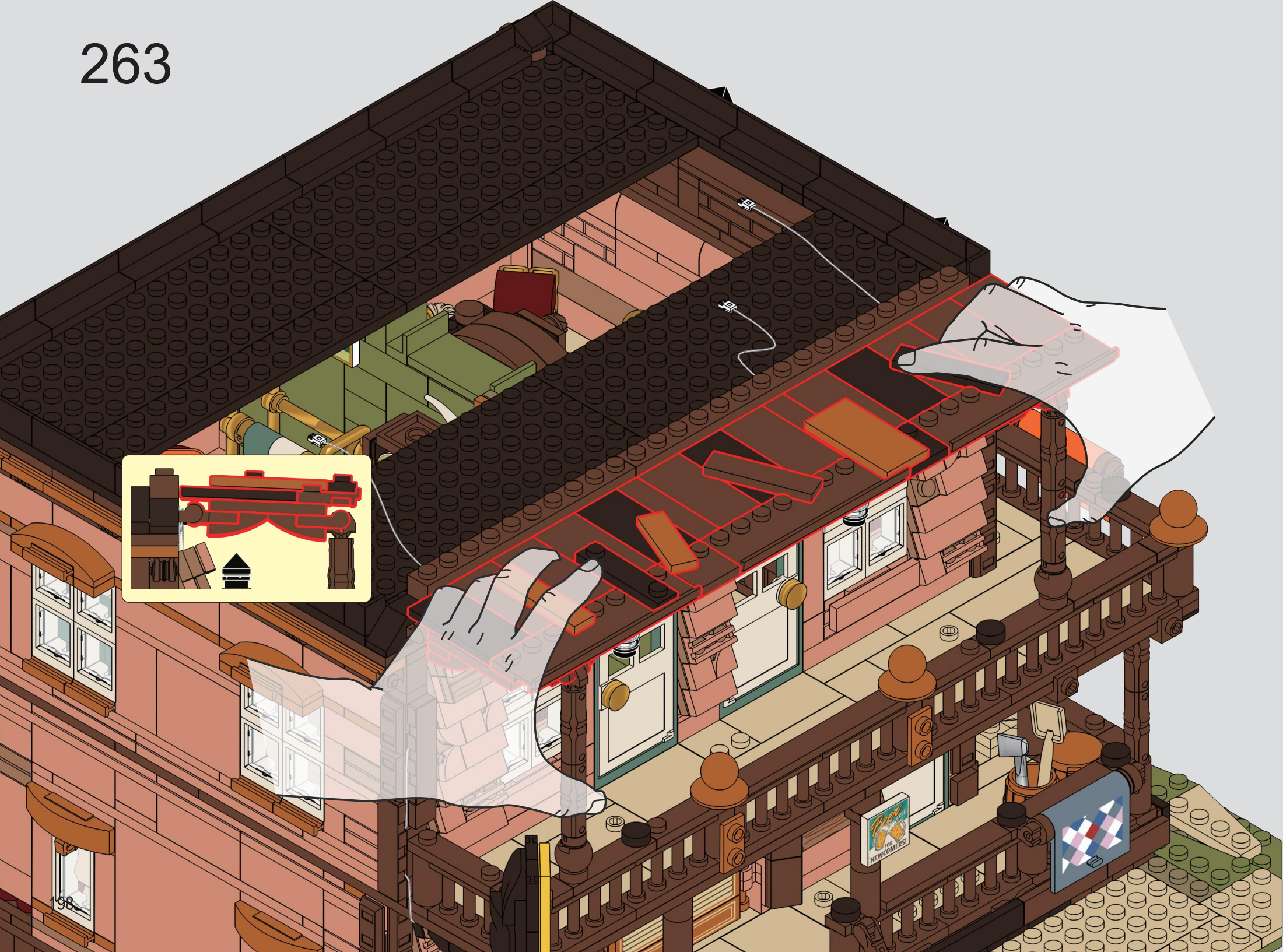


13
F
S
LUMIBRICKS
02

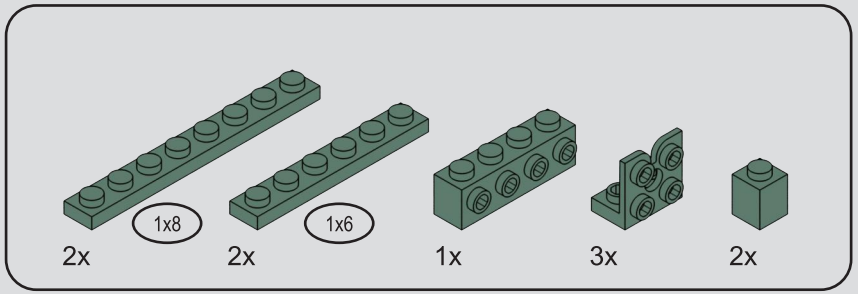

264

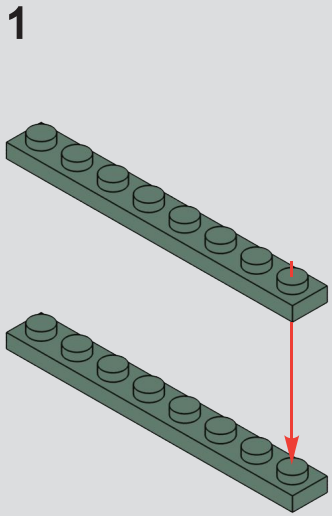

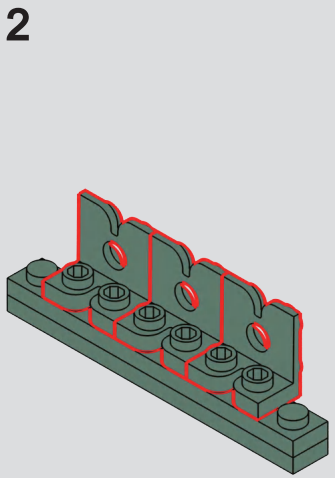

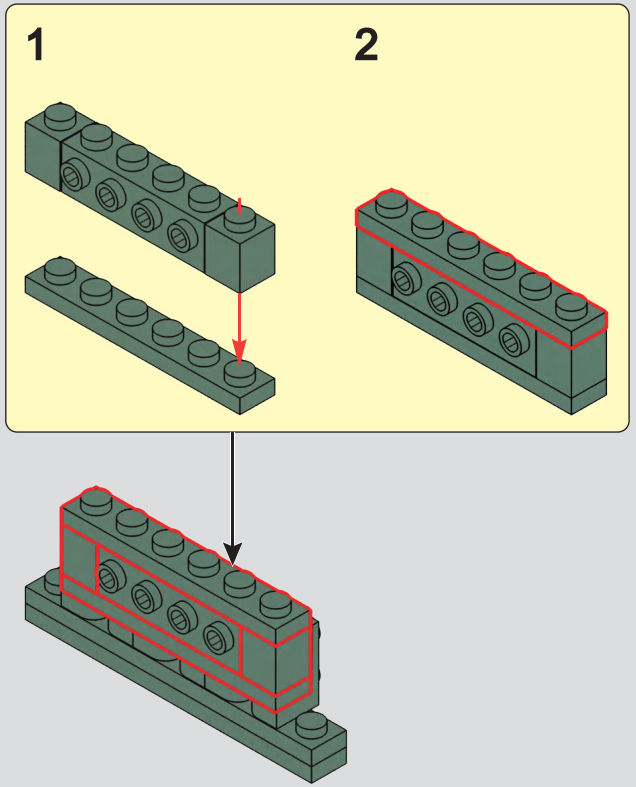

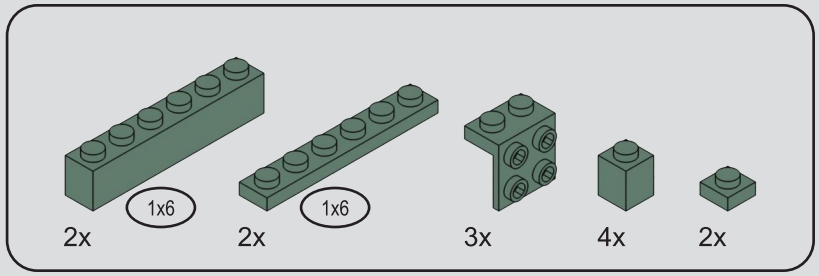

265

1

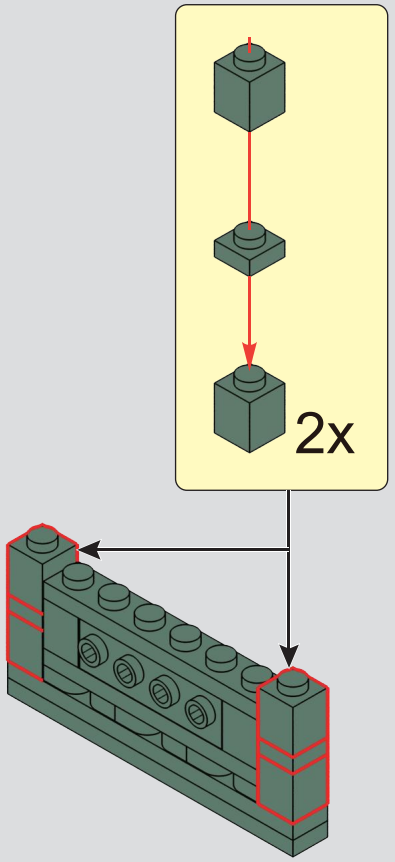

2

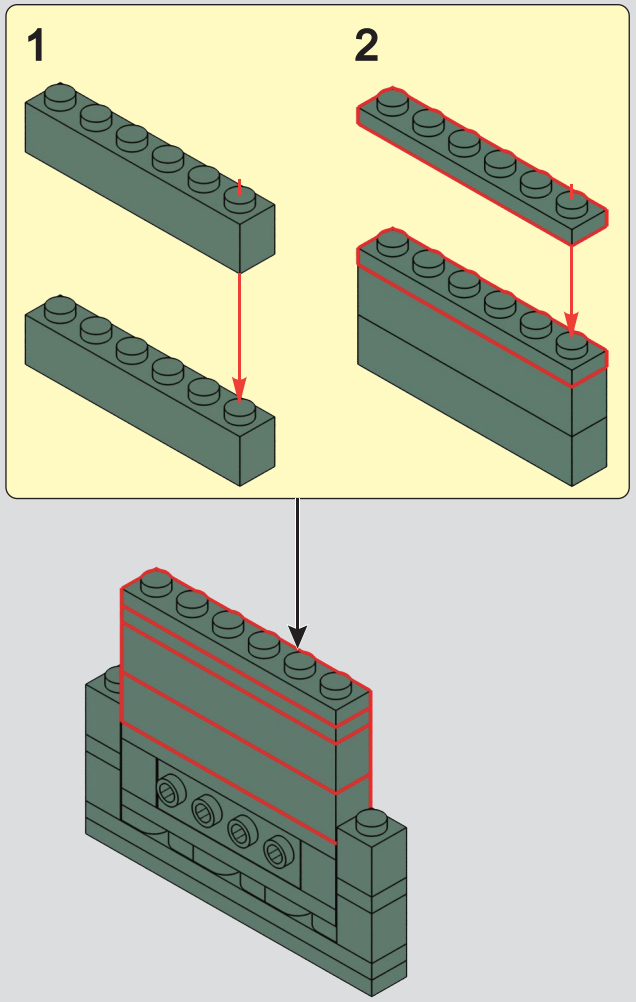

3

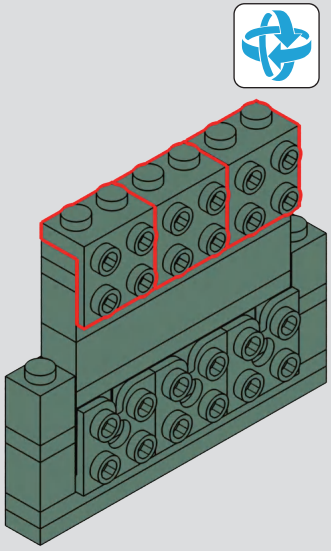

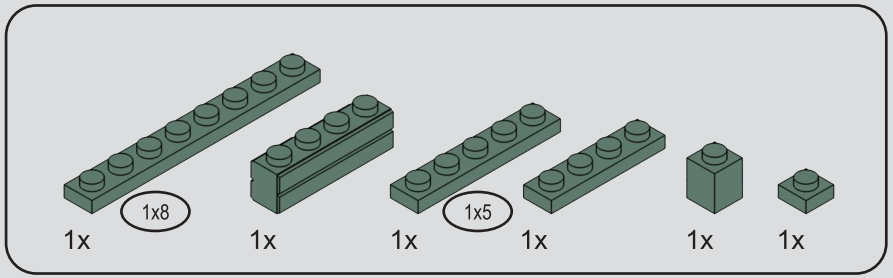

266

1

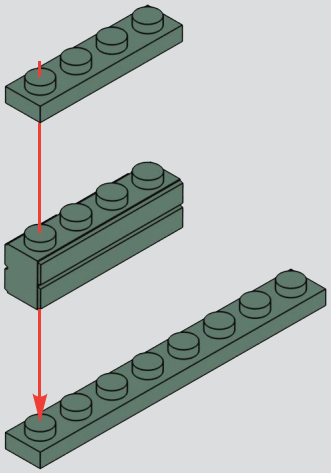

2

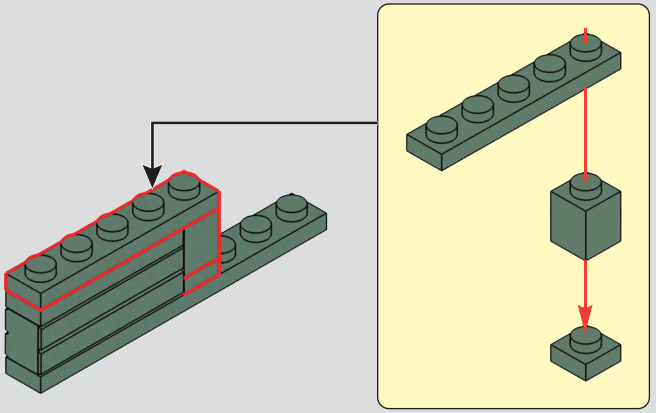

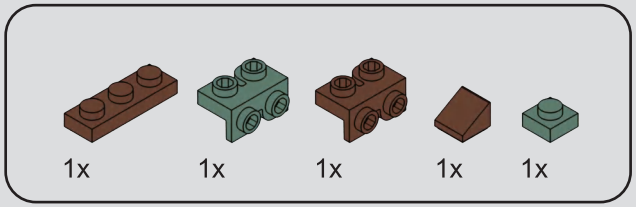

267

1

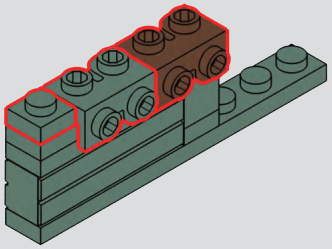

2

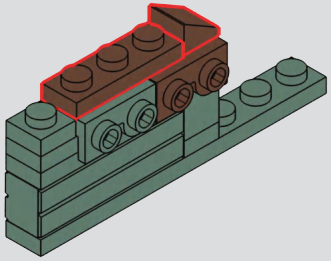

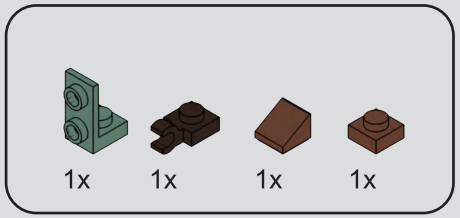

268

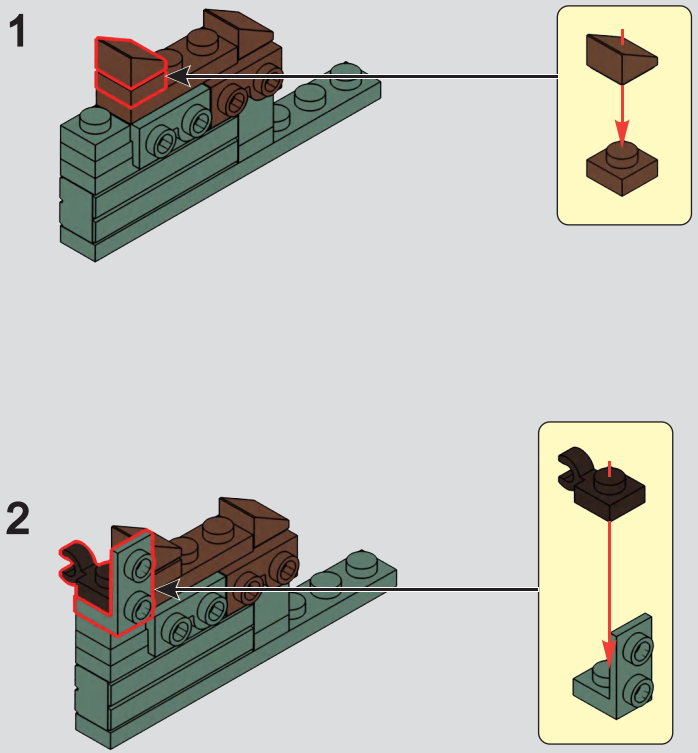

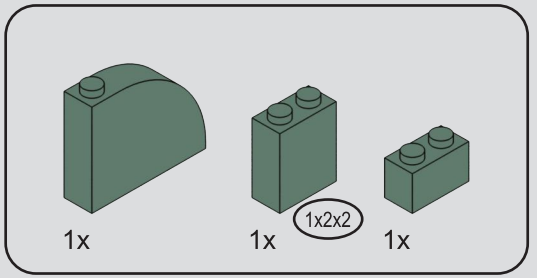

269

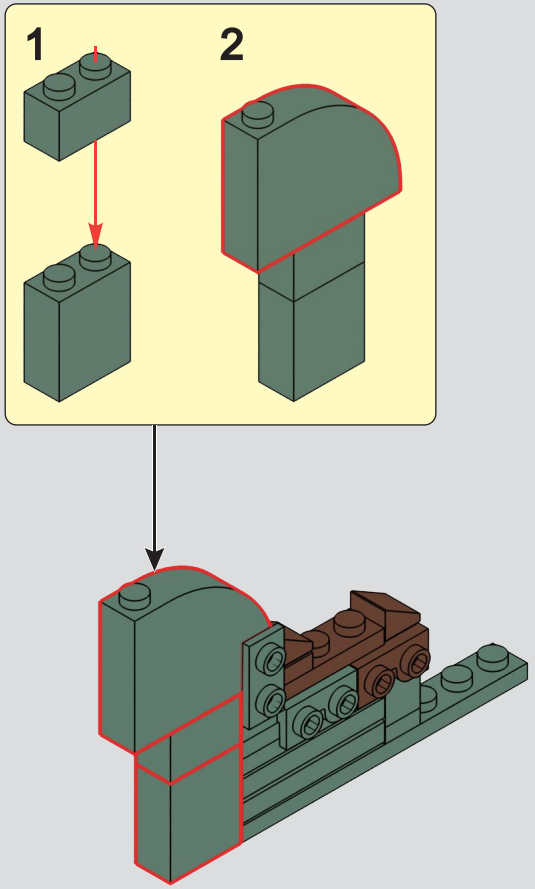

270

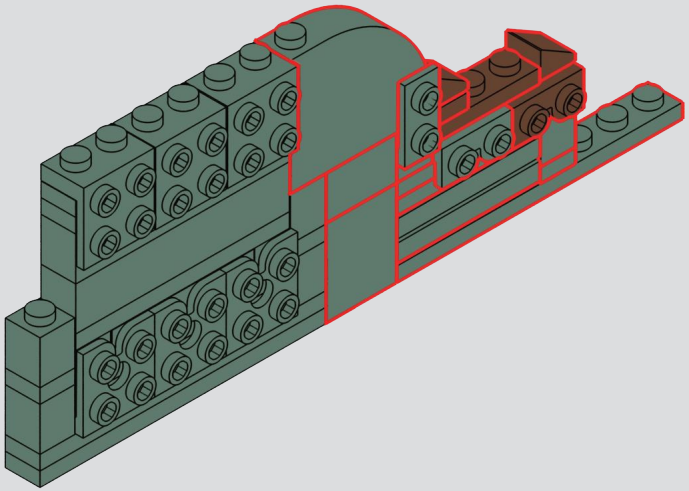

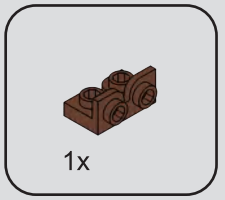

271

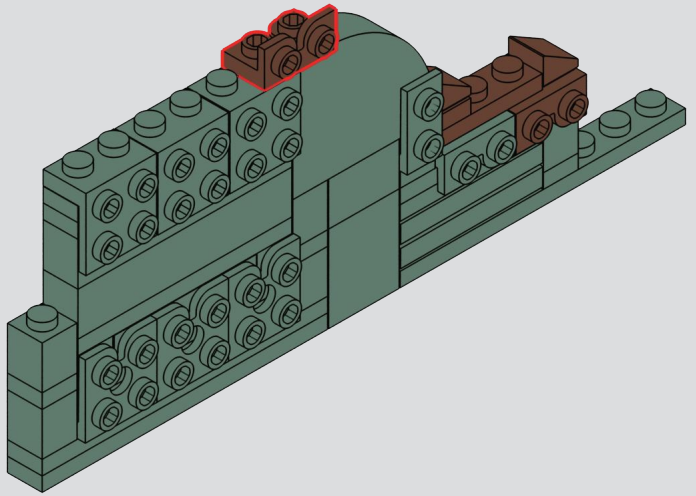

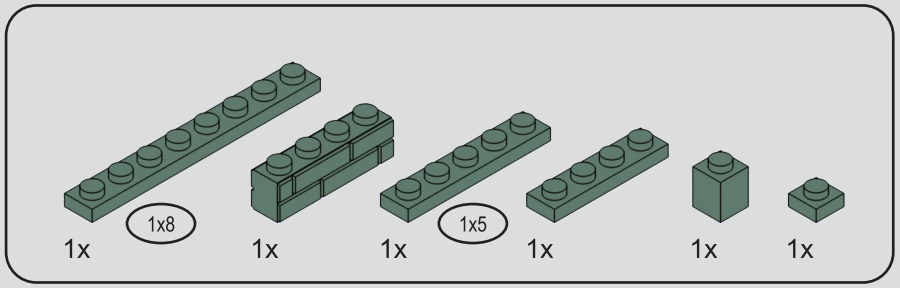

272

1

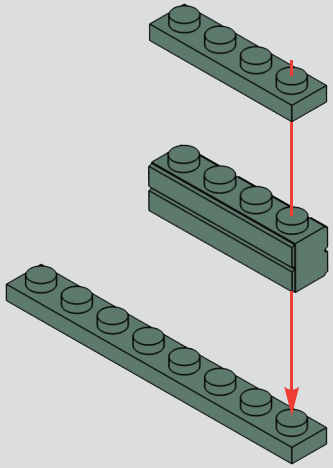

2

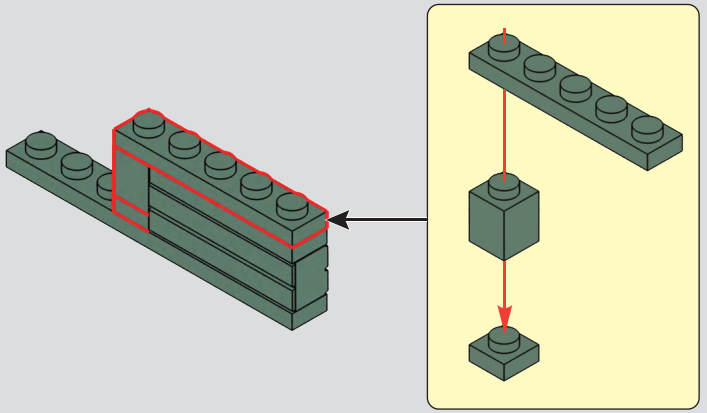

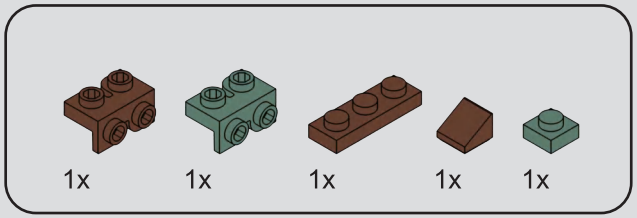

273

1

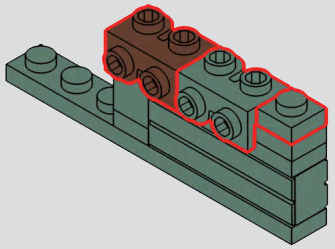

2

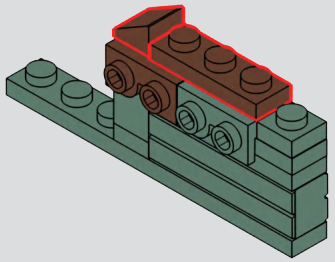

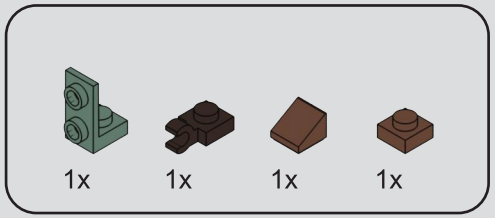

274

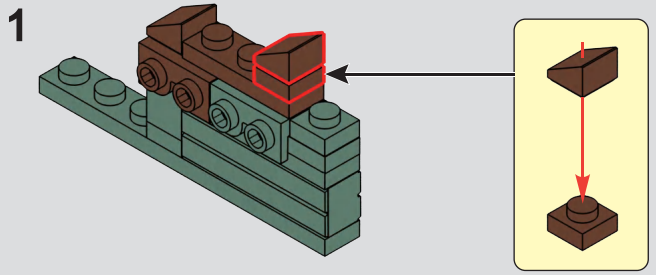

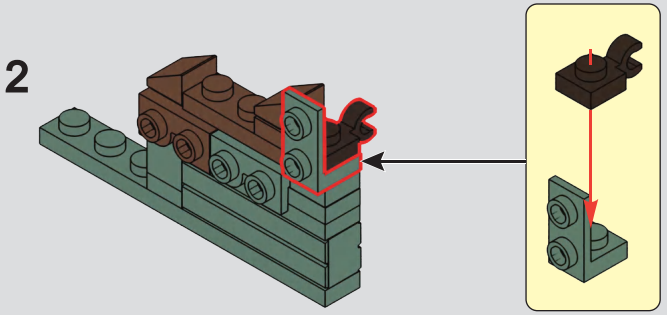

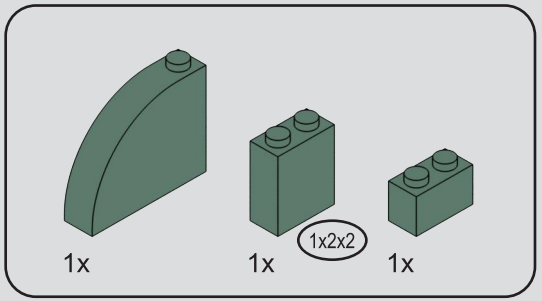

275

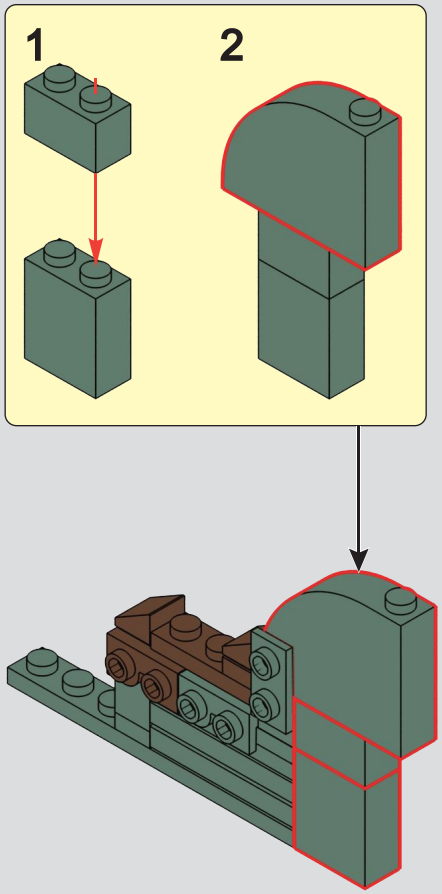

276

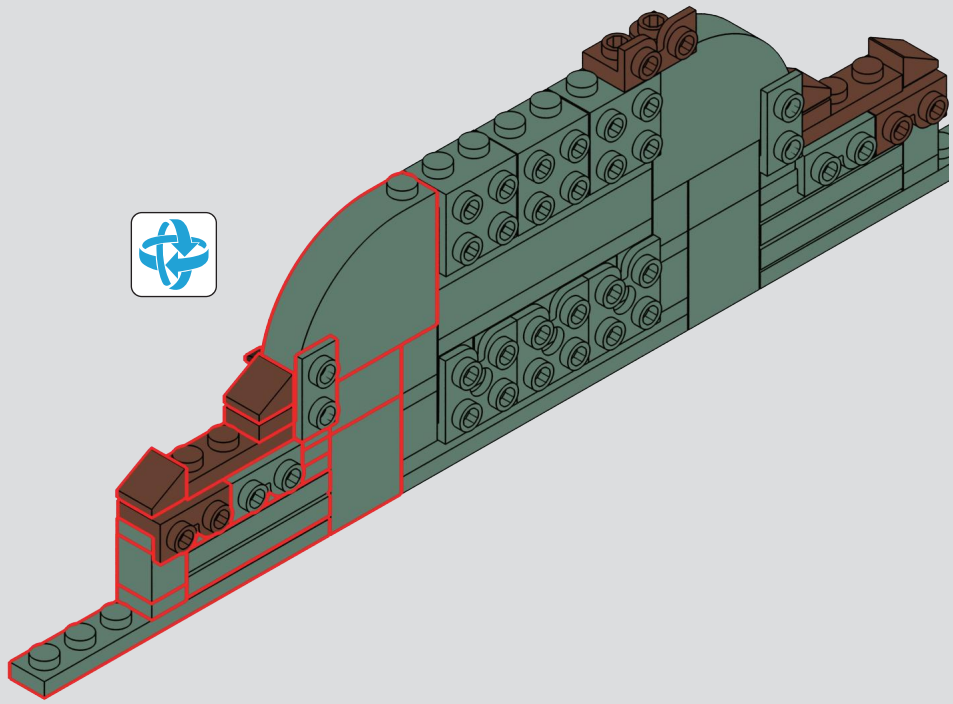

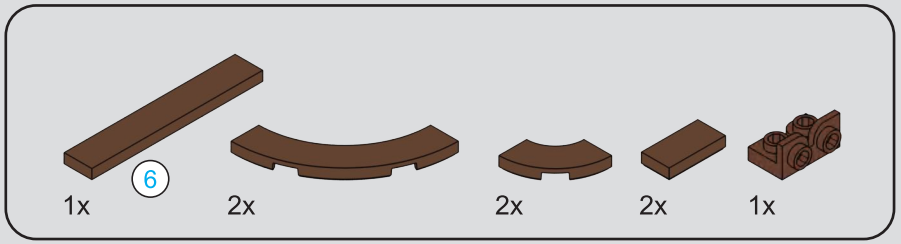



277

1

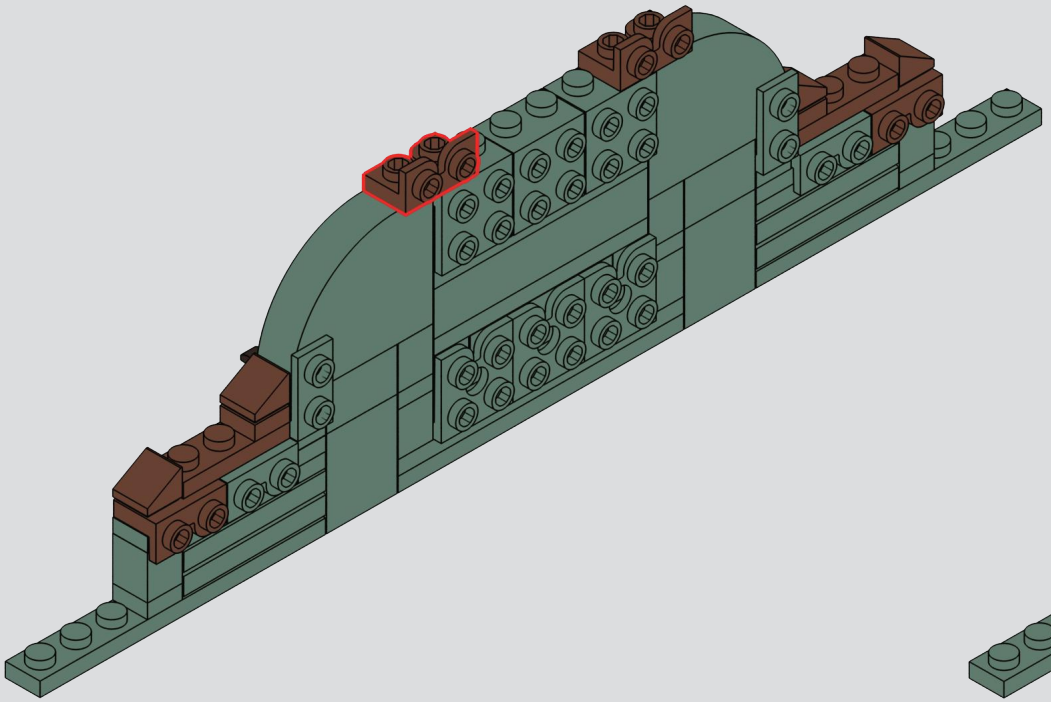

2

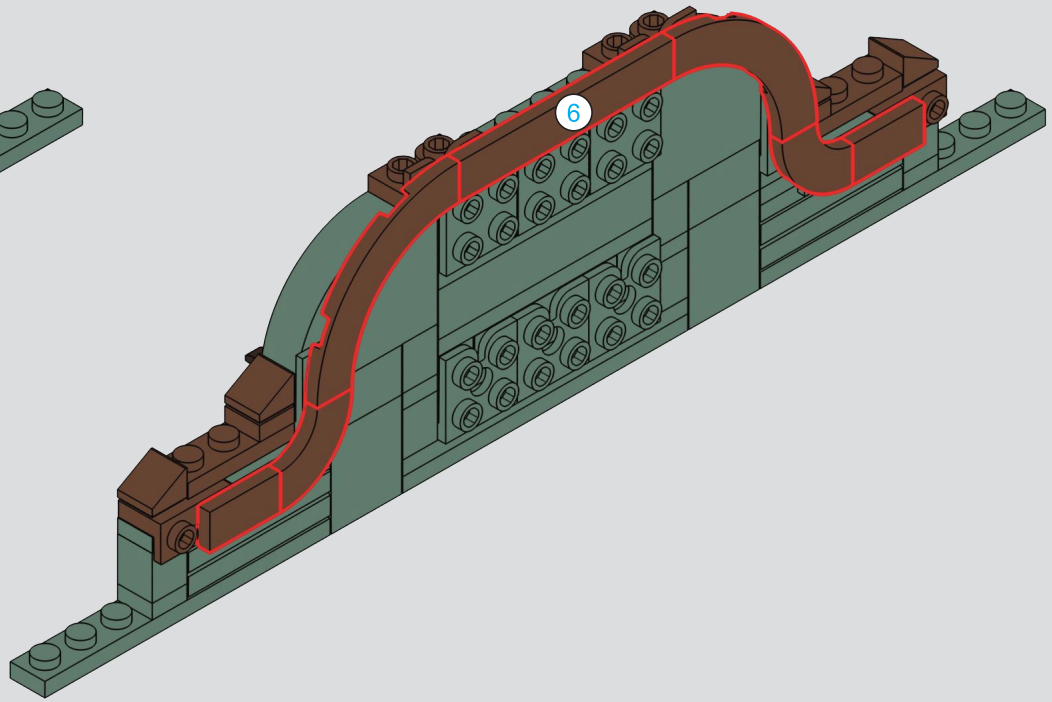

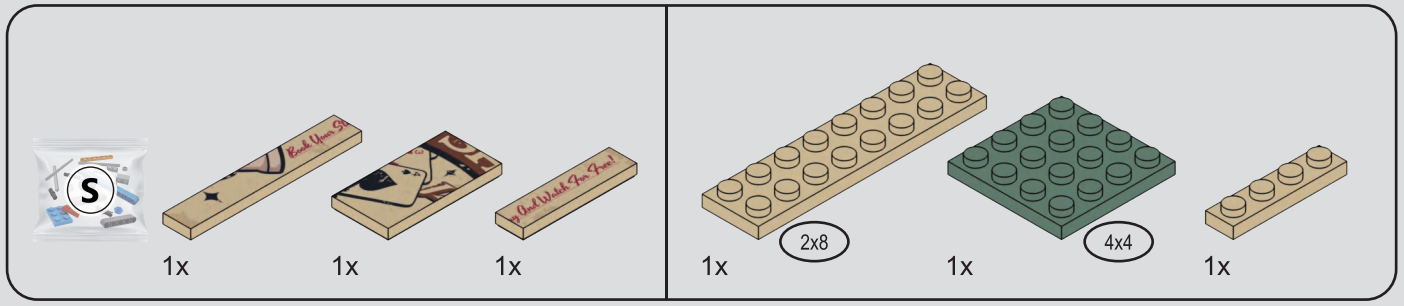

278

1

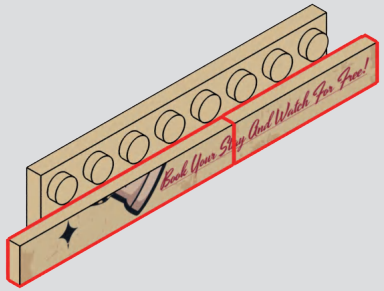

2

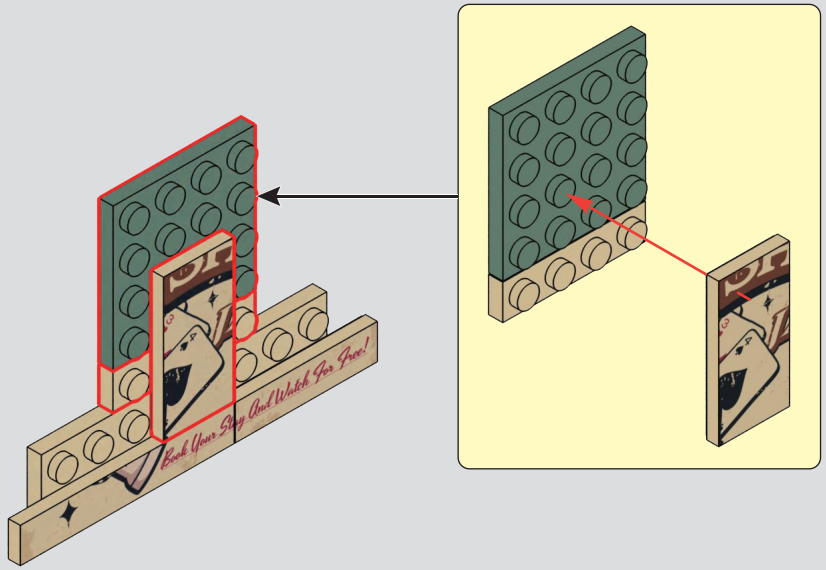

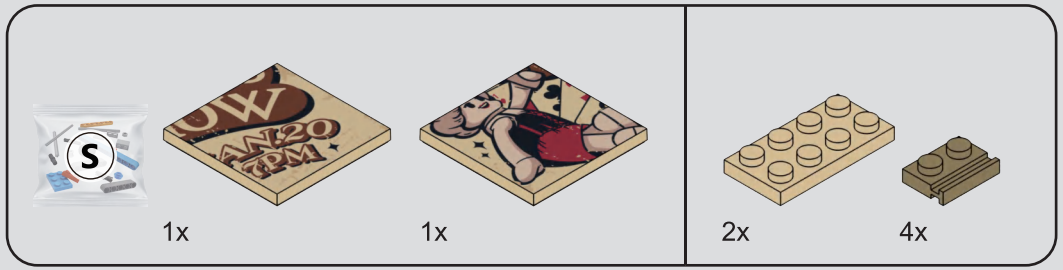
1x
1x
2x
4x

279

1

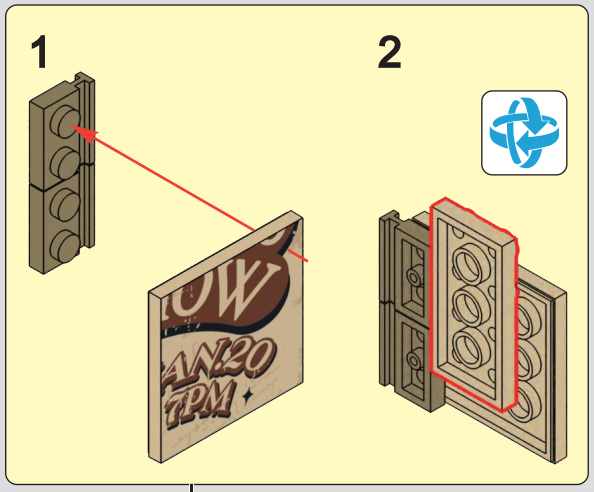
1
2

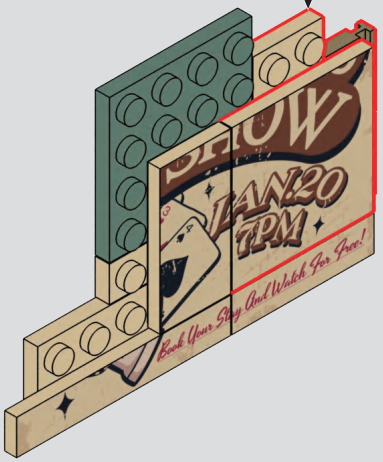
Book Your Stay And Watch For Free!

2

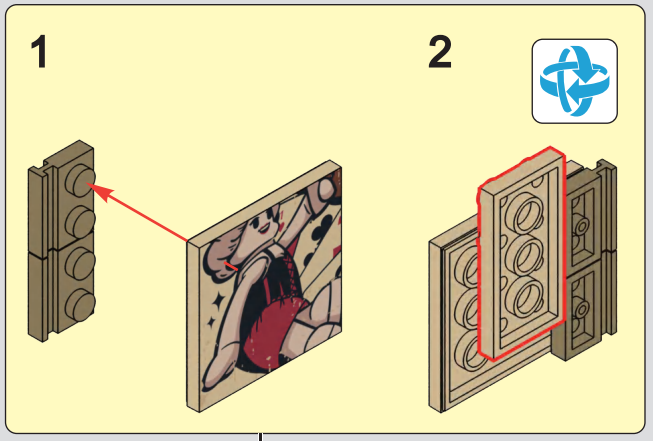
1
2

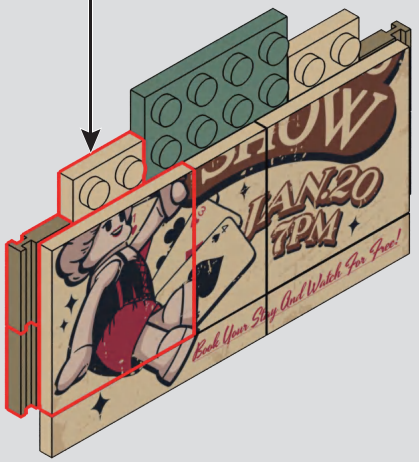
Book Your Stay And Watch For Free!

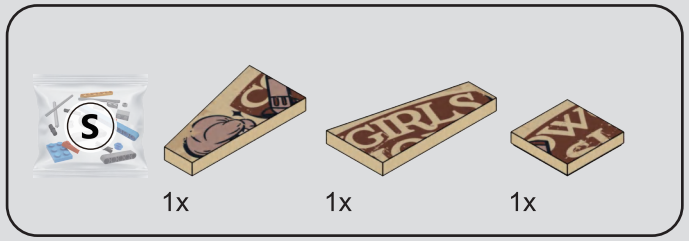
1x
1x
1x

280


GIRLS
SHOW
LAN.20
7PM
Book Your Stay And Watch For Free!

281

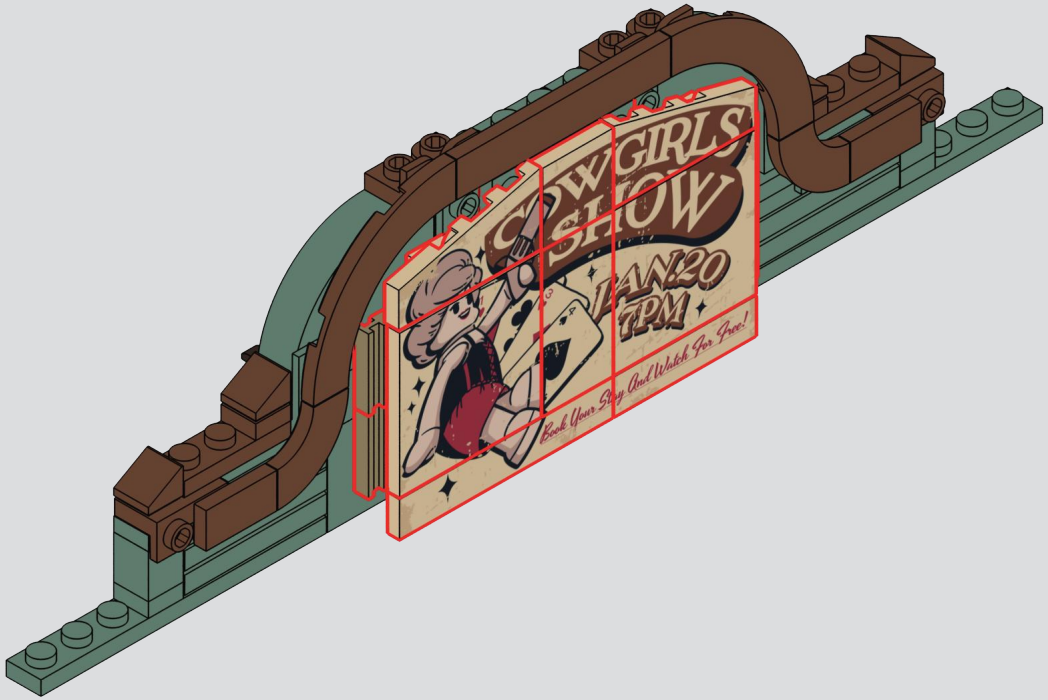
GIRLS
SHOW
LAN.20
7PM
Book Your Stay And Watch For Free!

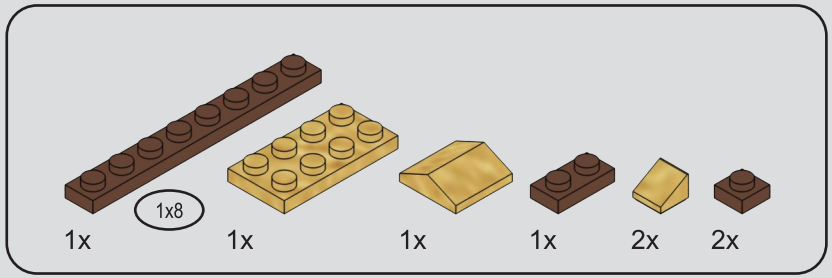

282

1

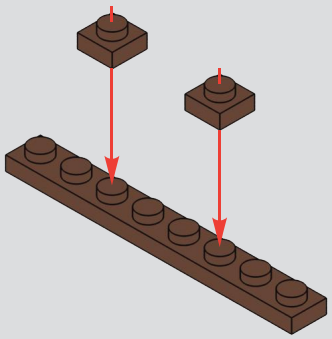

2

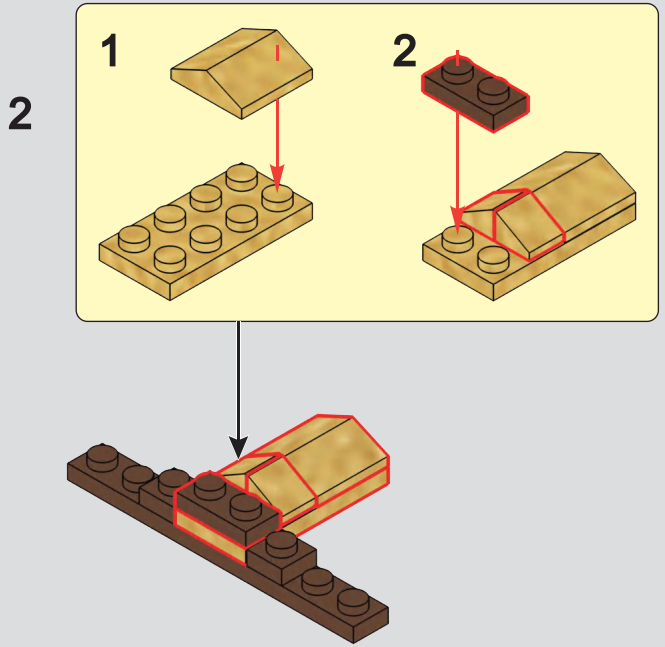

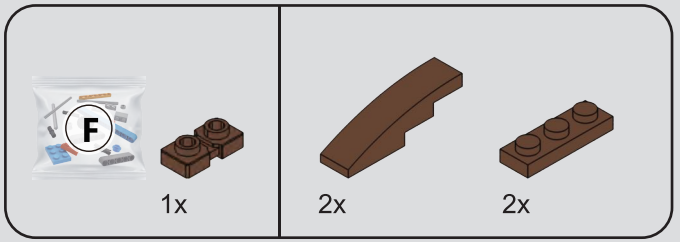

283

1

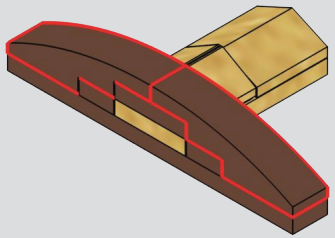

2

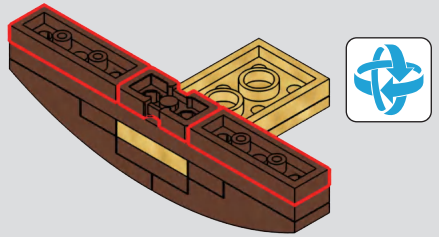

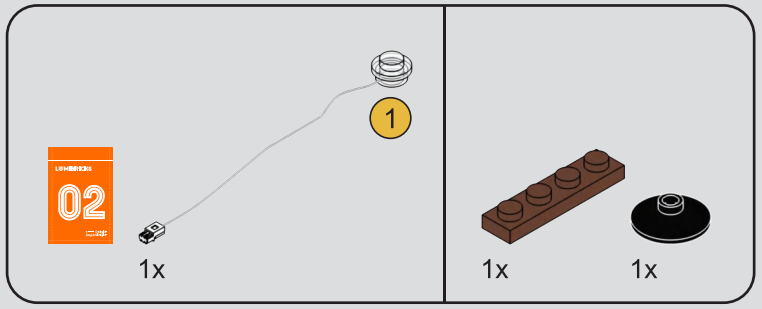

284

1

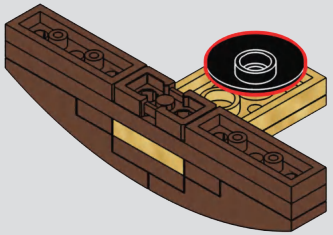

2

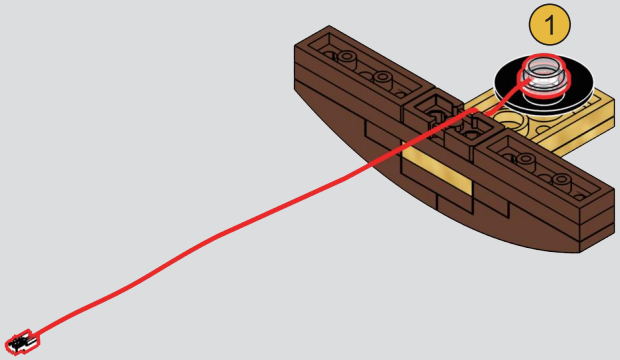

3

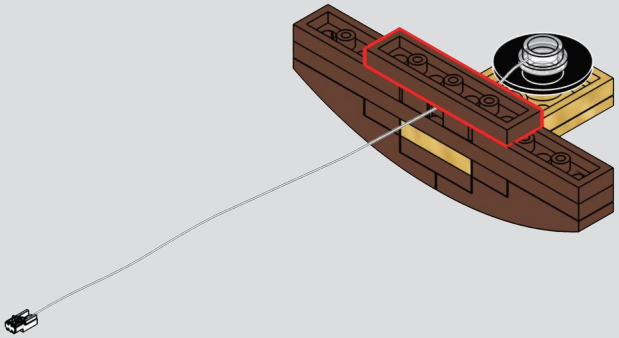

285

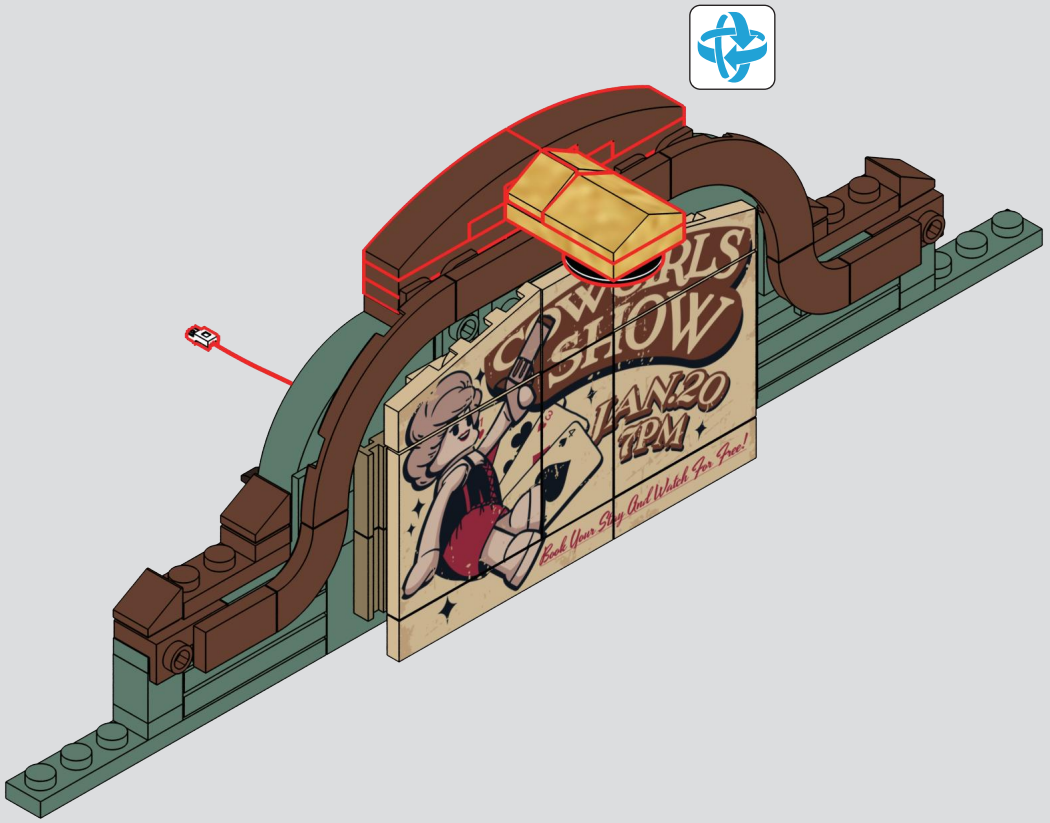

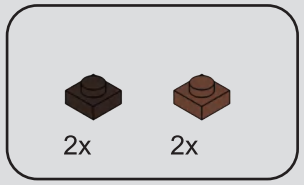

286

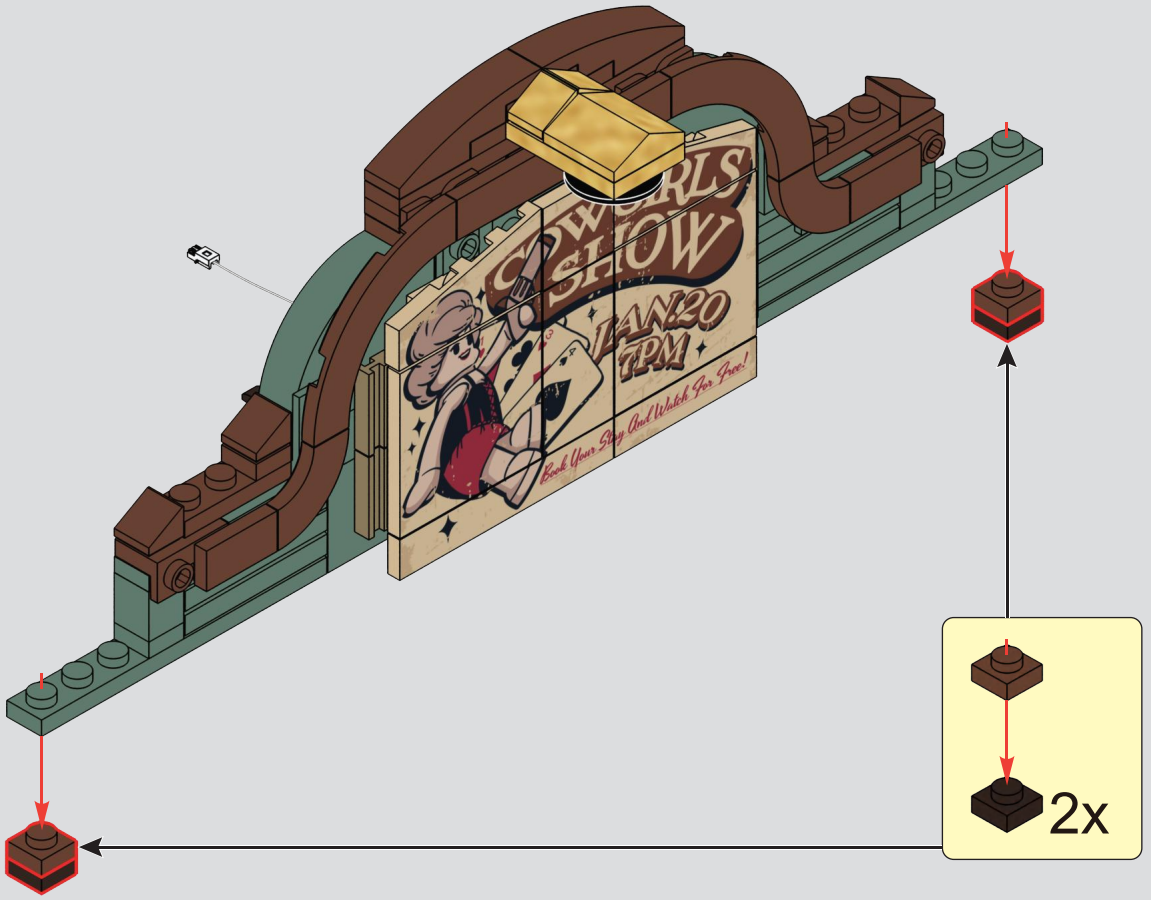


SHOW
Book Your Stay And Watch For Free!
FOR
NEWCOMERS!


2x
2x
2x
4x
2x
288
1
2
3
1
2
3
COWGIRLS SHOW
JAN.20
7PM
Book Your Stay And Watch For Free!
FOR NEWCOMERS!


2x
289
COWGIRLS
SHOW
JAN.20
7PM
Book Your Stay And Watch For Free!
FOR
NEWCOMERS!


12x
4x
4x
290
1
2
4x

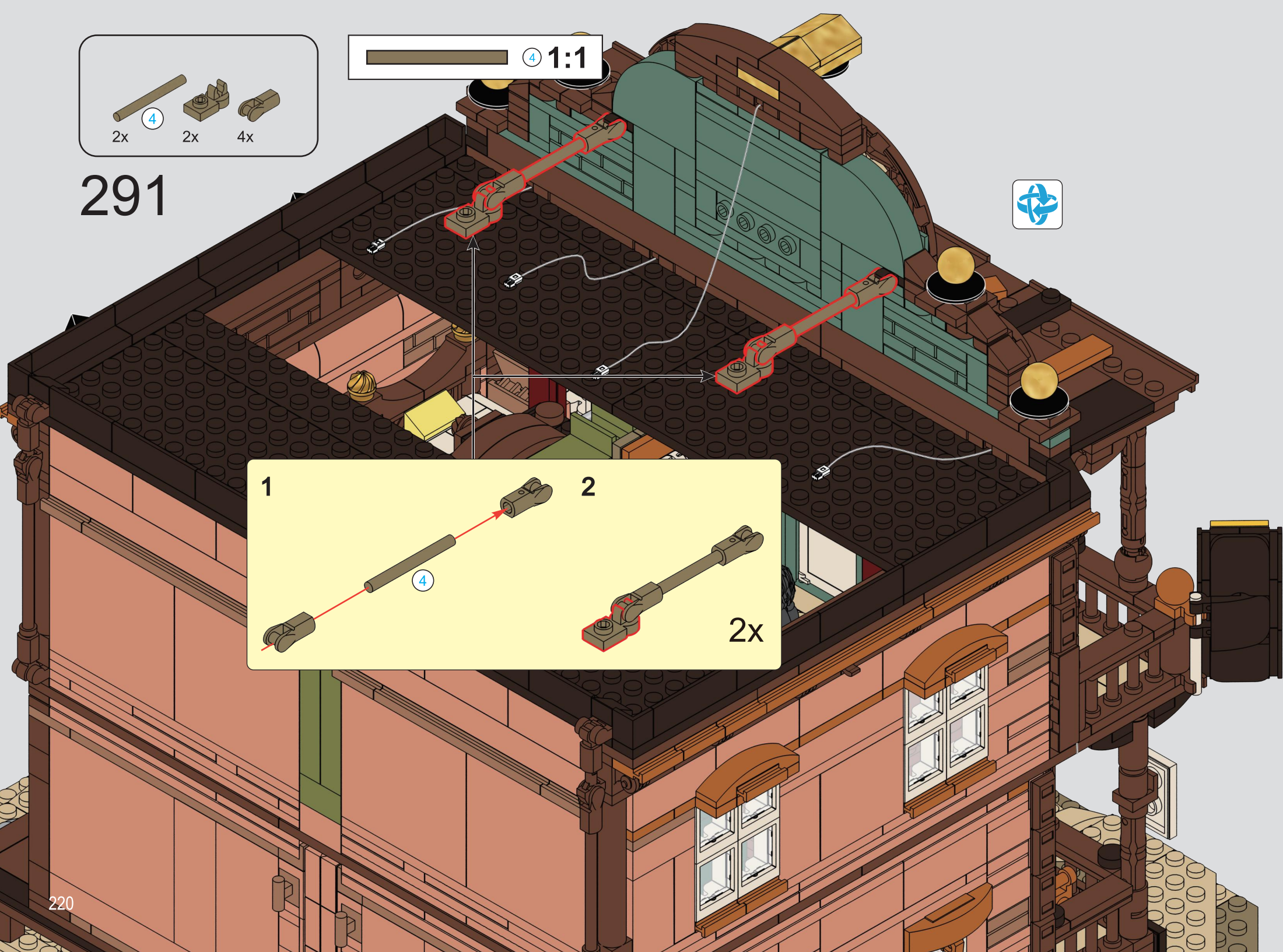
2x
4
2x
4x
4 1:1
291
1
2
4
2x

292

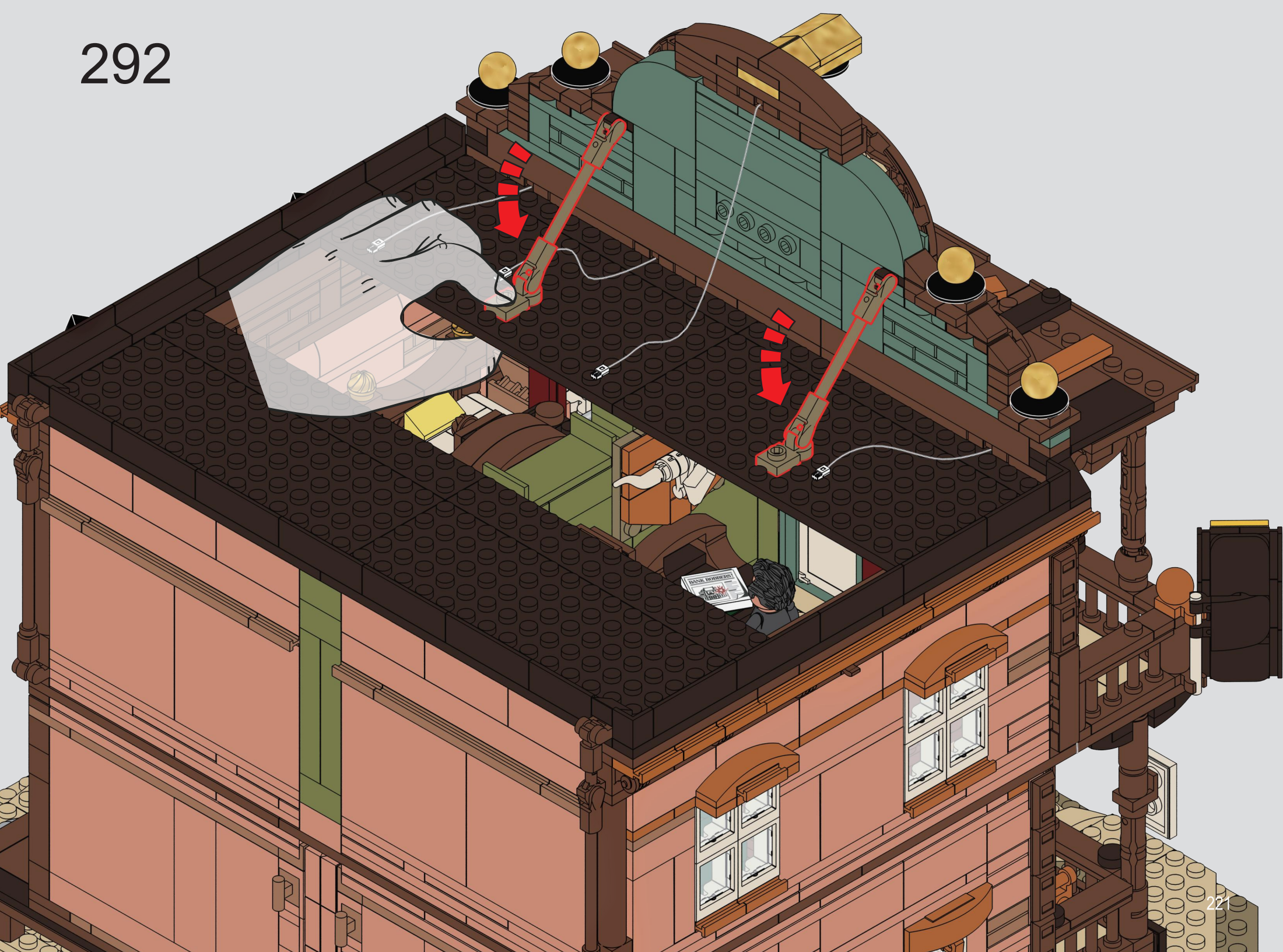


14


F


S

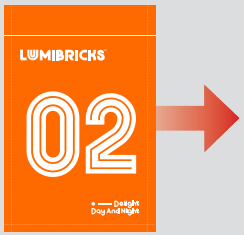
LUMIBRICKS
02


GOLD RUSH HOTEL
HOT BATH 50¢
WANTED

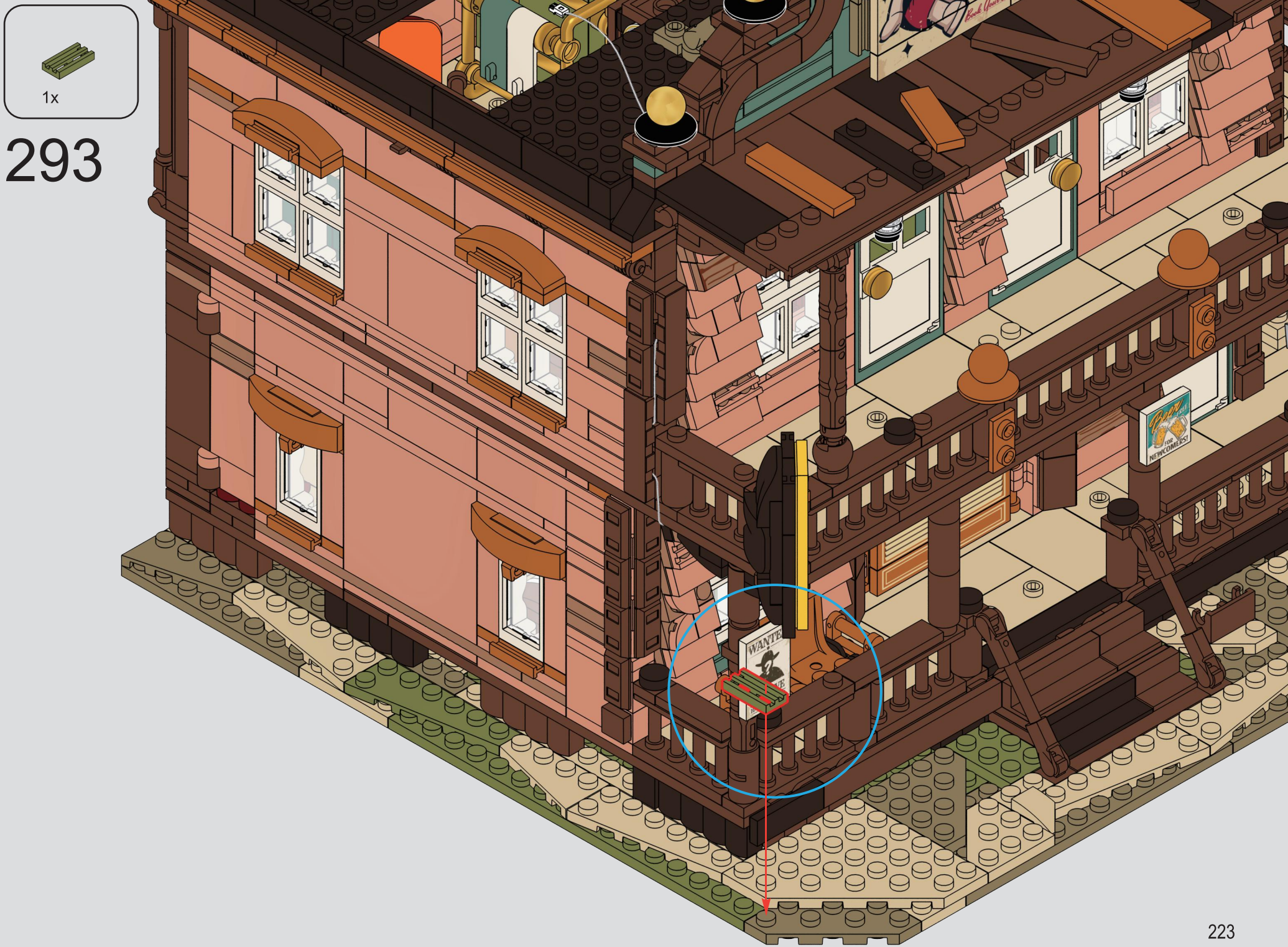
1x
293

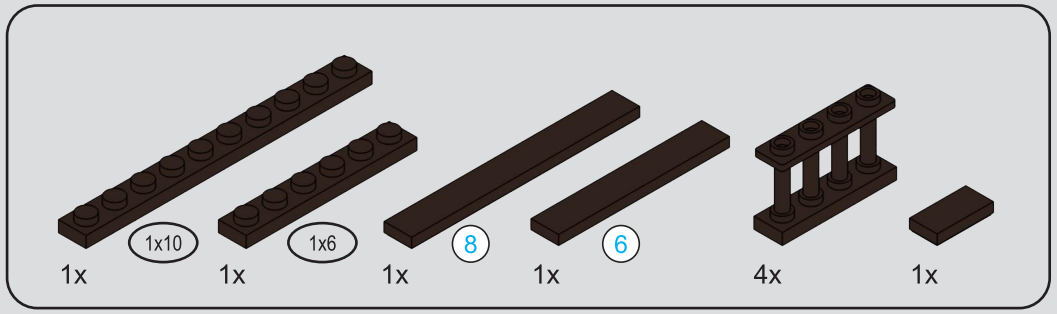



294

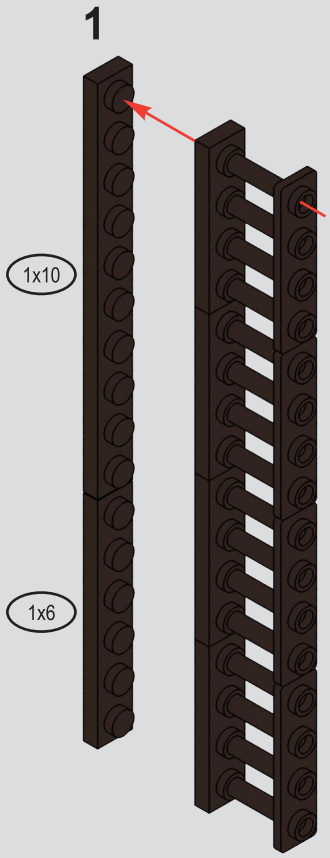

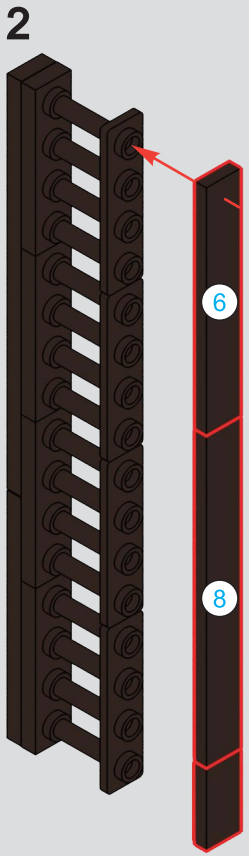

295



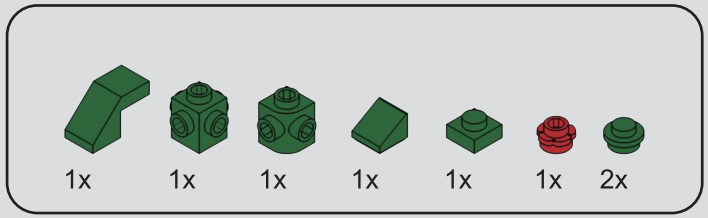

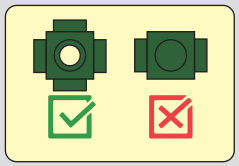

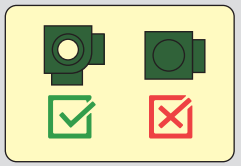

296

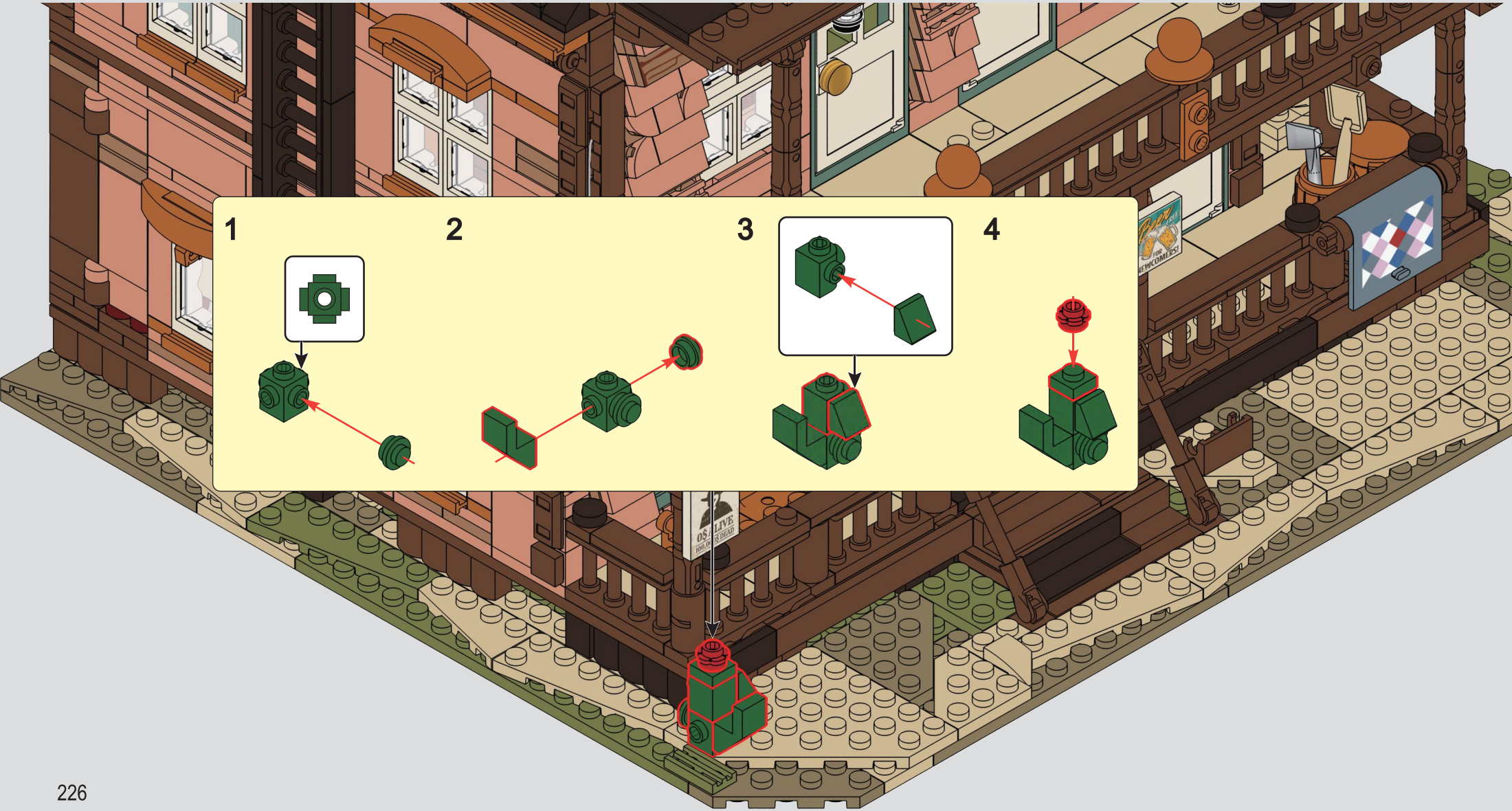

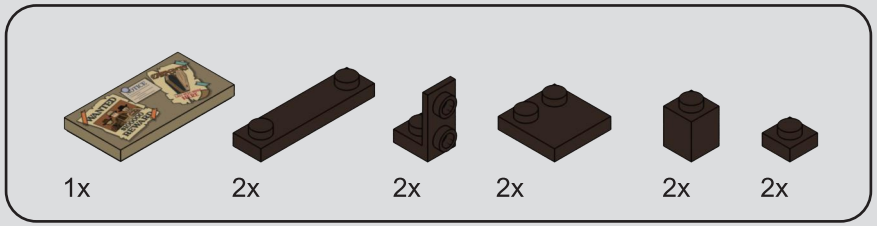

297

1

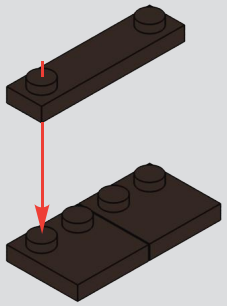

2

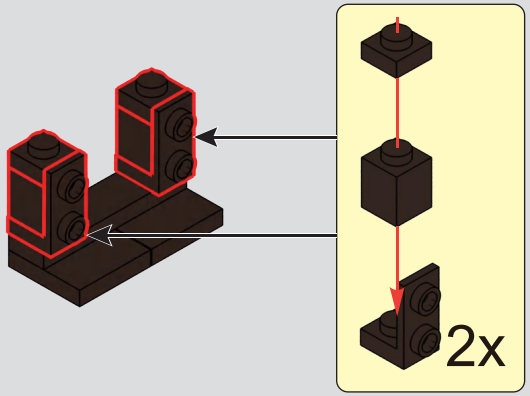

3

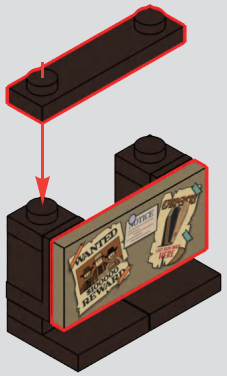

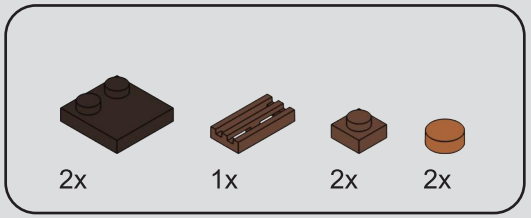

298

1

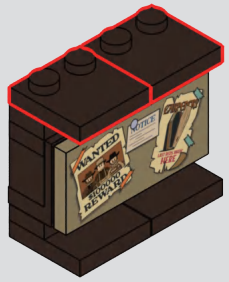

2

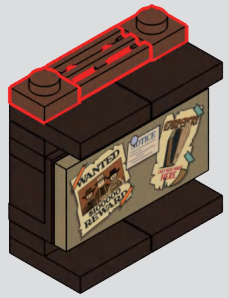

3

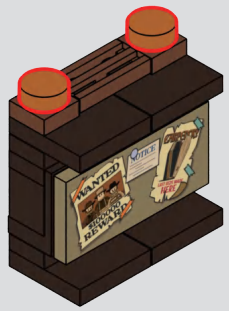

299

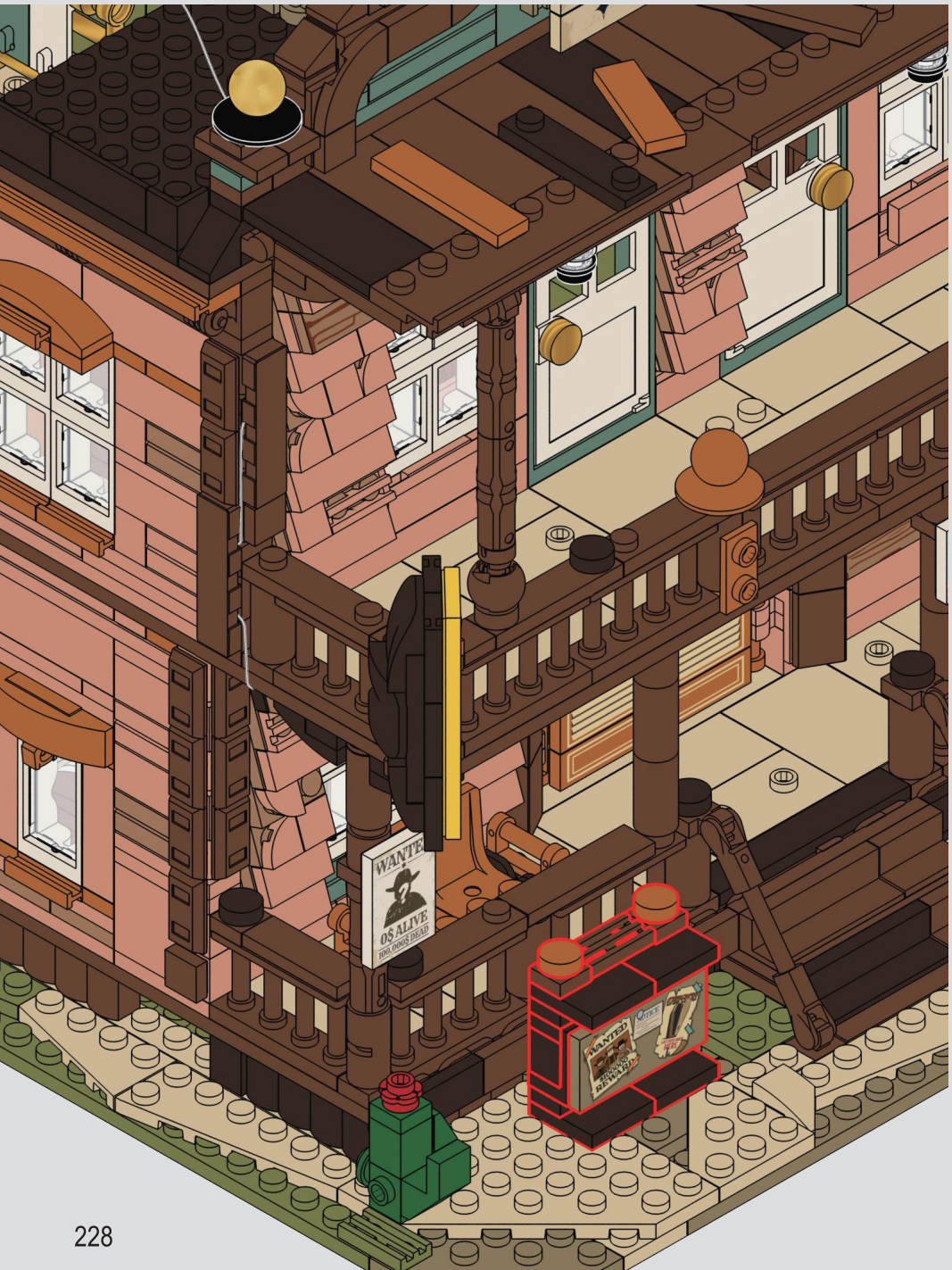

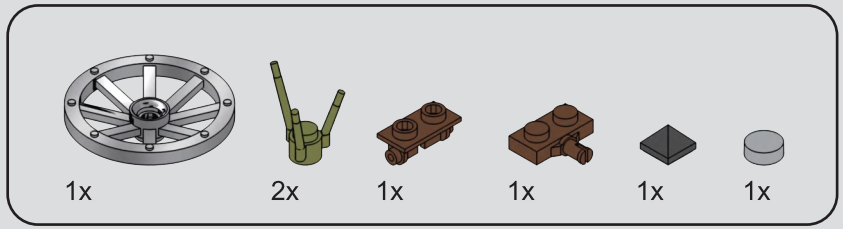

300

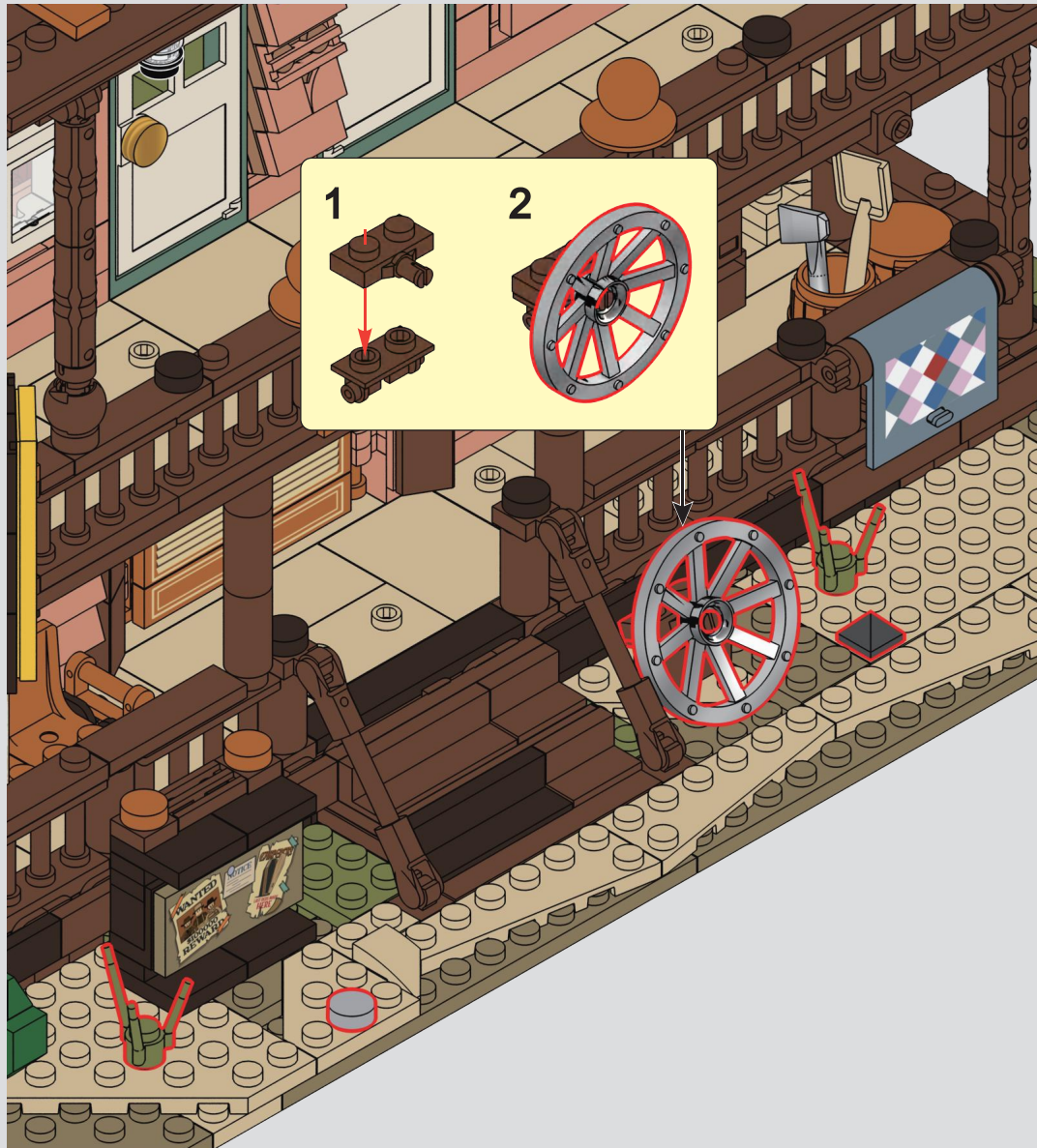

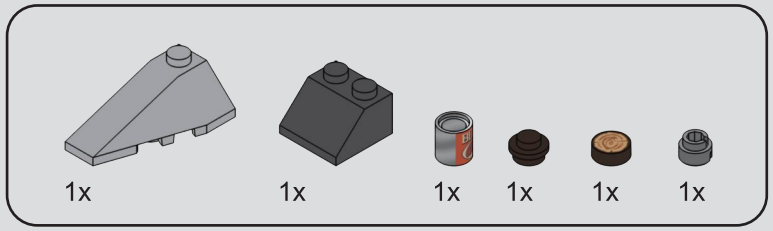

301

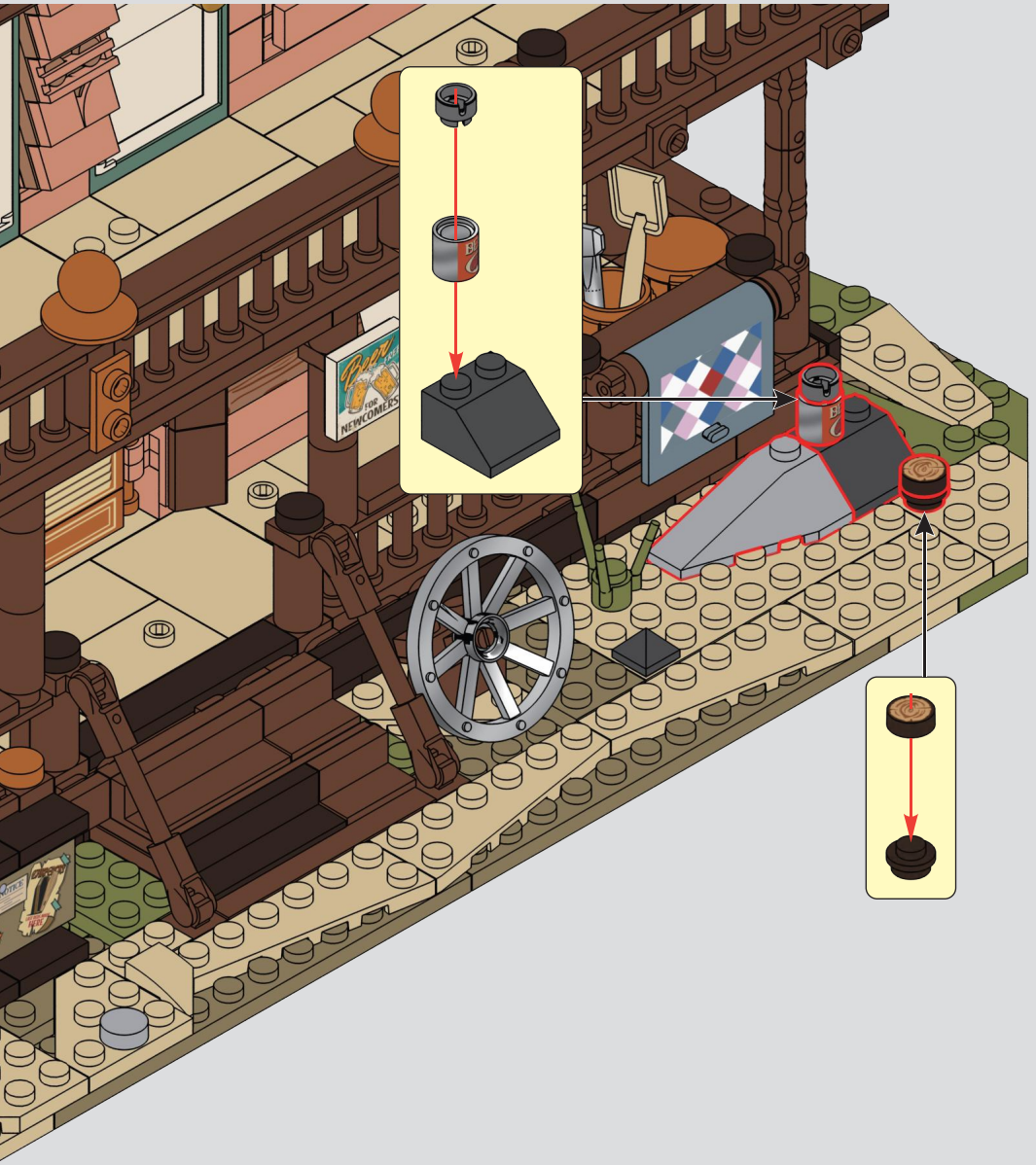

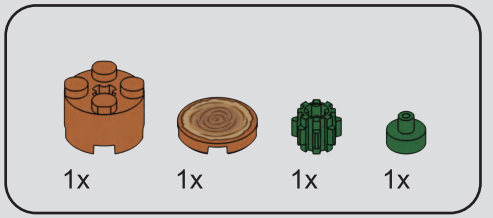

302

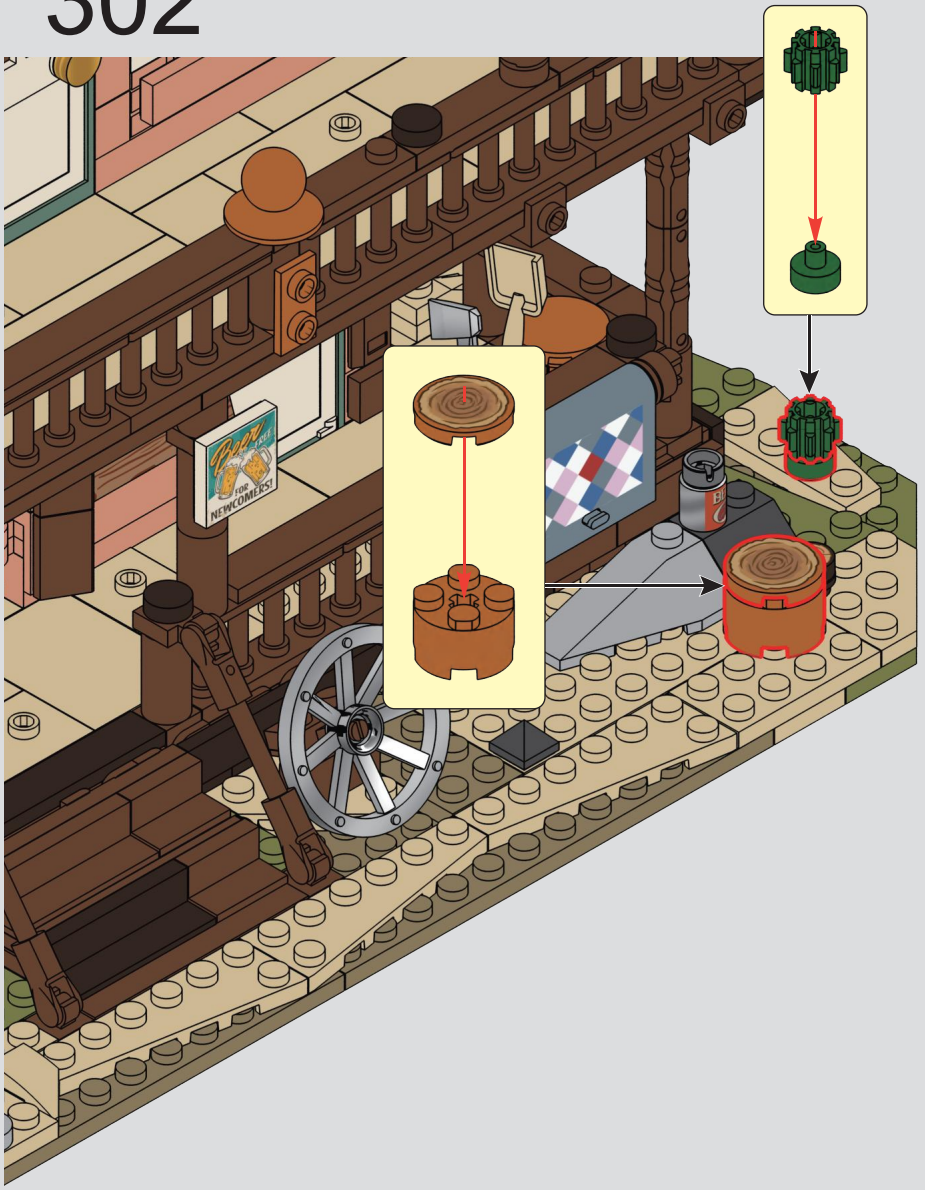

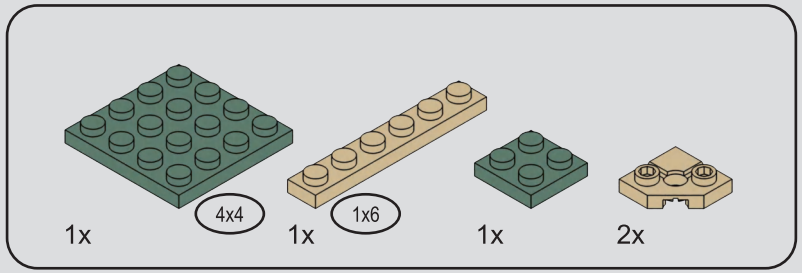

303

1

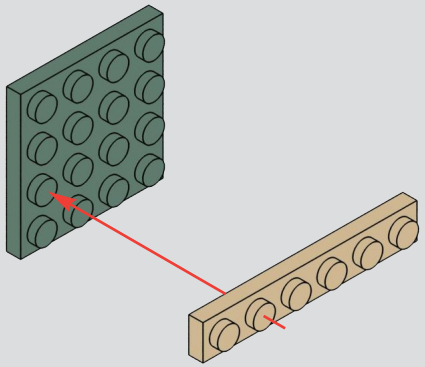

2

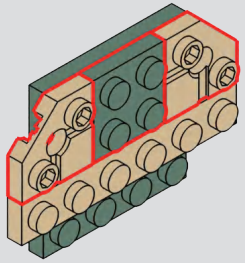

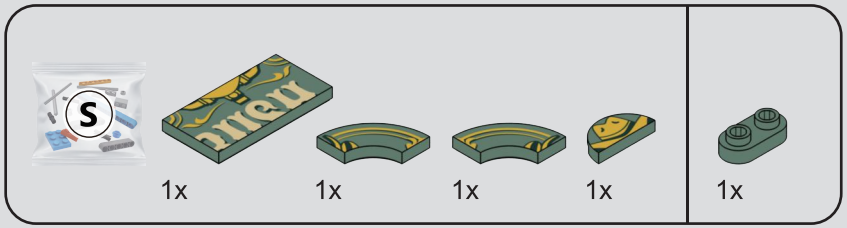

304

1

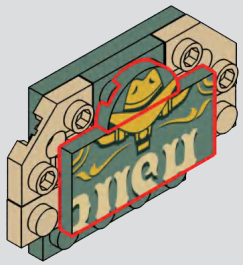

2

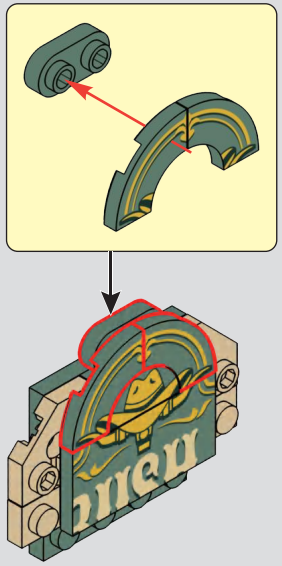

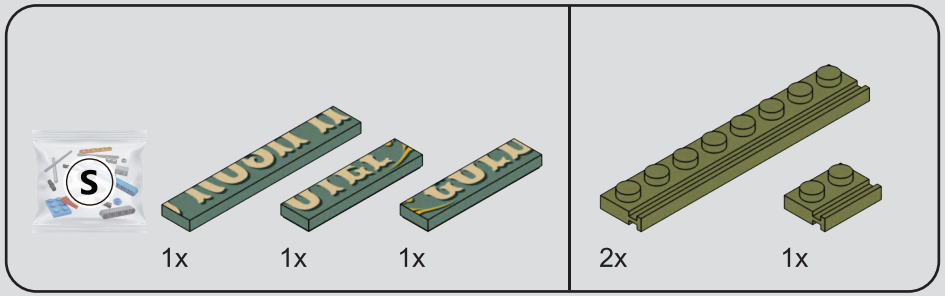

305

1

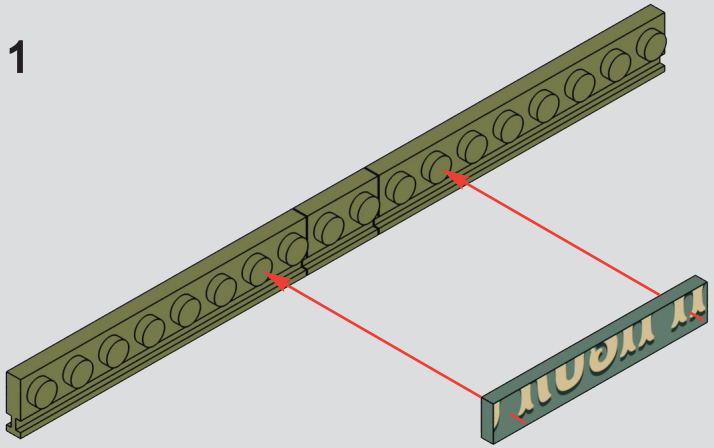

2

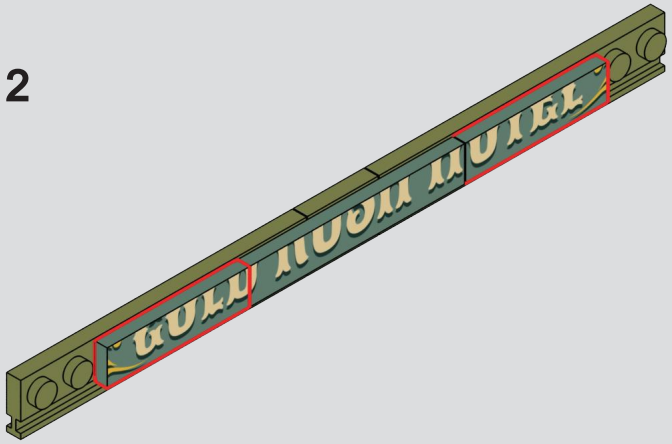

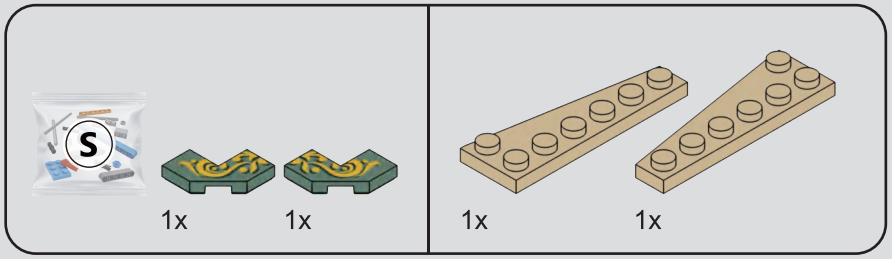

306

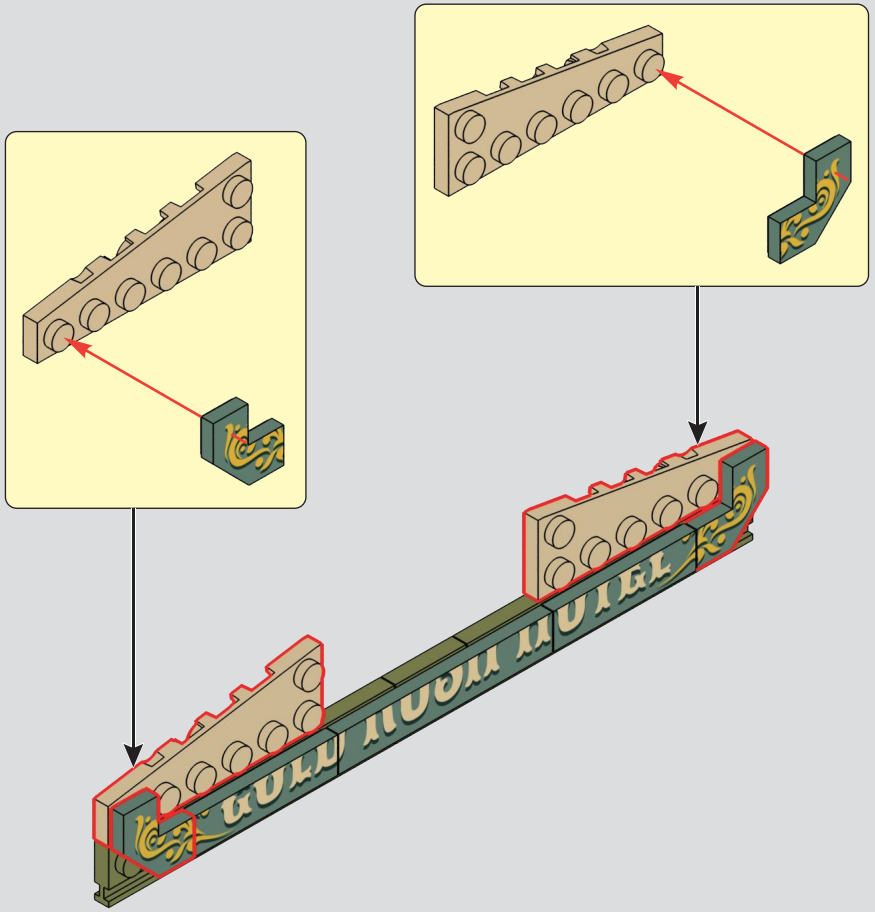

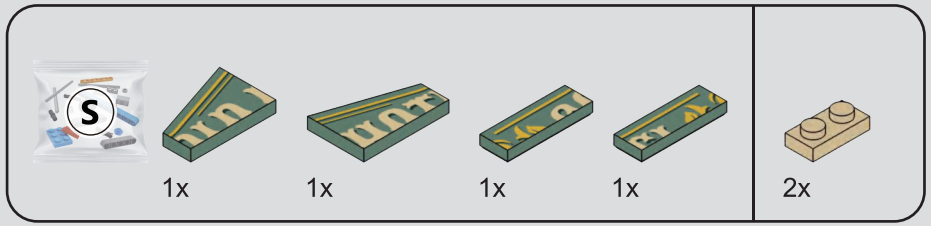

307

1

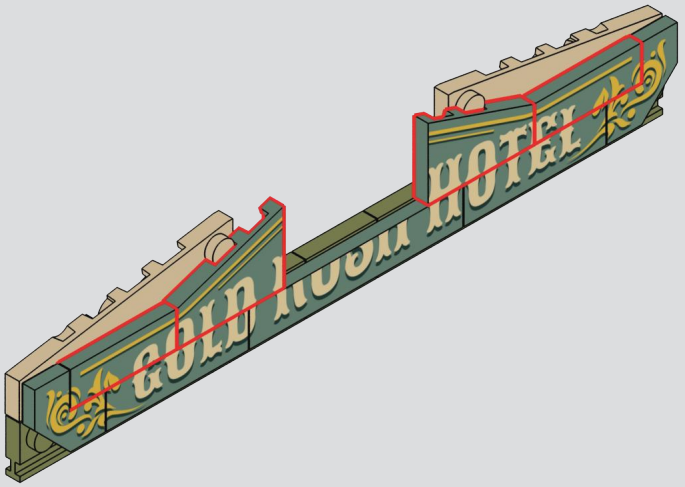

2

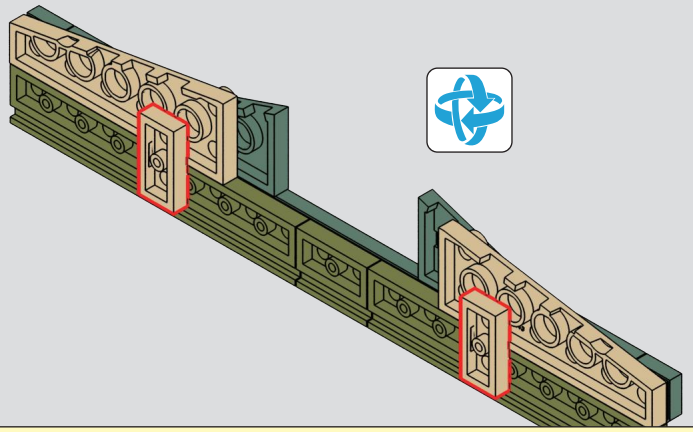

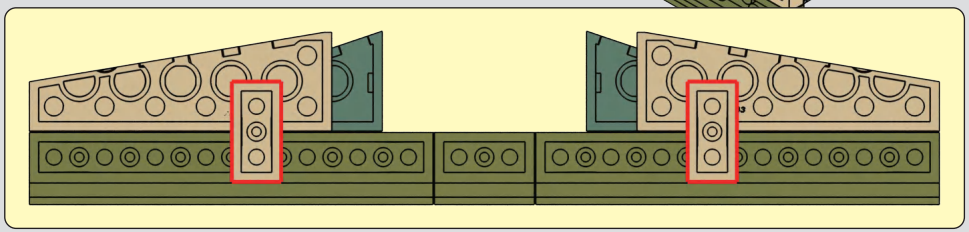

308

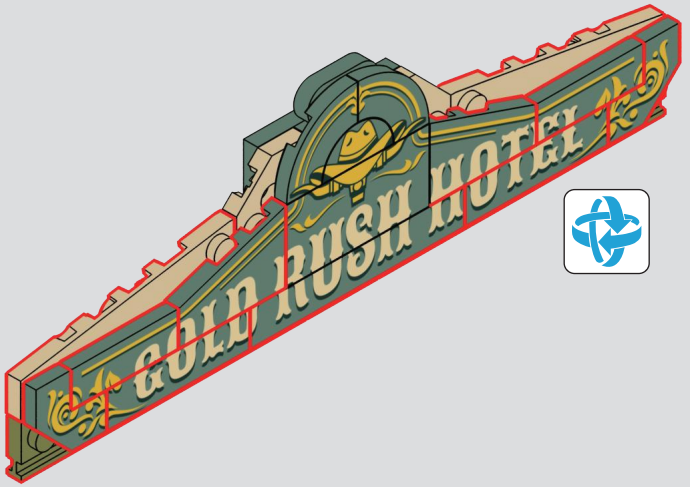

309

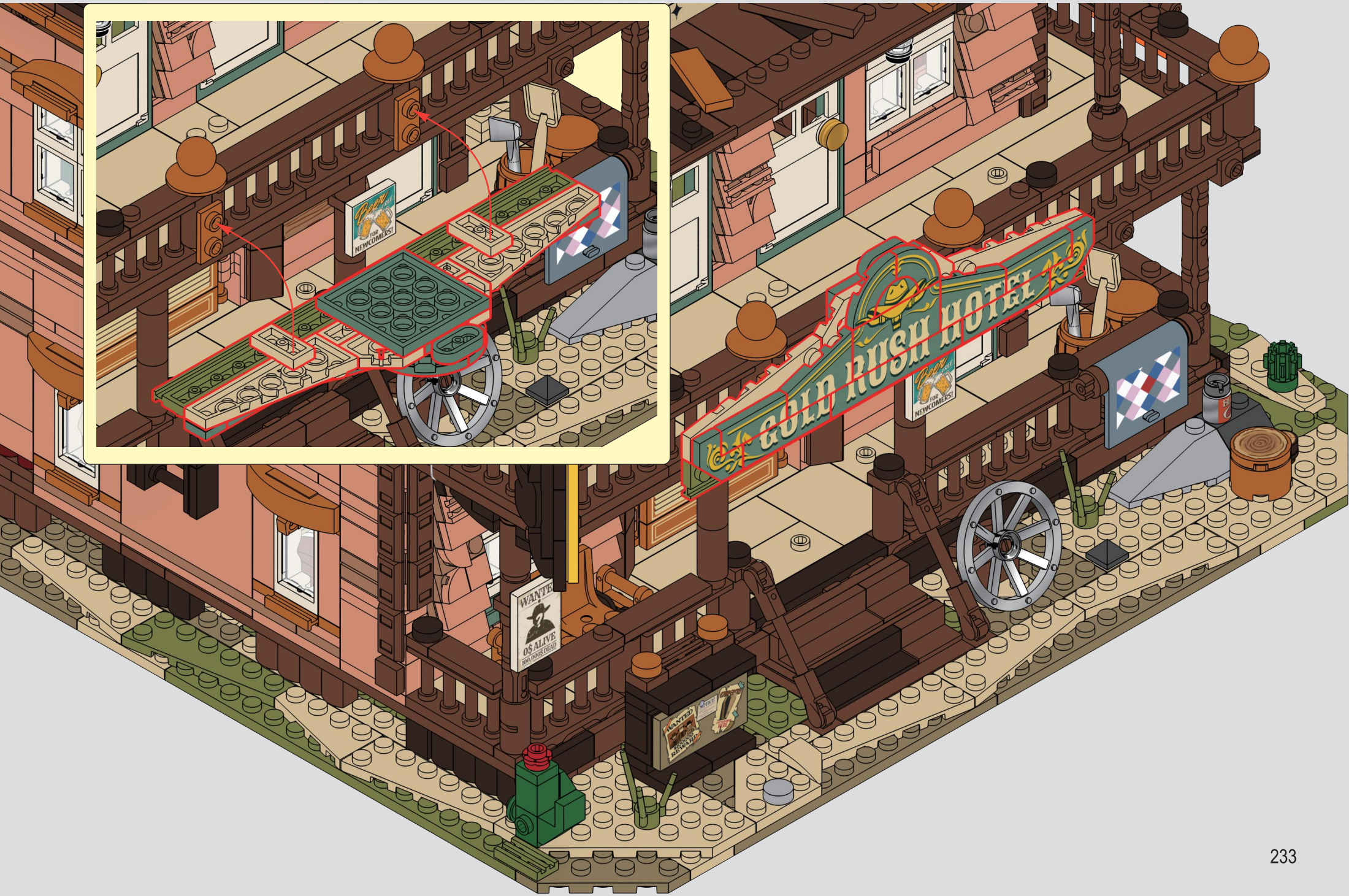
GOLD RUSH HOTEL
BEER
FOR NEWCOMERS!
WANTED
DEAD OR ALIVE
100,000$ REWARD

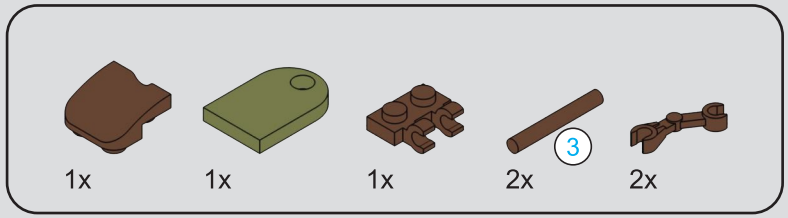

310

1

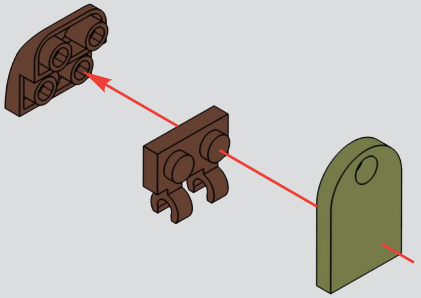

2

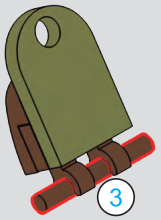

3

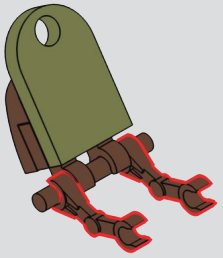

4

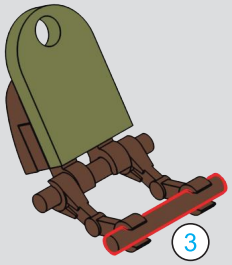



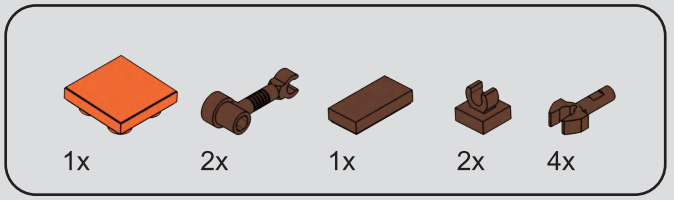

311

1

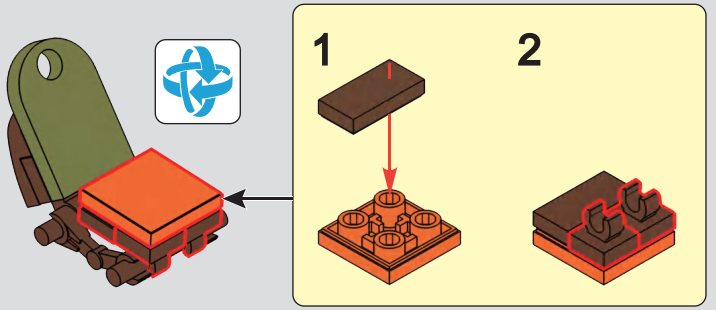

2

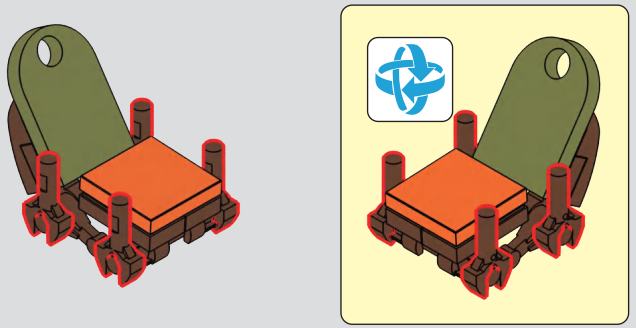

3

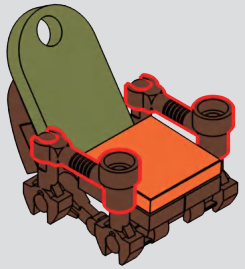

312

1


GOLD RUSH HO
WANTE
0$ ALIVE
100,000$ DEAD

2

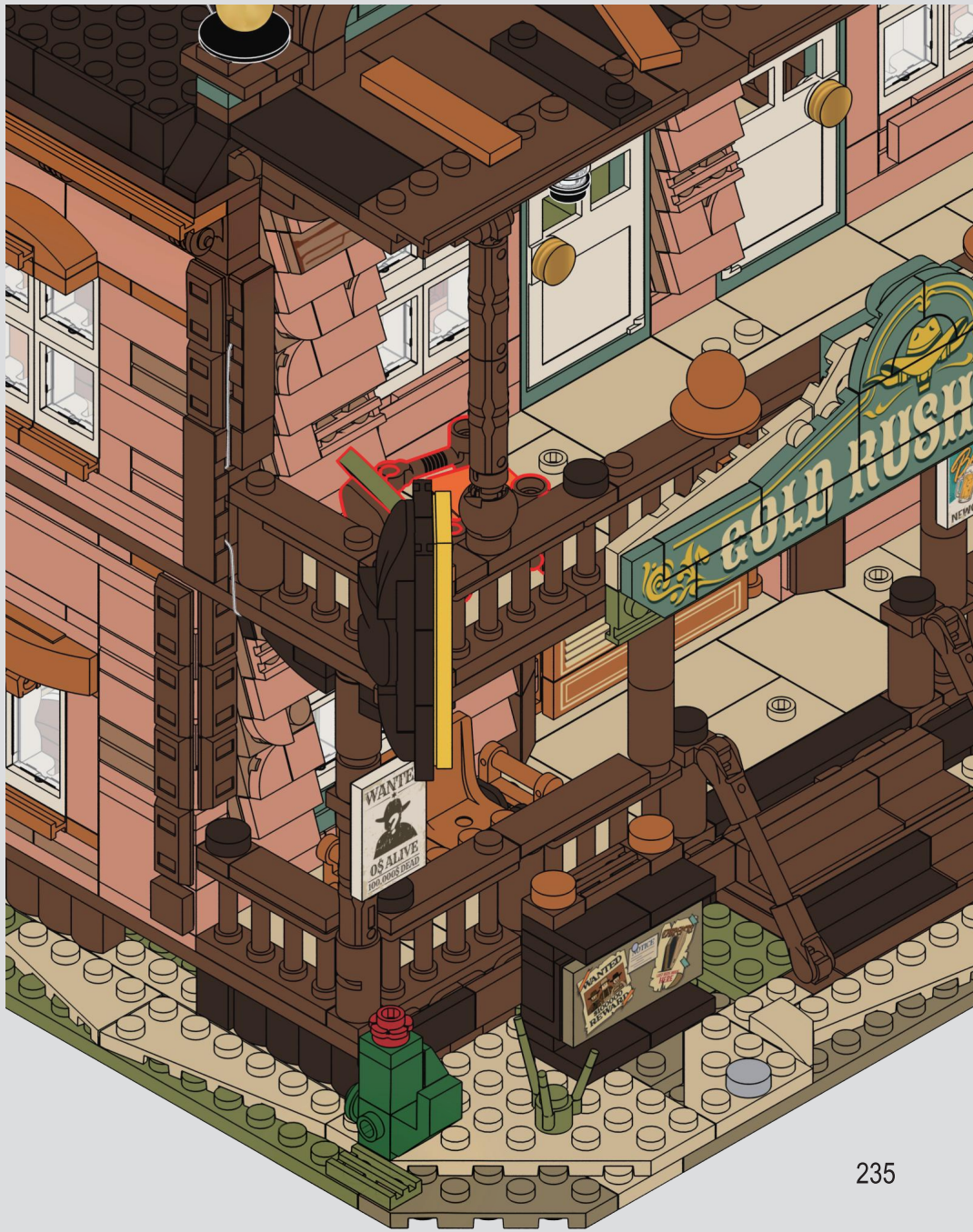
GOLD RUSH
WANTE
0$ ALIVE
100,000$ DEAD

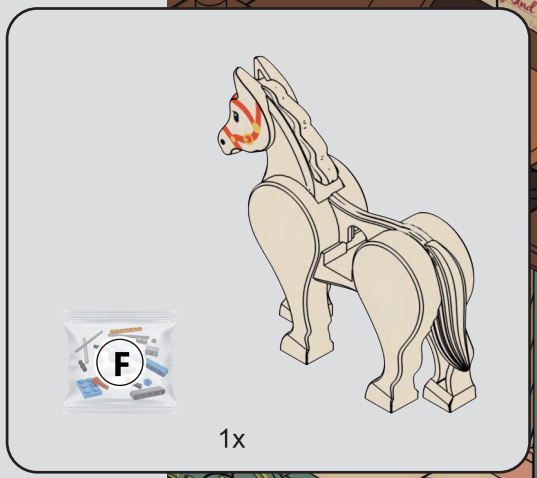

313

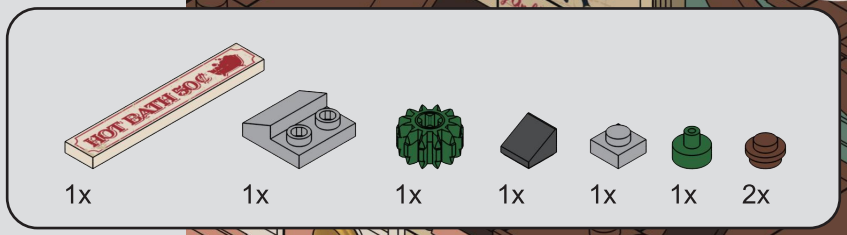

314



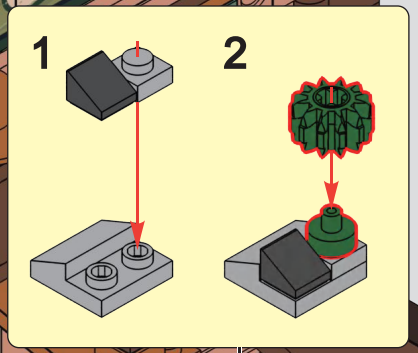


02
1x
1x
315
BANK ROBBERS

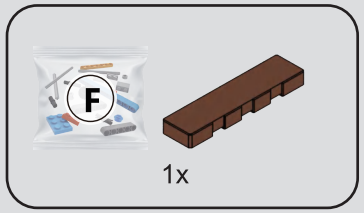

316 1

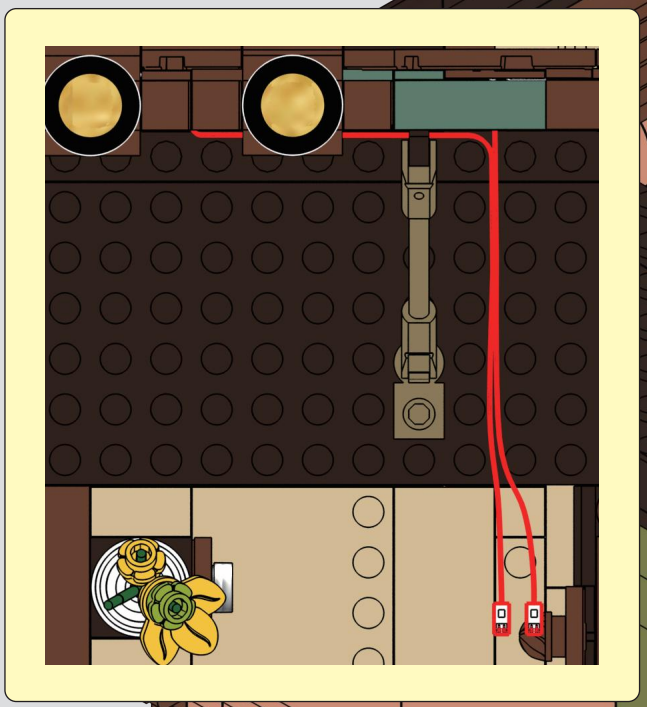

2



3

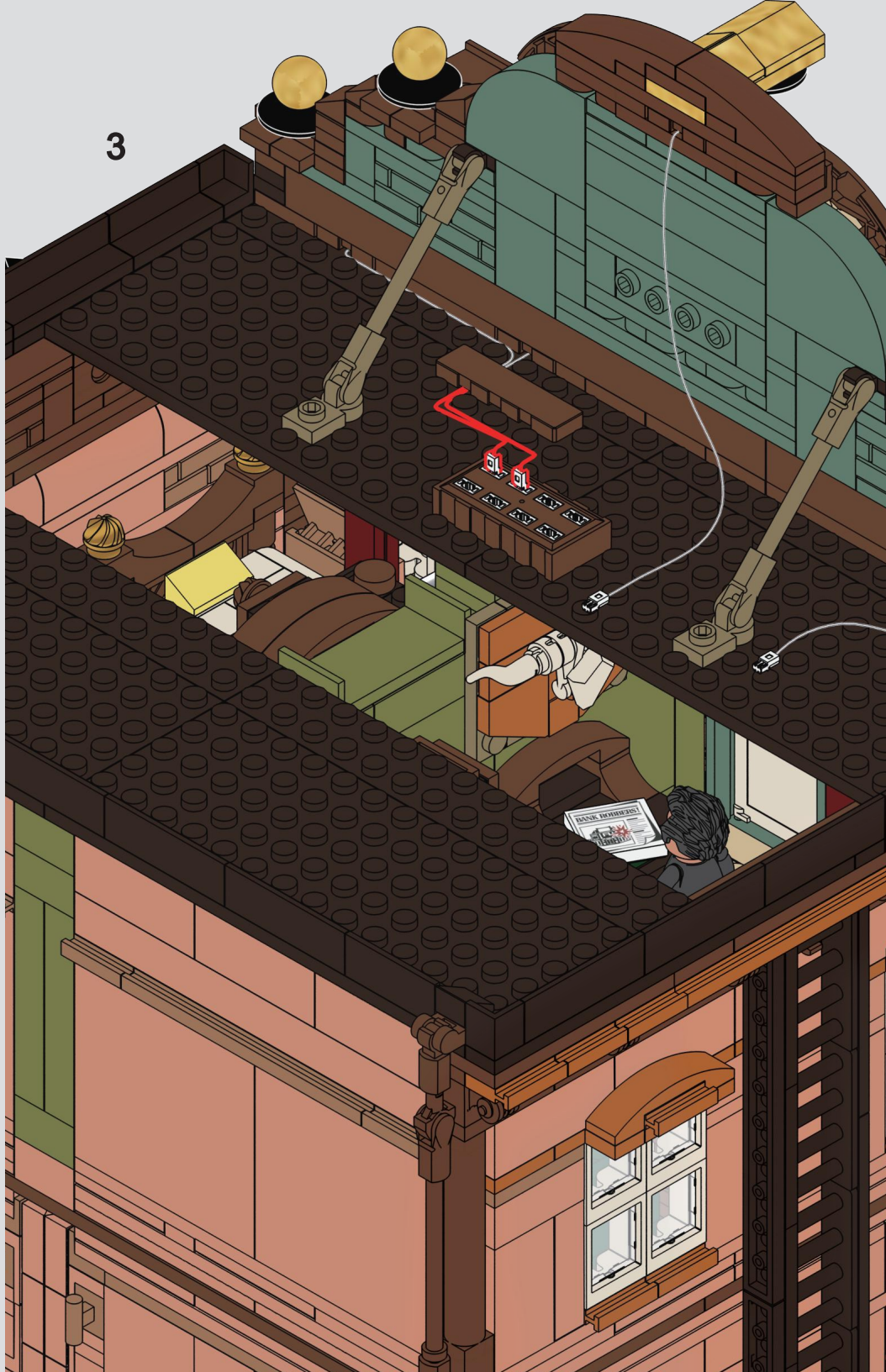

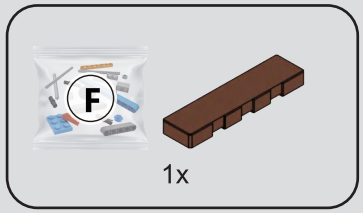

317

1

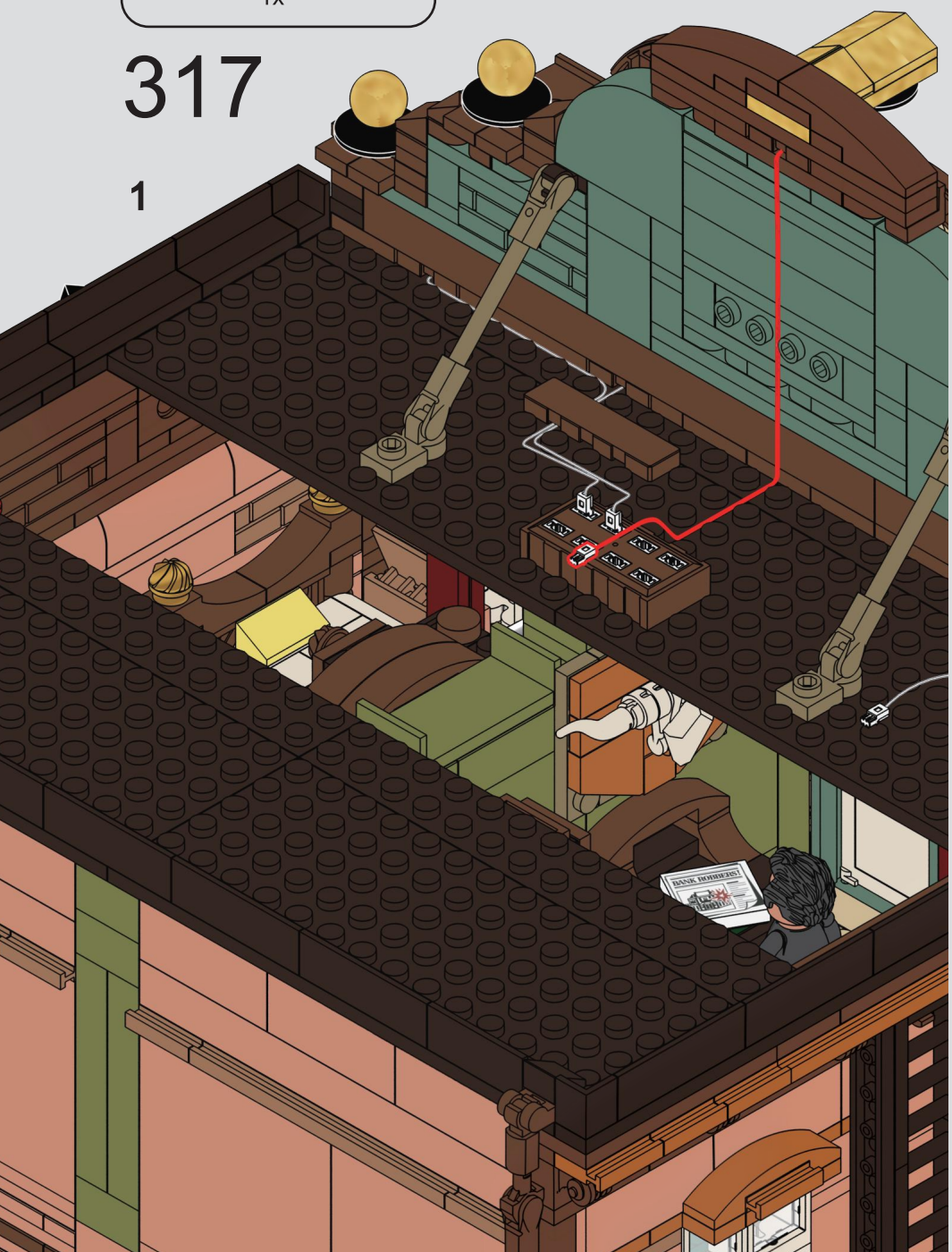

2





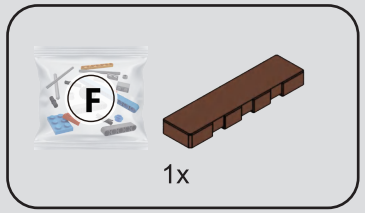

318



2



3



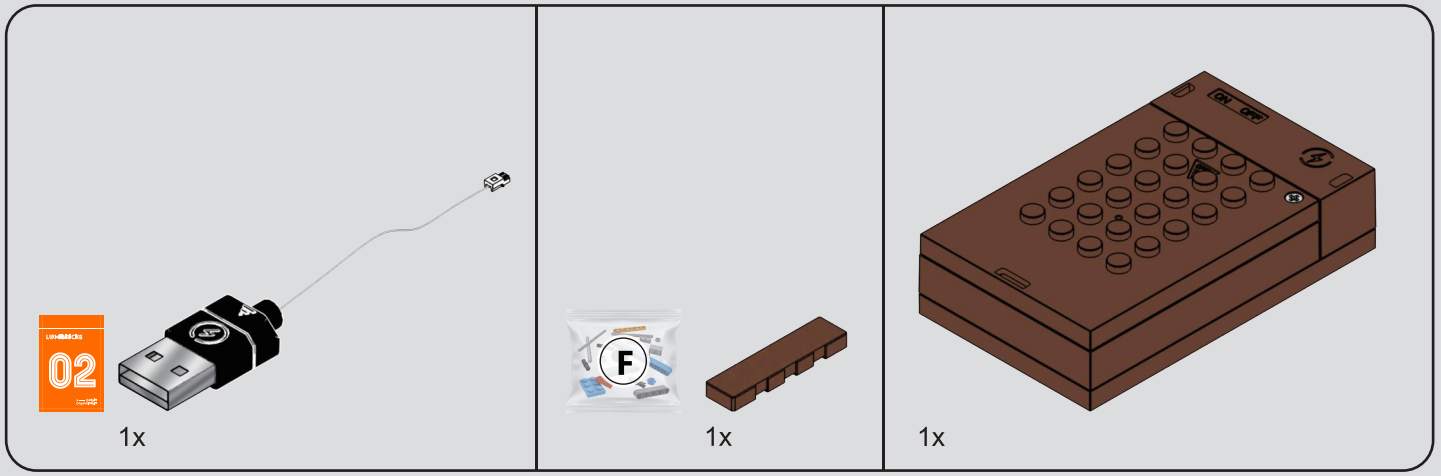

319

1

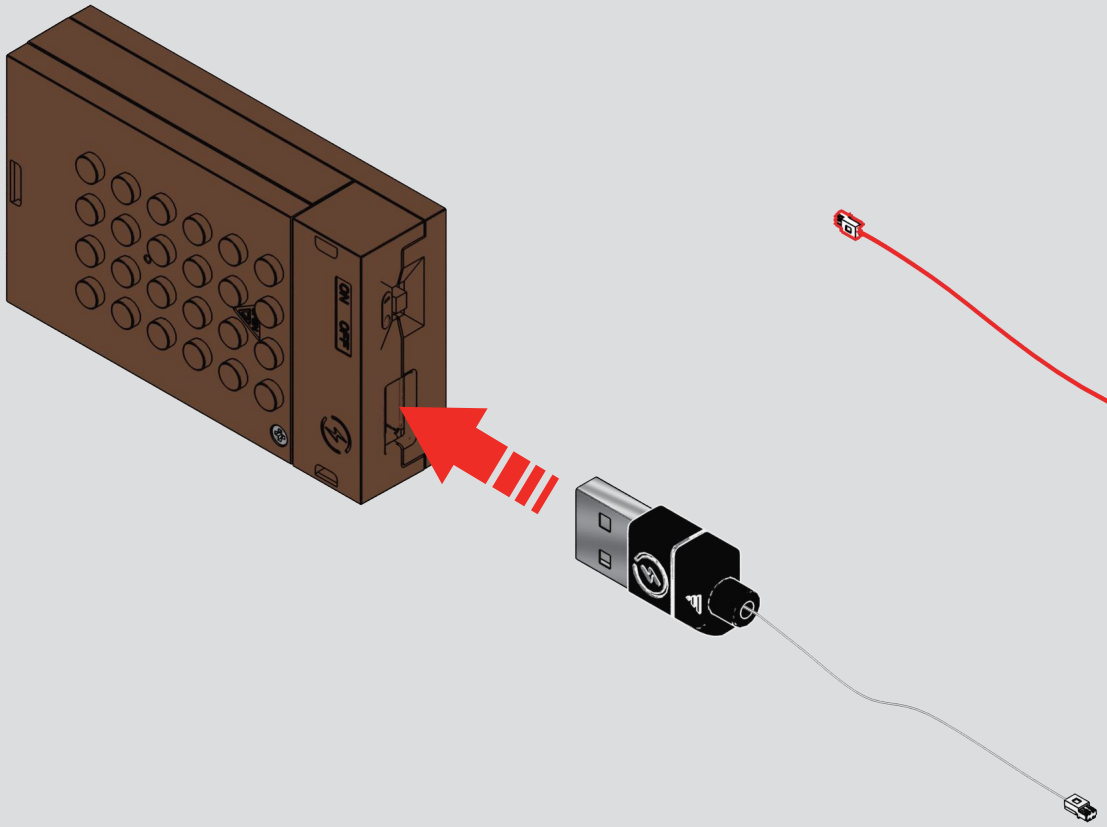

2

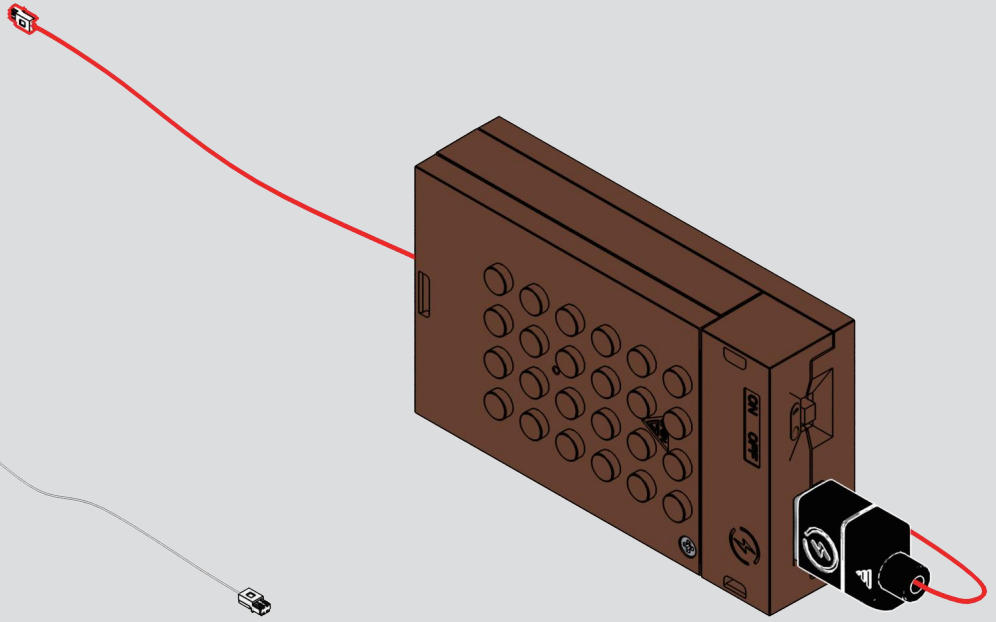

3

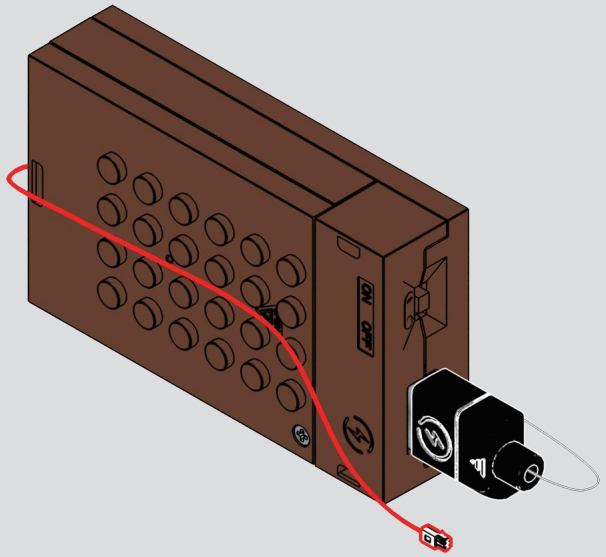

4

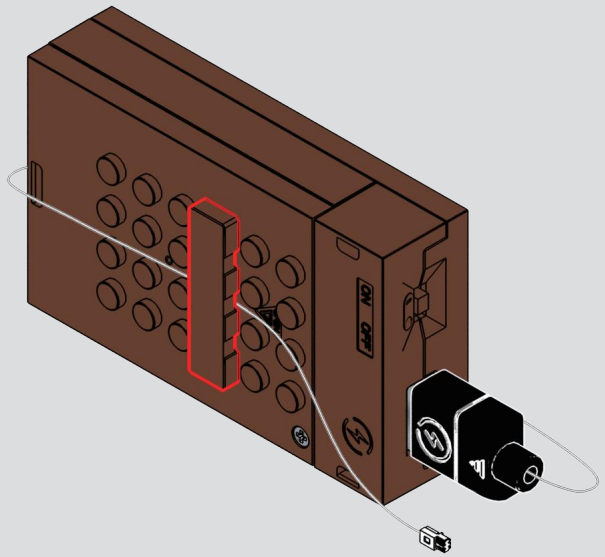

320

1



2



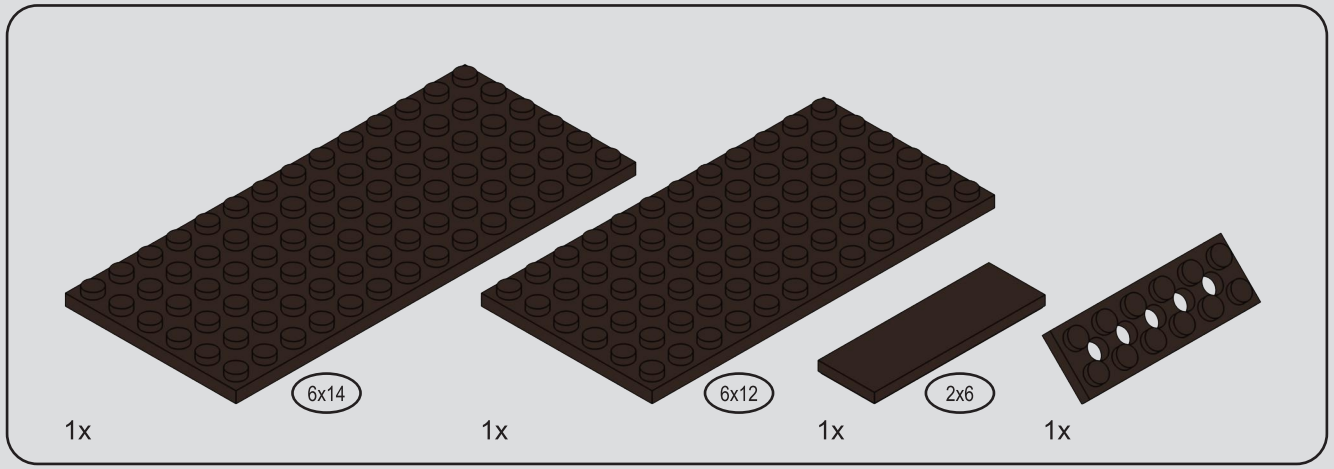

321

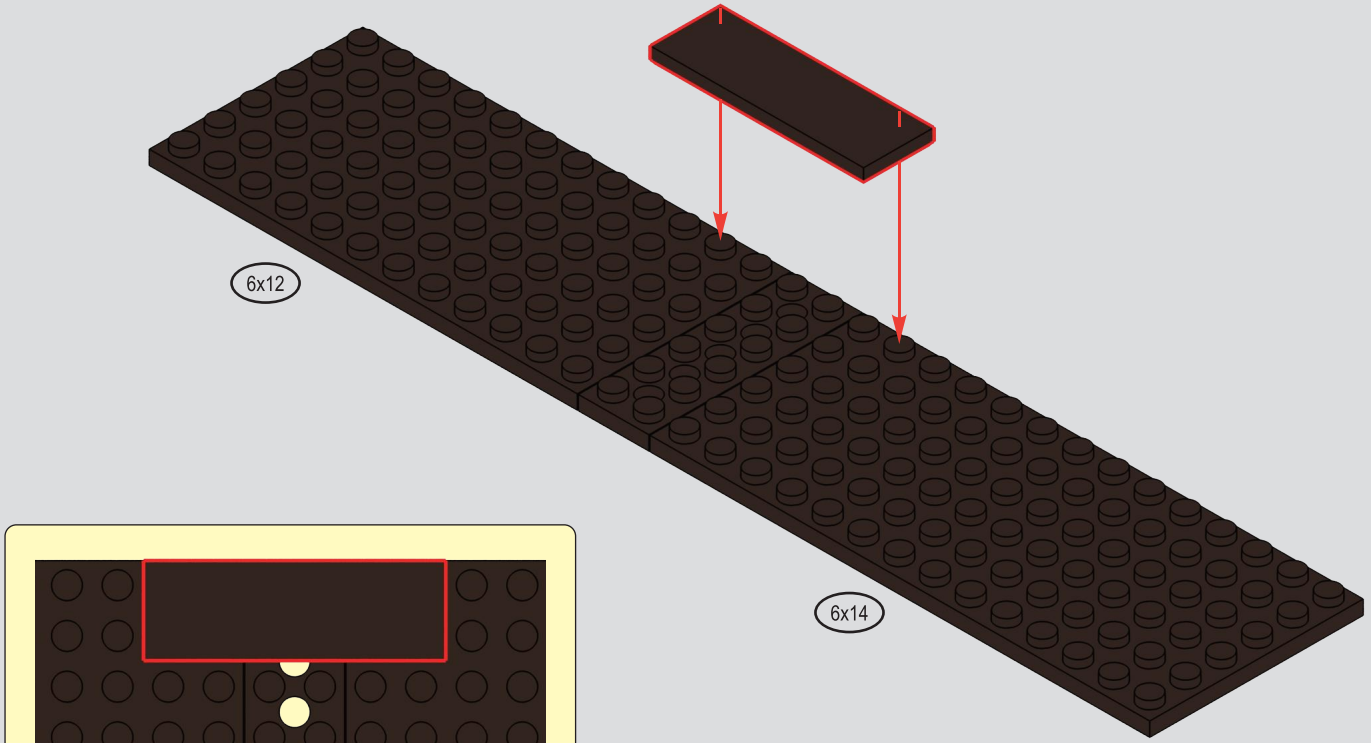

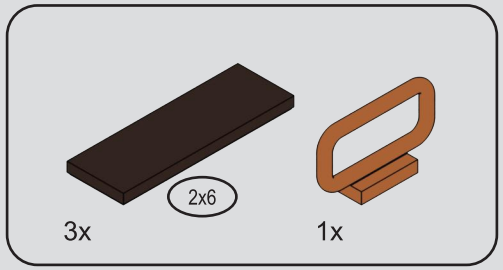

322

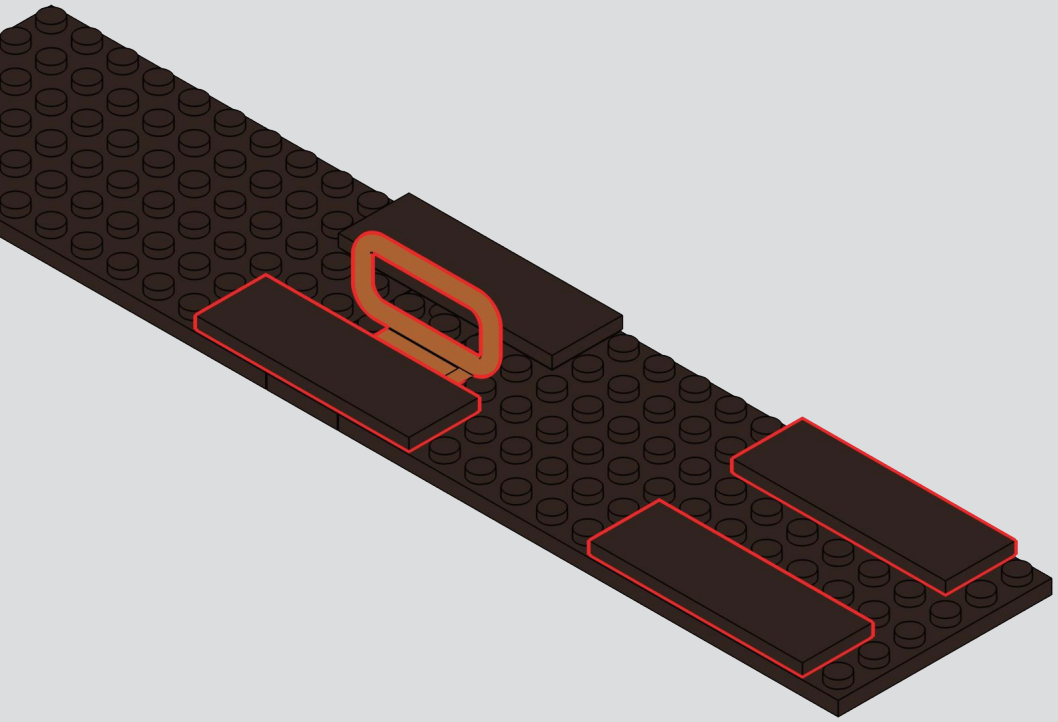

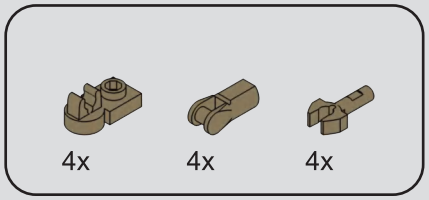

323

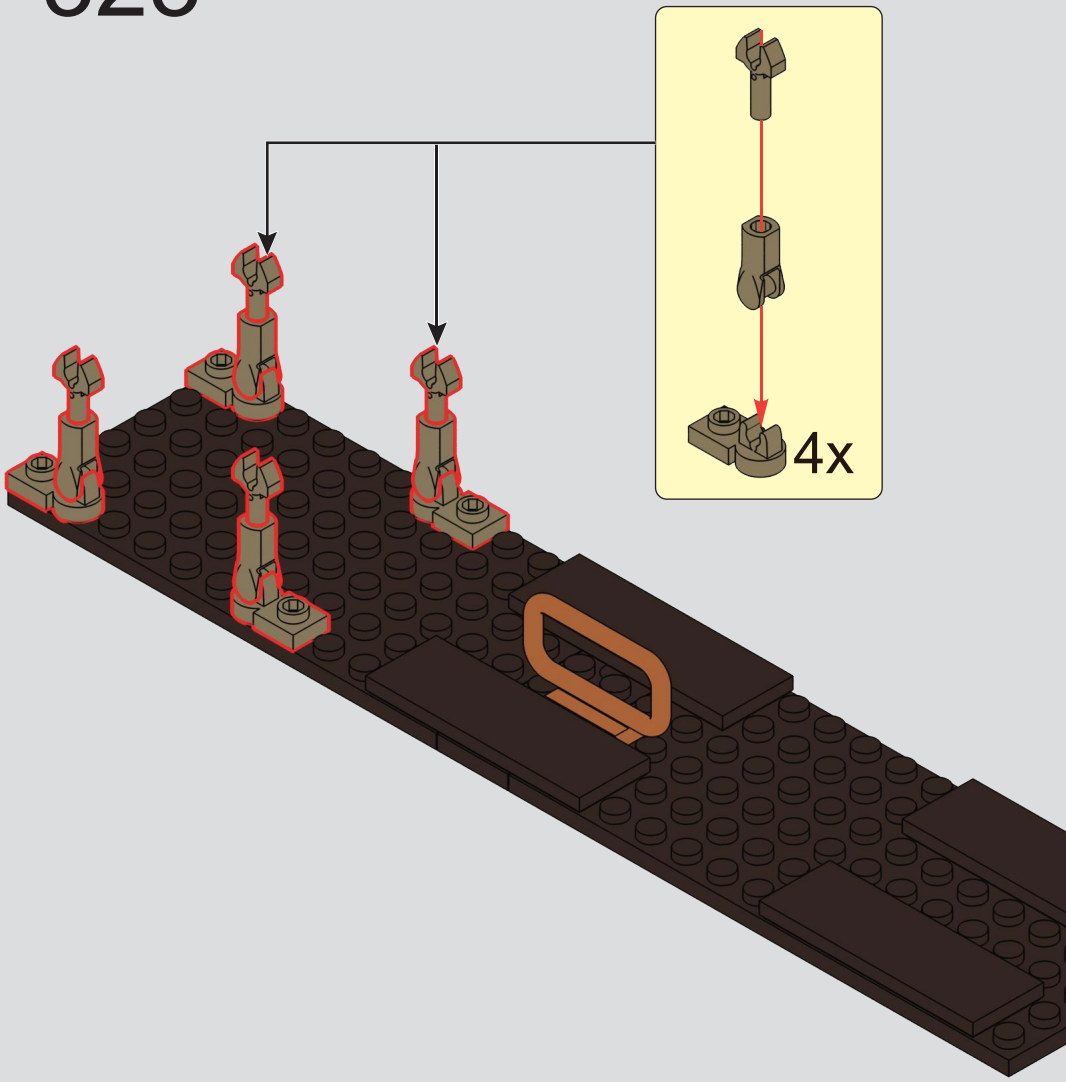

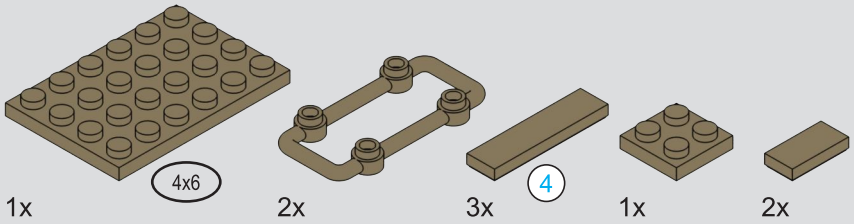

324

1

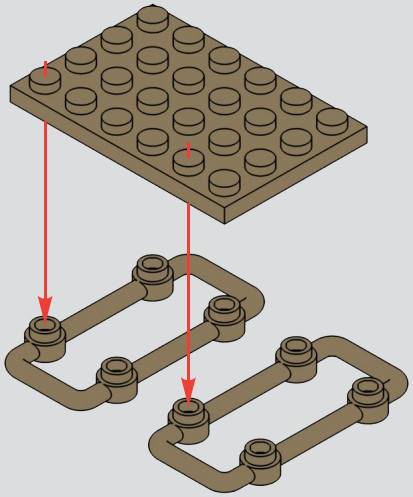

2

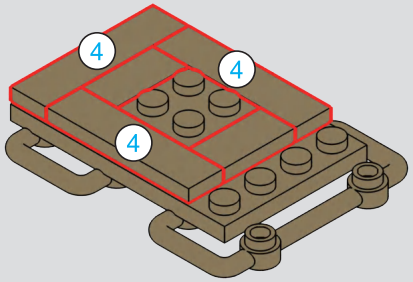



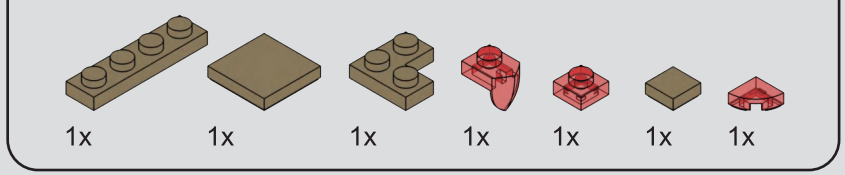

325

1

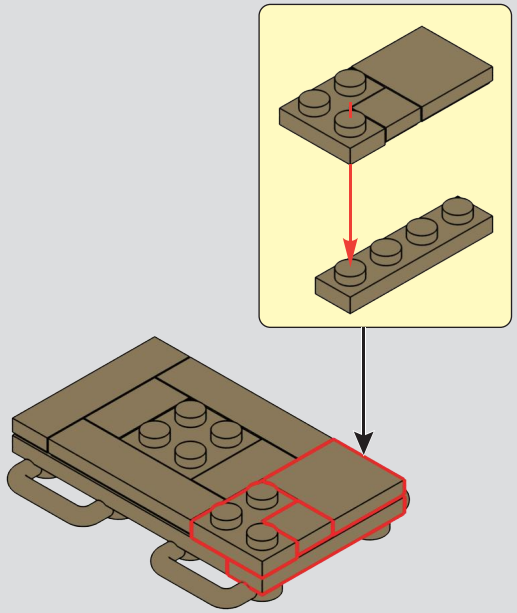

2

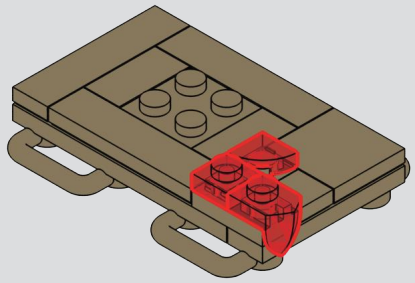

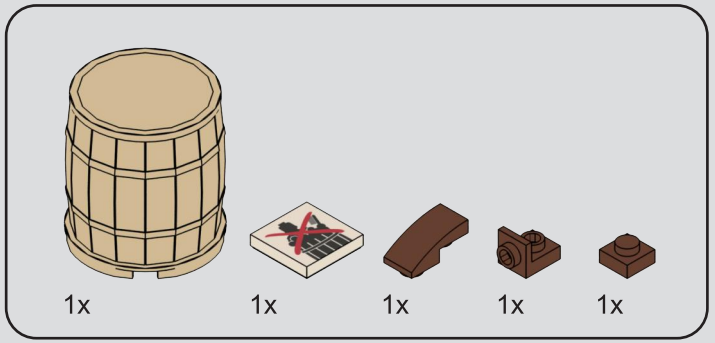

326

1

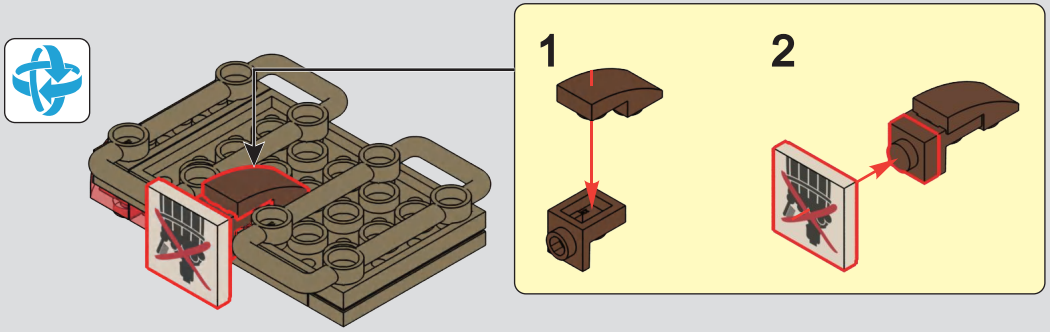

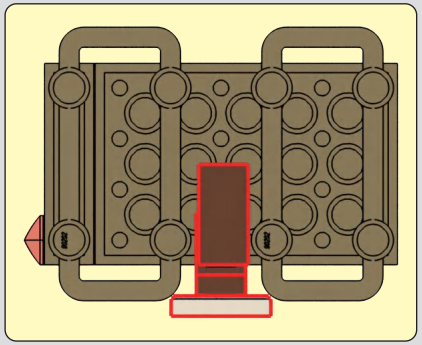

2

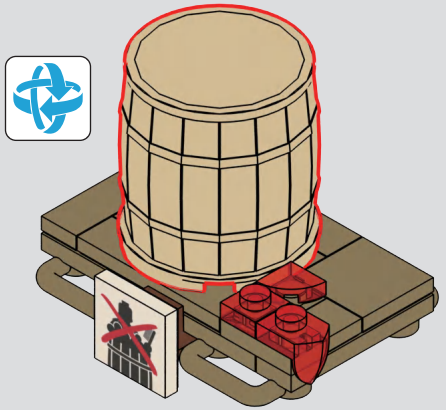

327

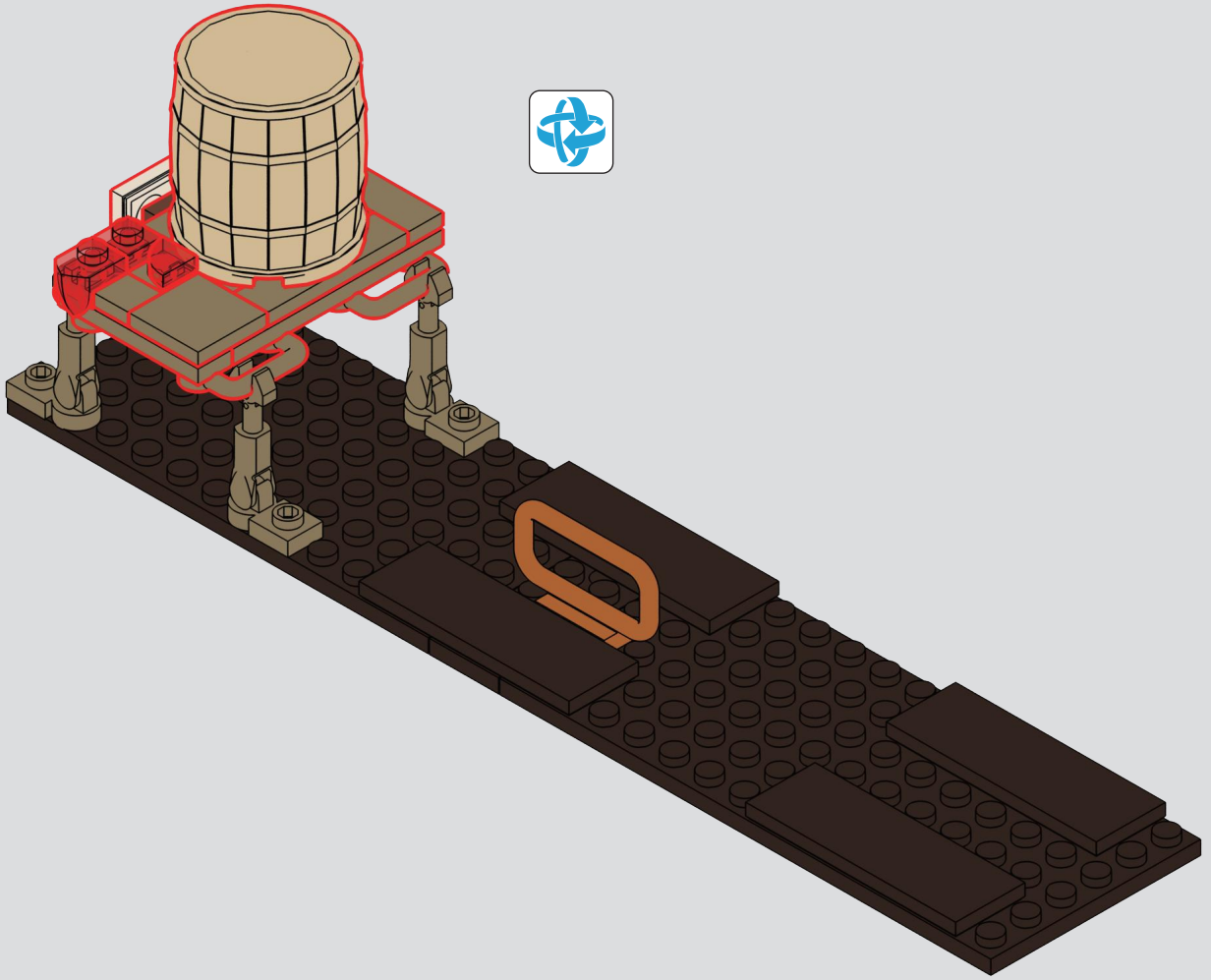

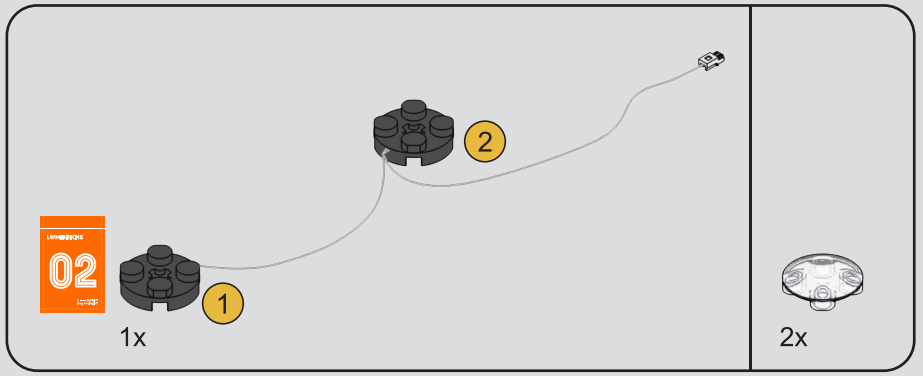

328

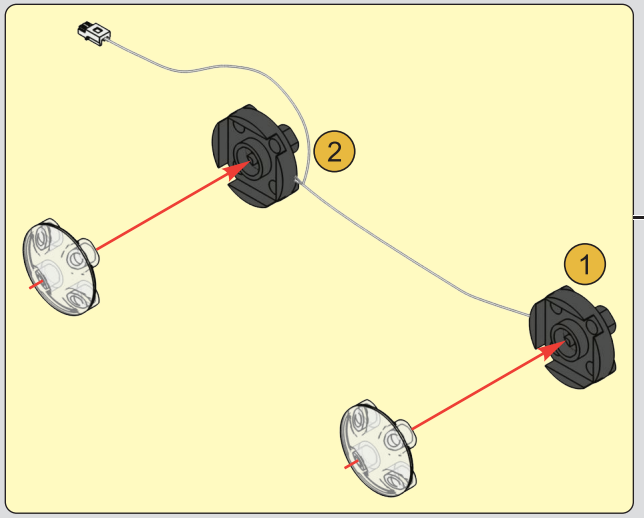

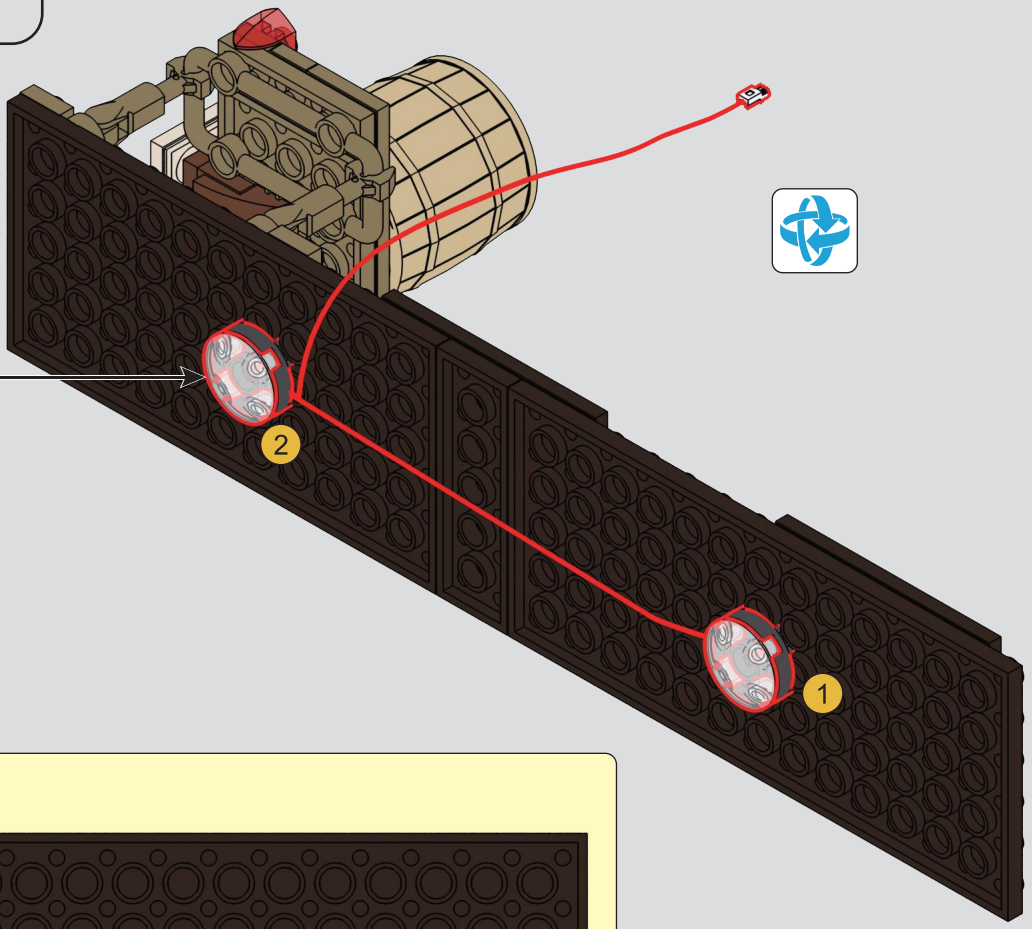

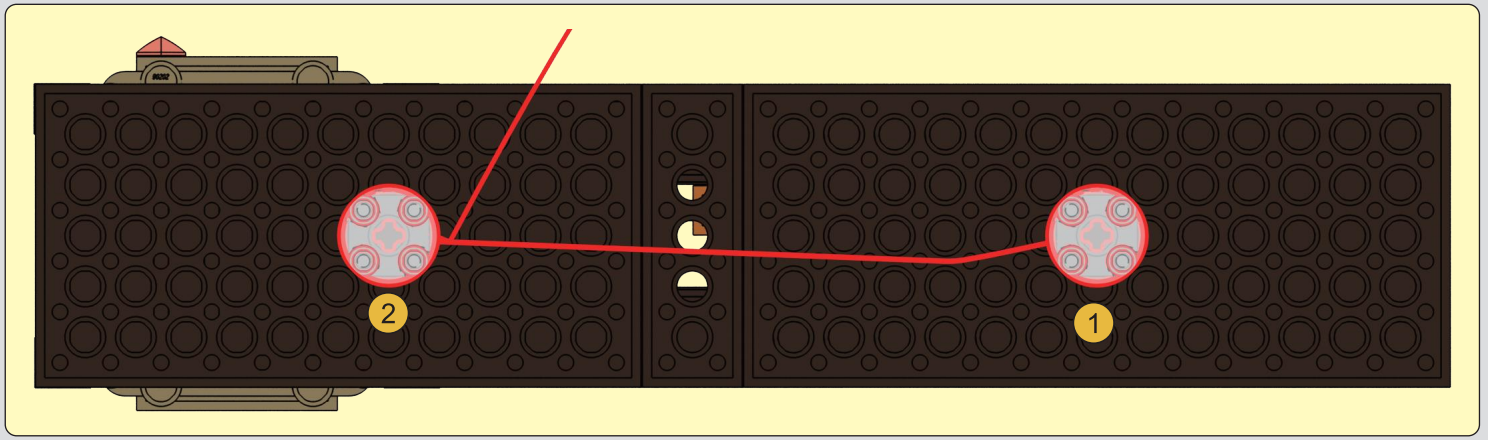

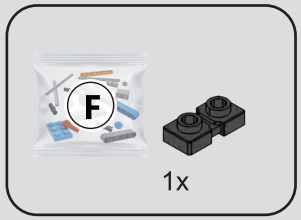

329

1

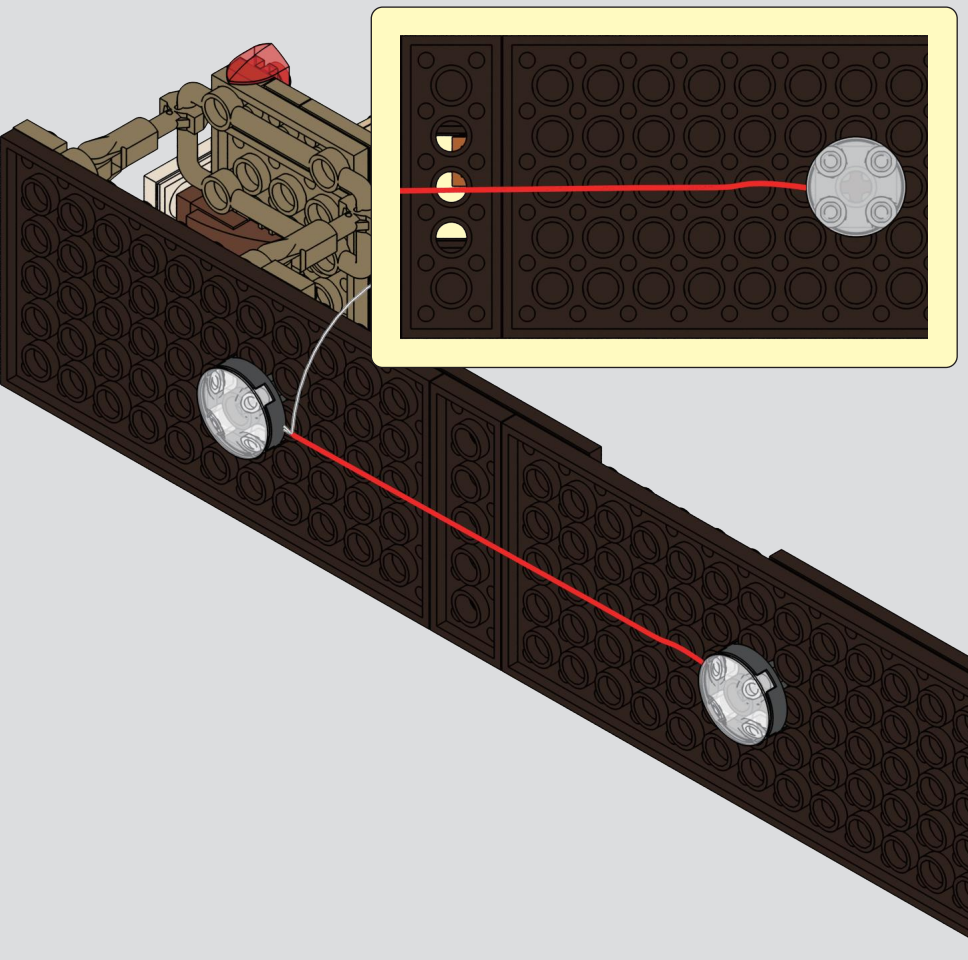

2

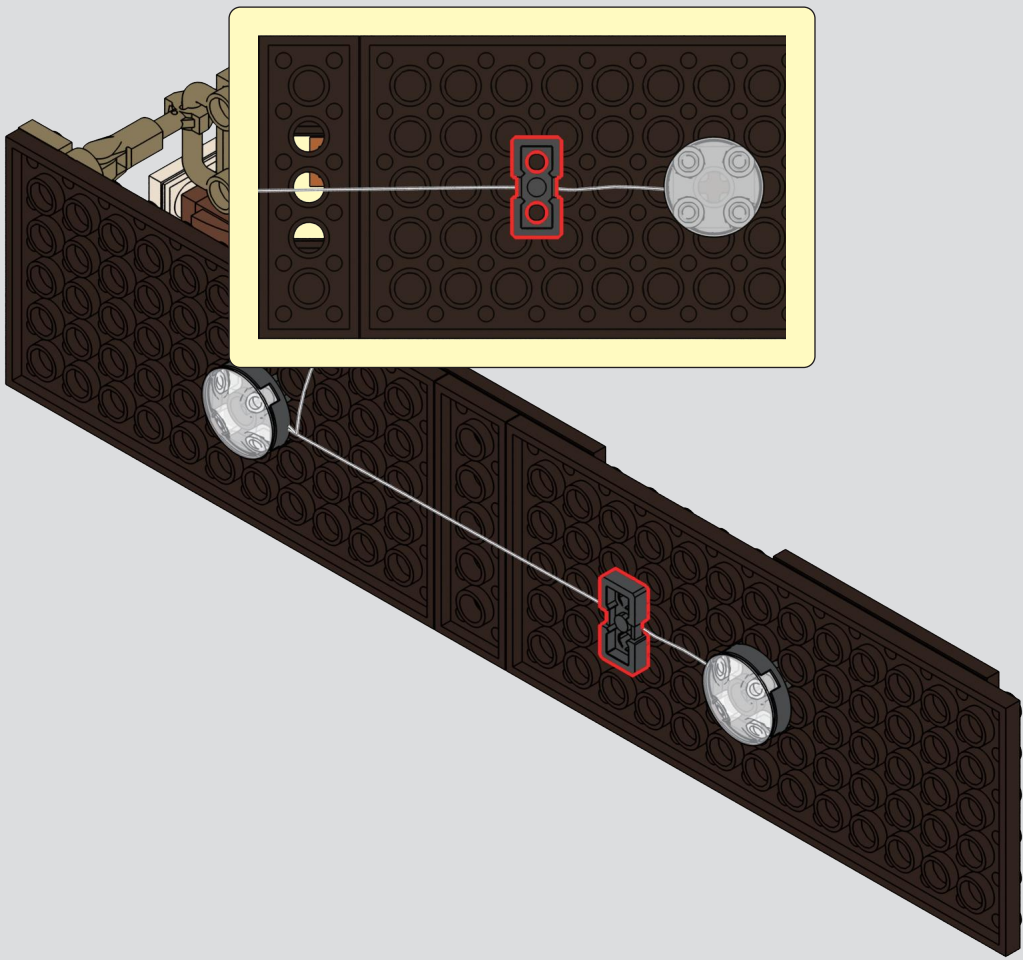

330

1

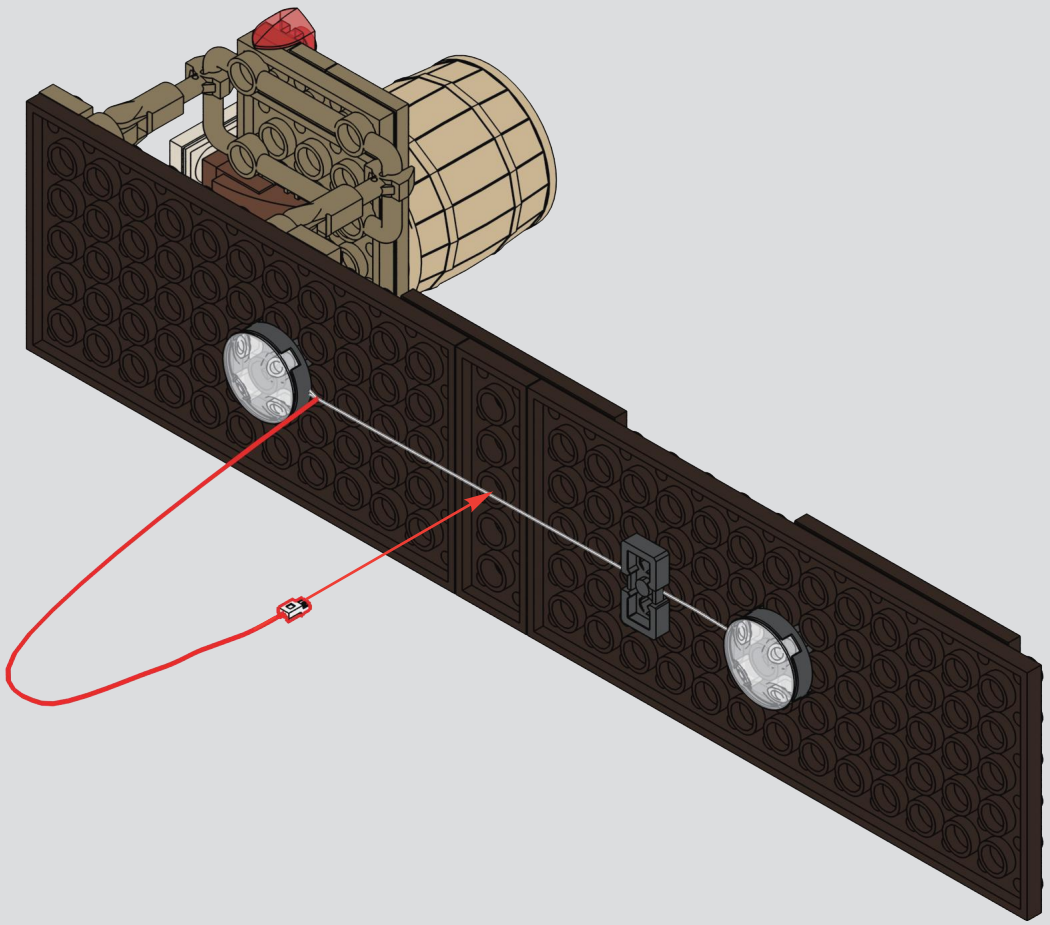

2

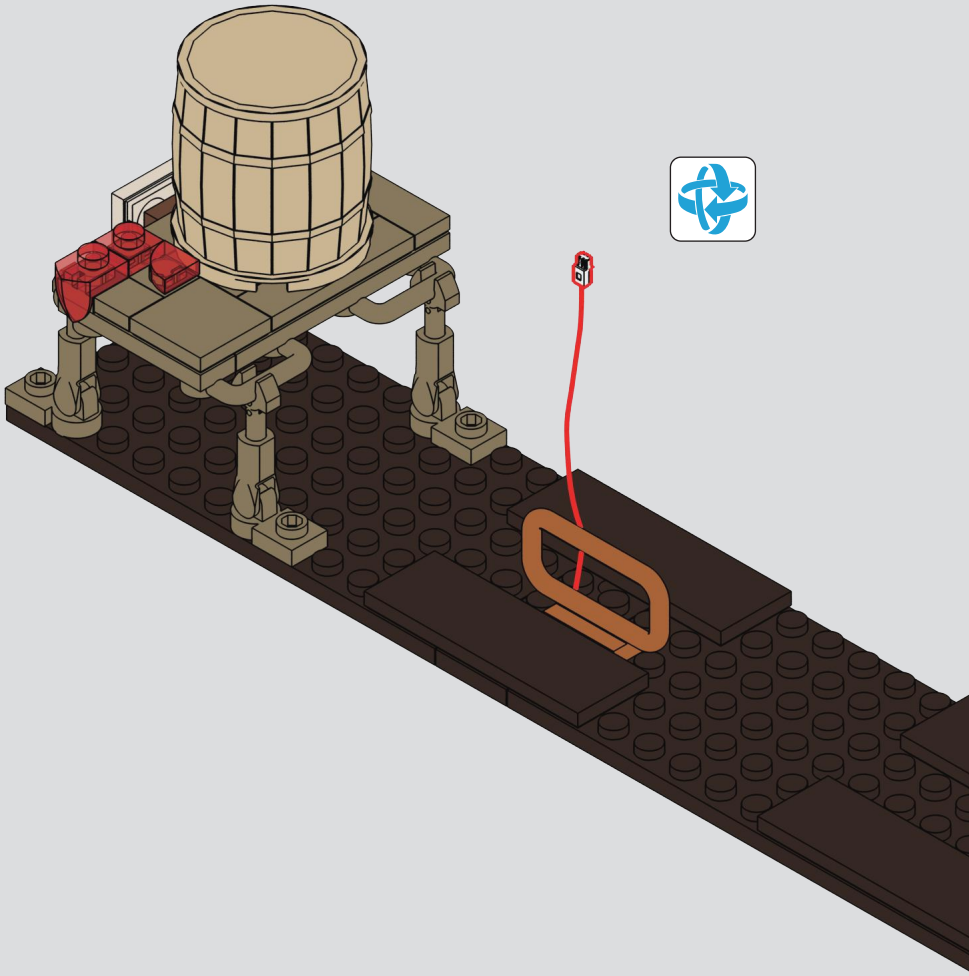

331

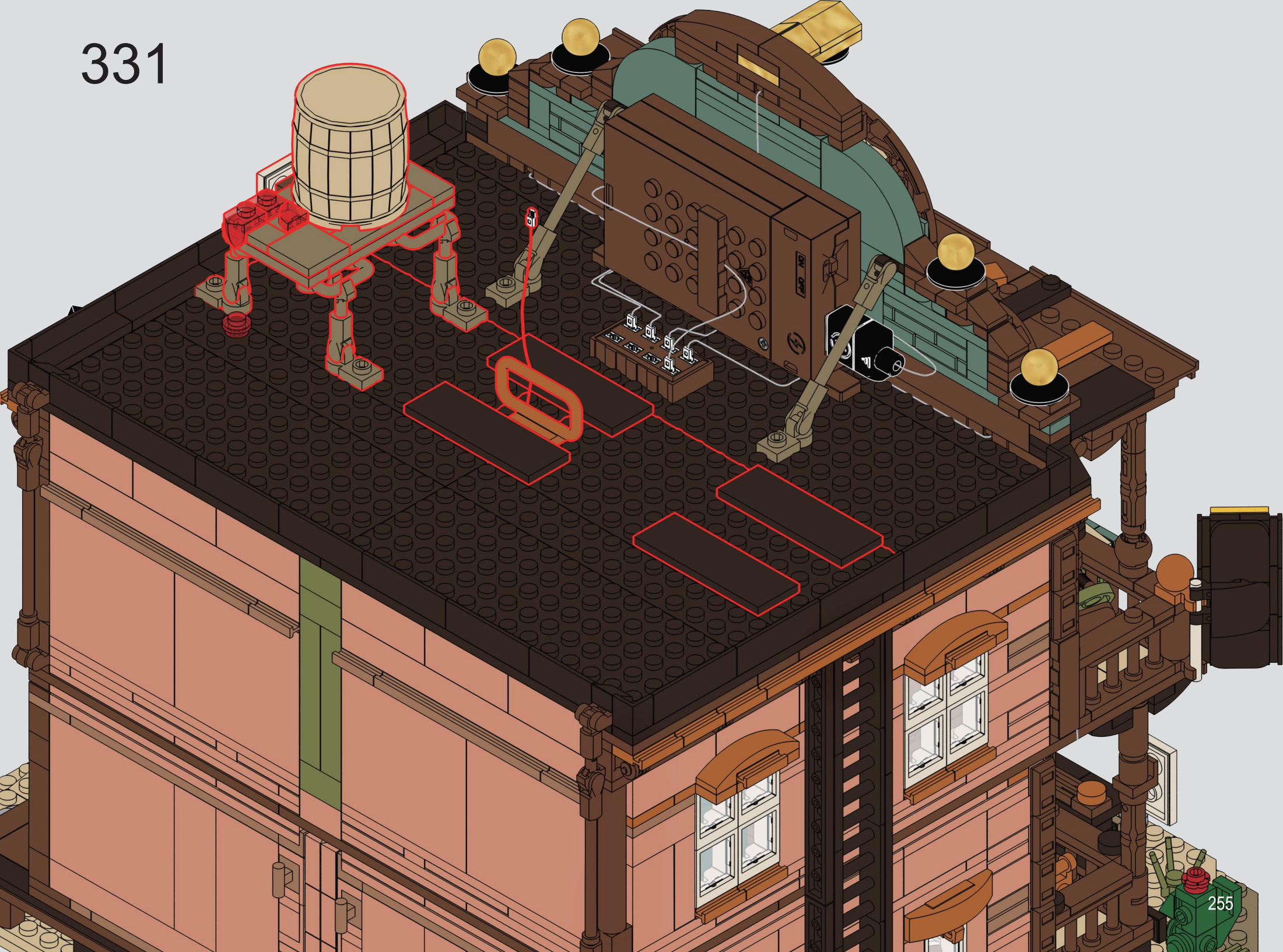




F
1x
333

1

1

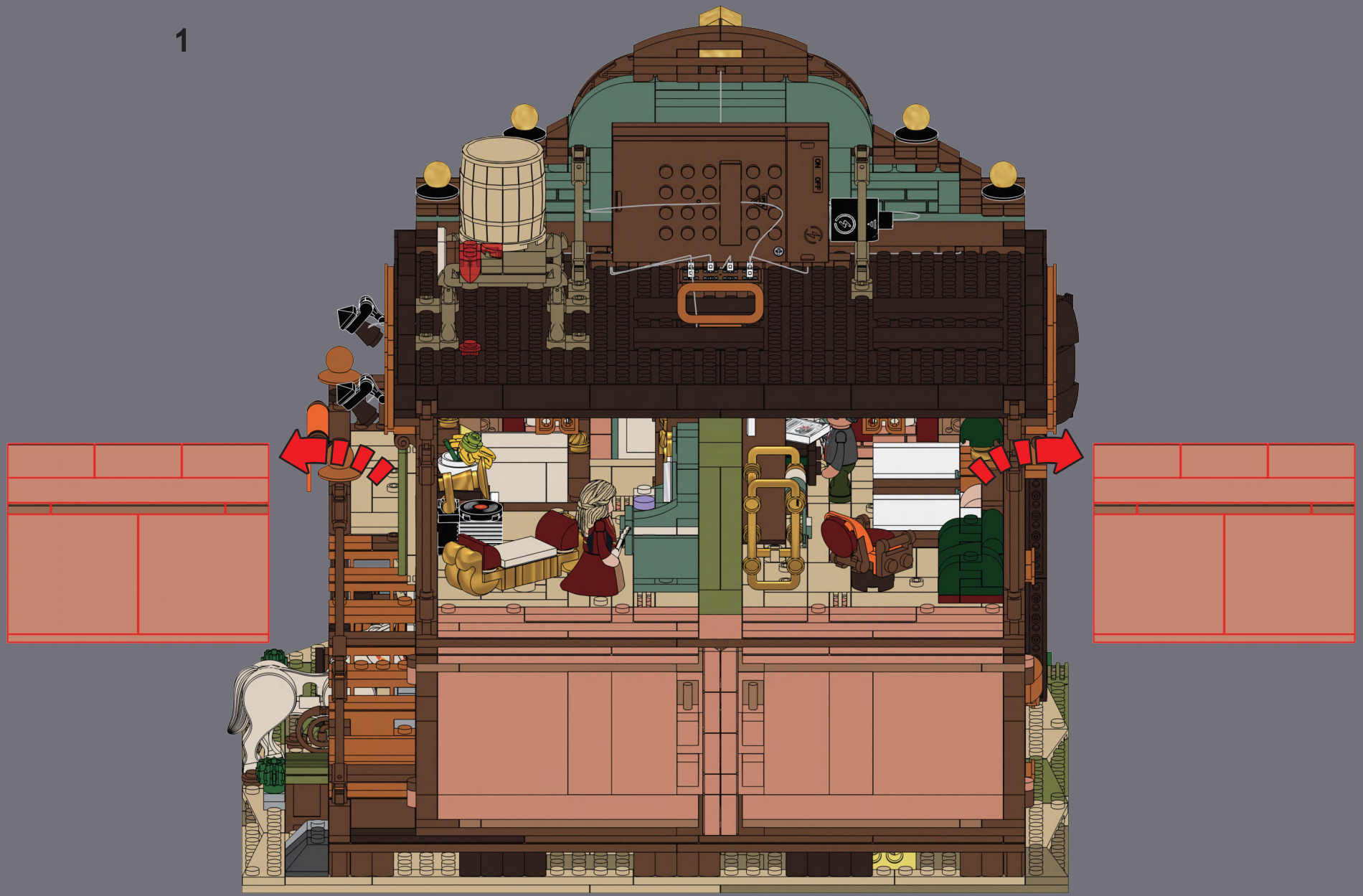

2



2

1



2

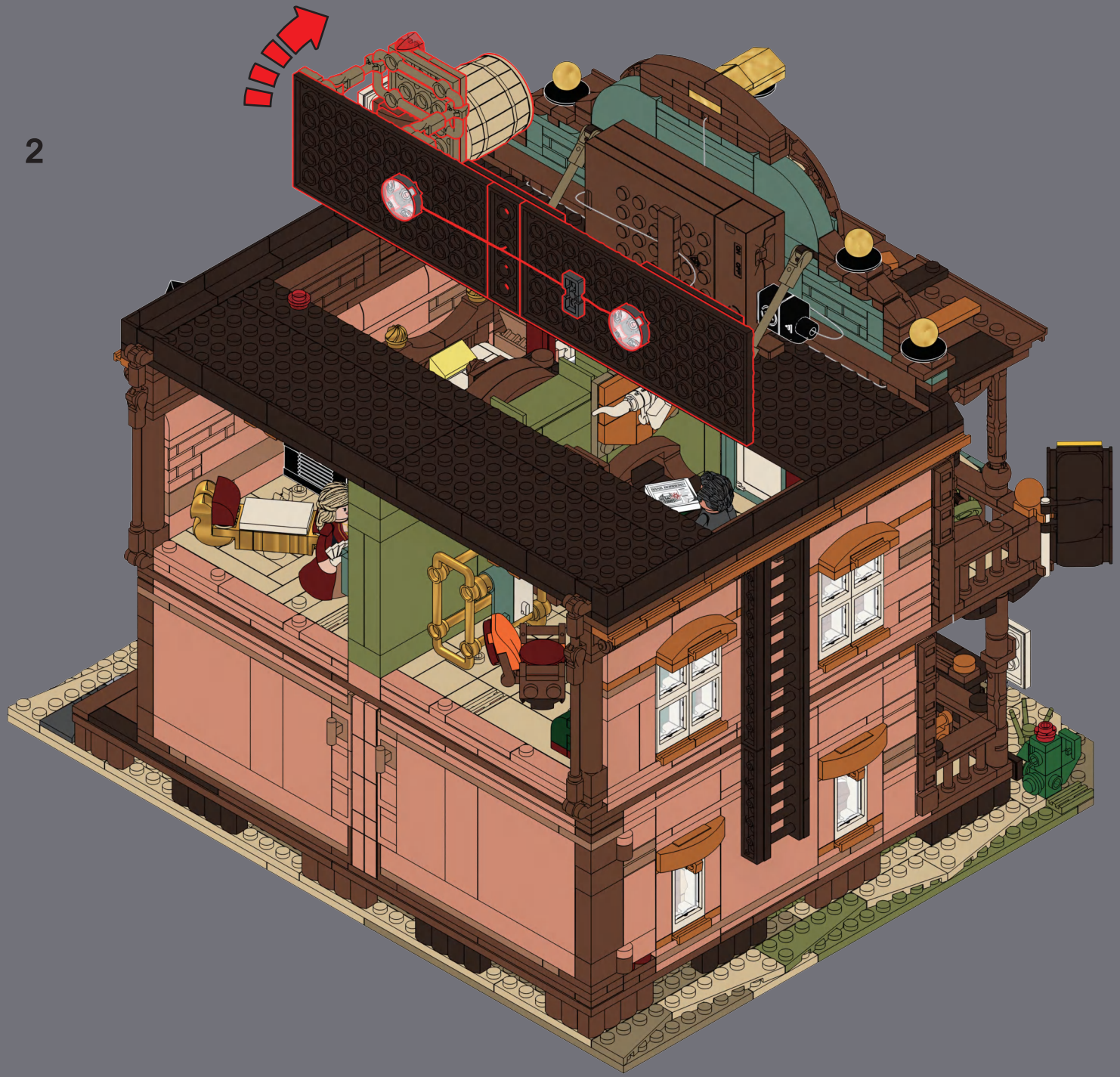

3



4

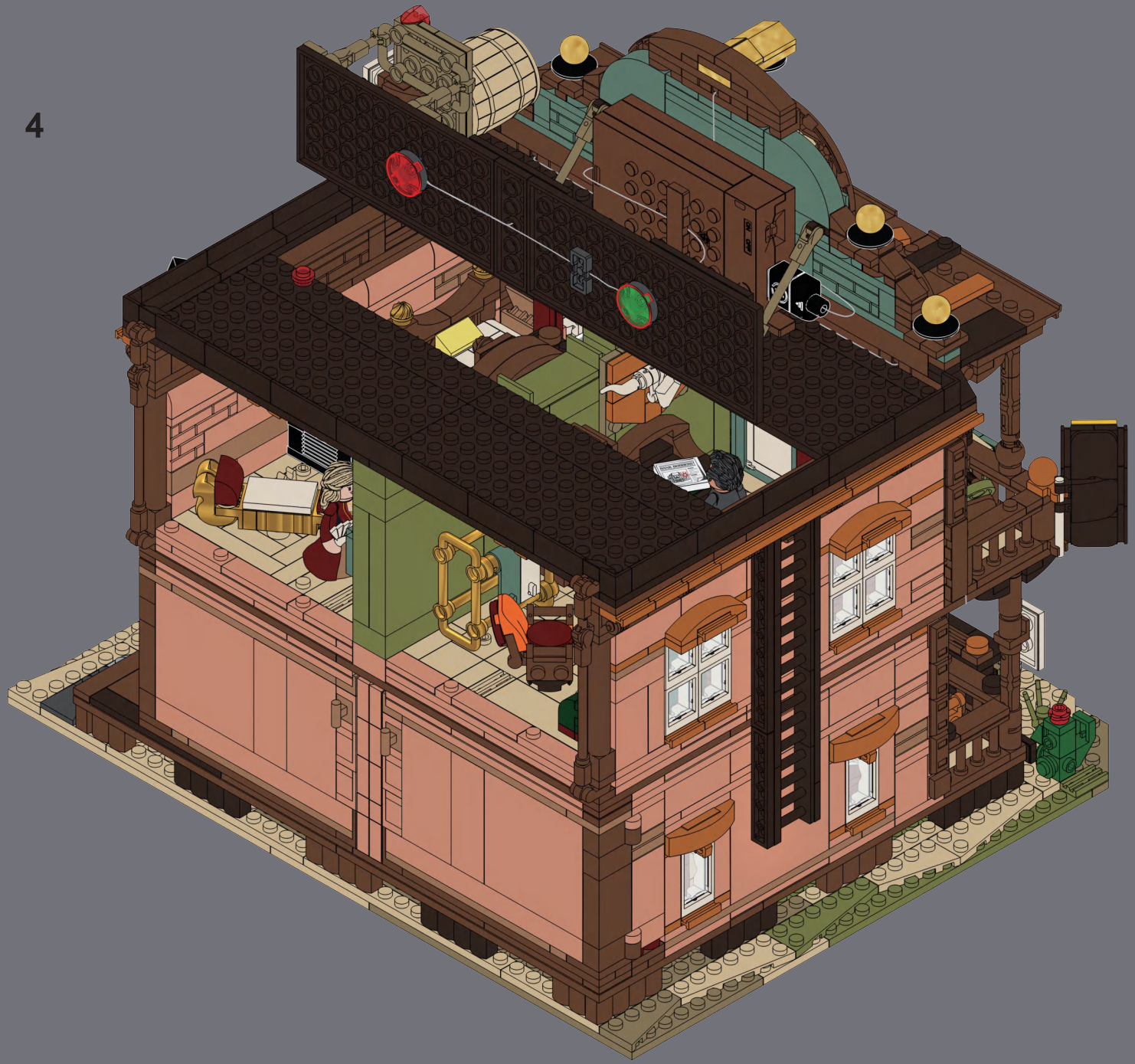

5

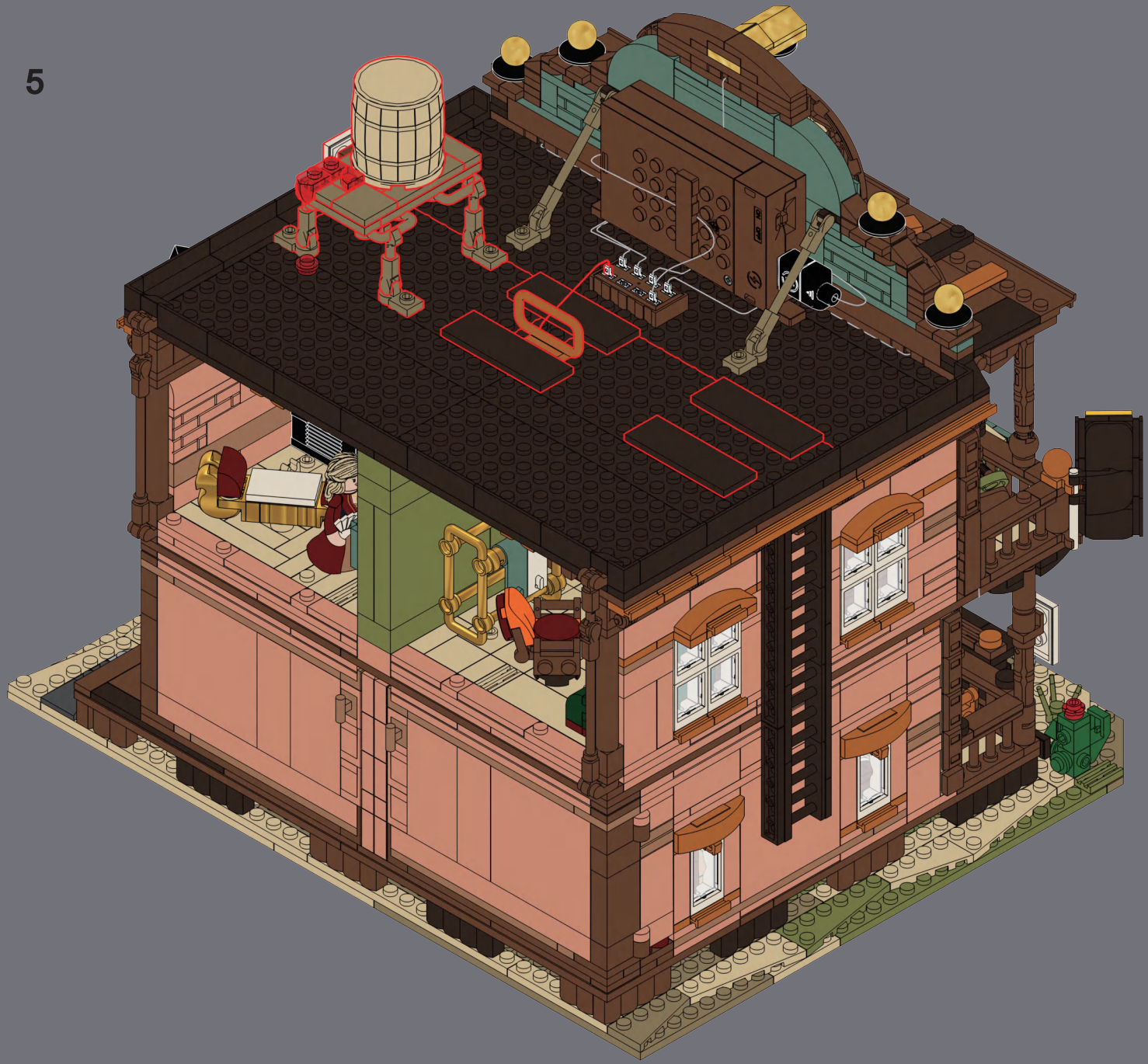

6

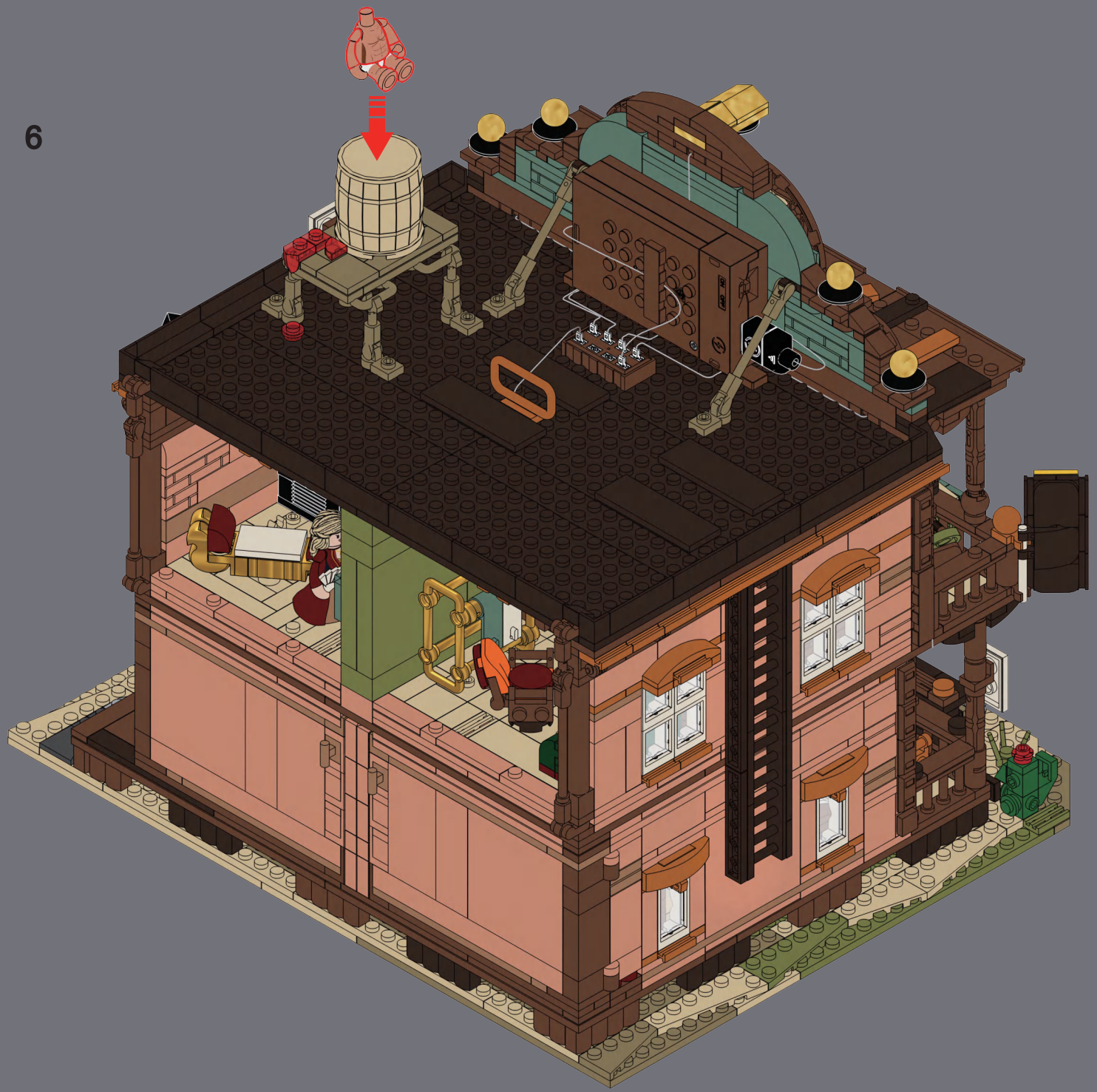

3

1



2



4

1


HOTEL
COLD RUSH HOTEL
WANTED
DEAD OR ALIVE
HOT BATH 50¢
Bed, Hot Bath and Livery
$1.50
AND UP

2



5

1

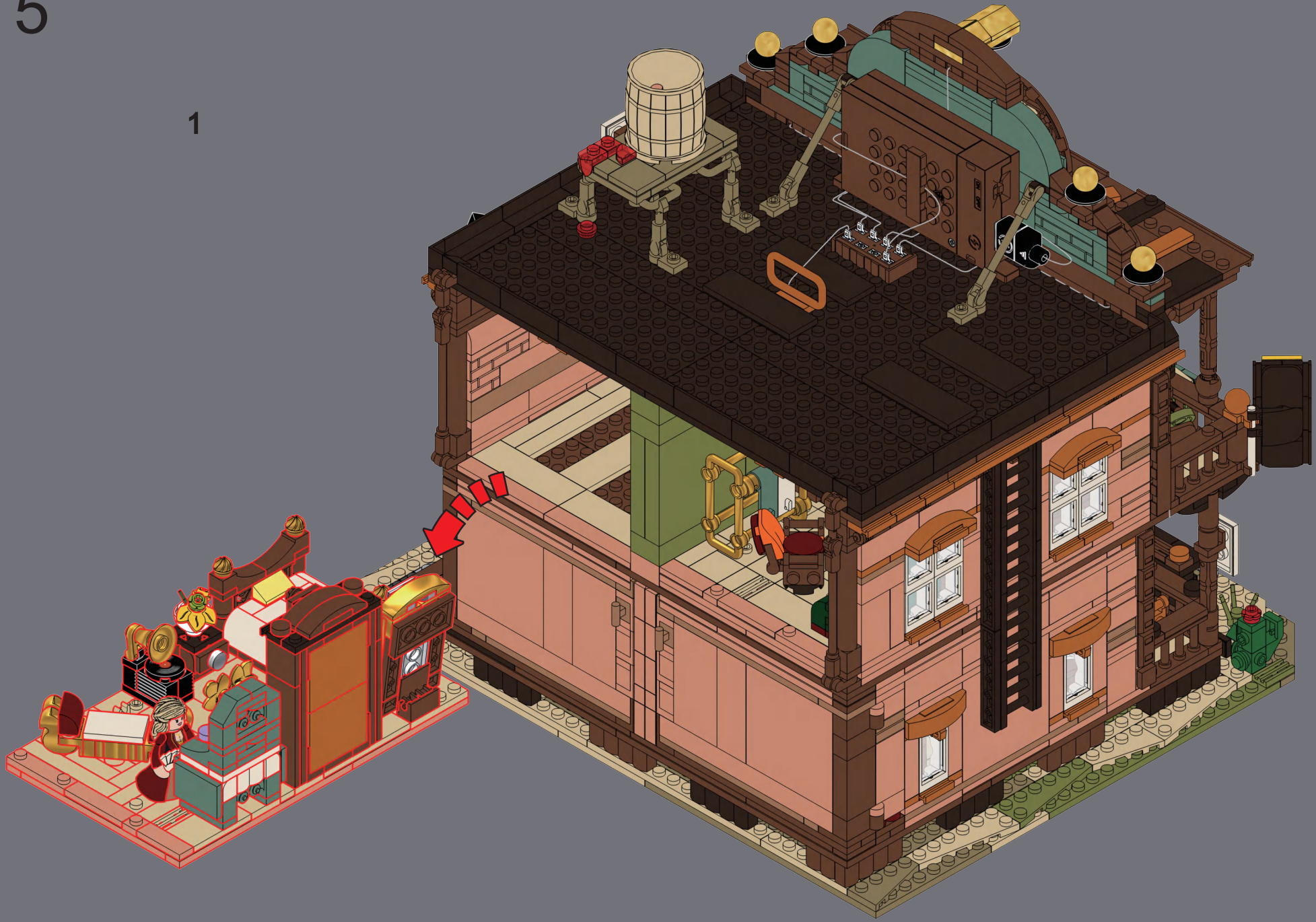

2



6



THE OLD WEST

We would like your opinion on the new product you have just purchased. Your feedback will help shape the future development of this product series.
Please visit: https://www.lumibricks.com/pages/feedback
We sincerely hope you enjoy the product and we can't wait to see you again soon.Please let us know if we can do anything else to help!

西部系列

感谢您对本系列产品的喜爱与支持，如您在拼搭过程中遇到任何问题，均可通过微信扫描二维码联系企微客服寻求协助。
如果您还有其他意见或者建议，也请务必通过企微客服告知我们，期待与您的再次相遇！

企微客服



• THE OLD WEST/西部系列



L9079
Traveling Circus
流浪马戏团



L9097
WESTERN BANK HEIST
西部银行



L9099
Treasure Stagecoach
西部运钞马车



L9102
Sequoia Bandit Camp
红杉树林营地

• THE OLD WEST/西部系列



F9021
Western Saloon
西部沙龙



F9057
General Store
西部杂货店



L9089
Old West Blacksmith
西部铁匠铺



F9044
Old West Post Office
西部邮局

• RETRO HOUSE/复古房屋系列



F9041
Ski Lodge/滑雪小屋



F9035
Moutain Cabin/山地小屋



L9075
Bamboo House/竹林小屋



F9018
Hunting Cabin/狩猎小屋



F9013
A-Frame Cabin/A型框架木屋



FH9004
Lakeside Lodge/湖边木屋

Lumibricks and Lumibricks logo are trademarks of the Lumibricks group.

WWW.LUMIBRICKS.COM

如果您遇到任何问题，请通过以下方式与我们联系：

天猫 小红书

lumibricks灯搭官方旗舰店

会员中心