Ore Factory
L9101
3138PCS
16+

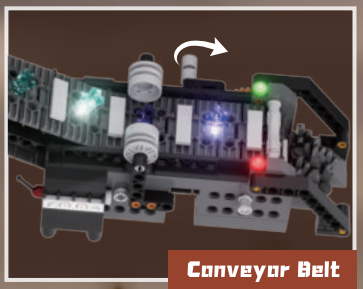

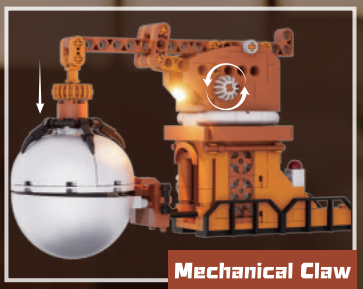

ORE FACTORY
STEAMPUNK WORLD



Scan the QR code
for a PDF instruction

扫码关注公众号
获取电子版说明书

ABOUT LUMIBRICKS

Welcome to Lumibricks, where imagination meets illumination in the brick world!

Formerly known as FUNWHOLE, the world's first lighting bricks manufacturer, Lumibricks continues its legacy as a trailblazer in the world of building brick sets with a unique twist - integrated lighting that transforms every creation into a radiant masterpiece.

Every Lumibricks' set celebrates the joy of building and the magic of illumination. Whether you're crafting intricate architectures or imaginative scenes, the design details and lighting features bring the sets to life, and also bring you joy and shine whether it is the day or night.

At Lumibricks, we believe in the power of light to transform and elevate. With our slogan, "Delight day and night," we invite you to explore the possibilities of illuminated brick sets. Discover a hobby that doesn't just shine - it glows with your inner creativity.

欢迎来到Lumibricks灯搭的乐园

在这里，我们不仅仅是玩具制造商，我们还是创造快乐的艺术家。

自2014年诞生起，Lumibricks灯搭（原FUNWHOLE）就坚守一个独特的愿景：在日与夜的交替中，为我们的玩家揭示积木之美的无限可能。

作为全球领先的灯光积木品牌，本着充分表现积木套装整体之美的初衷，Lumibricks致力于灯光积木套装产品的开发，将积木与灯光合为一体。

Lumibricks不仅仅是一套普通的积木，更是代表了一种全新的玩乐方式，每一块积木，每一束光线，都承载着我们带给全球数百万家庭更多欢笑的承诺。

我们相信，积木有灯，生活有光，让Lumibricks与你一起，拼搭出更多乐趣，创造属于你的灯光宇宙。

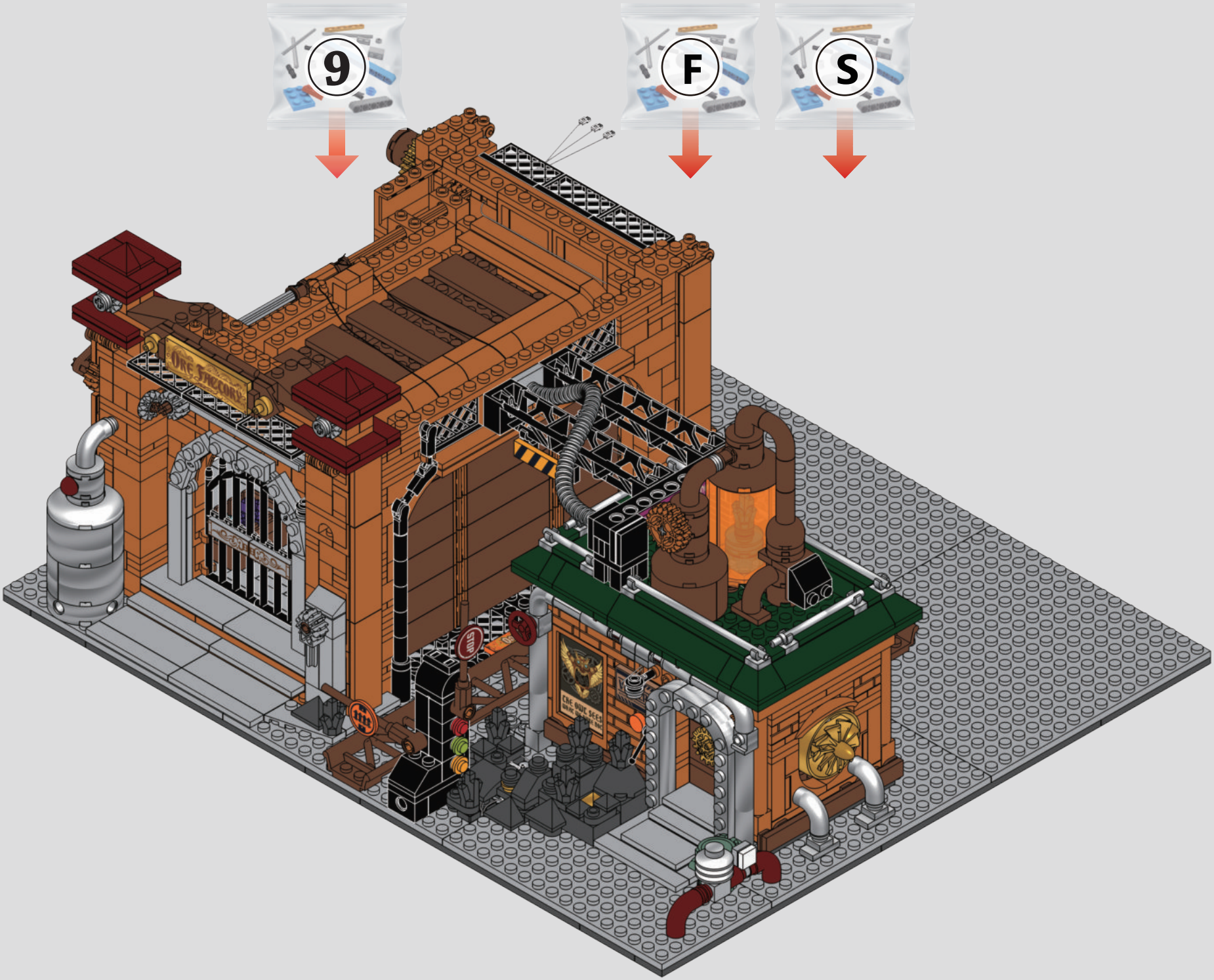
9
F
S
ORE THEORY
STOP

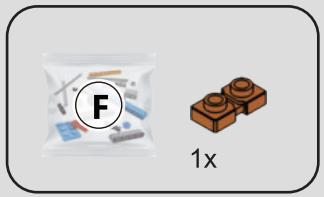

1

1

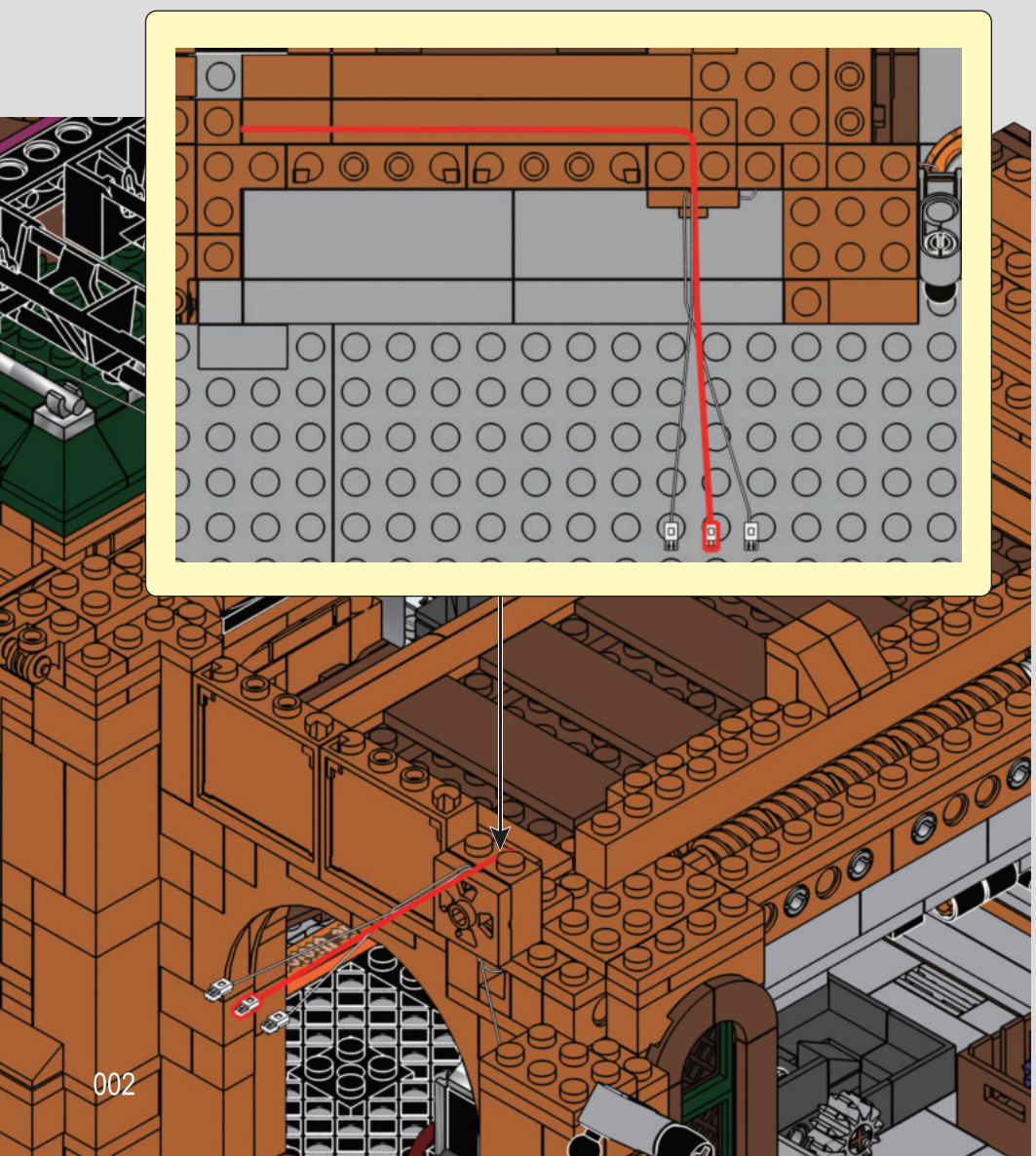

2

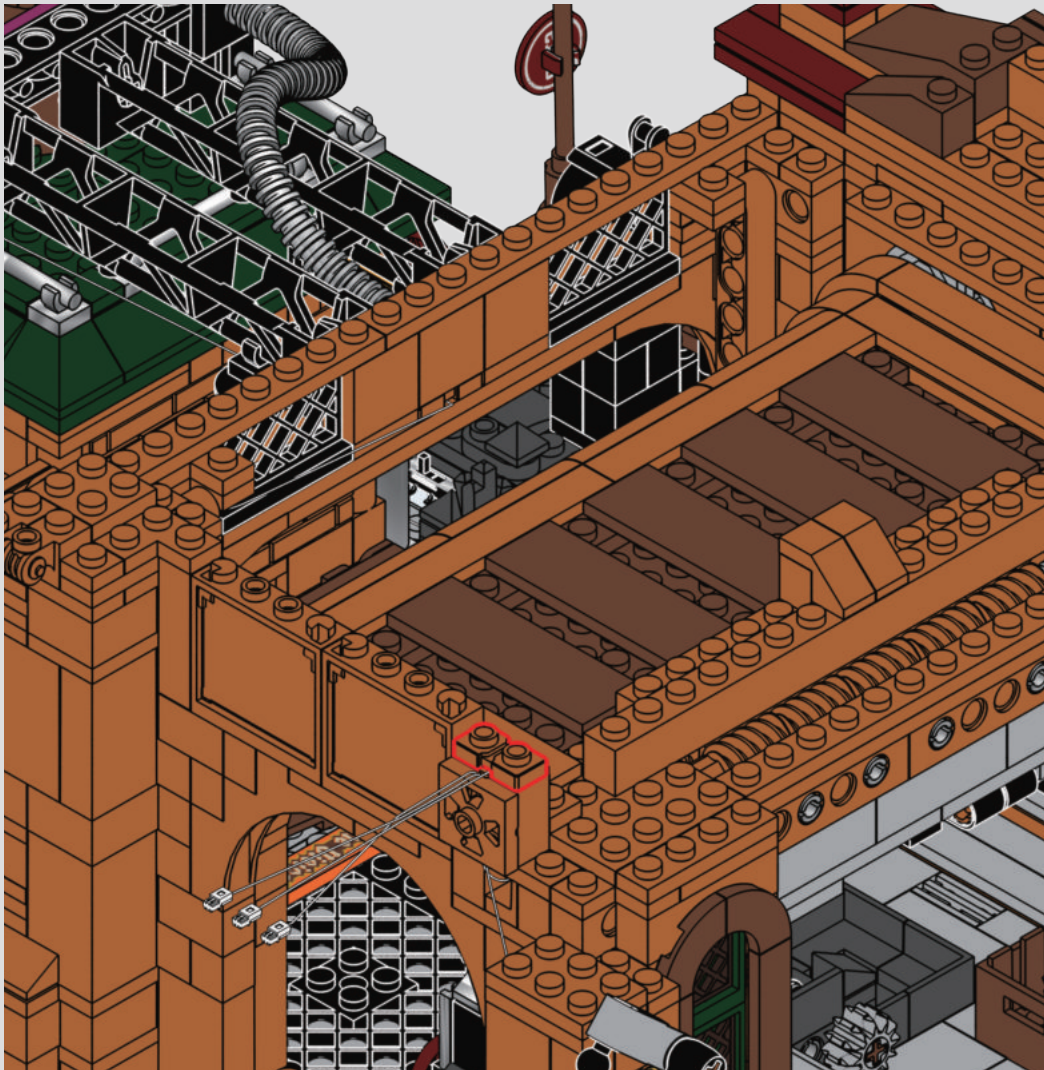

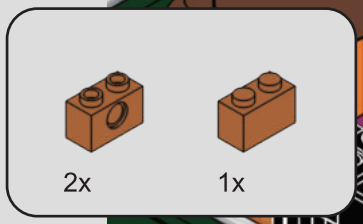

2

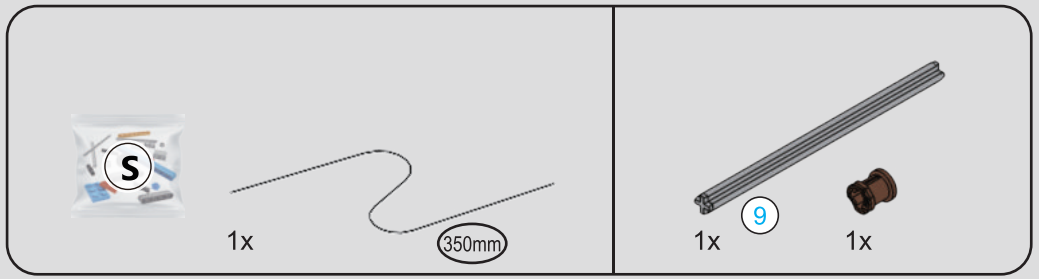

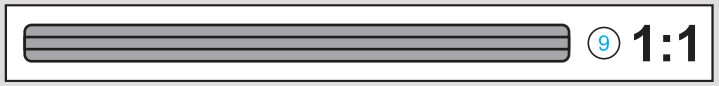

3

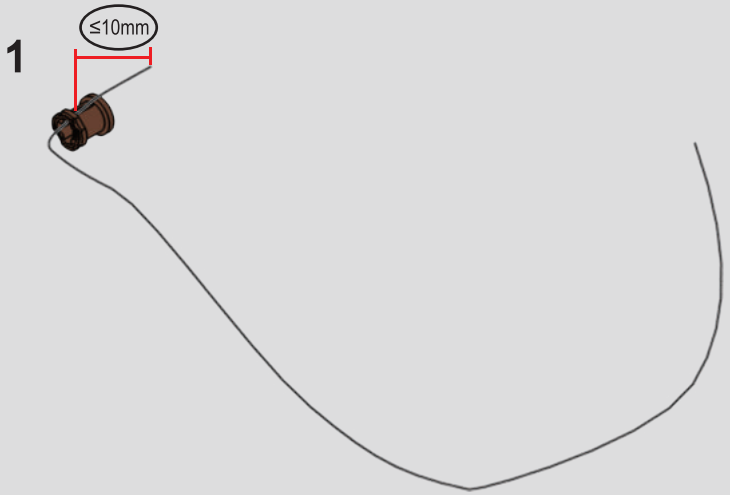

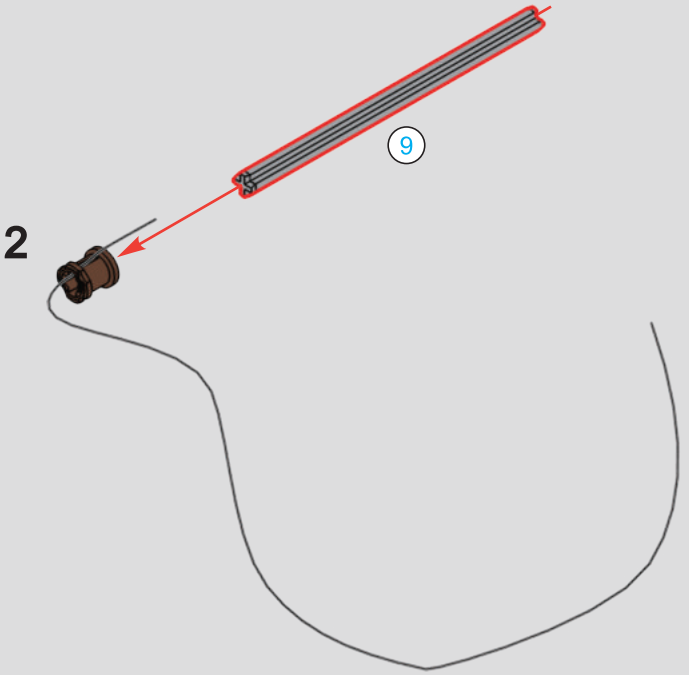

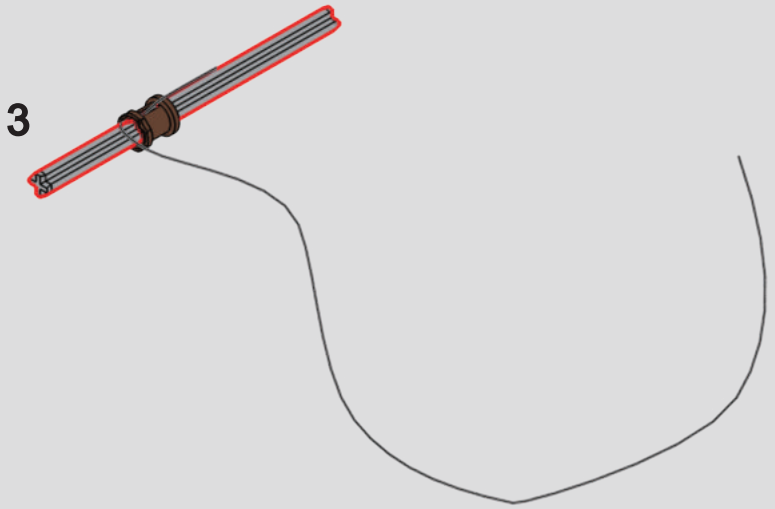

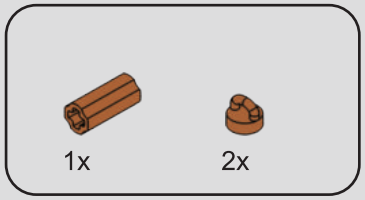

4

1

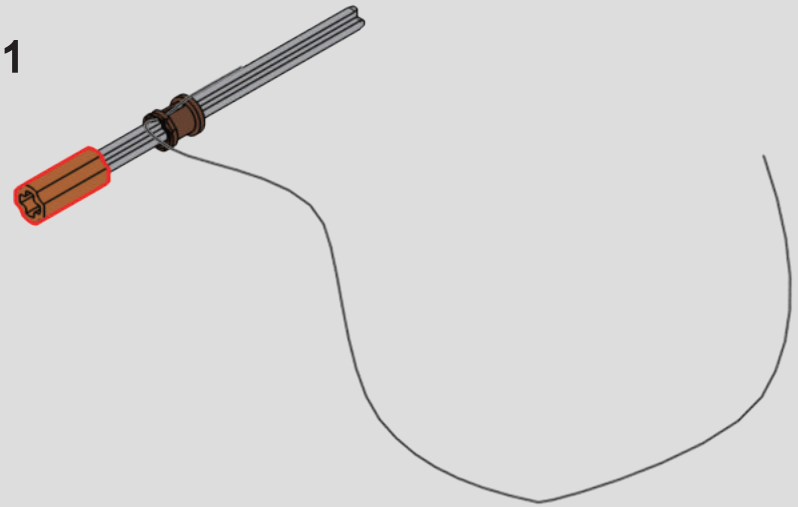

2

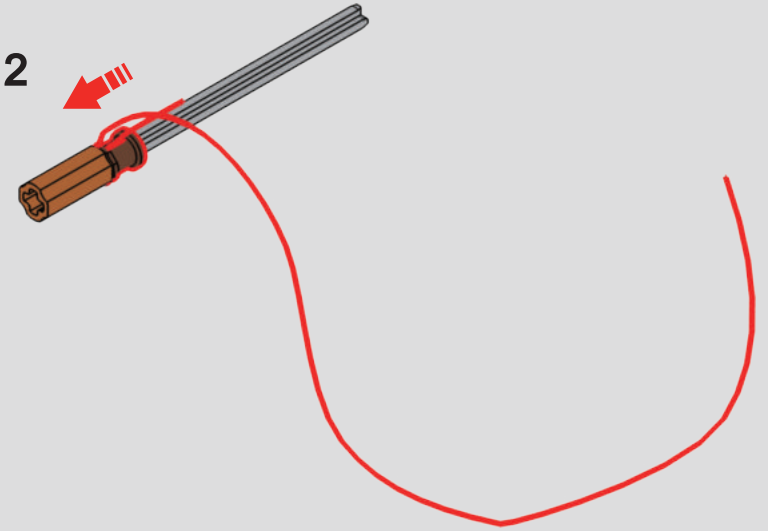

3

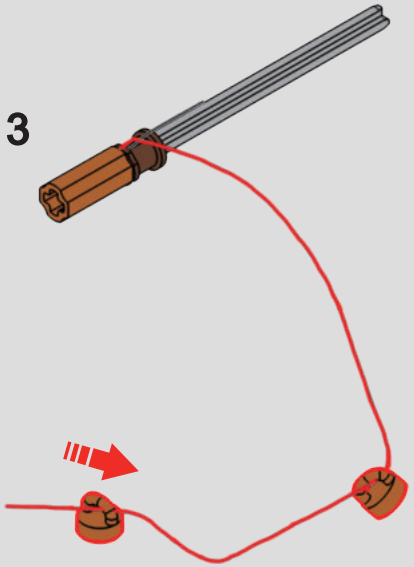

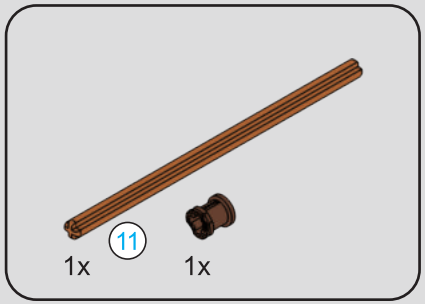



5

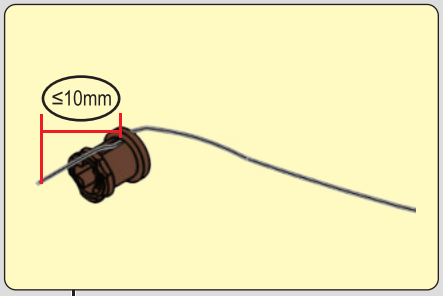

1

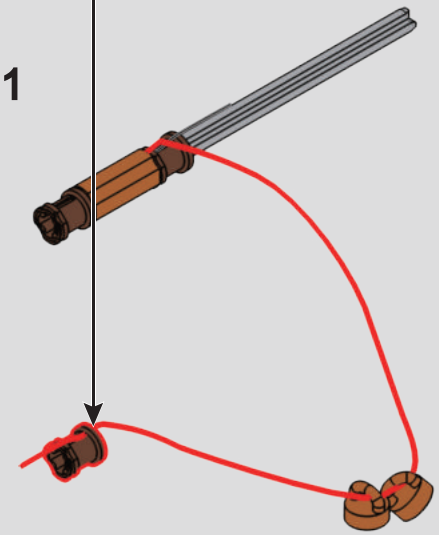

2

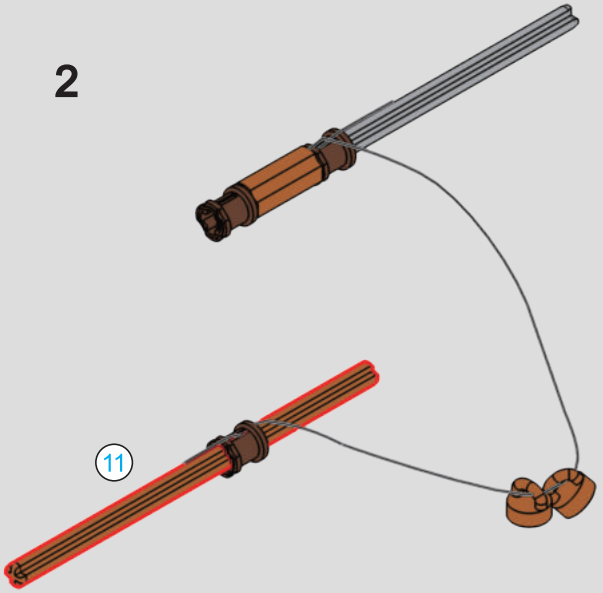

6

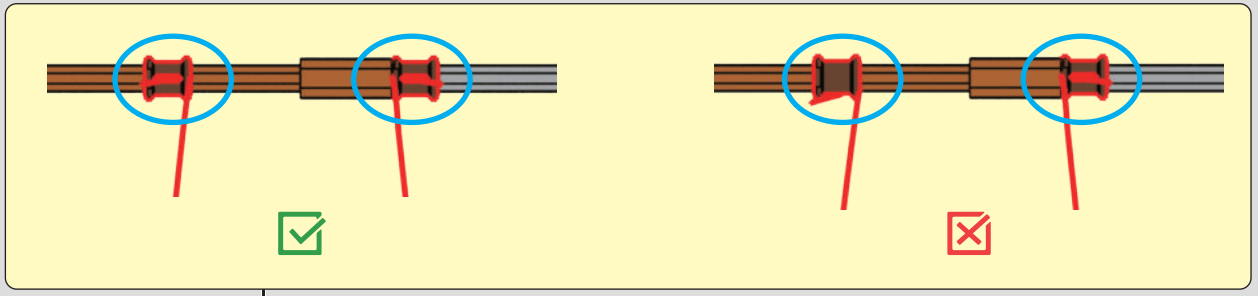

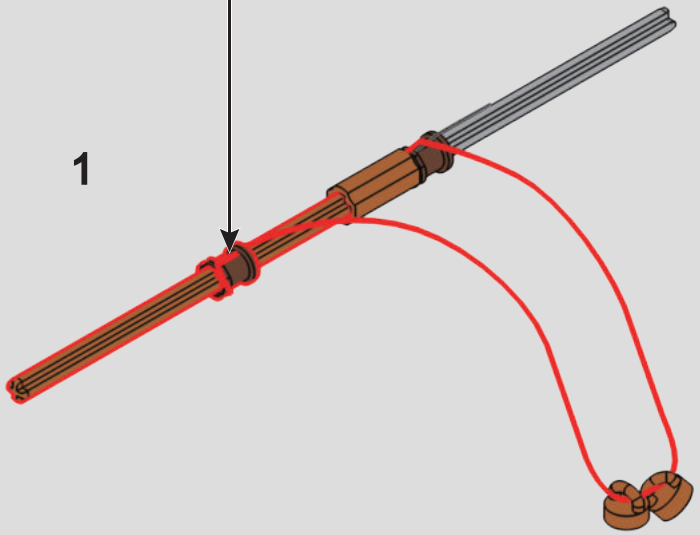

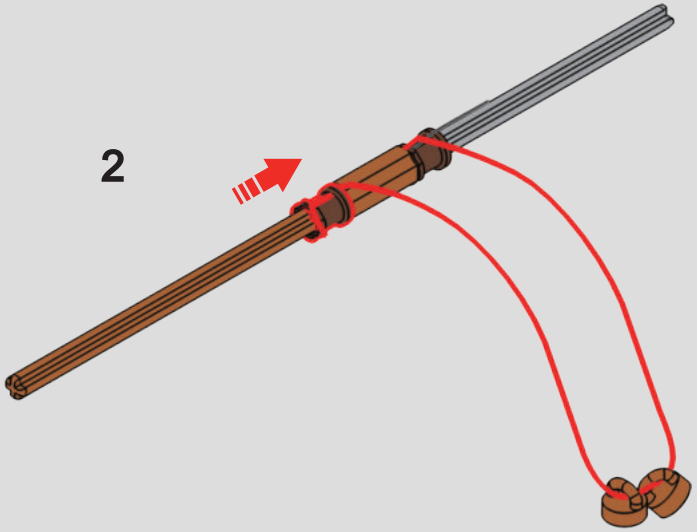

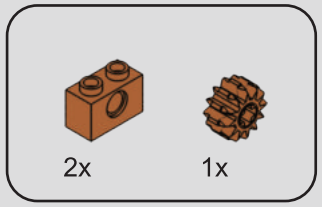

7

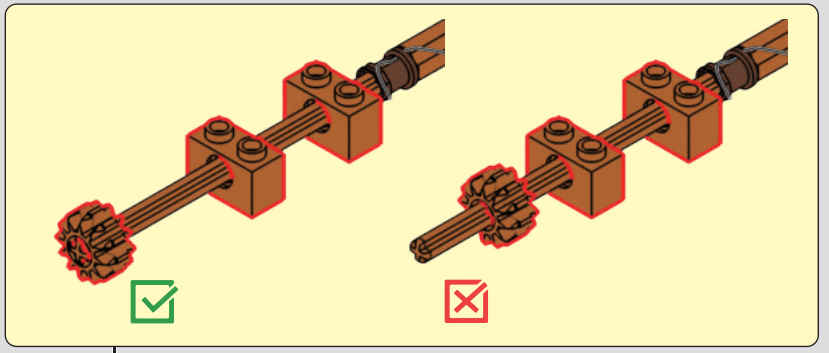

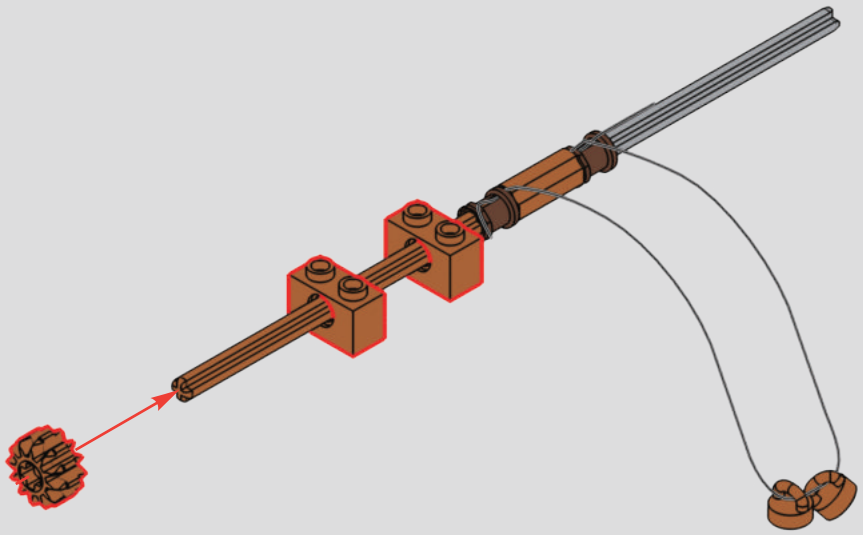

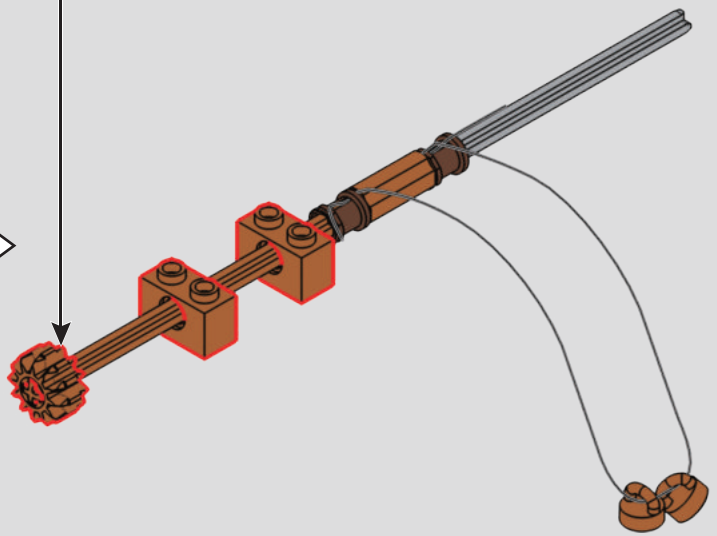

8

1

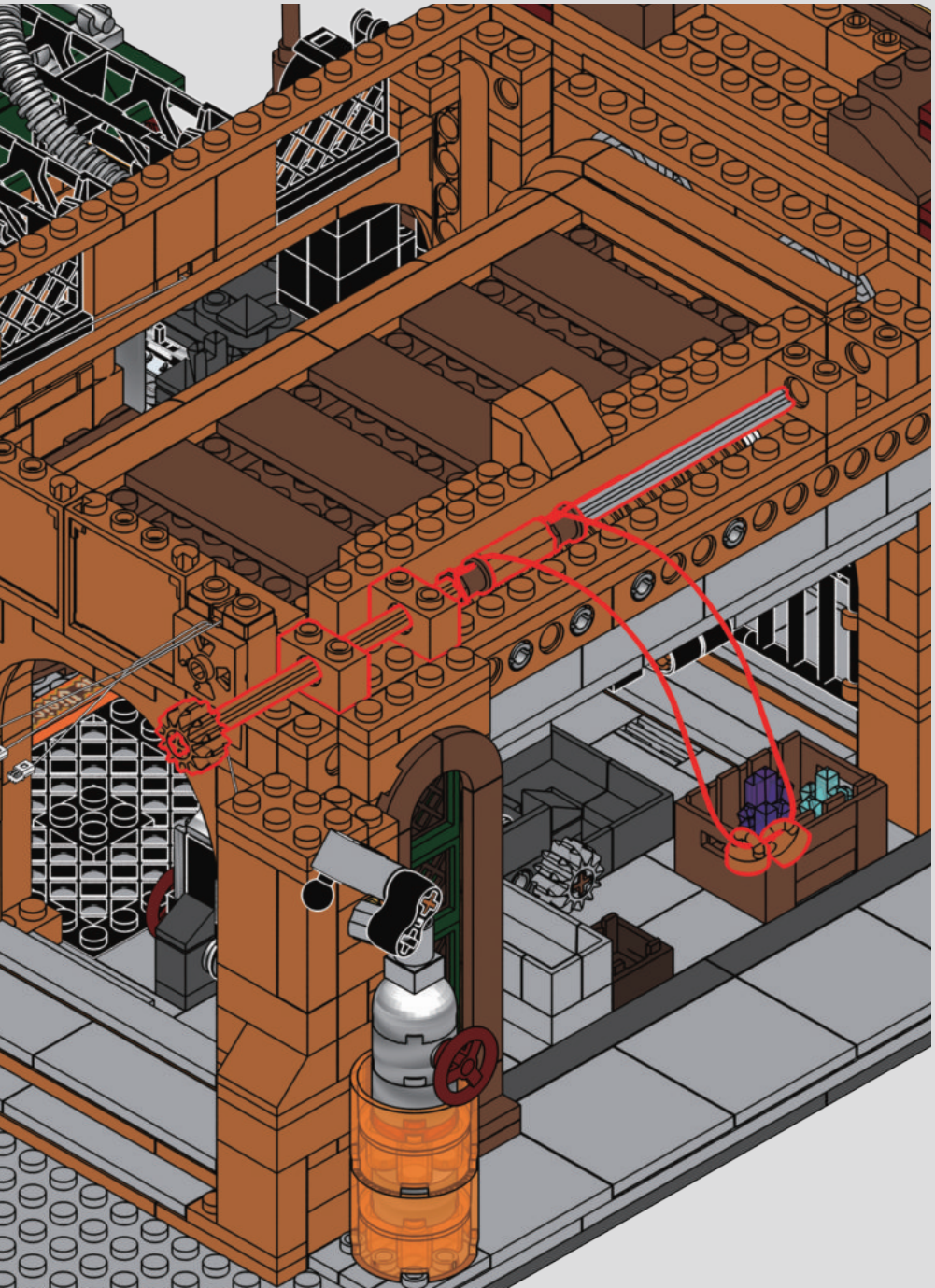

2



9

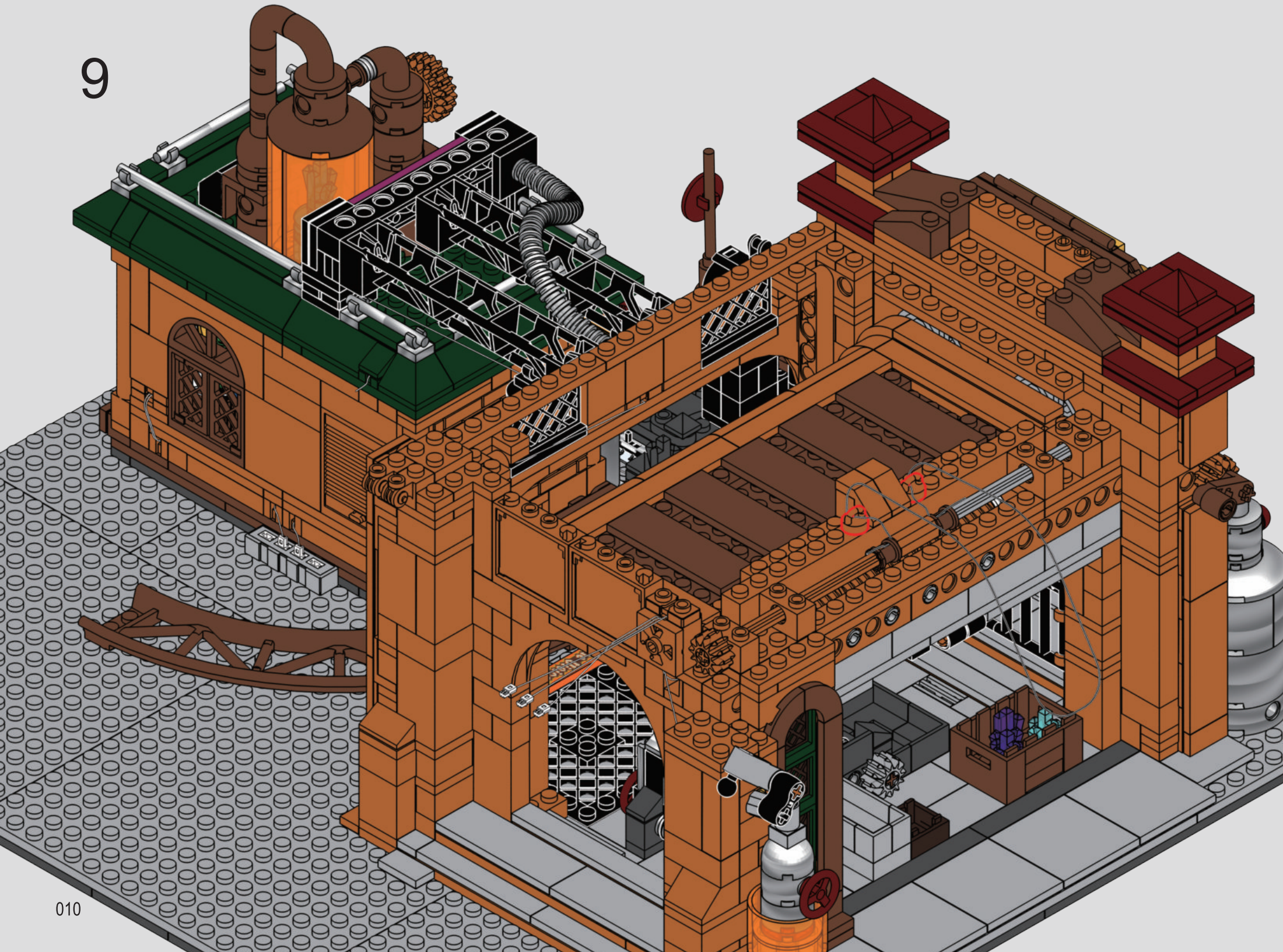

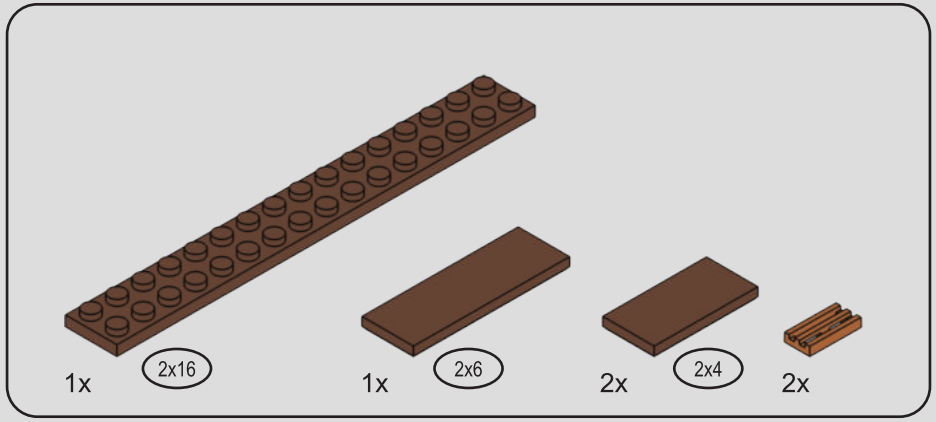

10

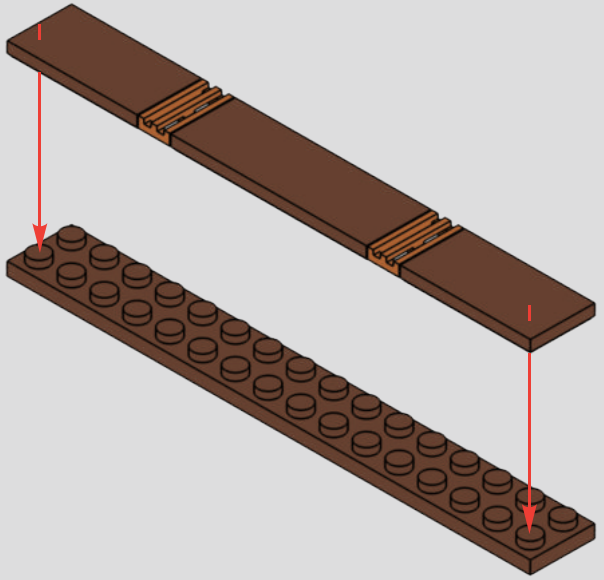

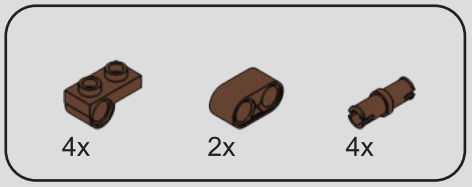

11

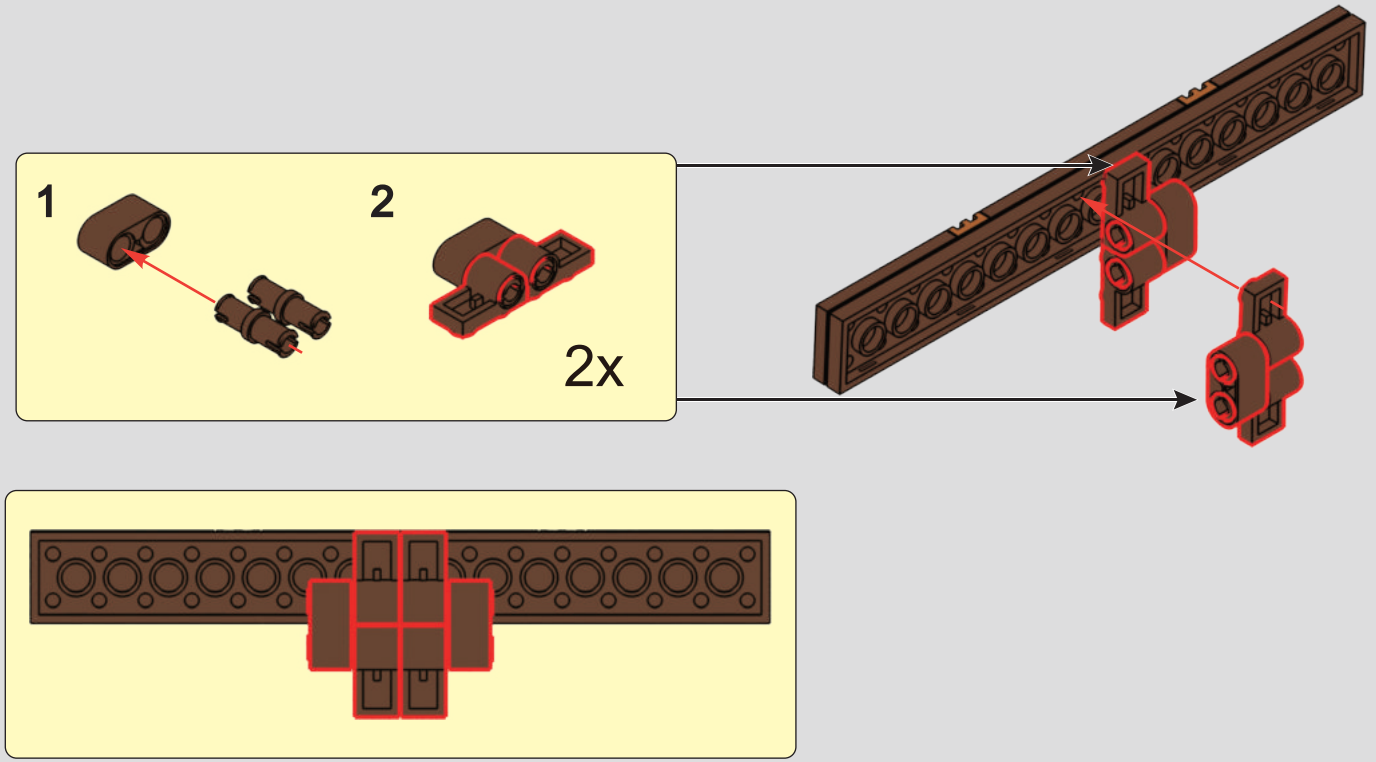

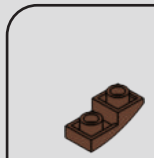

12

1

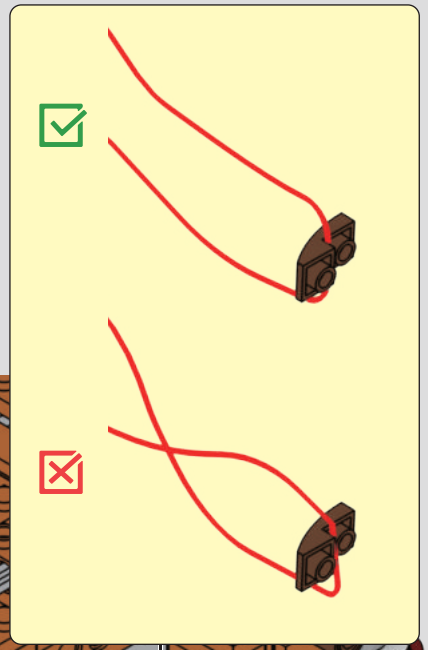

2

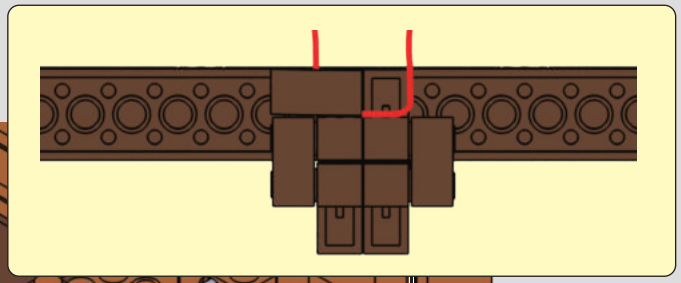

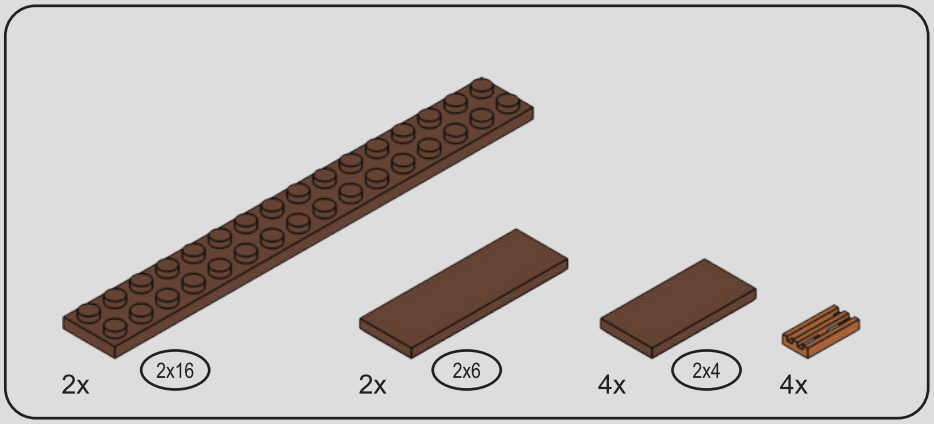

13

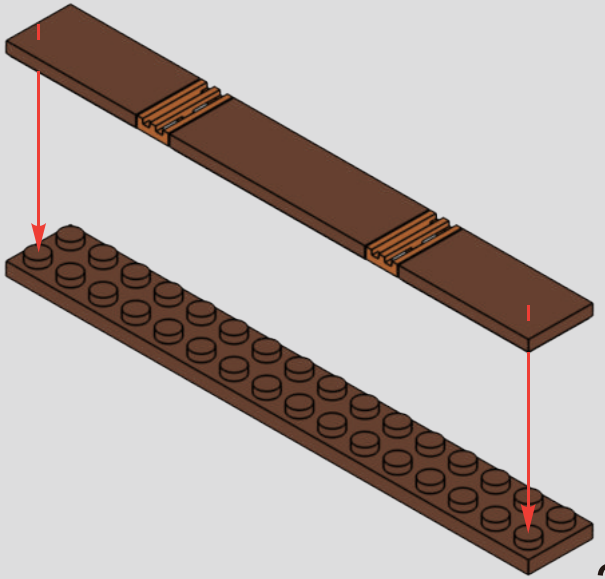

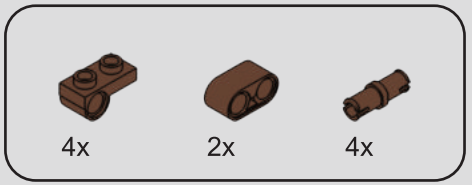

14

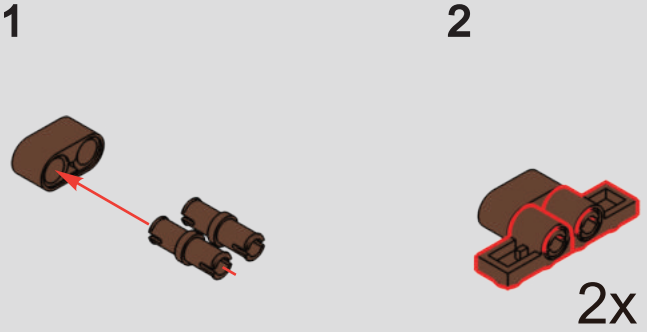

15

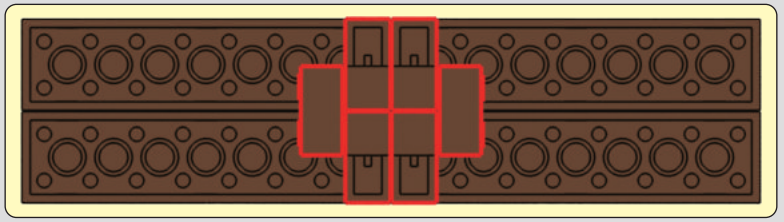

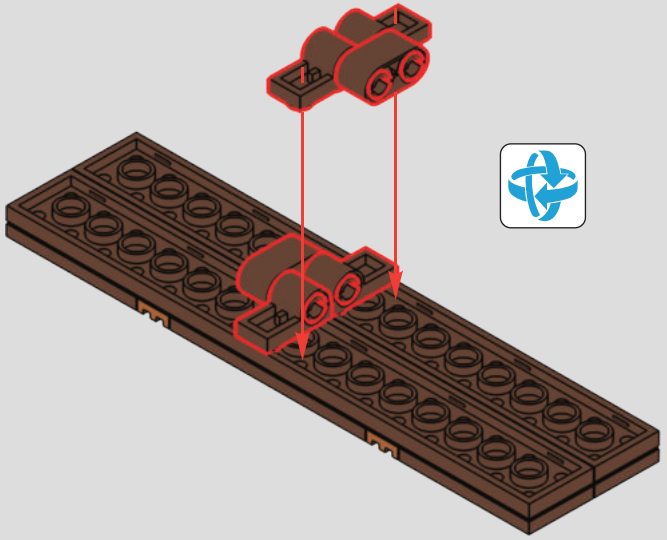

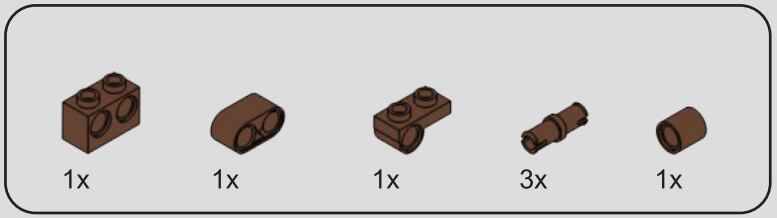

16

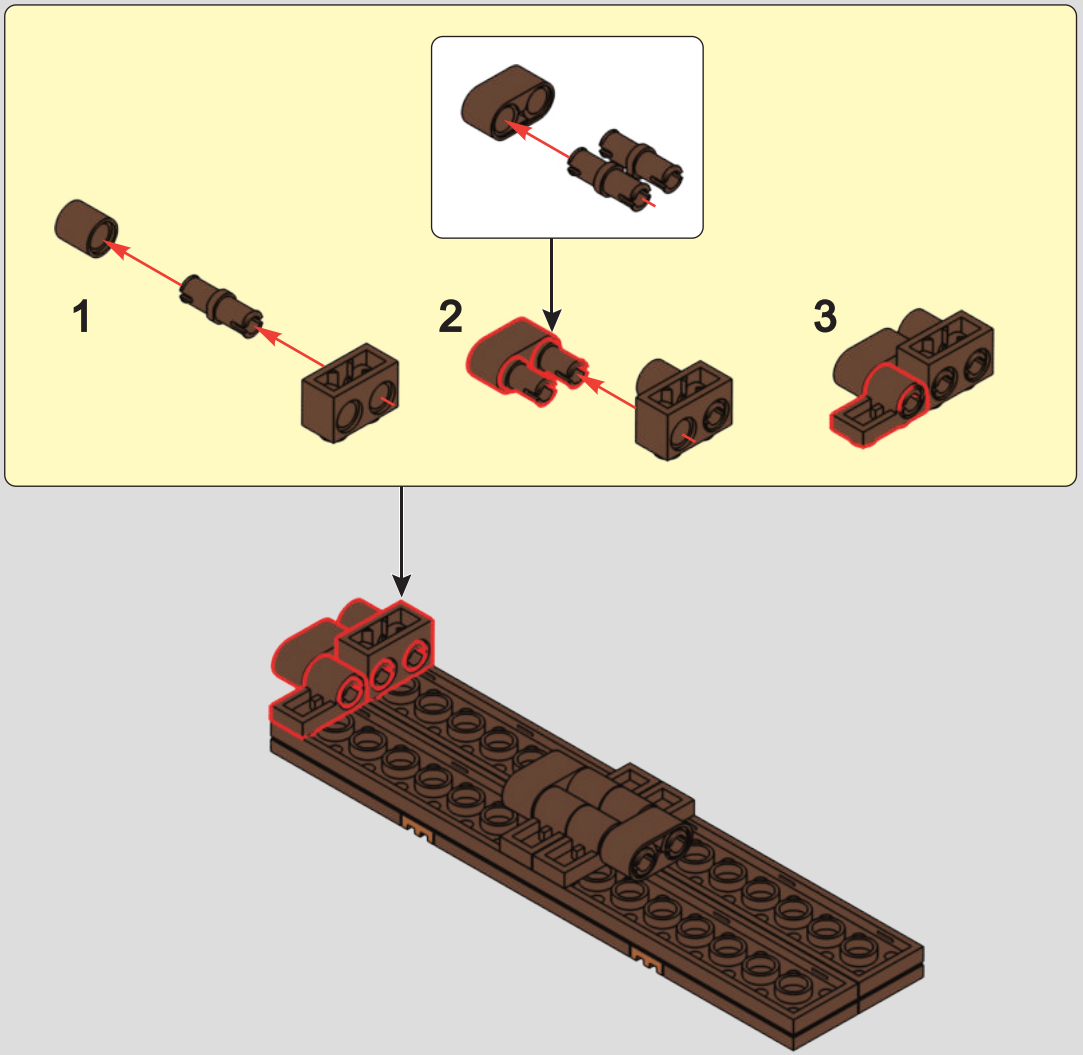

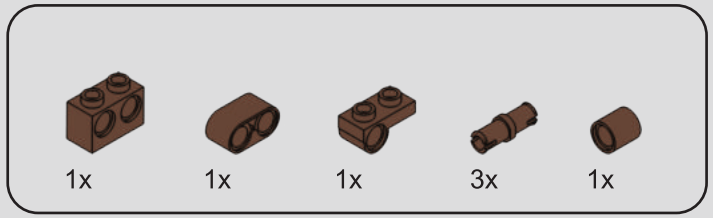

17

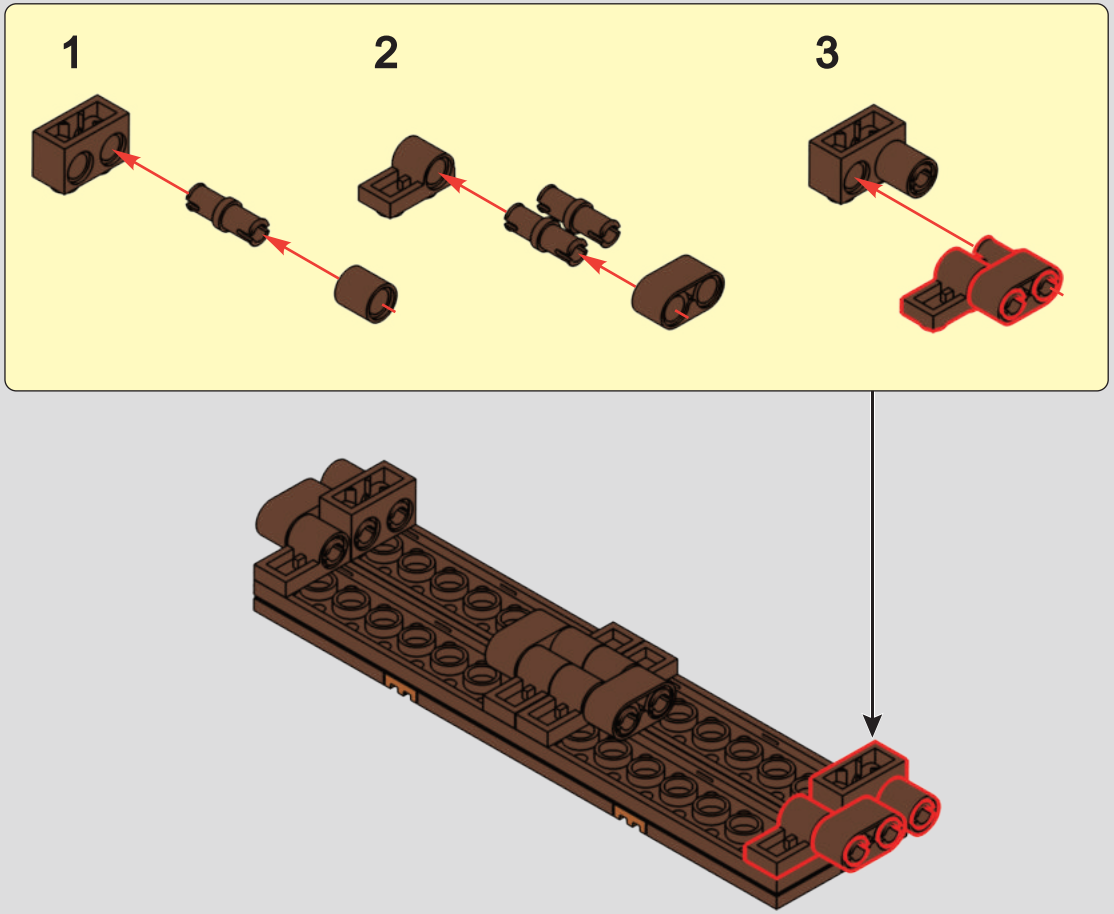

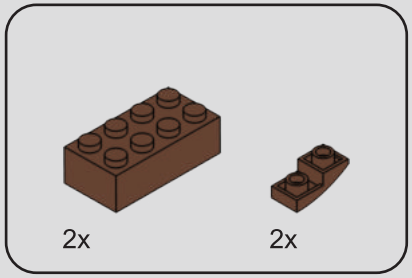

18

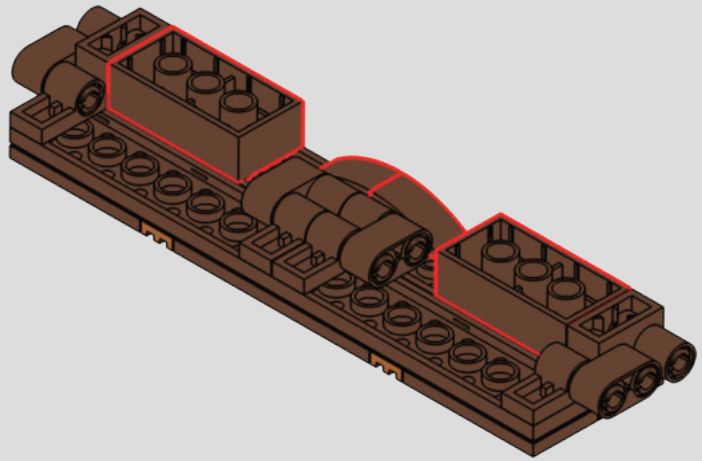

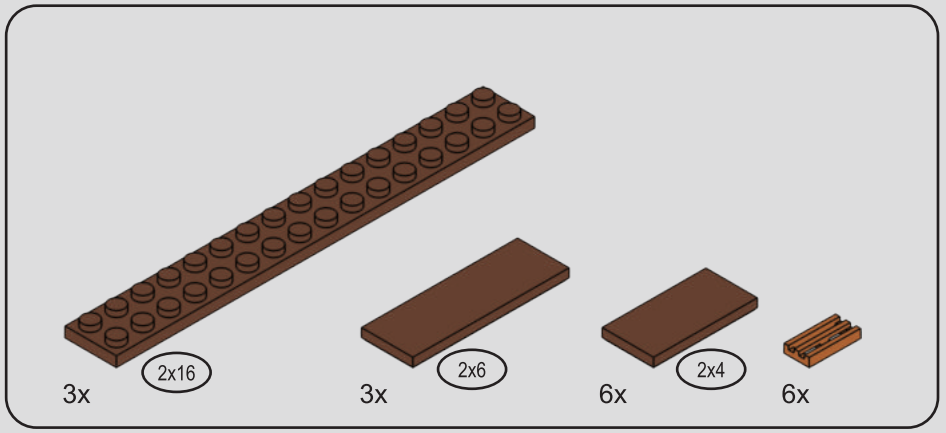

19

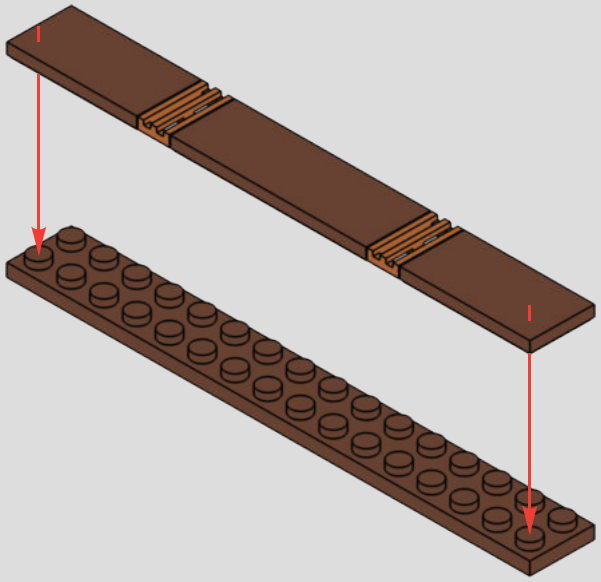

3x

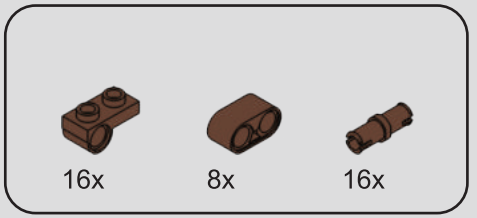

20

1

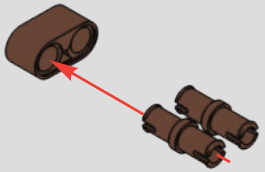

2

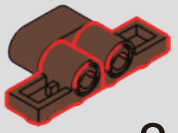

8x

21

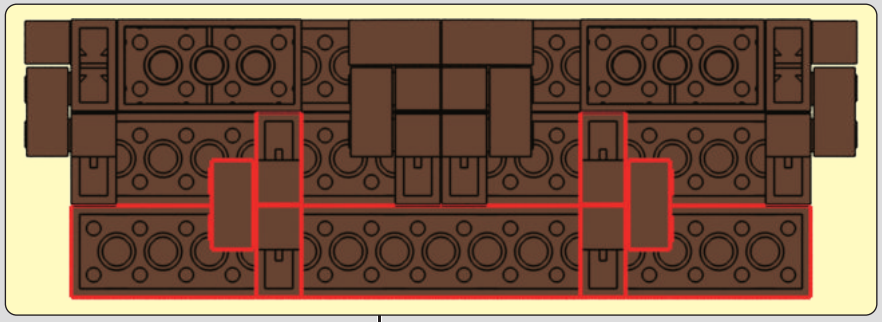

1

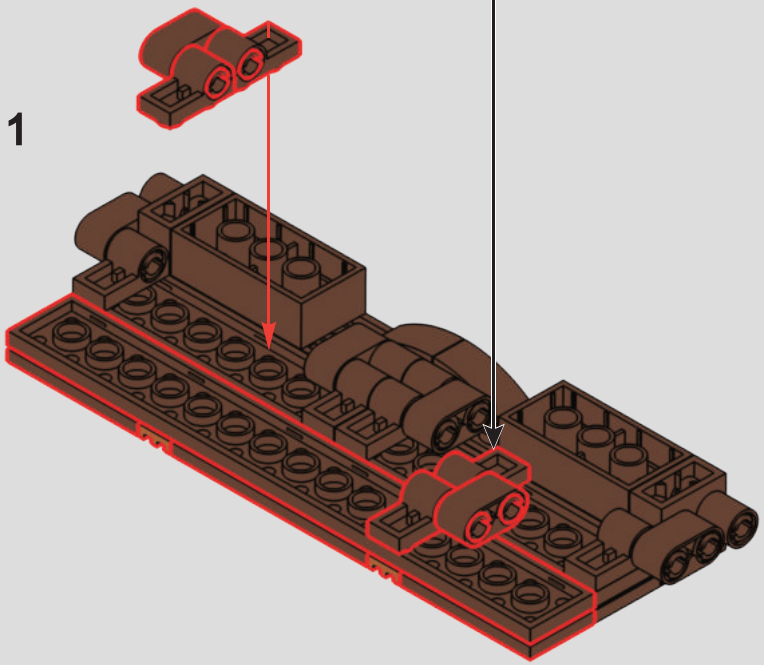

2

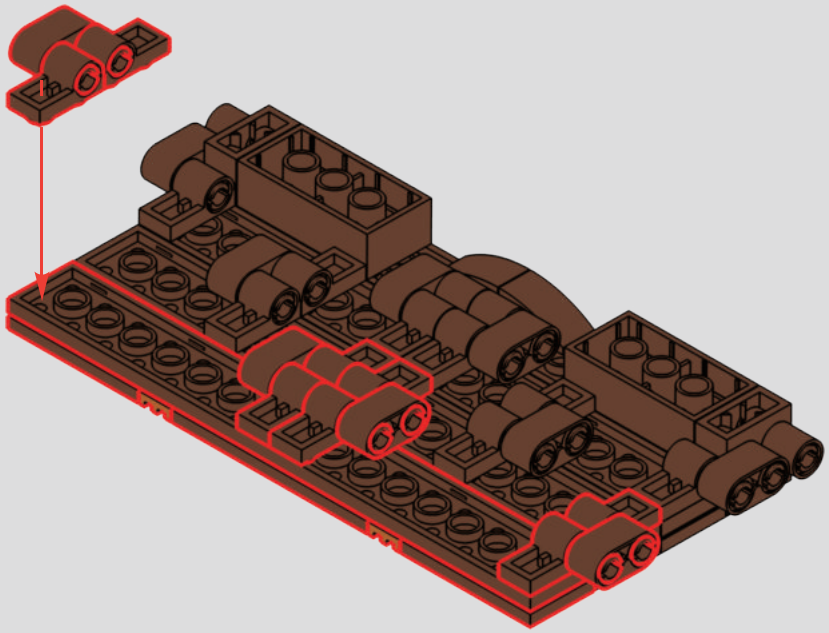

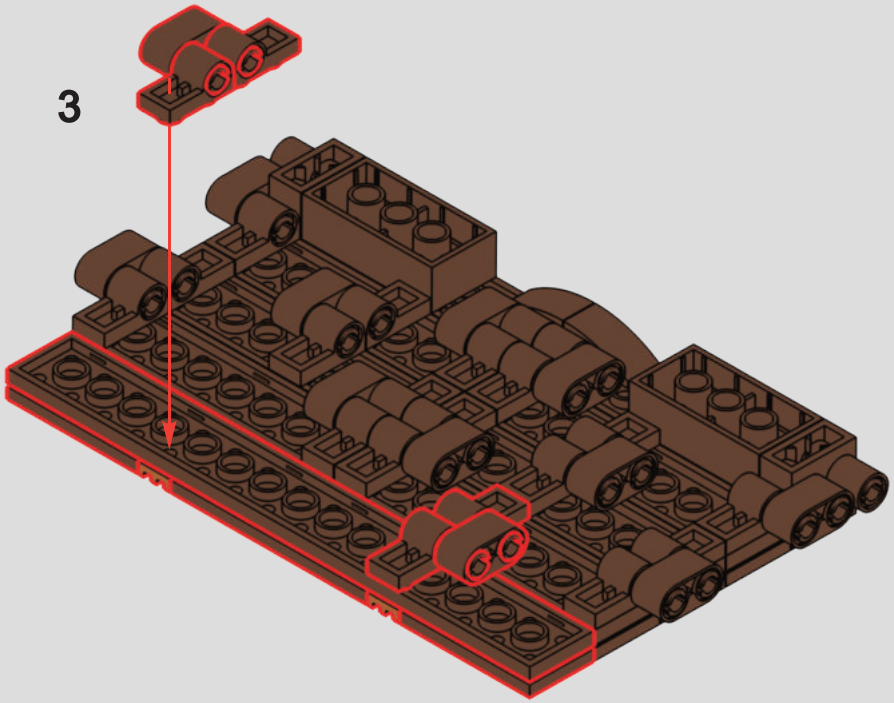

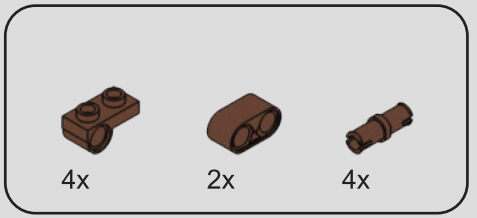

22

1

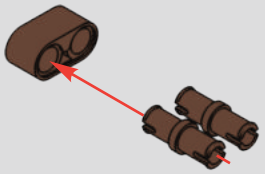

2

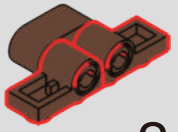

2x

23

1

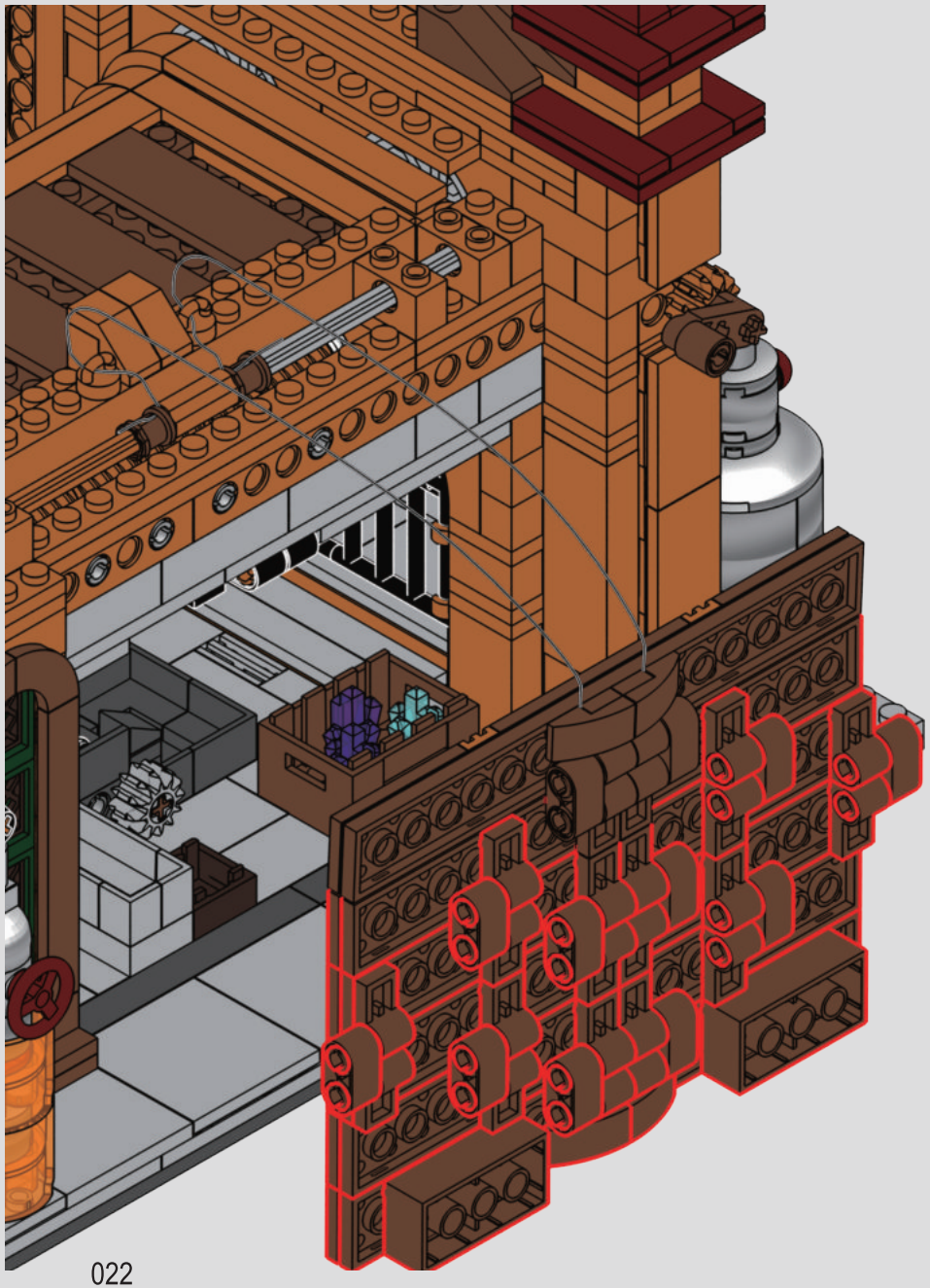

2

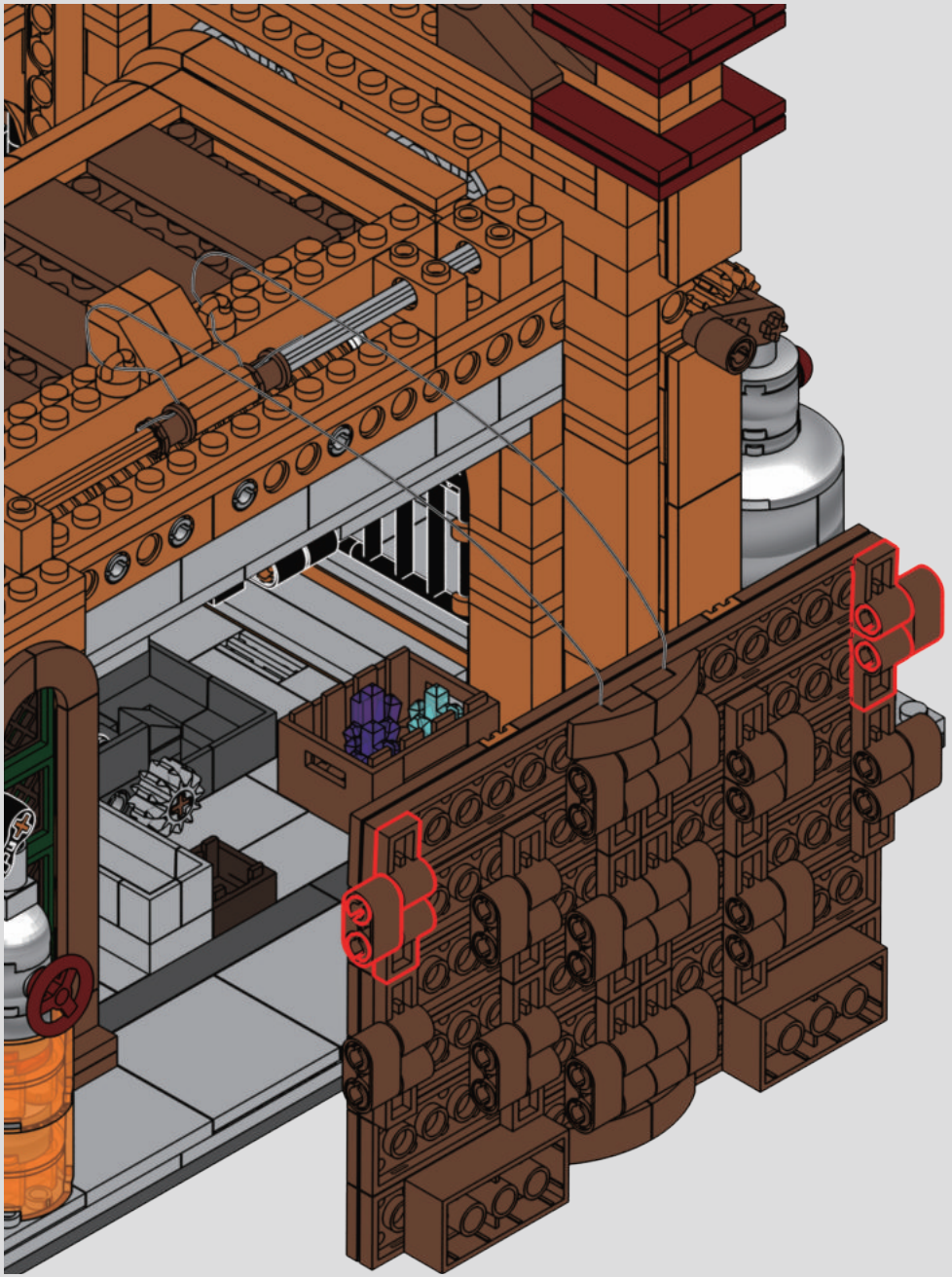

24

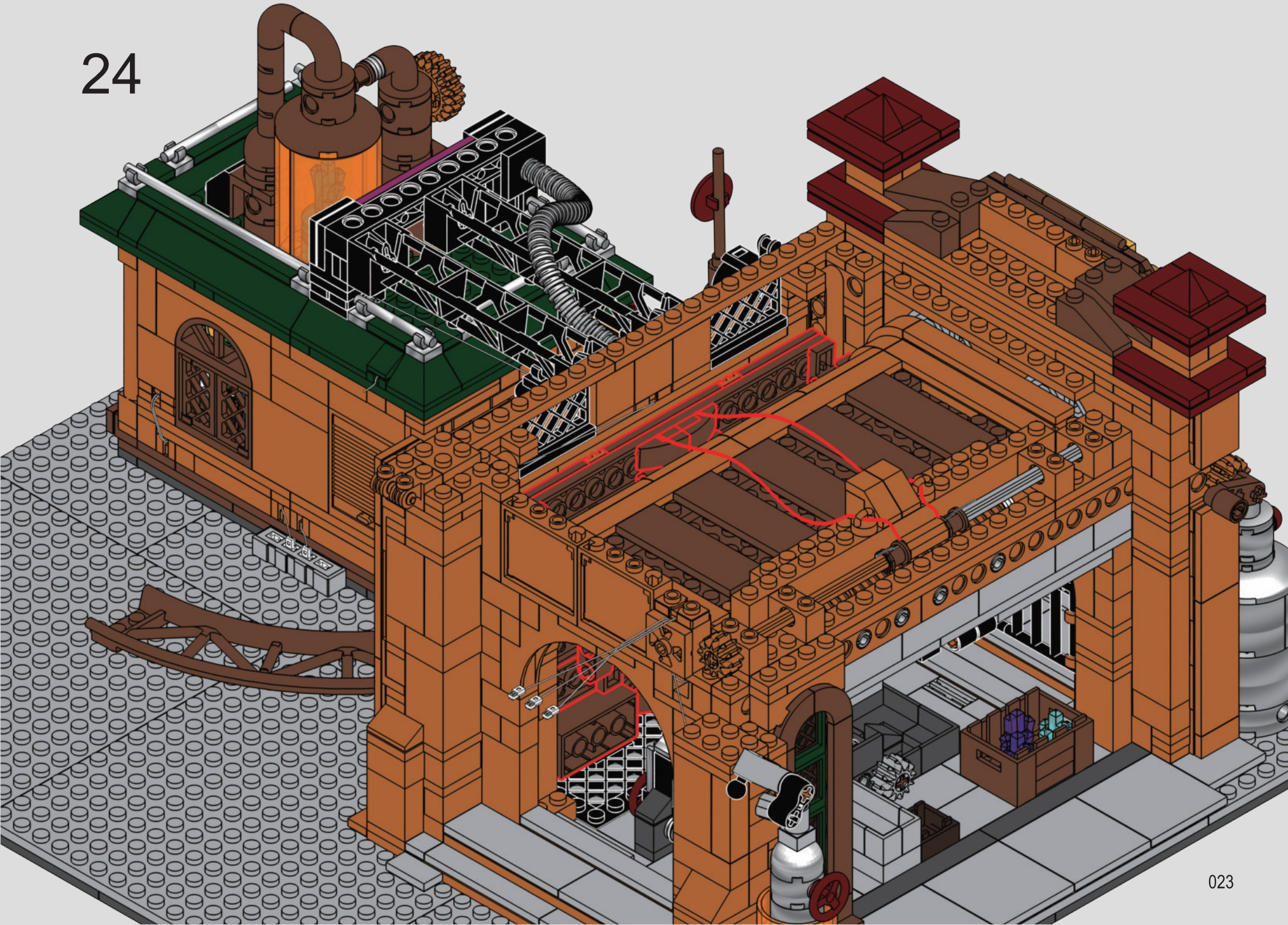

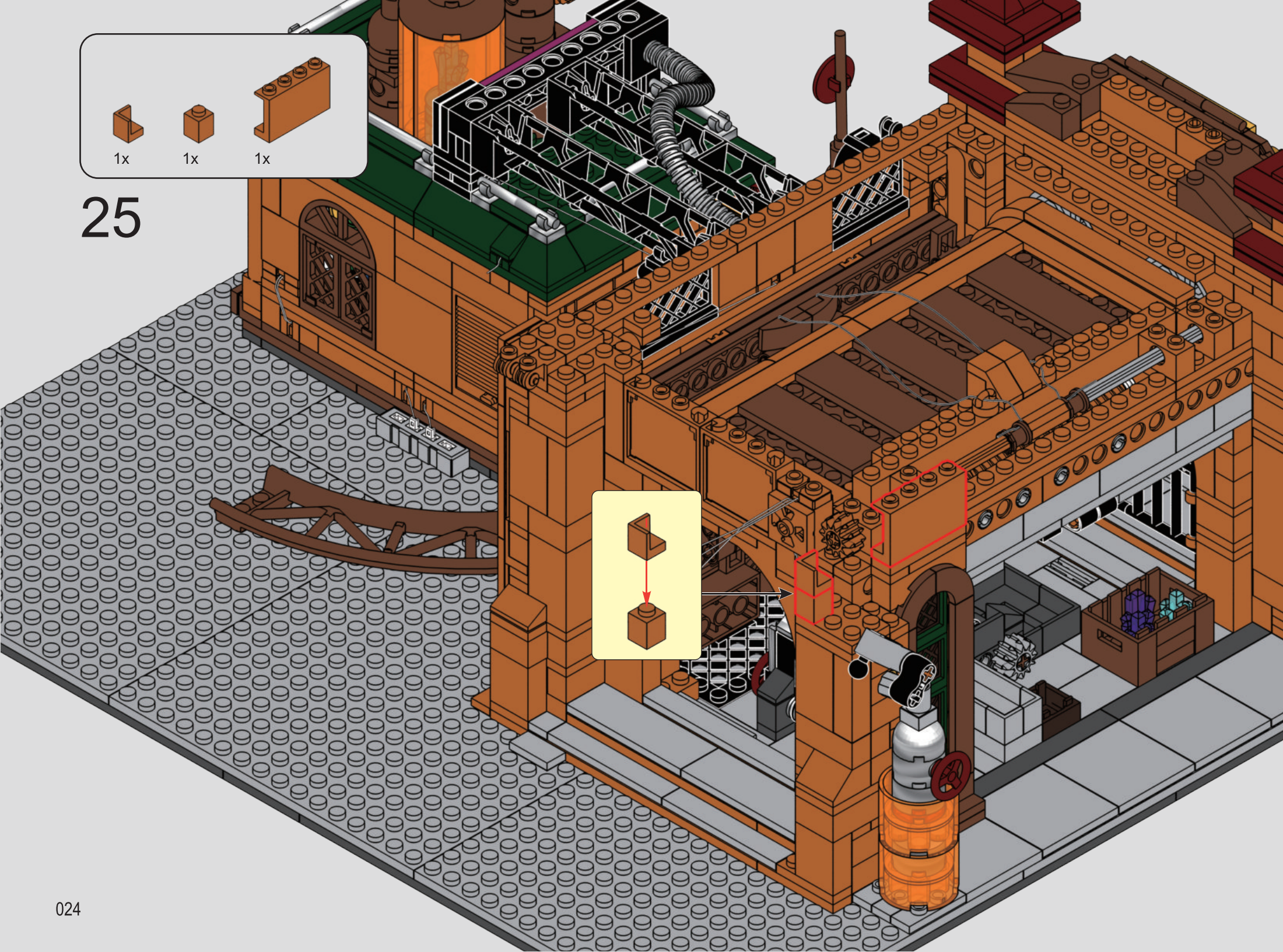
1x
1x
1x
25
024

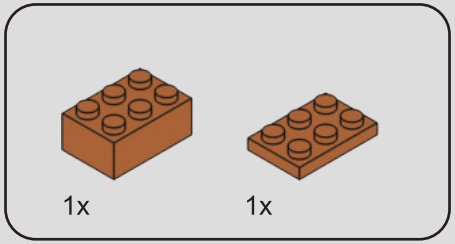

26

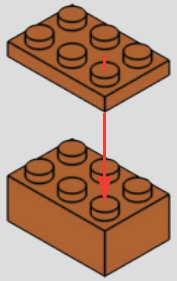

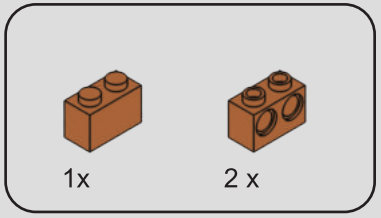

27

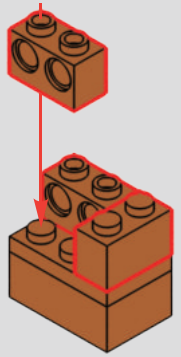

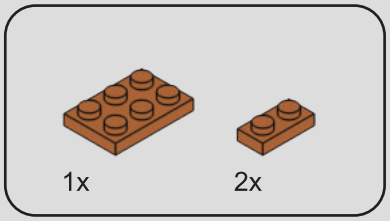

28

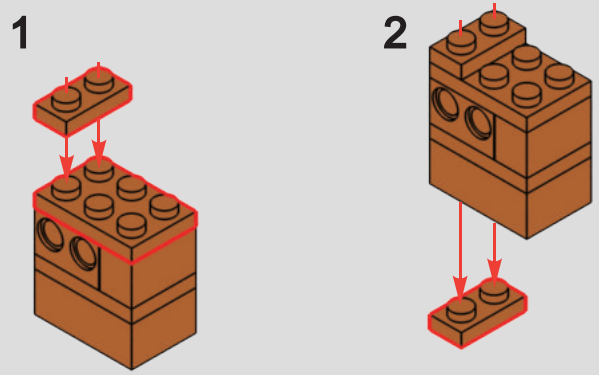

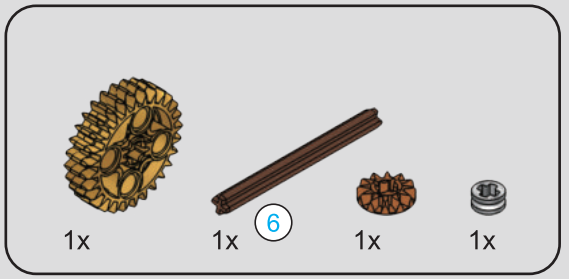

29

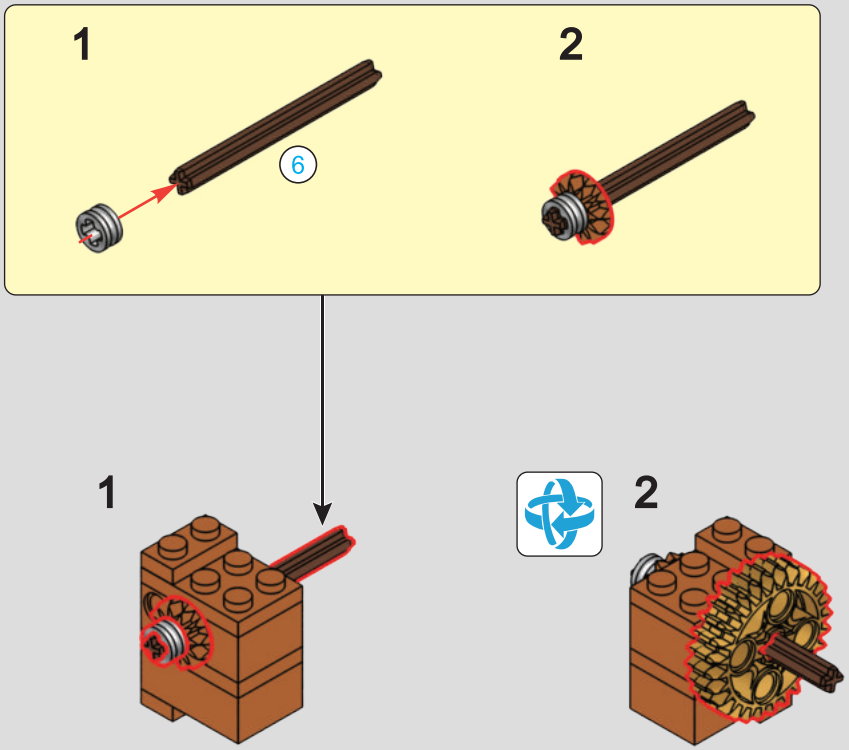



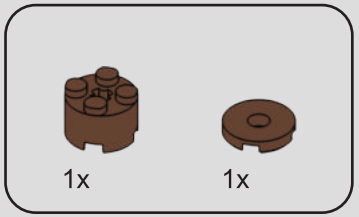

30

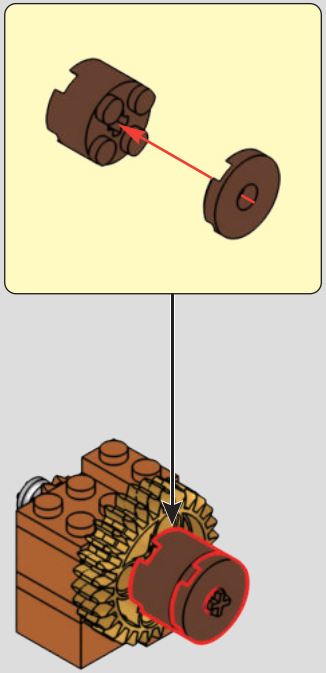

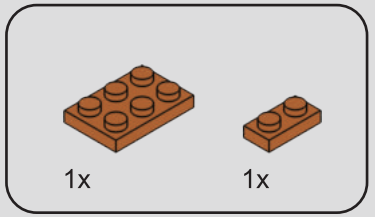

31

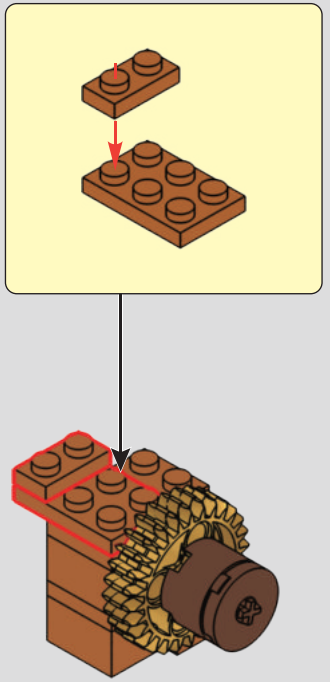

32

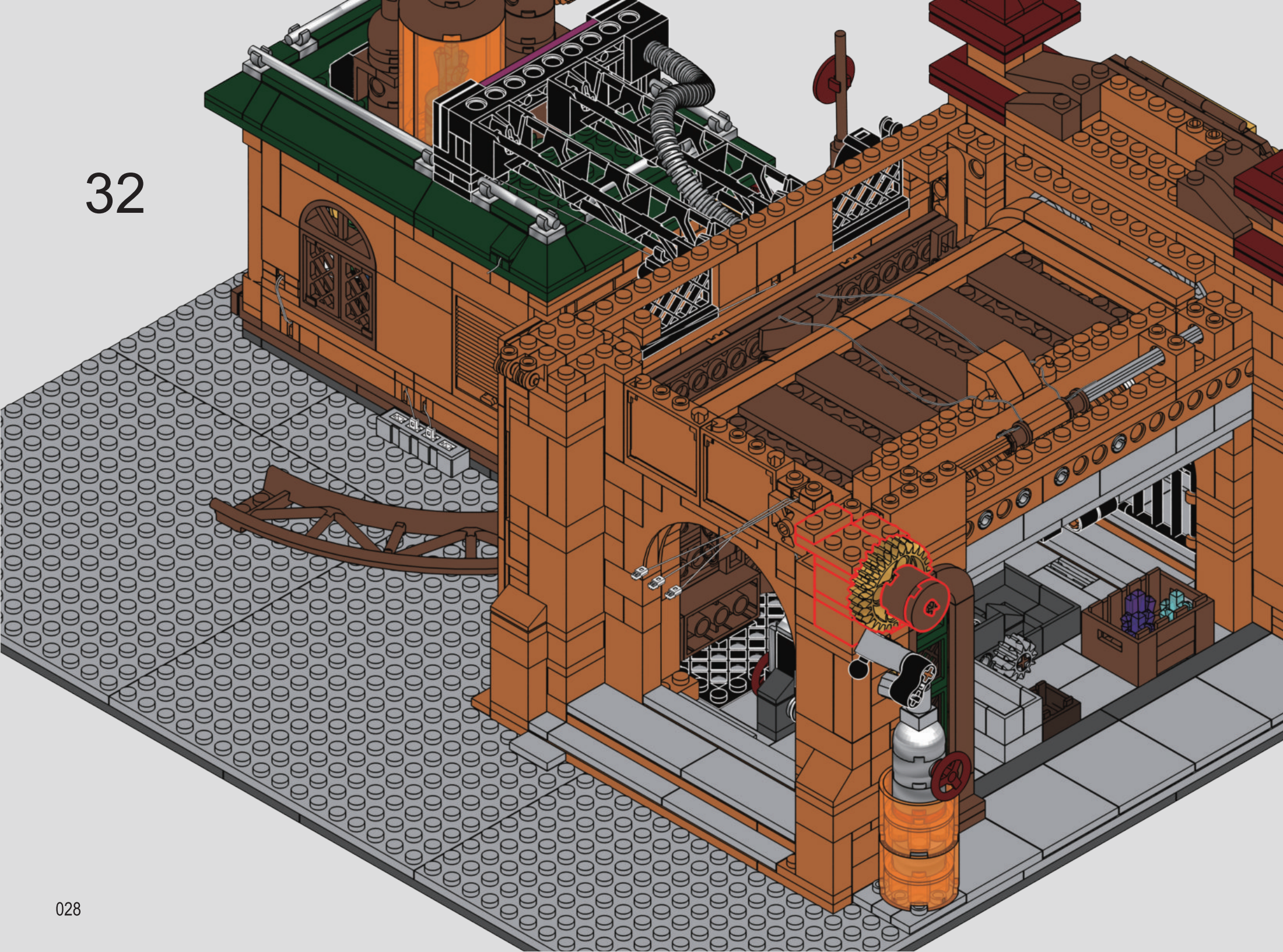

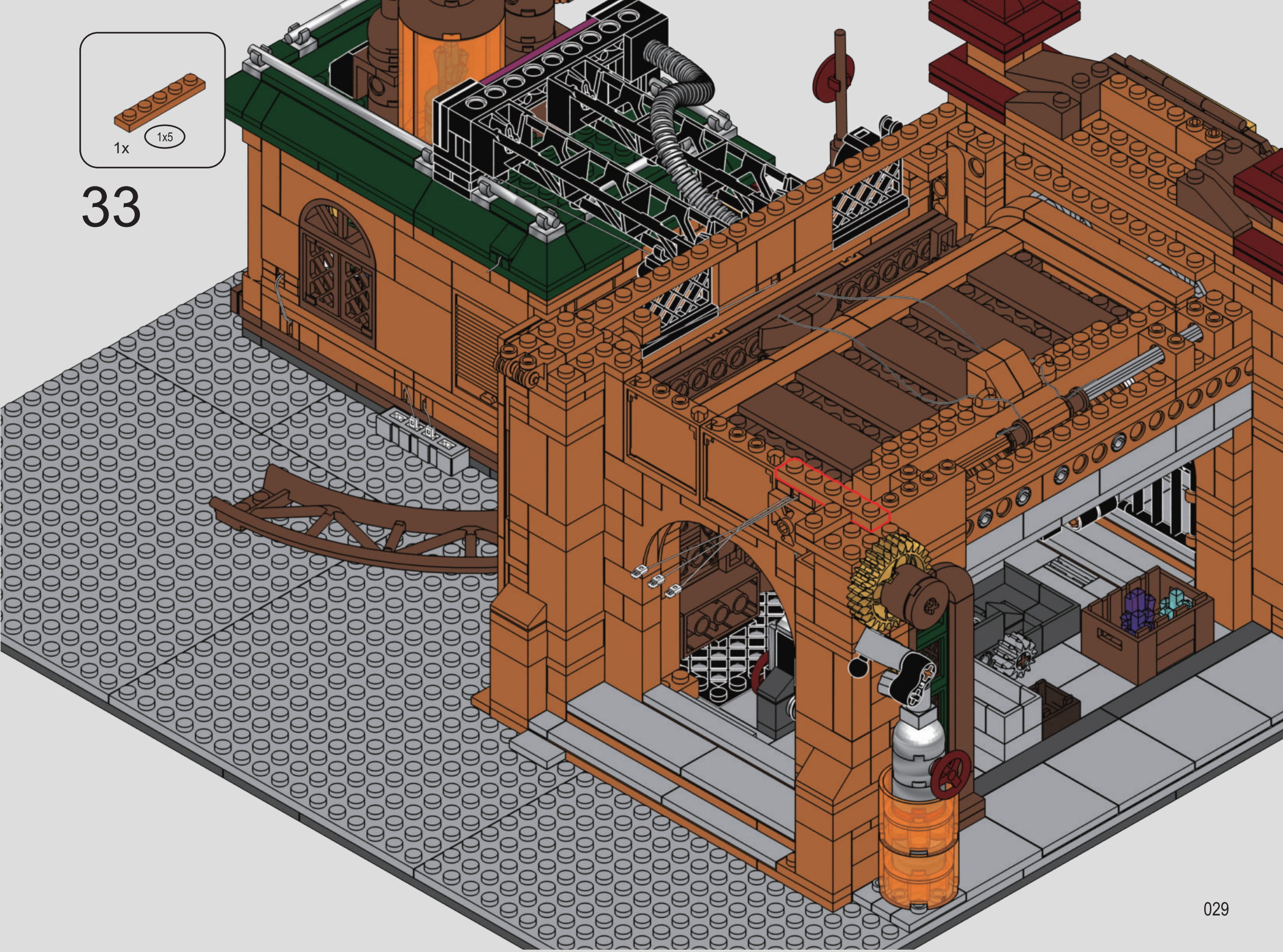

33

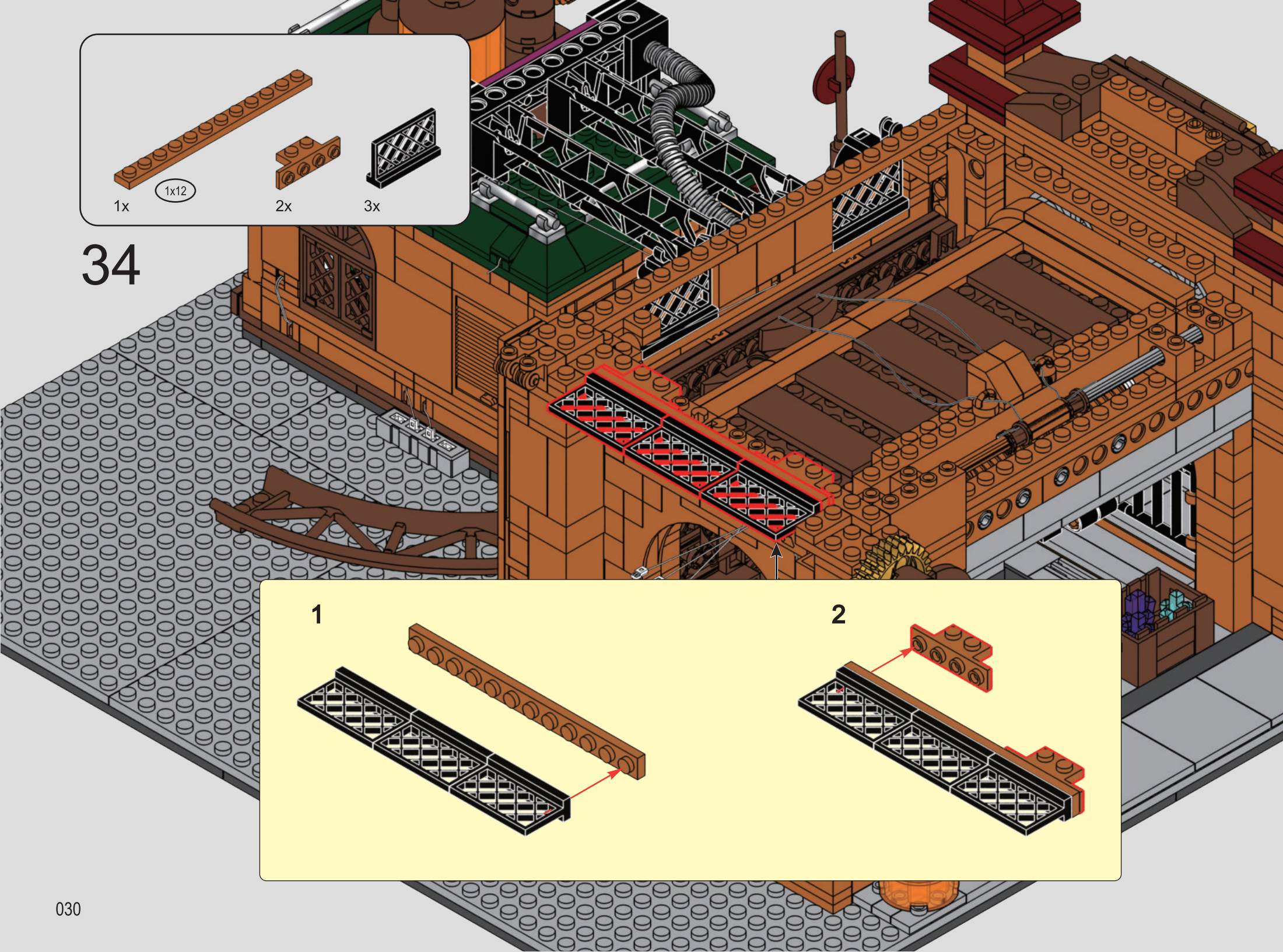
1x
1x12
2x
3x
34
1
2

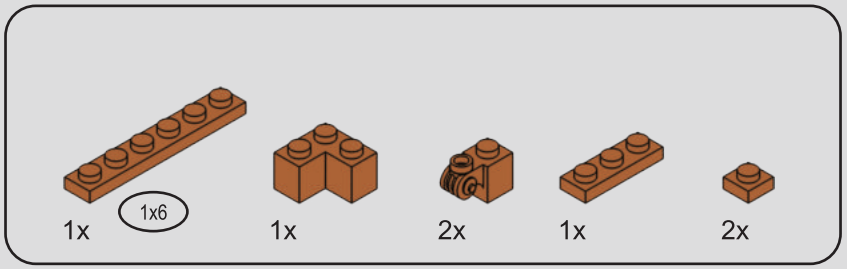

35

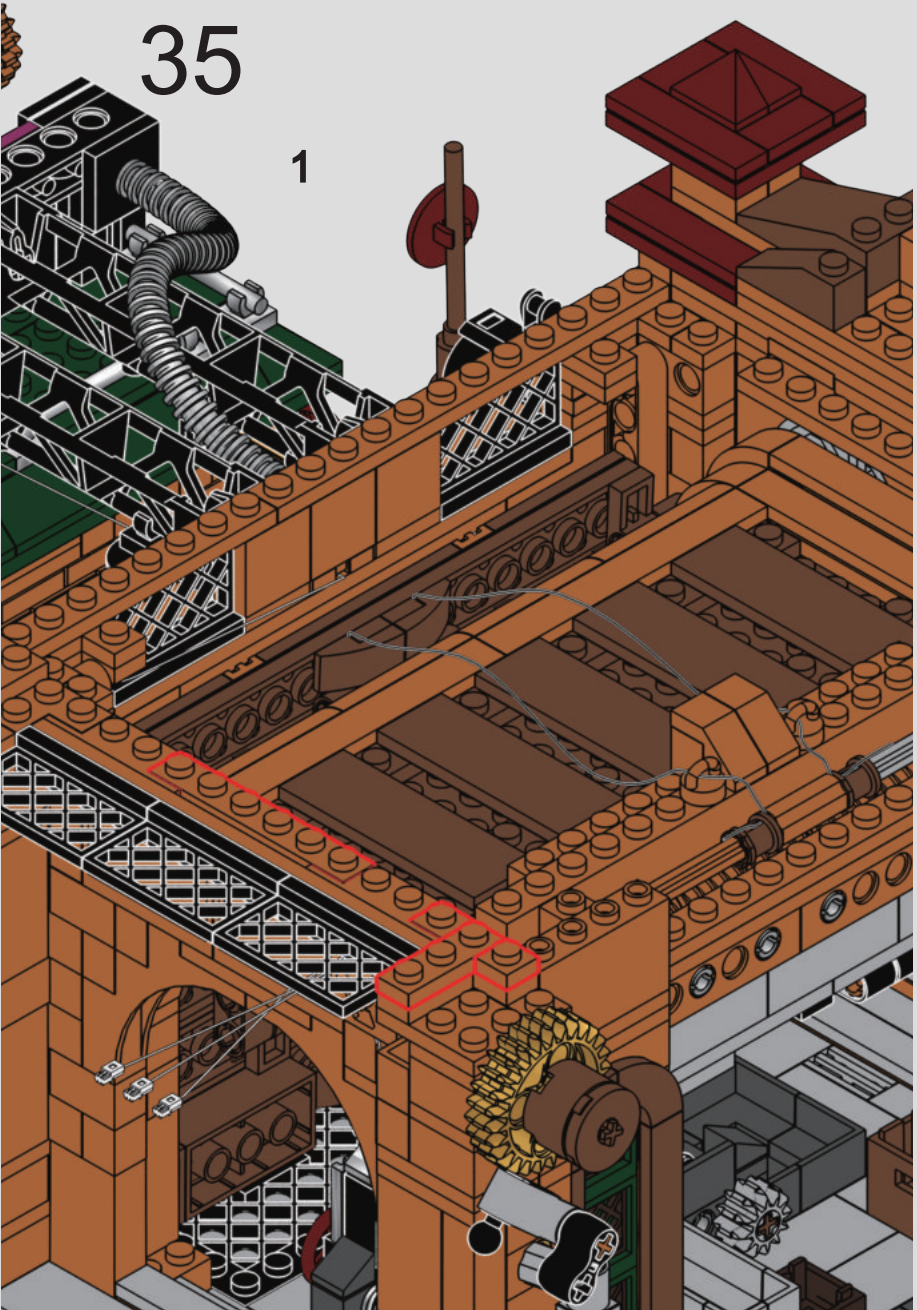

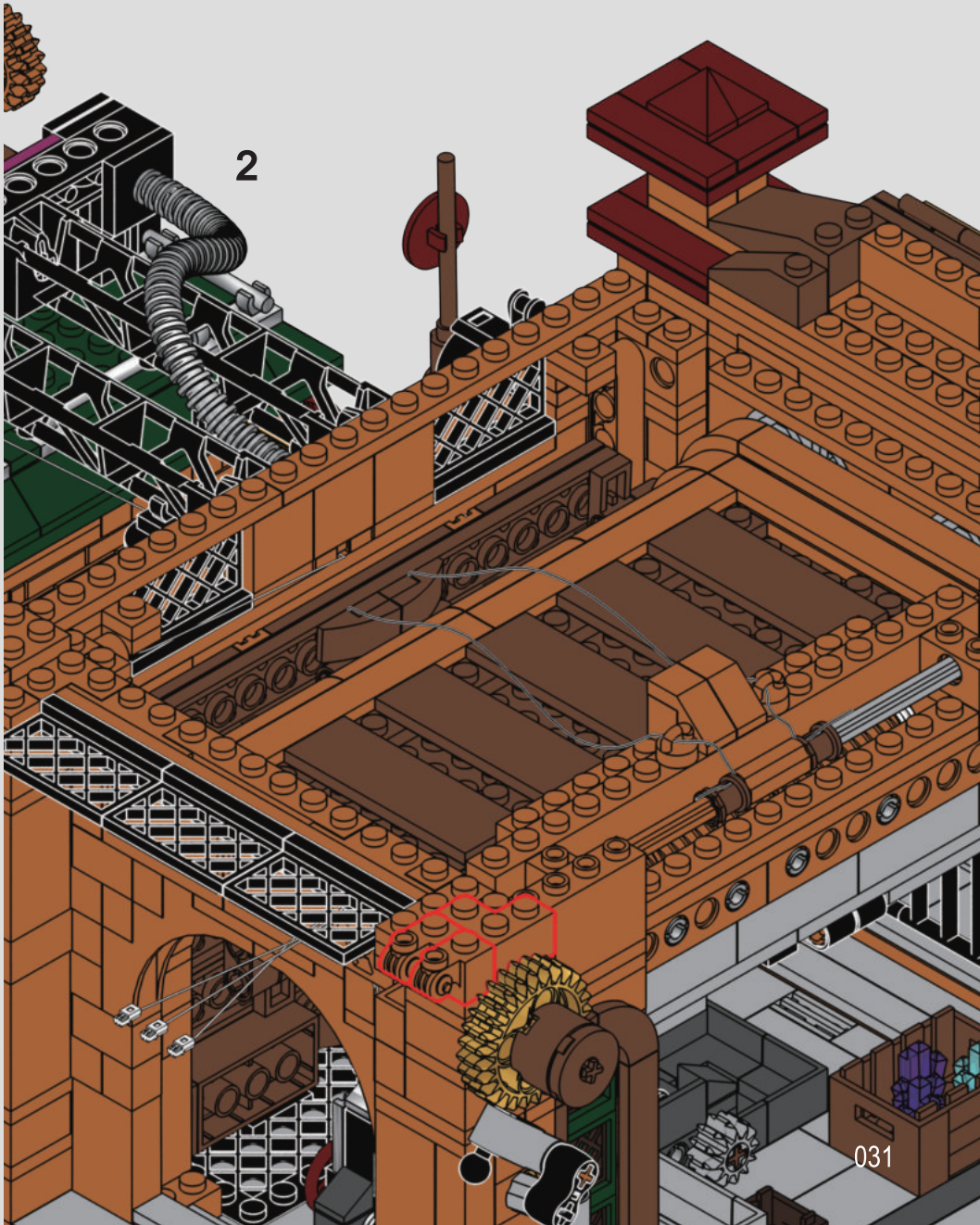

Please turn part 1 to check whether part 2 is operating normally.

请转动零件1以检查零件2是否正常运行。

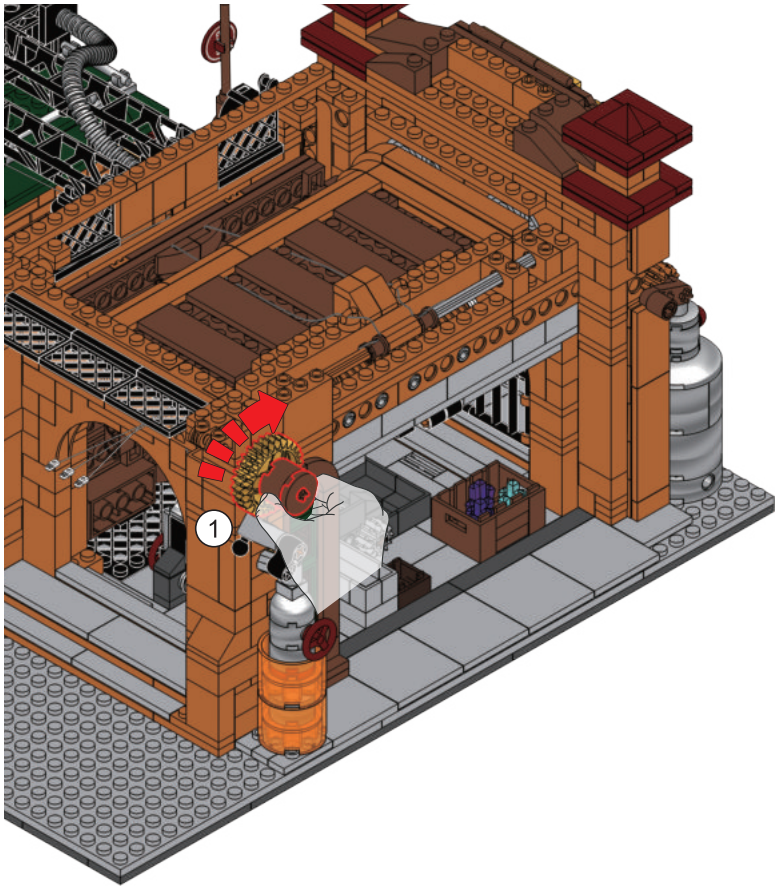

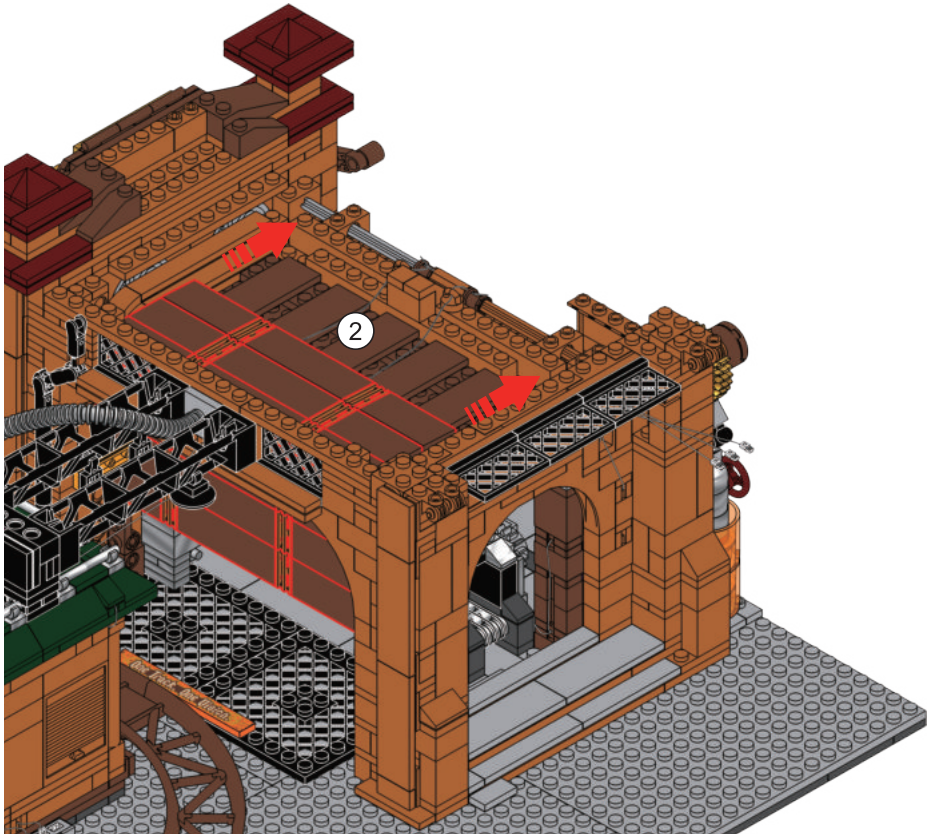

Please turn part 1 to check whether part 2 is operating normally.

请转动零件1以检查零件2是否正常运行。

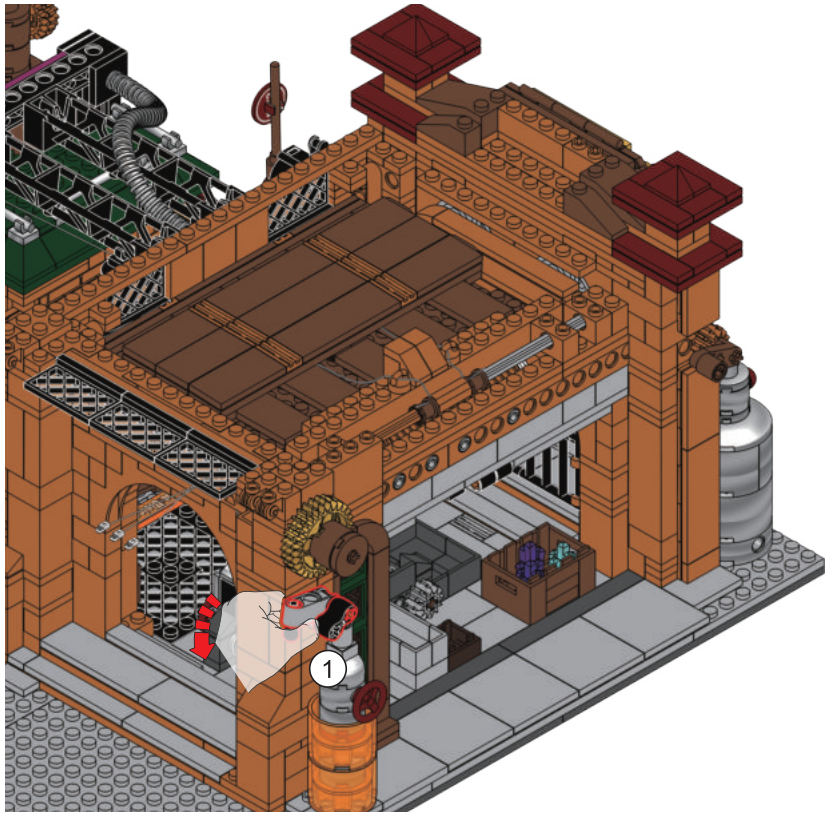

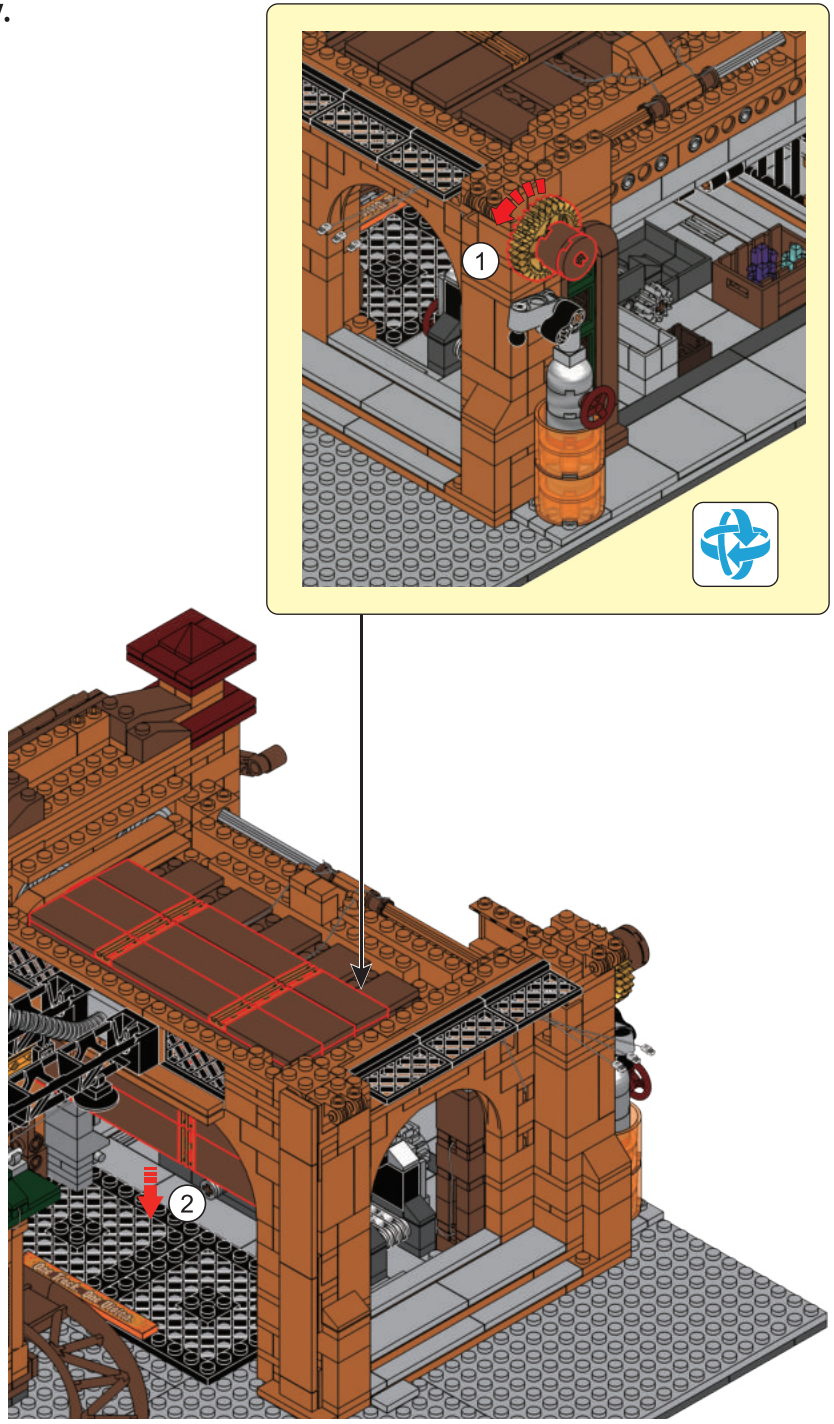

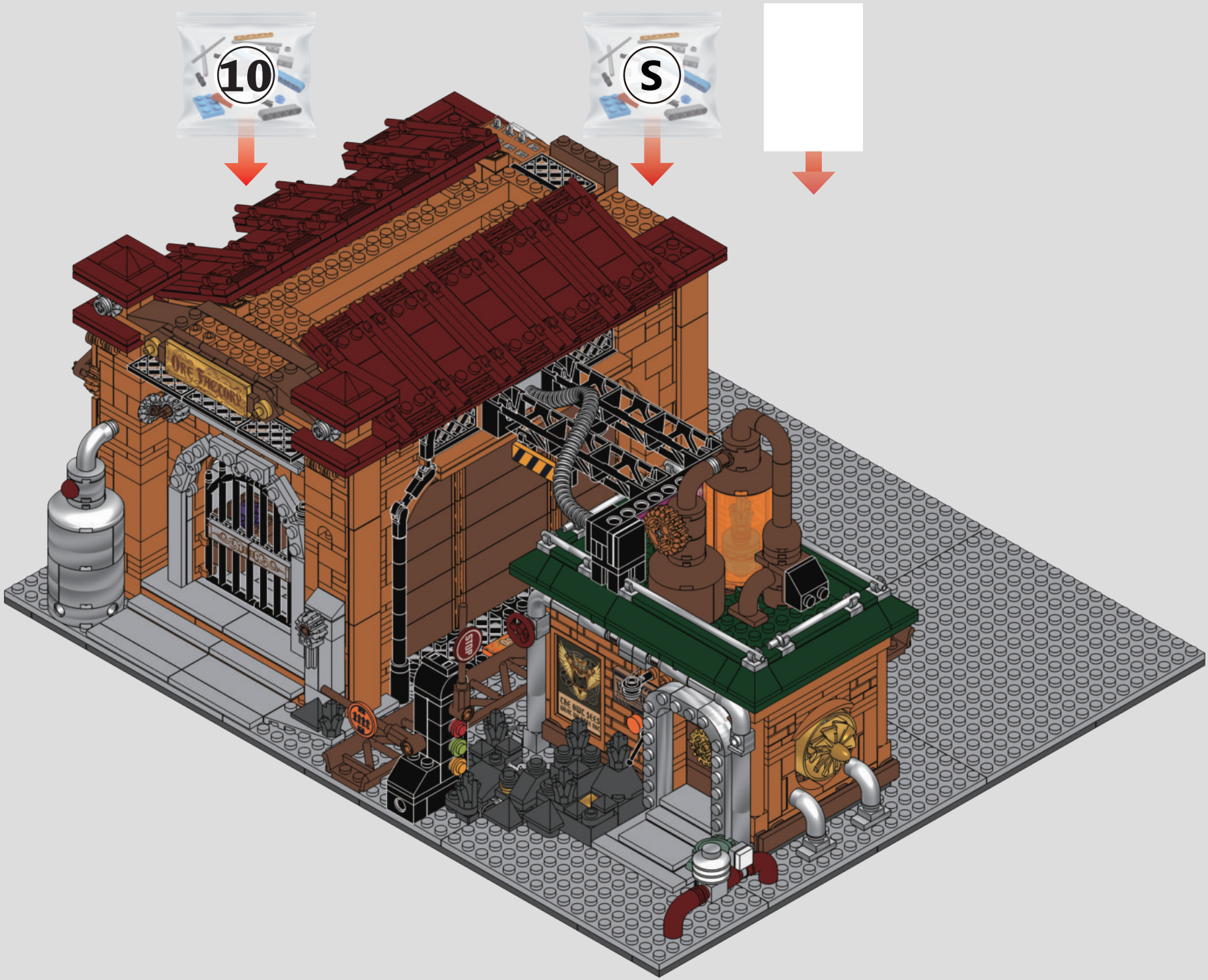
10
S

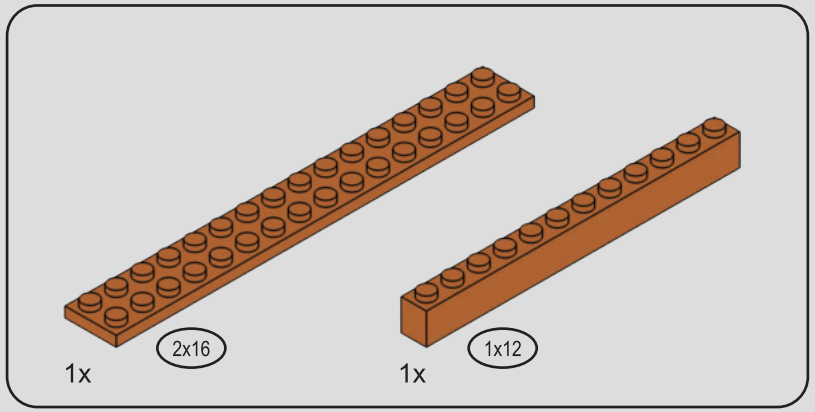

36

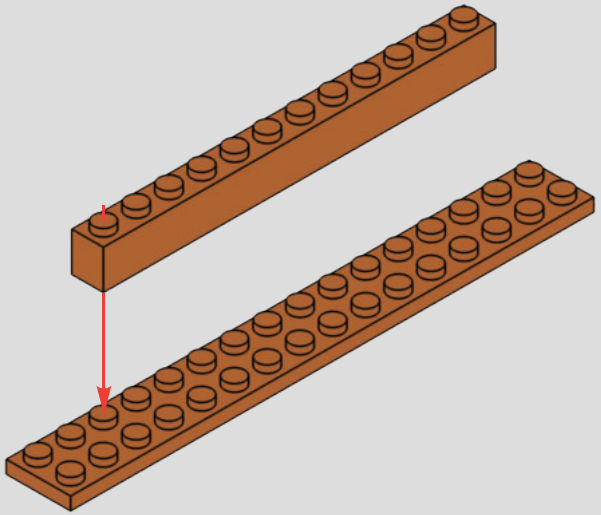

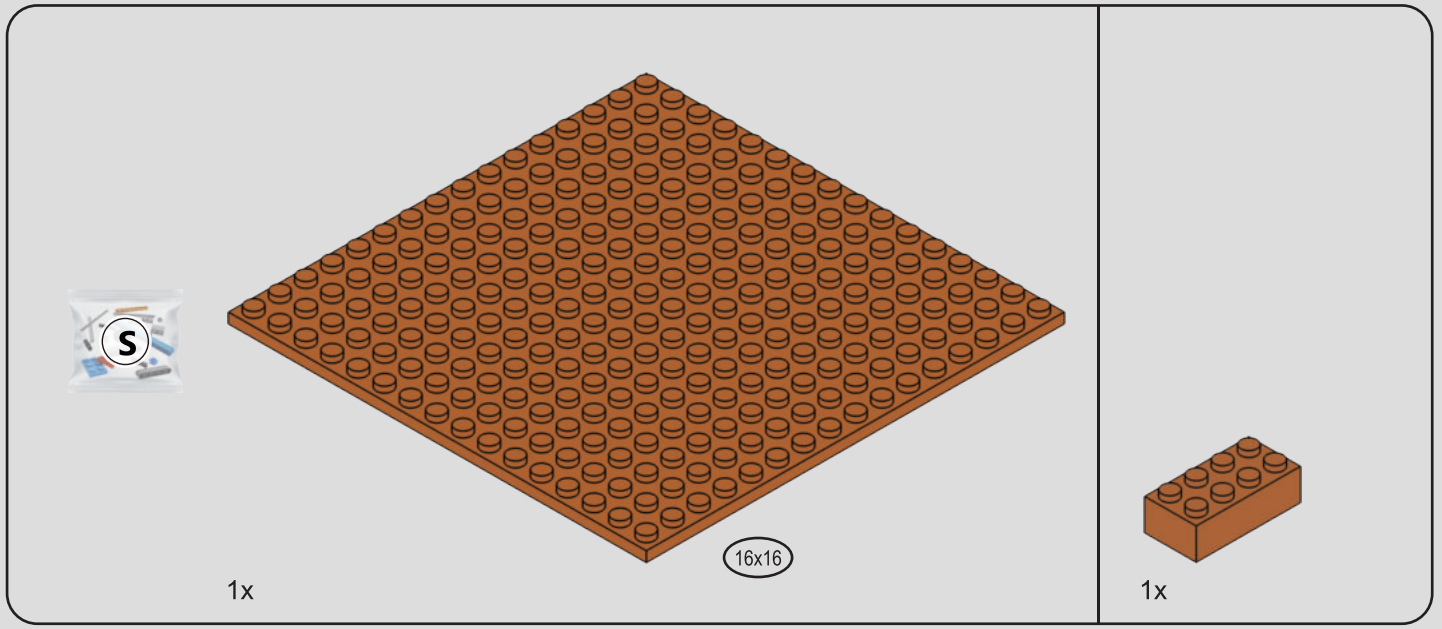

37

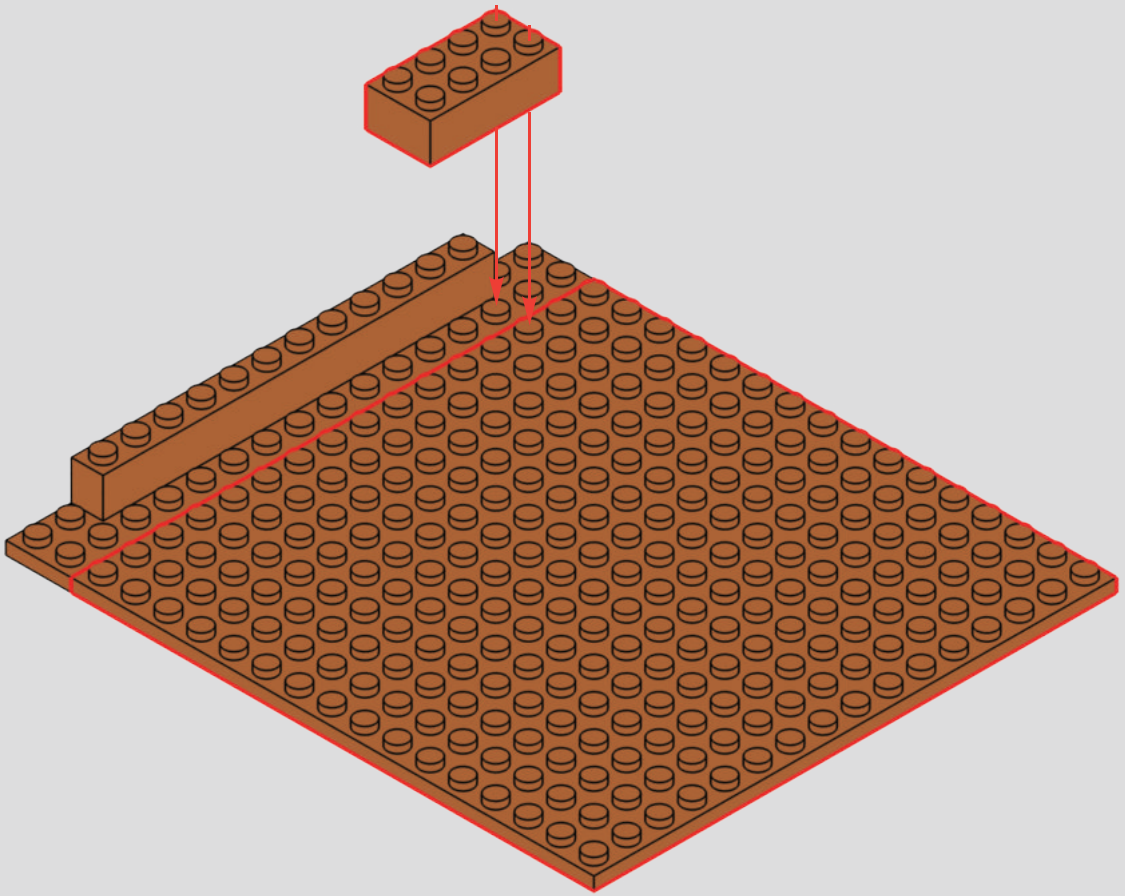

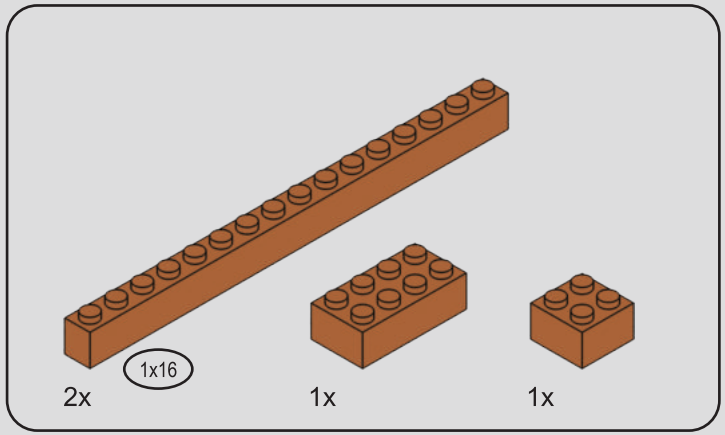

38

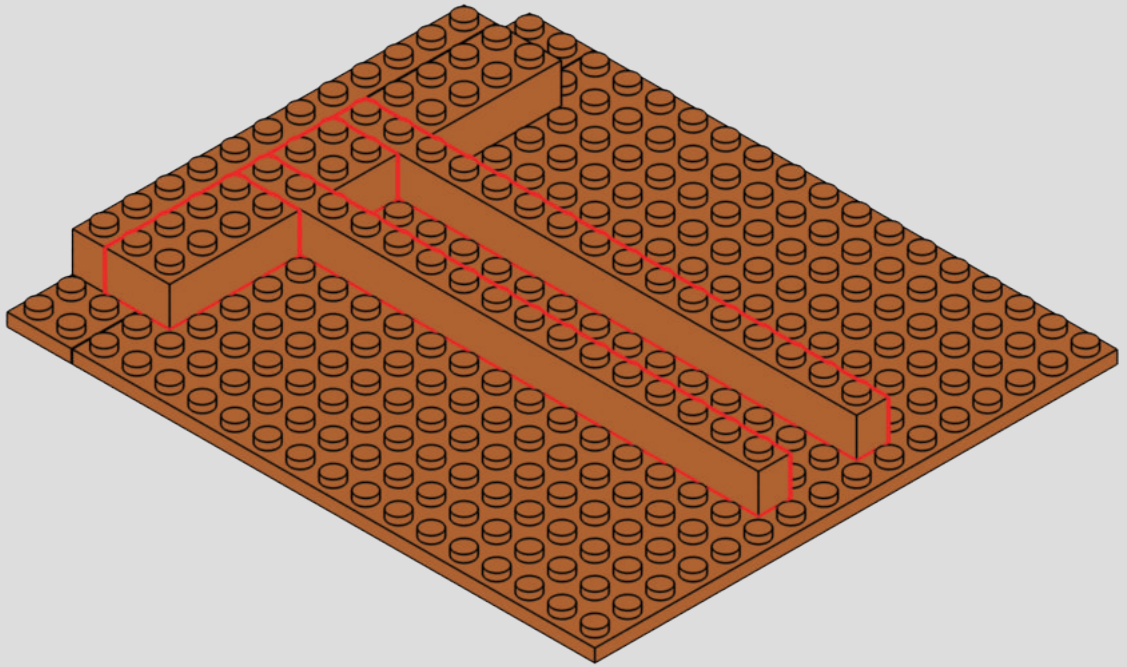

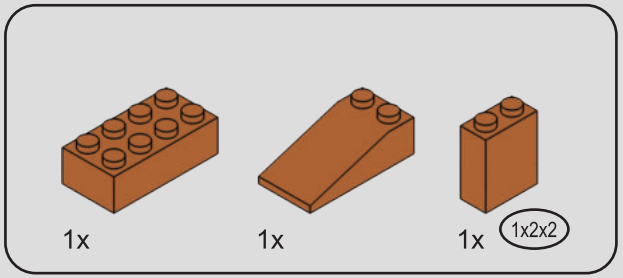

39

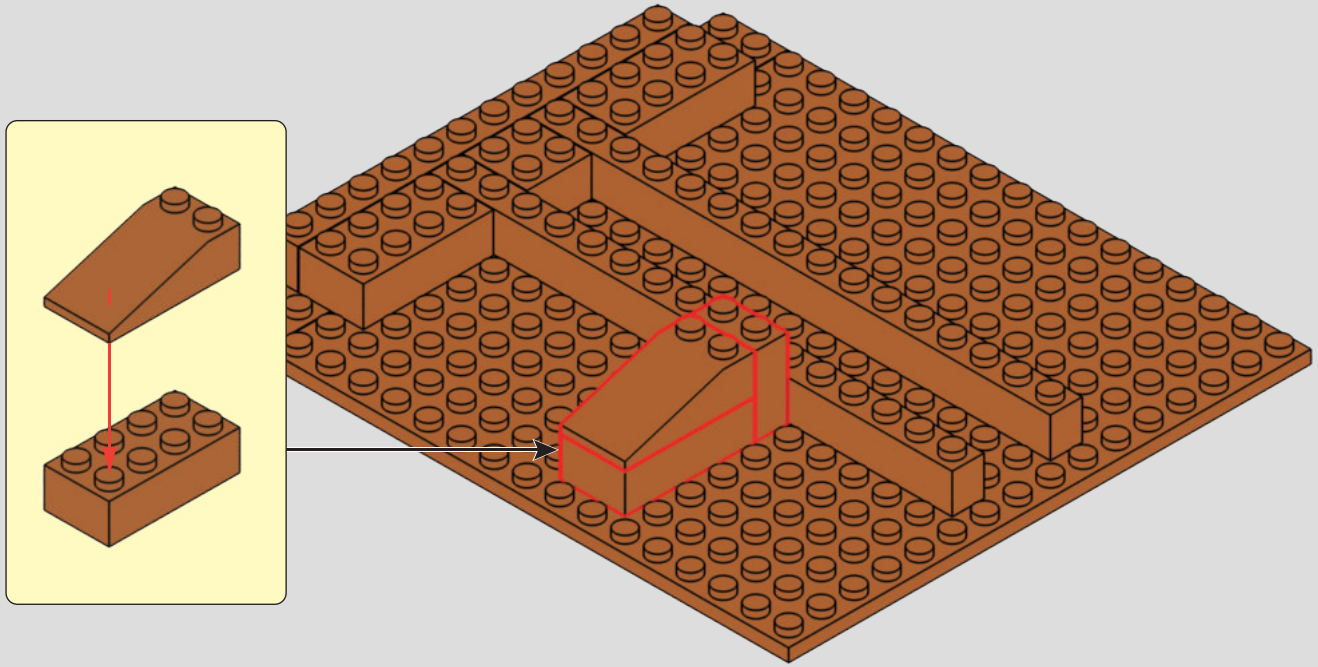

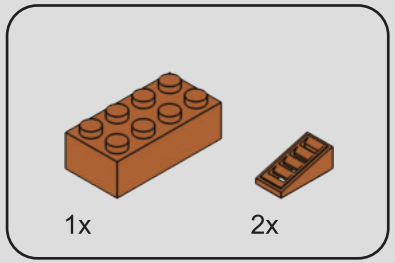

40

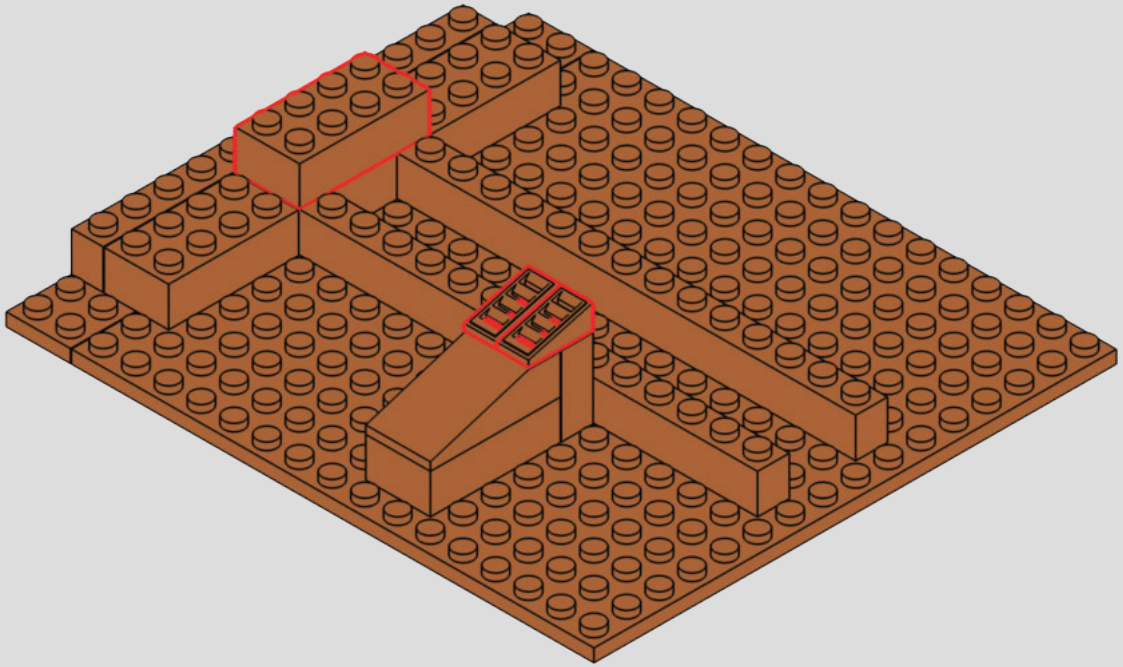

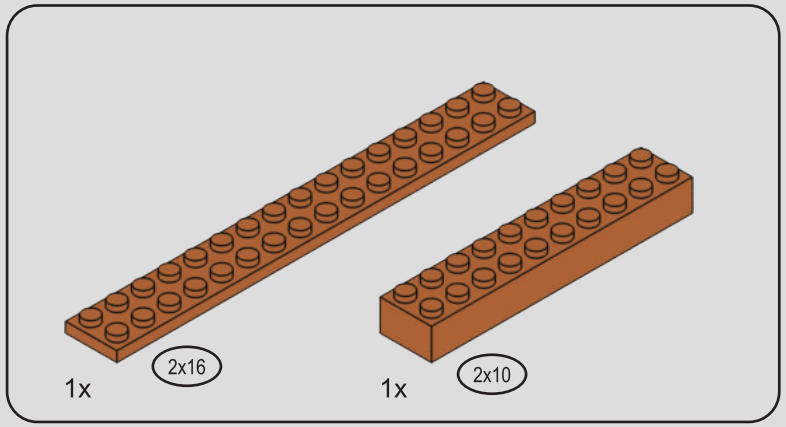

41

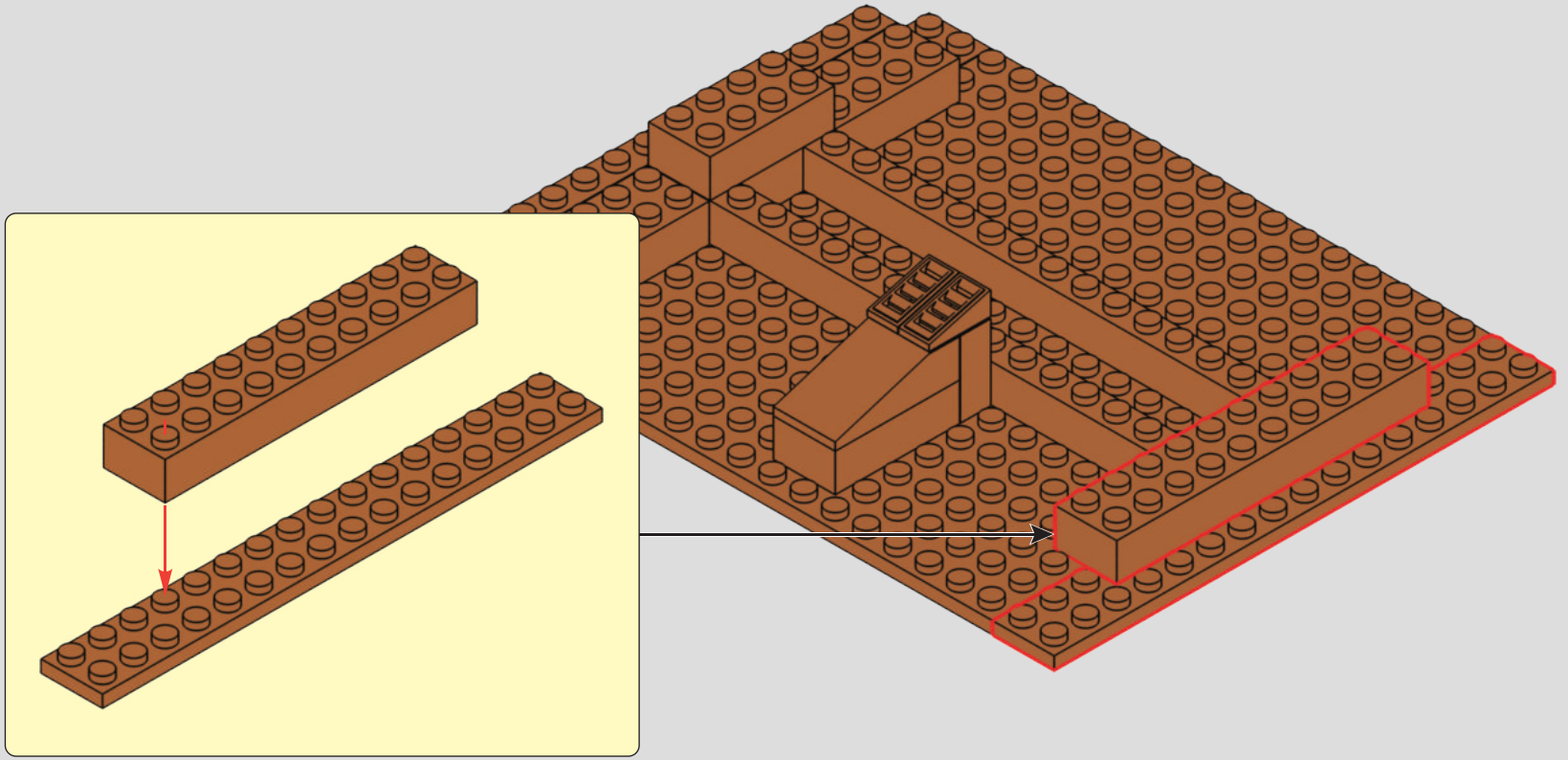

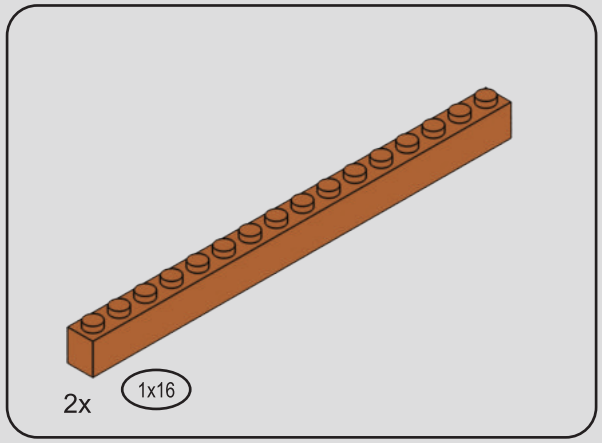

42

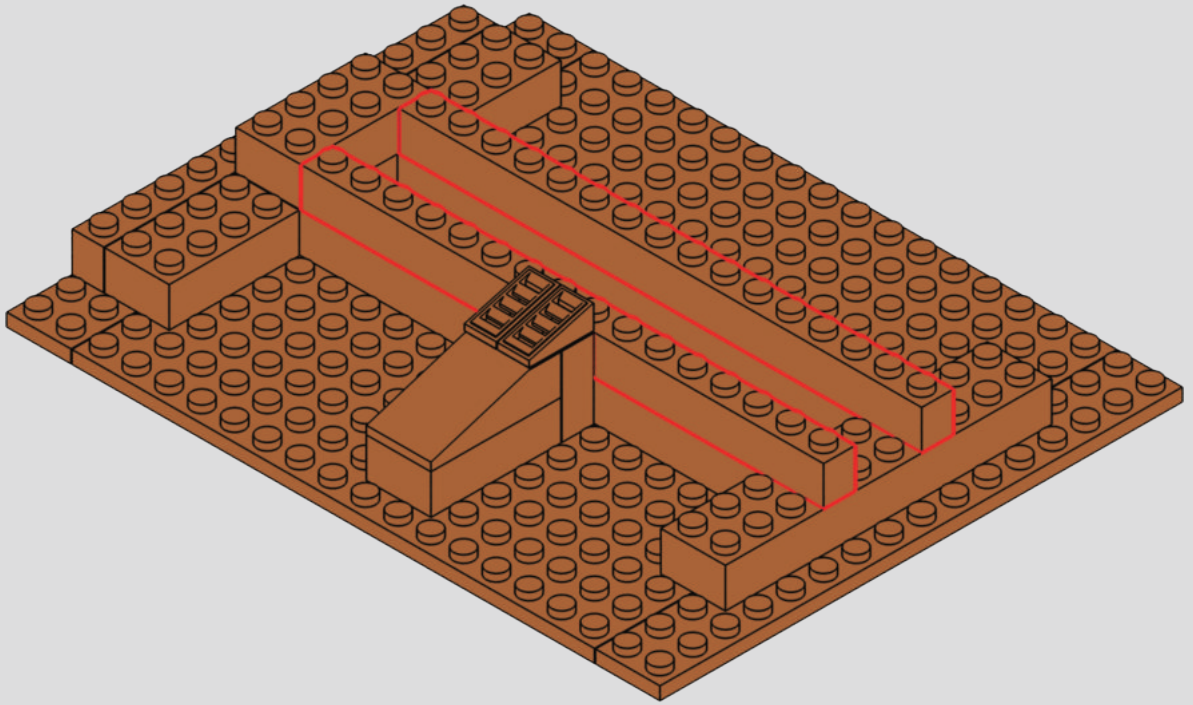

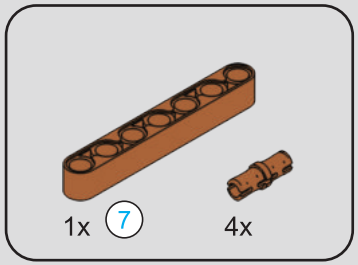

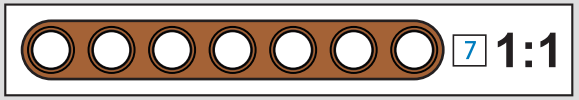

43

1

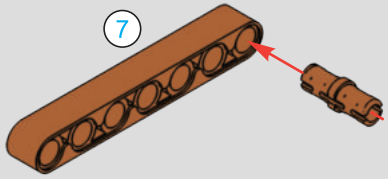

2

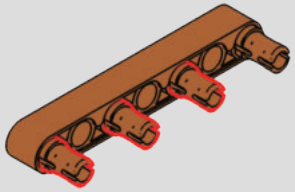

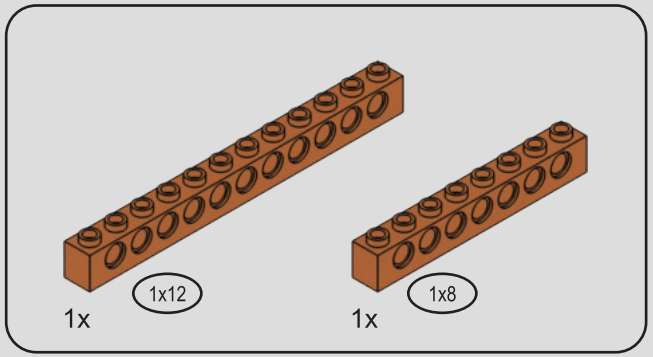

44

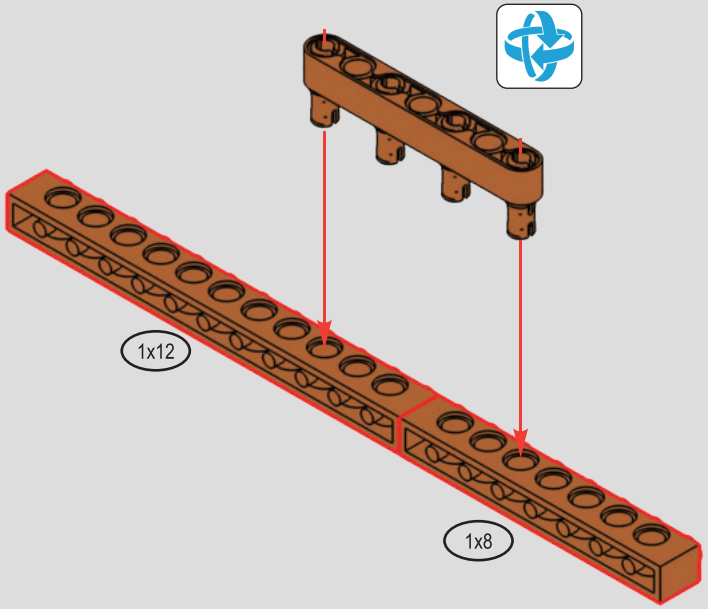

45

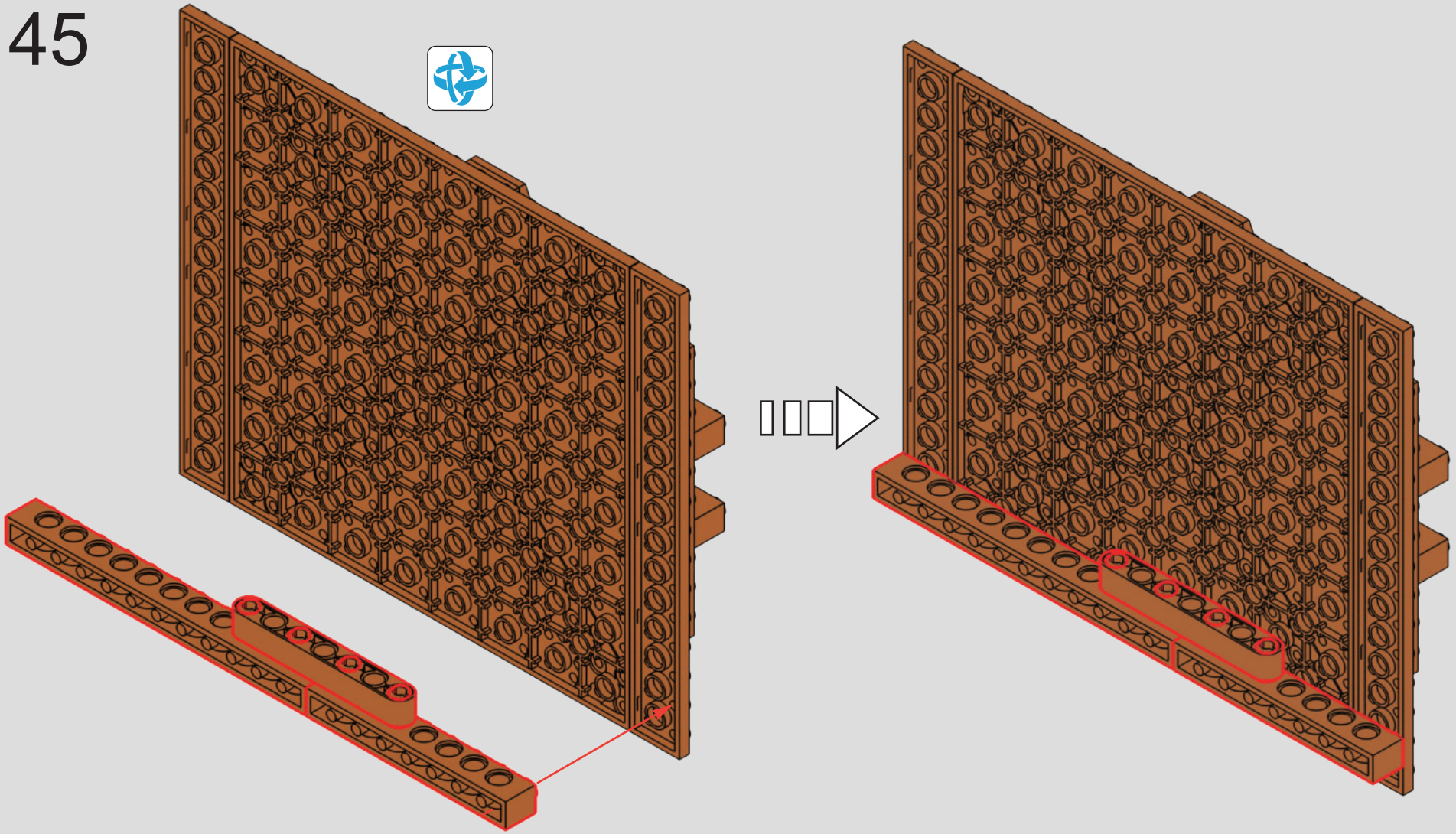

46

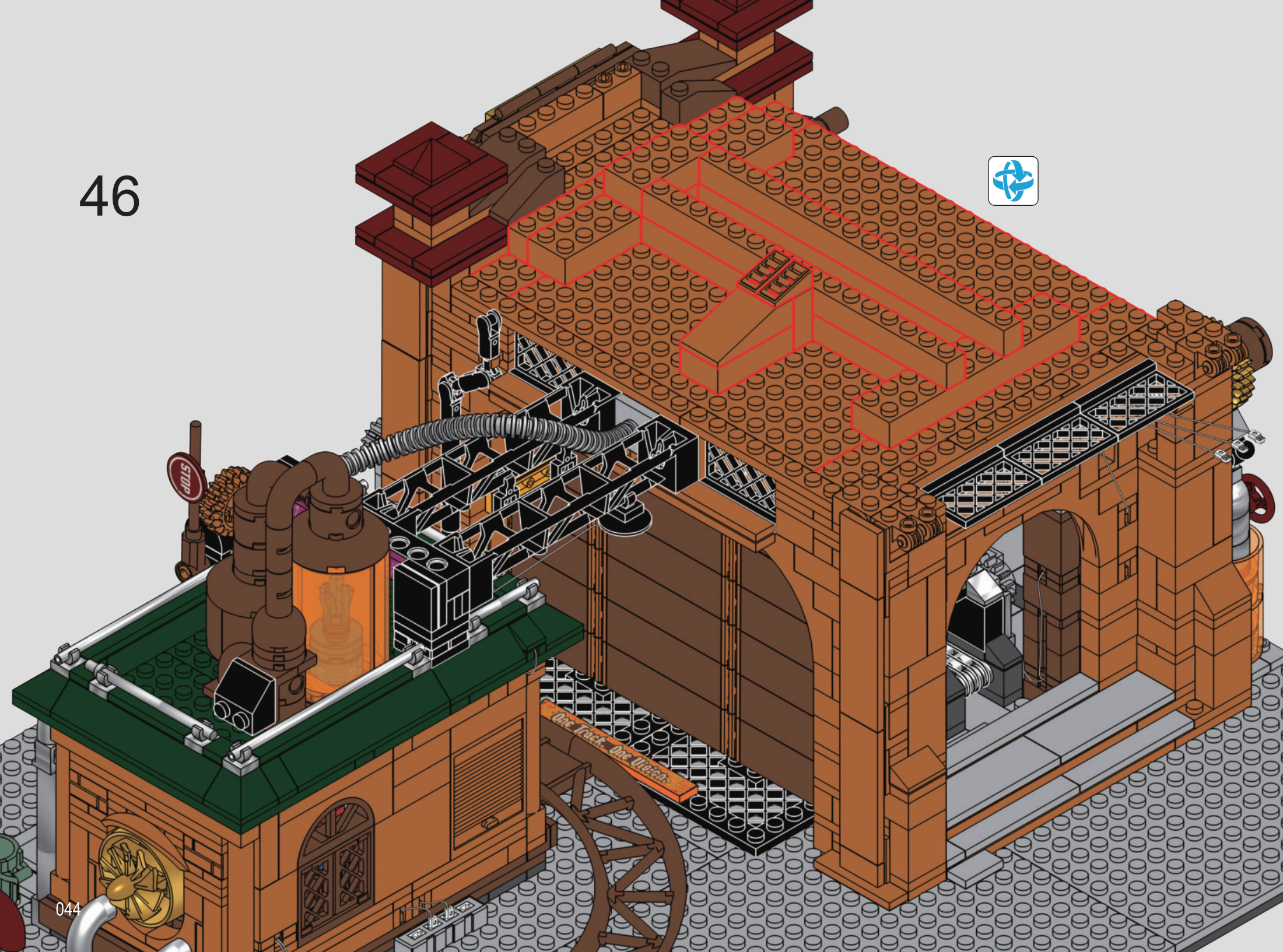

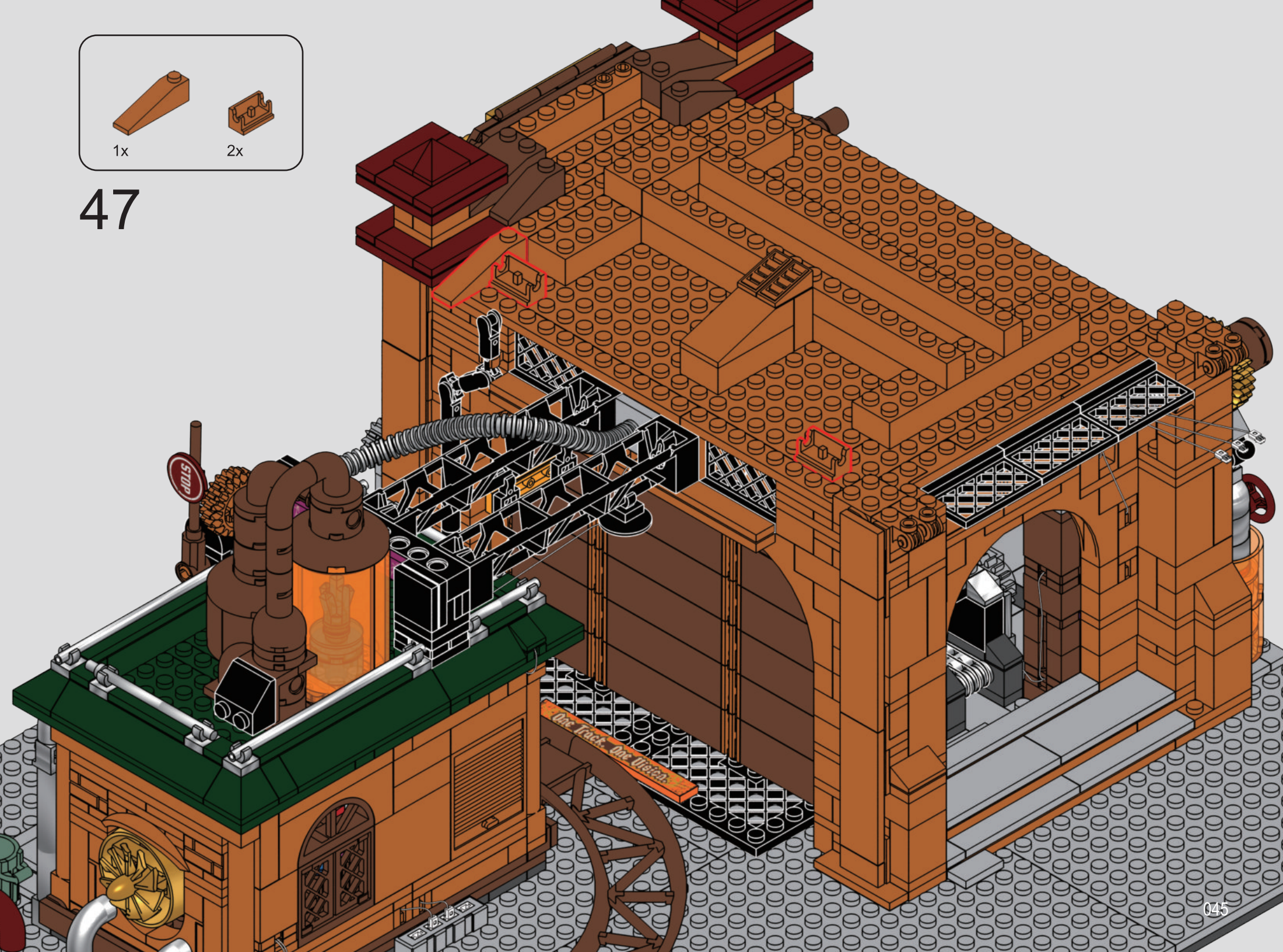
1x
2x
47
STOP
One track. One direction.

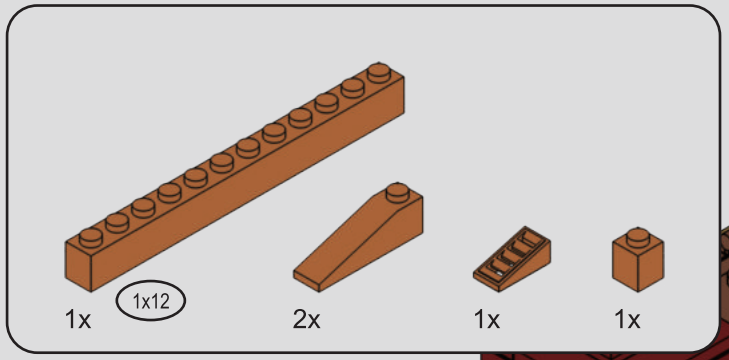

48

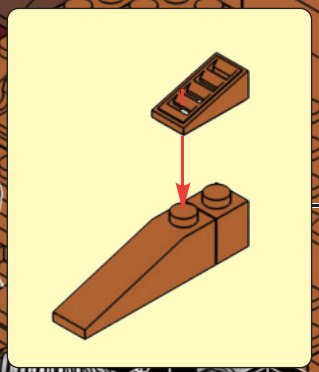

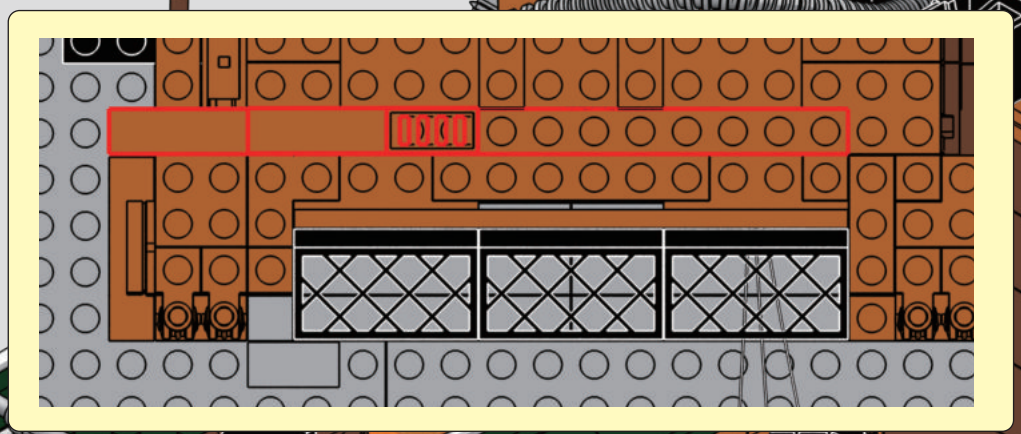

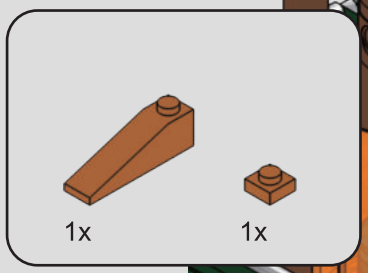

49

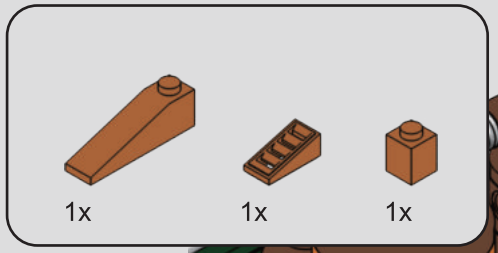

50

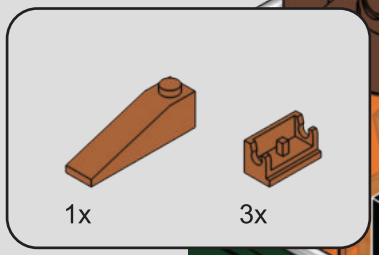

51

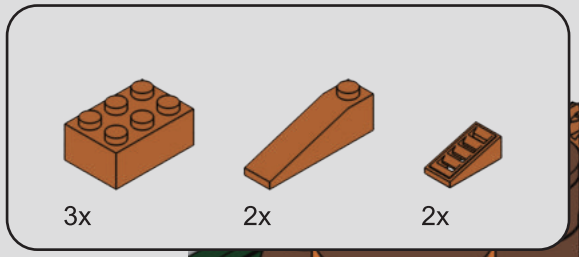

52

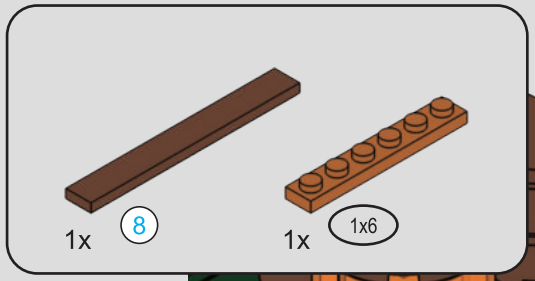



53

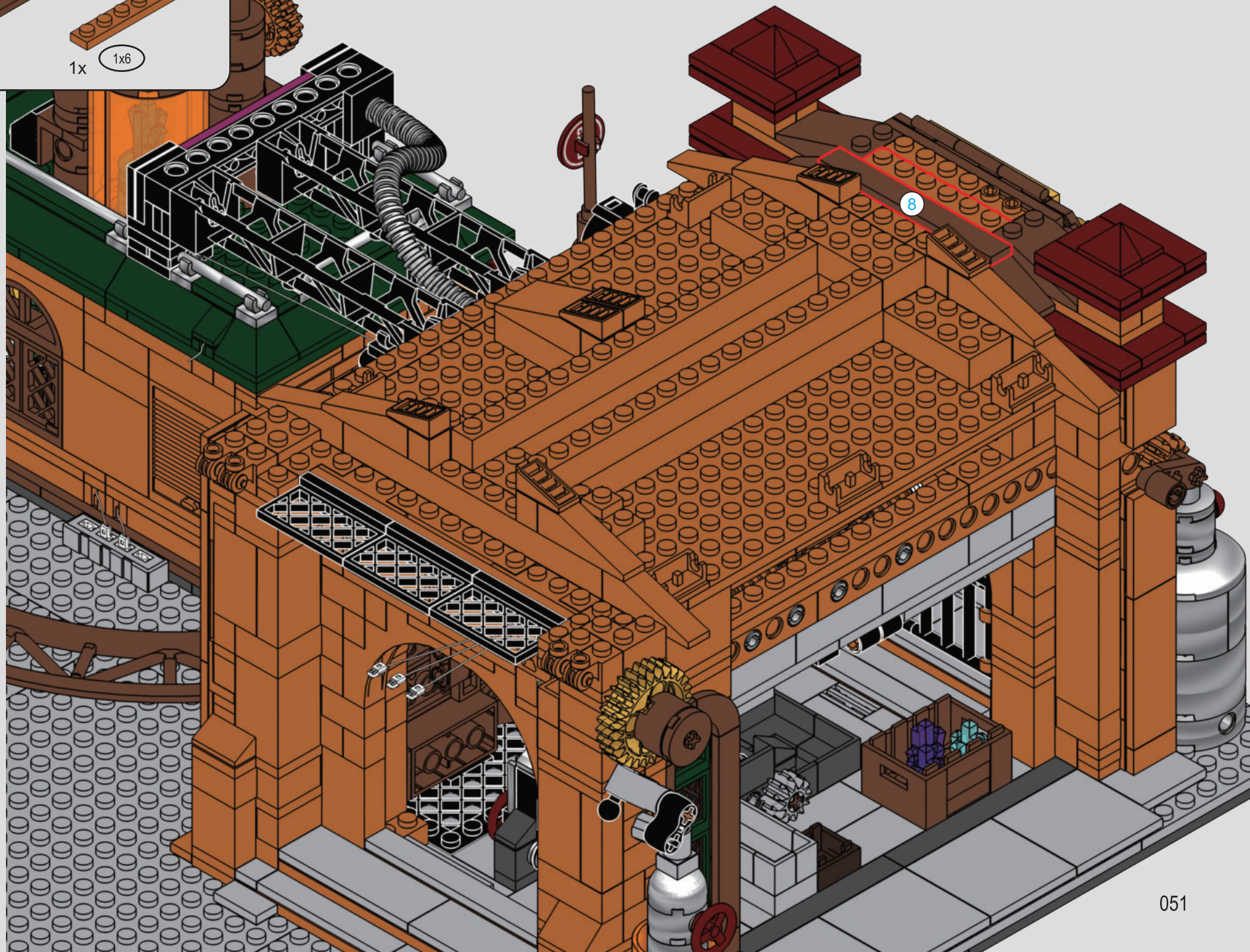

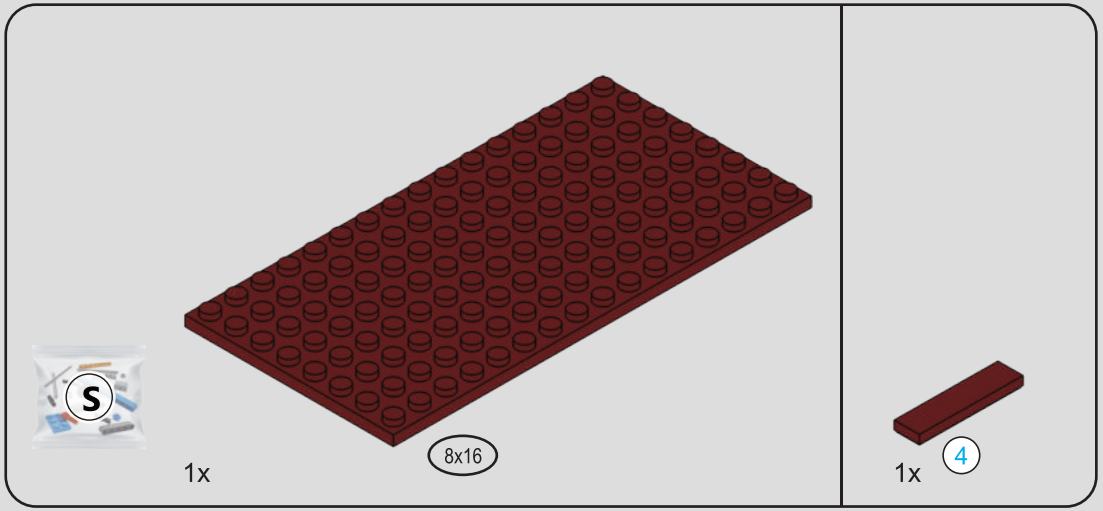

54

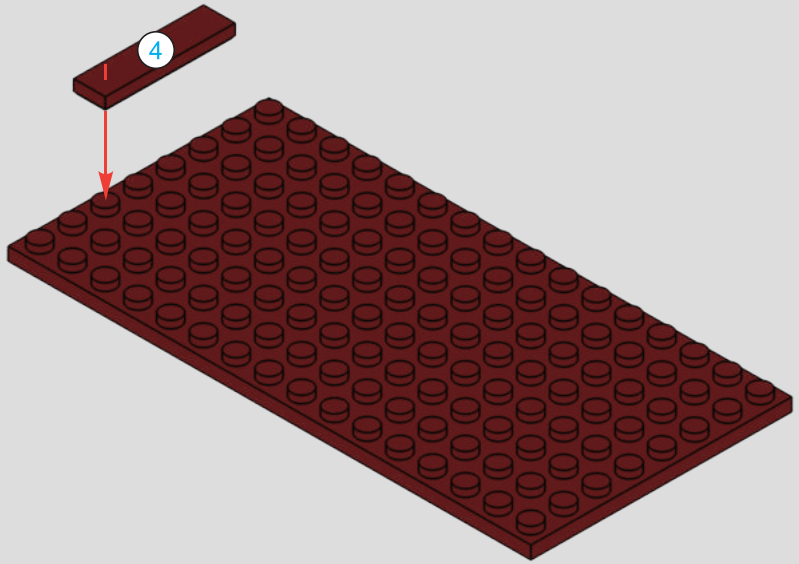

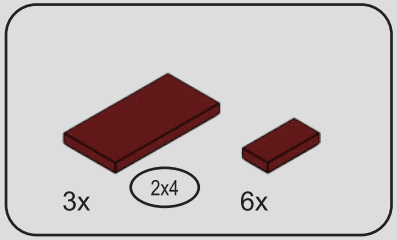

55

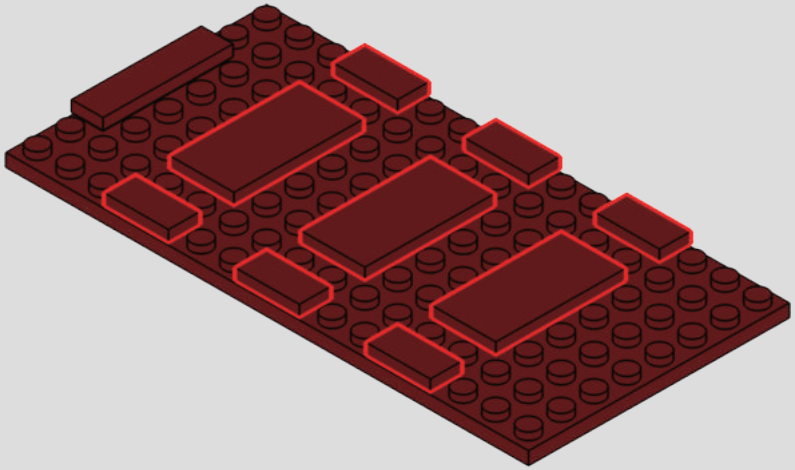



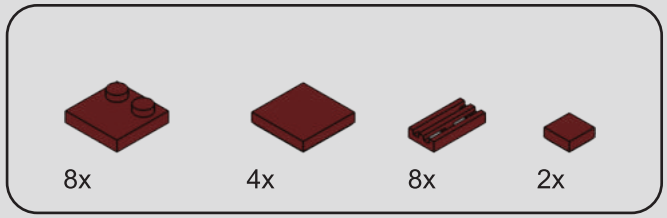

56

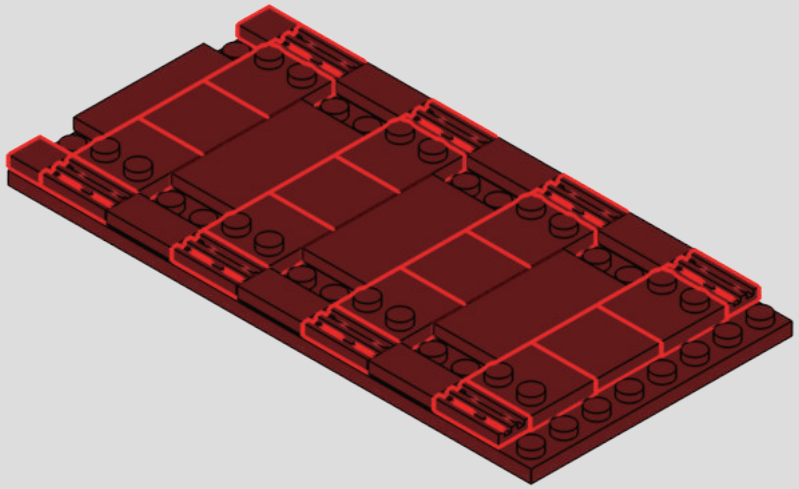

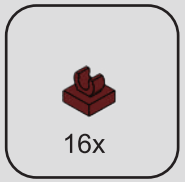

57

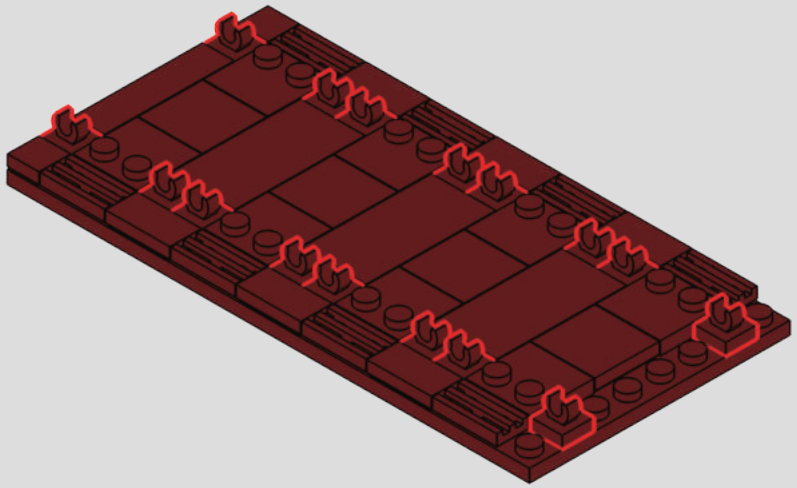

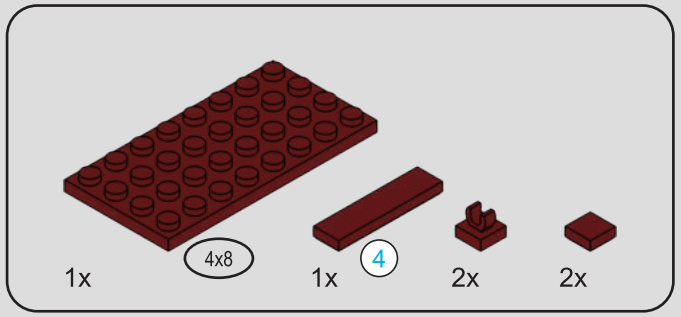

58

1

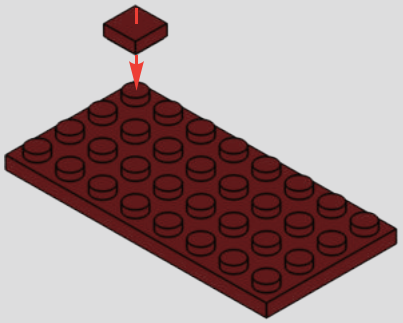

2

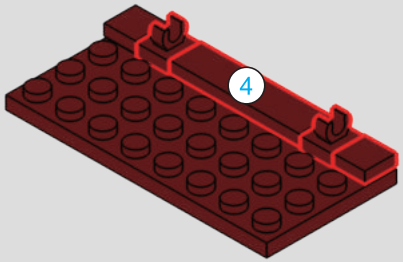



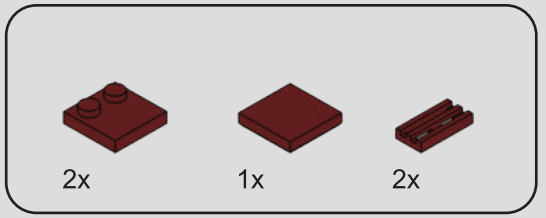

59

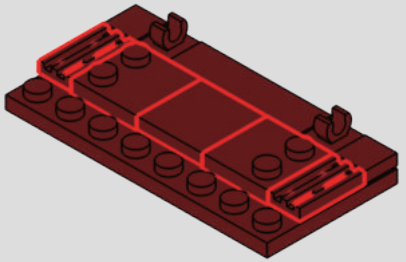

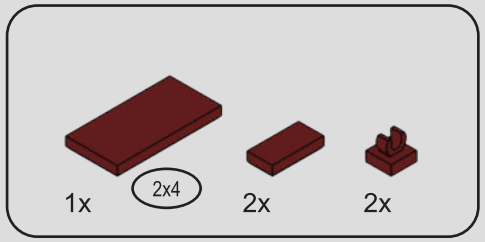

60

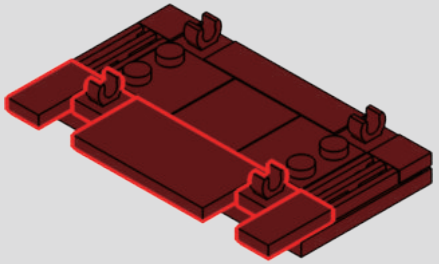

61

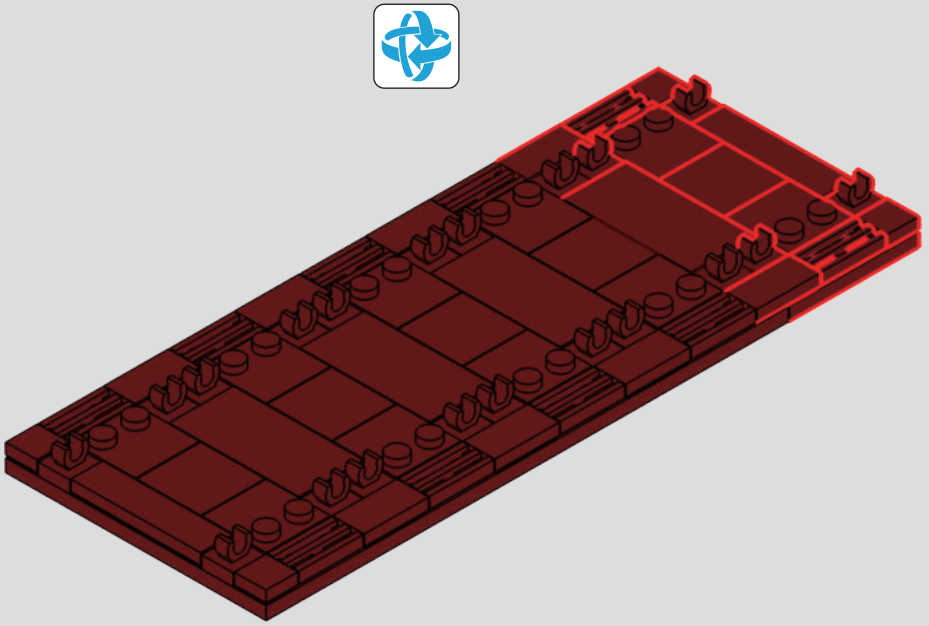

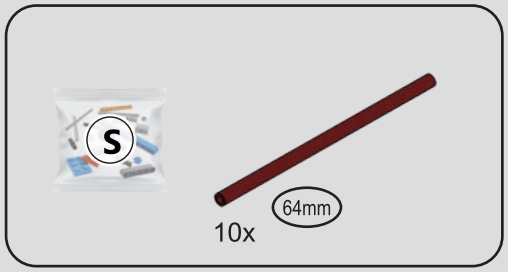

62

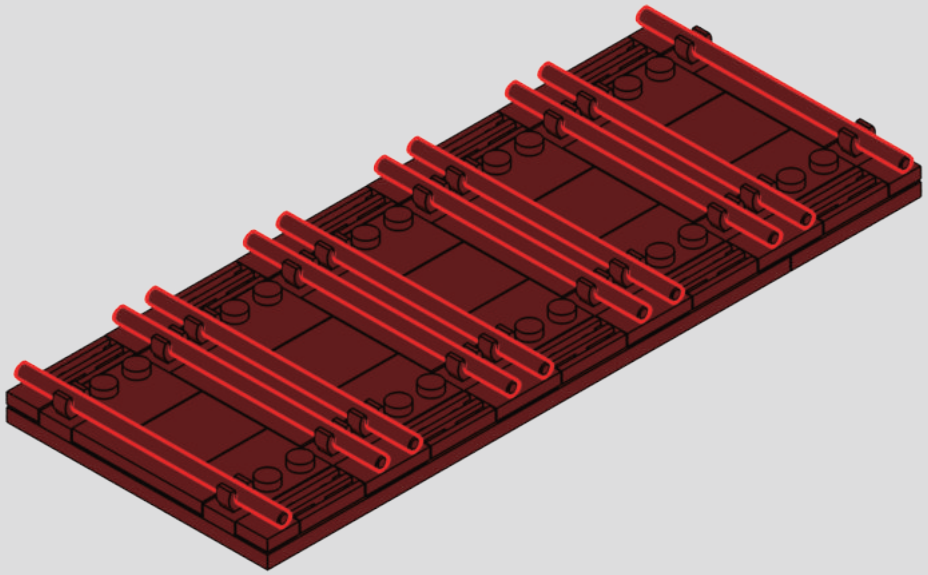

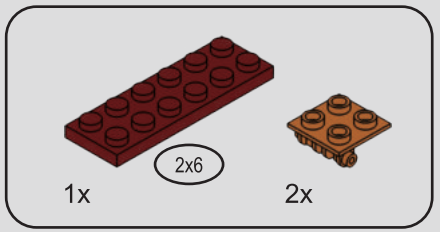

63



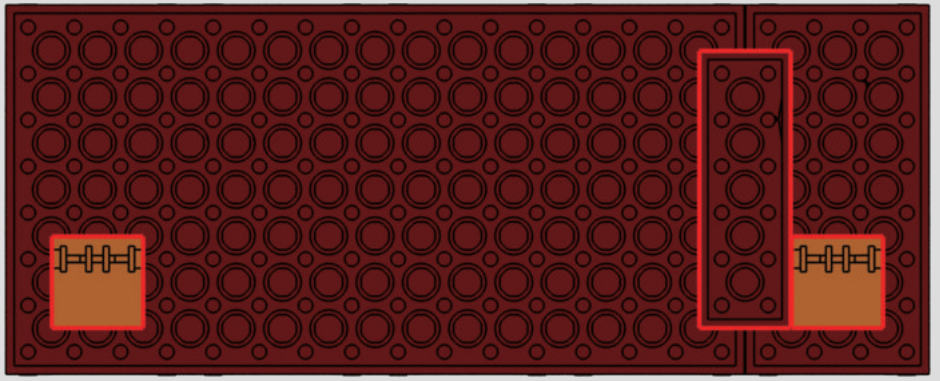

64

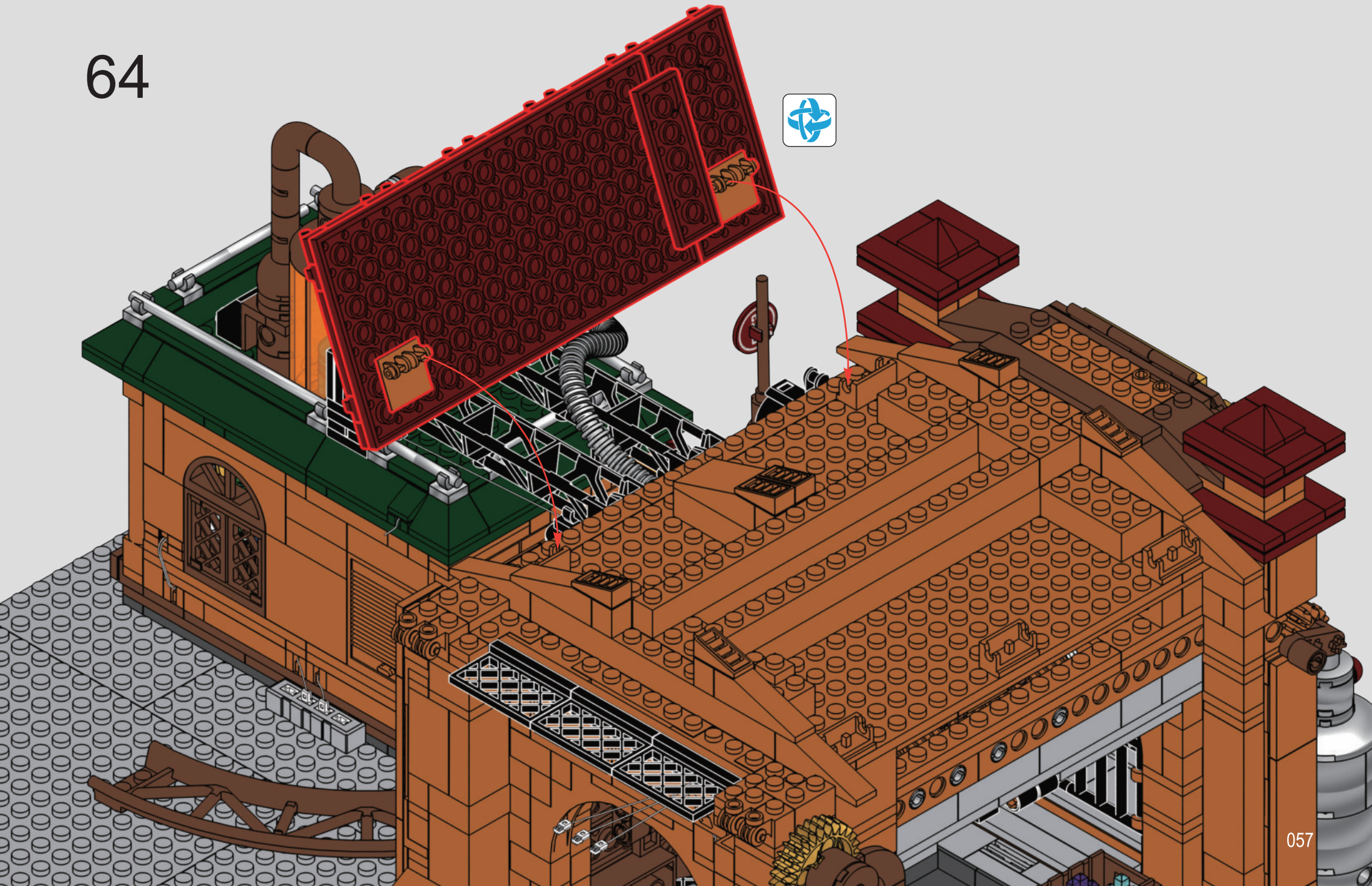

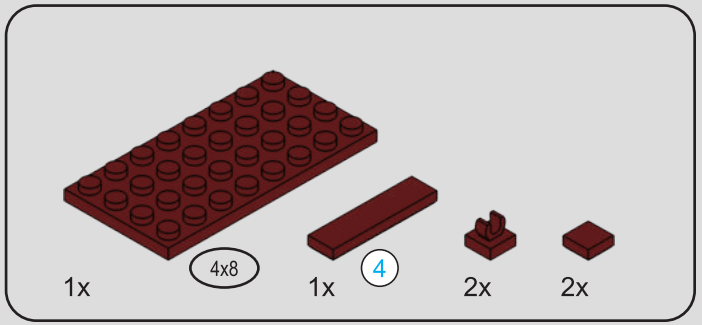

65

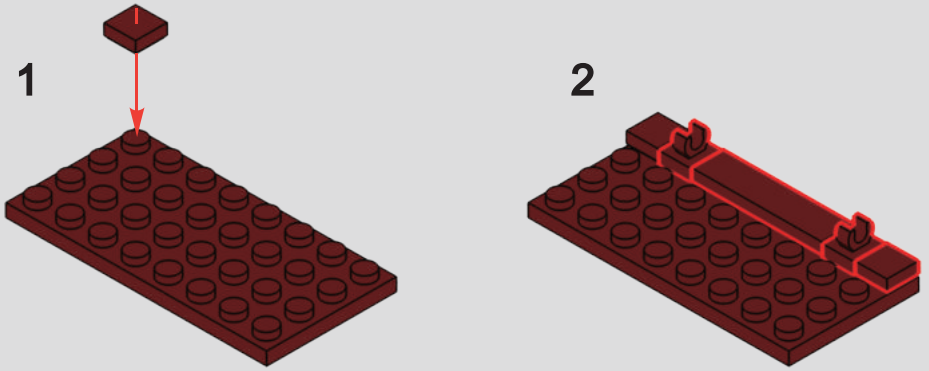

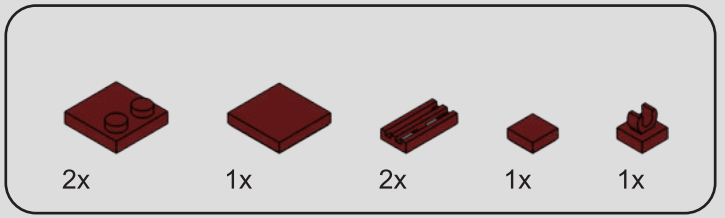

66

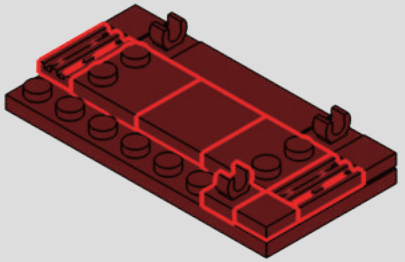



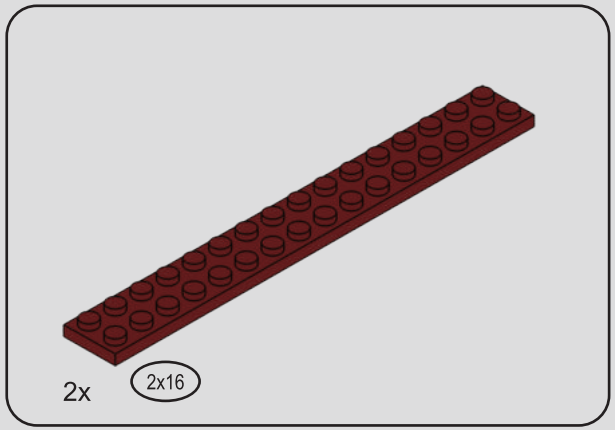

67

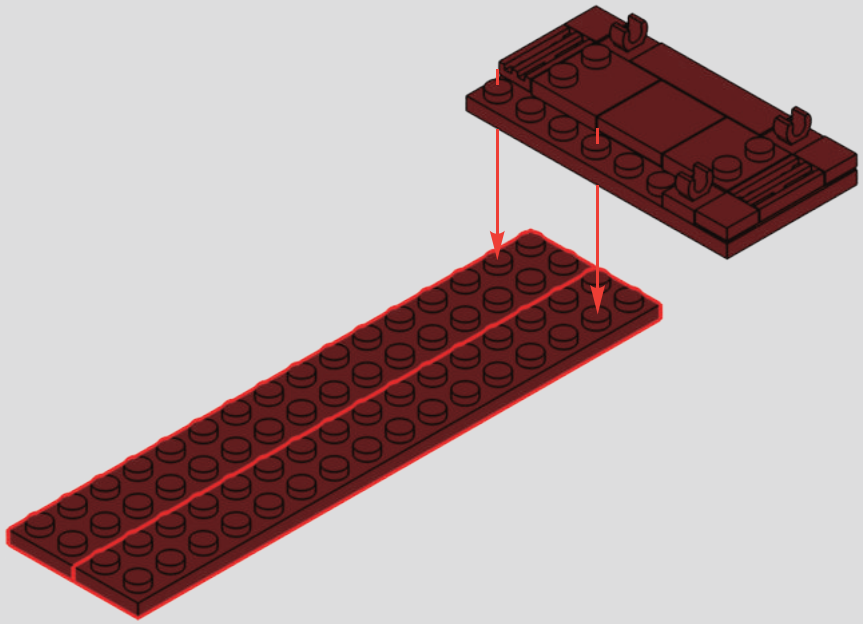

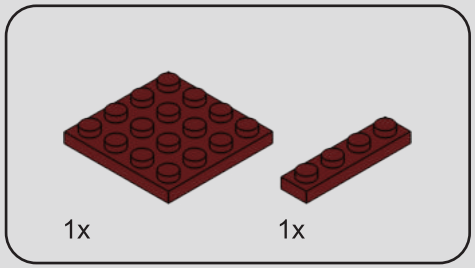

68

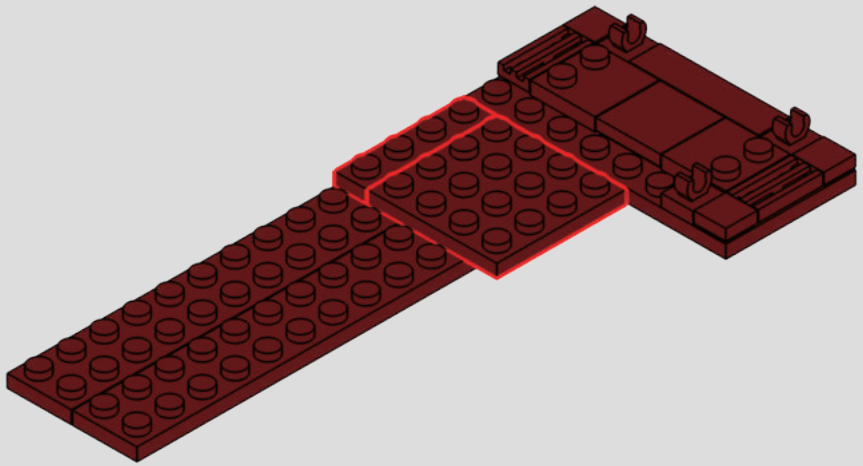

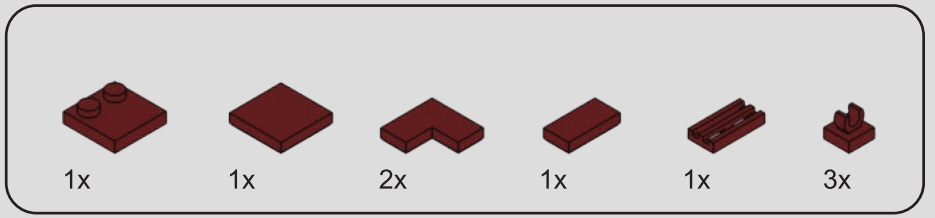

69

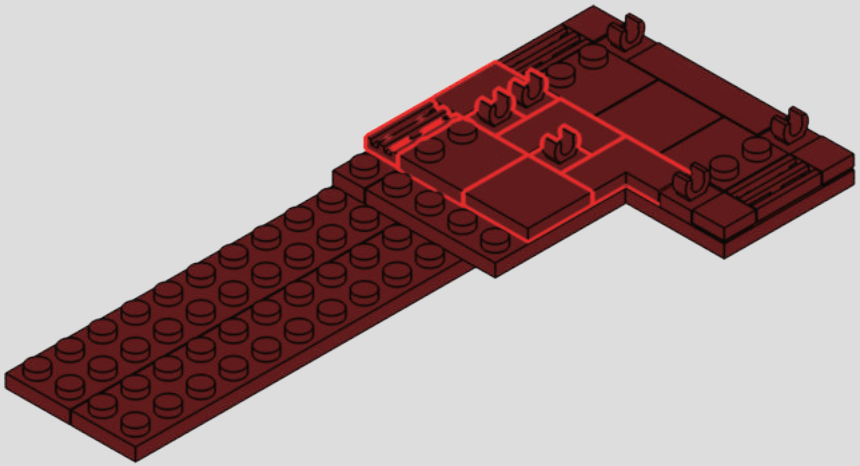

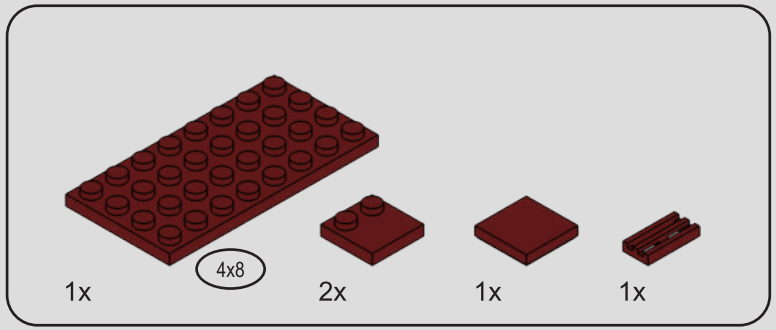

70

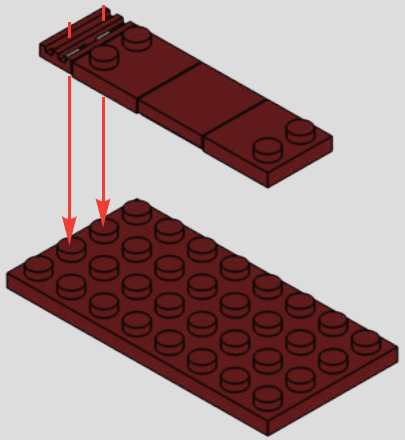

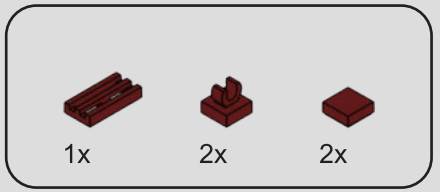

71

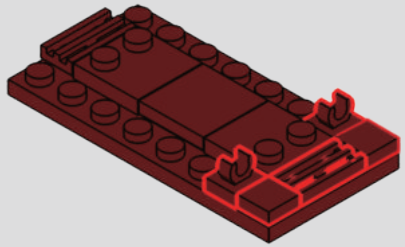

72

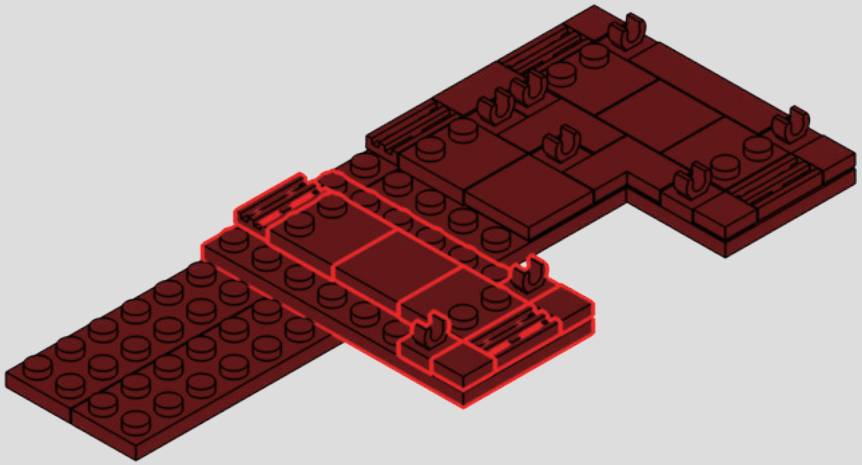

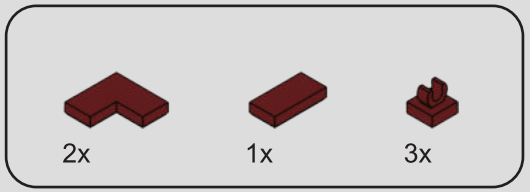

73

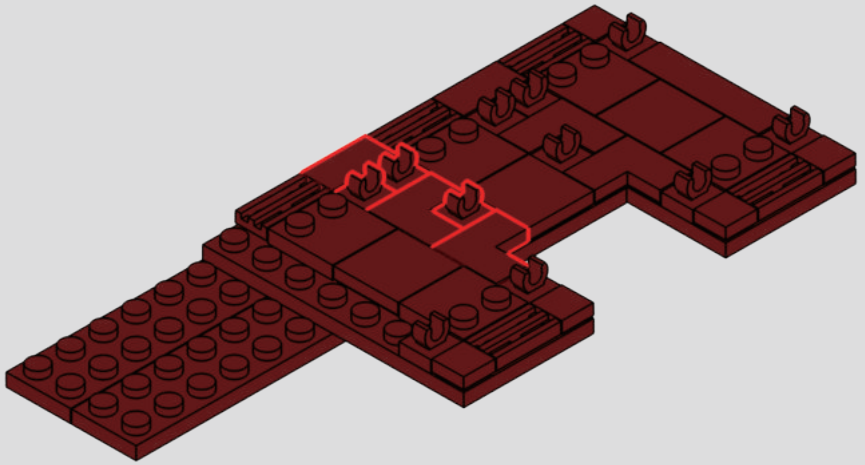

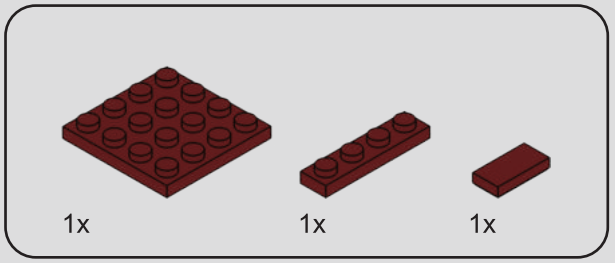

74

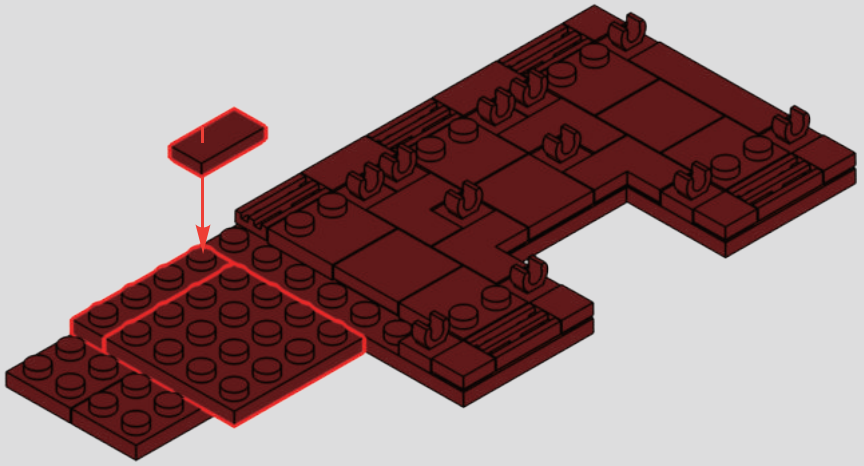

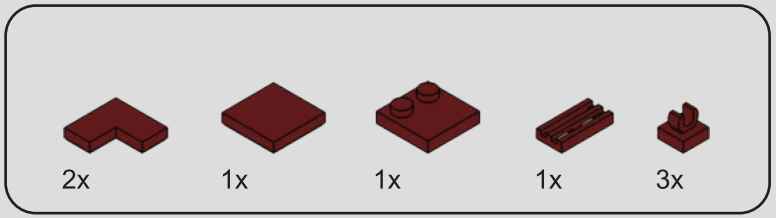

75

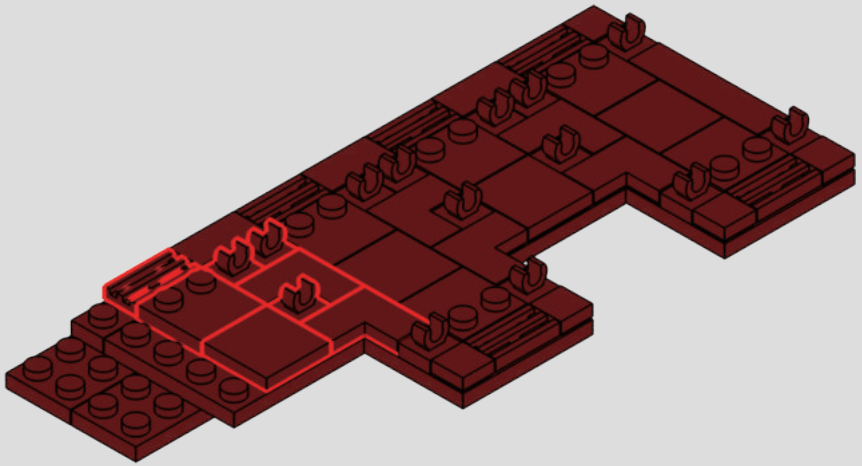

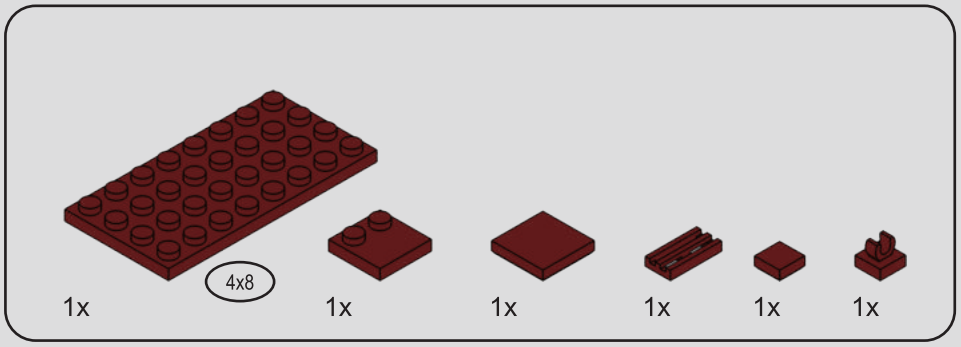

76

1

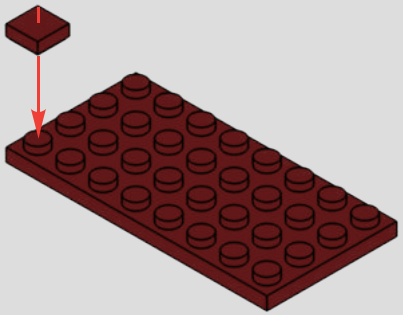

2

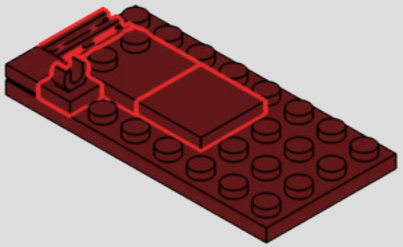

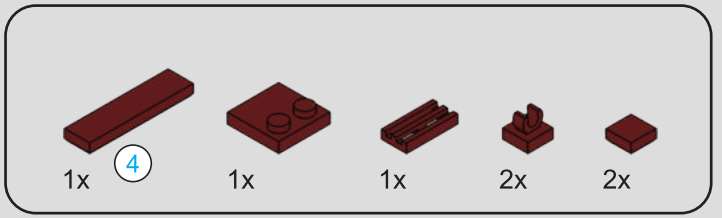

77

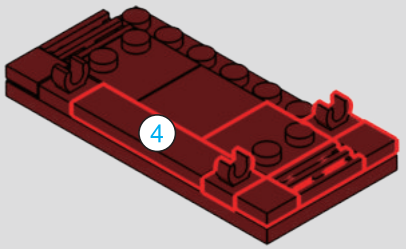



78

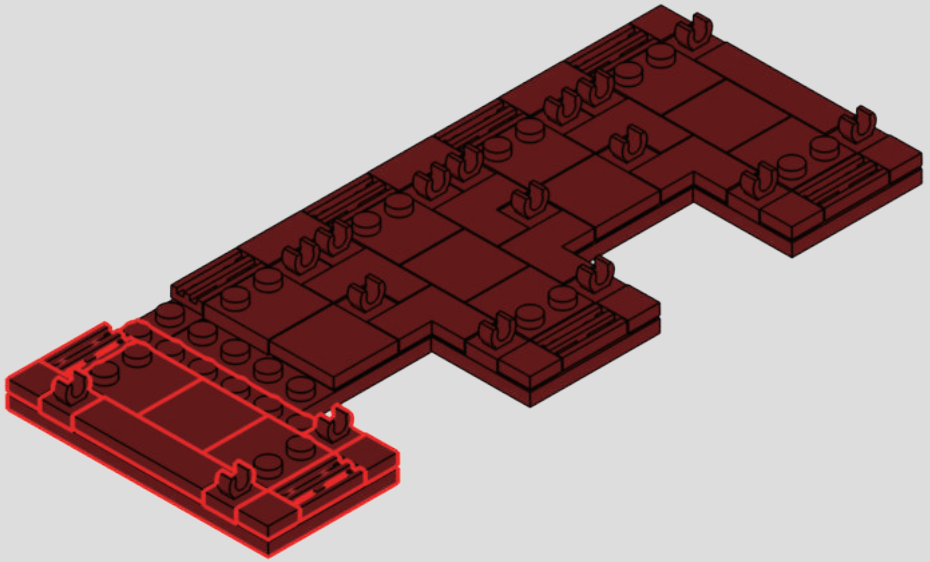

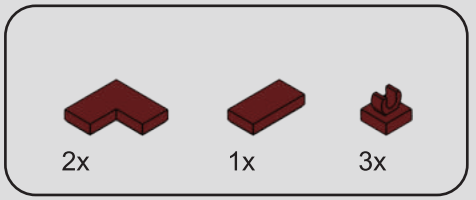

79

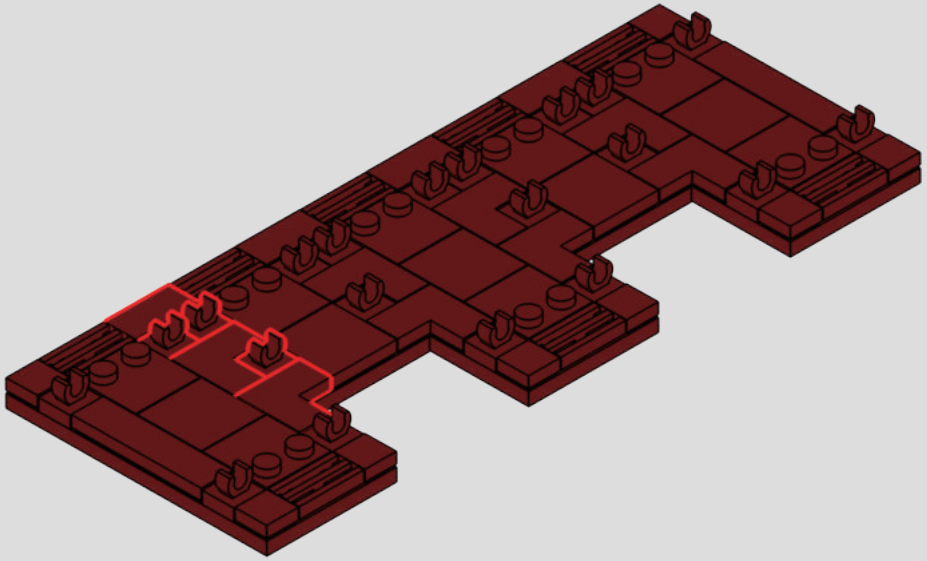

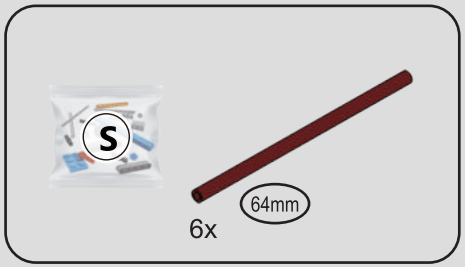

80

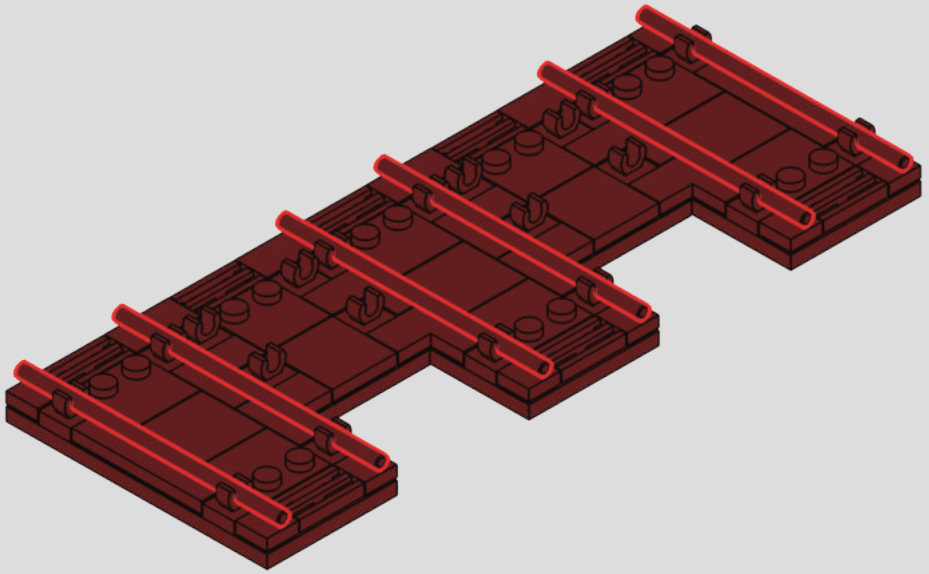

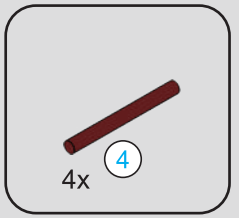



81

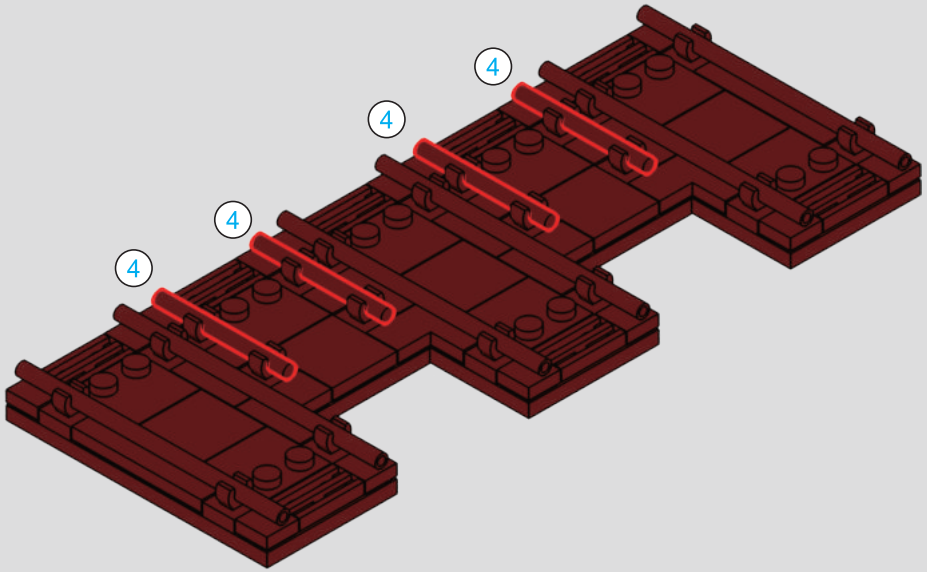



82

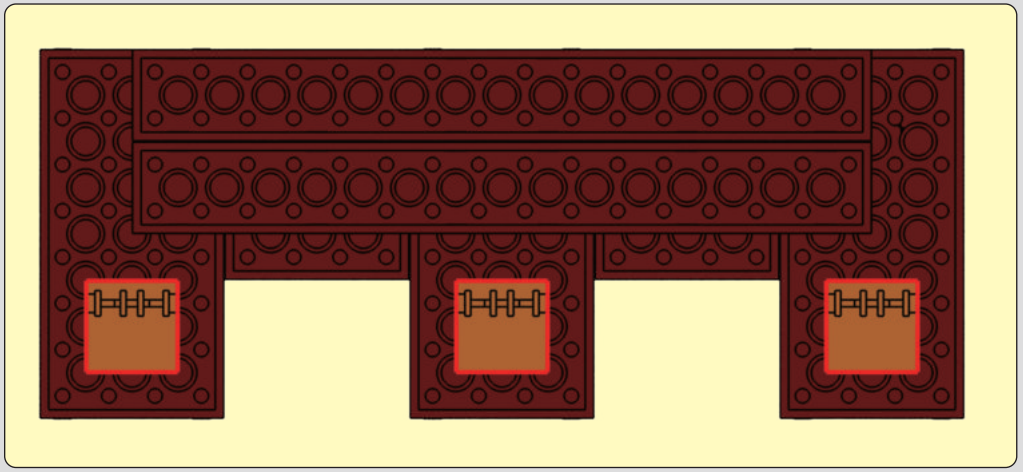

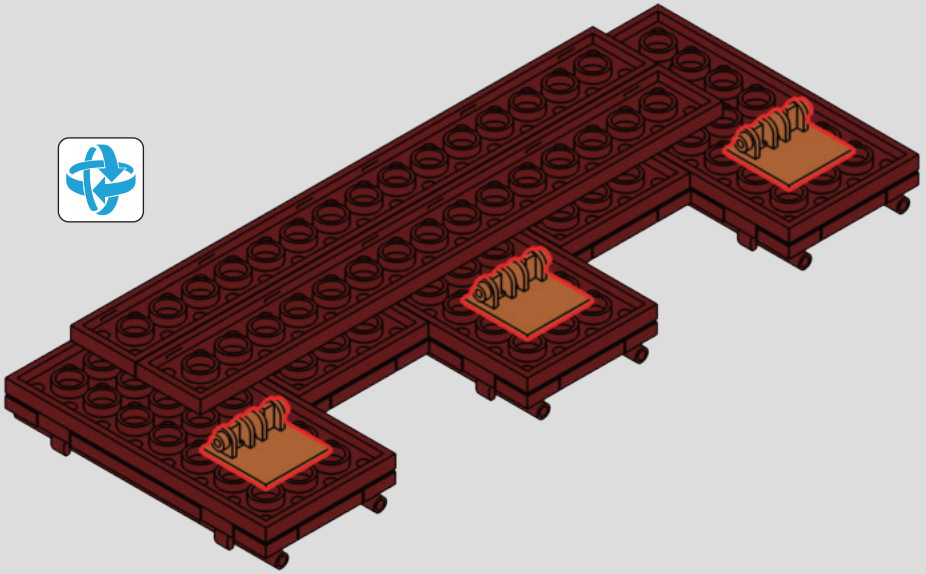

83

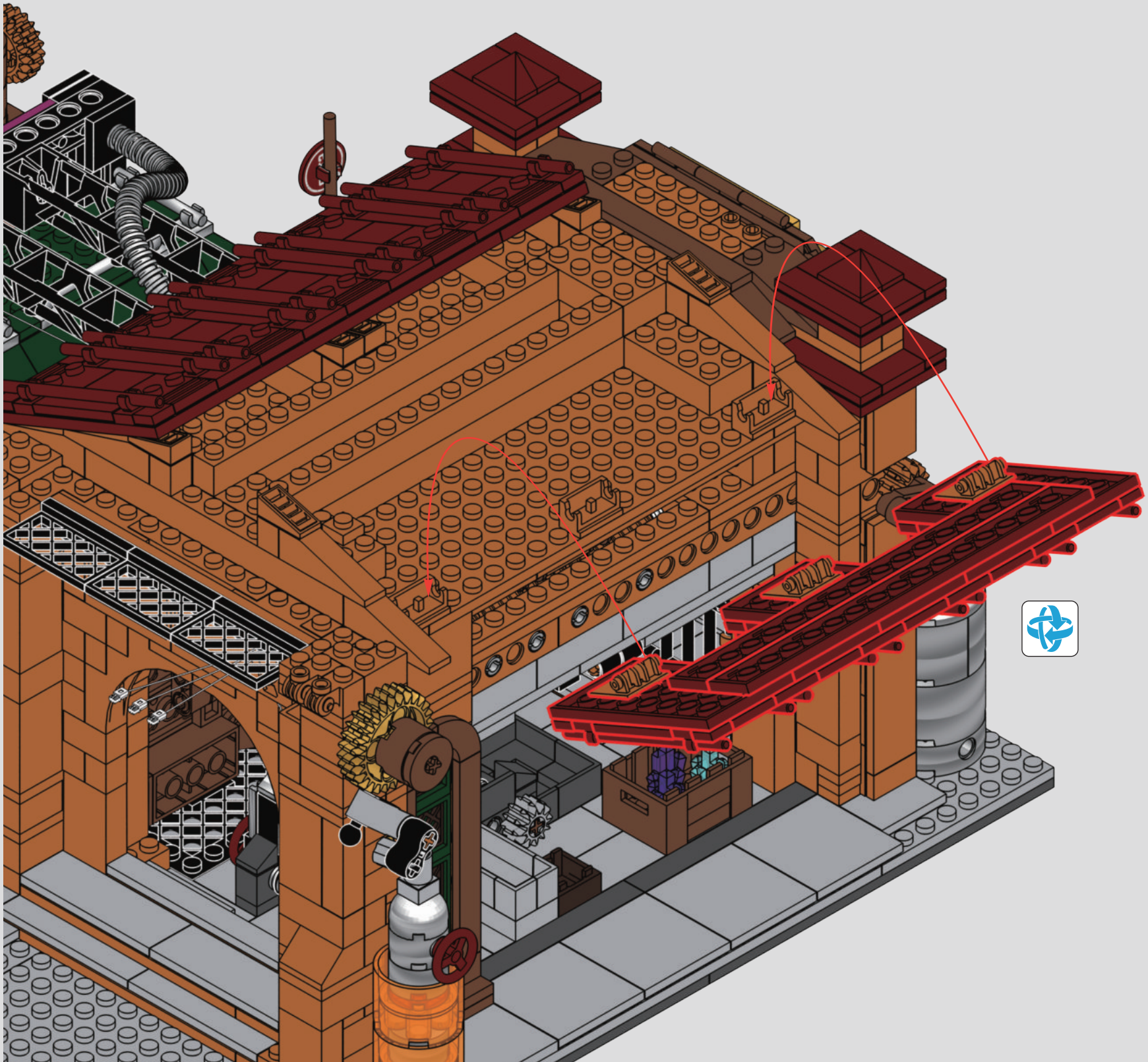

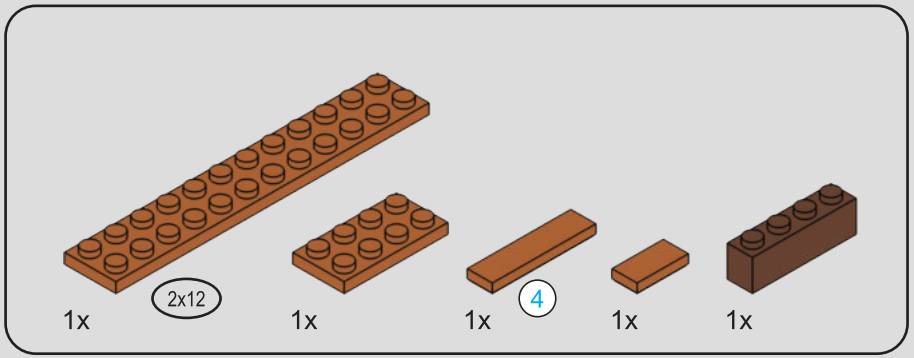

84



1

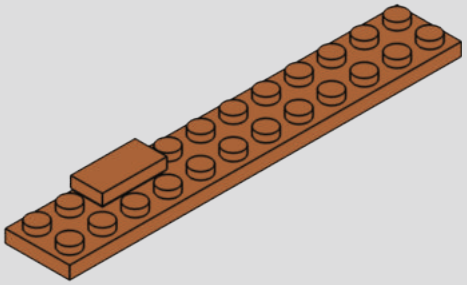

2

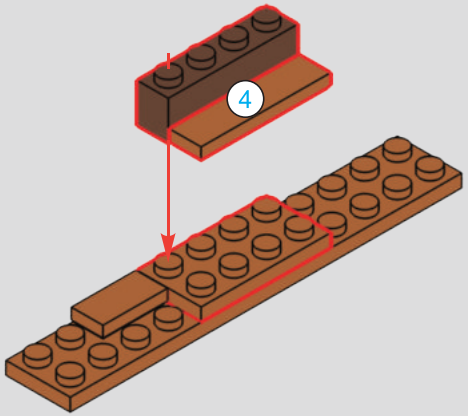

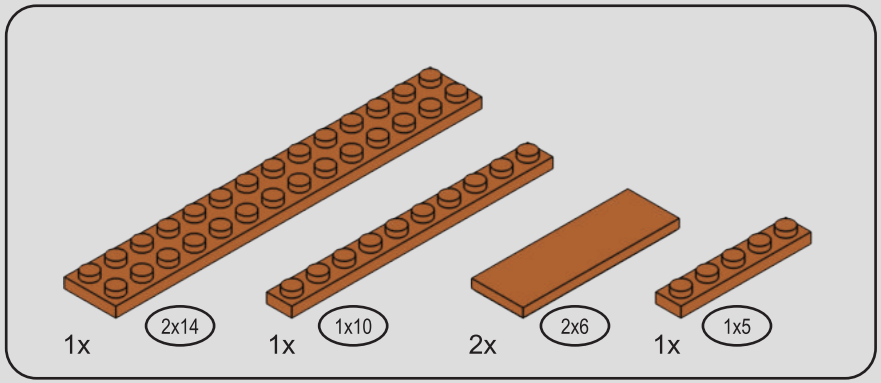

85

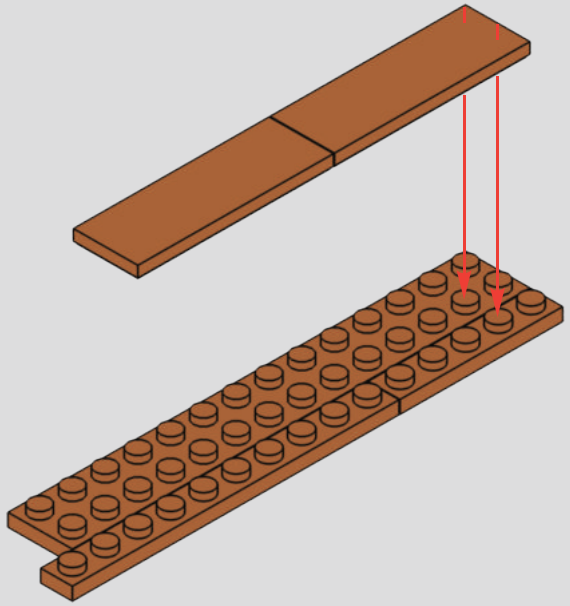

86

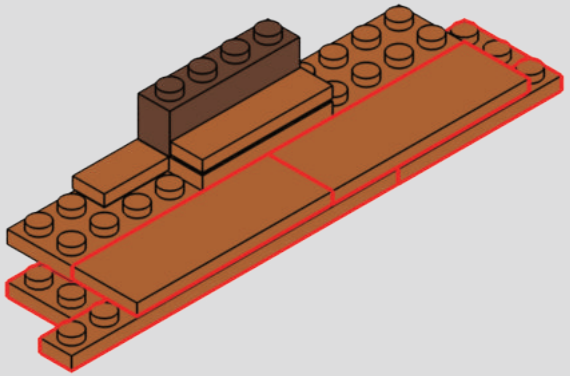

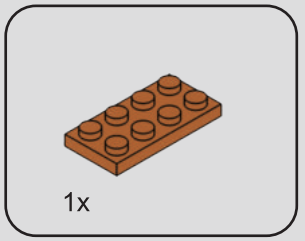

87

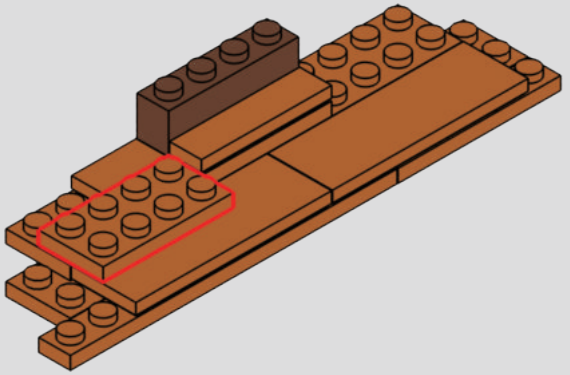

88

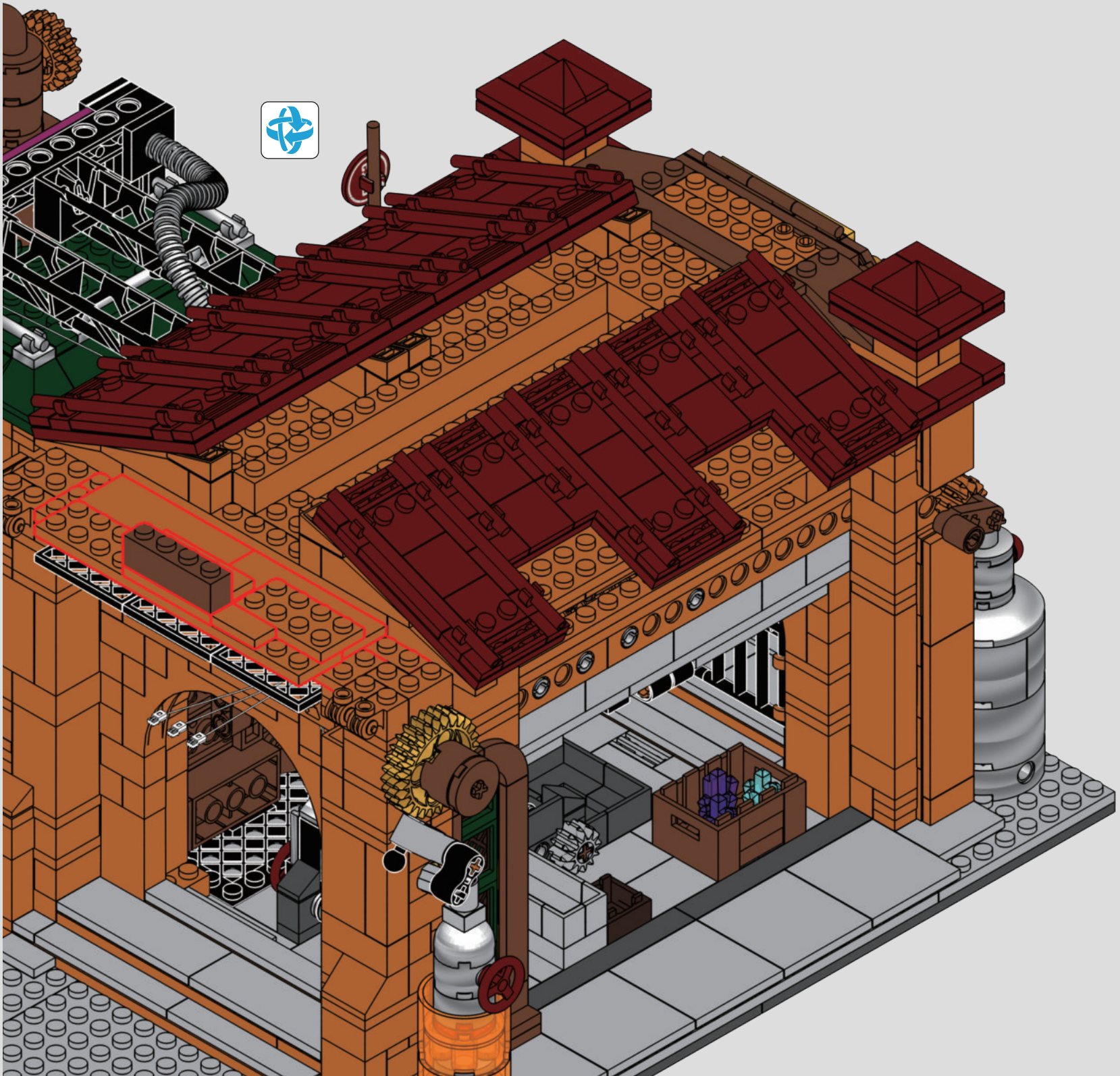

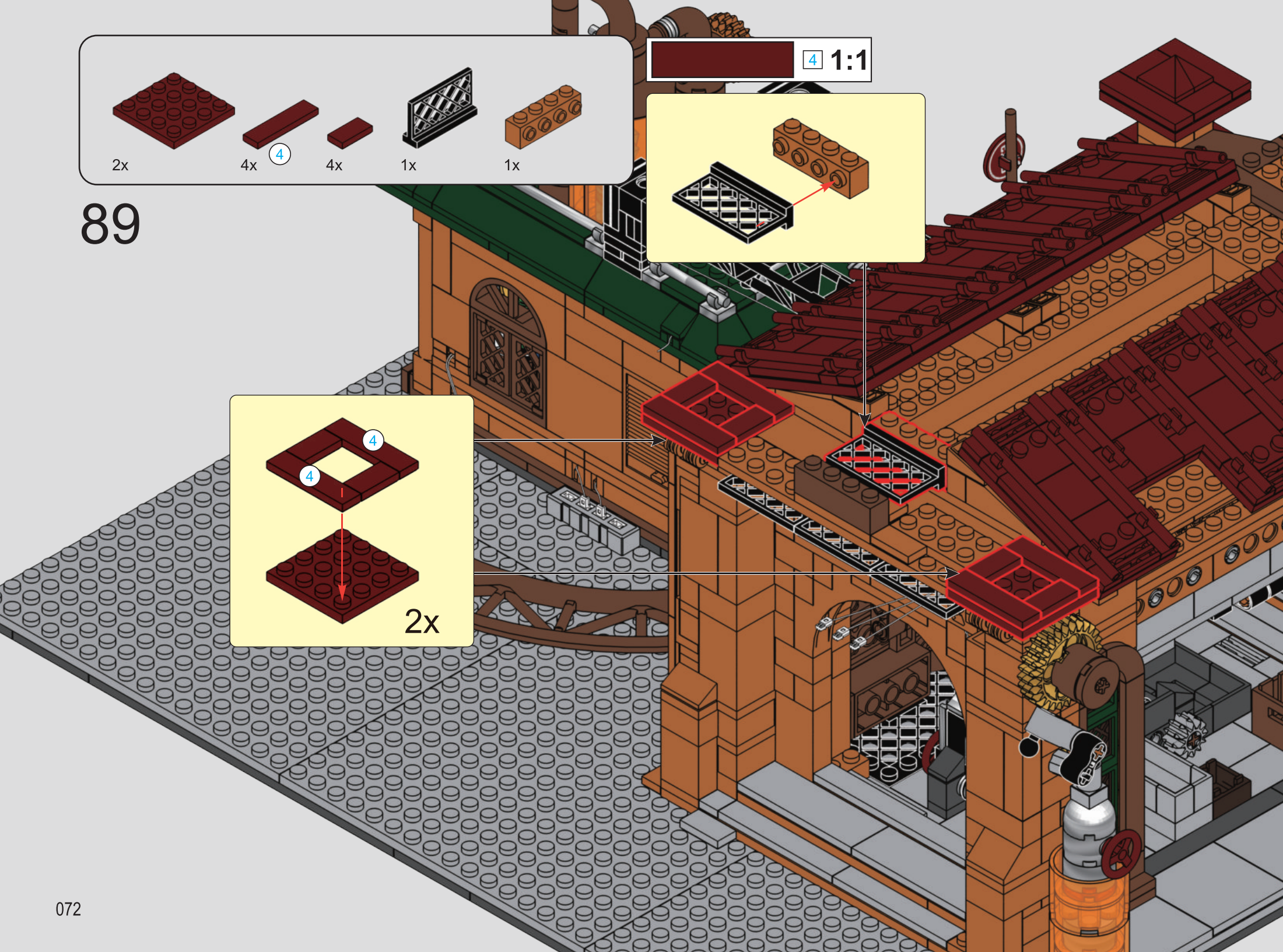

89



90

1

2

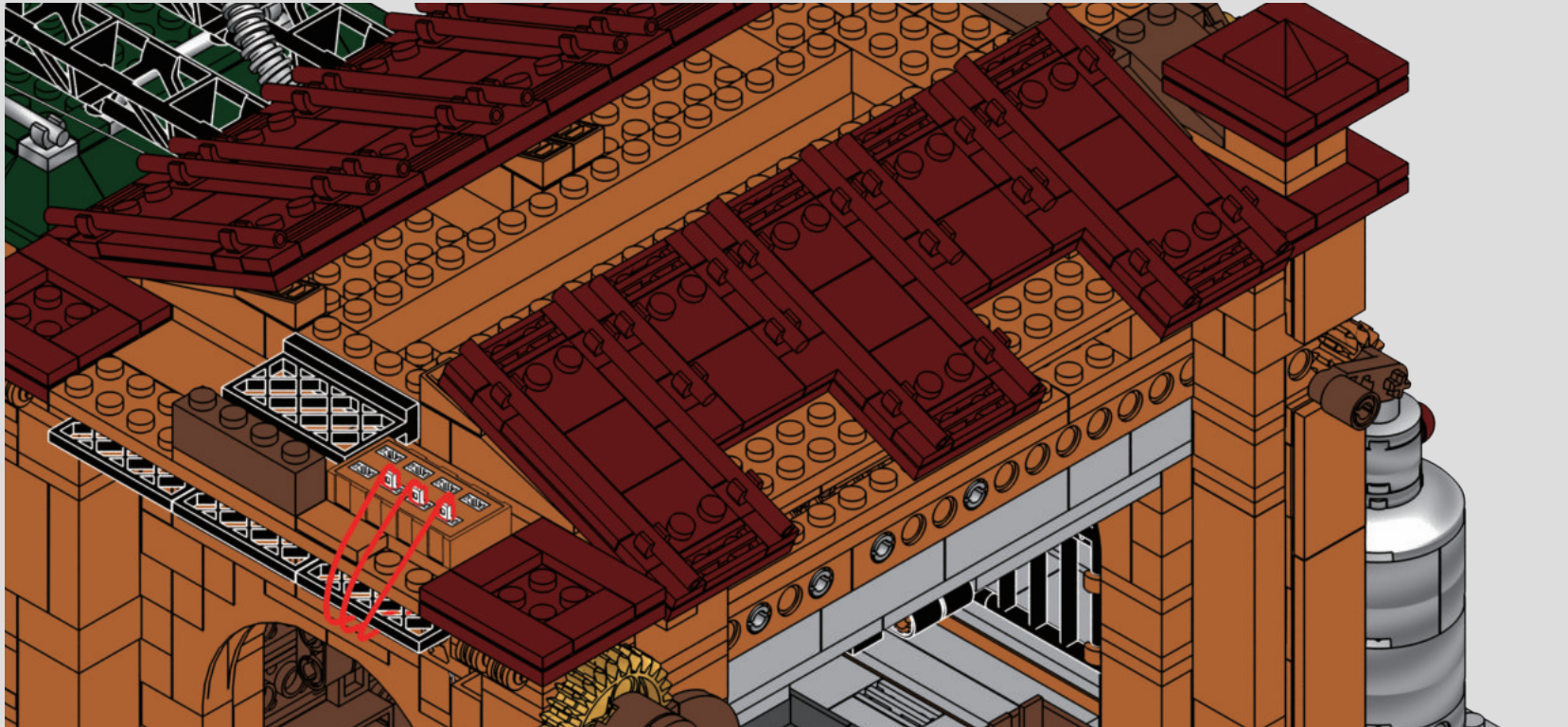

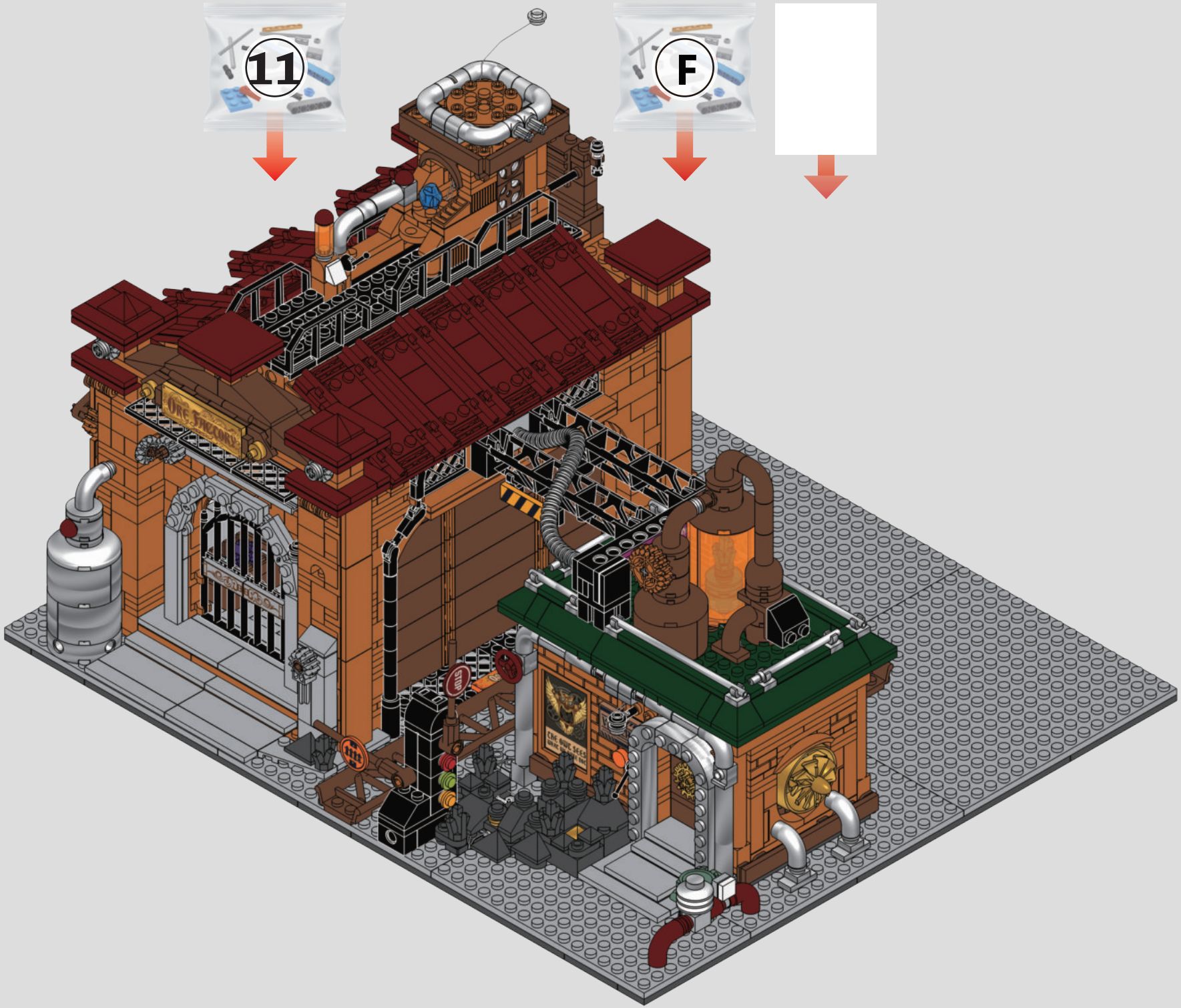
11
F
ORE THEORY
STOP

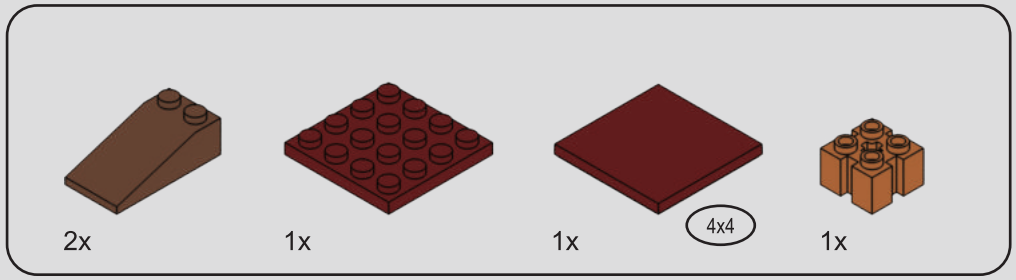

91

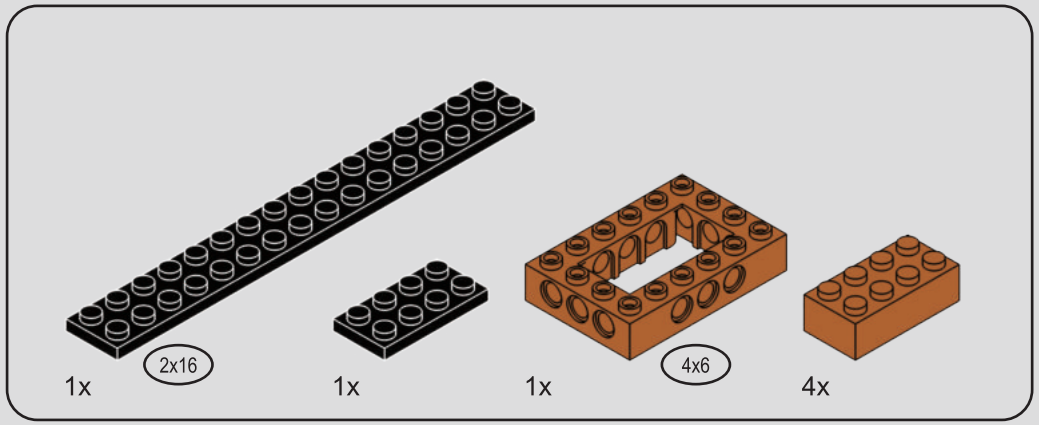

92

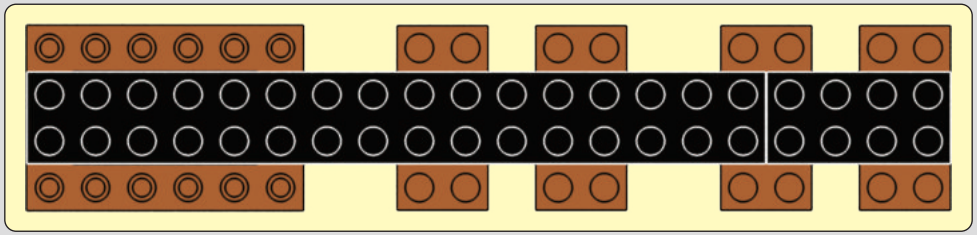

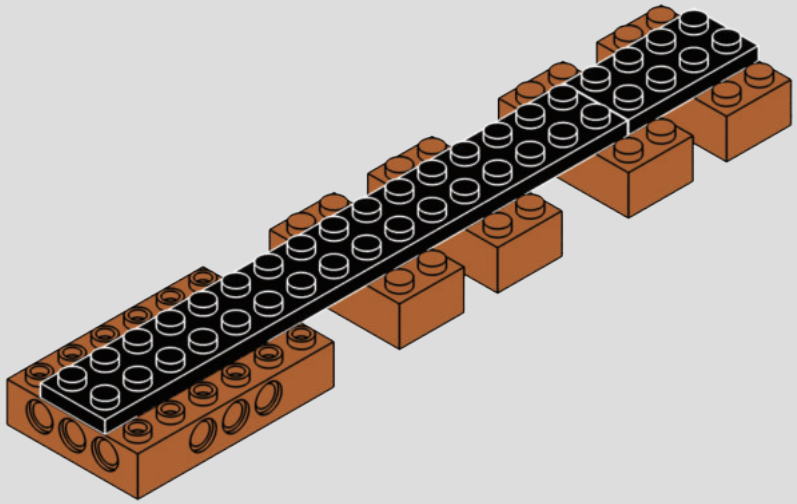

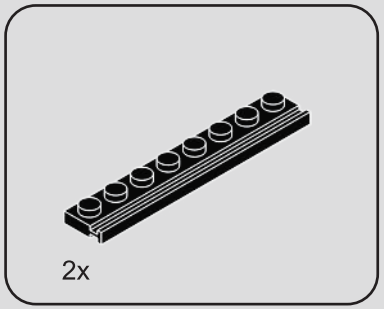

93

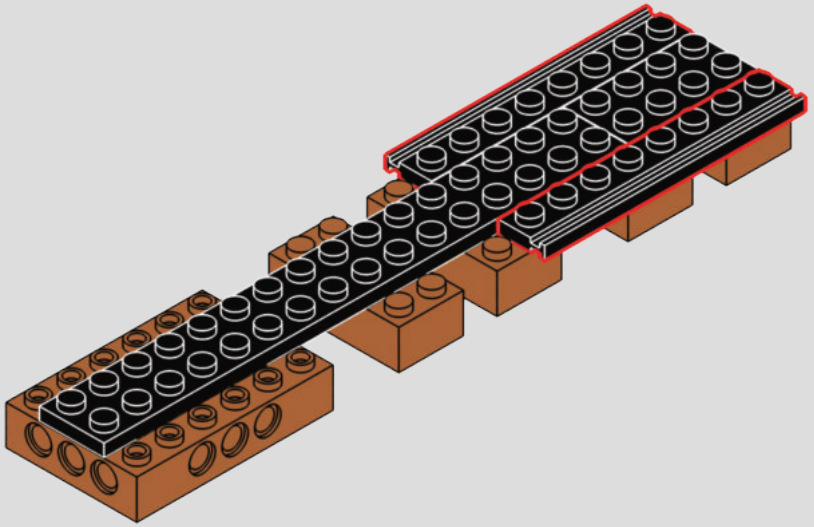

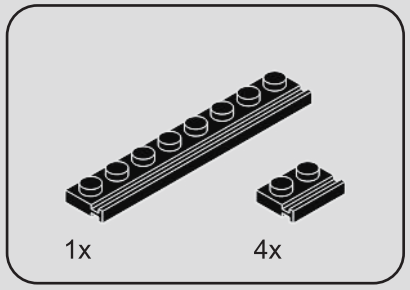

94

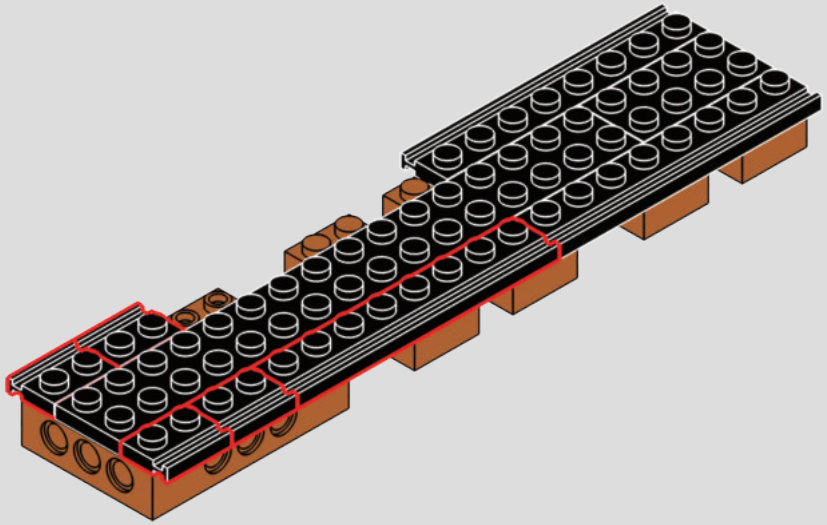

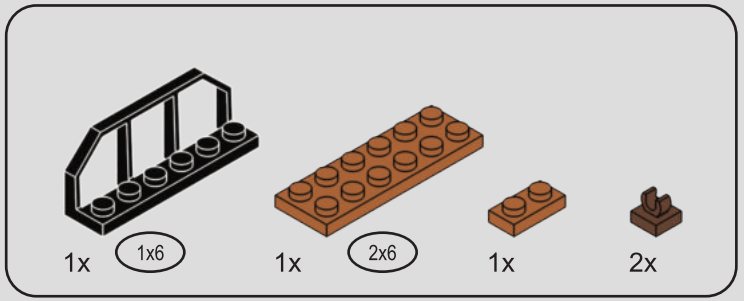

95

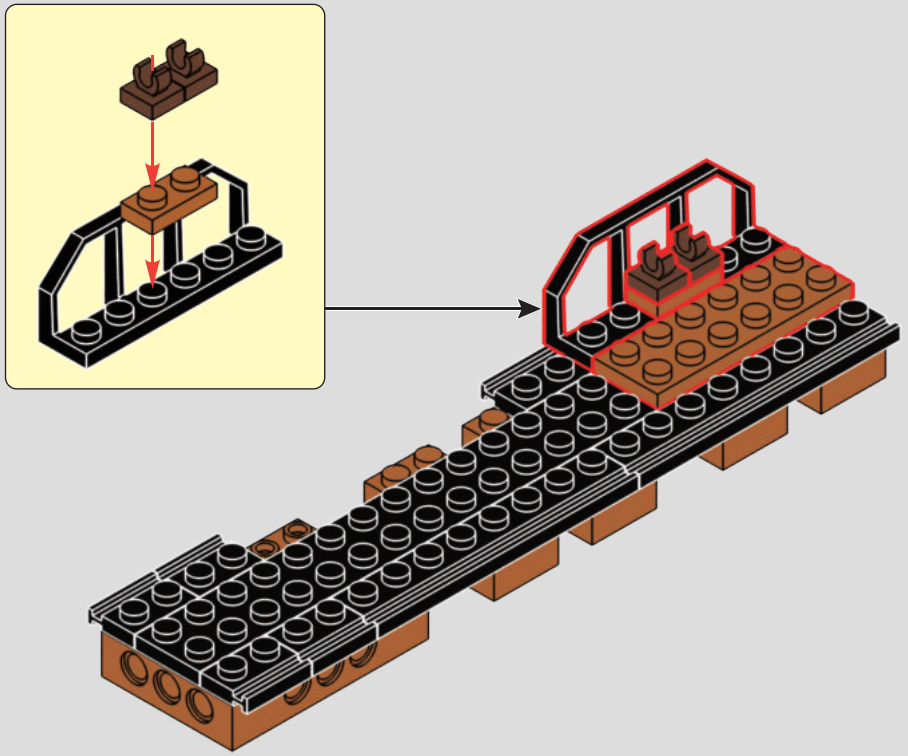

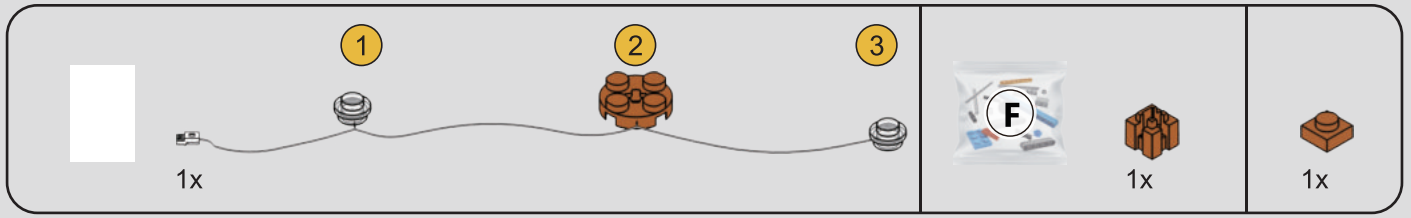

96

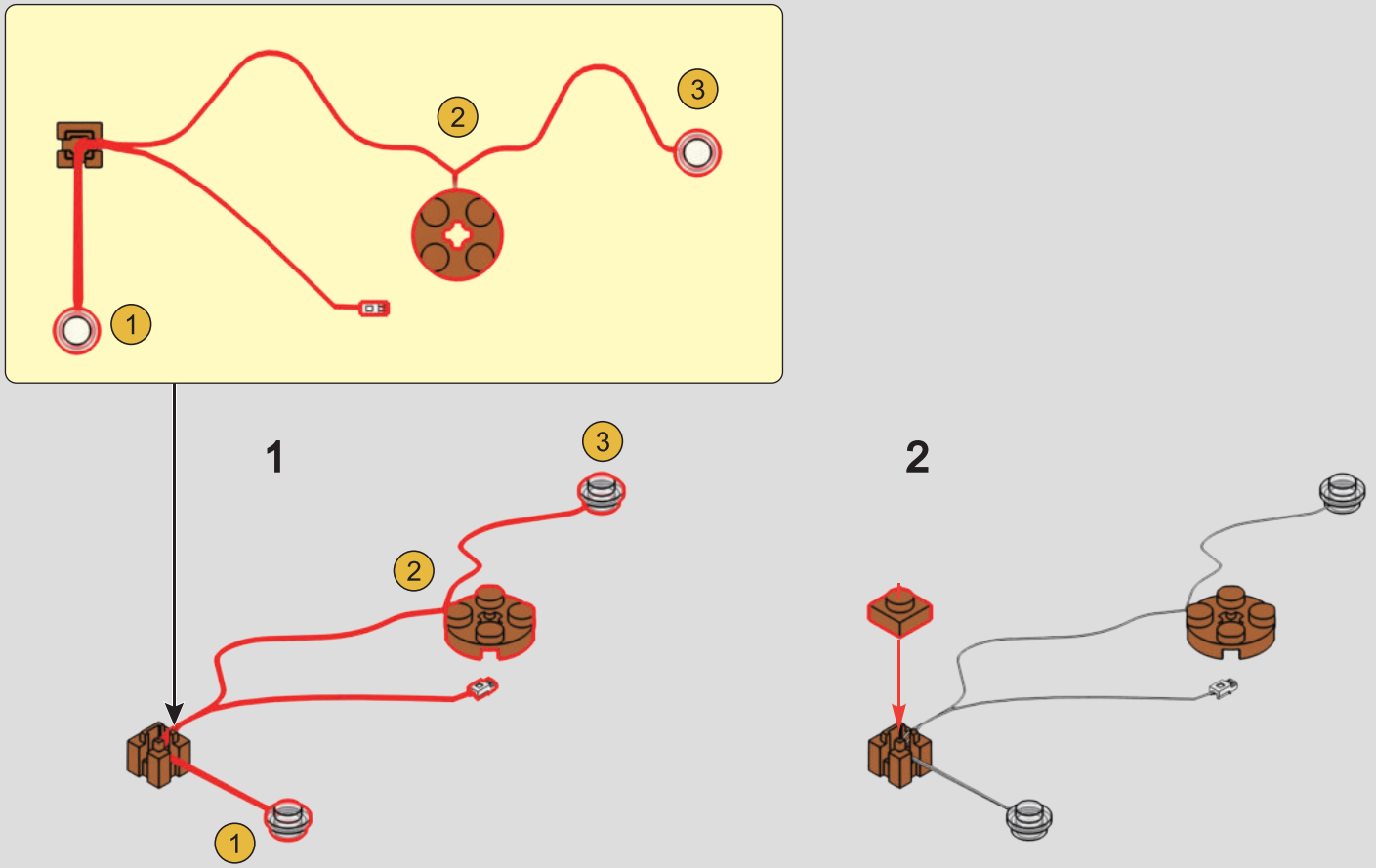

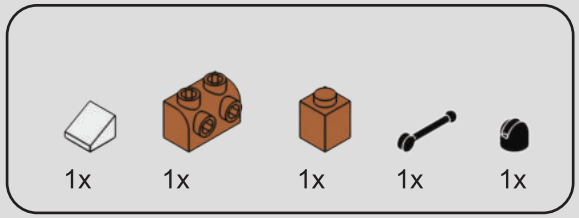

97

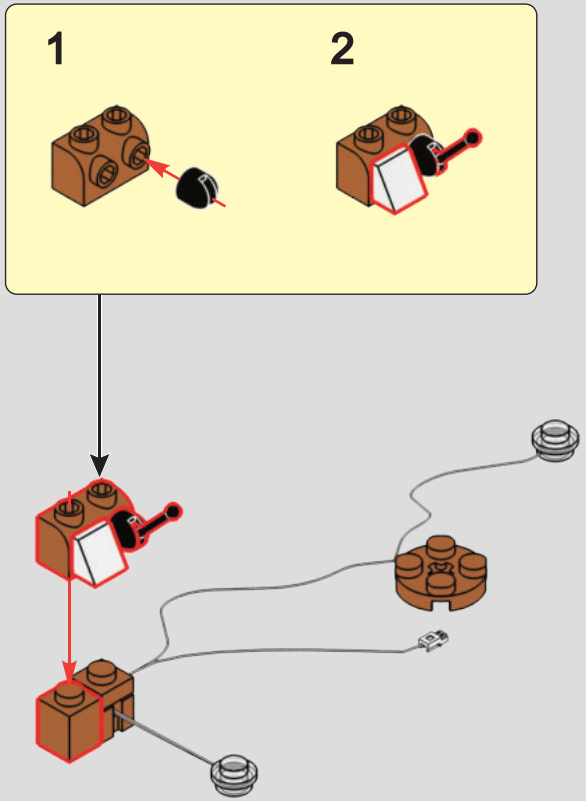

98

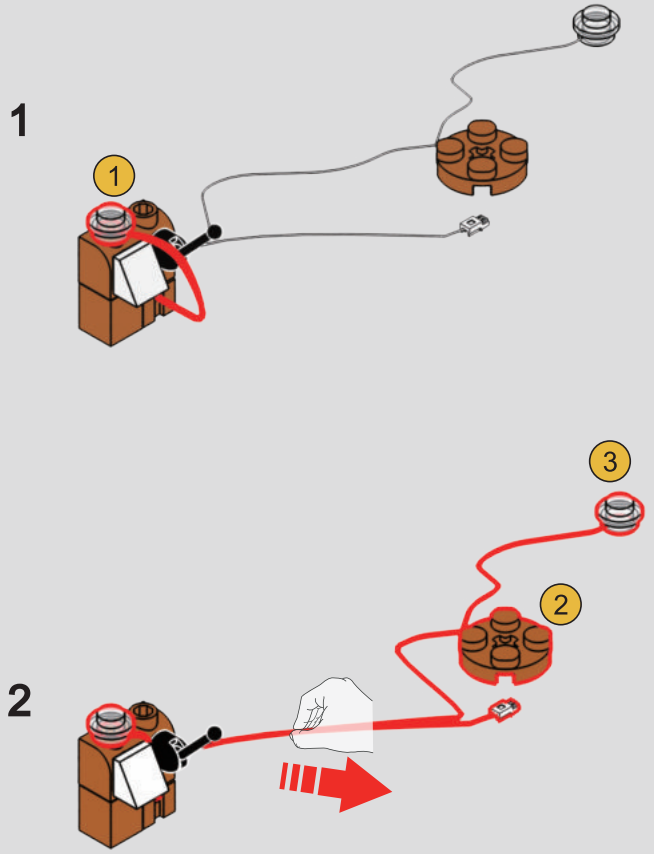

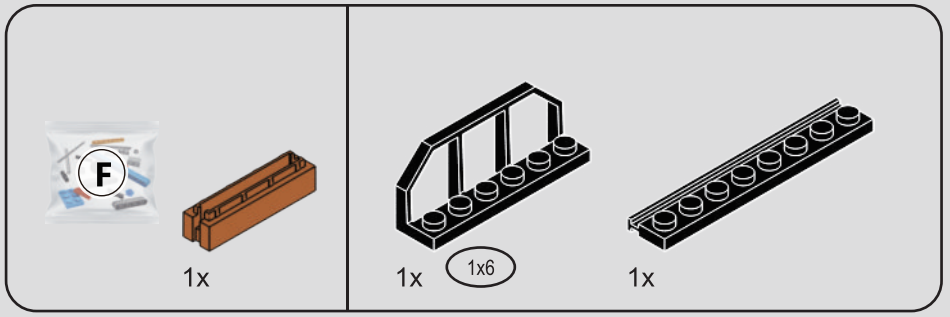

99

1

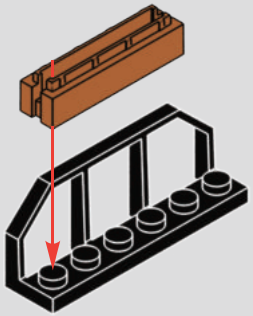

2

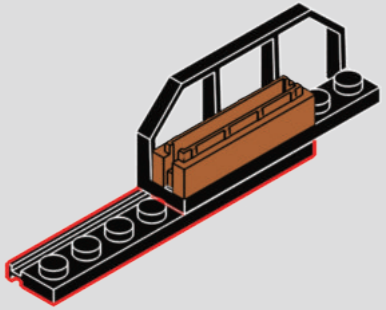

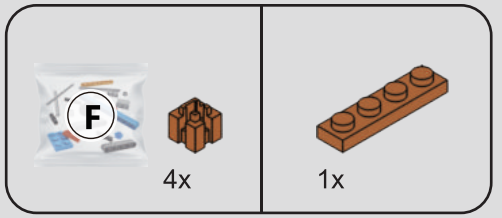

100

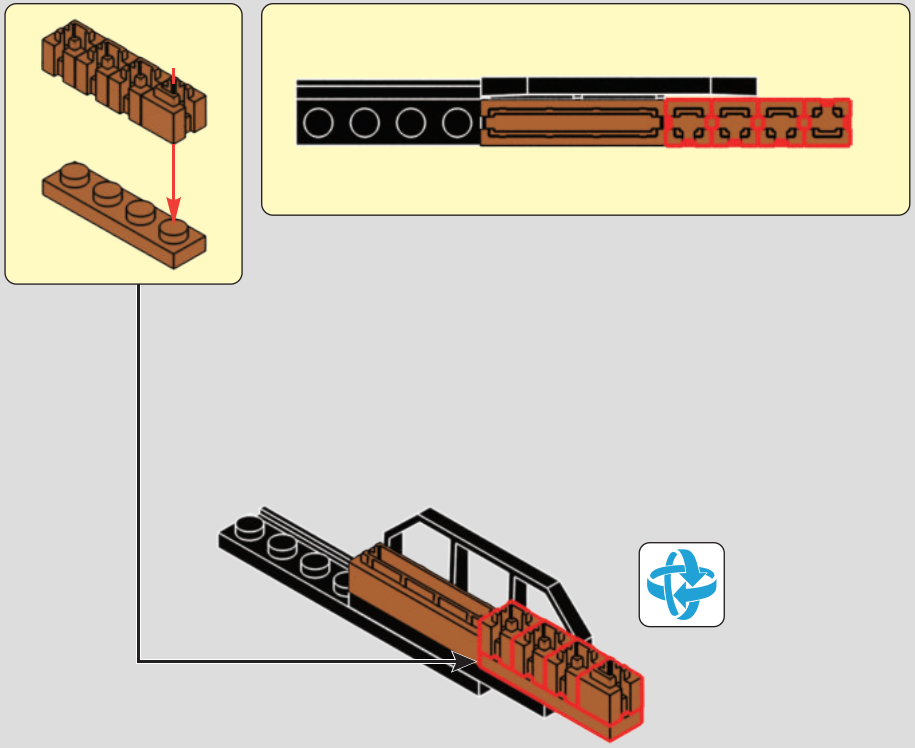

101

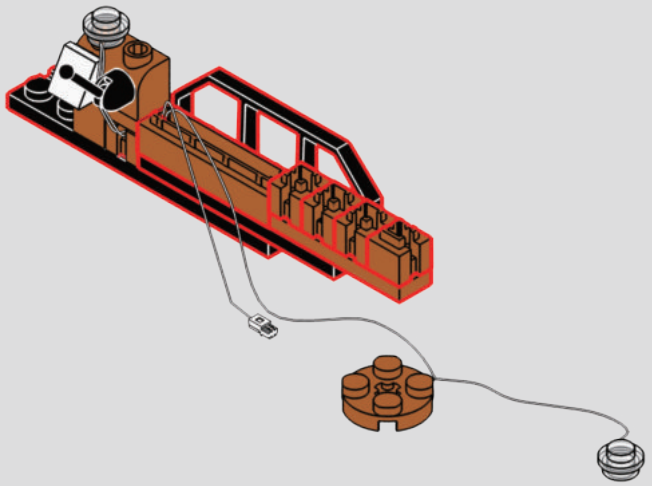

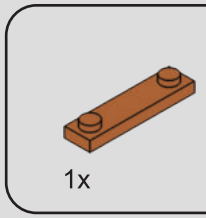

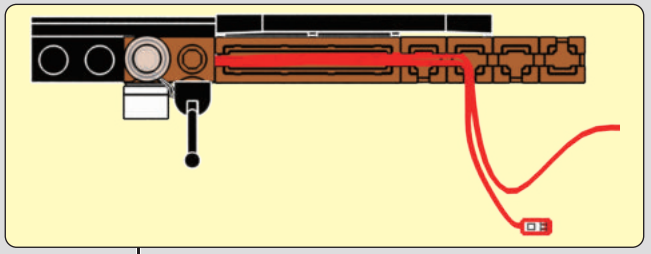

102

1

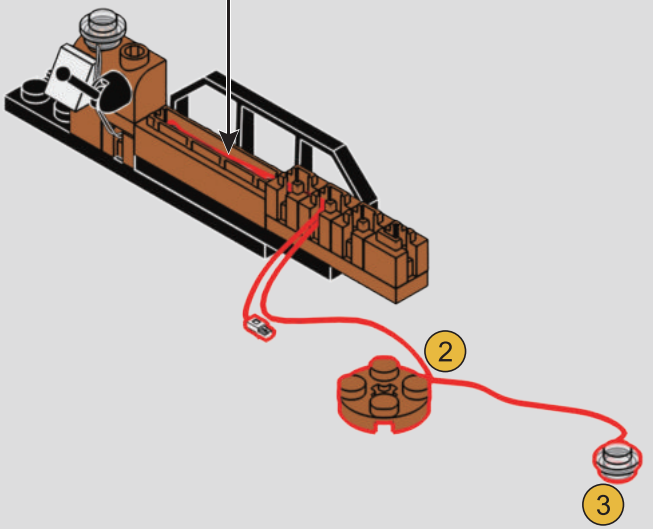

2

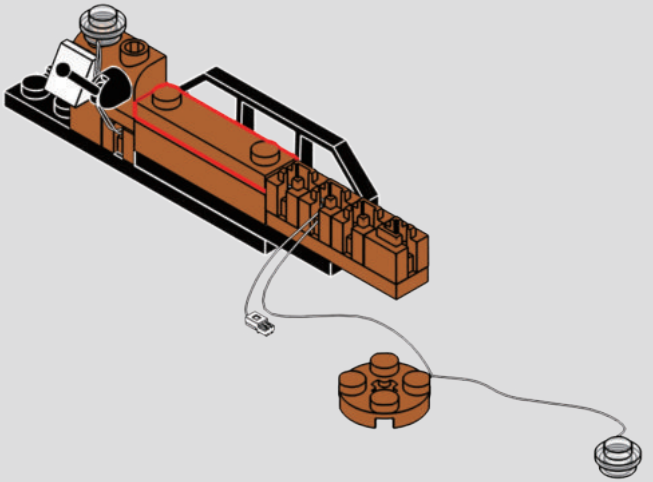

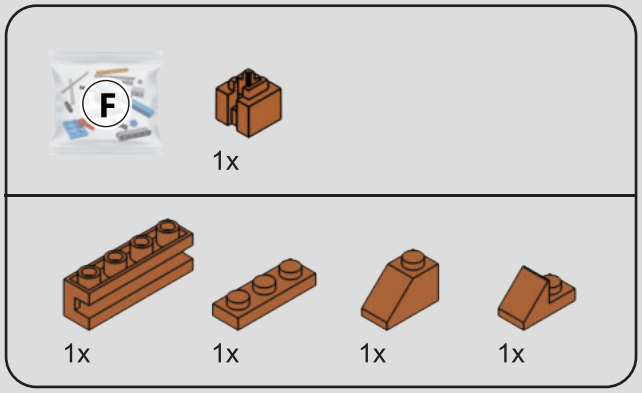

103

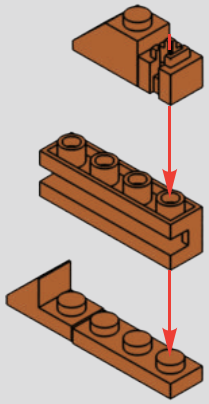

104

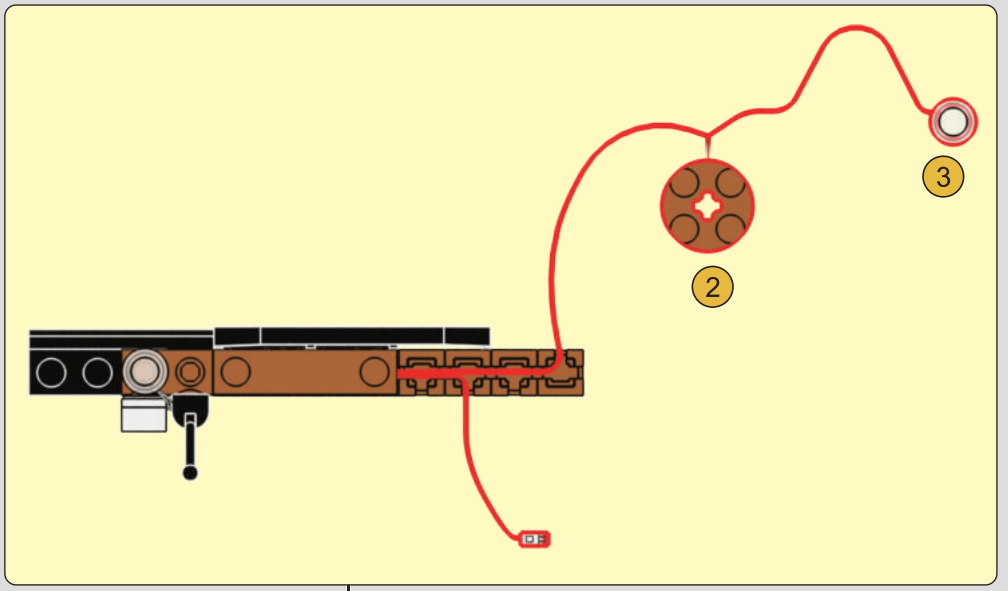

1

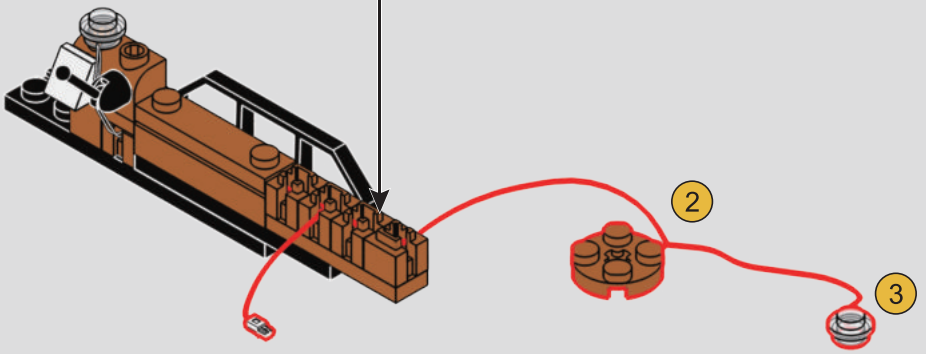

2

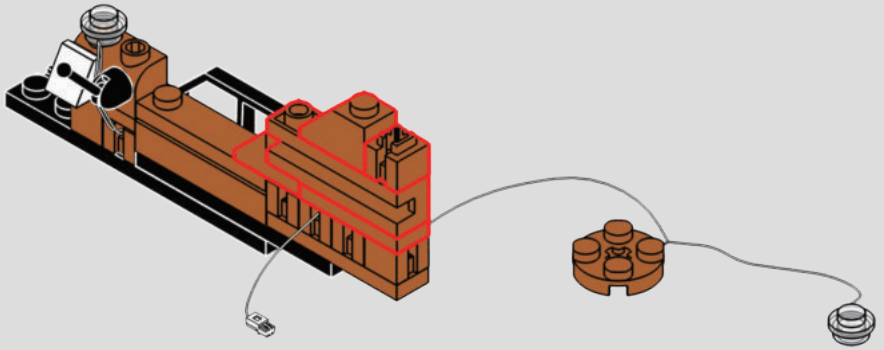

1x

105

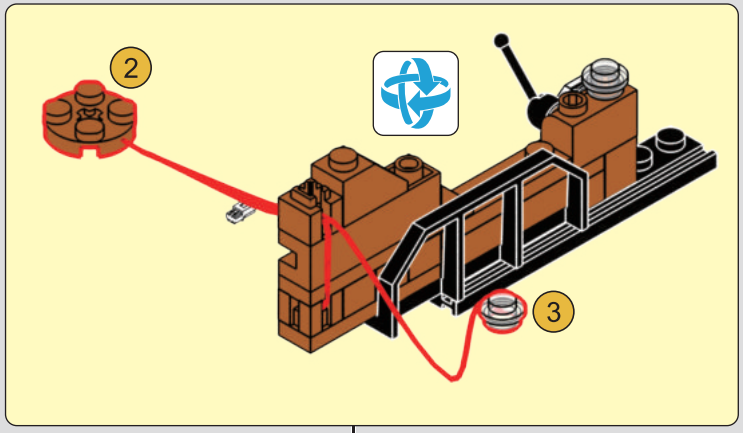

1

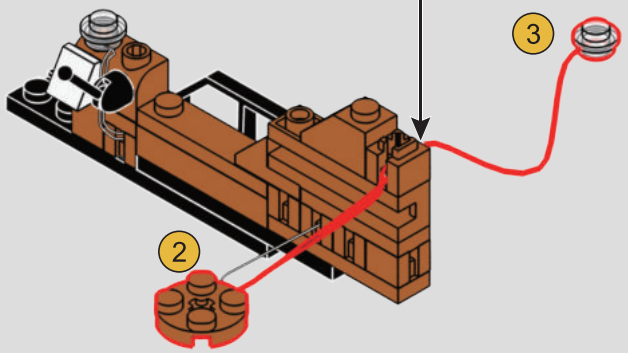

2

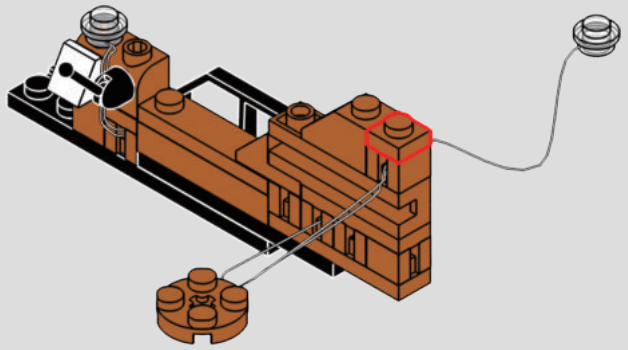

106

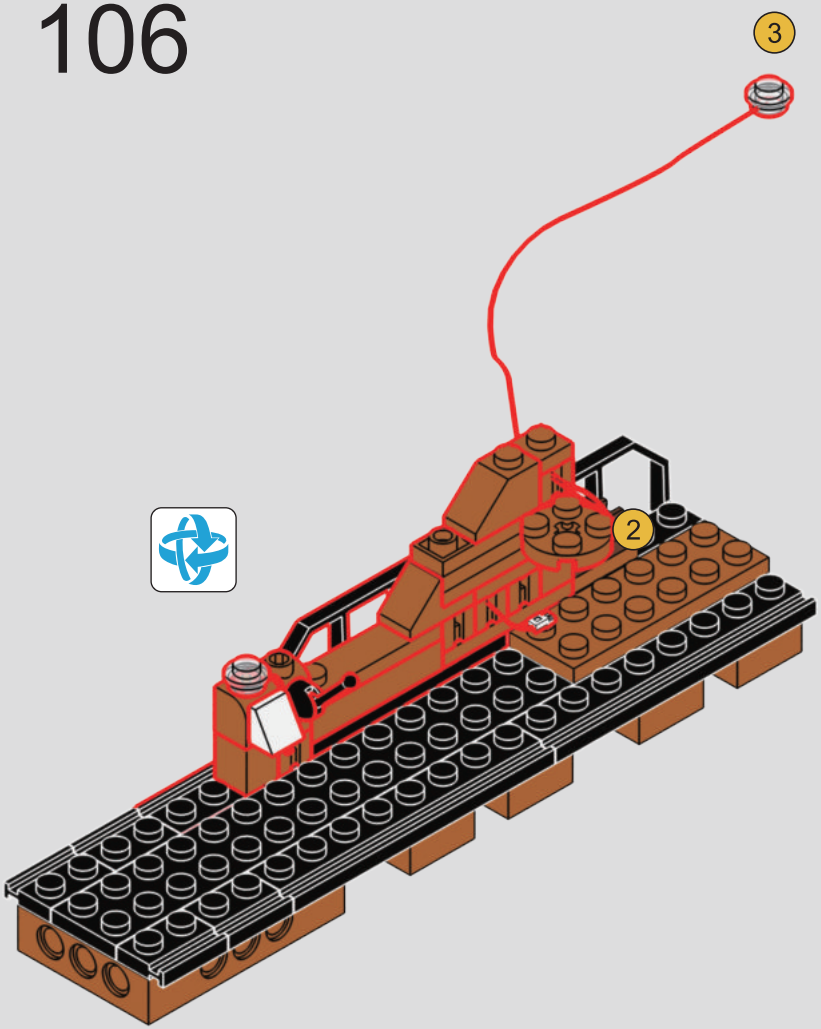

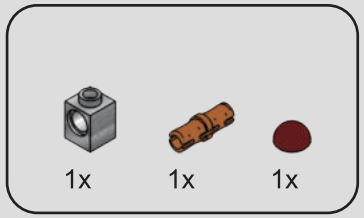

107

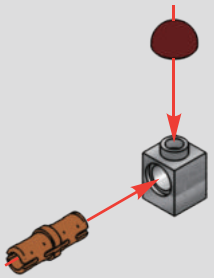

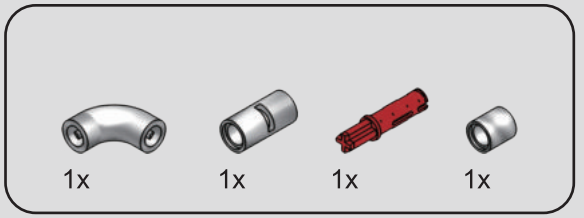

108

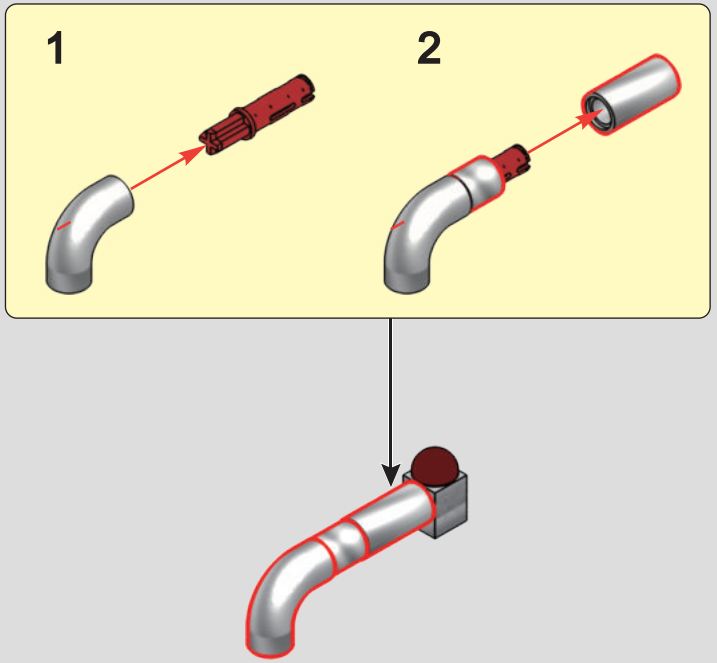

109

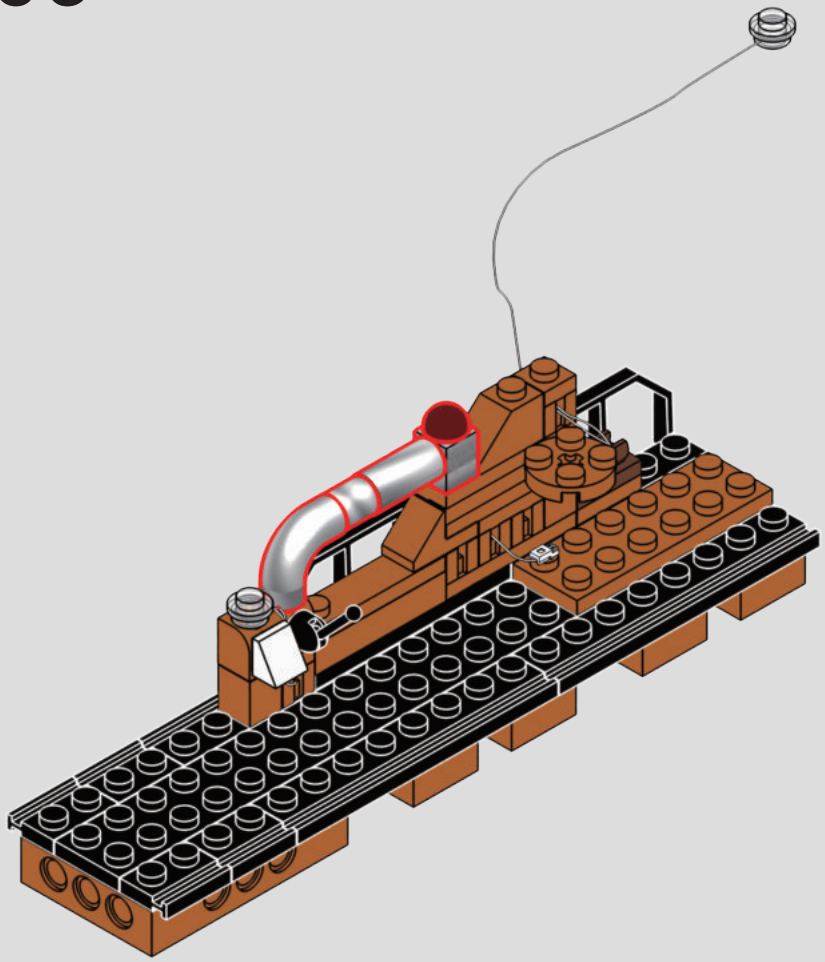

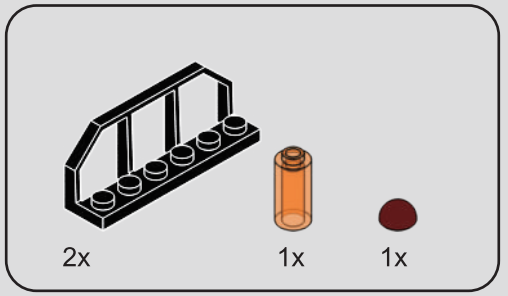

110

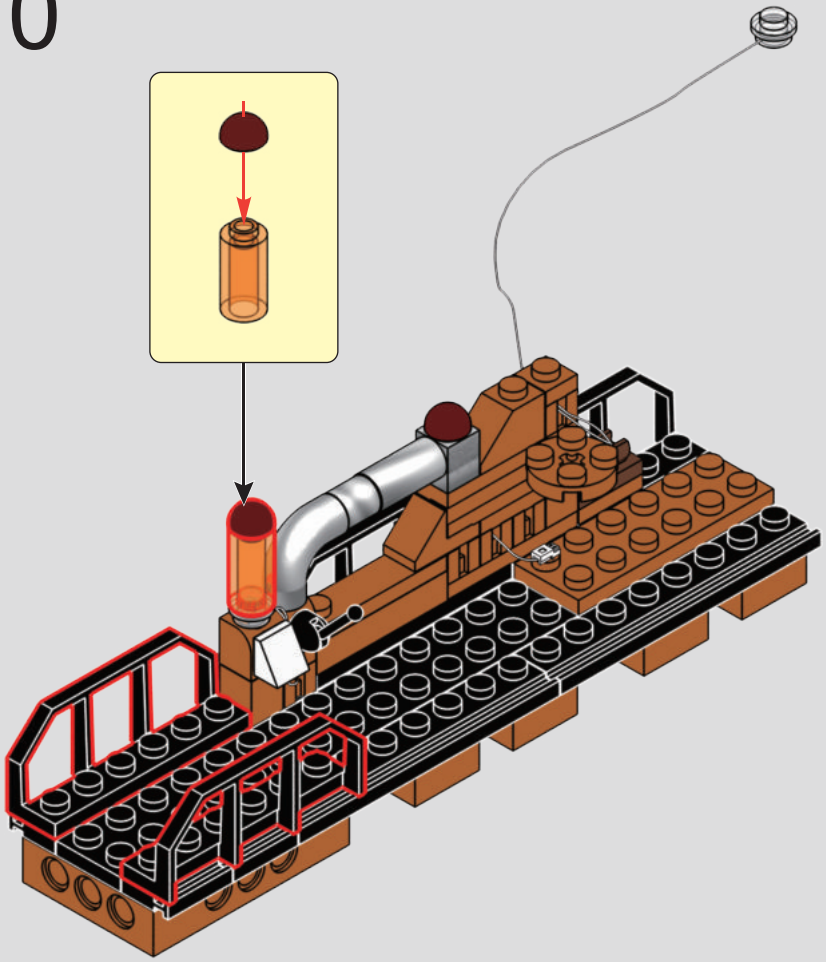

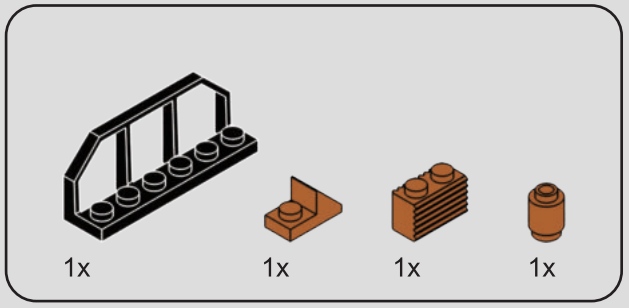

111

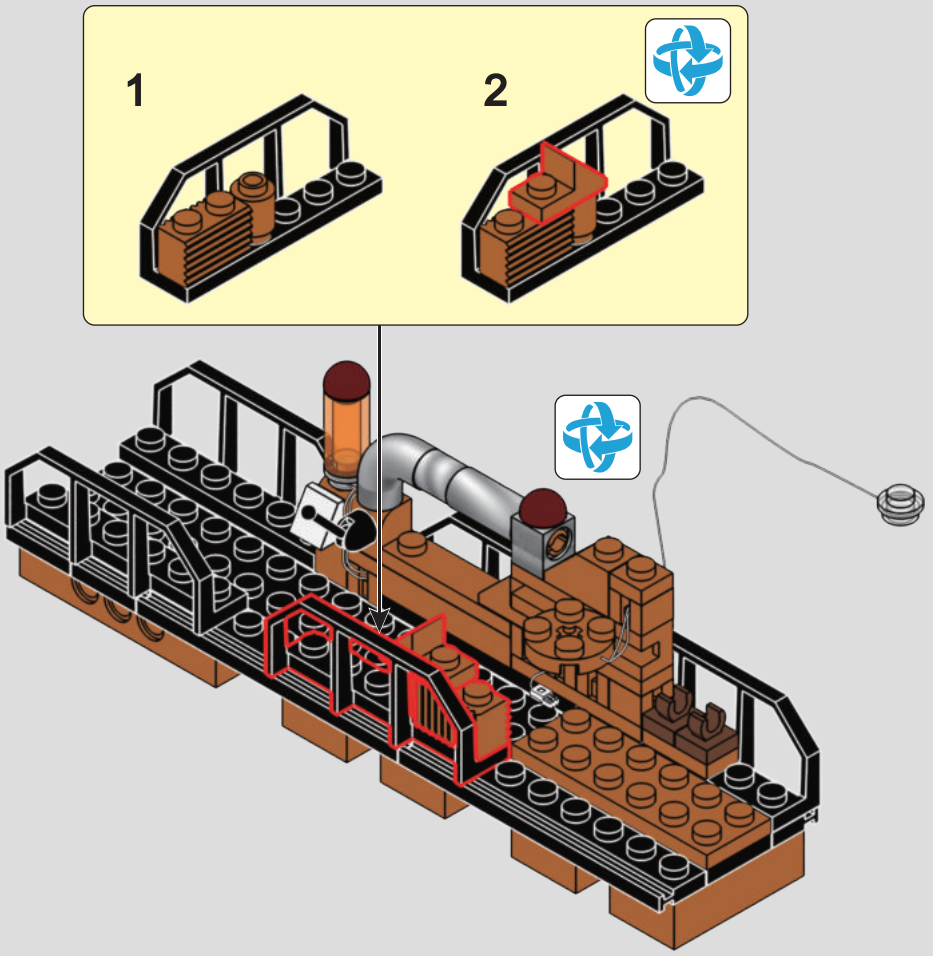

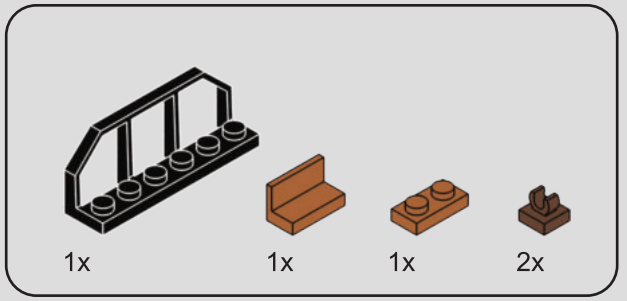

112

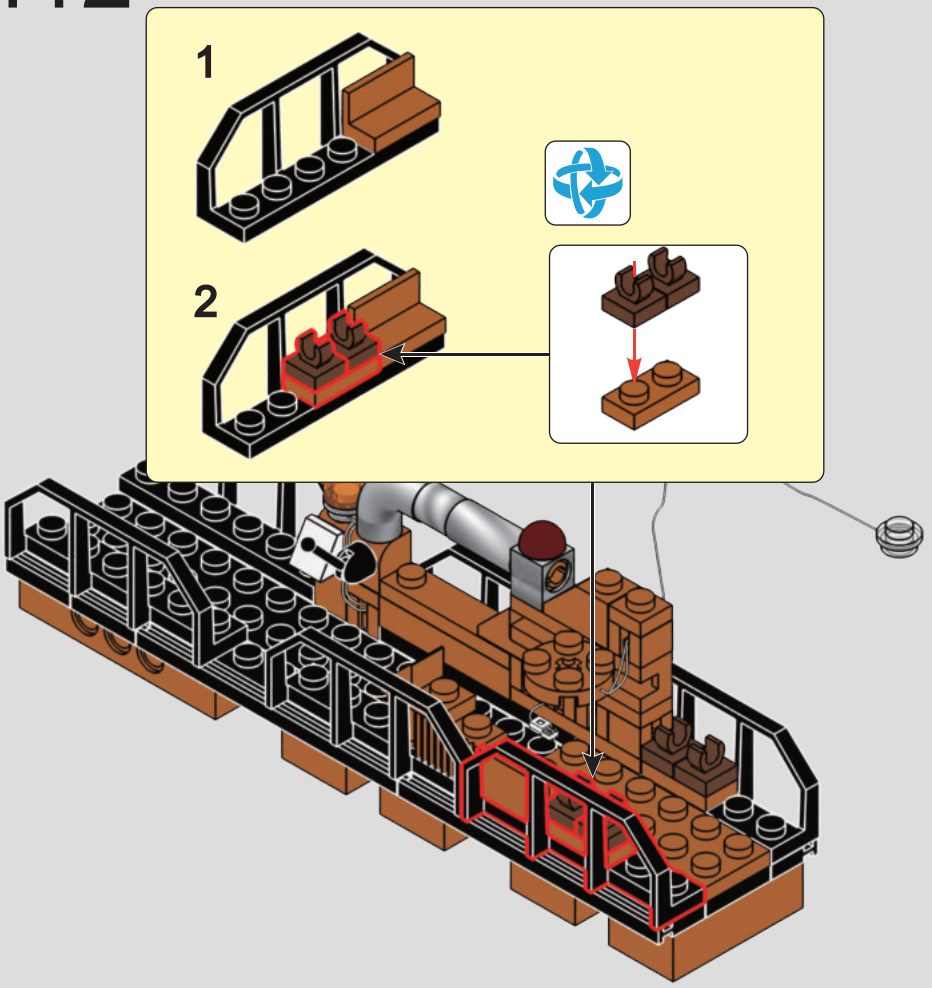

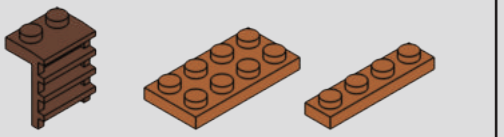

113

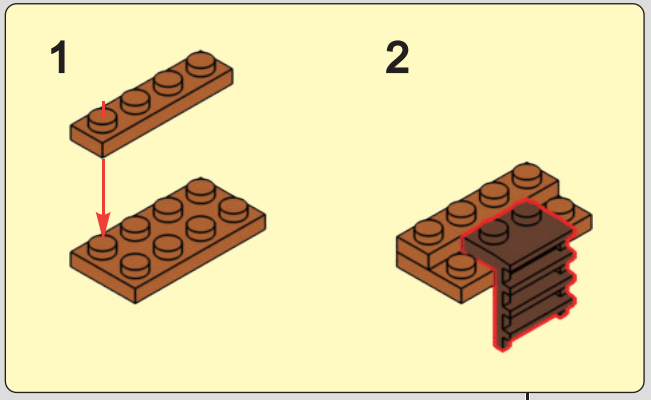

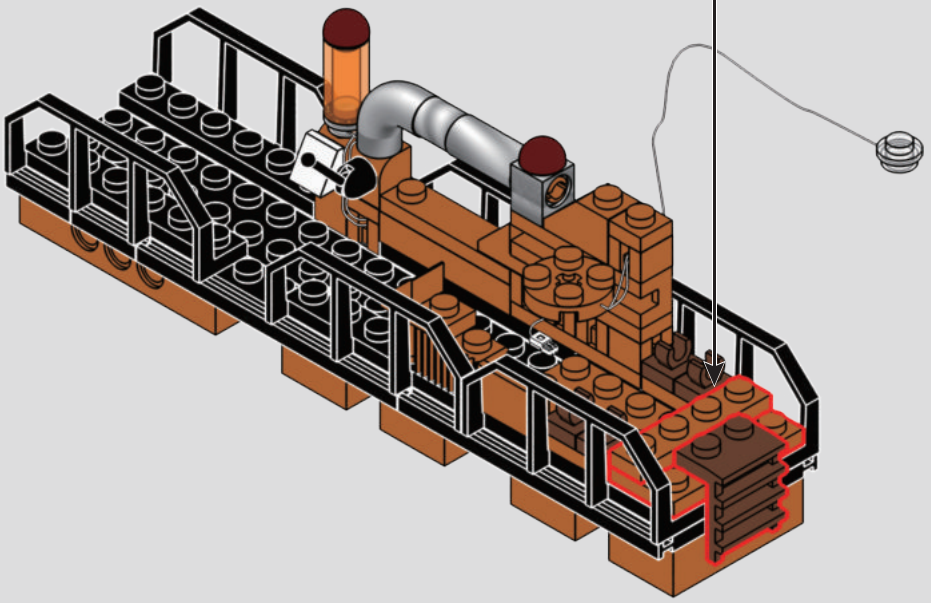

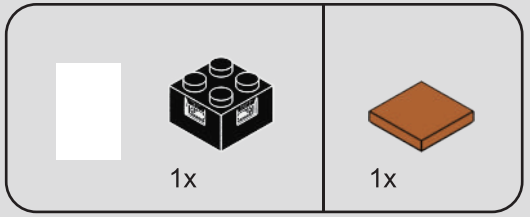

114

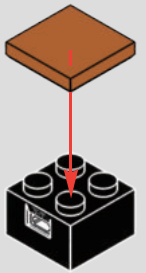

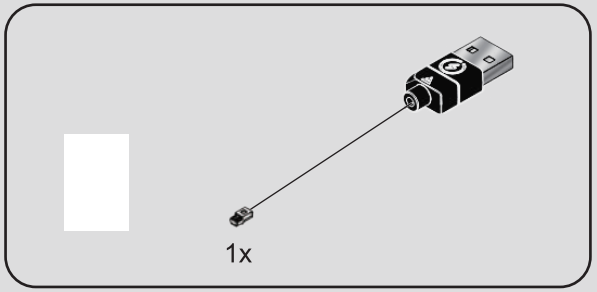

115

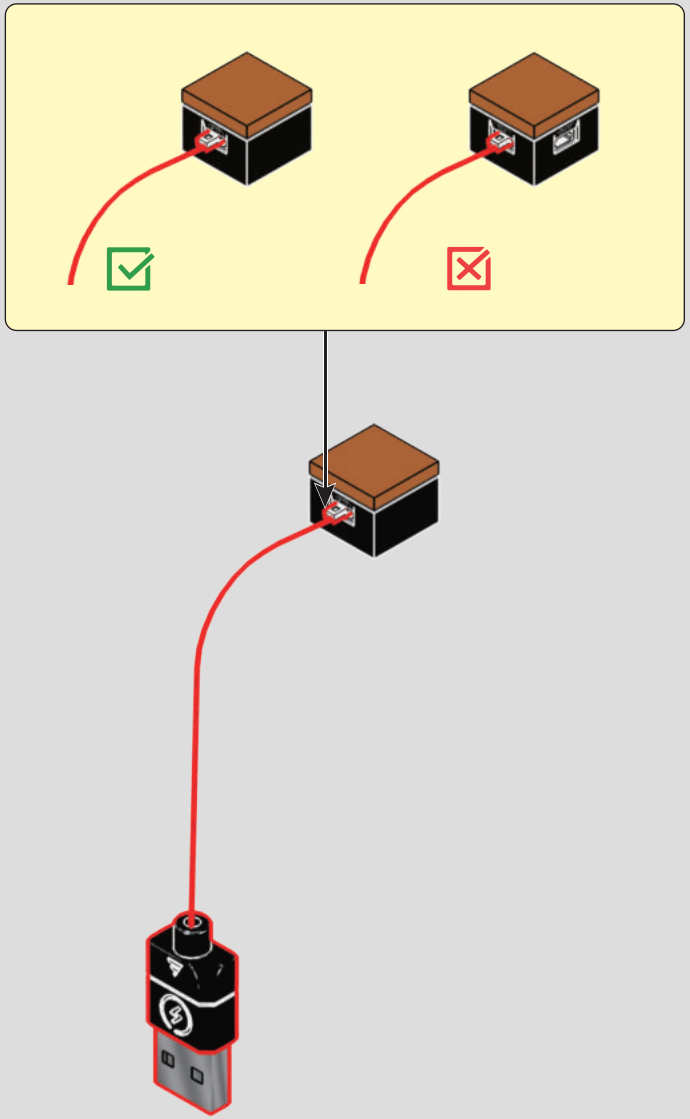

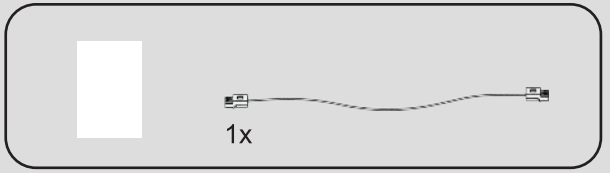

116

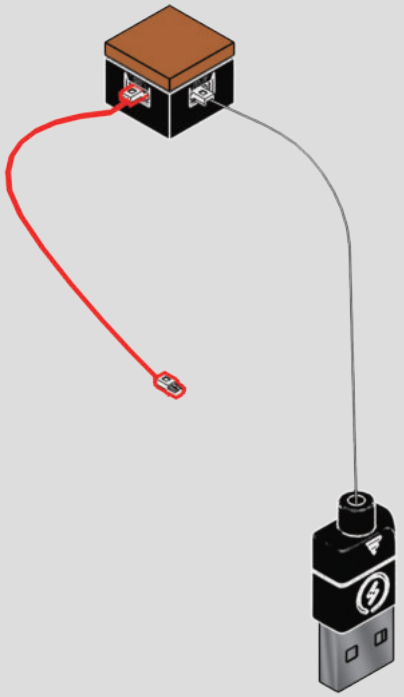

1

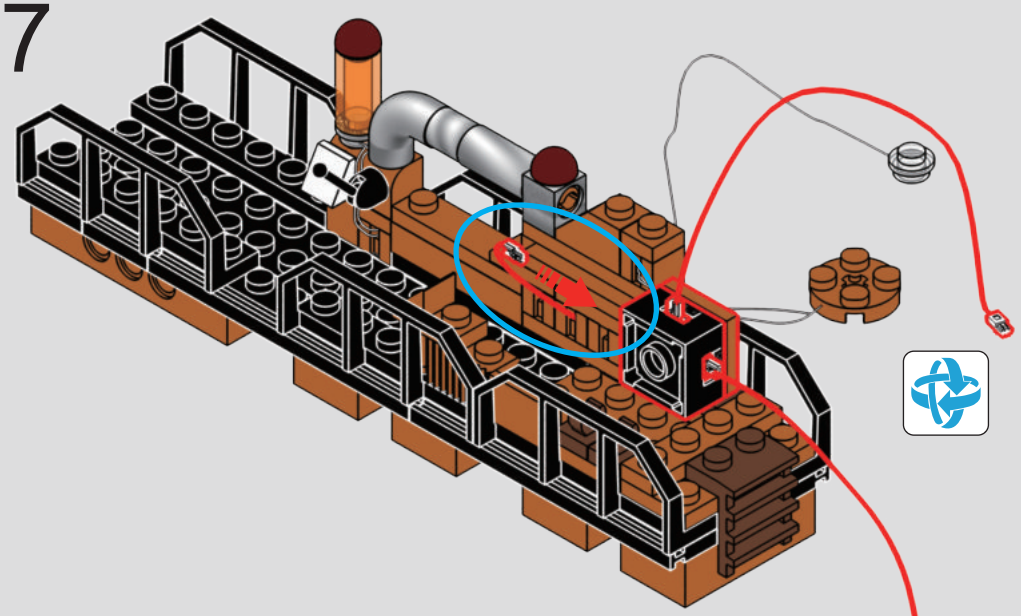

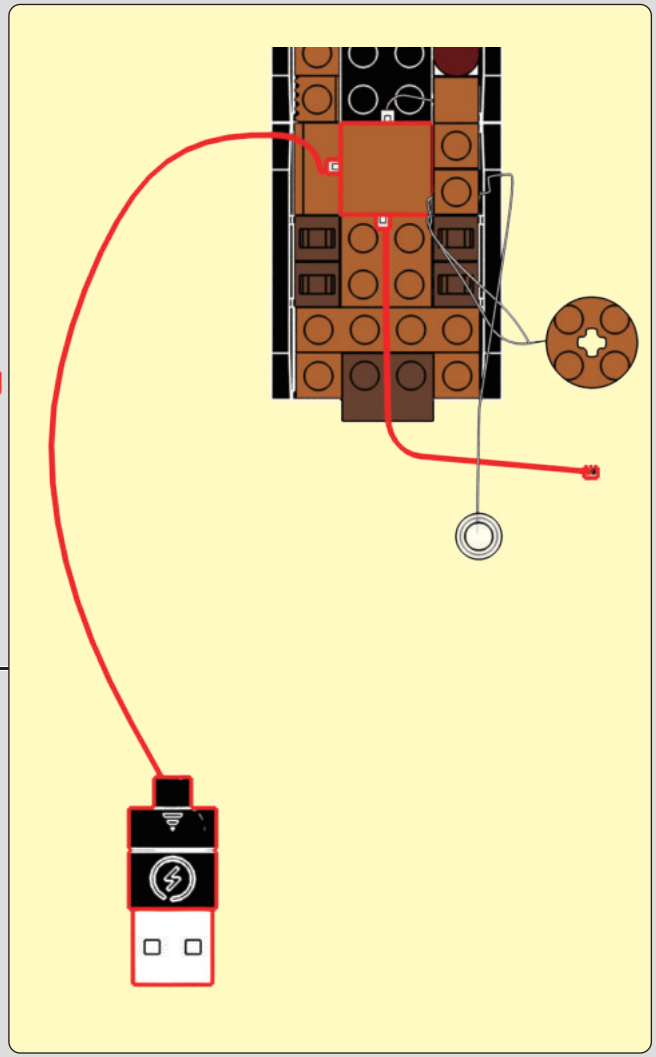

2

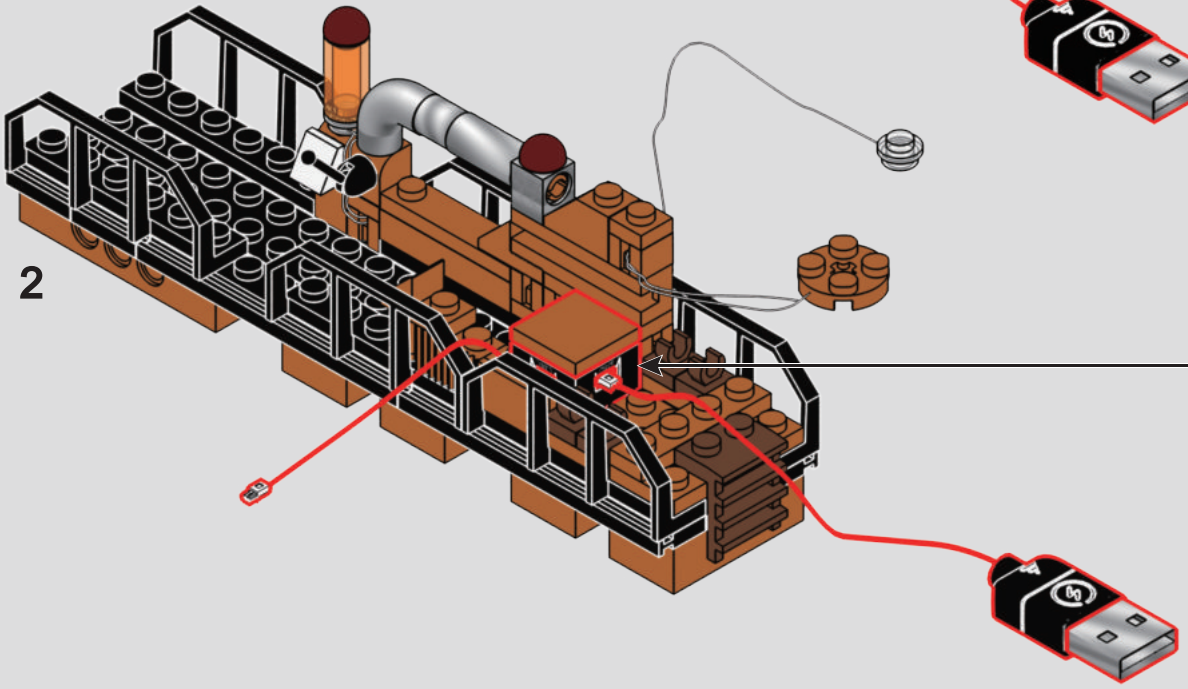

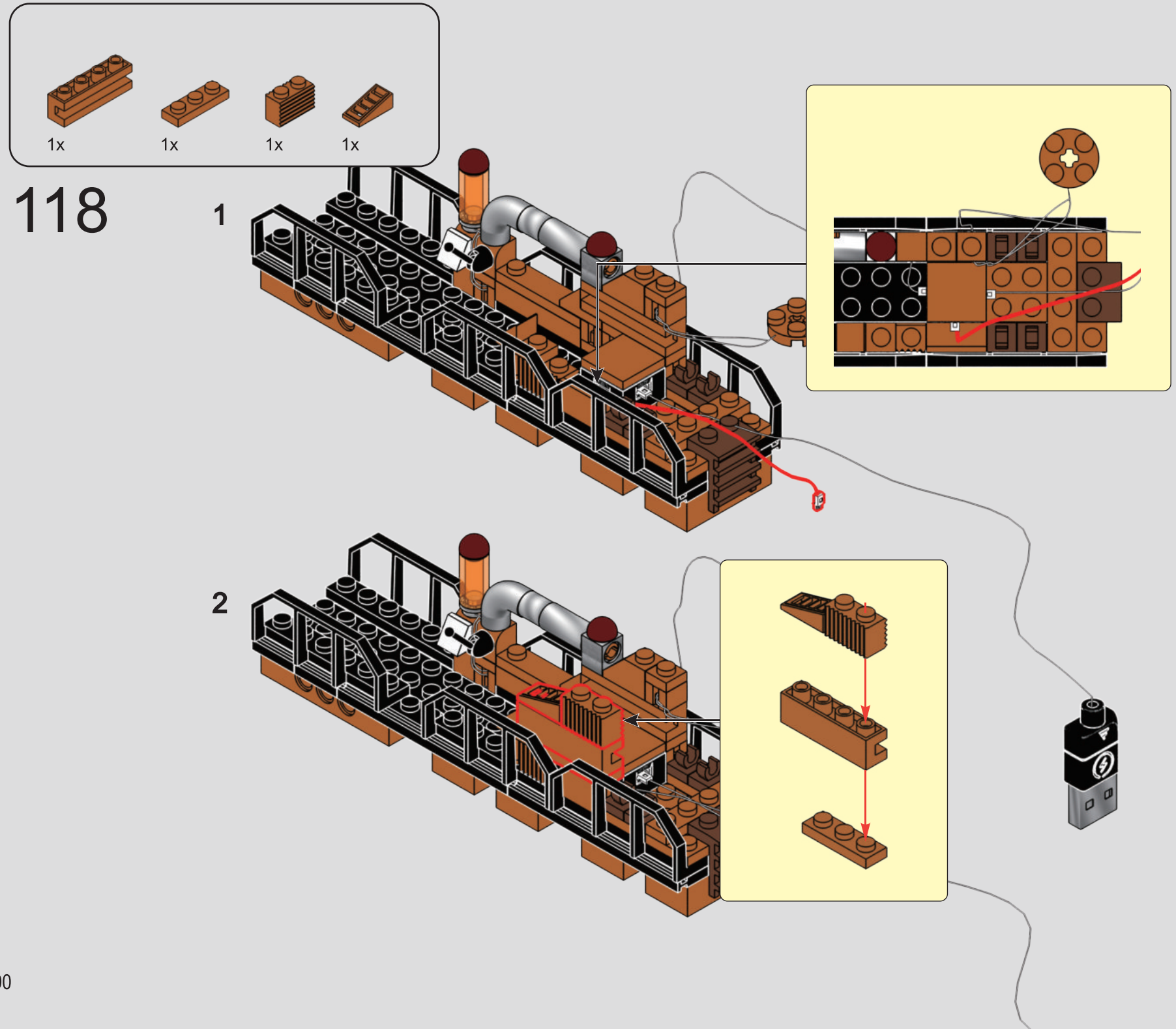
1x
1x
1x
1x
118
1
2

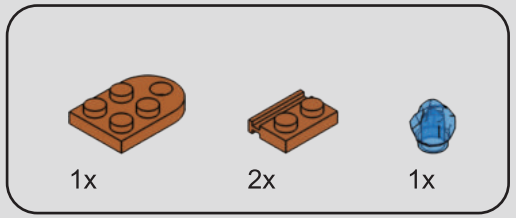

119

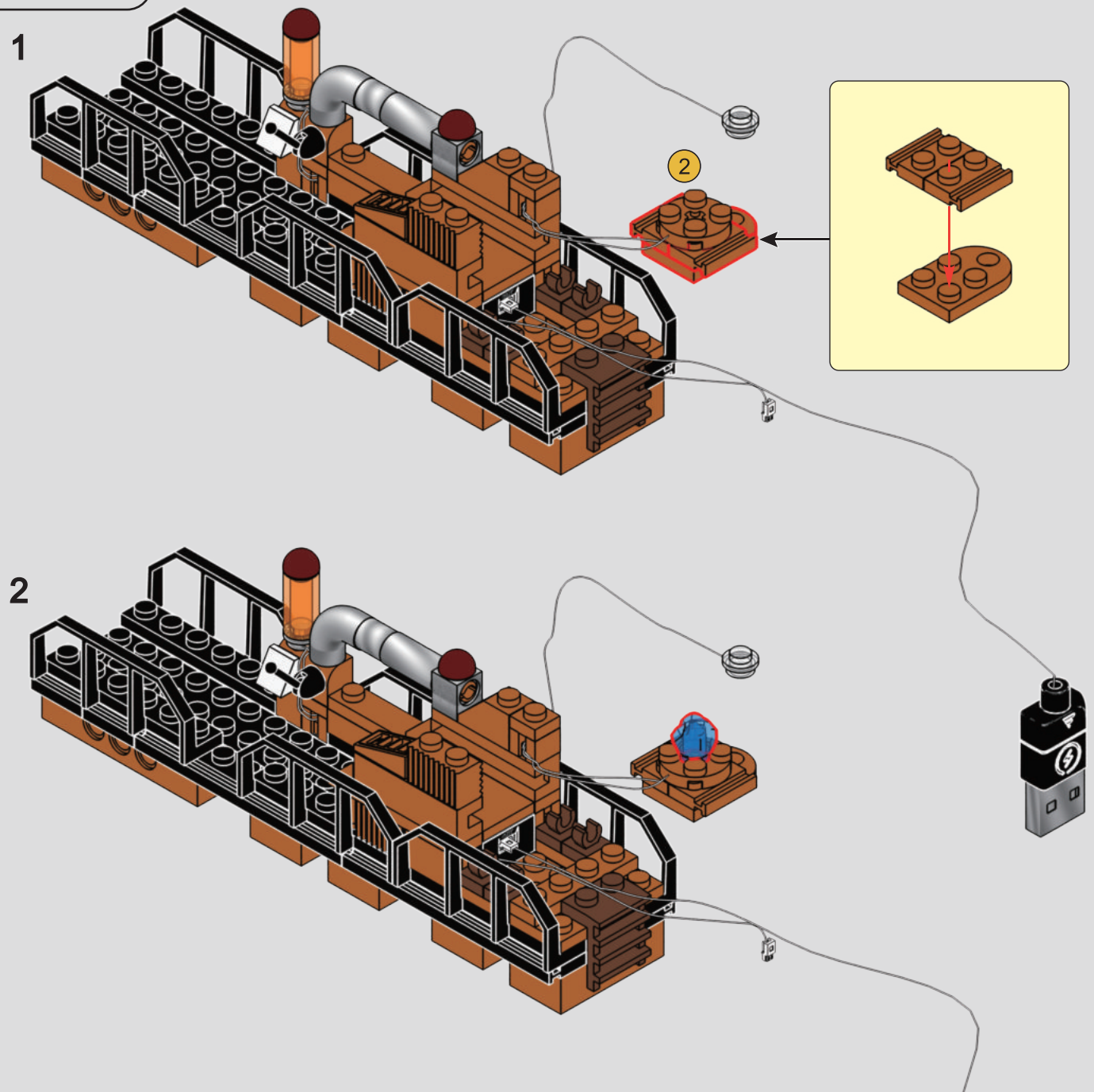

120

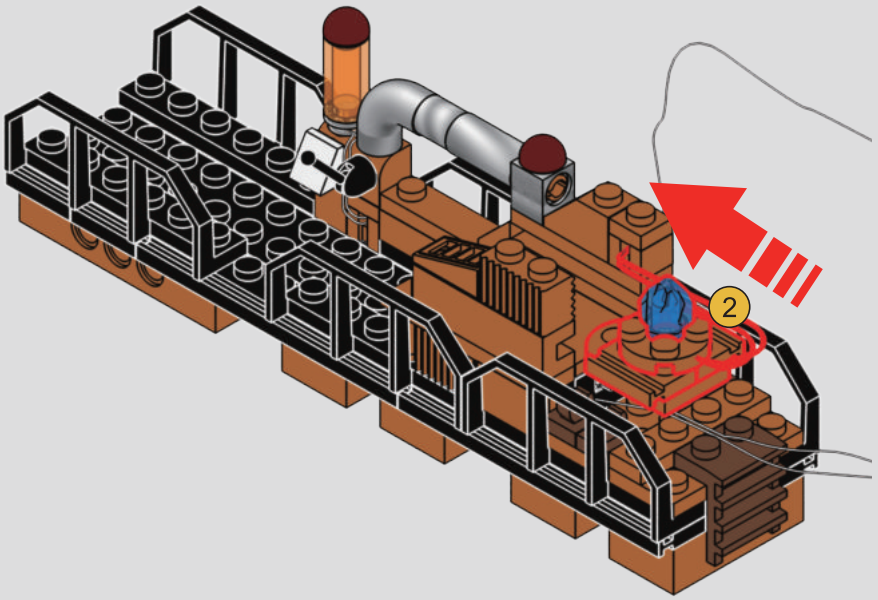

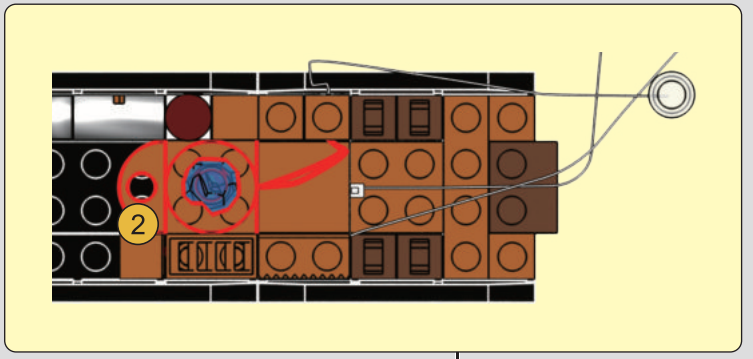

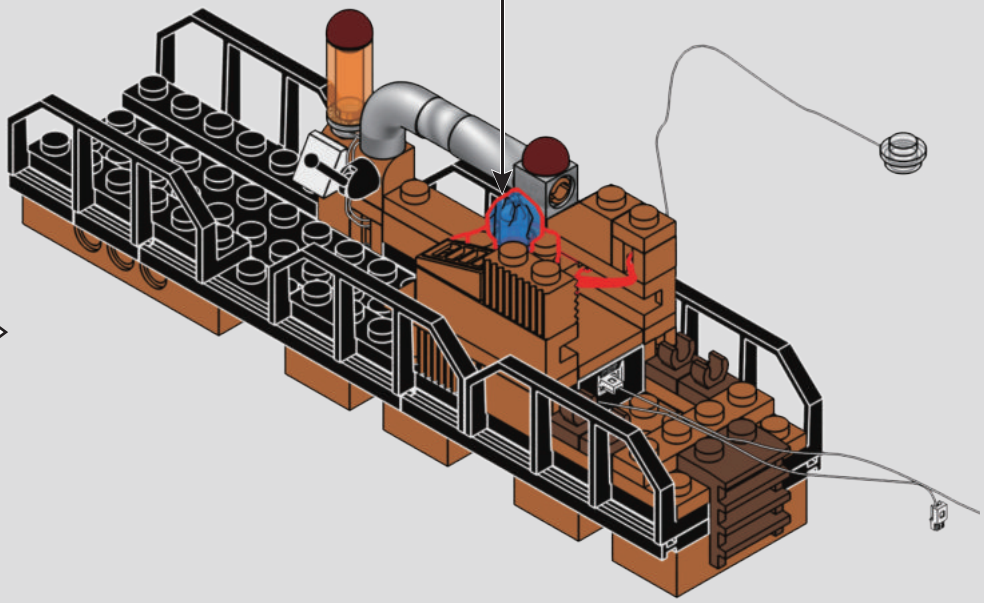

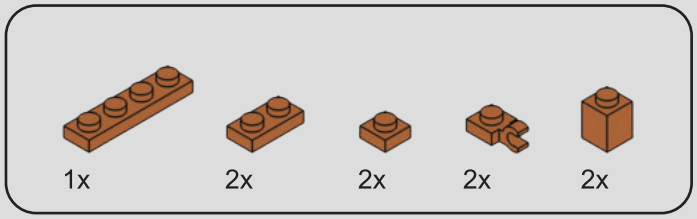

121

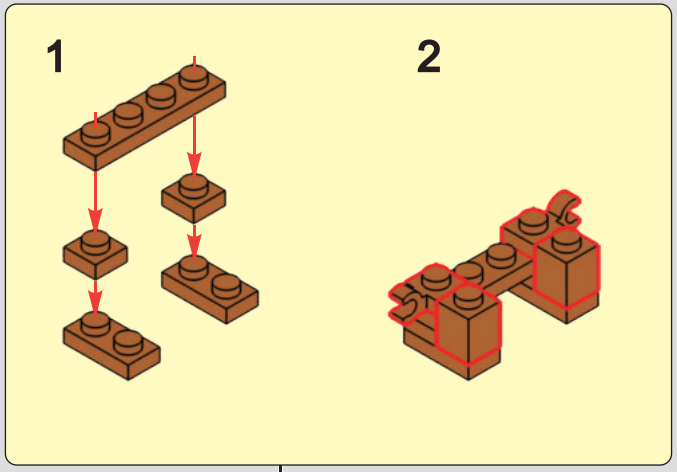

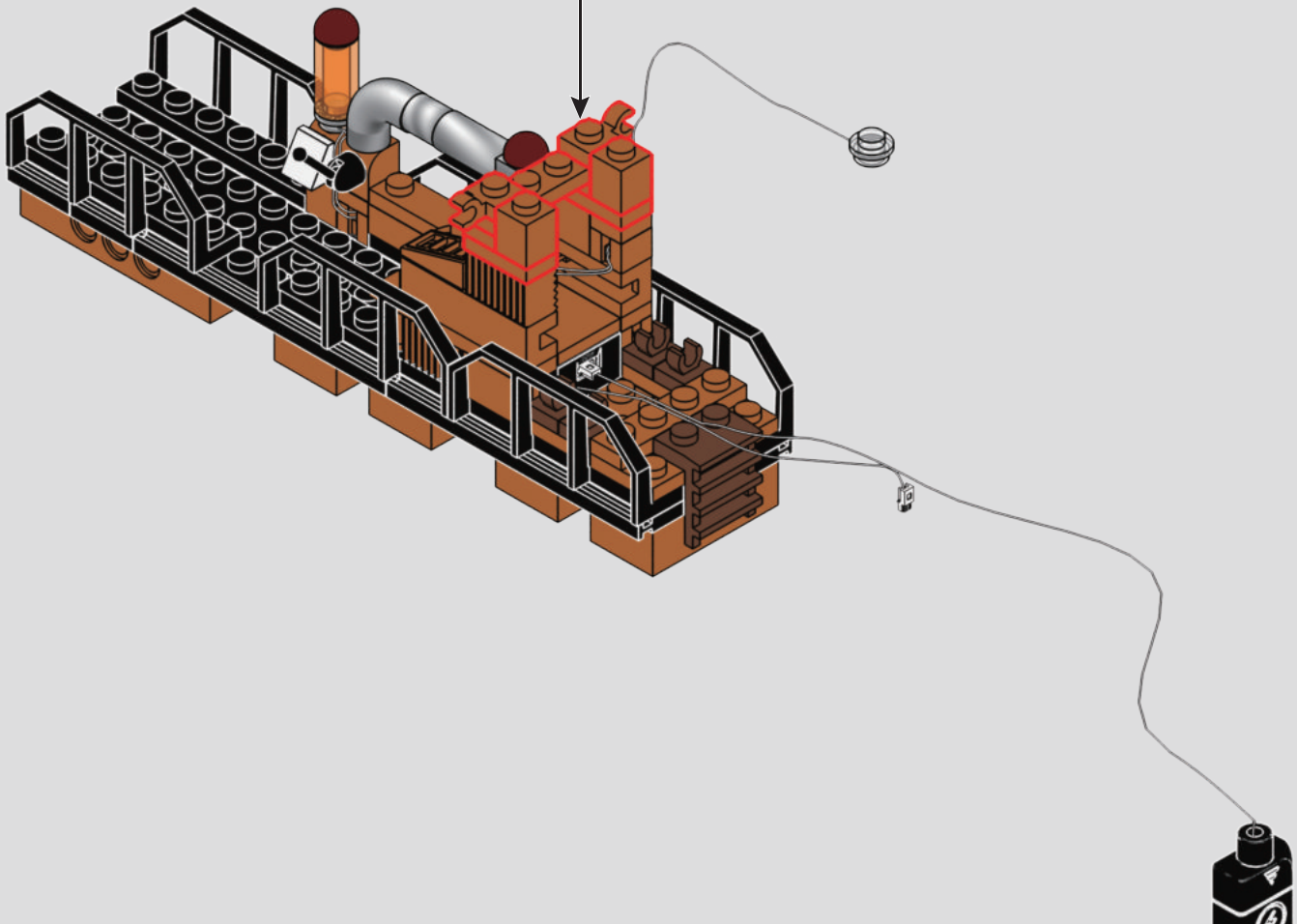

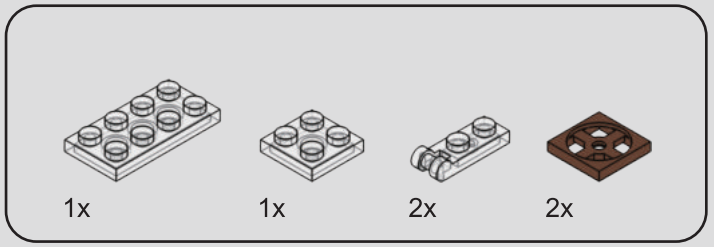

122

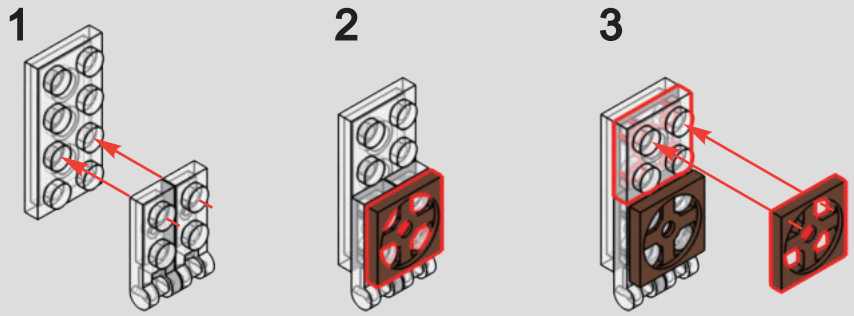

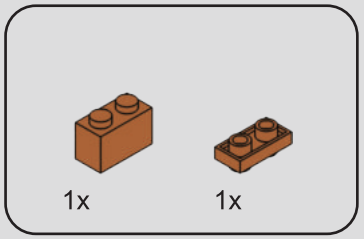

123

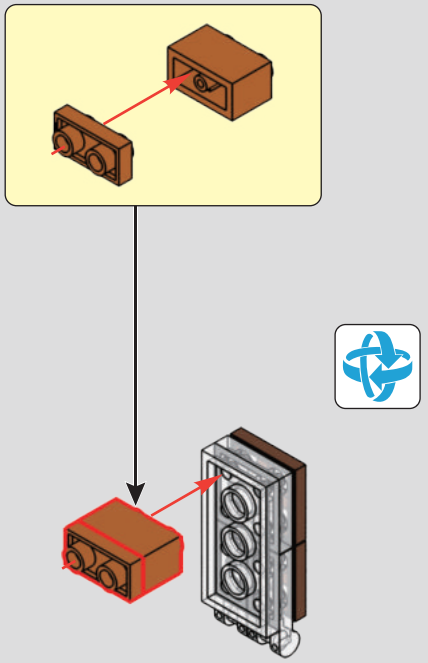

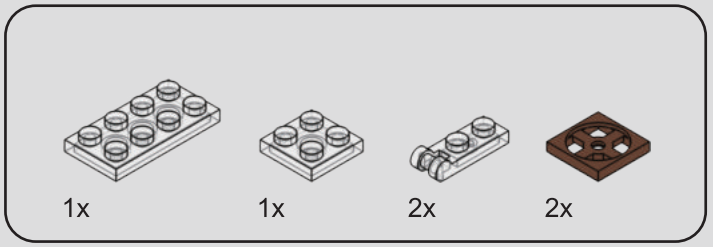

124

1

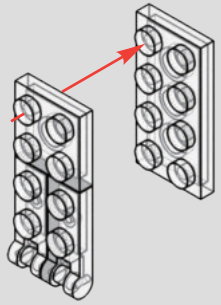

2

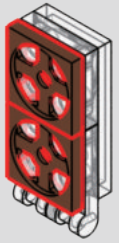

125

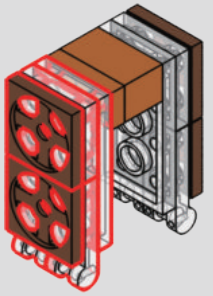

126

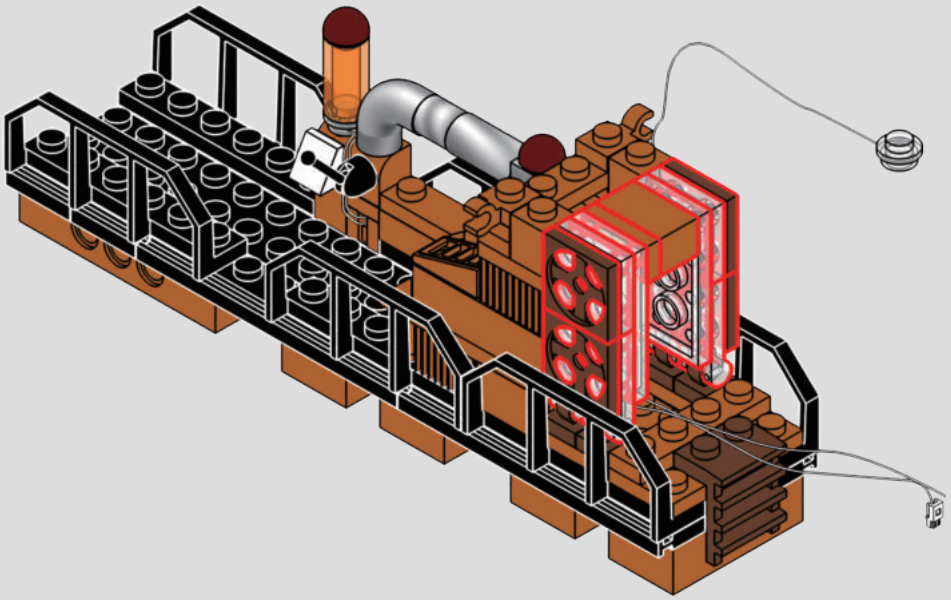

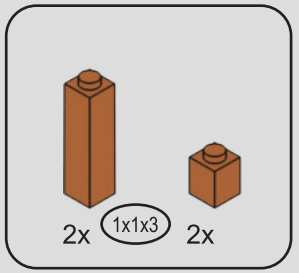

127

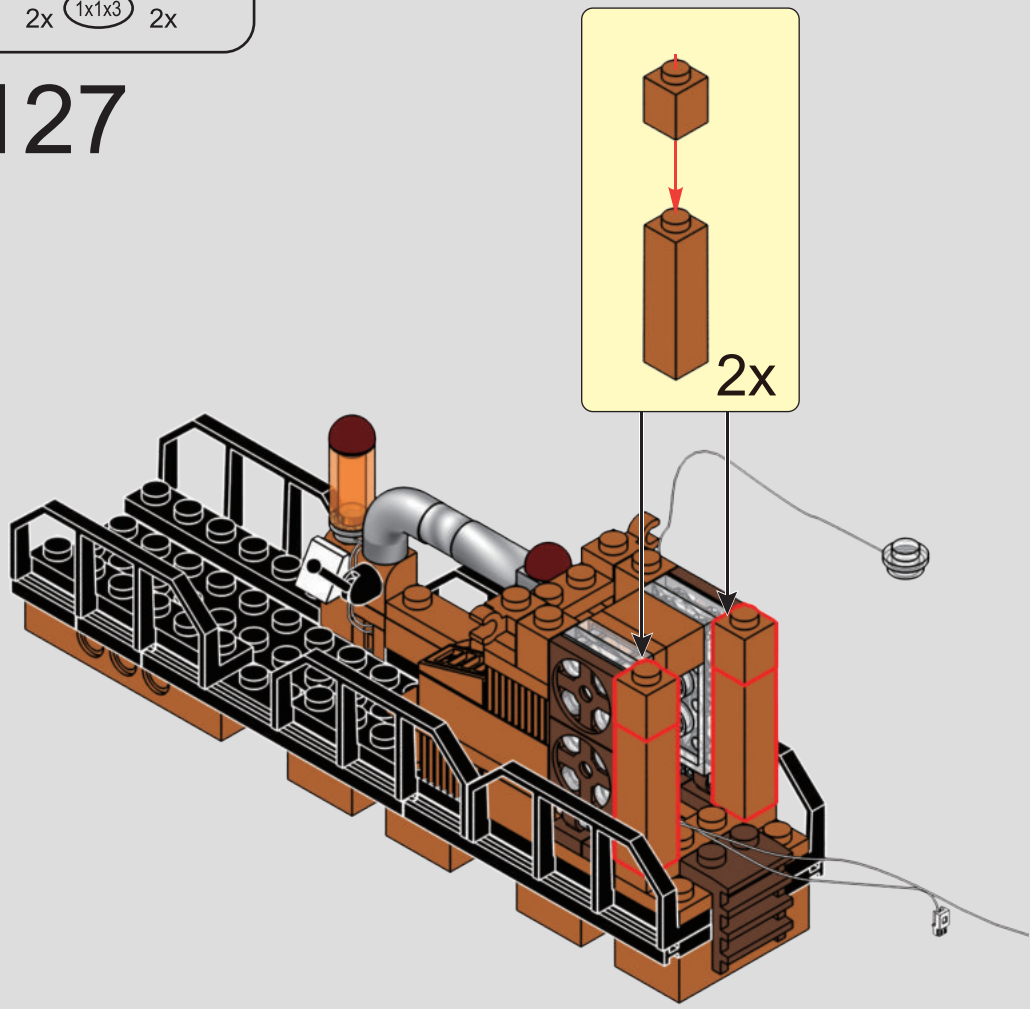

128

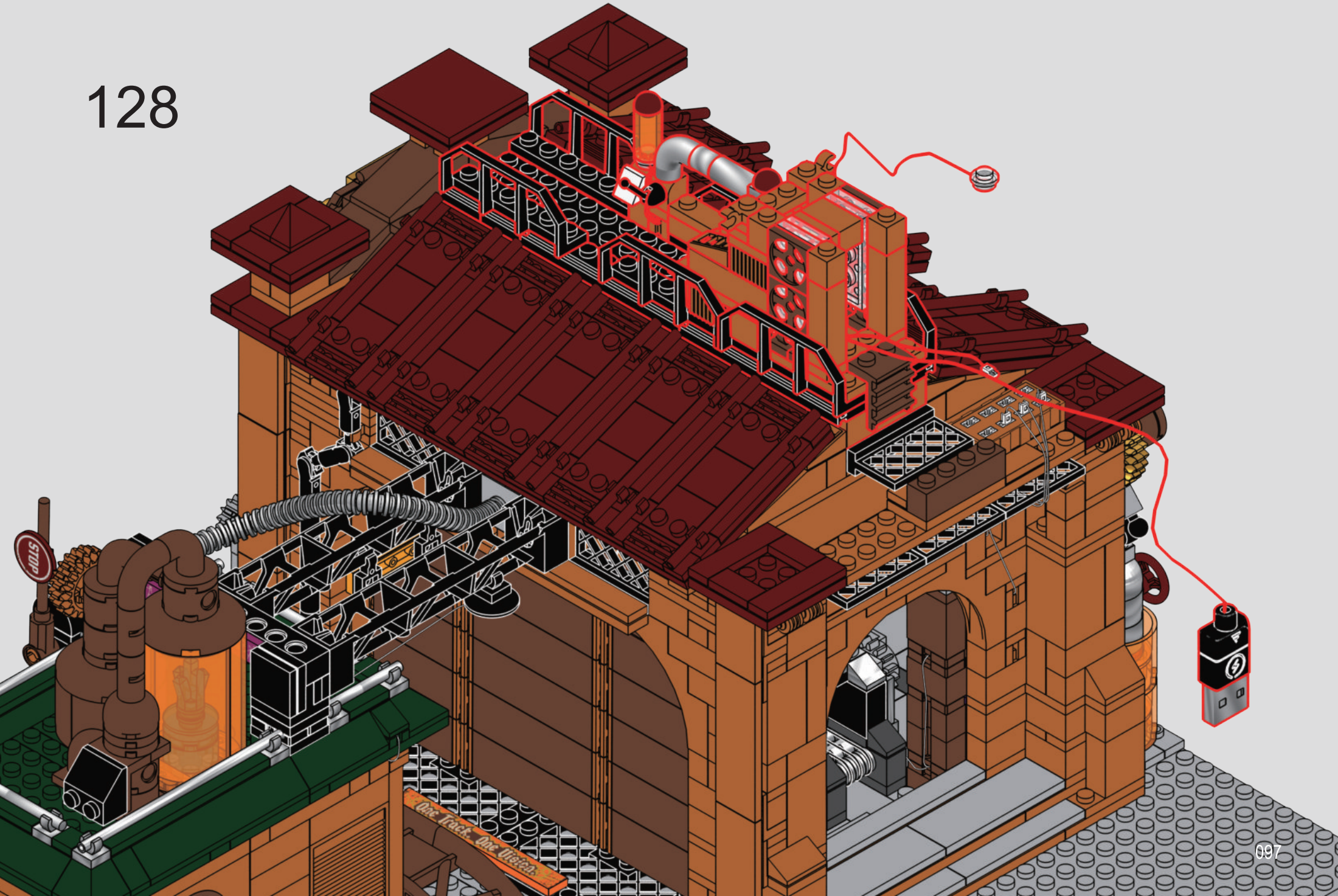

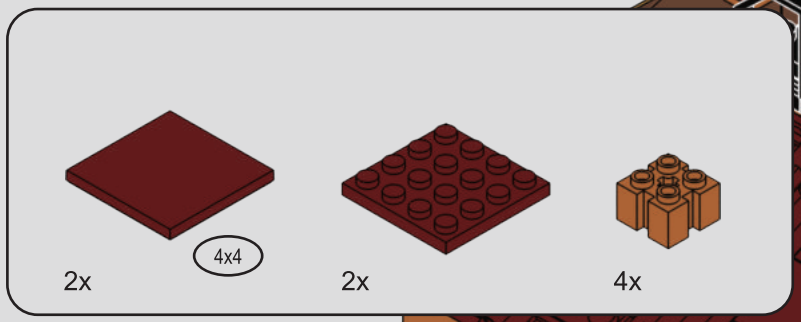

129

1

2

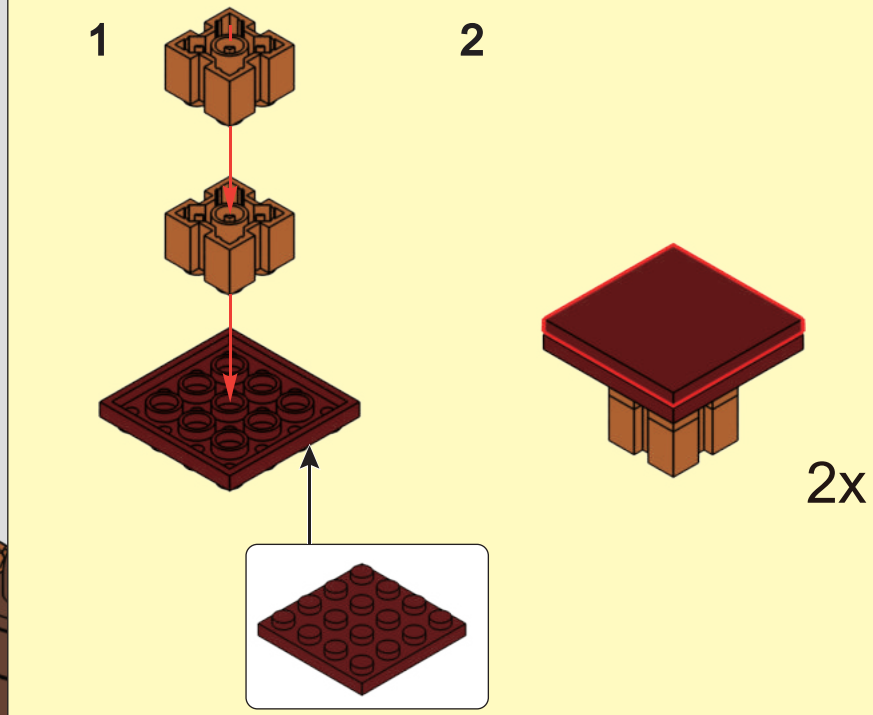


1x
1x
2x
1x
130
1
2
STOP
One Track, One Vision

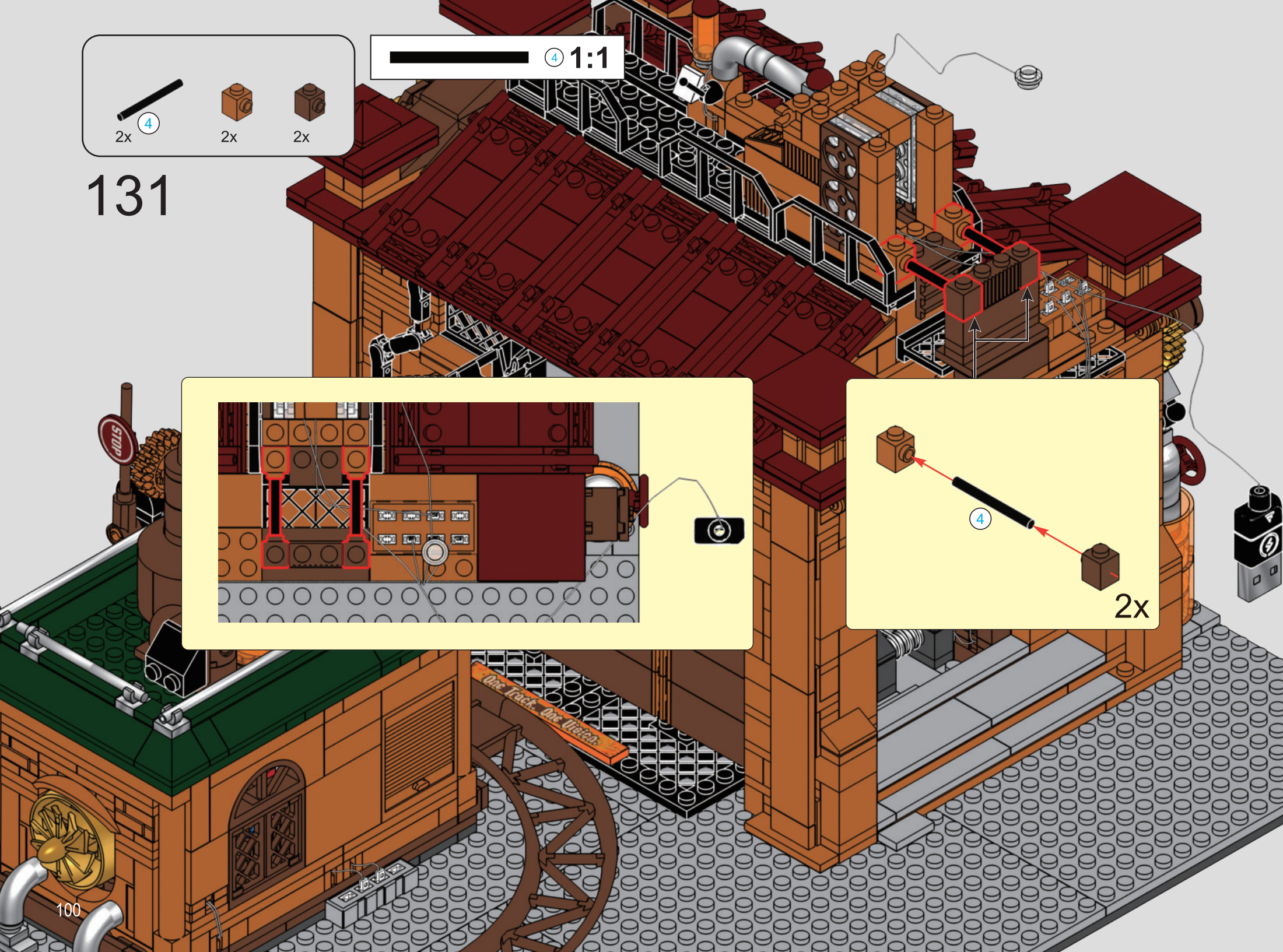
2x
4
2x
2x
4 1:1
131
4
2x
100

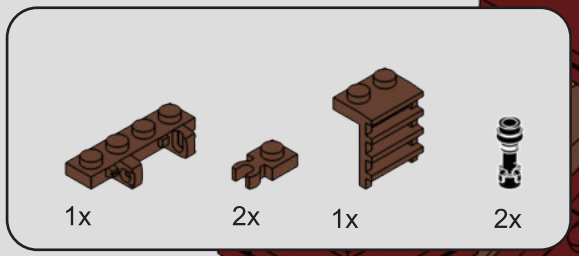

132

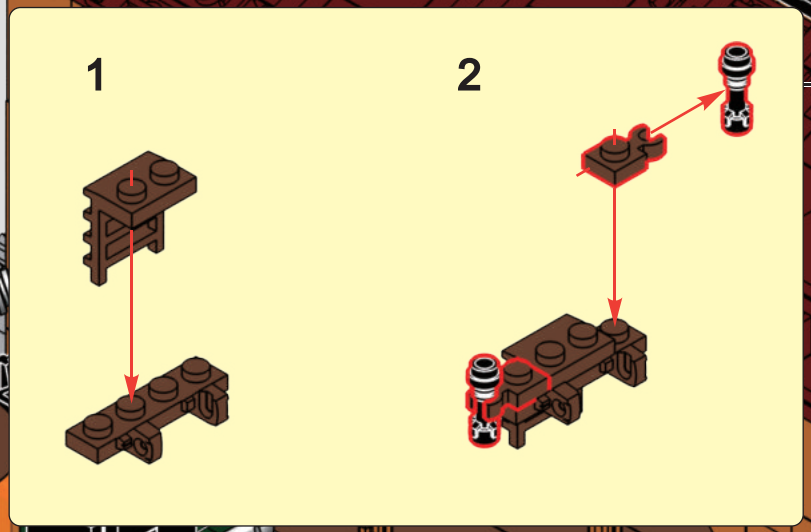

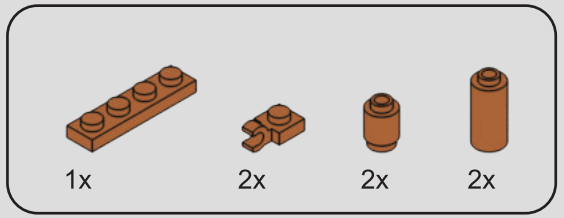

133

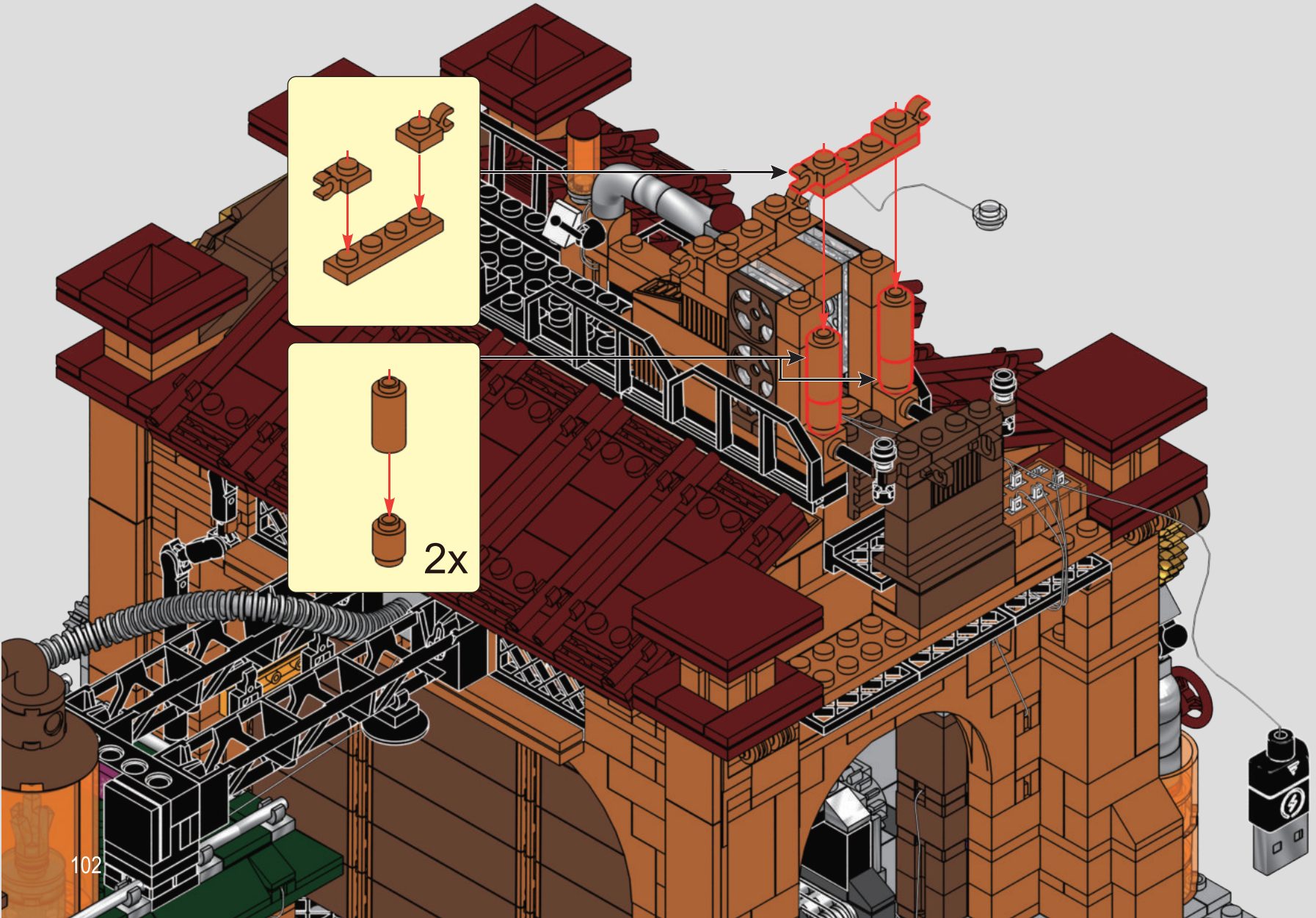

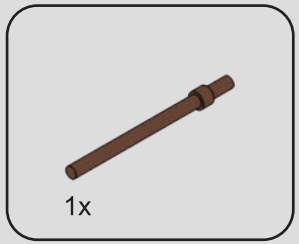

134

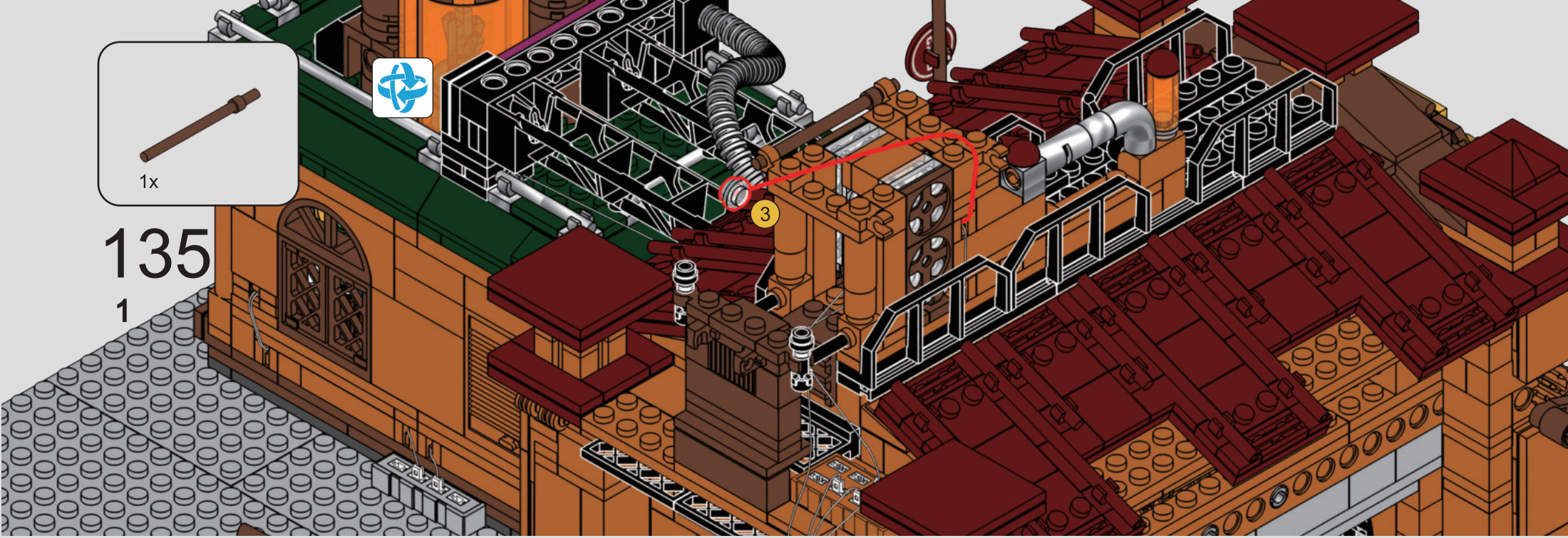
1x
135
1
3

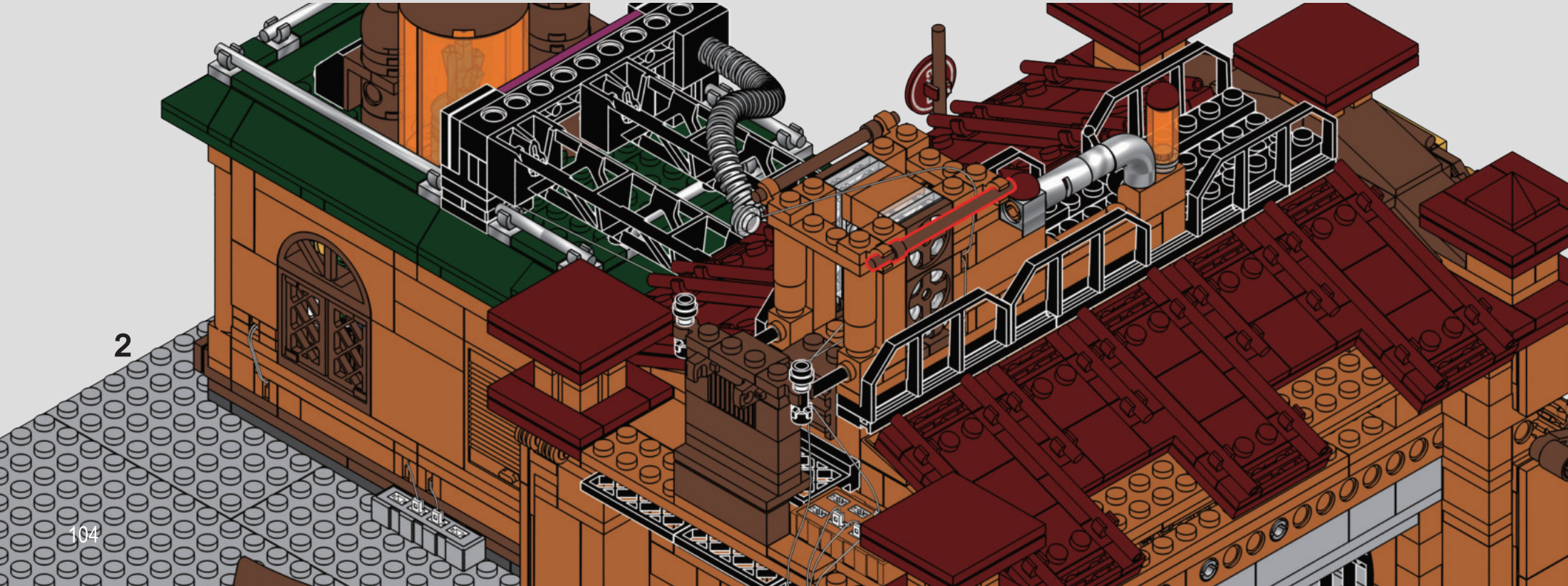
2

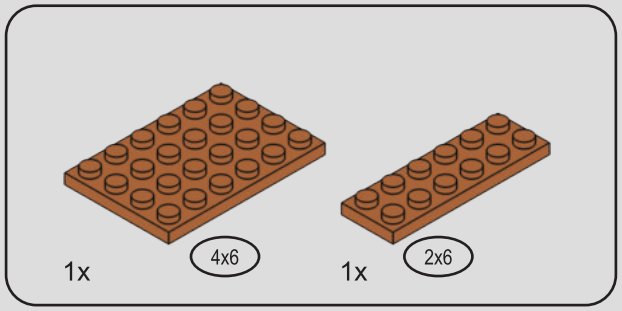

136

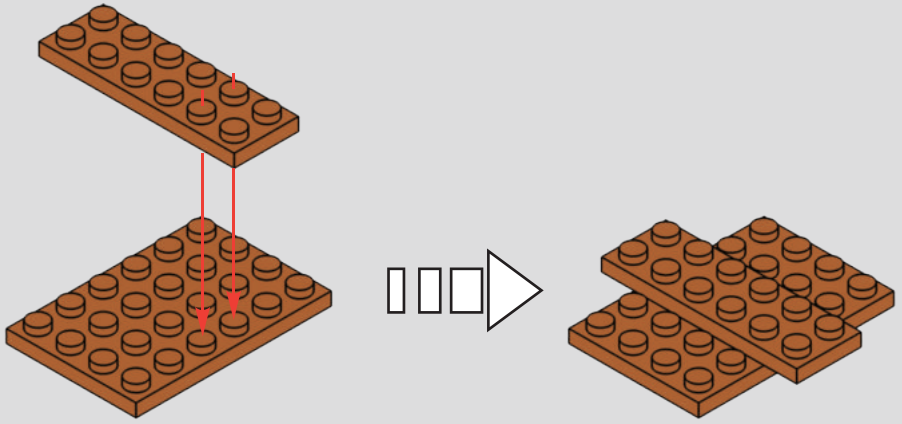

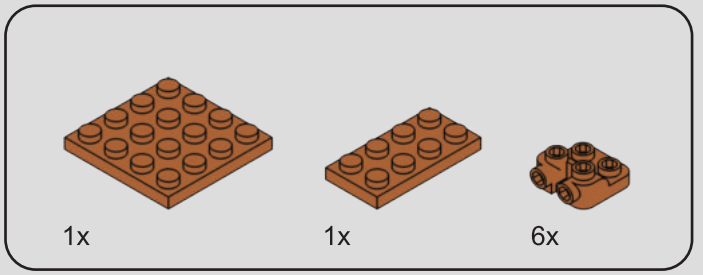

137

1

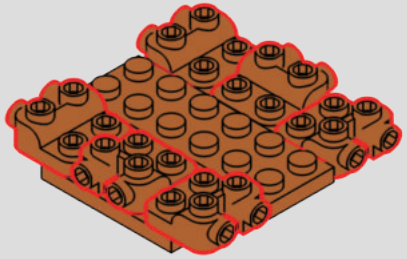

2

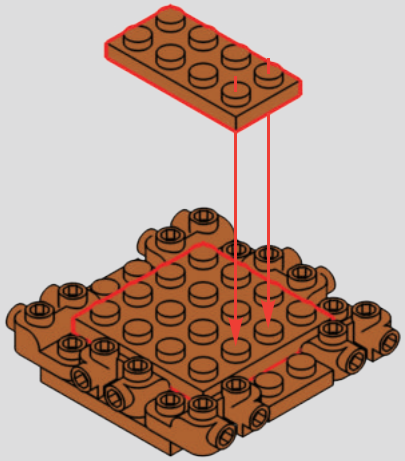

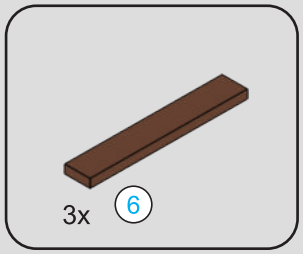



138

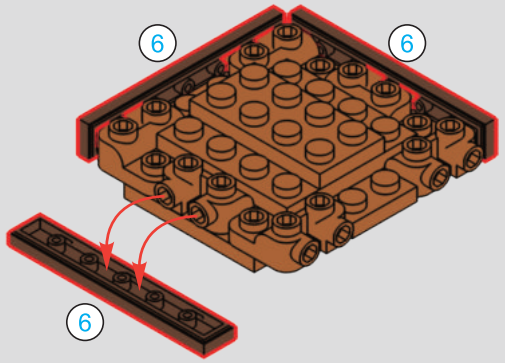



139

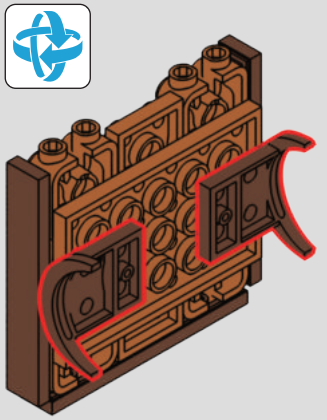

140

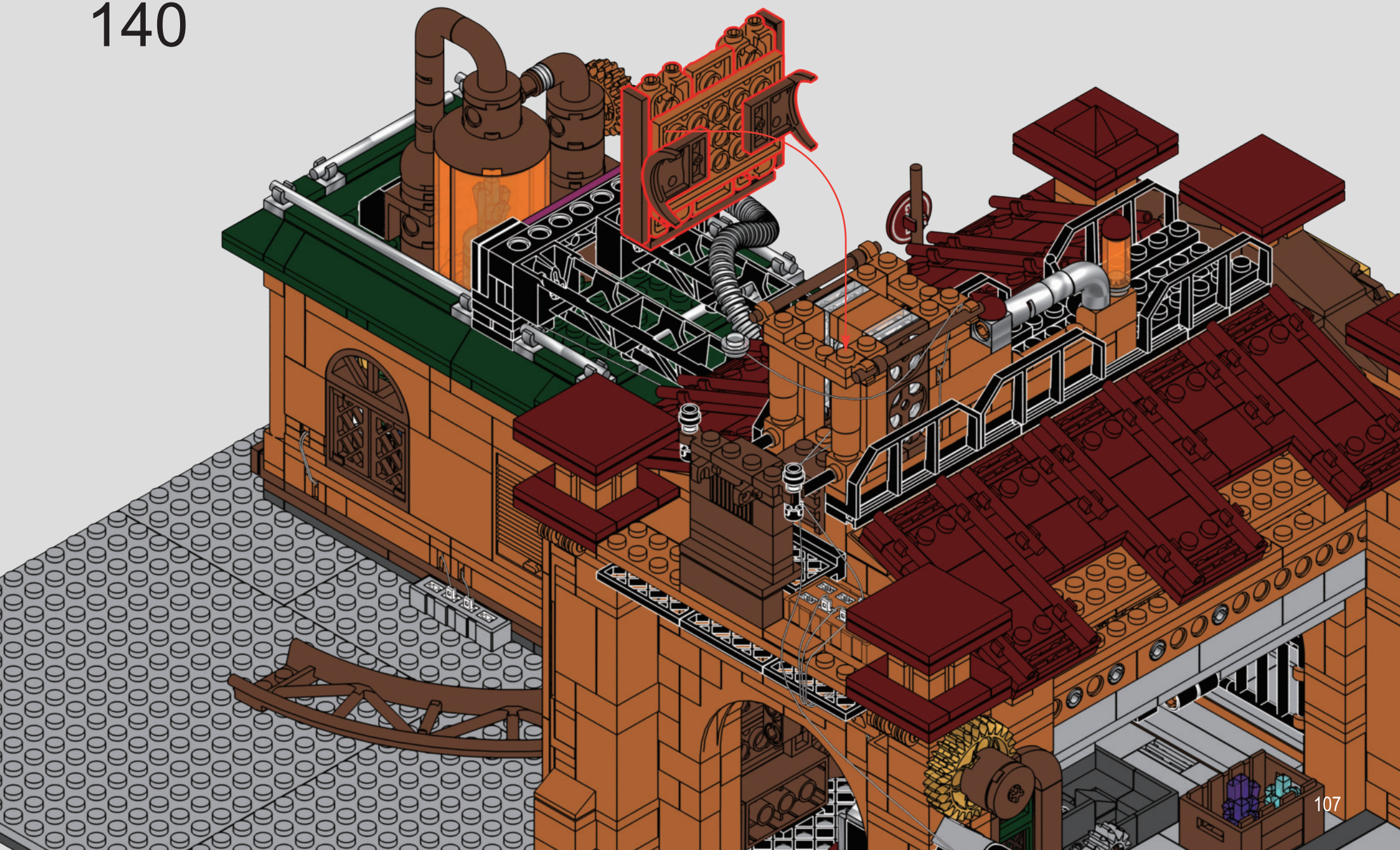

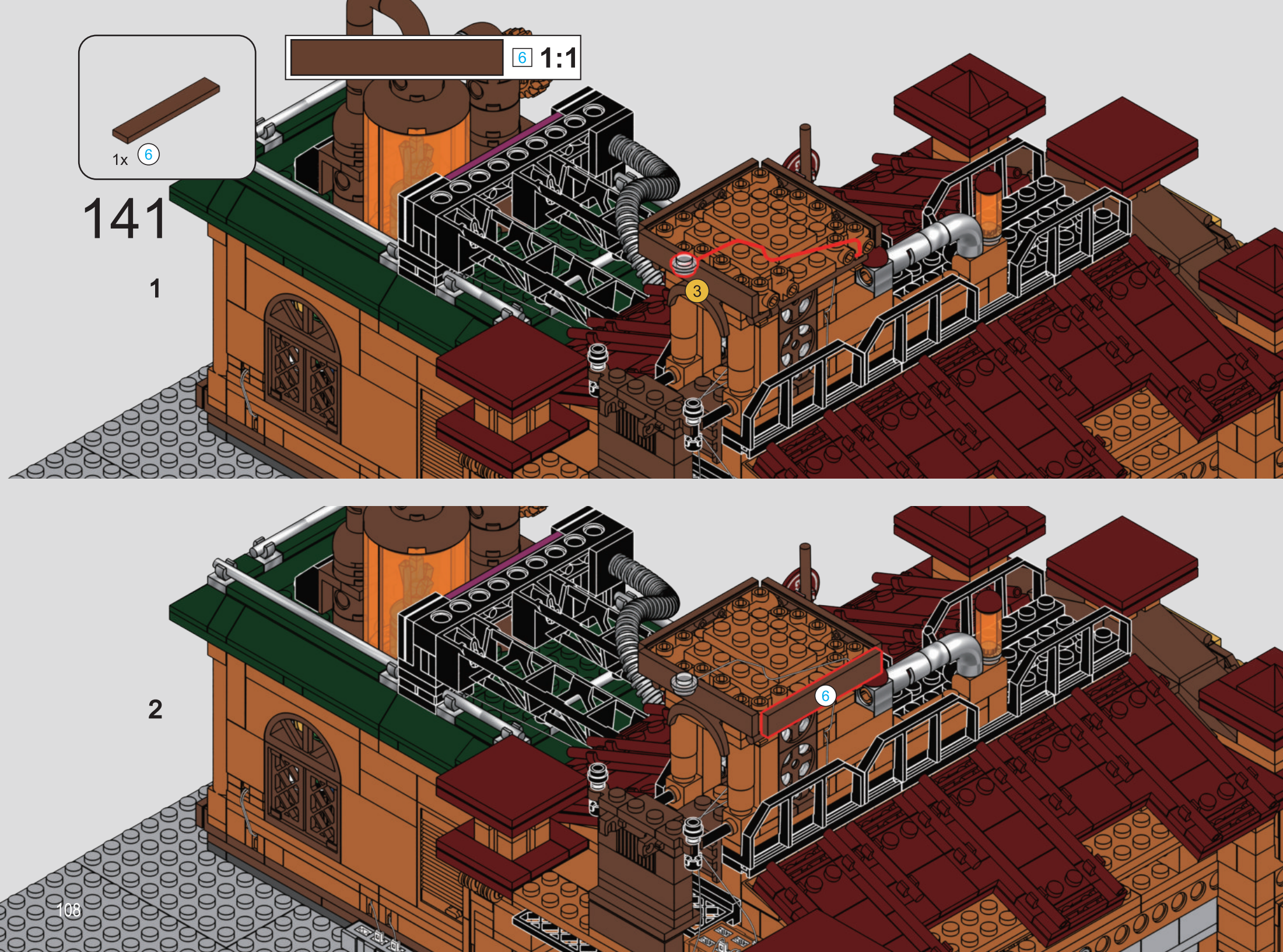
1x 6
6 1:1
141
1
3
2
6

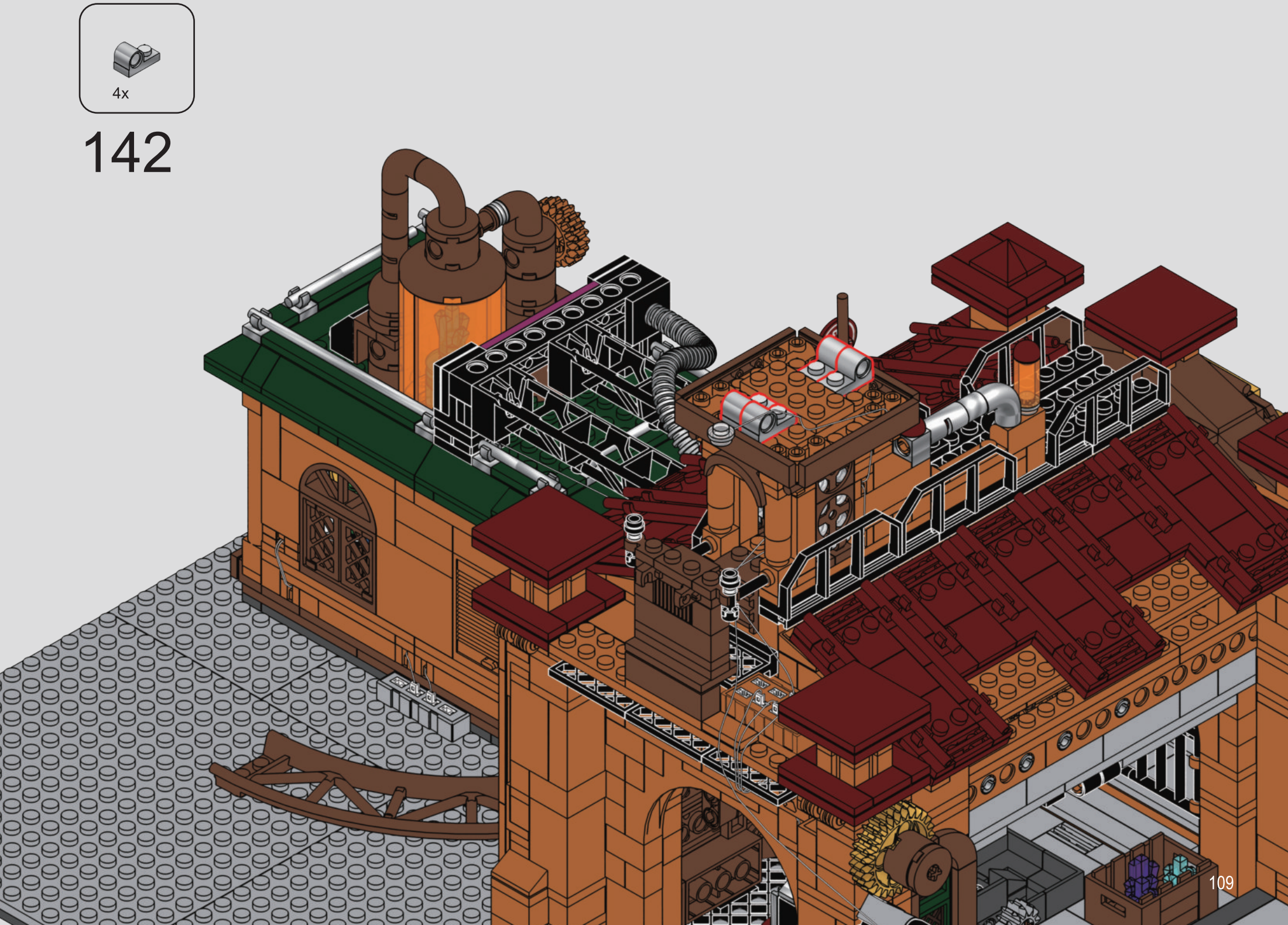
4x
142

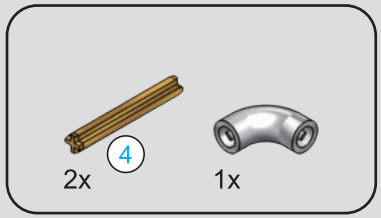

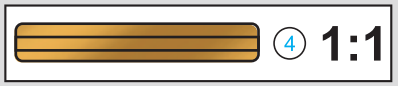

143

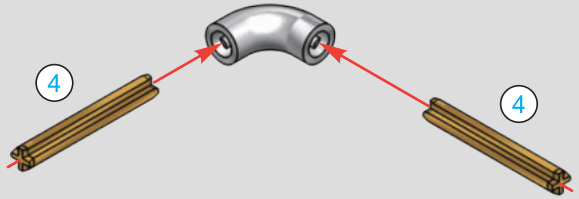

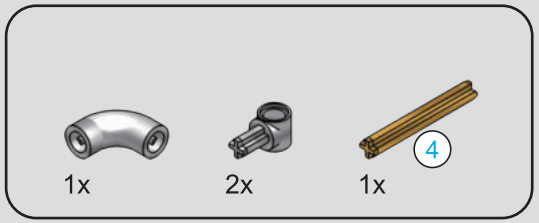



144

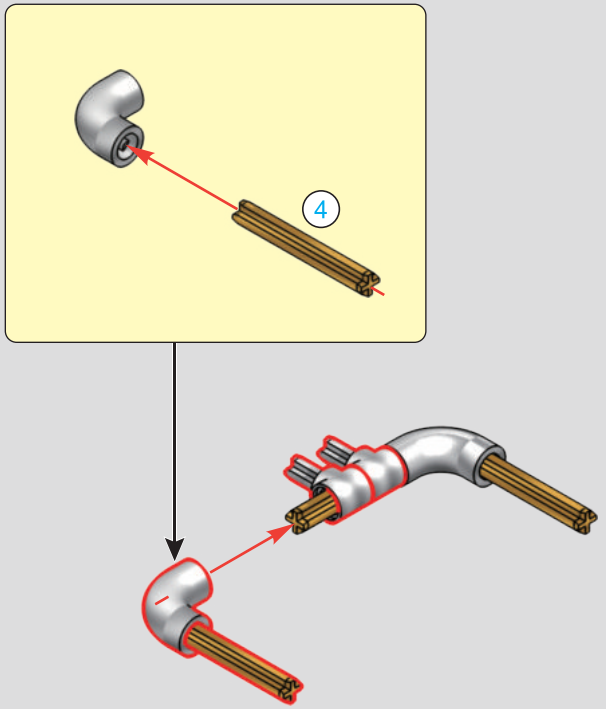

145

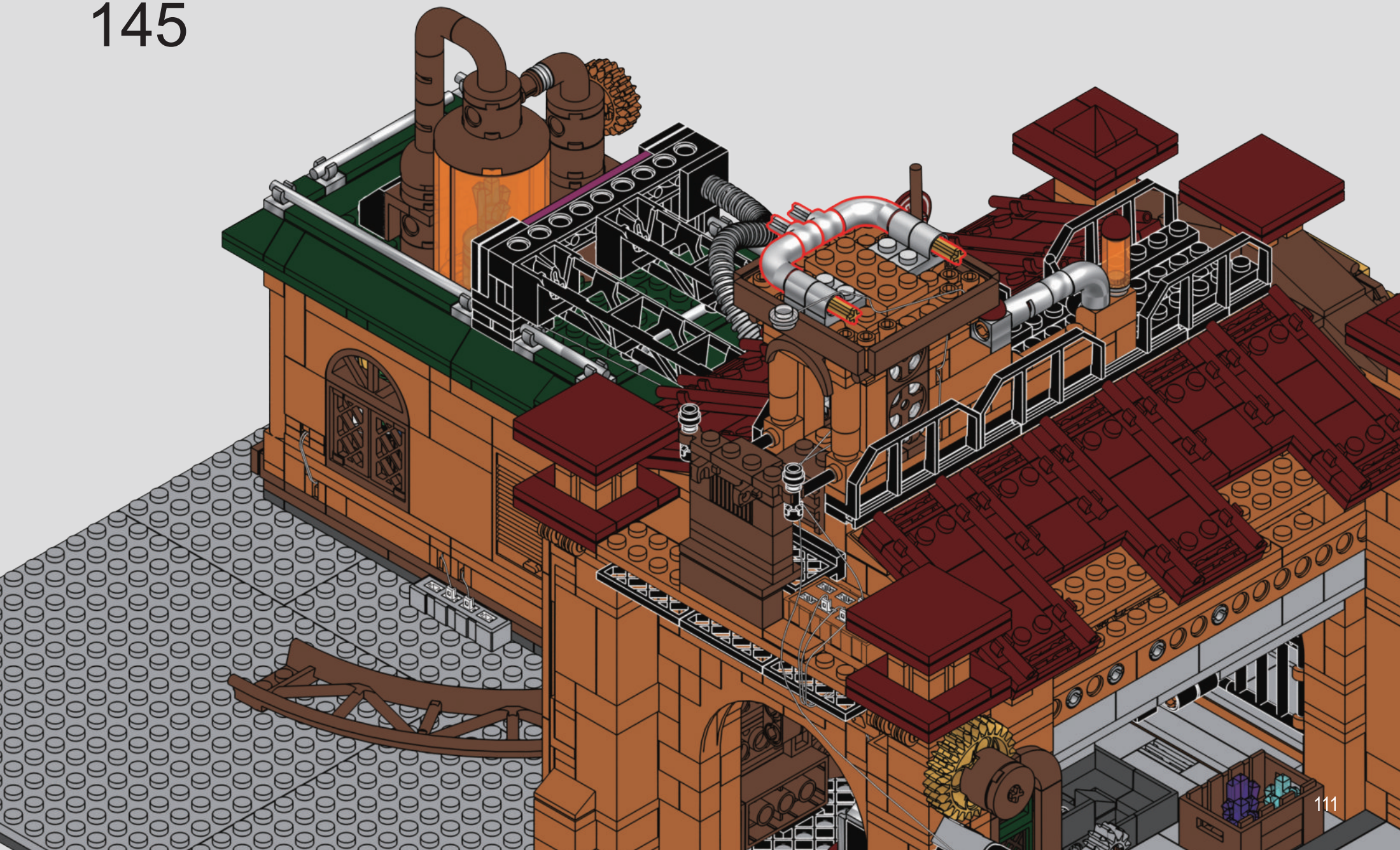

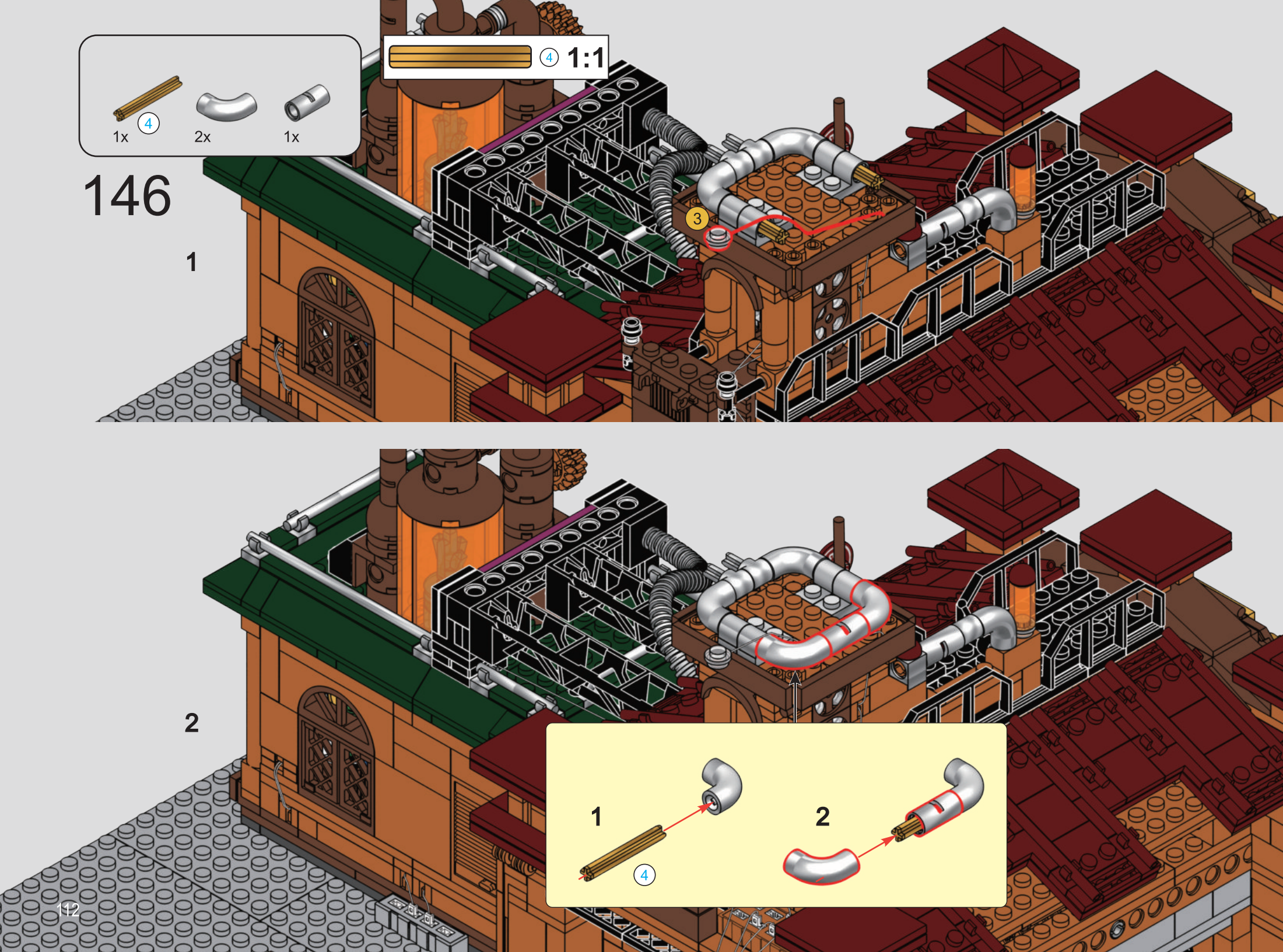
1x
4
2x
1x
4 1:1
146
1
3
2
1
2
4

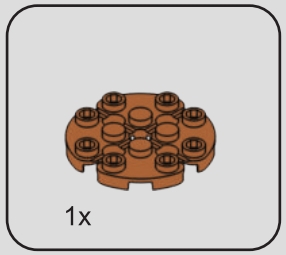

147

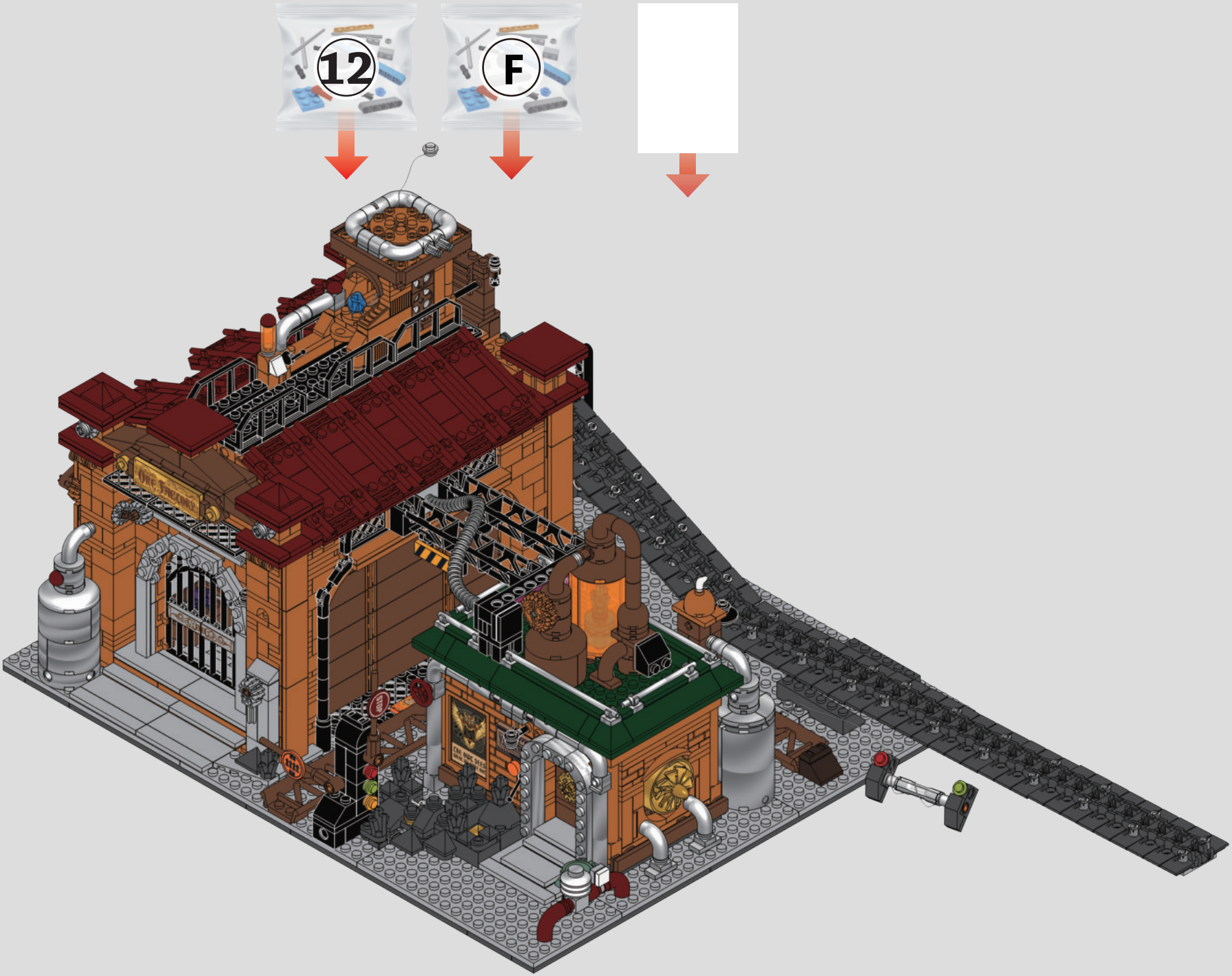
12
F

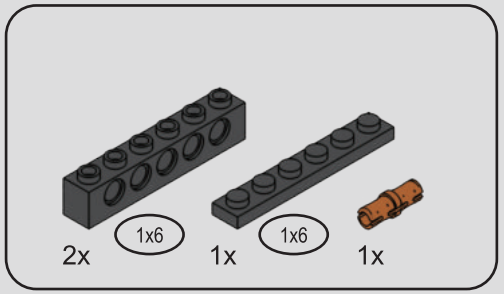

148

1

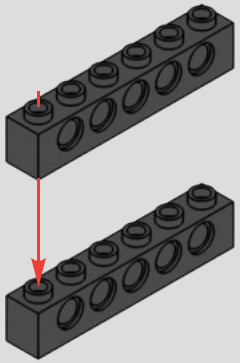

2

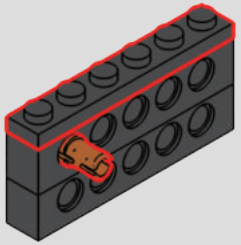

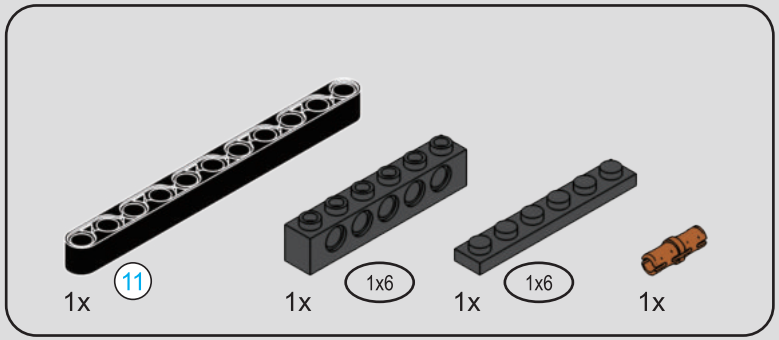

149

1

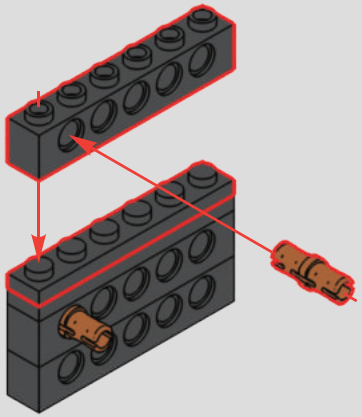

2

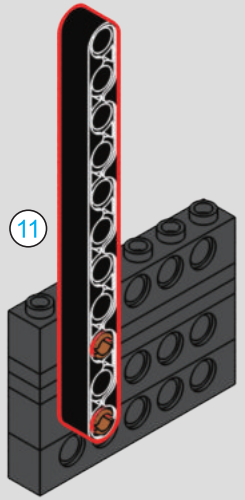



150



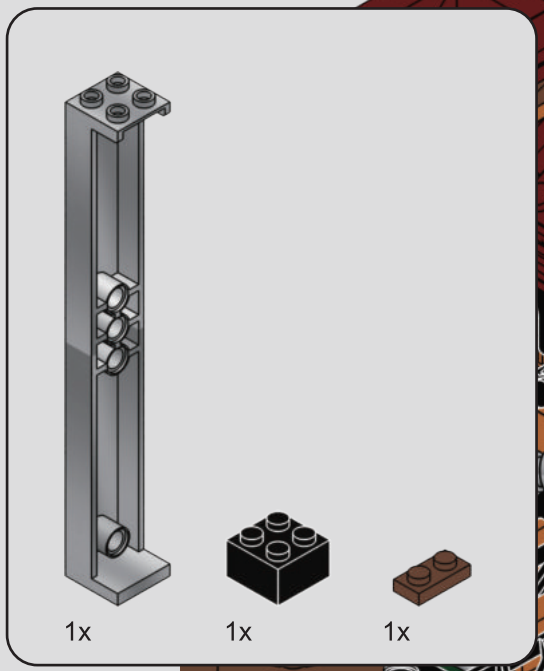

151

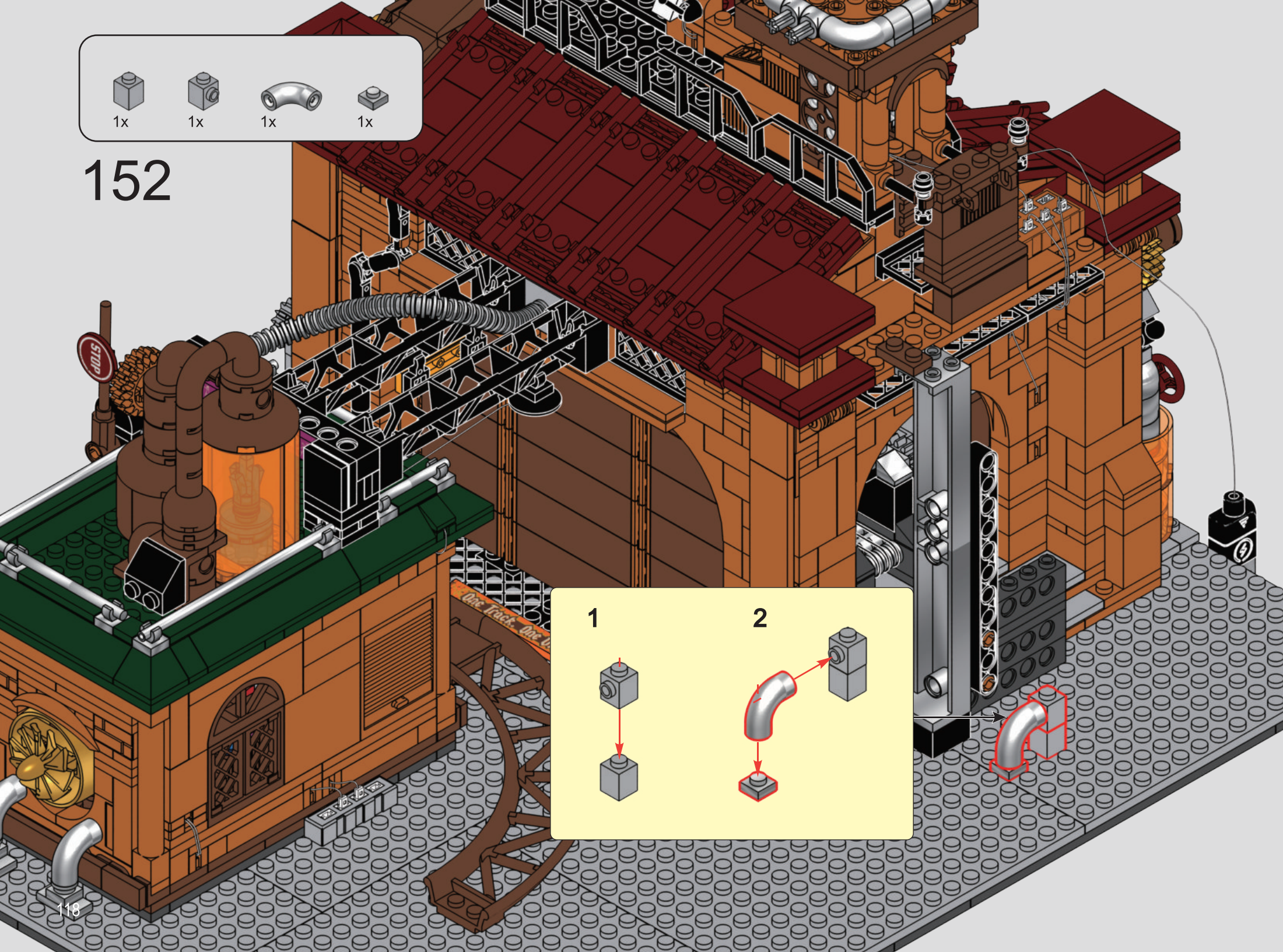
1x
1x
1x
1x
152
STOP
1
2
118

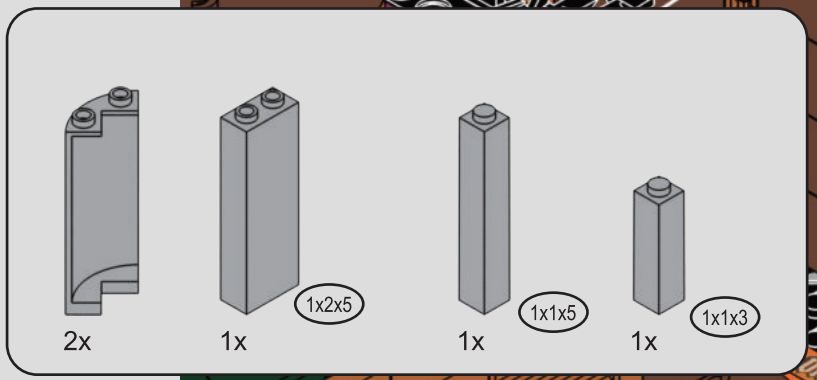

153

1

2



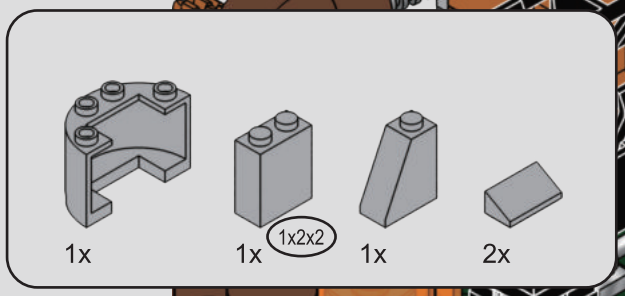

154

1

2

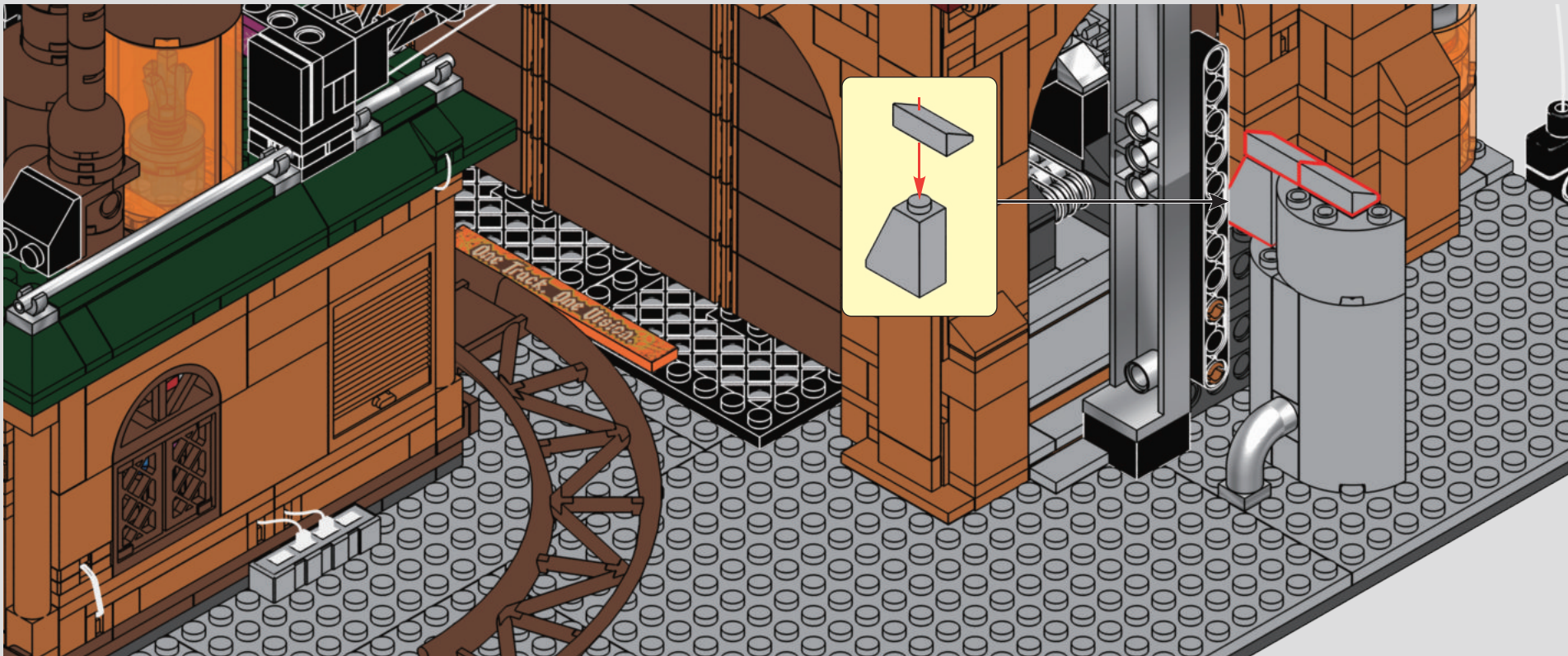

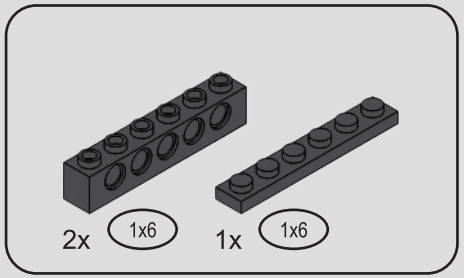

155

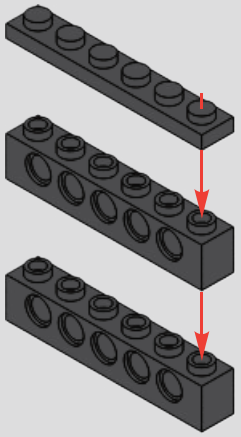

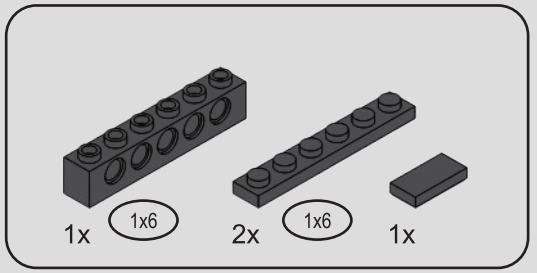

156

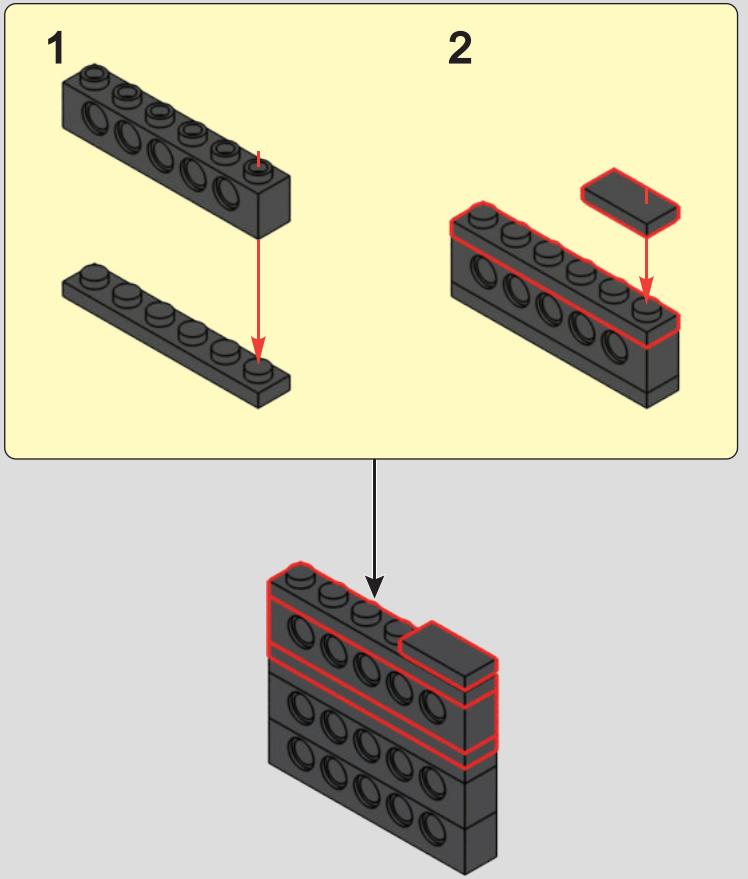

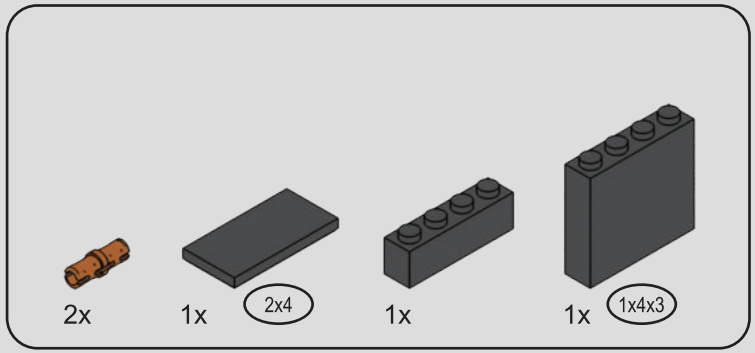

157

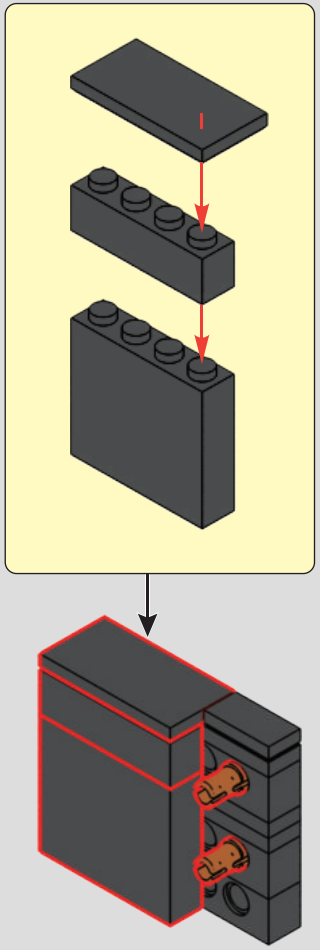

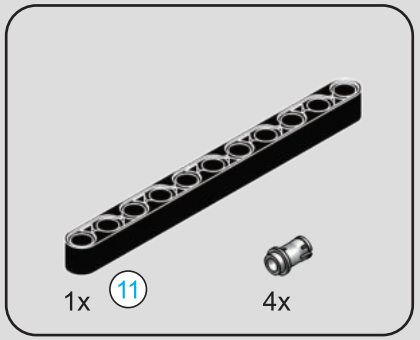

158

1

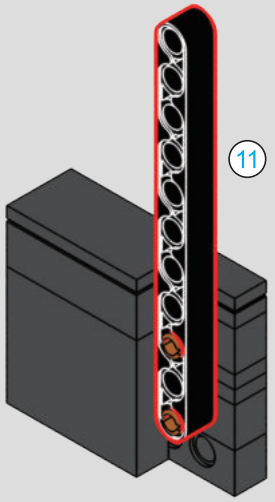

2

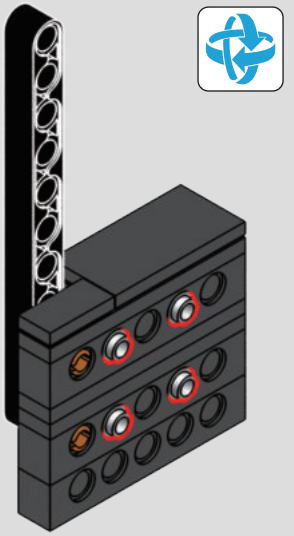



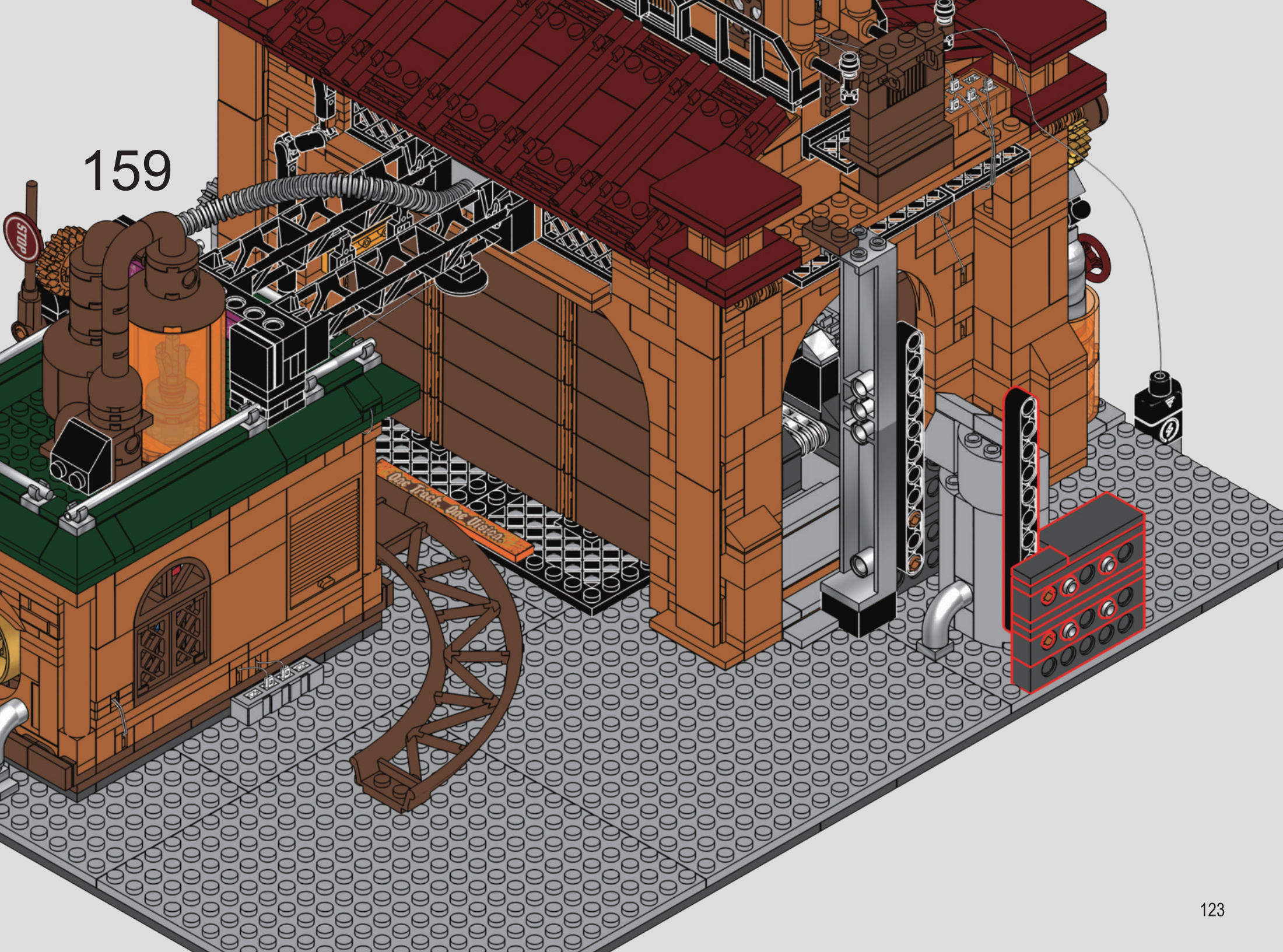
159
STOP
One Track. One Vision.

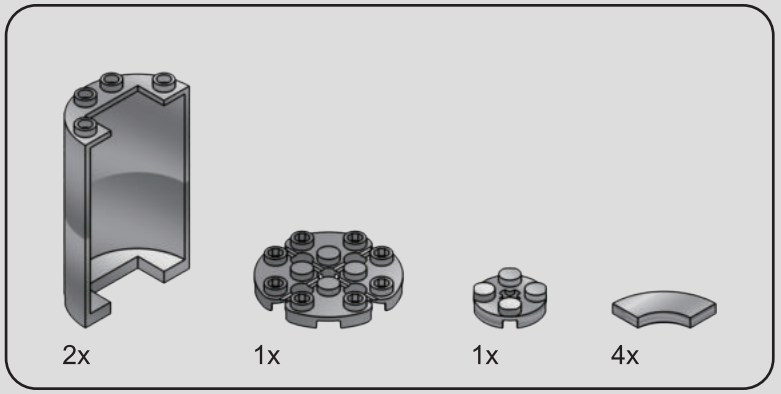

160

1

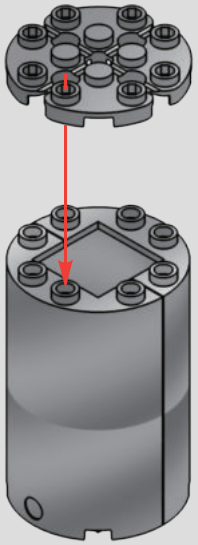

2

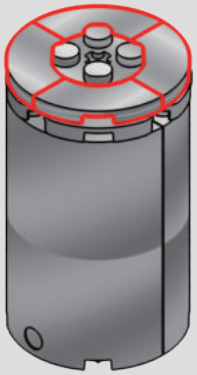

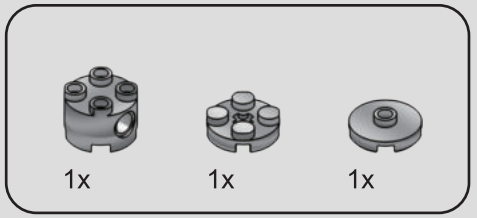

161

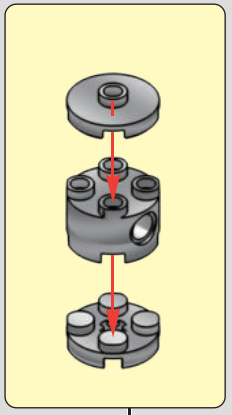

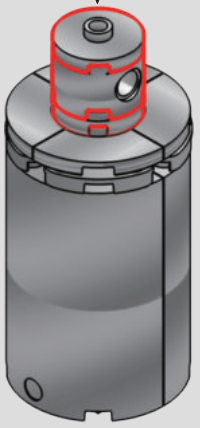


162
STOP
One Track. One Vision.

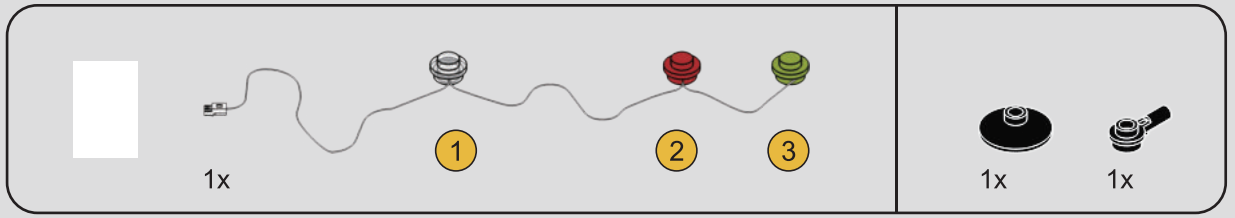

163

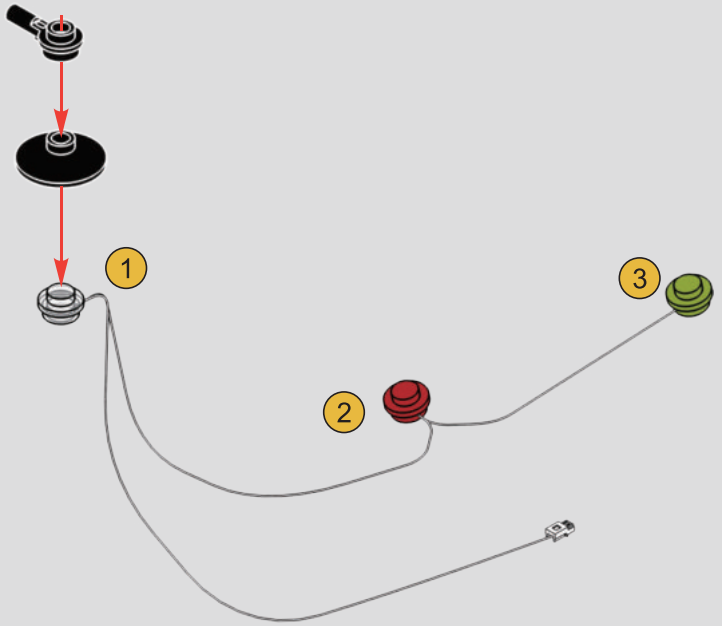

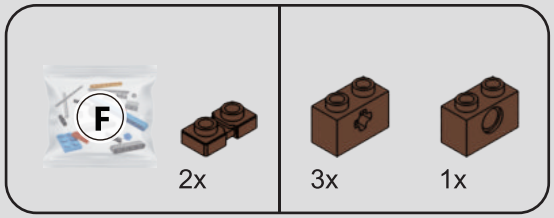

164

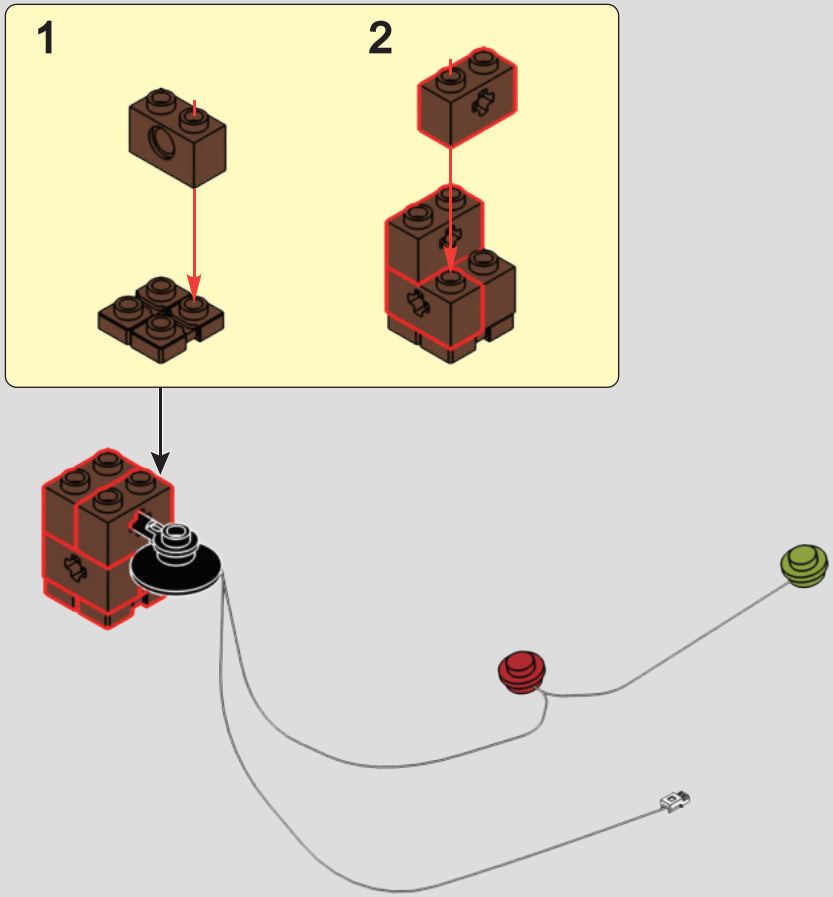

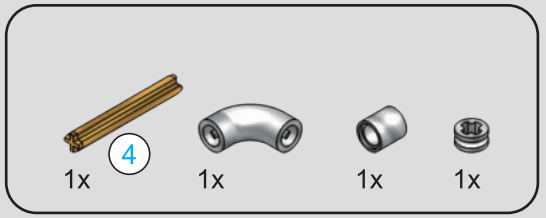

165

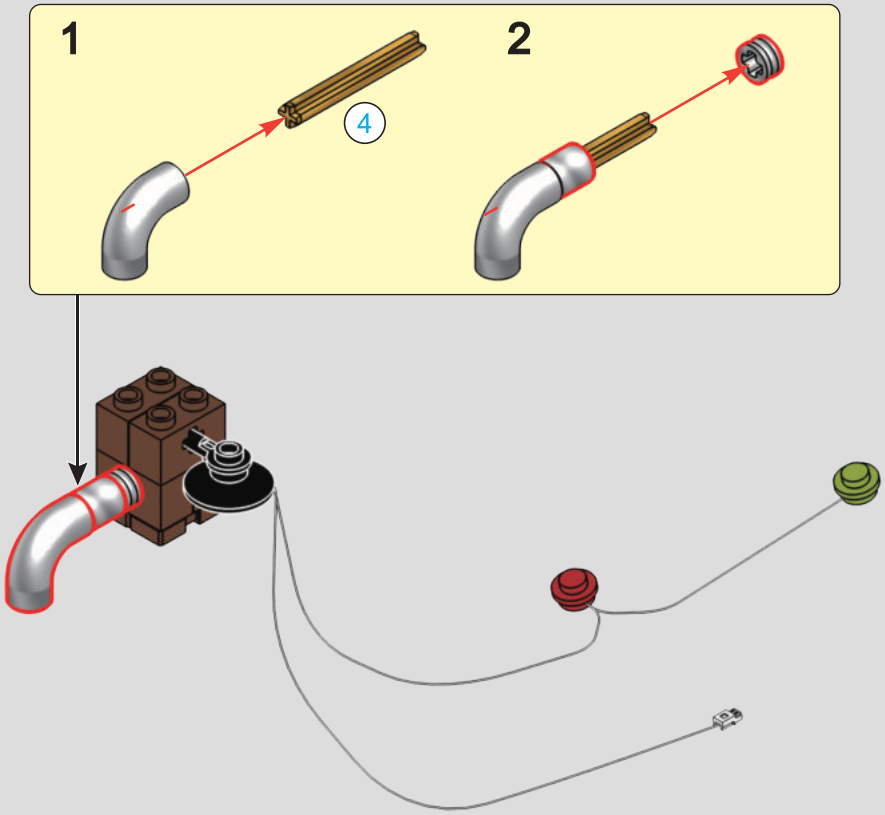



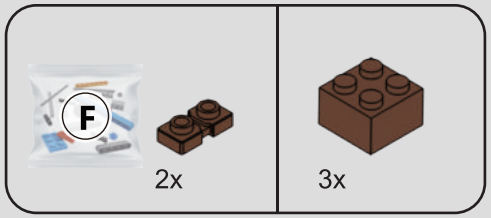

166

1

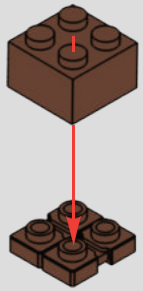

2

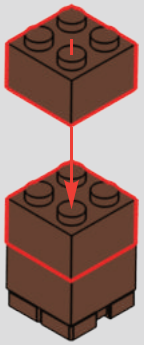

167

1

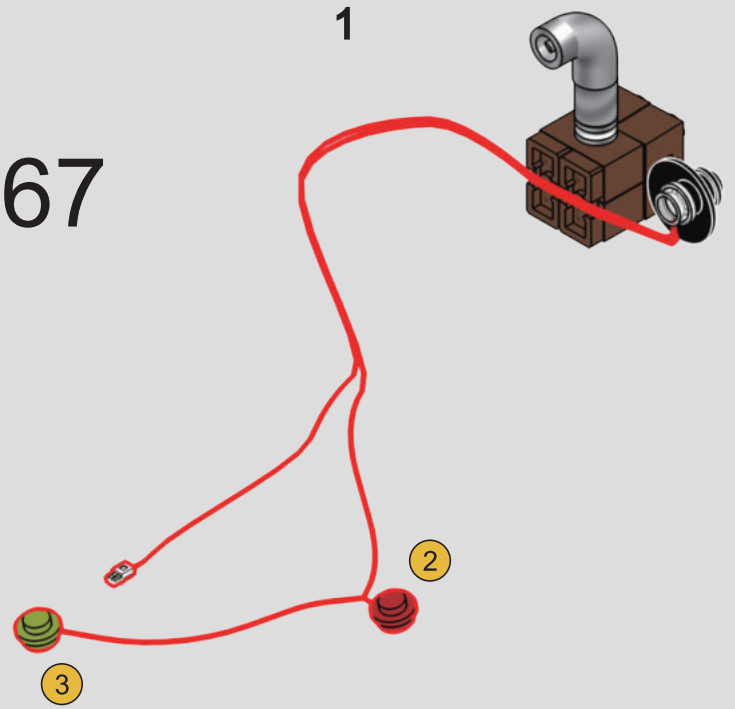

2

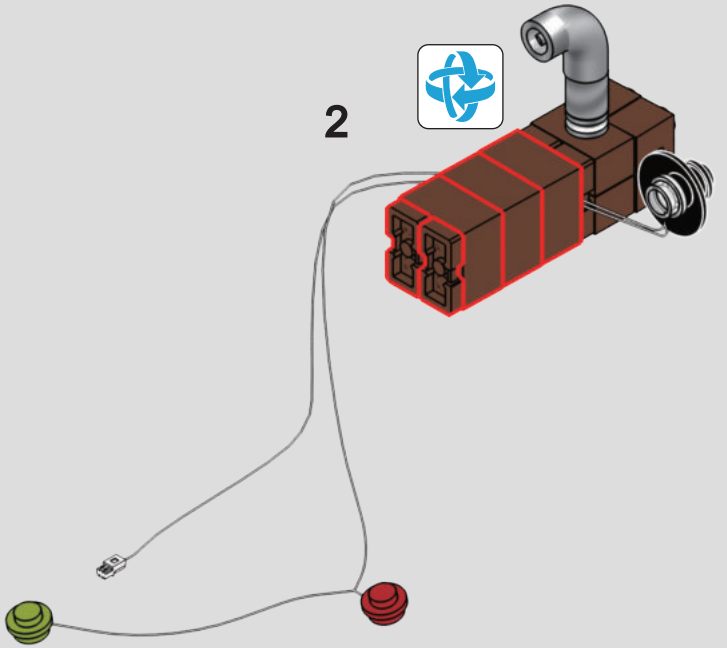

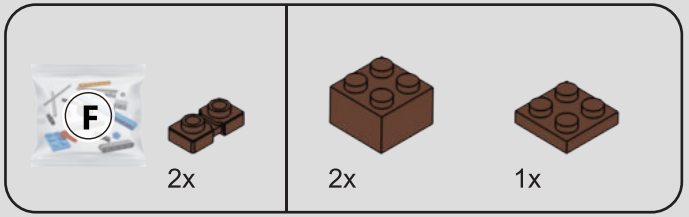

168

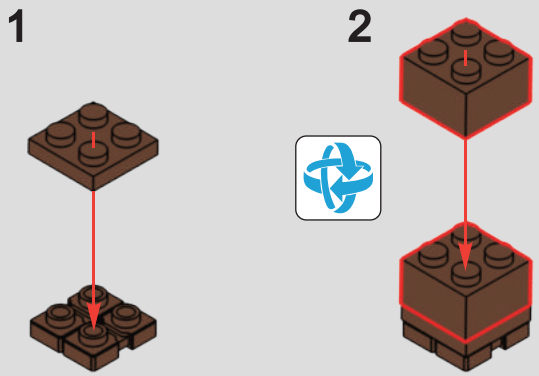

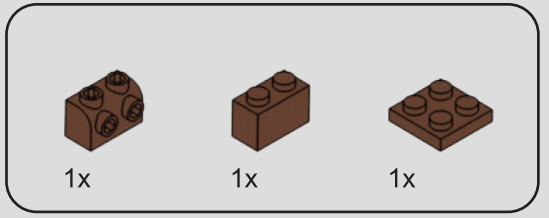

169

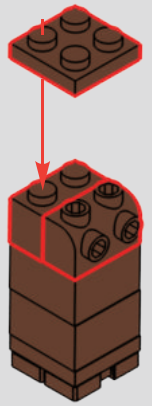

170

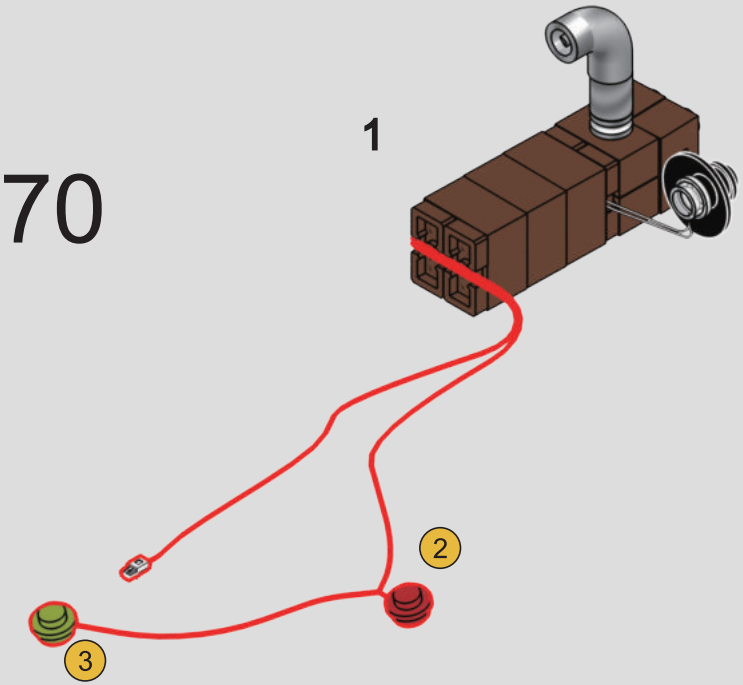

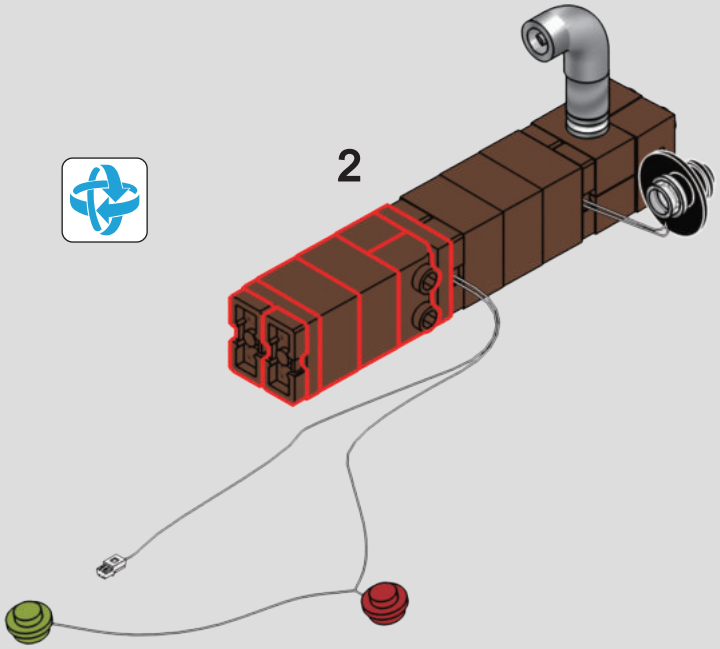

171

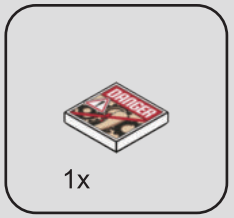

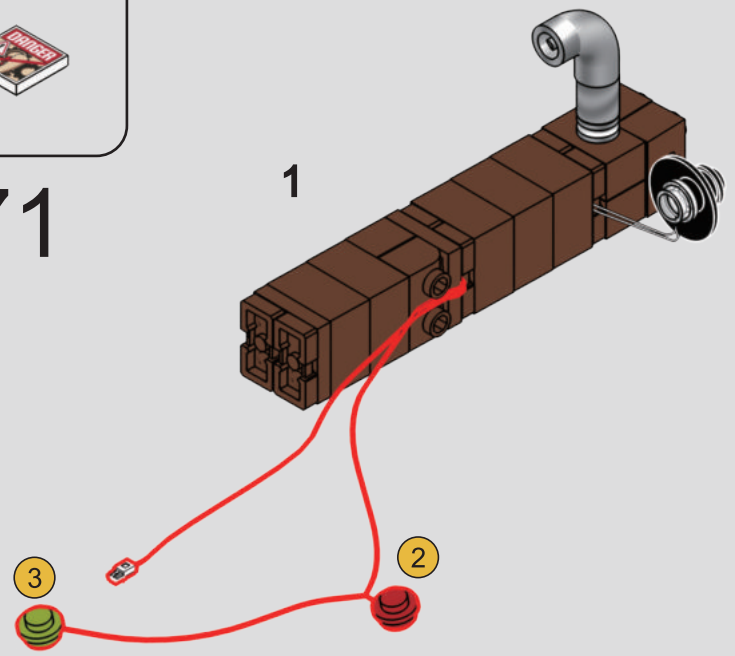

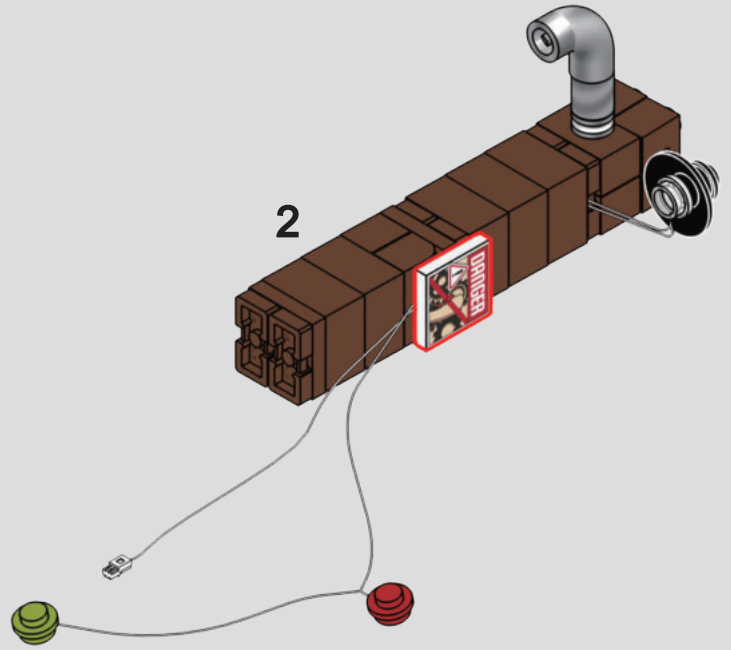

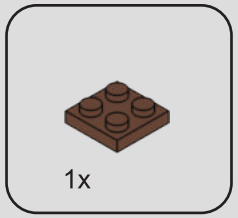

172

1

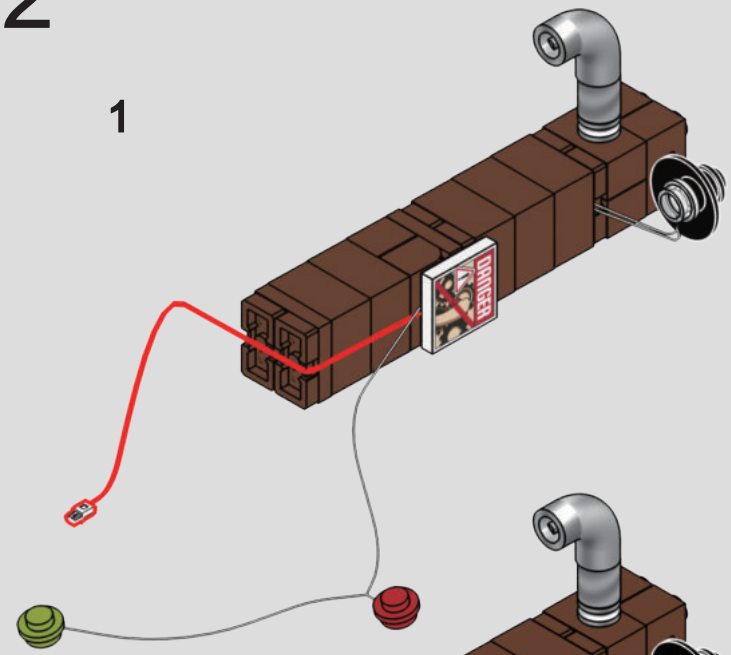

2

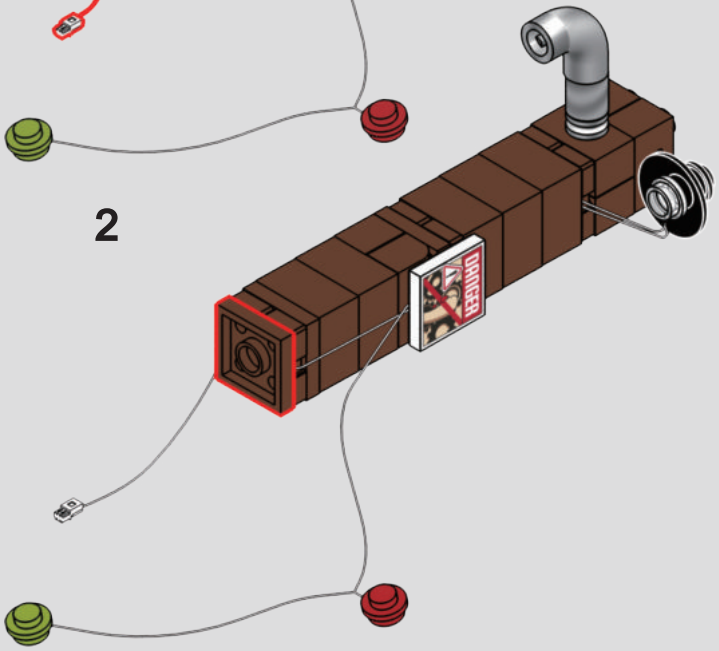

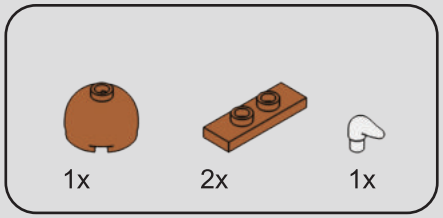

173

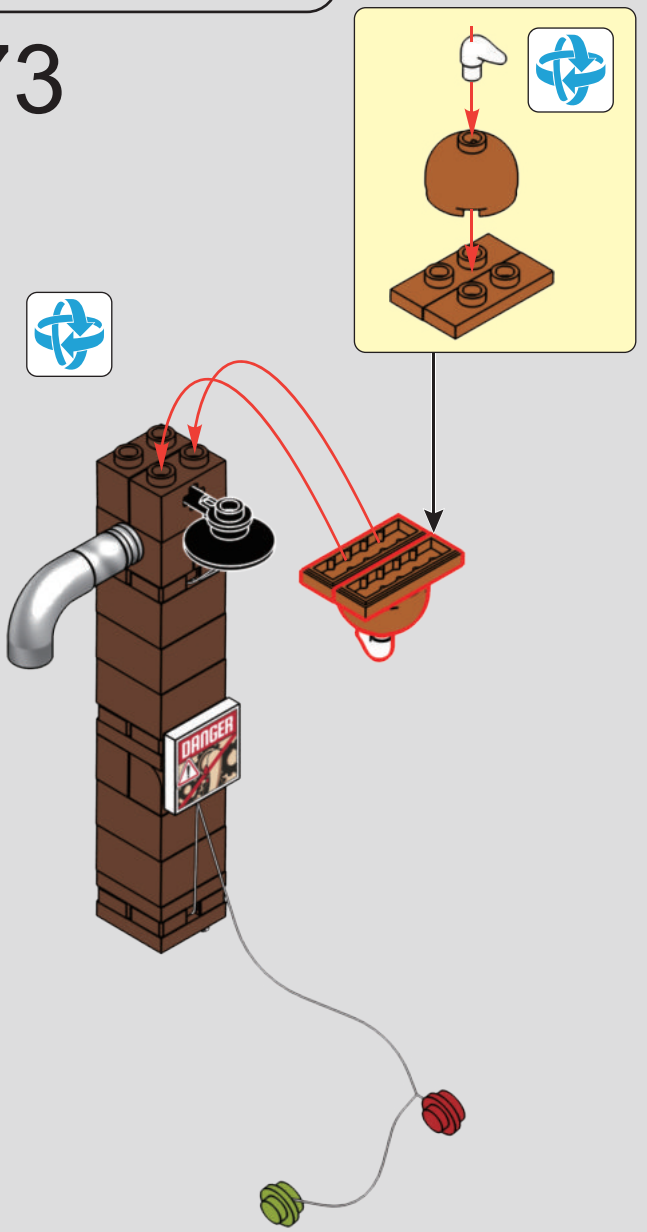

174

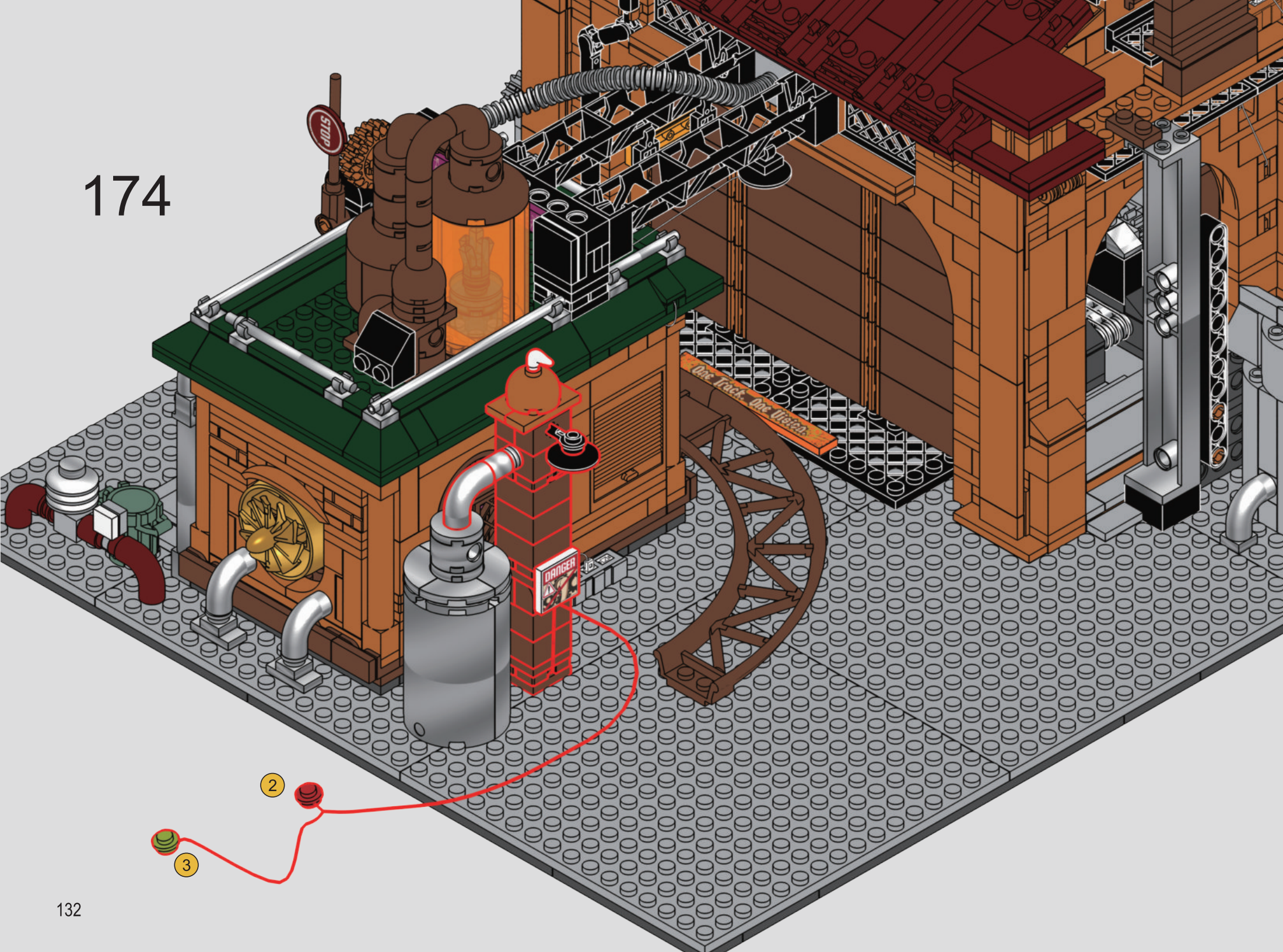


175
DANGER

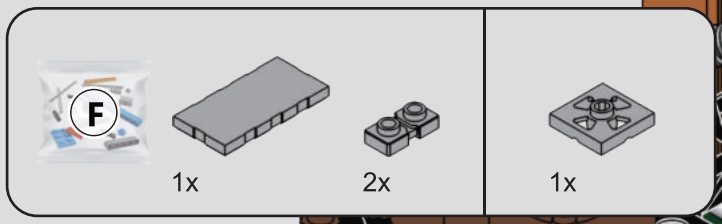

176 1

2



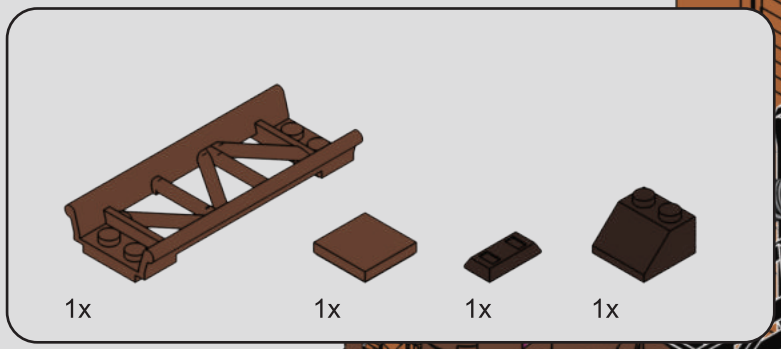

177

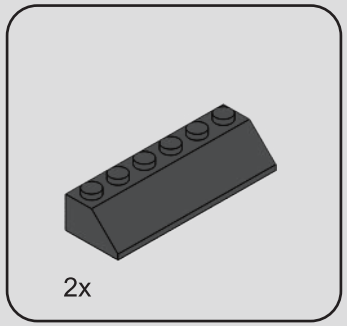

178

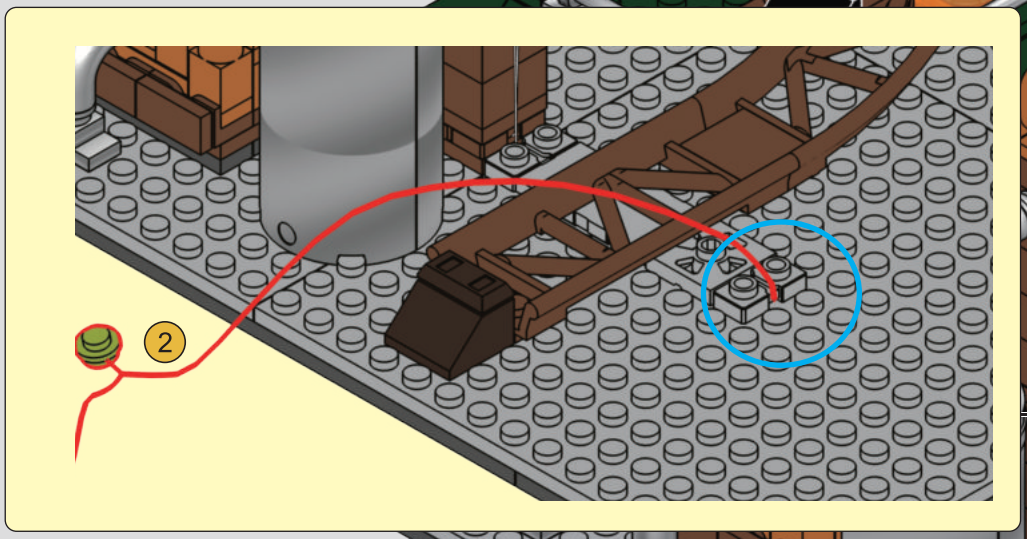

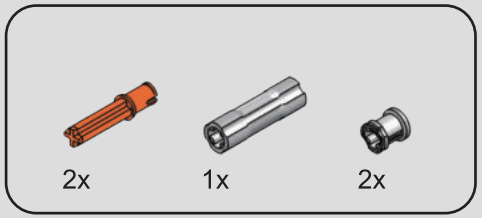

179

1

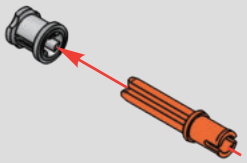

2

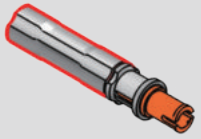

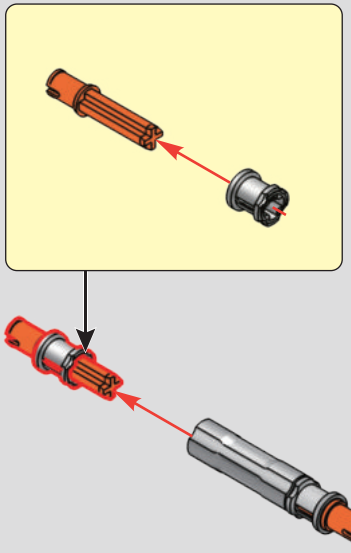

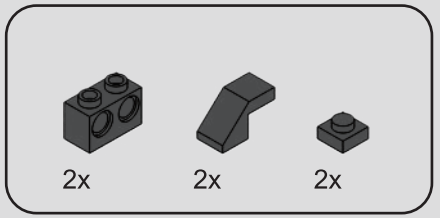

180

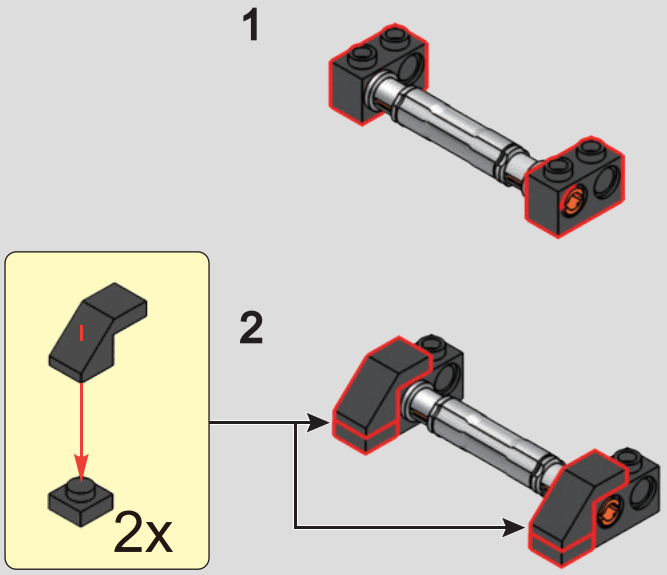

181

1



2



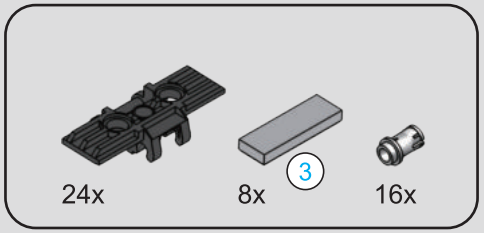

182

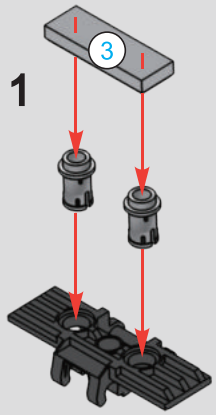

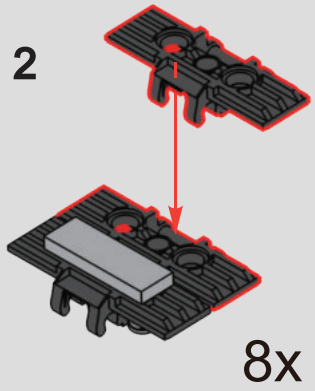

183

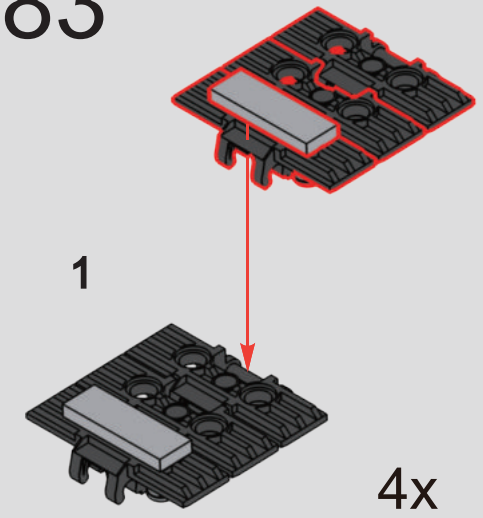

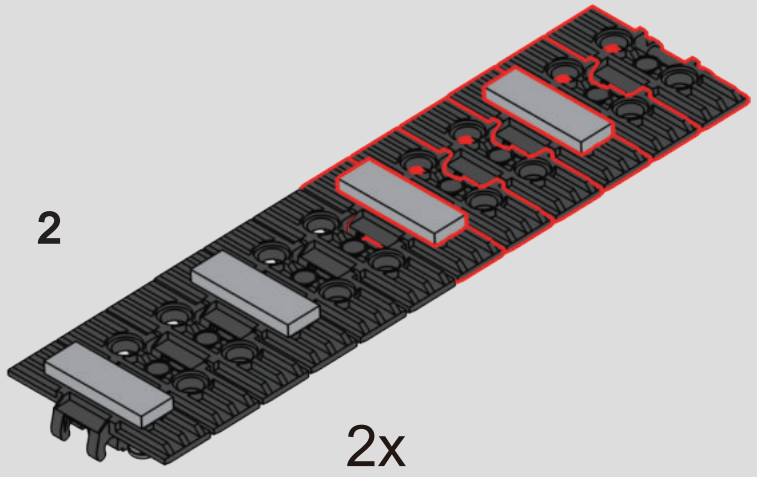

184

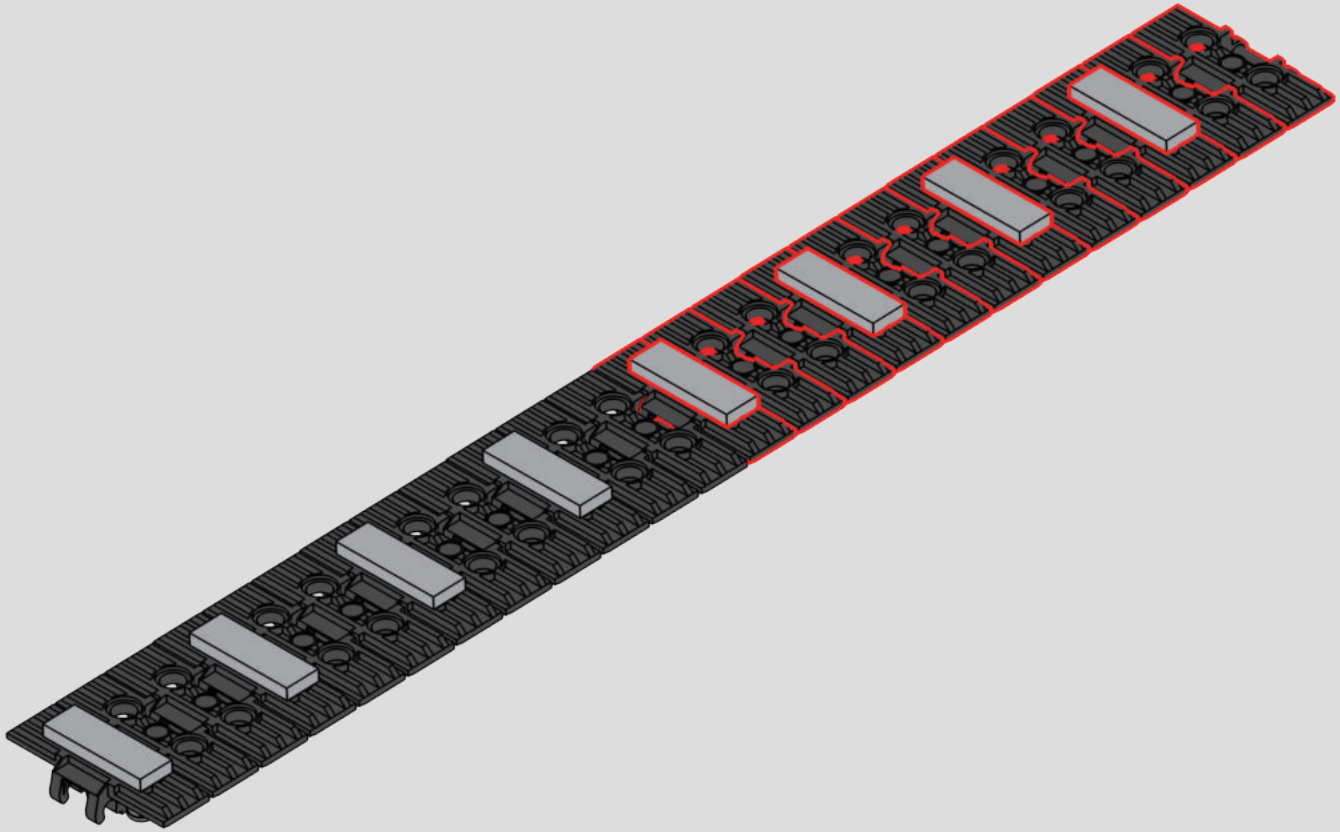

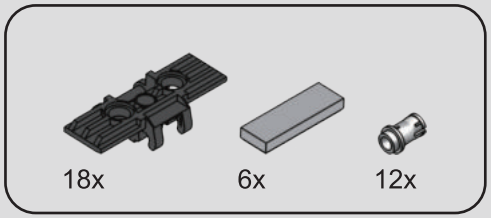

185

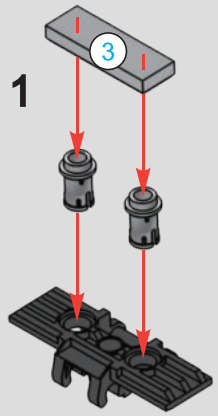

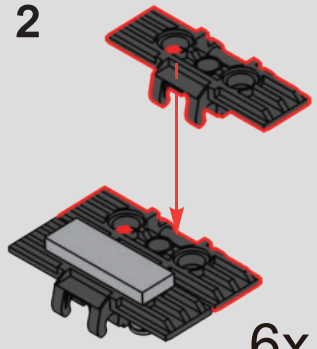

186

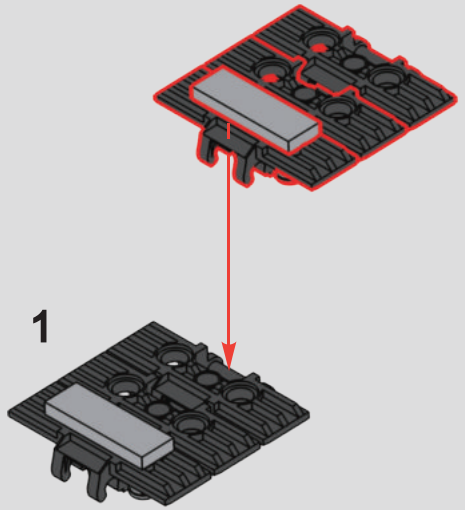

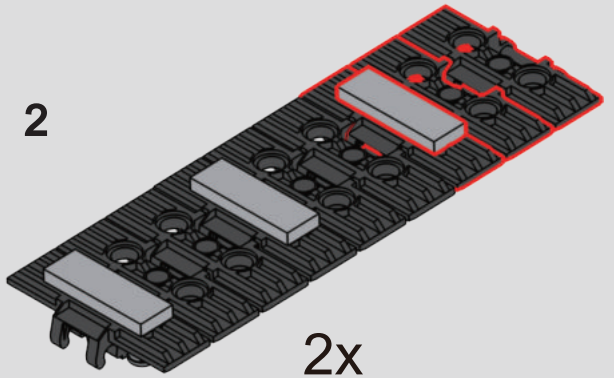

187

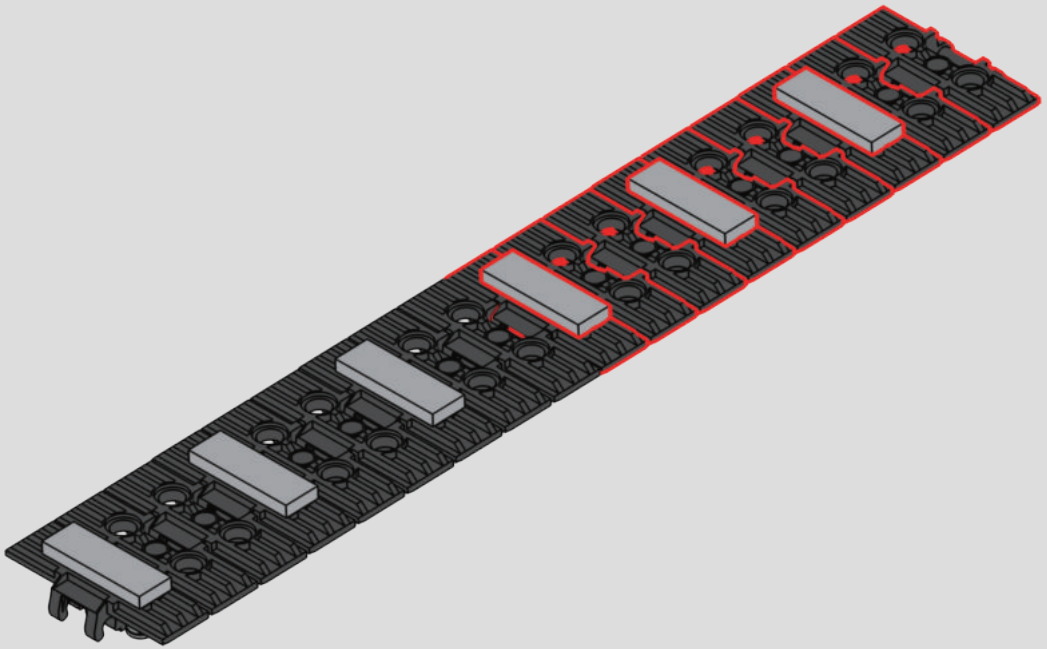

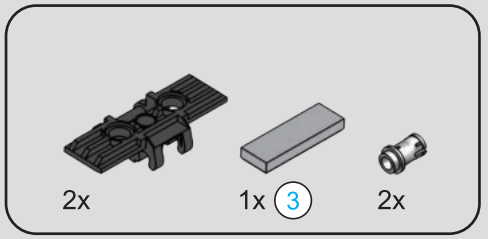

188

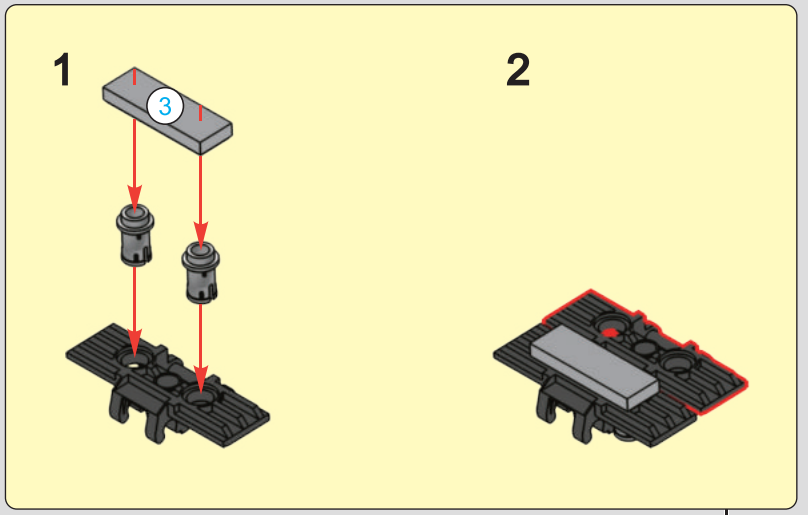

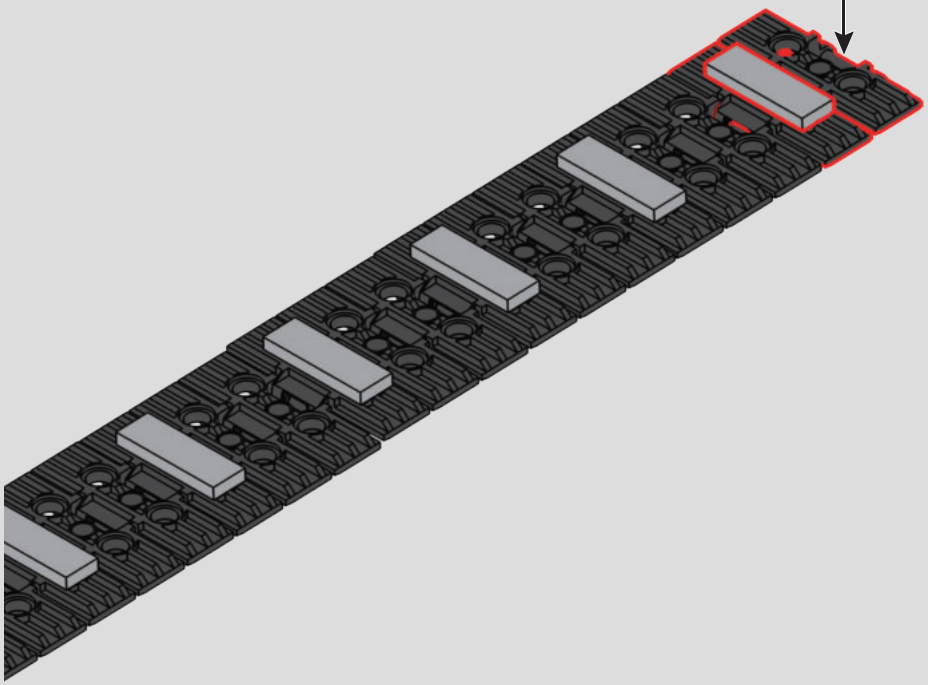

189

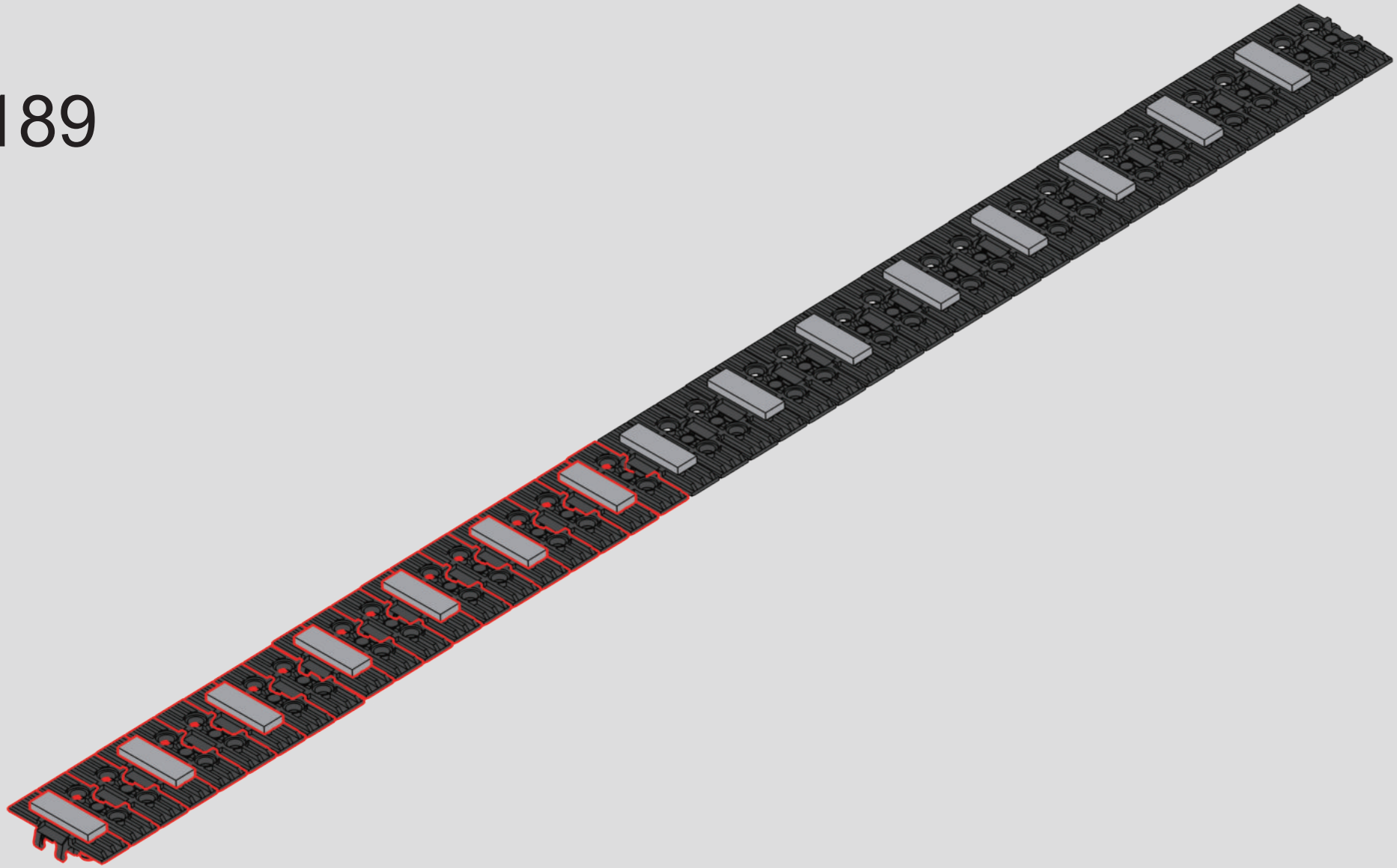

190




13
F

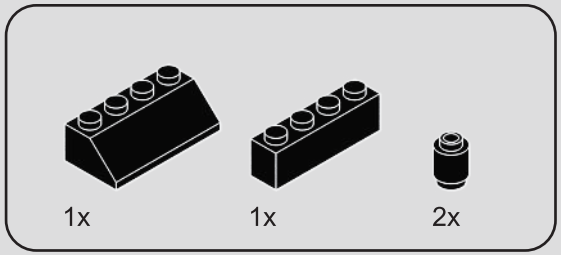

191

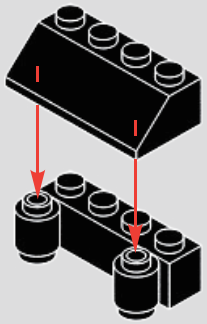

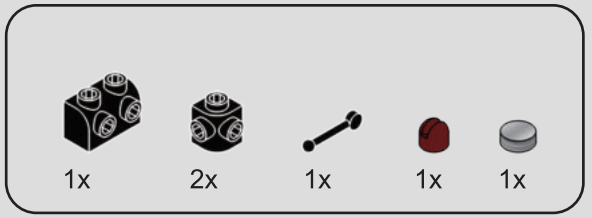

192

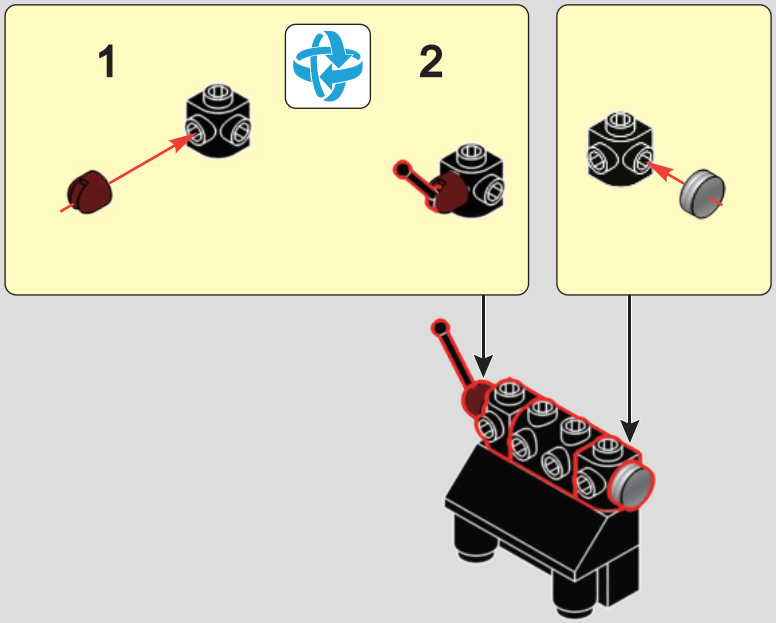

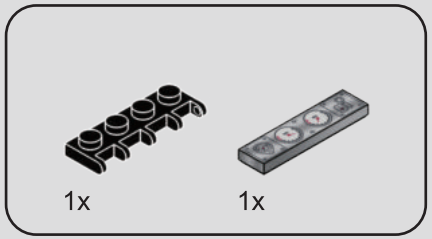

193

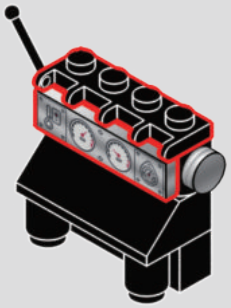

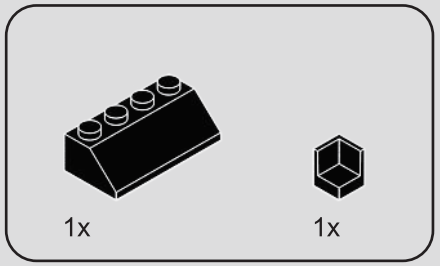

194

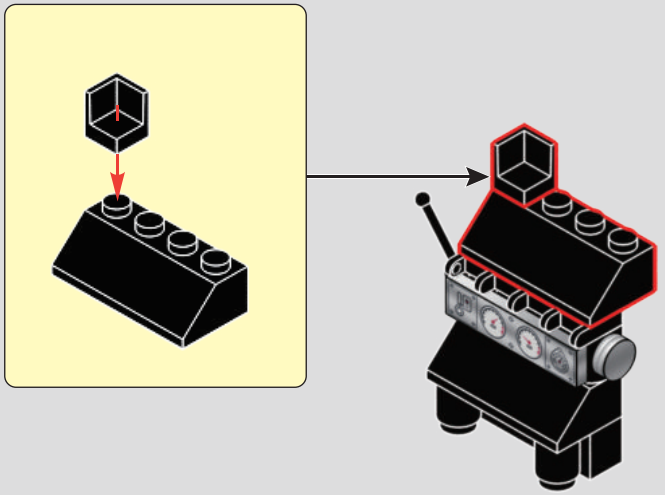

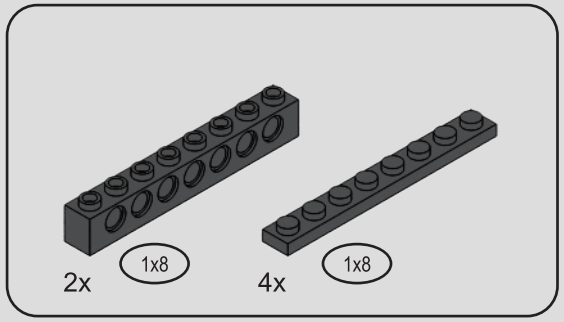

195

1

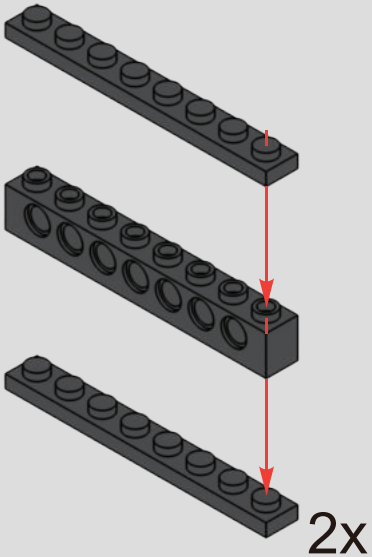

2

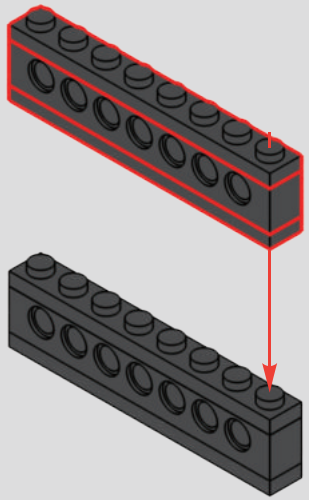

196

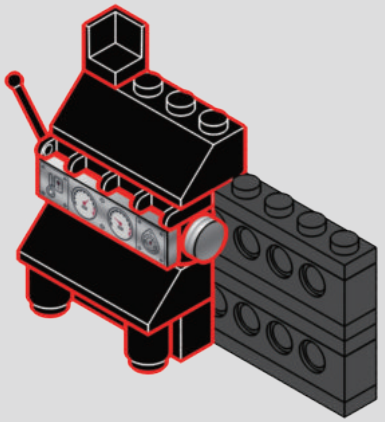

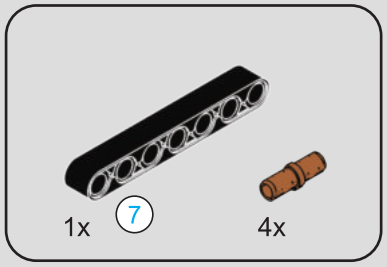

197

1

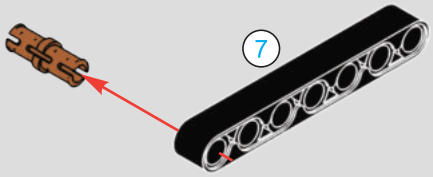

2





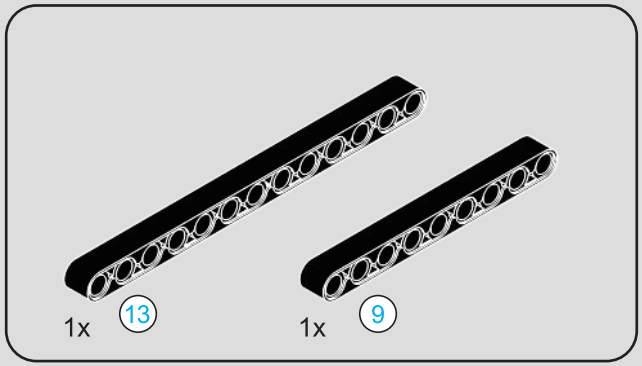

198

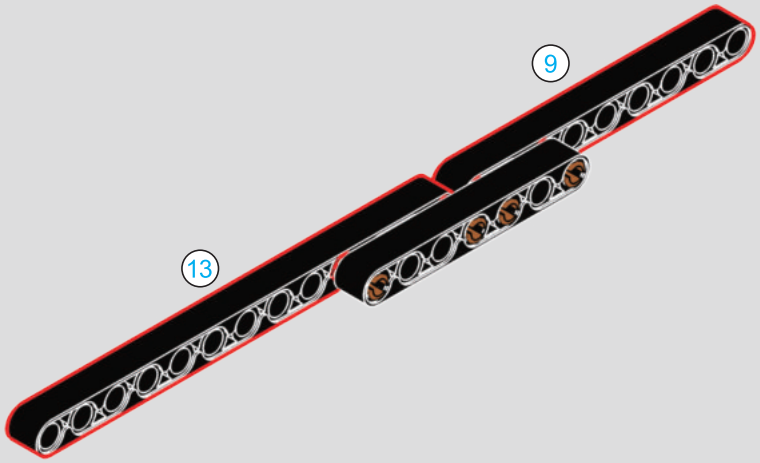





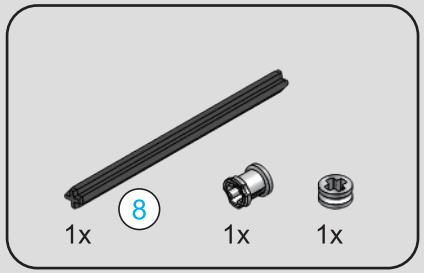

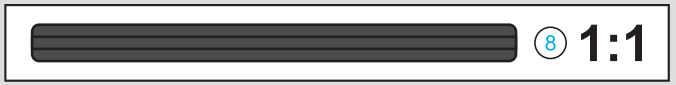

199

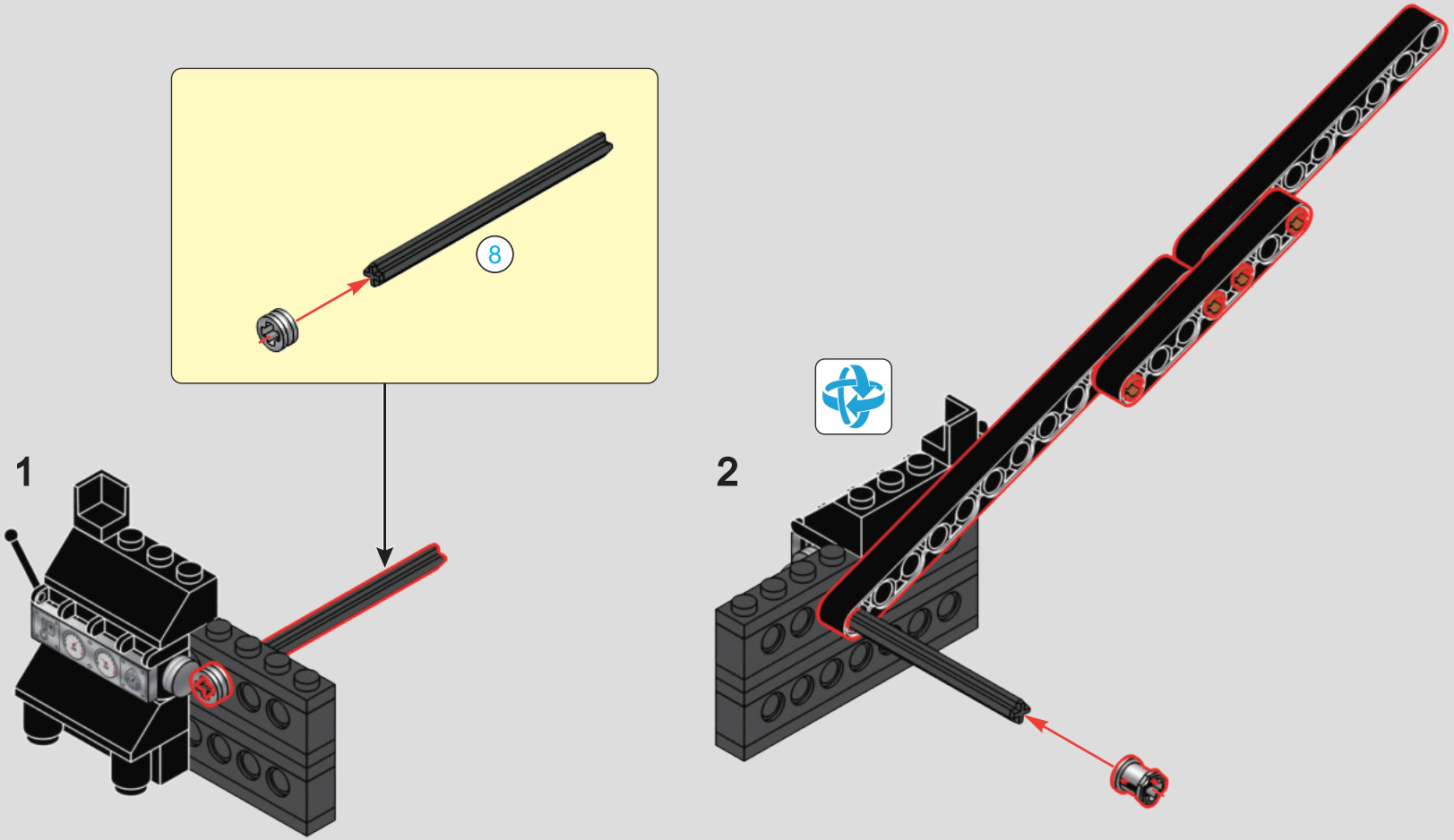

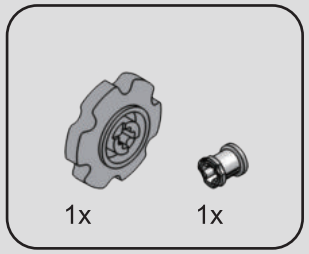

200

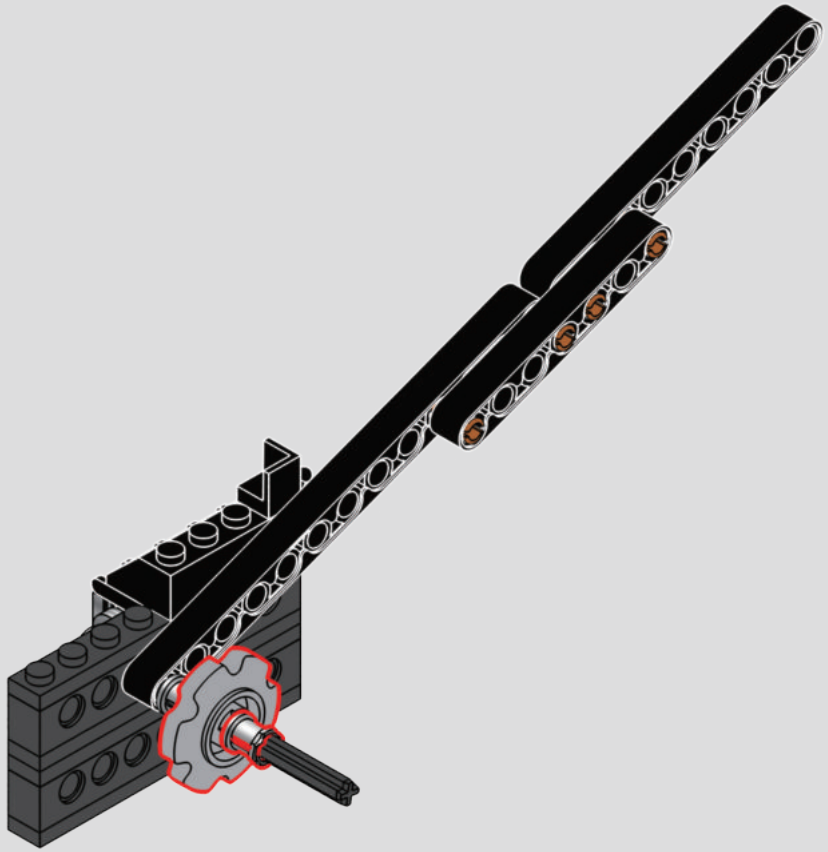

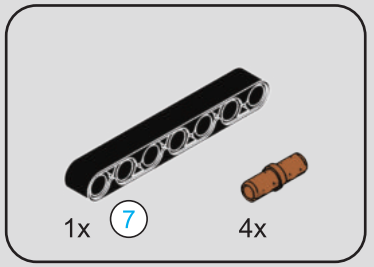

201

1

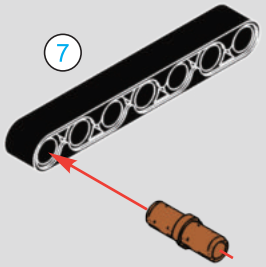

2

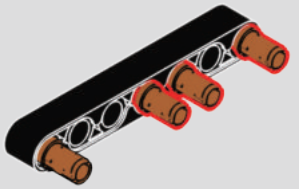



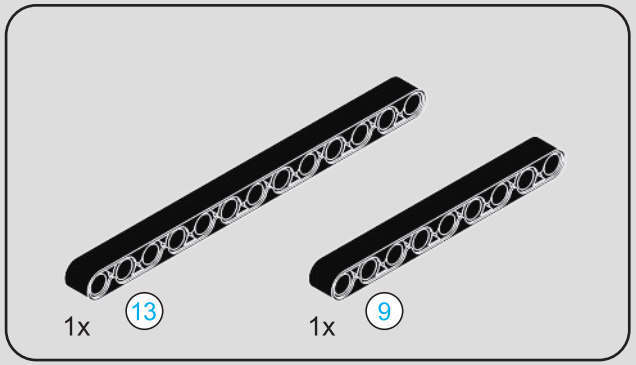

202

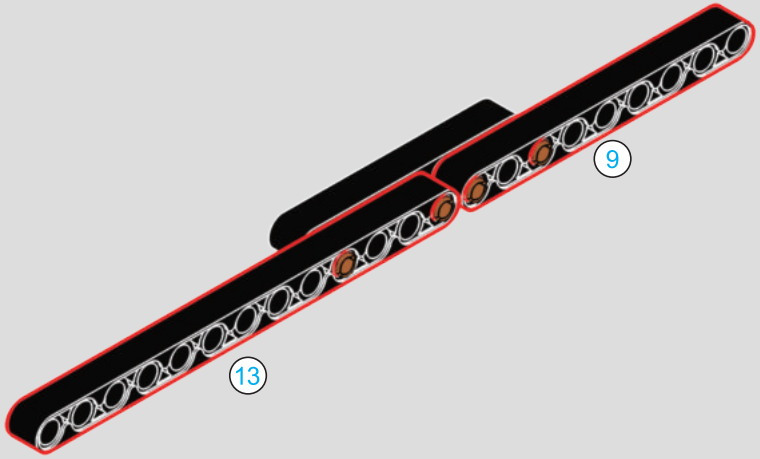

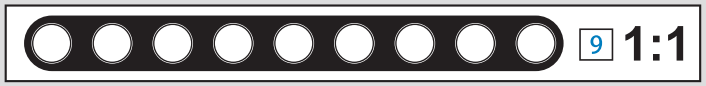



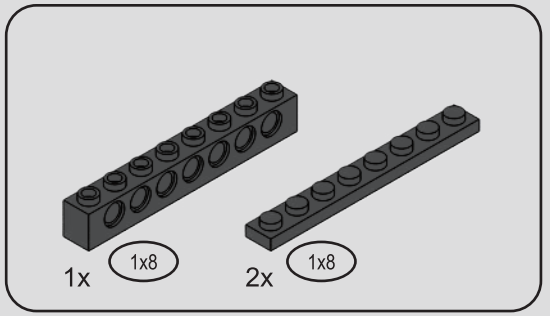

203

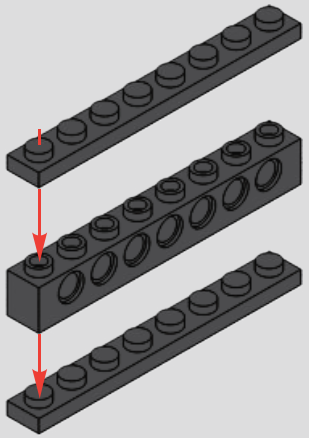

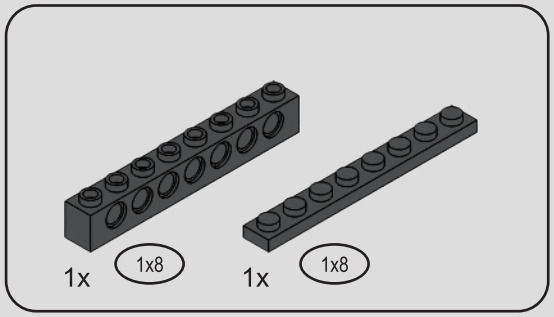

204

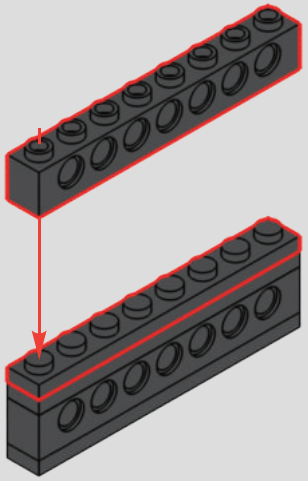

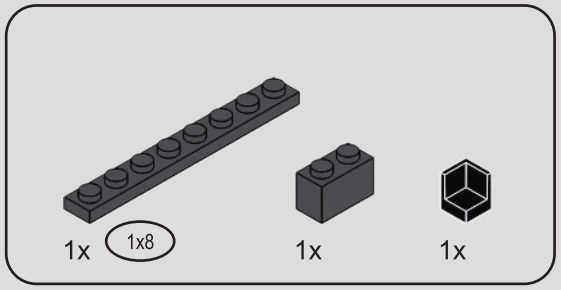

205

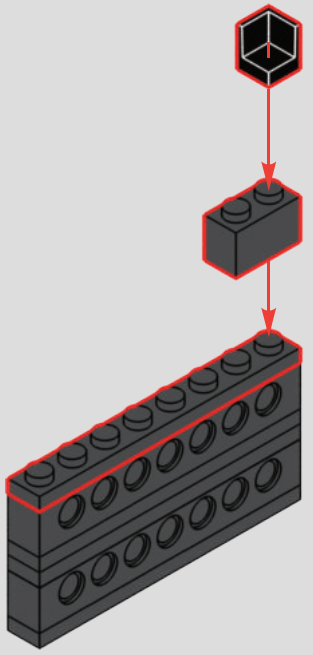

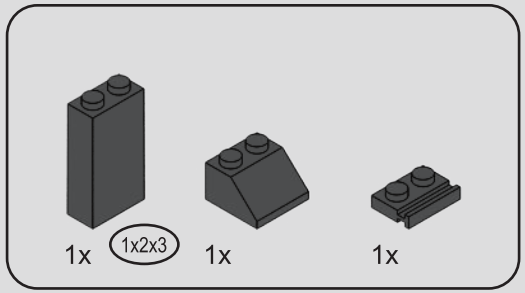

206

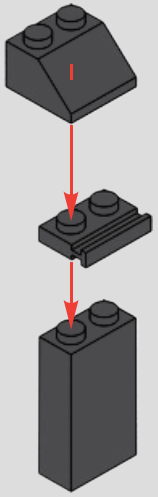

207

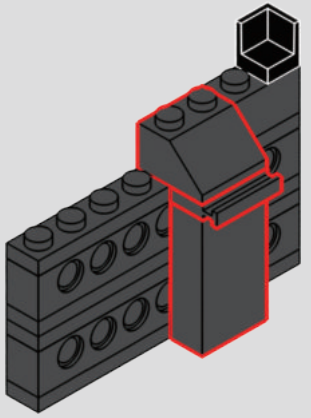

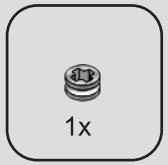

208

1

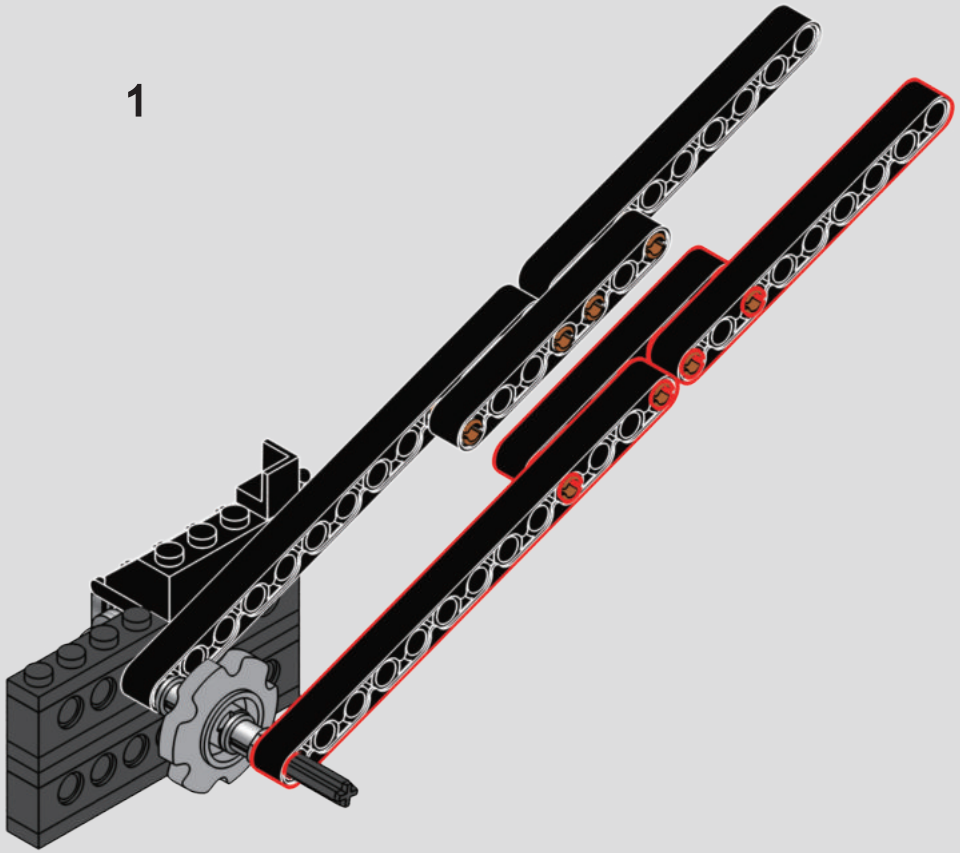

2

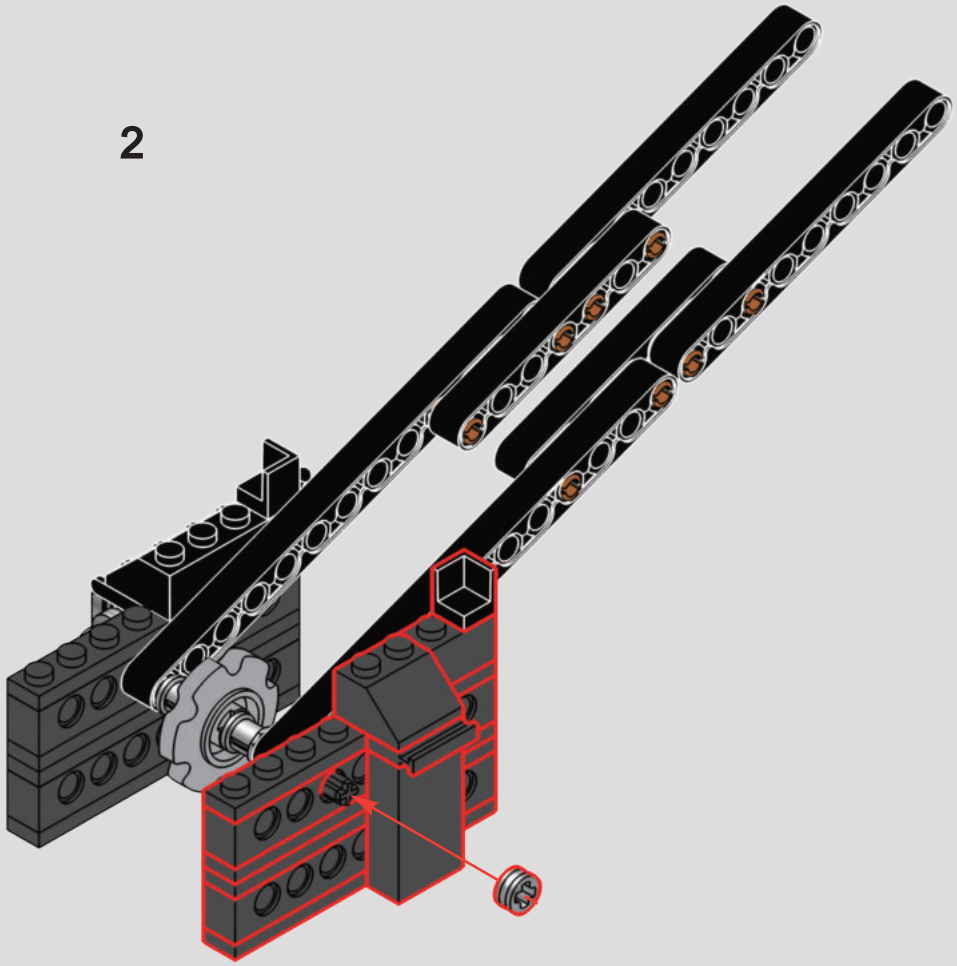

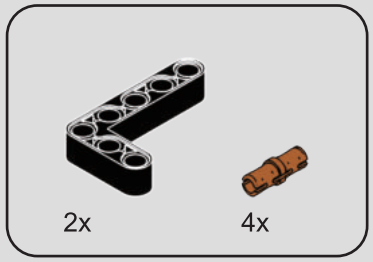

209

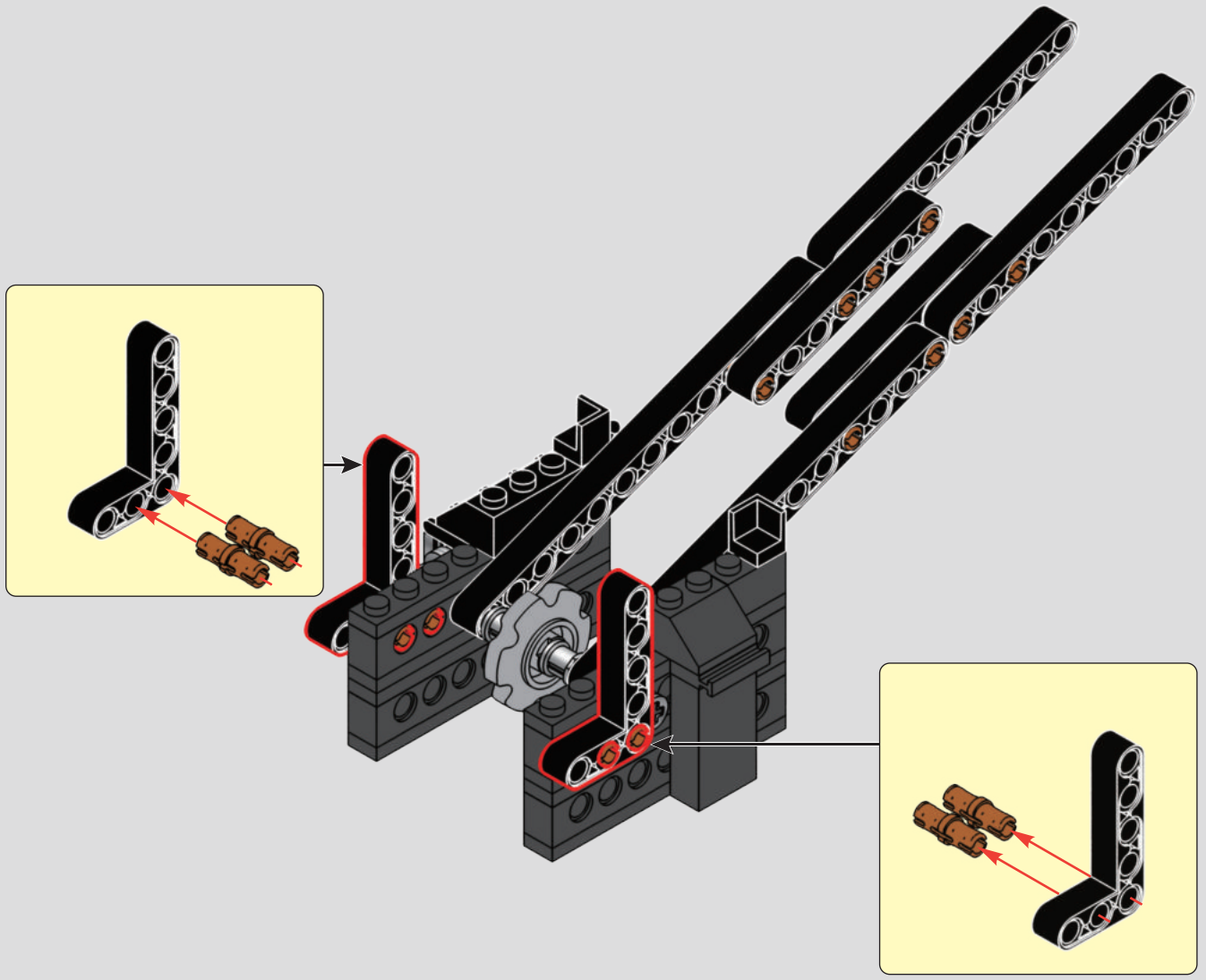

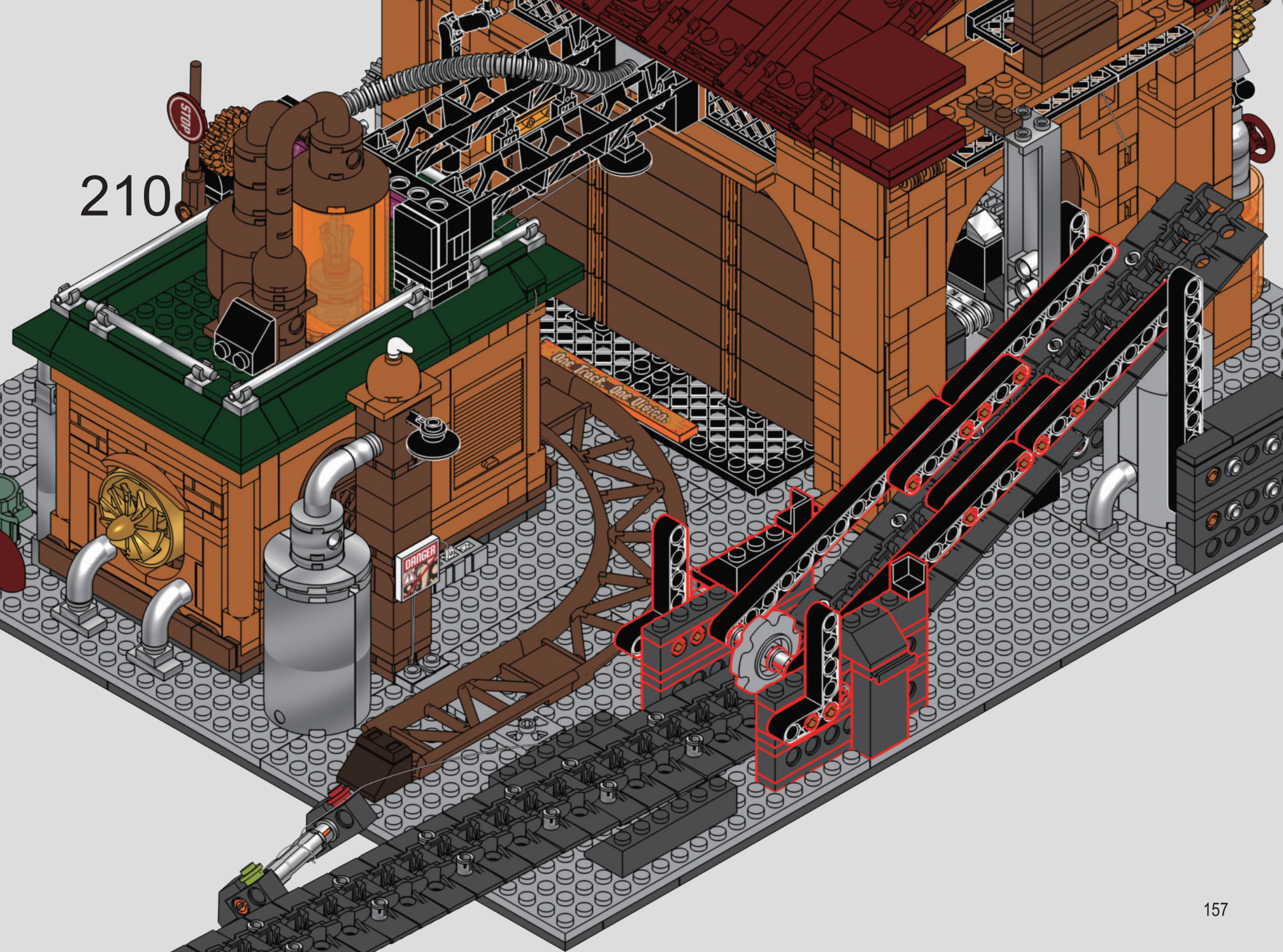
210
STOP
DANGER
One Track. One Vision.

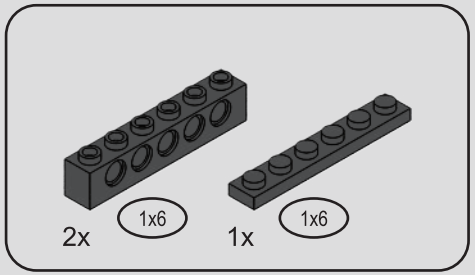

211

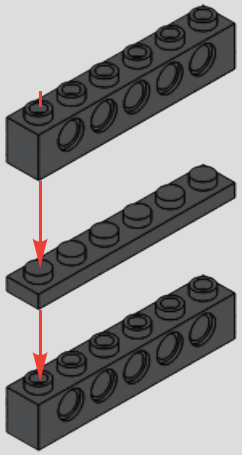

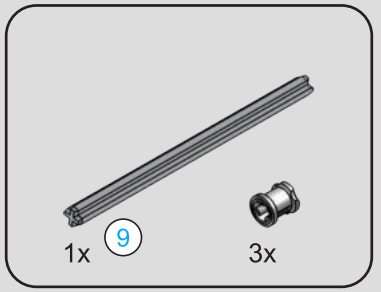

212

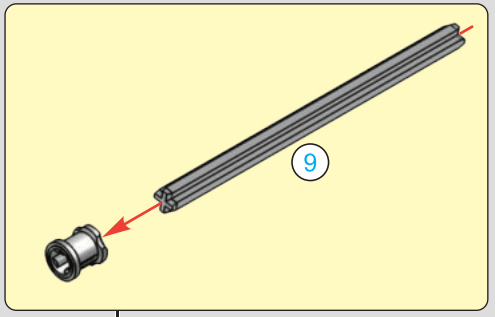

1

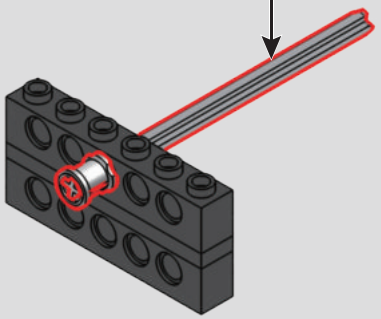

2

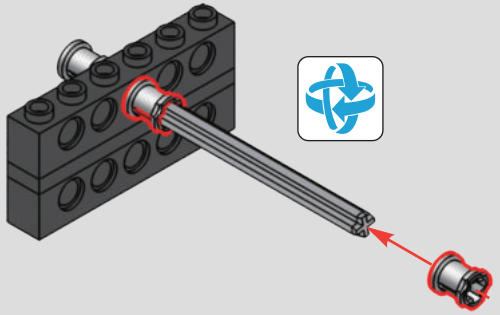

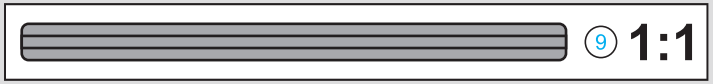

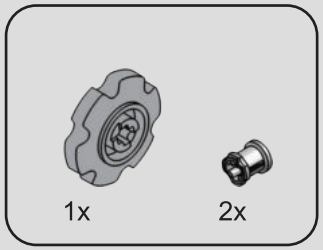

213

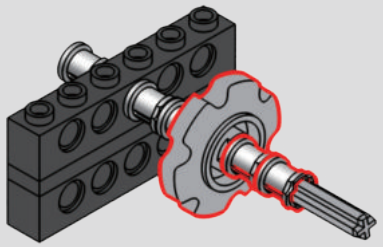

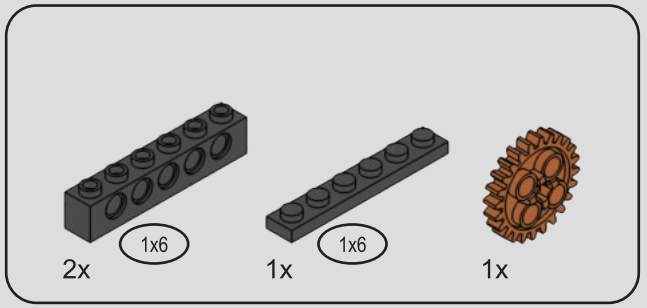

214

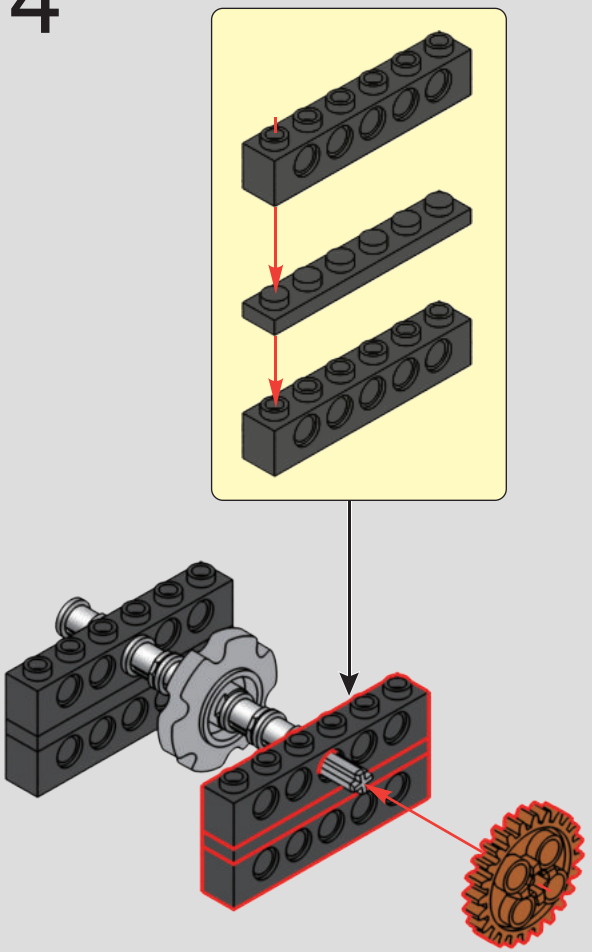



215

1

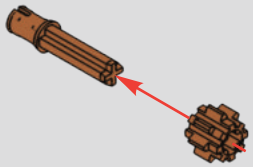

2



216

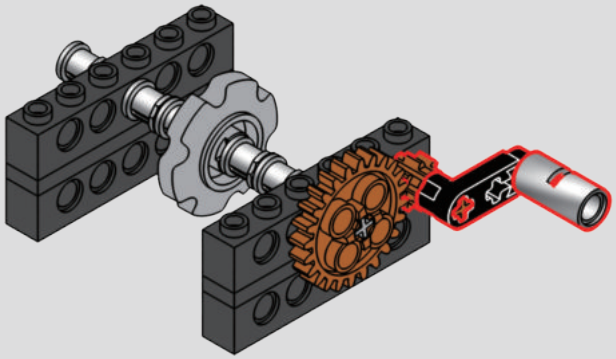


217
STOP
DANGER


2x
1x12
2x
2x
218
DANGER


2x
219
STOP
One Track. One Vision.
DANGER

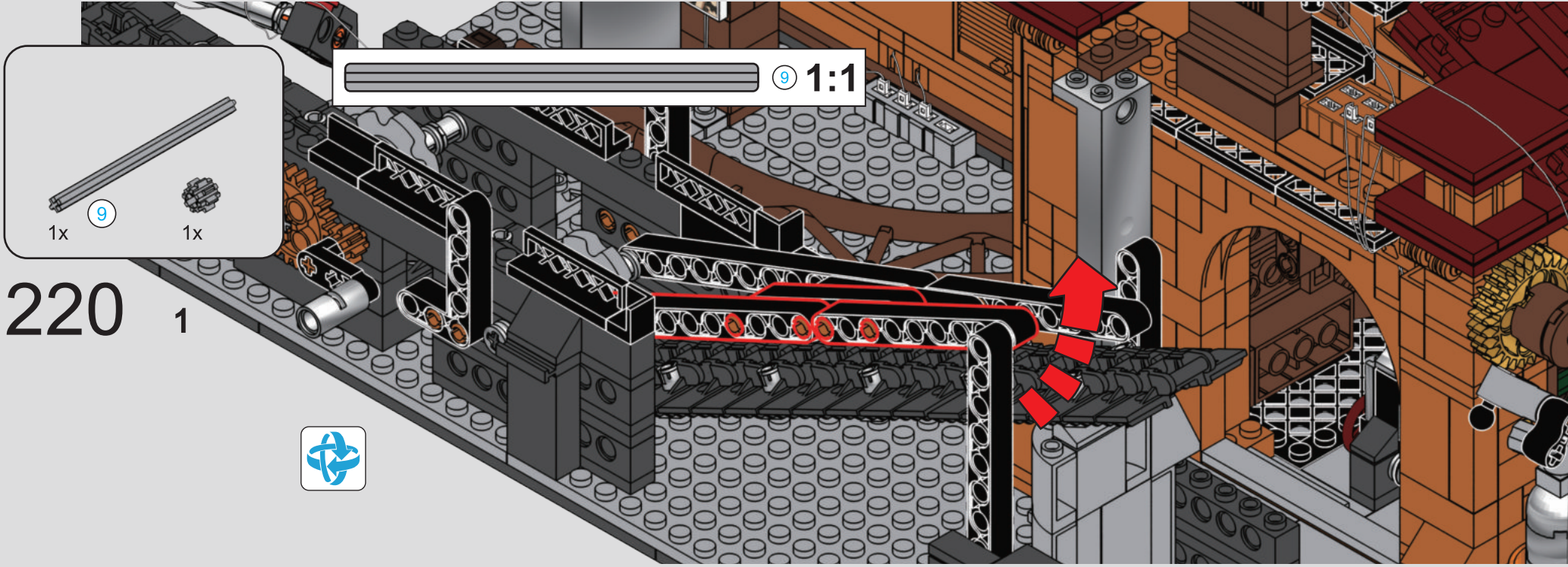

220

1

2

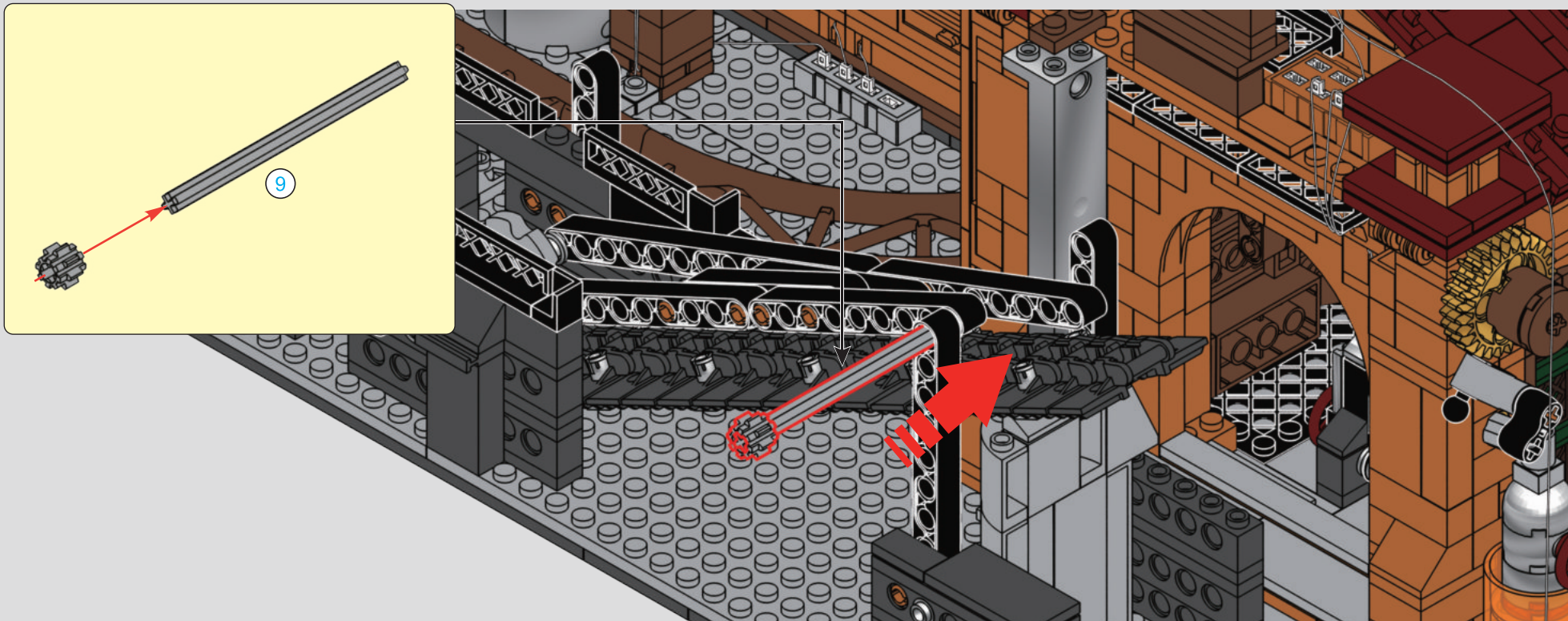


1x
2x
221
DANGER

222

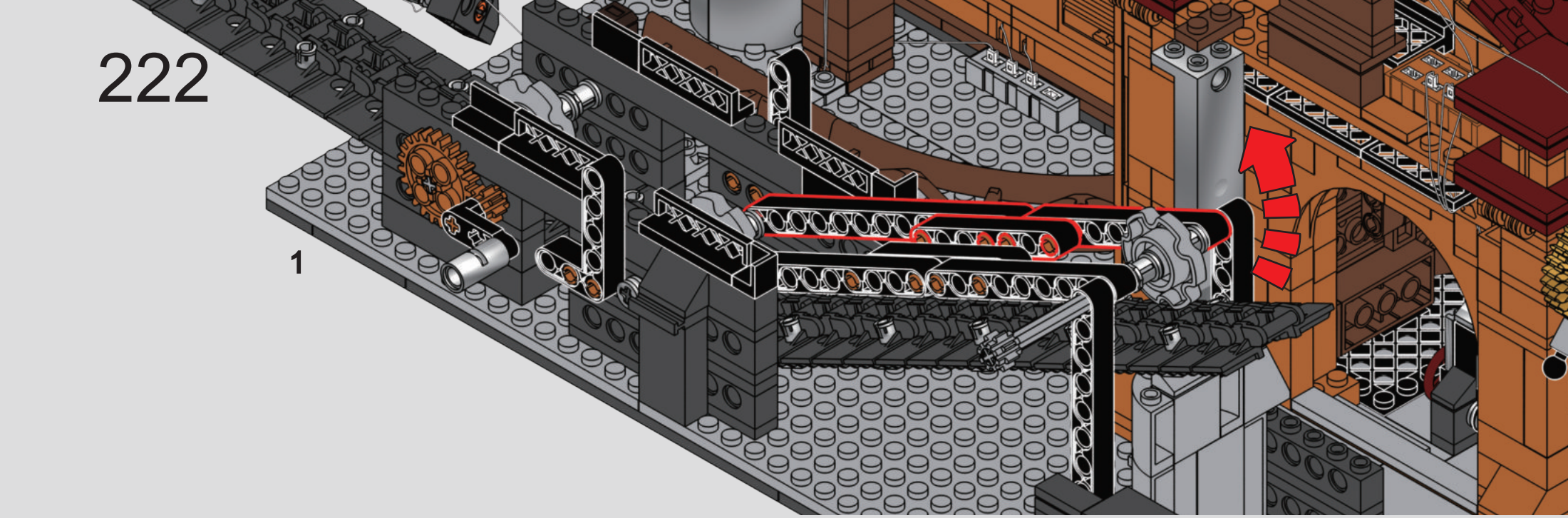

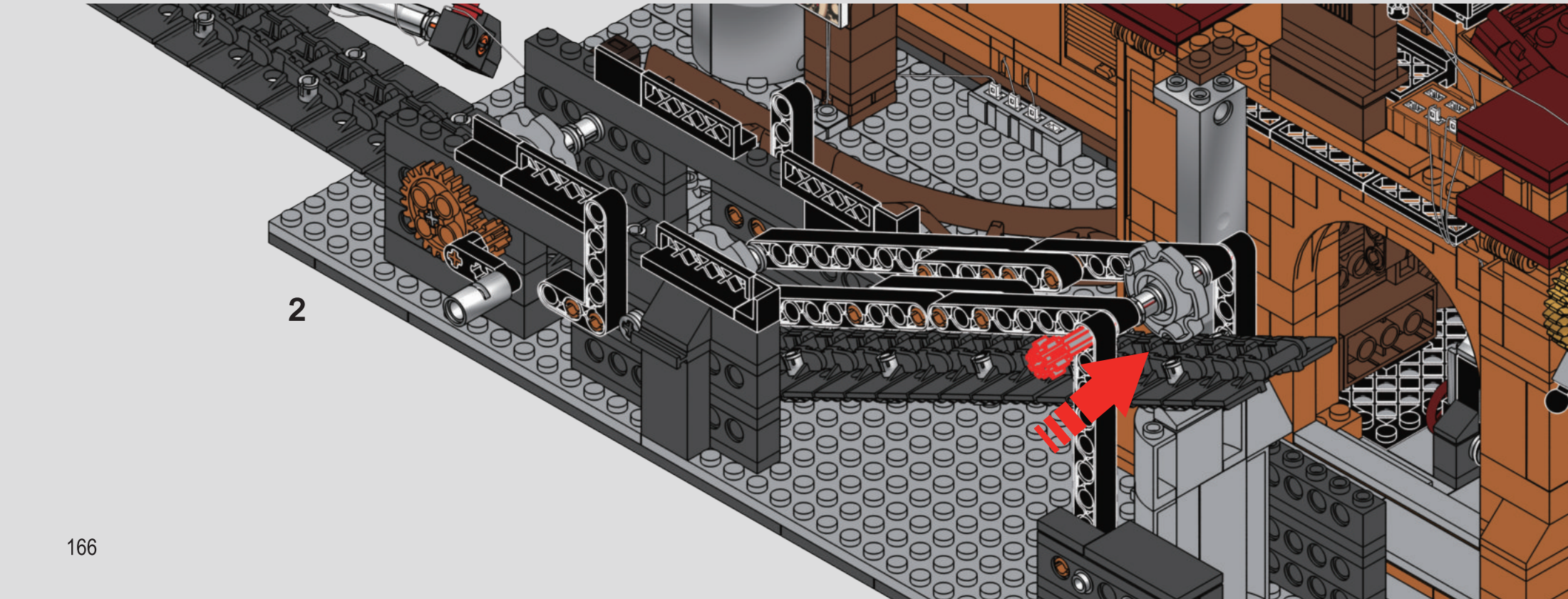

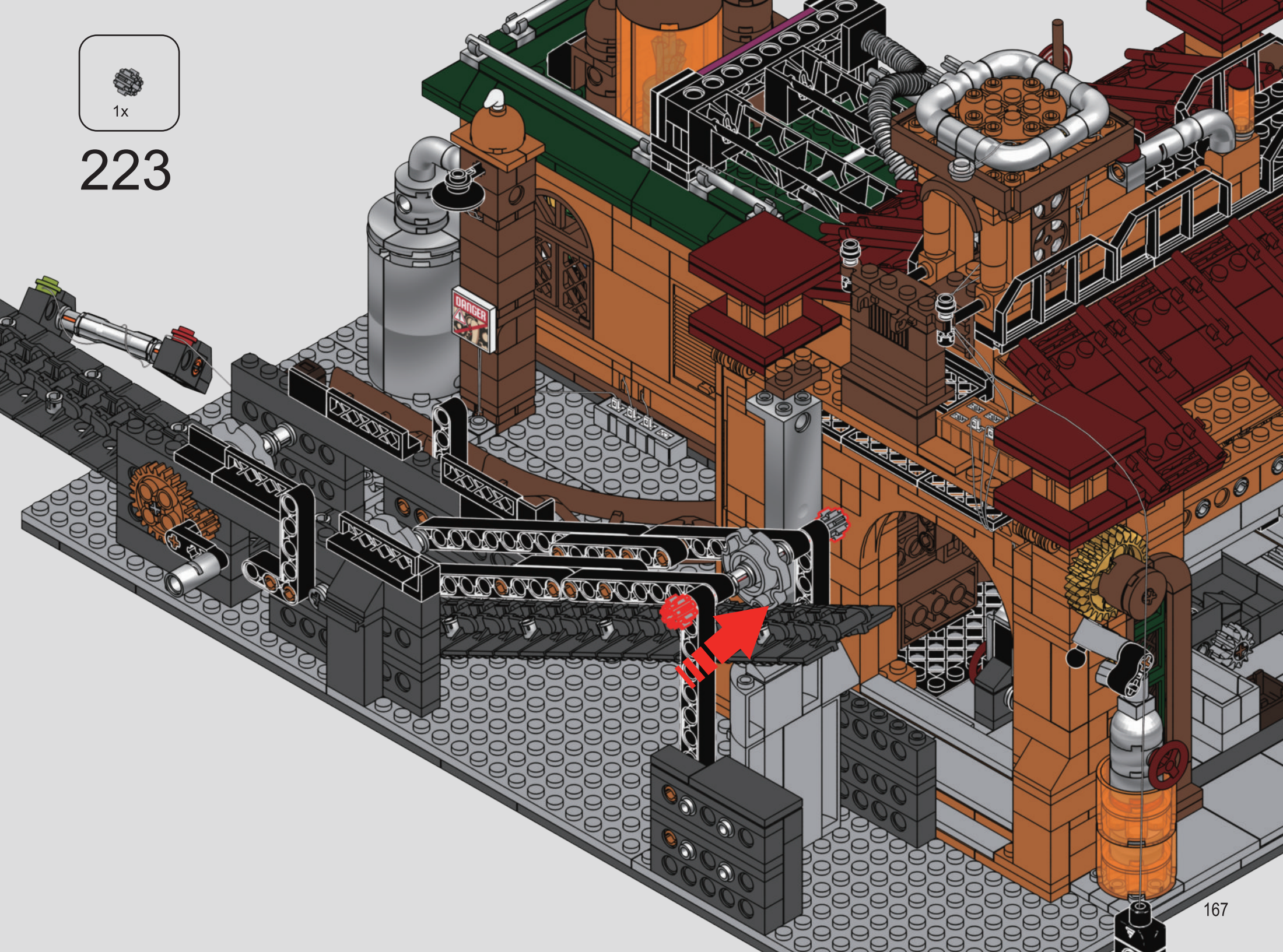
1x
223
DANGER

224

1

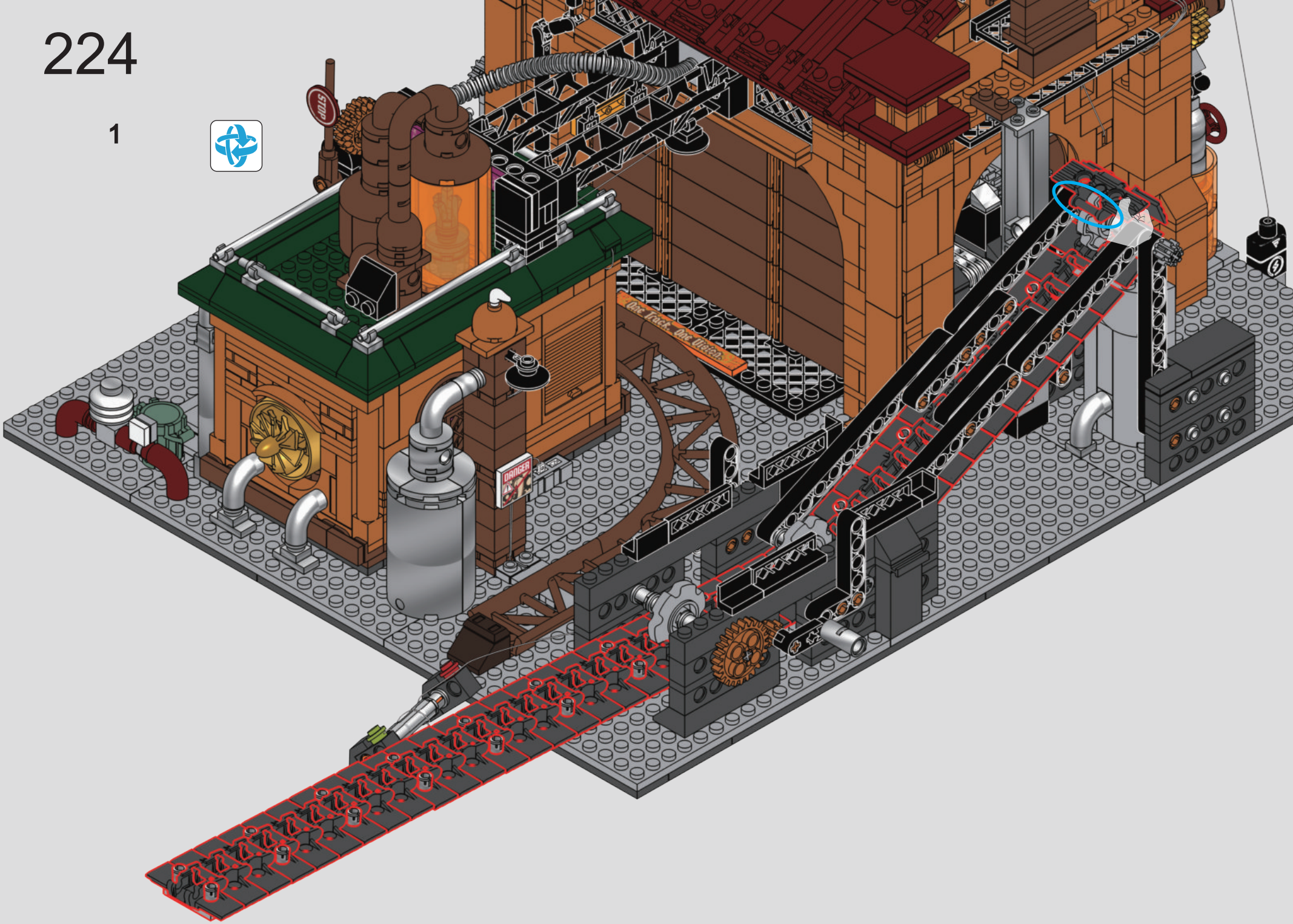

2

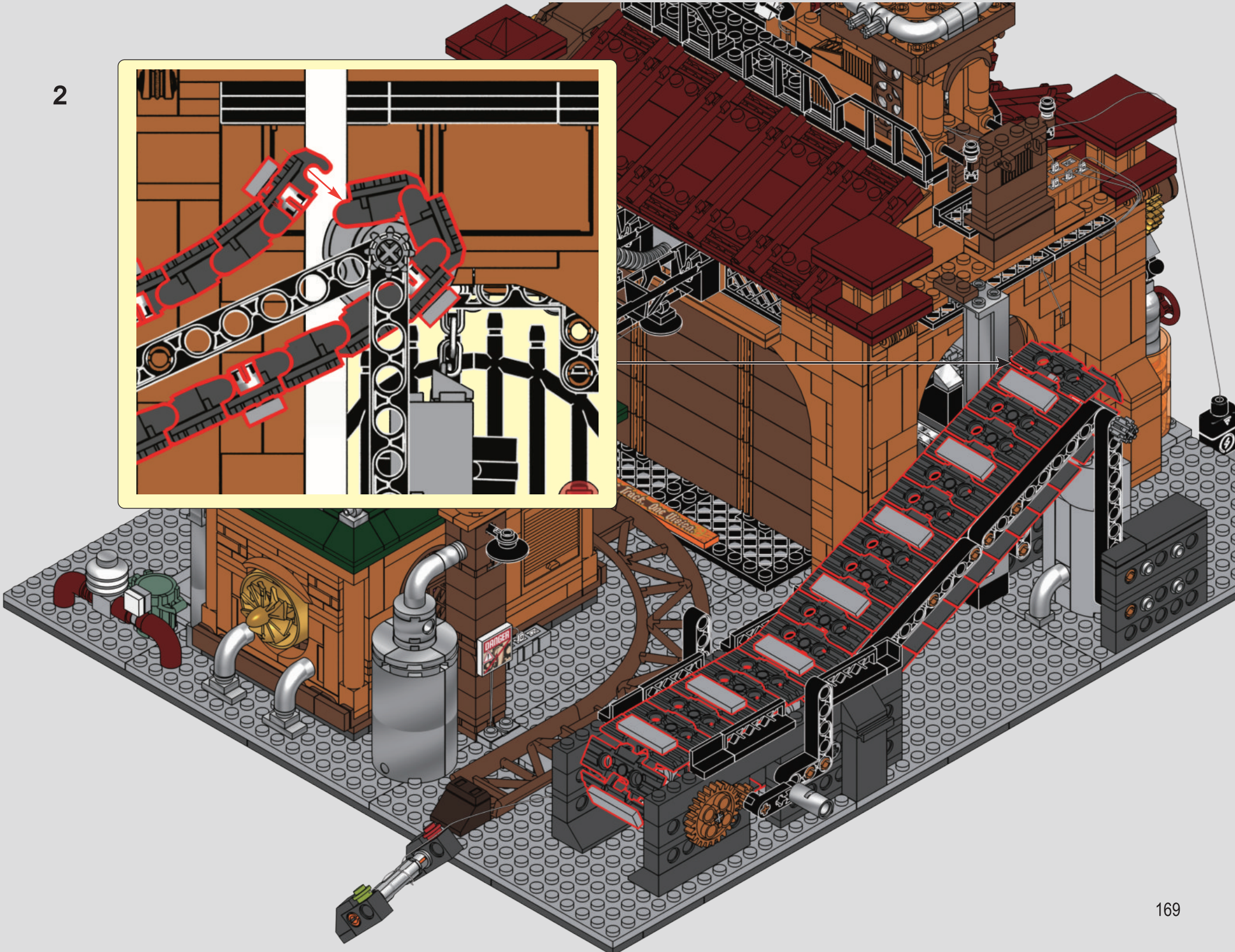

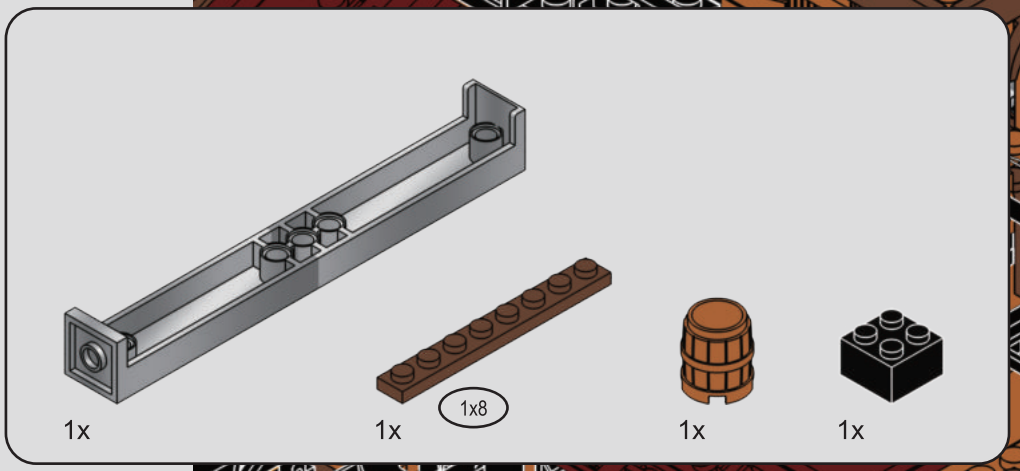

225


2x
2x
226
2x
STOP
DANGER

227

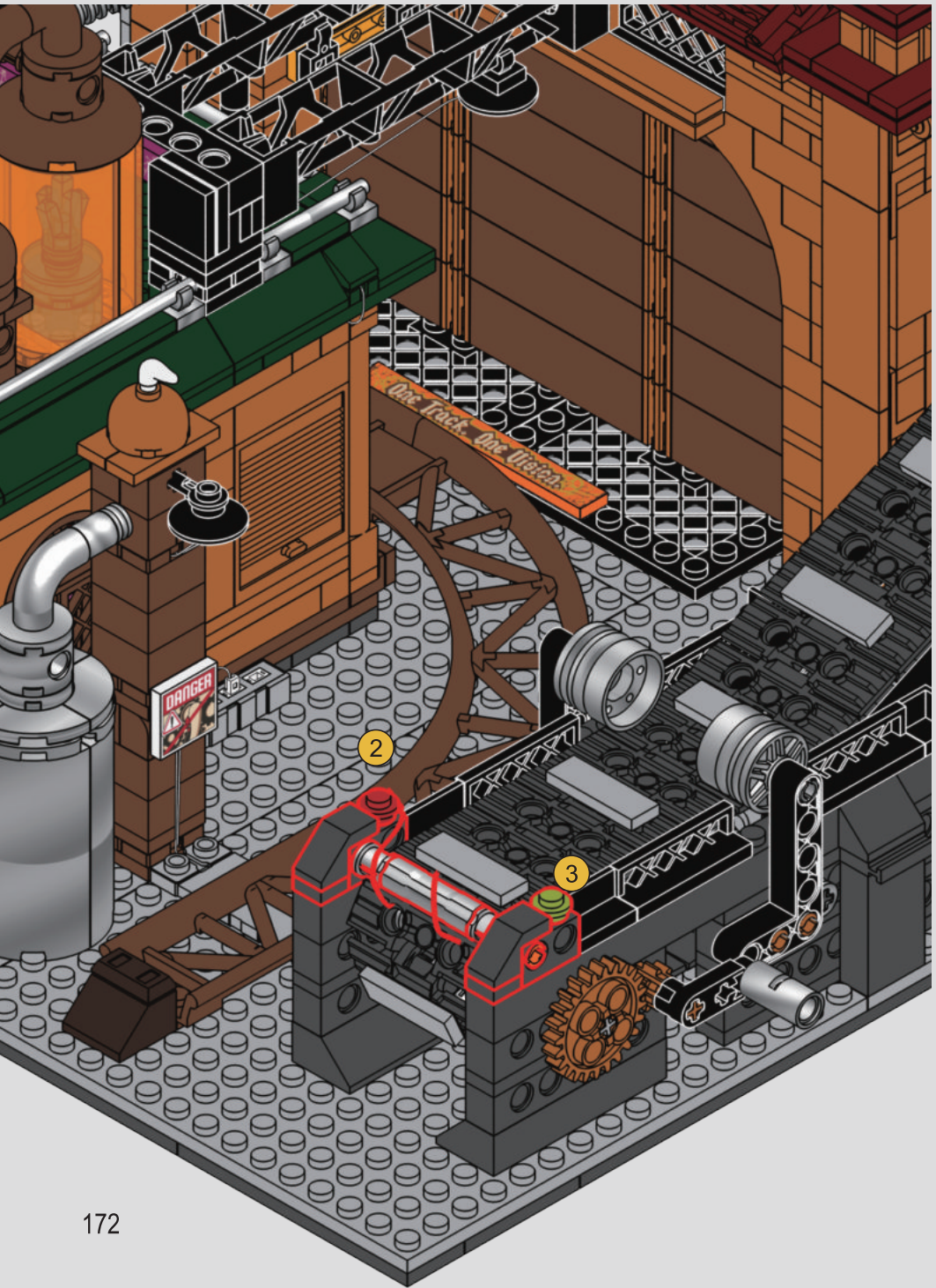

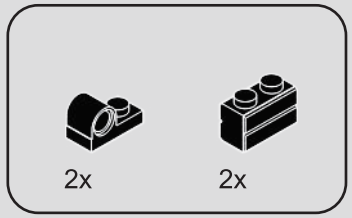

228




1x
2x
229

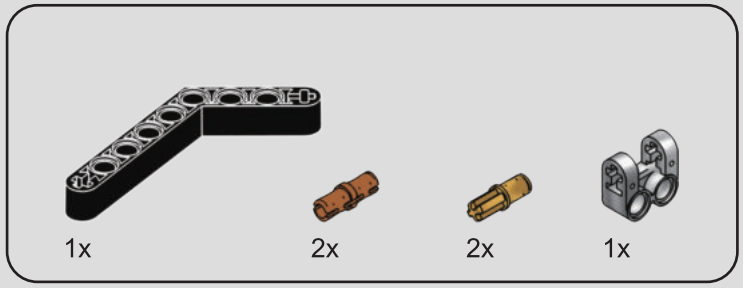

230

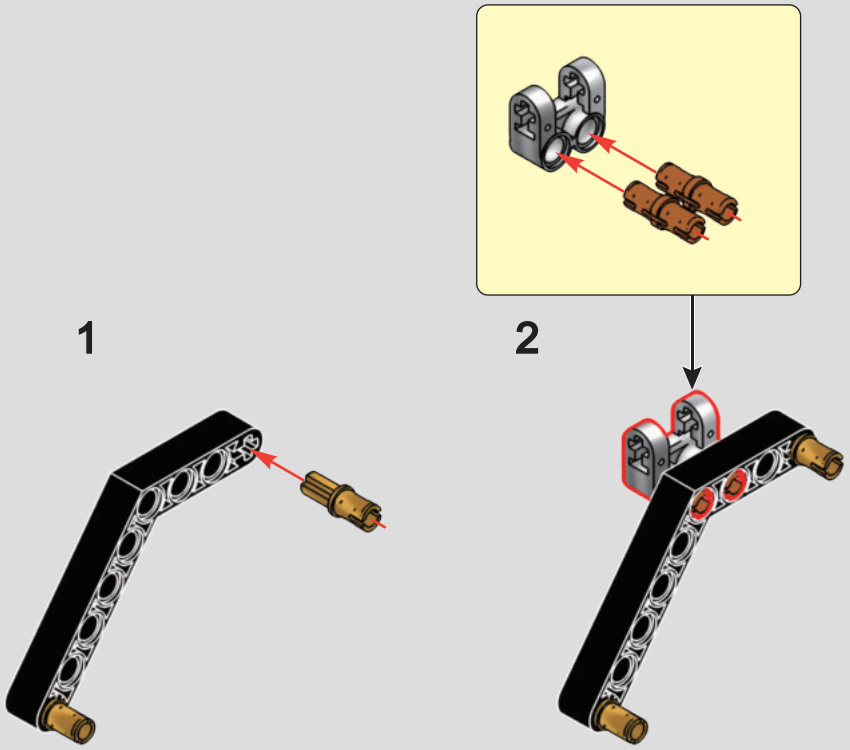

231



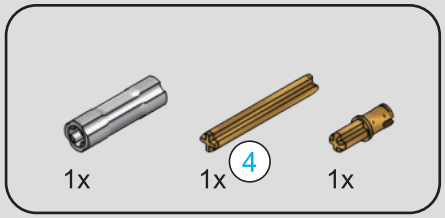



232

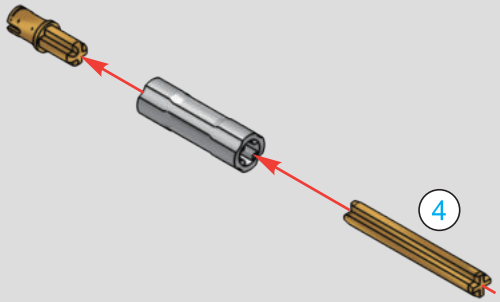

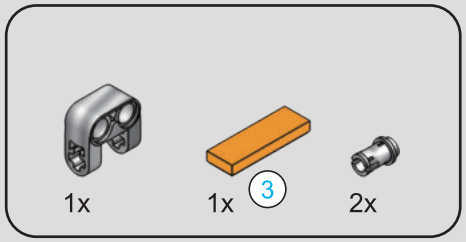

233

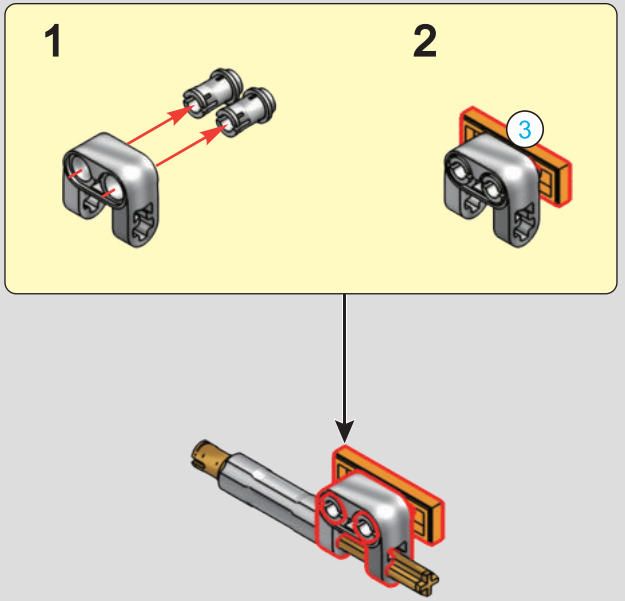

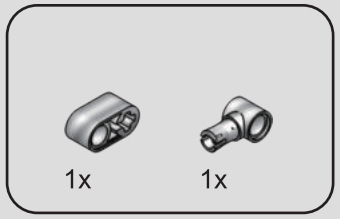

234

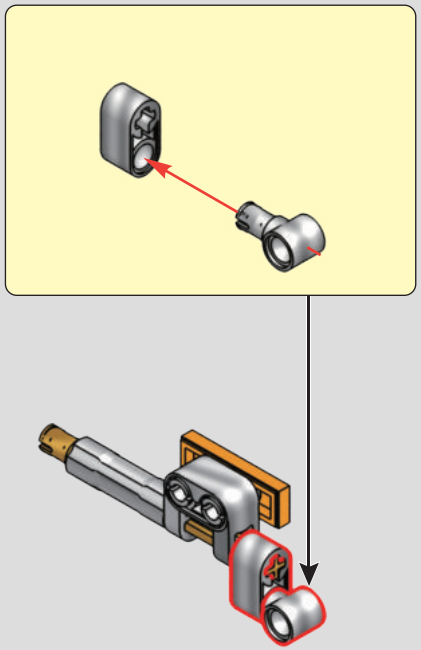

235



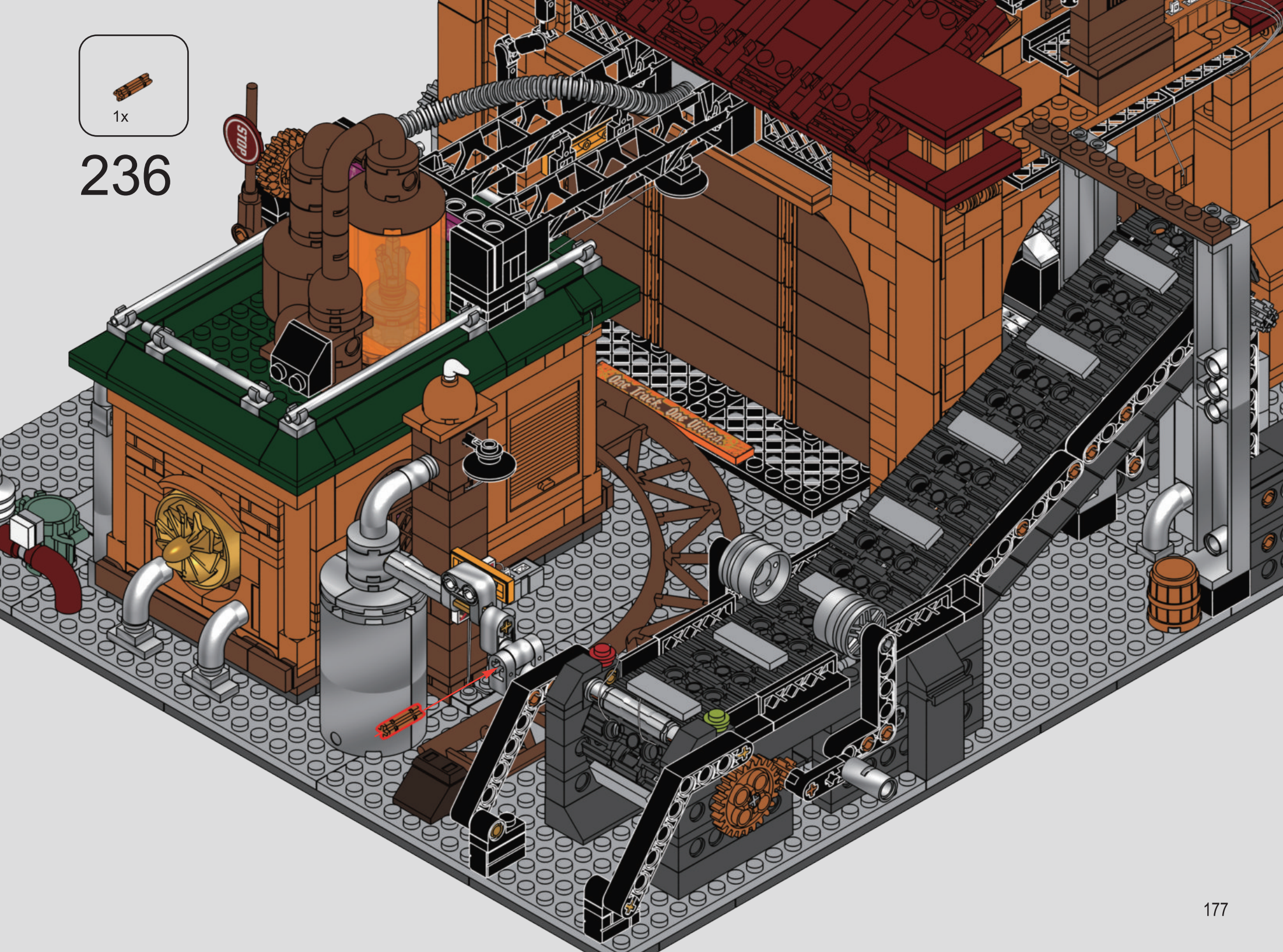
1x
236
STOP
One Track. One Vision.

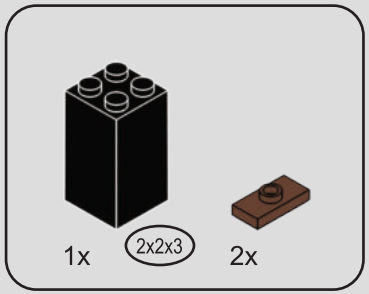

237

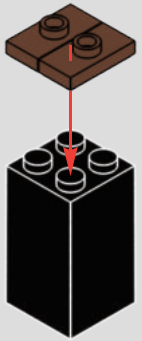

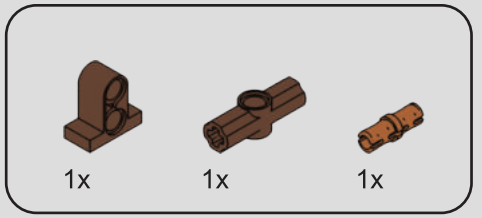

238

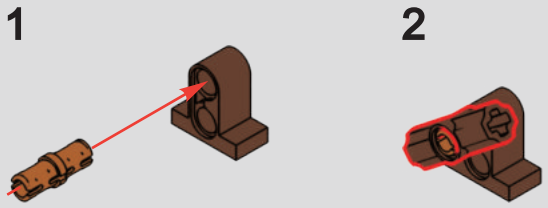

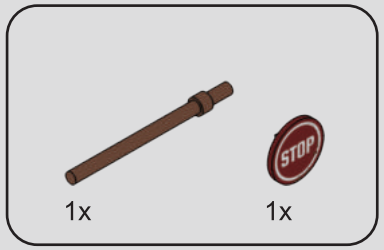

239

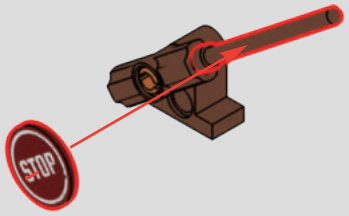

240



241



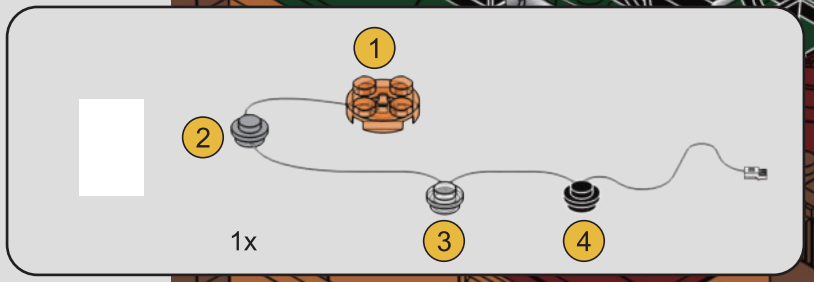

242

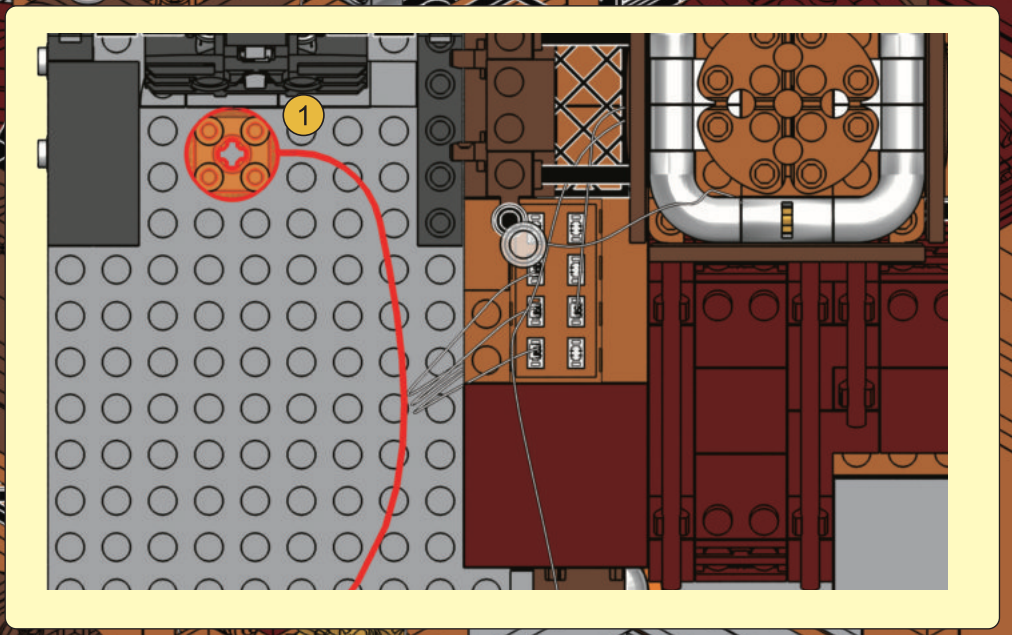



243

1

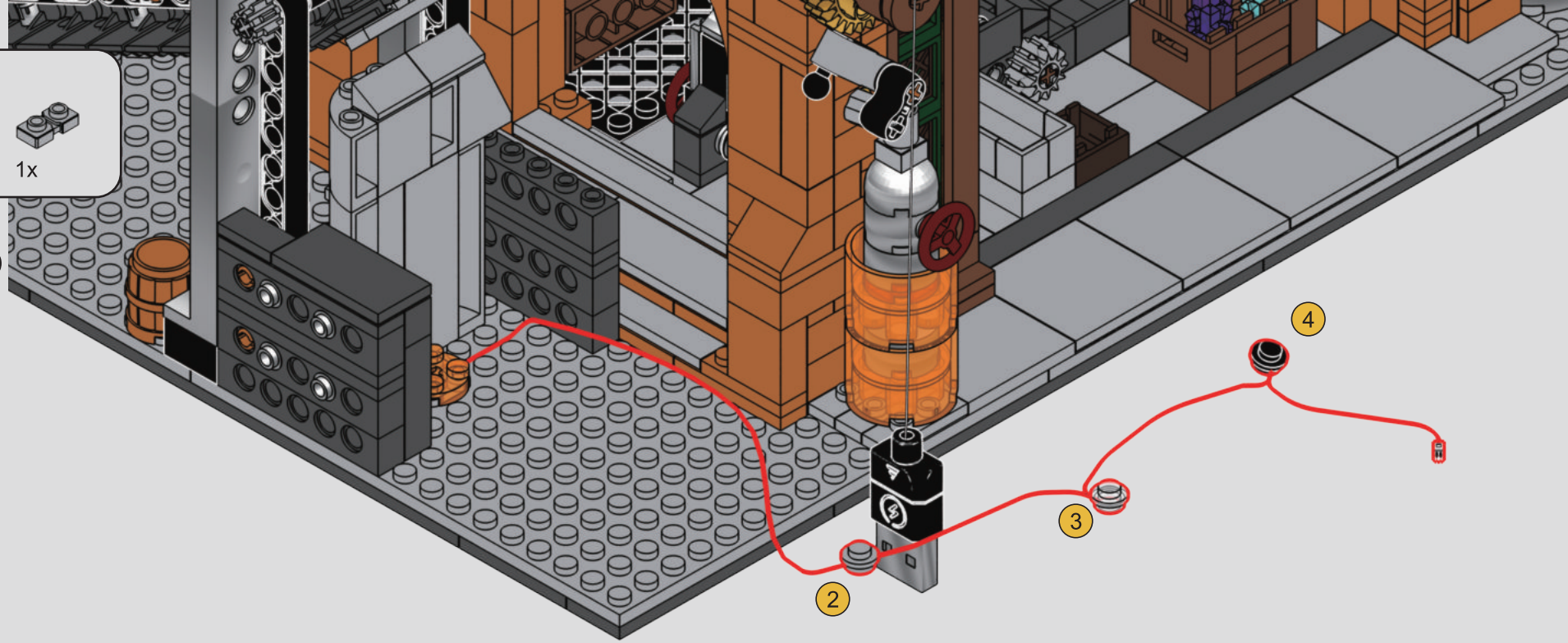

2

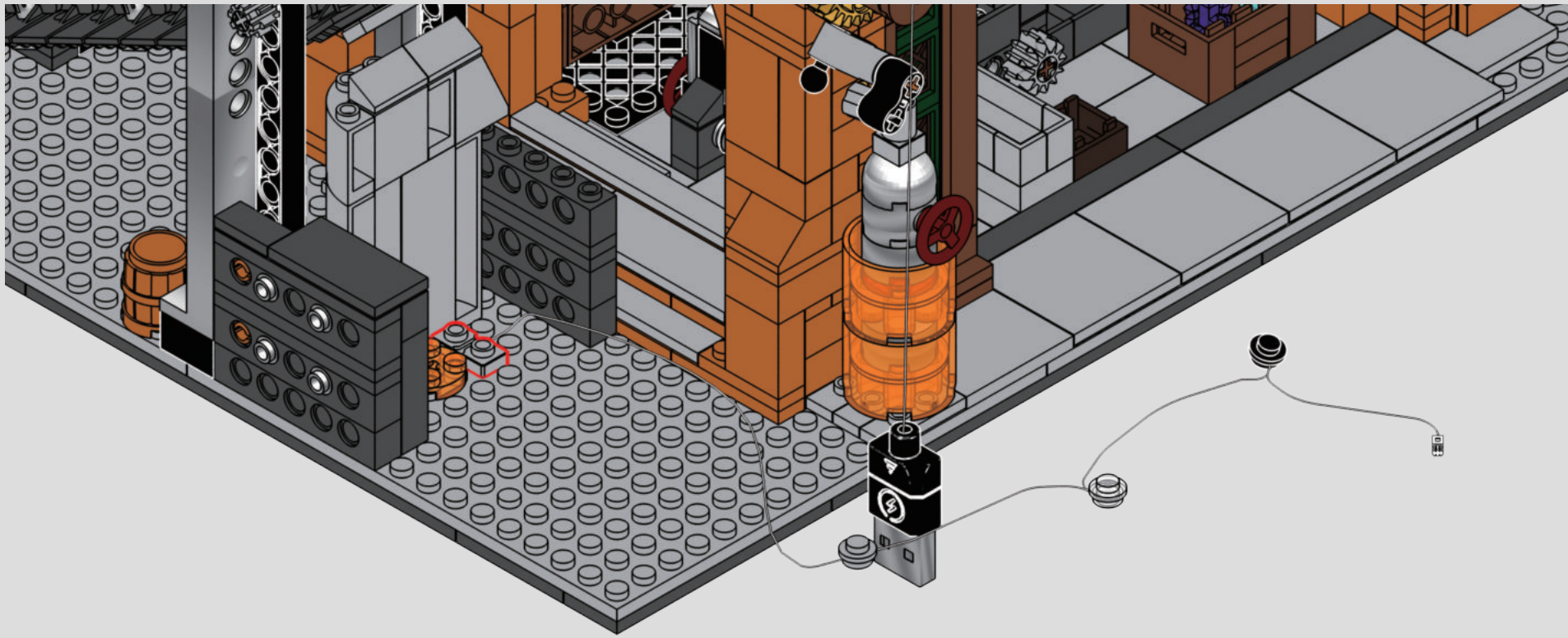


F
1x
1x
1x1x3
1x
244
DANGER

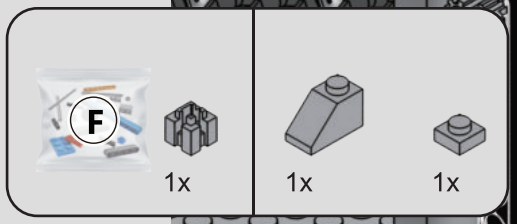

245

1

2

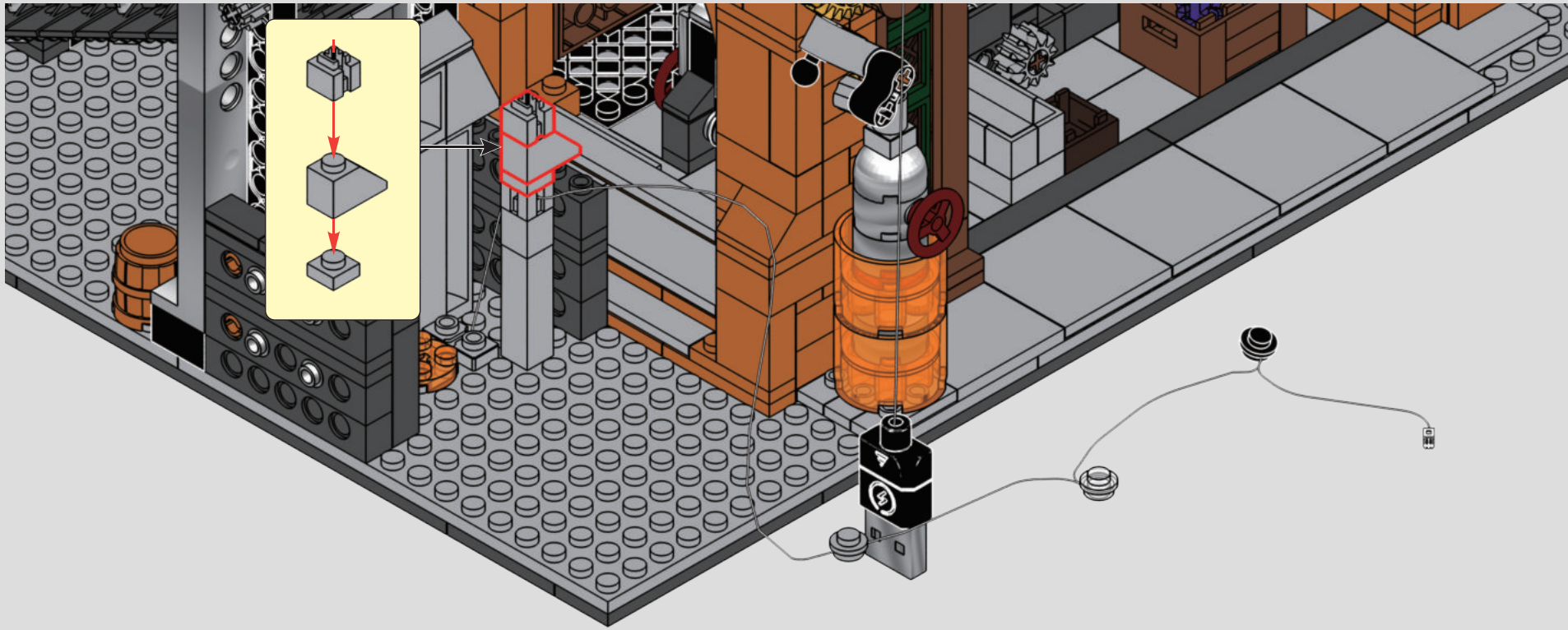

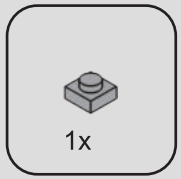

246

1

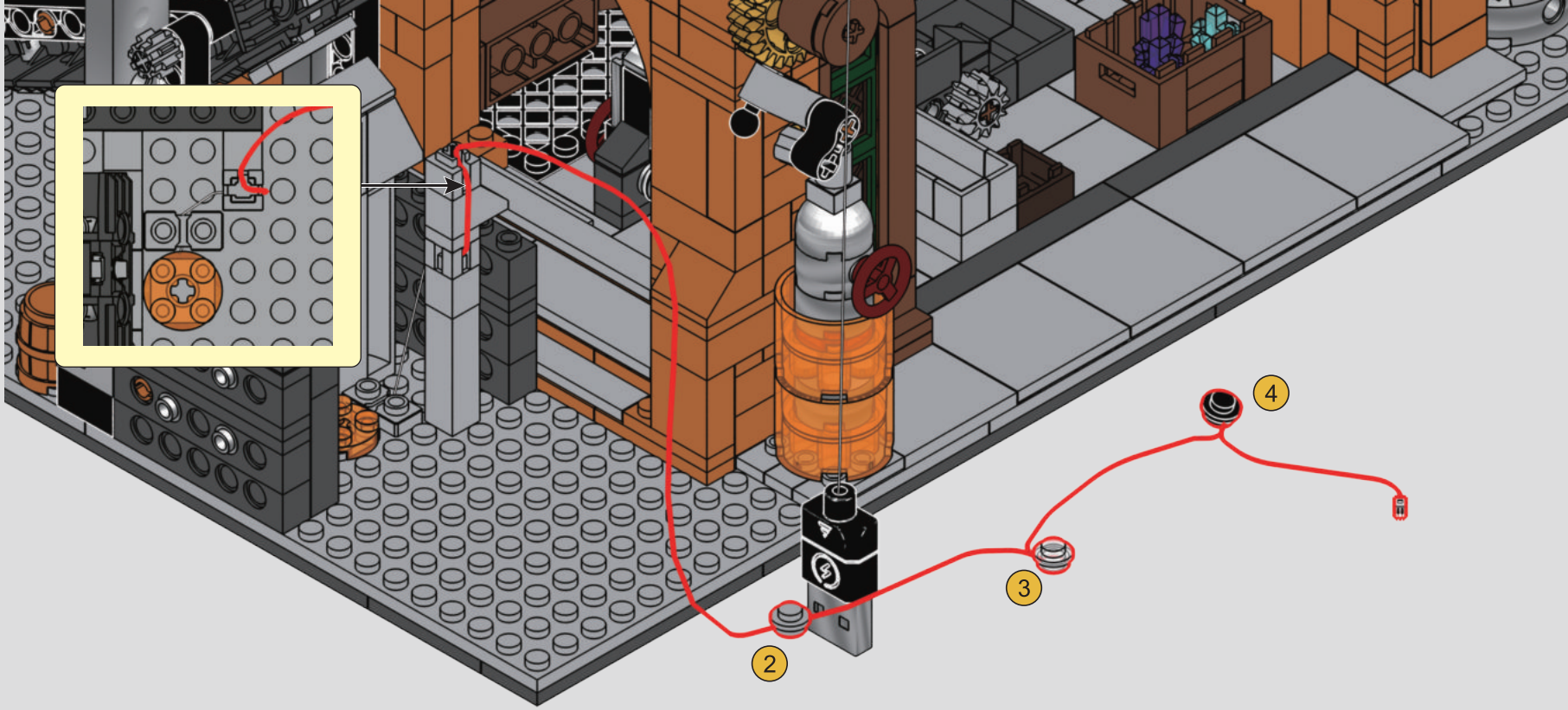

2



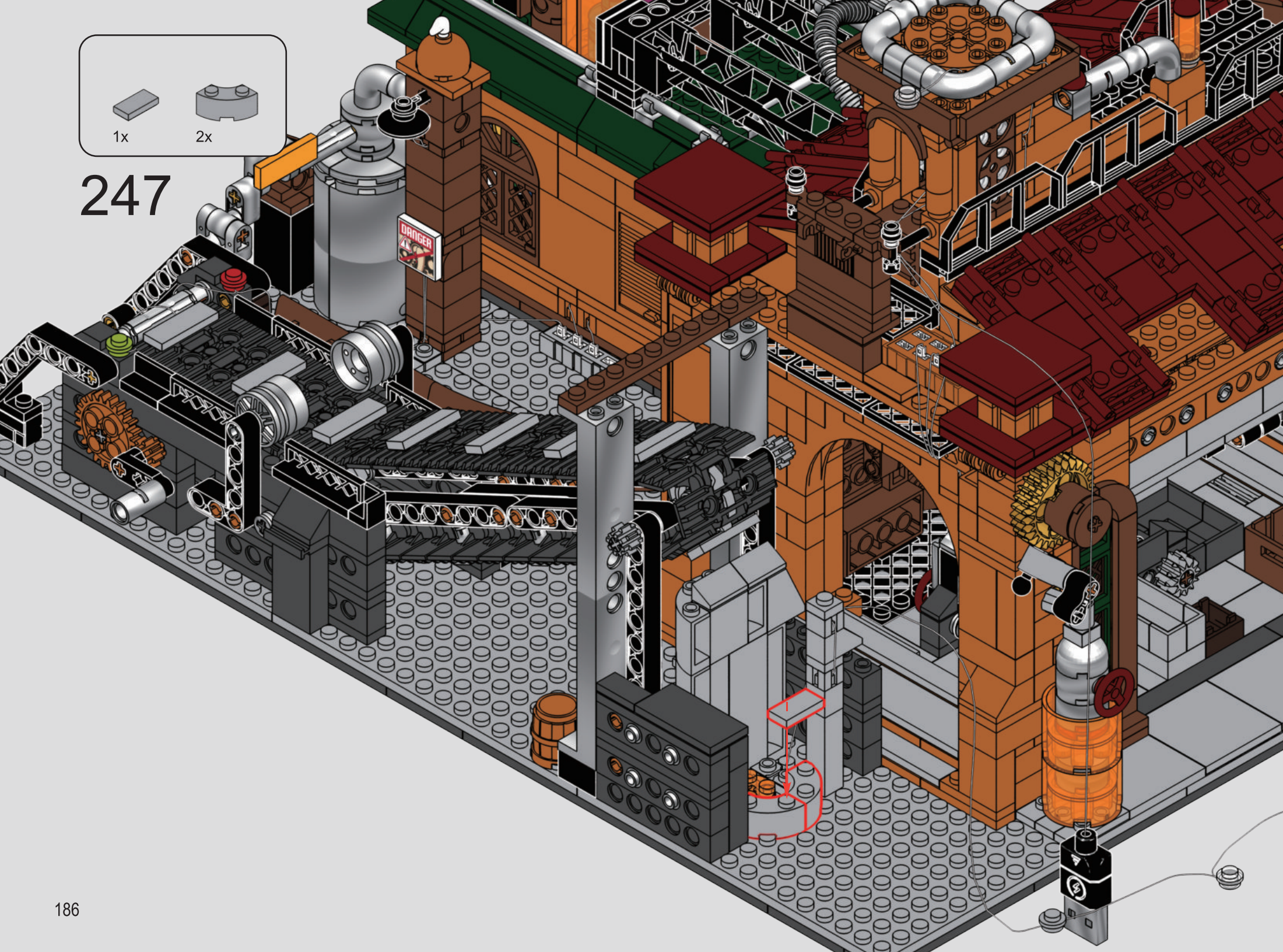
1x
2x
247
DANGER

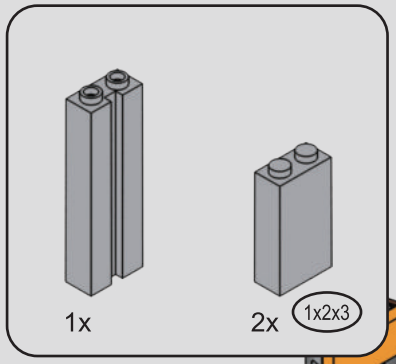

248

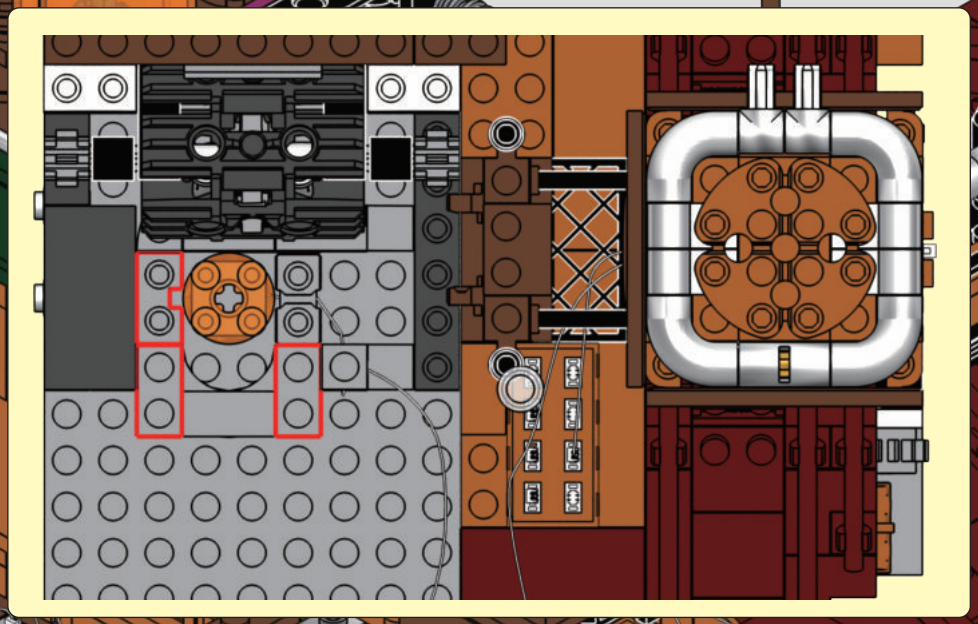

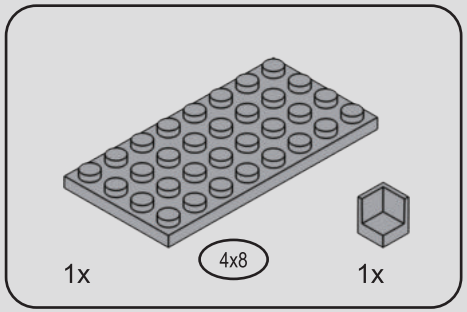

249

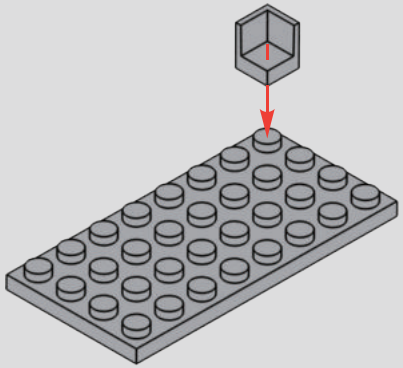

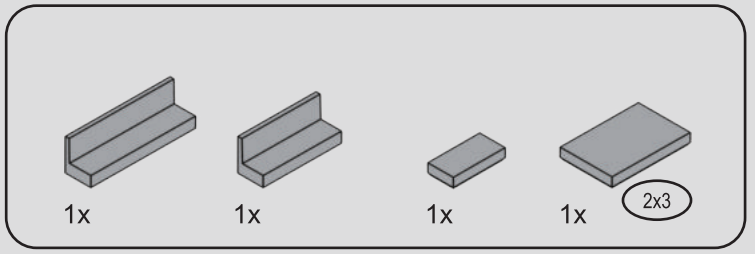

250

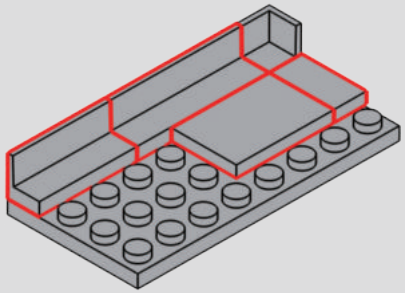

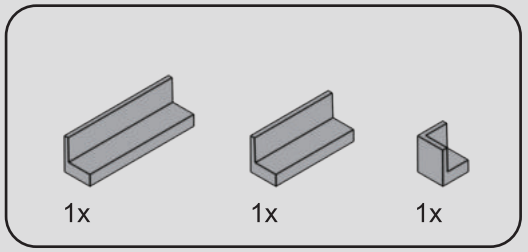

251

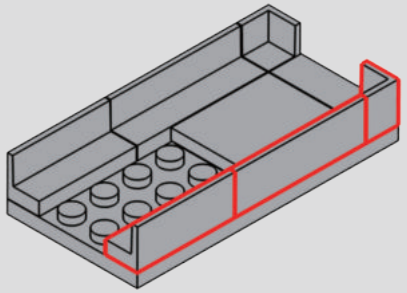

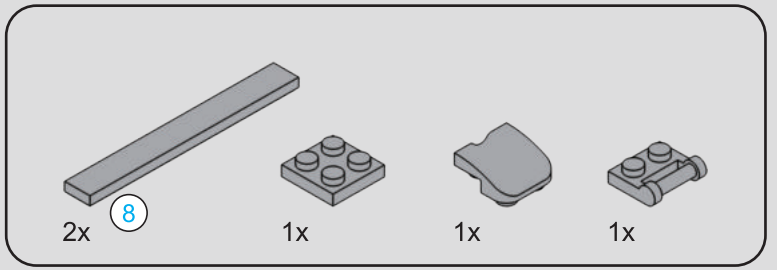

252

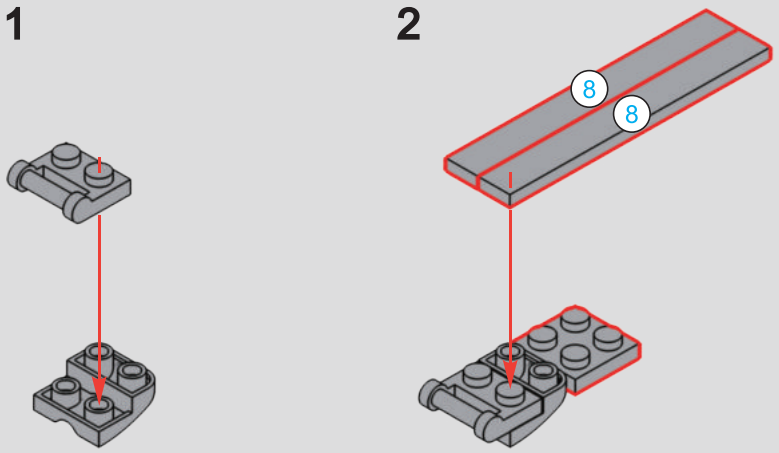



253

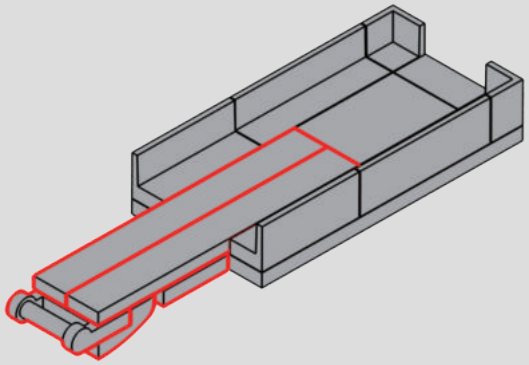

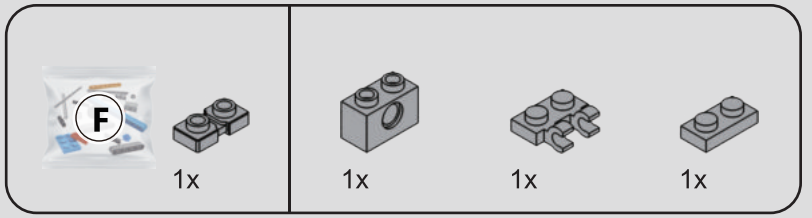

254

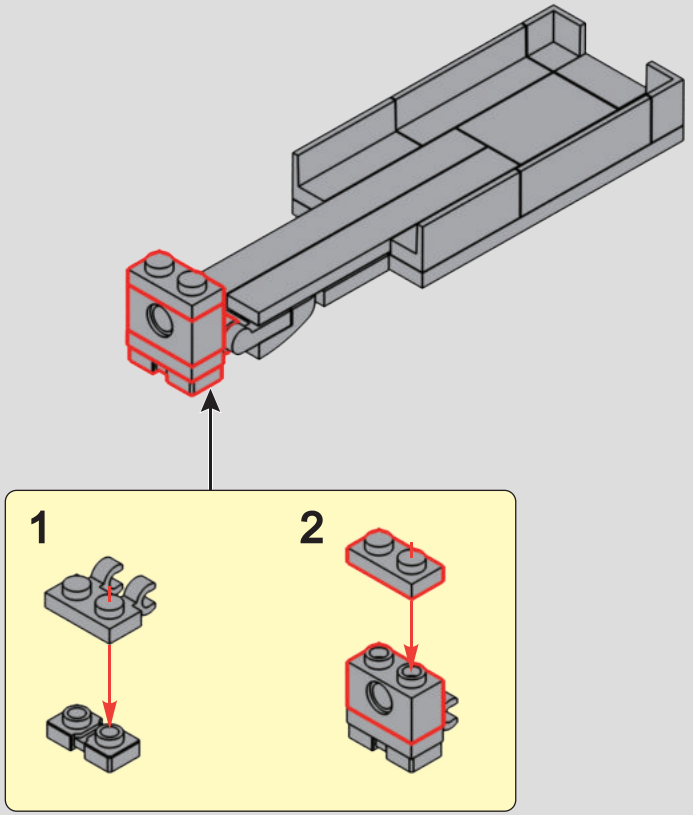

255

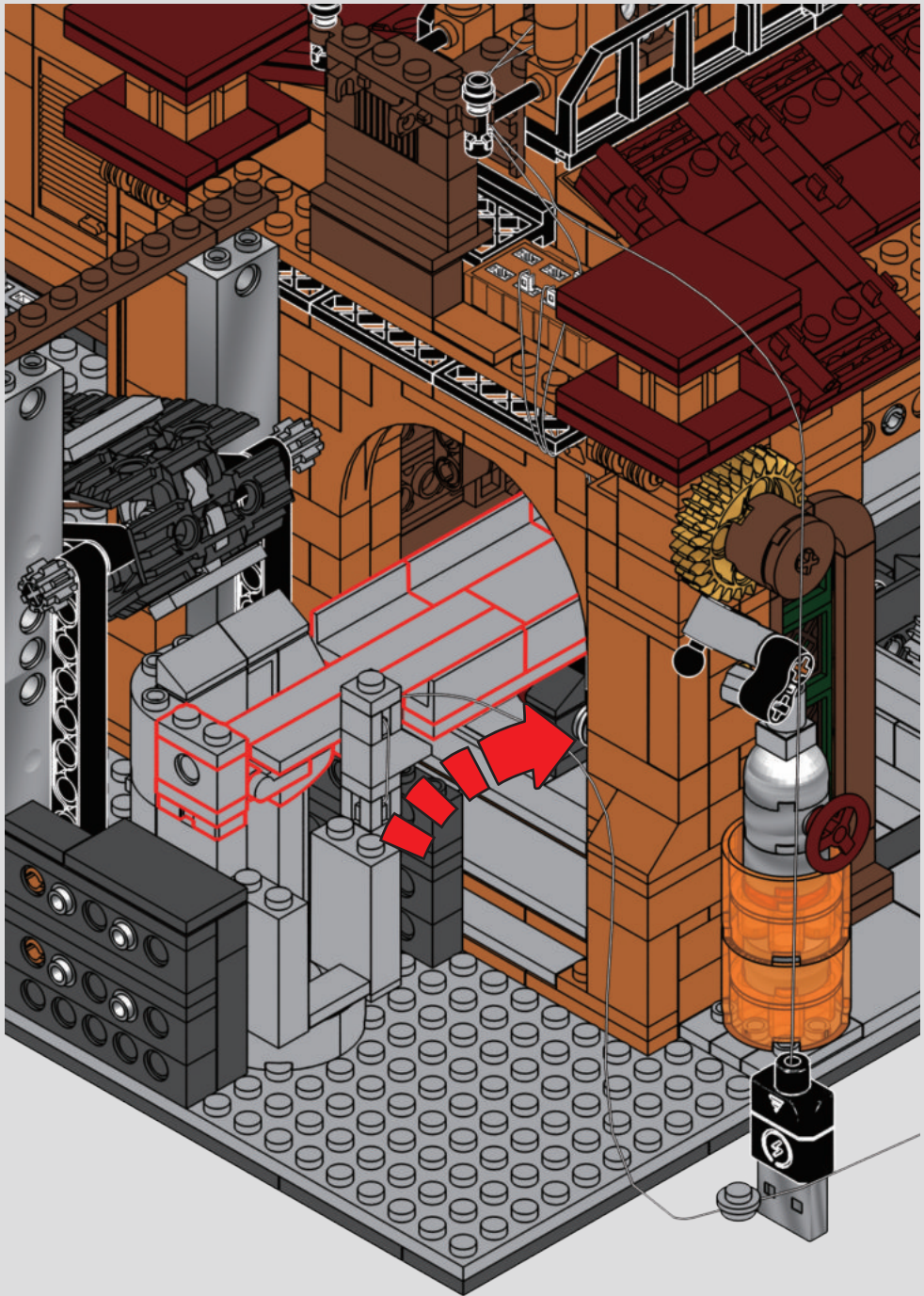

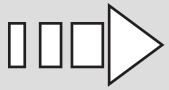

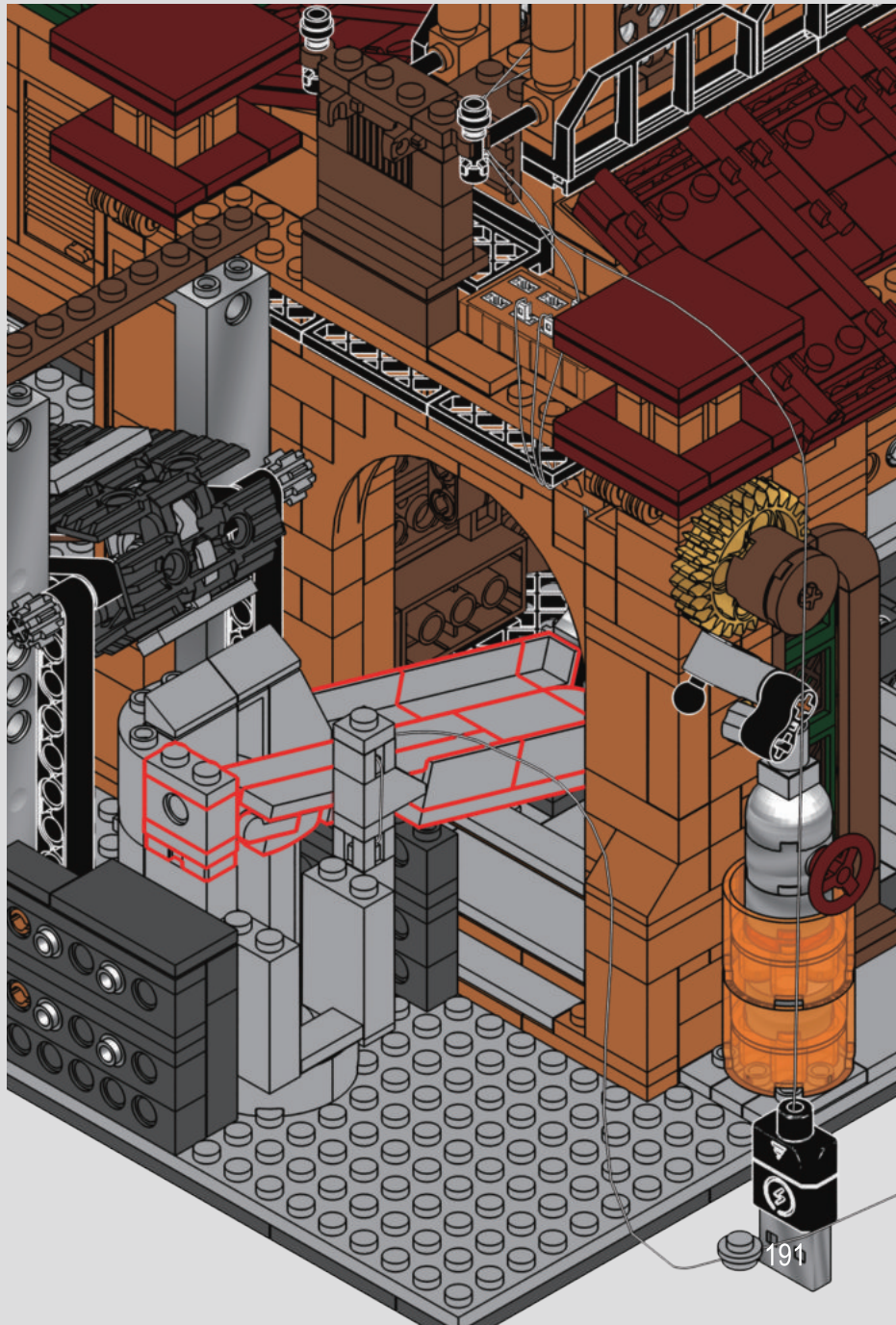



256

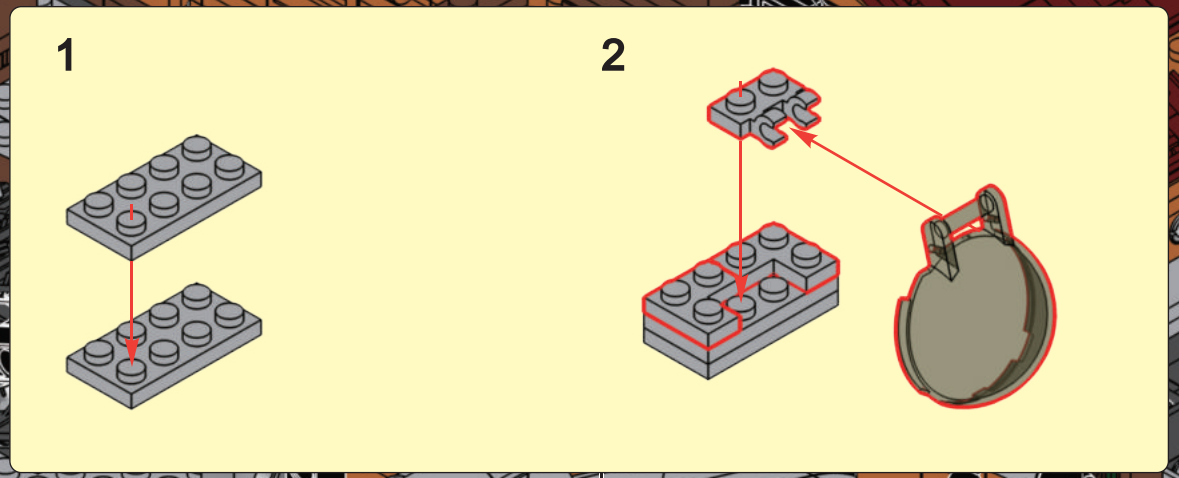

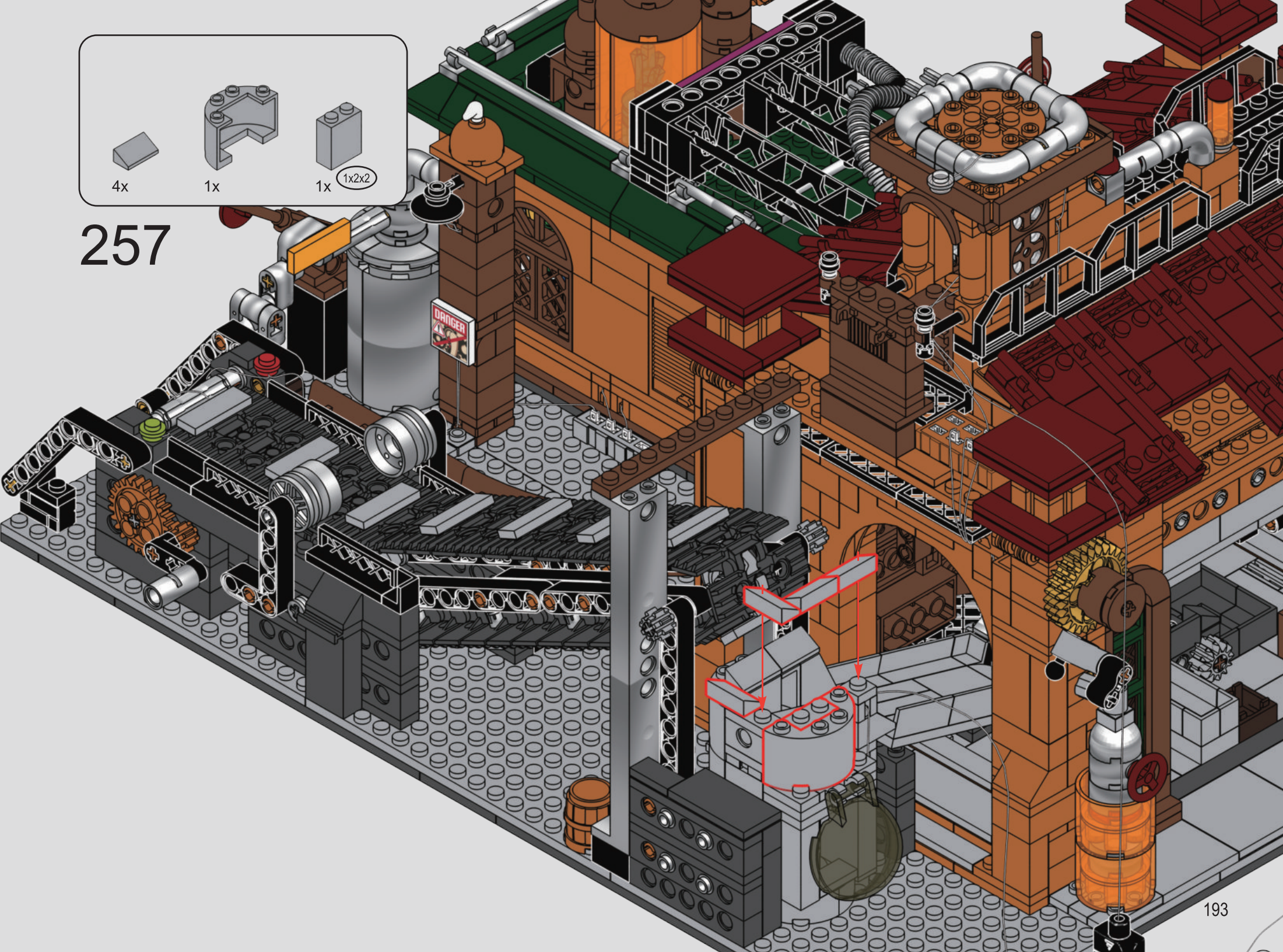
4x
1x
1x
1x2x2
257
DANGER


1x
258
DANGER

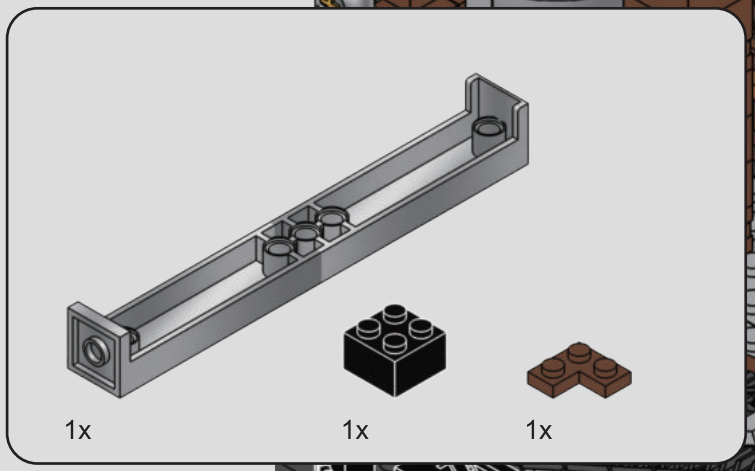

259

1



2


1x
2x8
260
3
2
3
2
4
3
DANGER

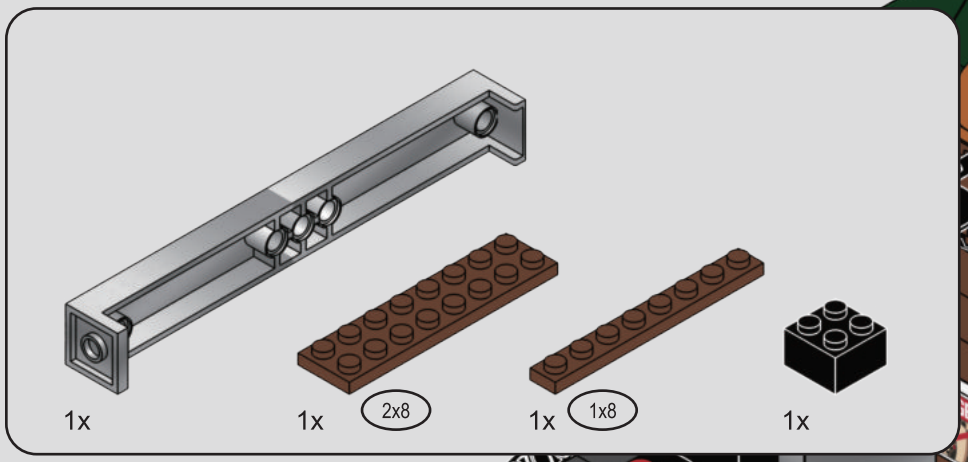

261

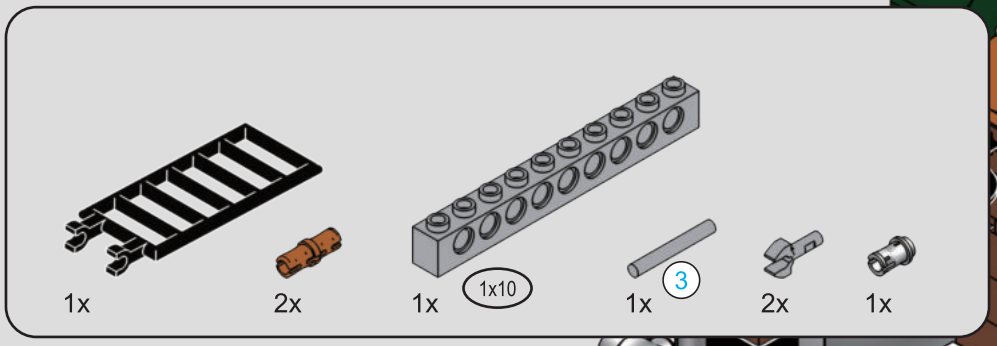

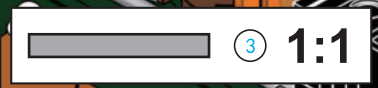

262

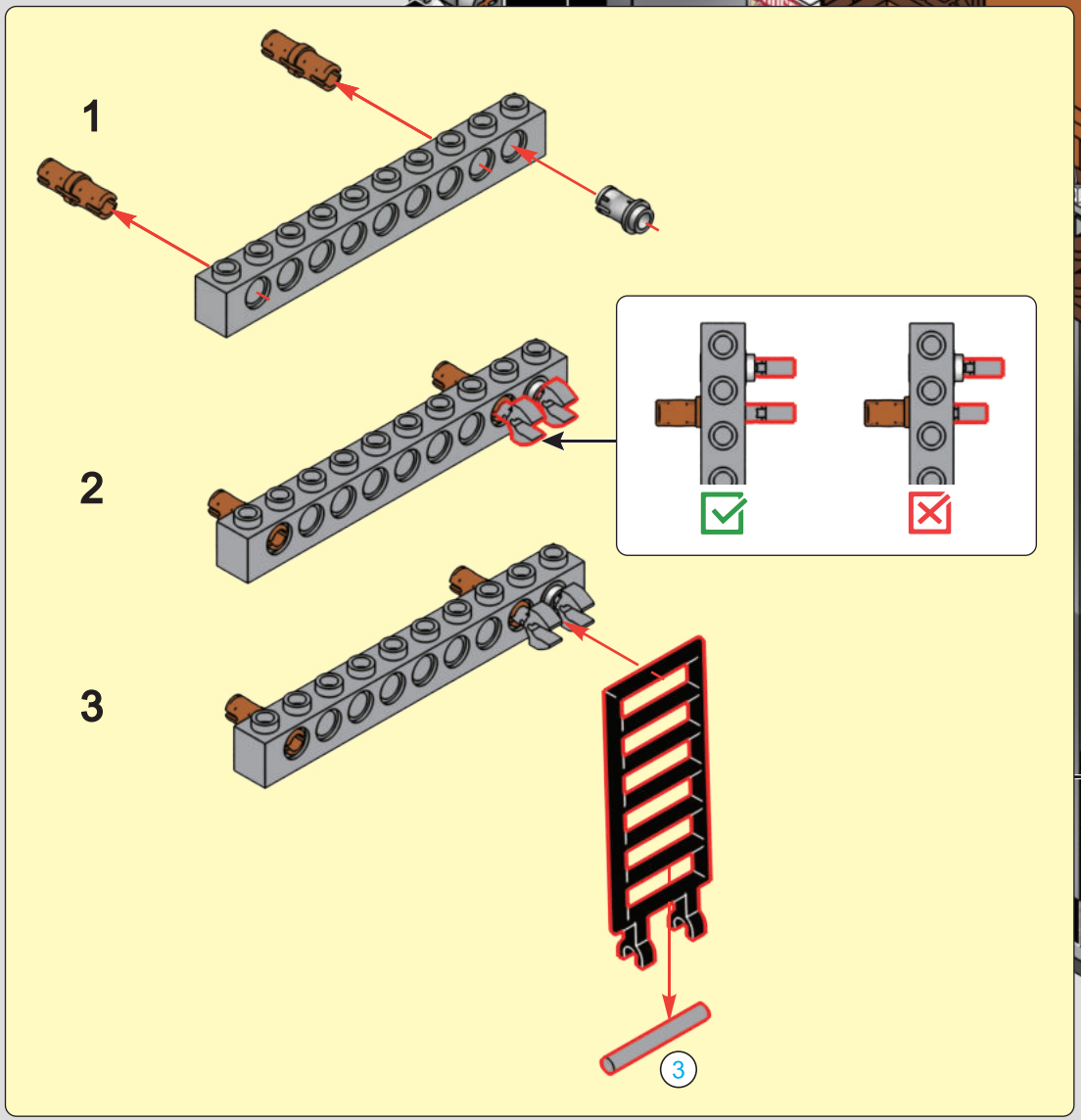


1x
1x5
1x
2x4
2x
1x
263
DANGER

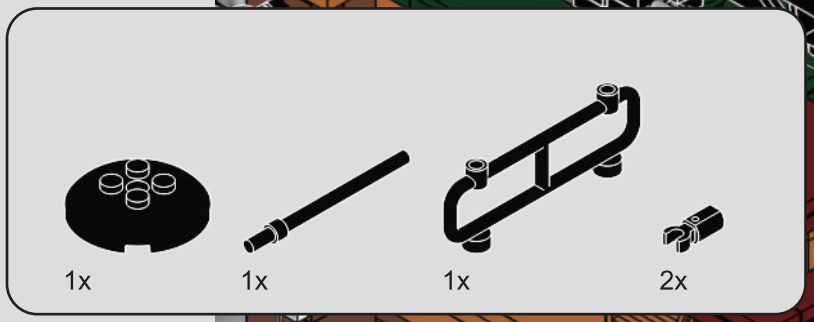

264

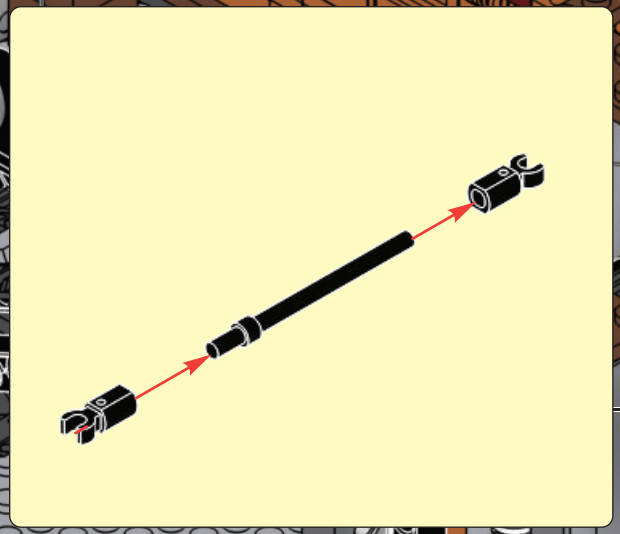

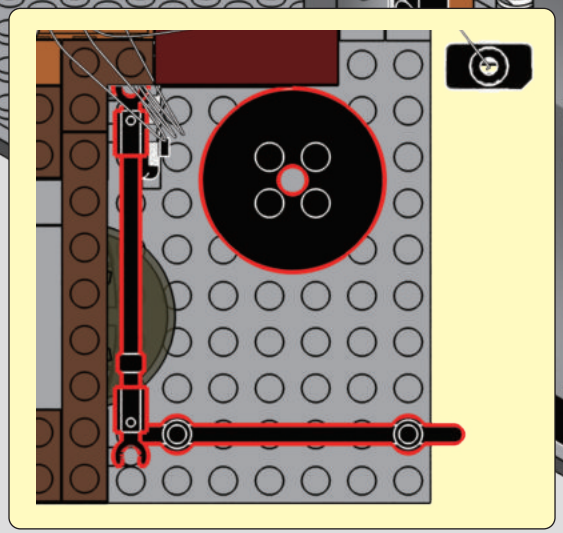

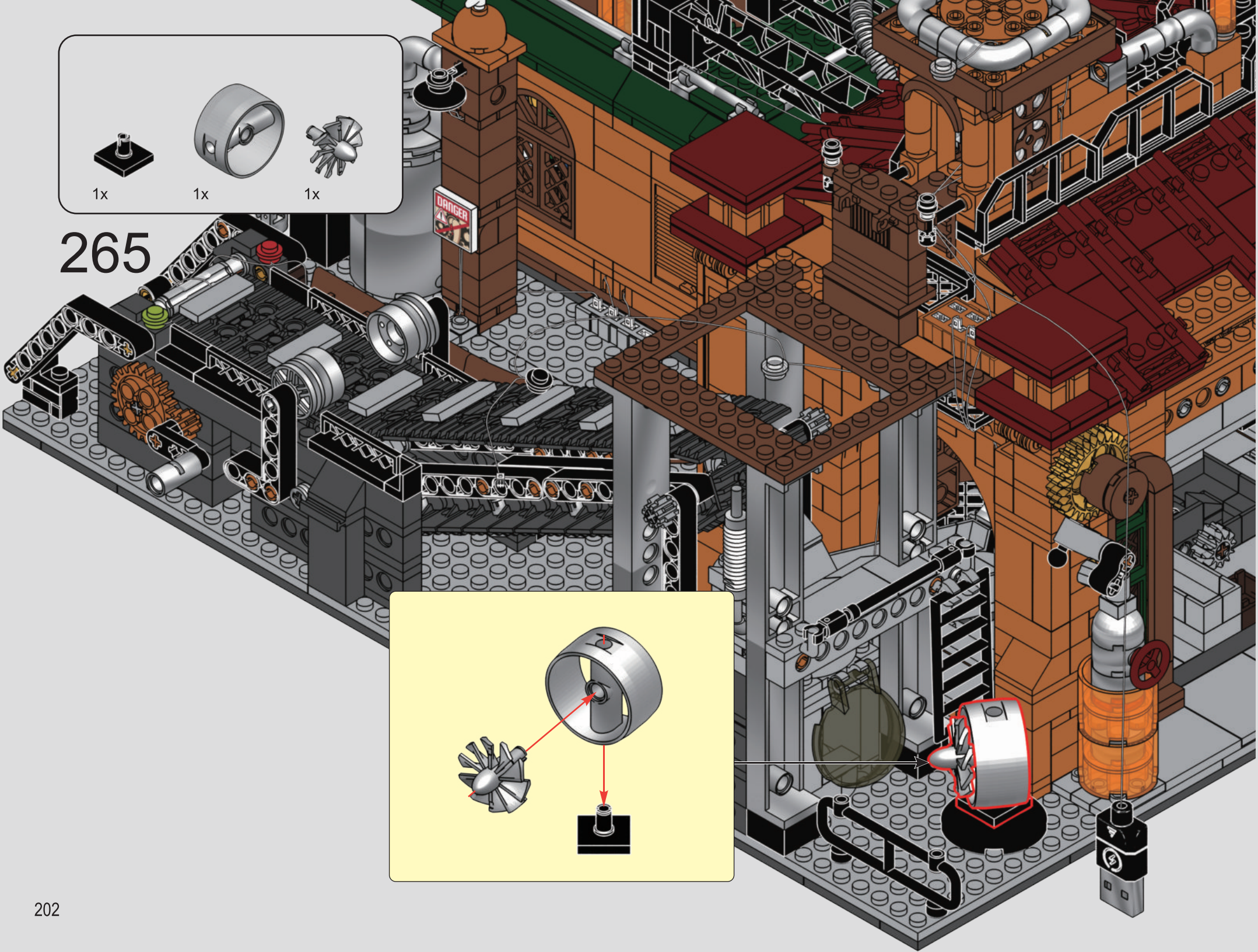
1x
1x
1x
265
DANGER

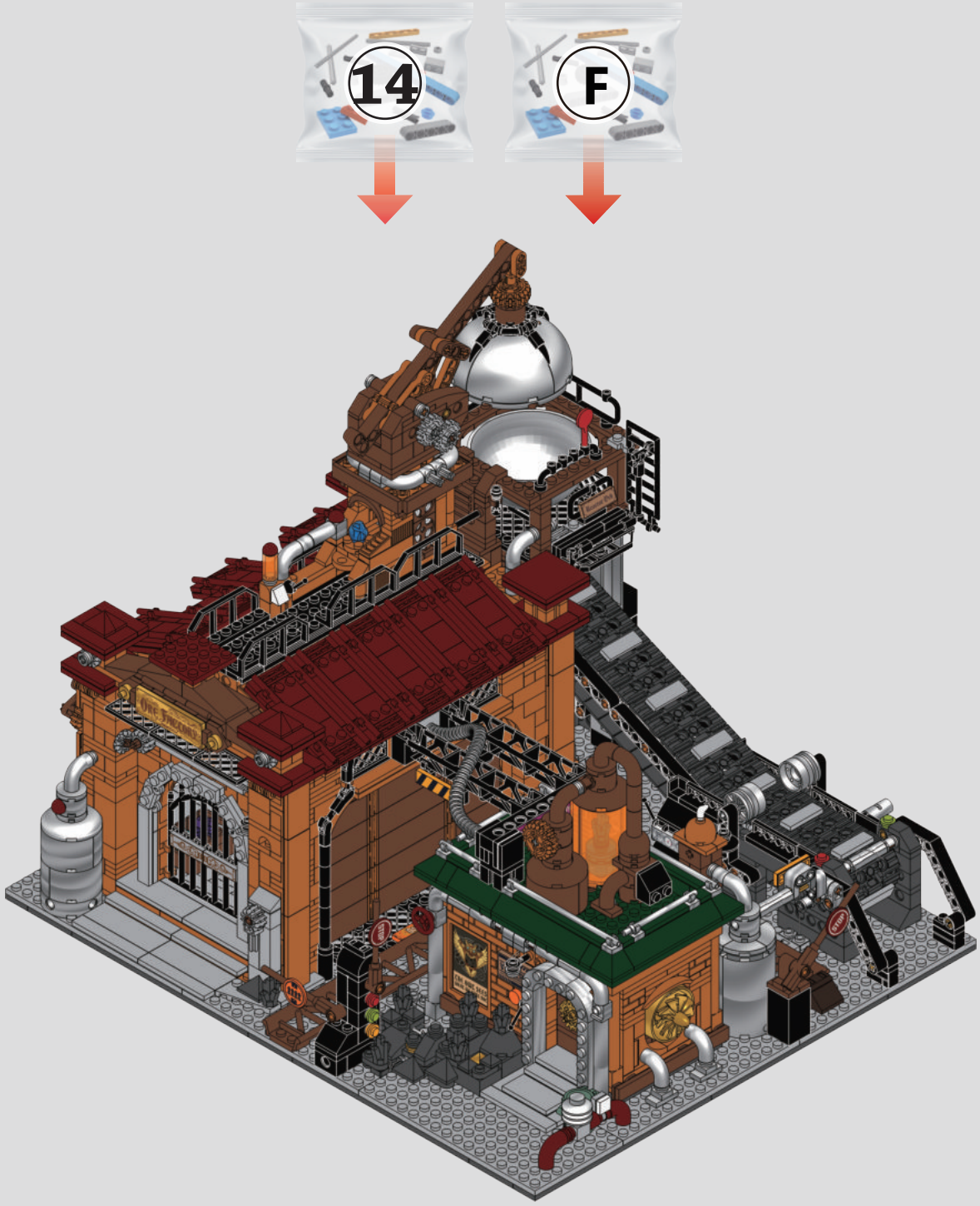
14
F

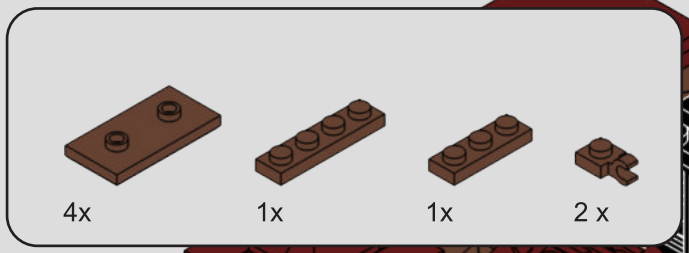

266

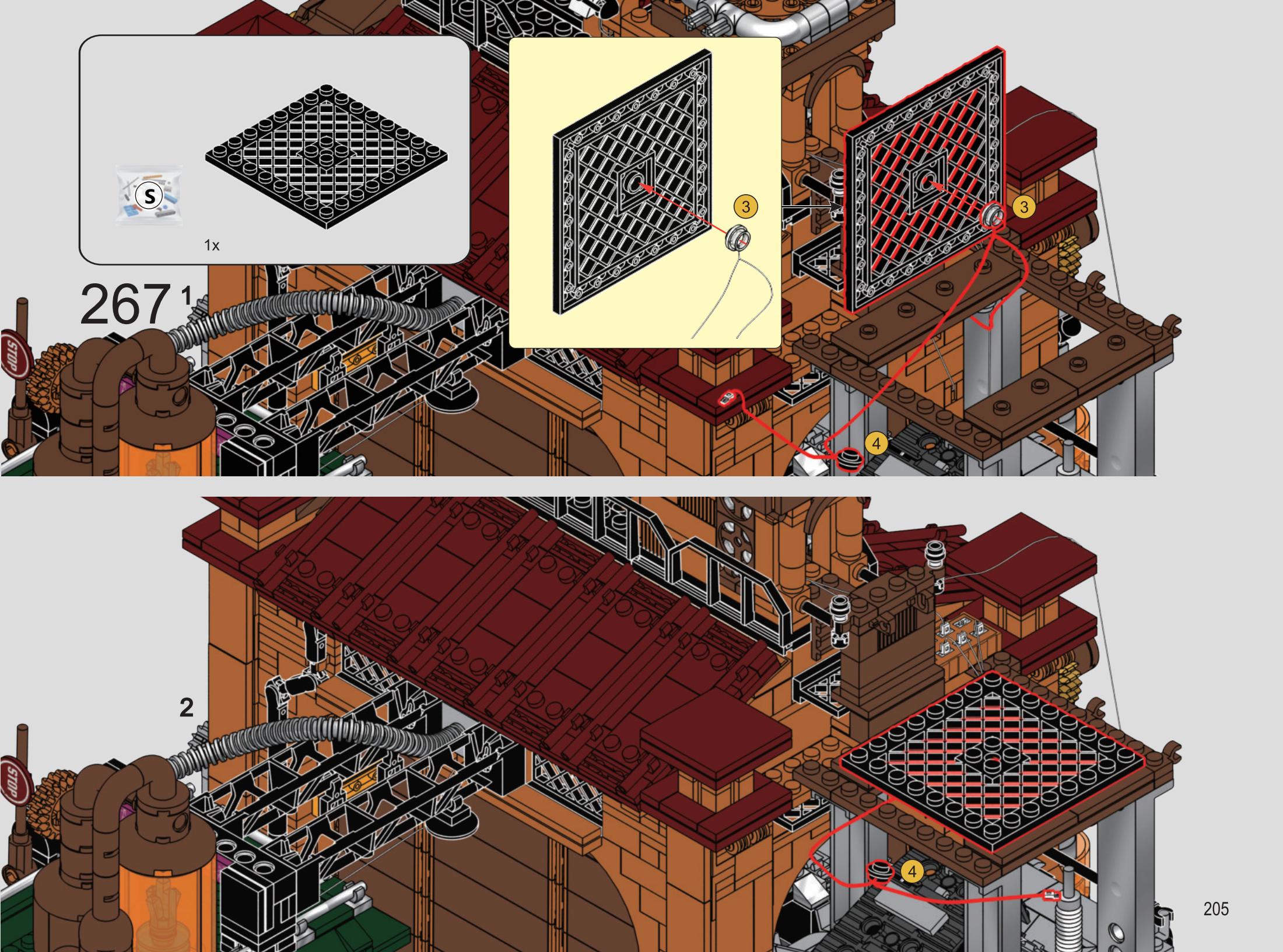
S
1x
267 1
3
3
4
2
4

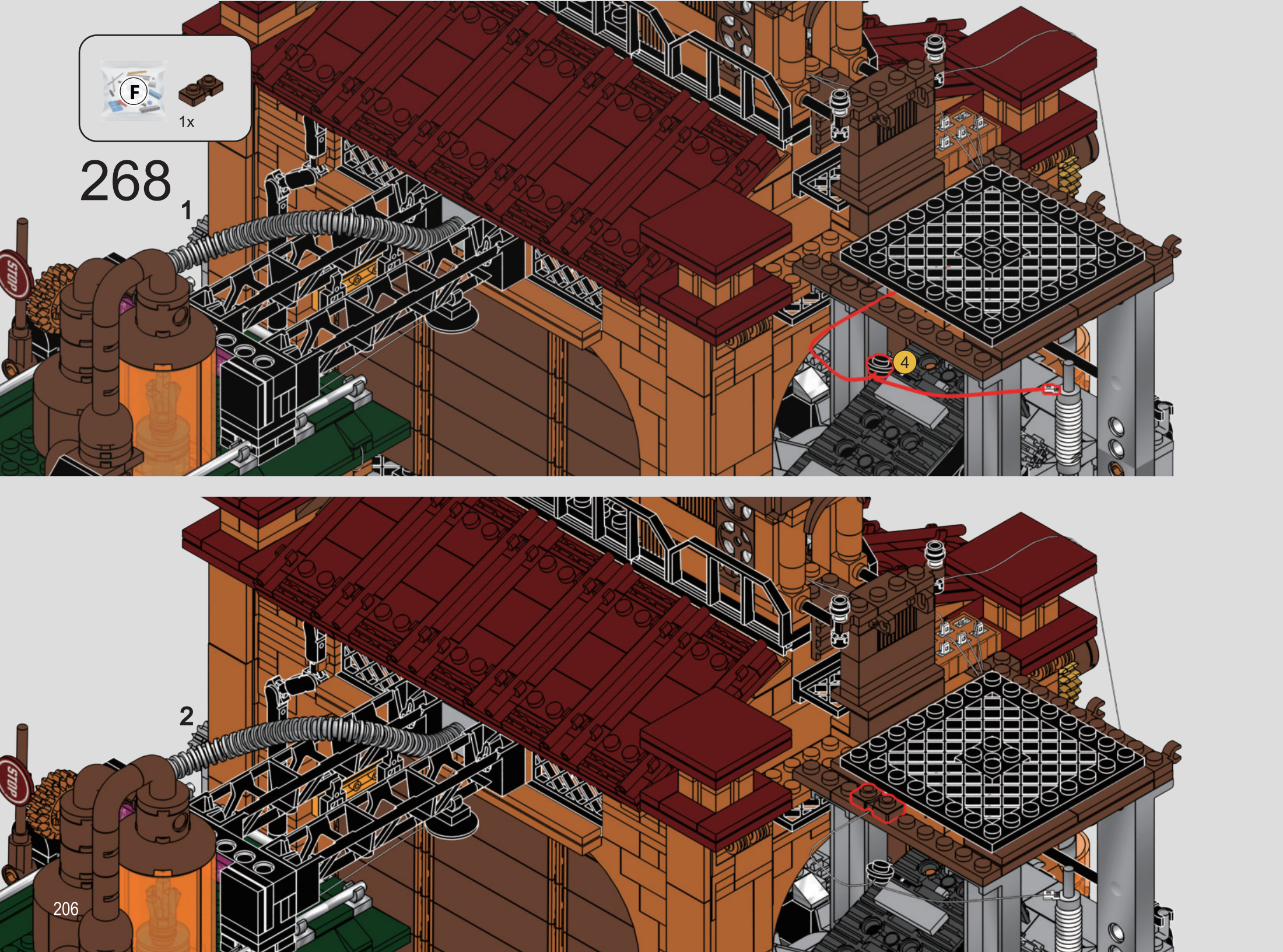
F
1x
268
1
4
2

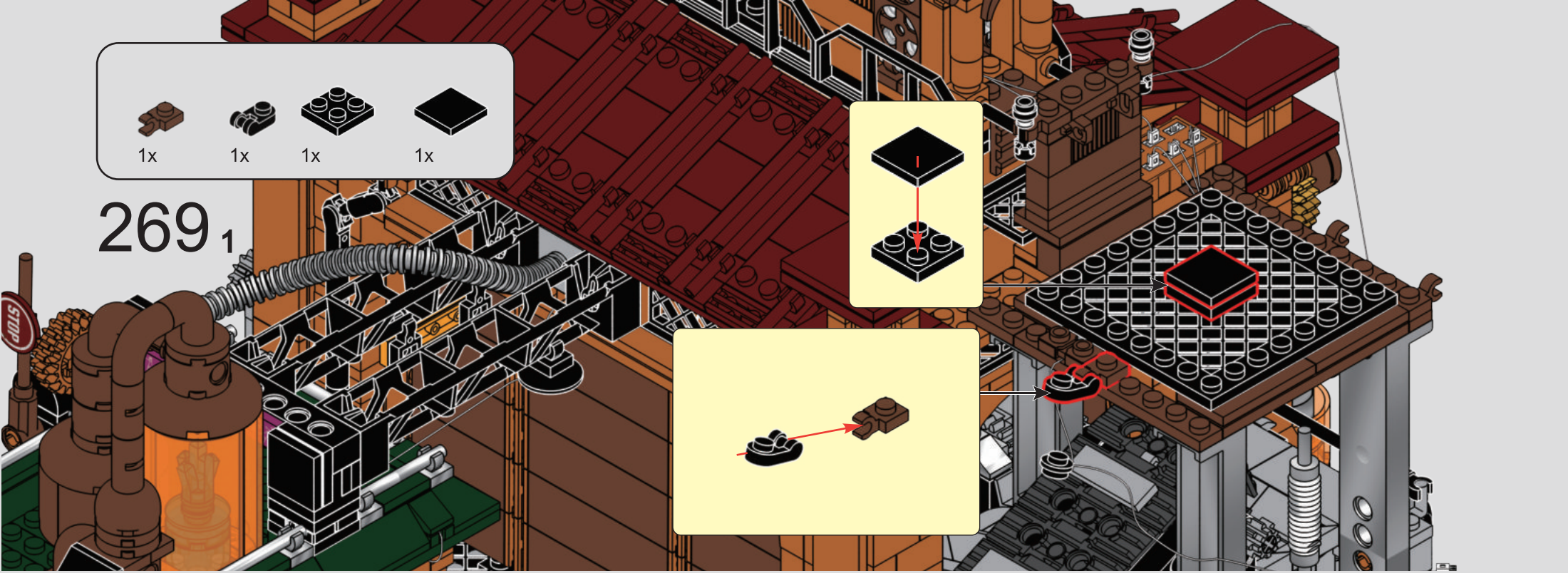
1x
1x
1x
1x
269 1

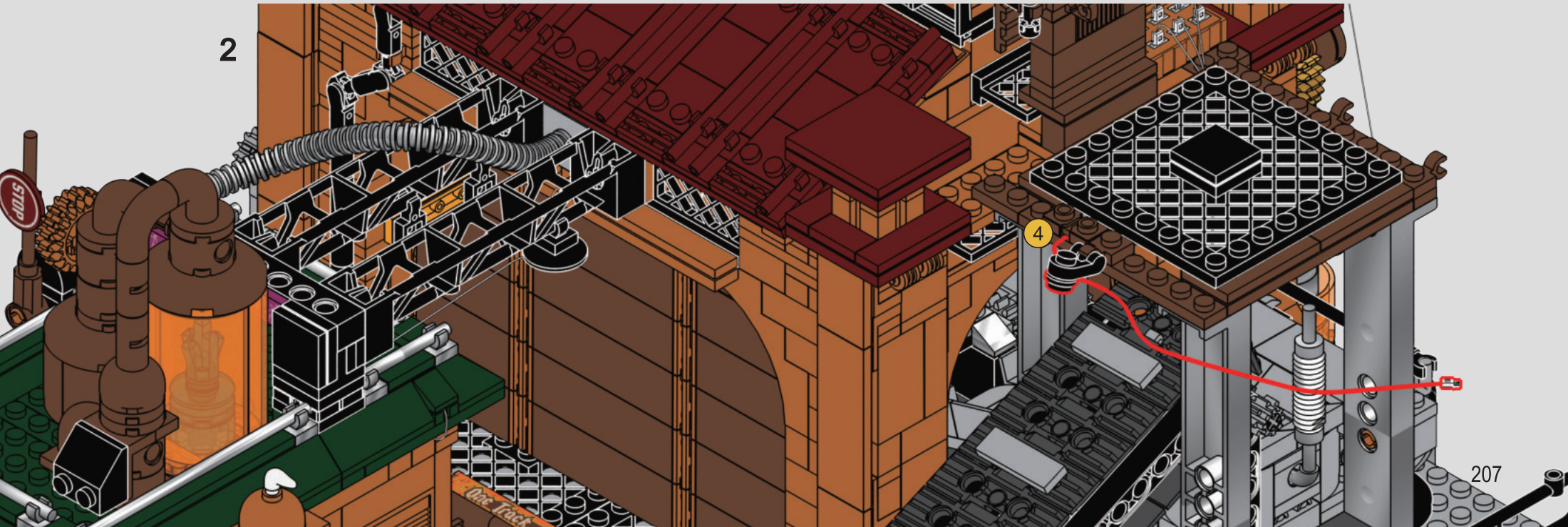
2
4

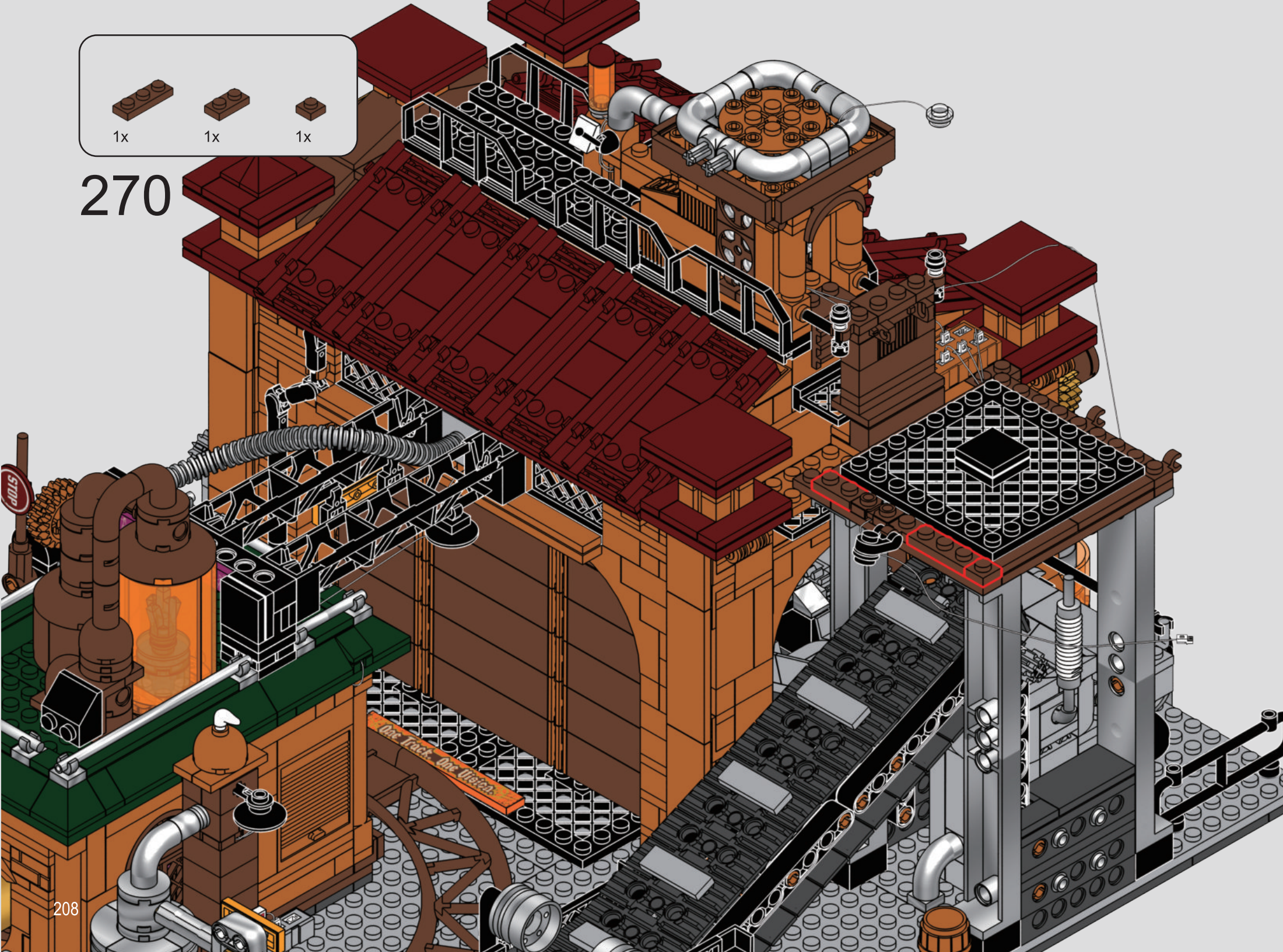
1x
1x
1x
270
STOP
One Truck. One Vision.

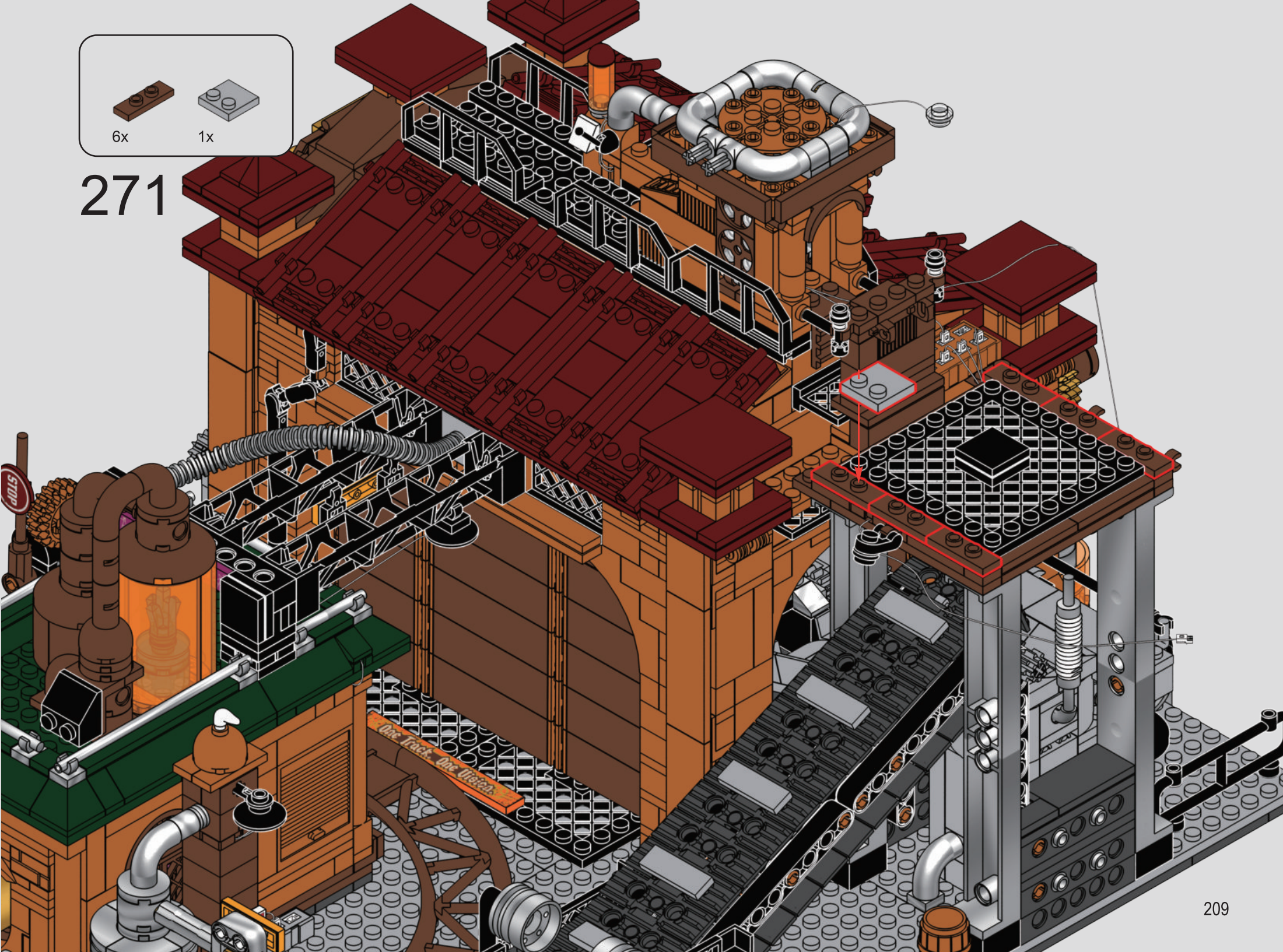
6x
1x
271
STOP
One Truck. One Vision.

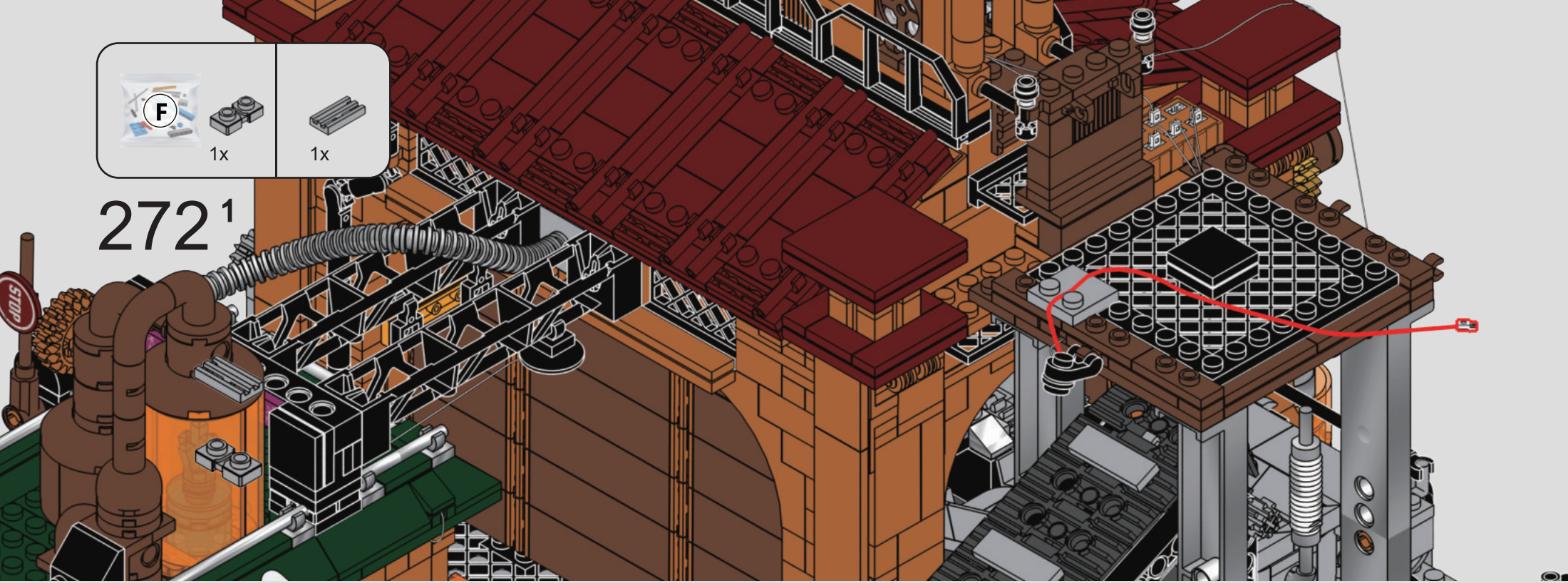
F
1x
1x
272 1

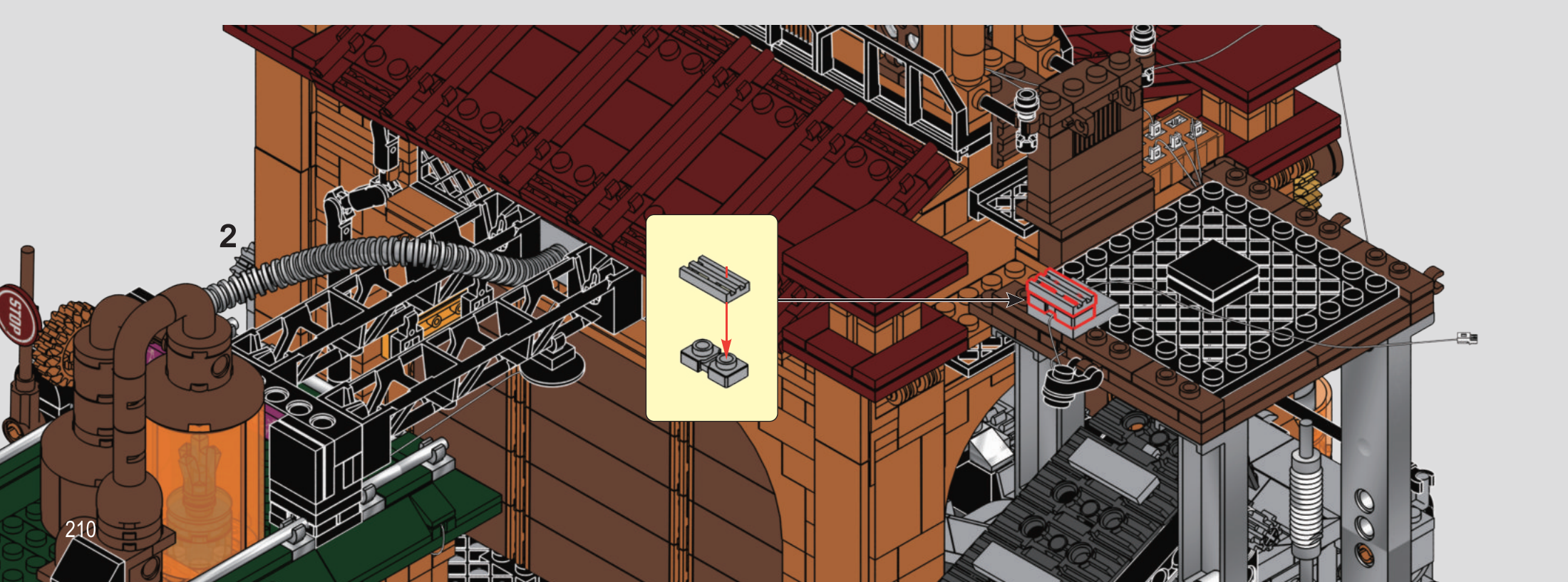
2

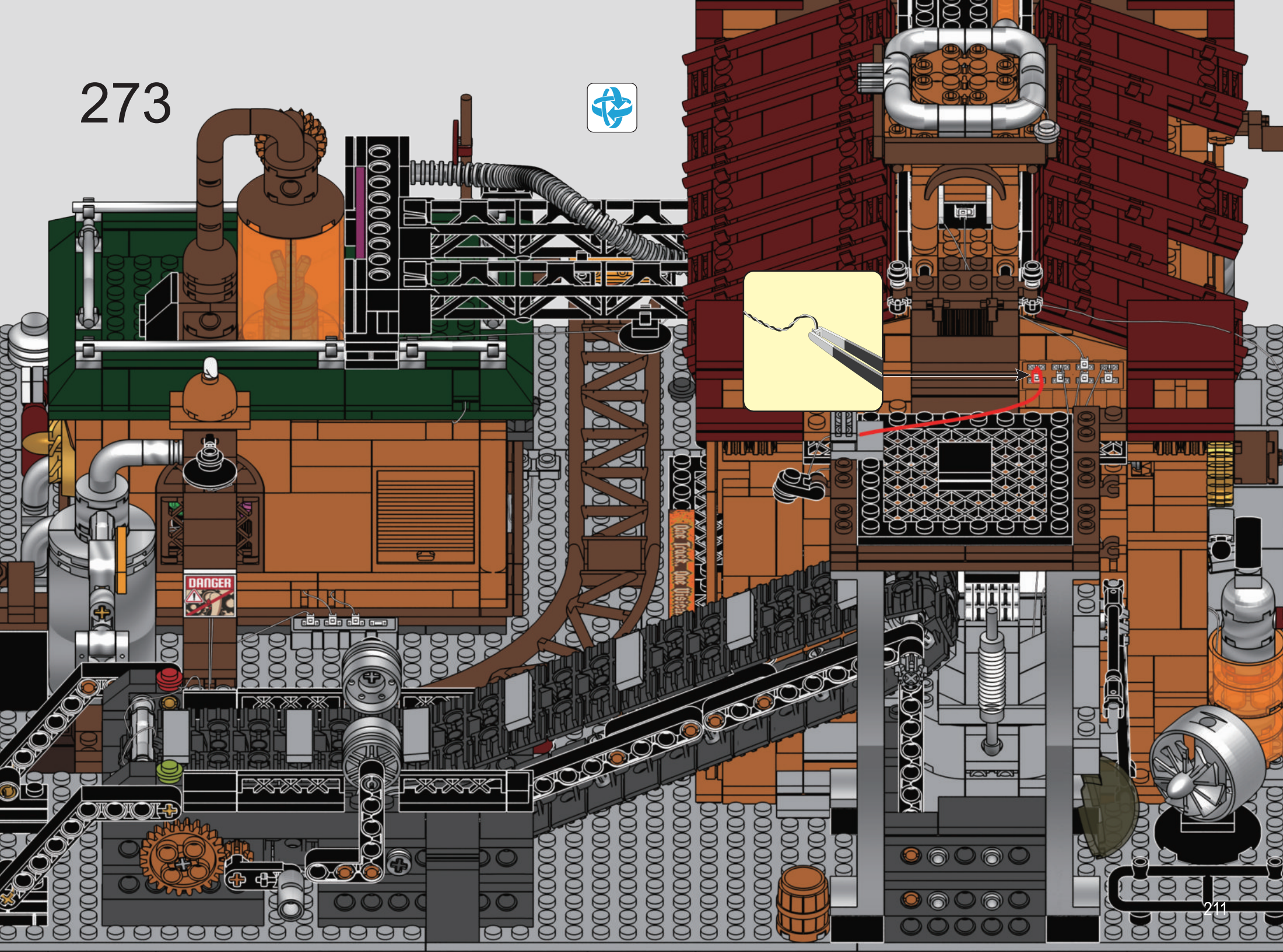
273
DANGER

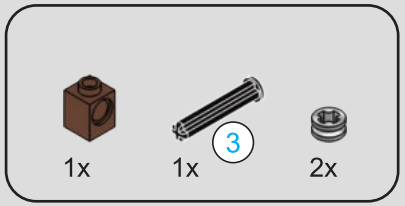



274

1

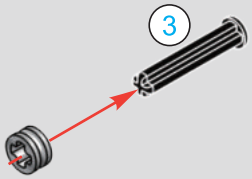

2

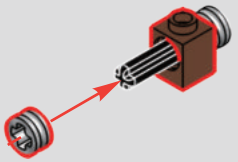

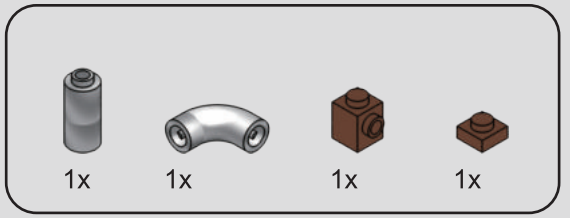

275

1

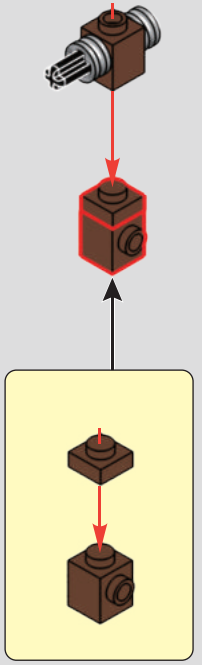

2

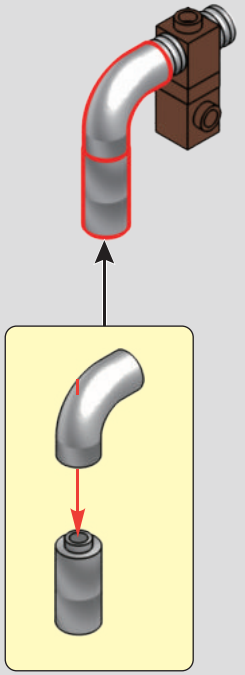

276

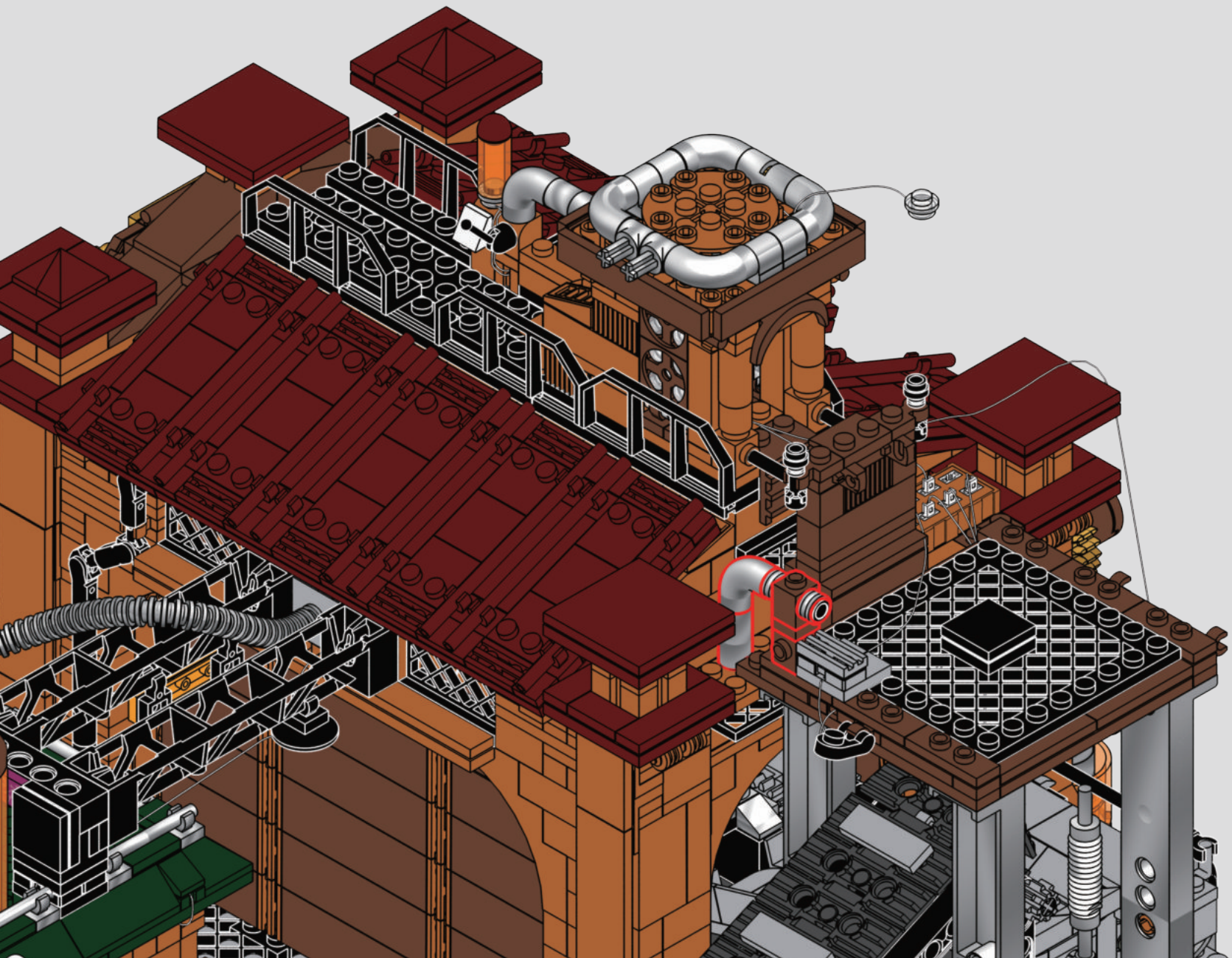

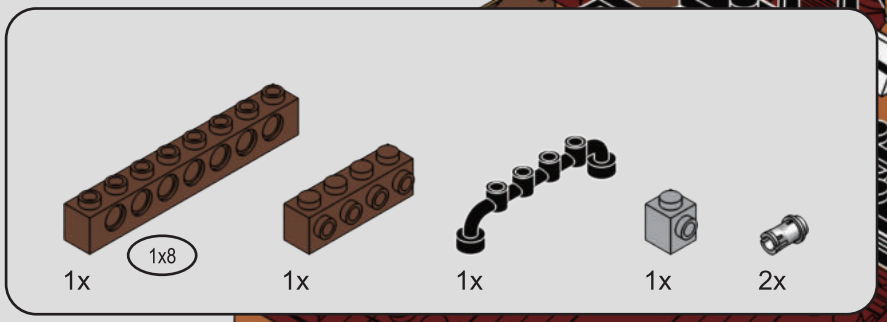

277

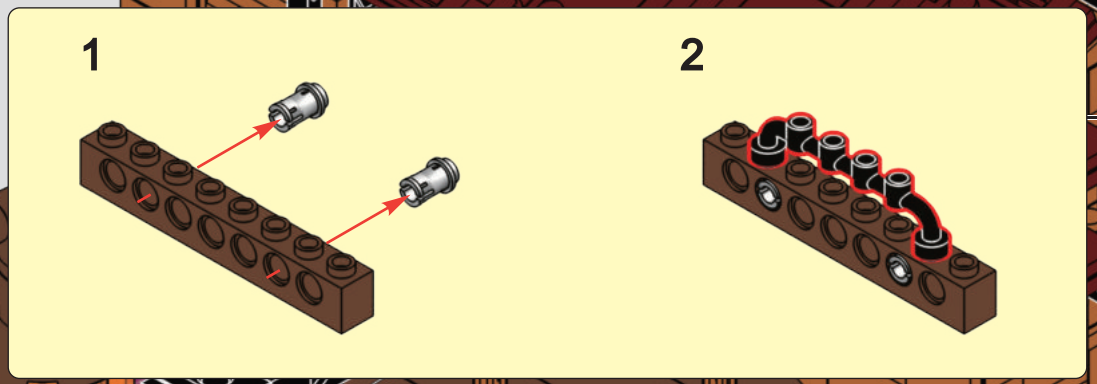

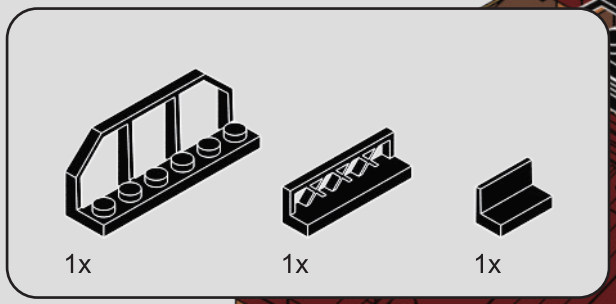

278

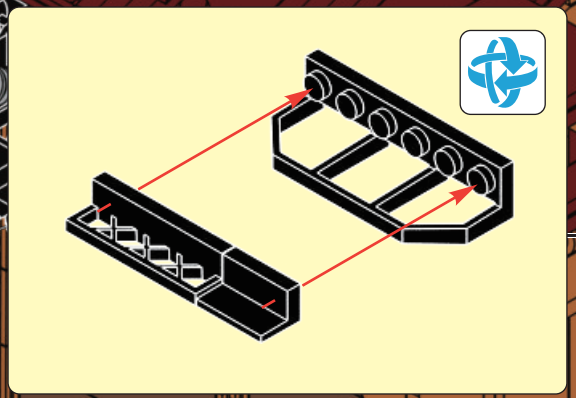



279

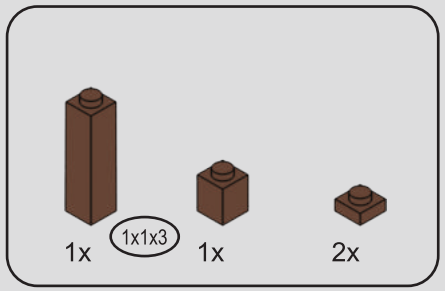

280

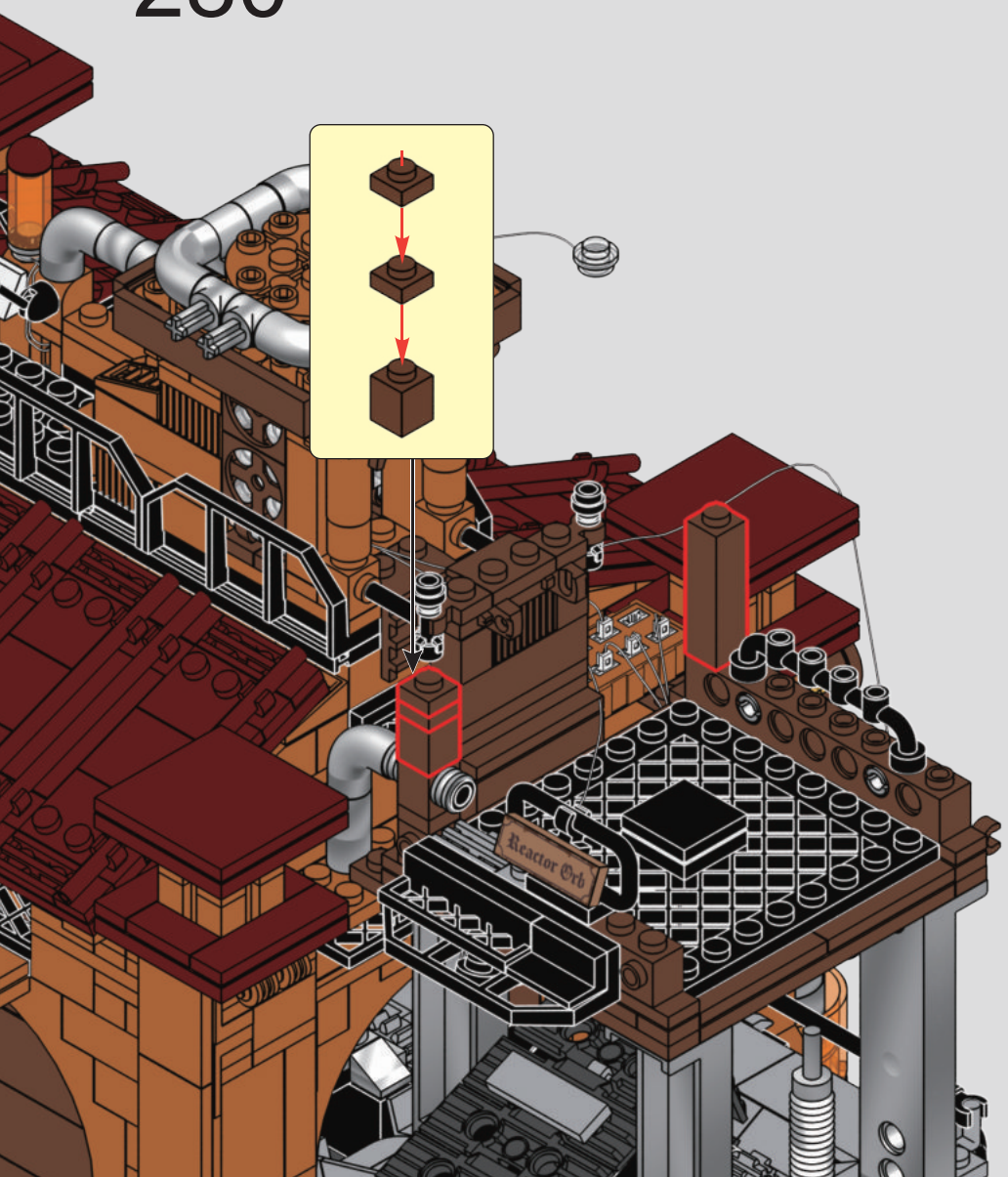

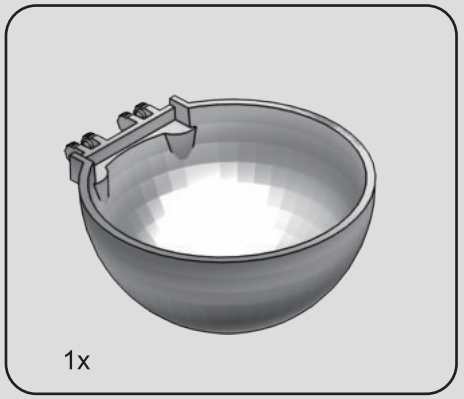

281

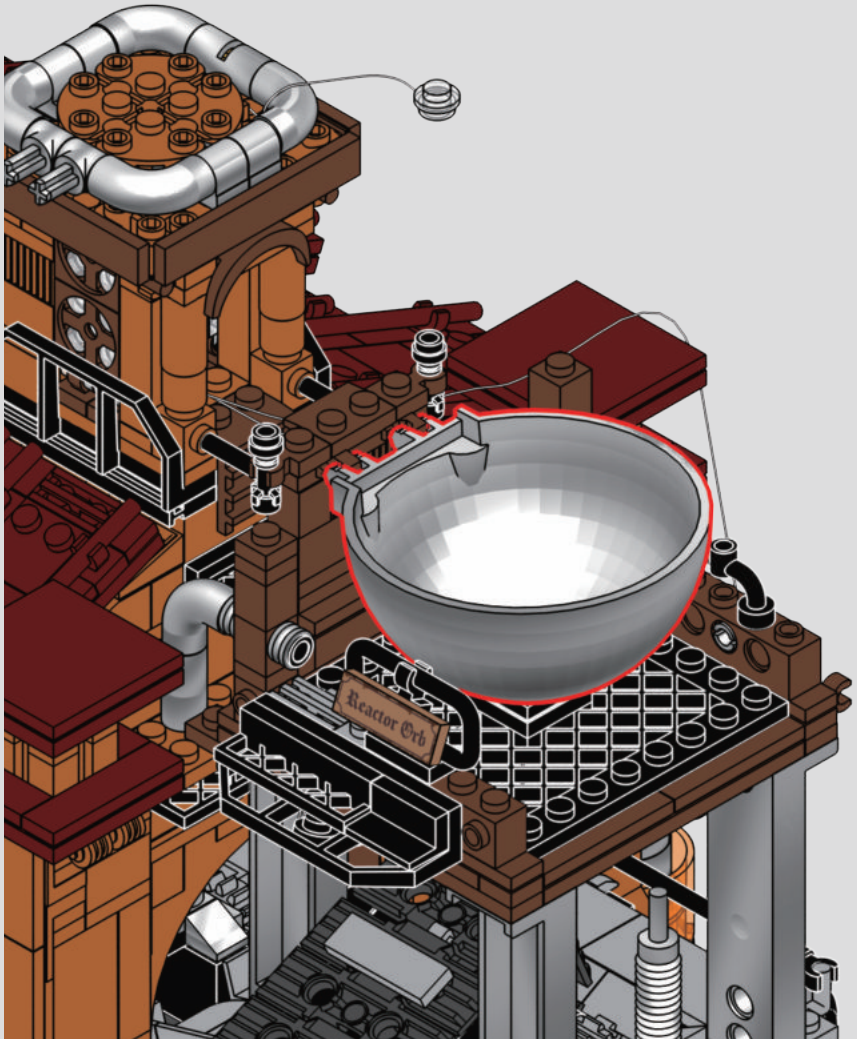

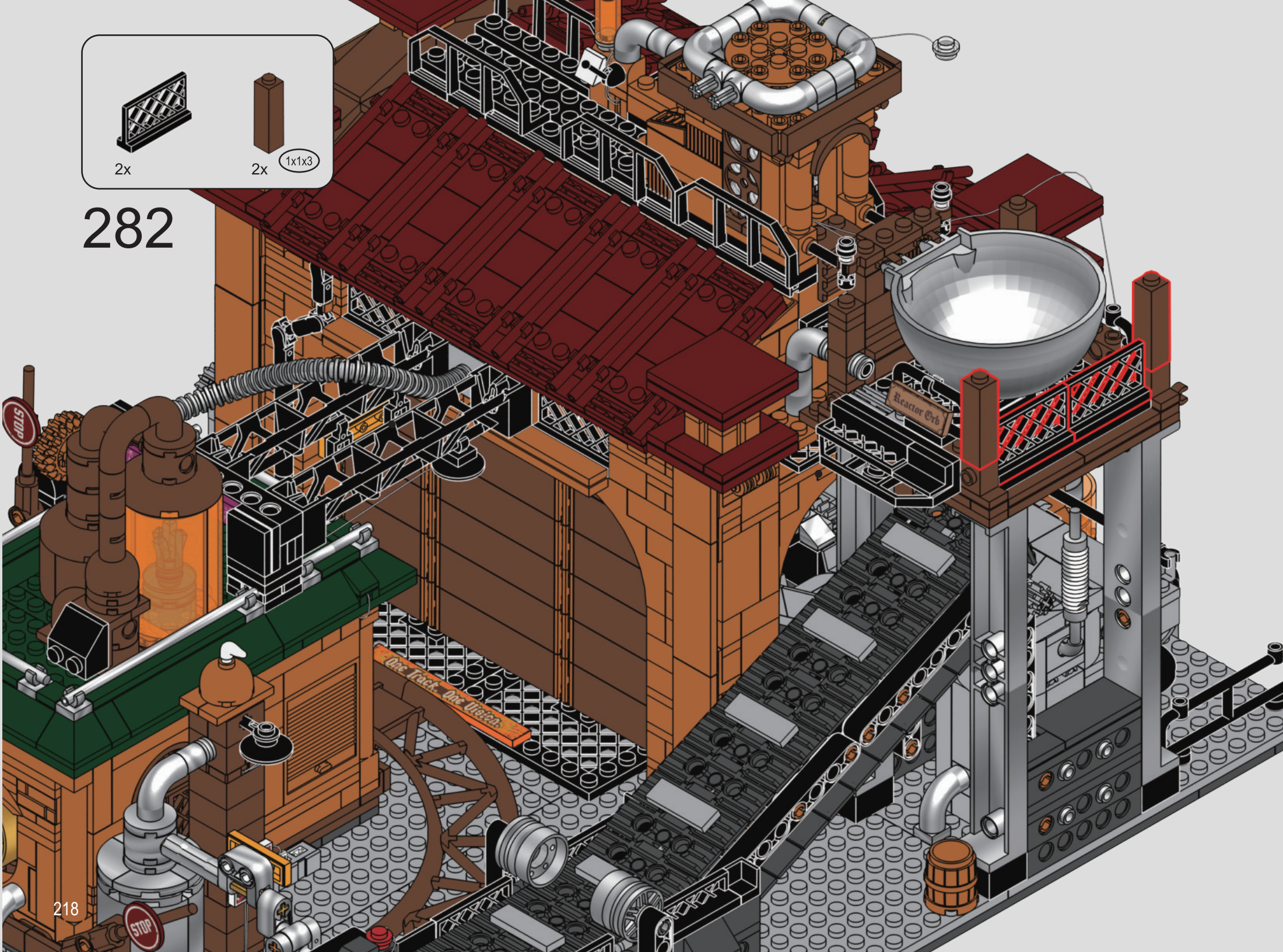
2x
2x
1x1x3
282
Reactor Orb
STOP
STOP

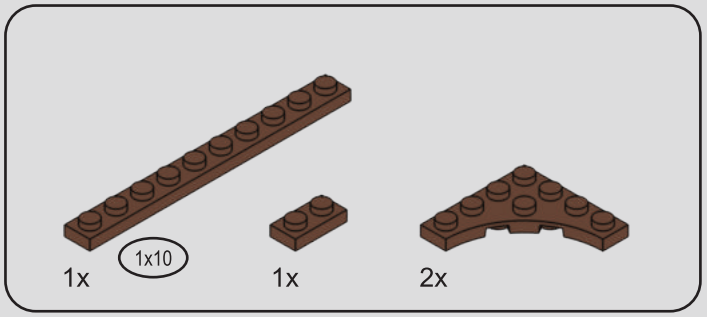

283

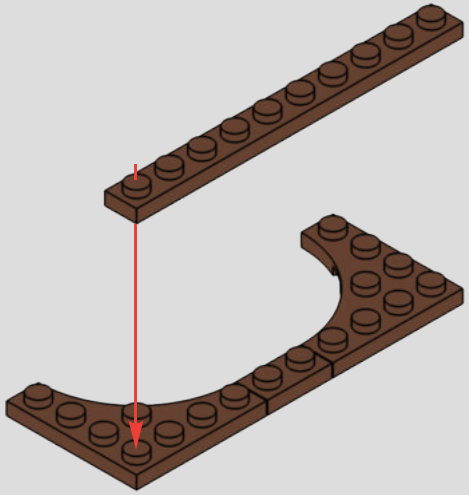

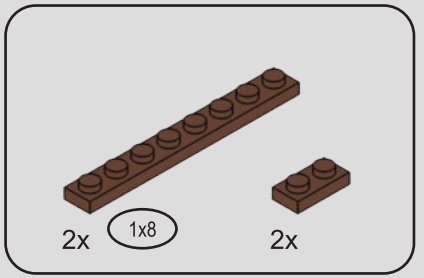

284

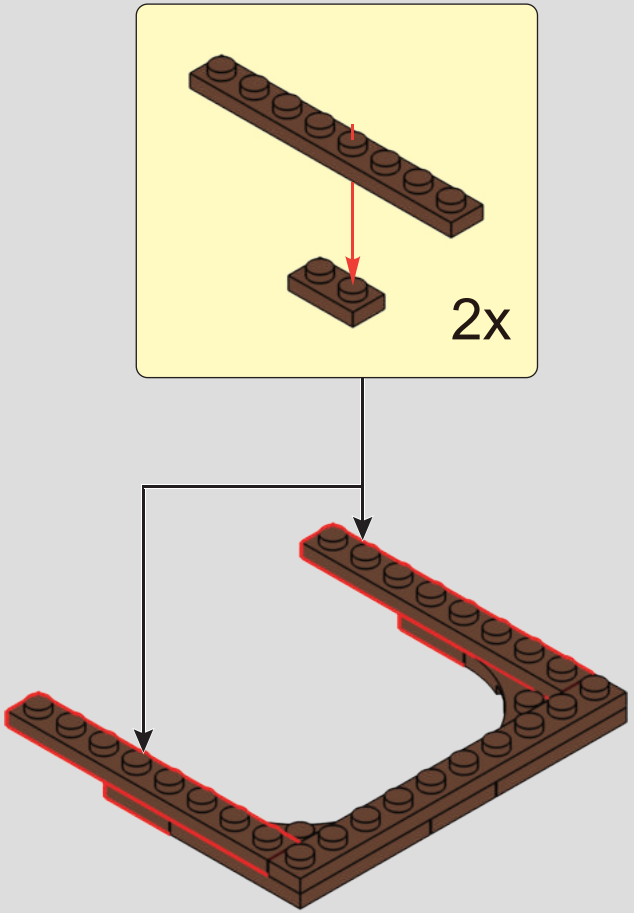

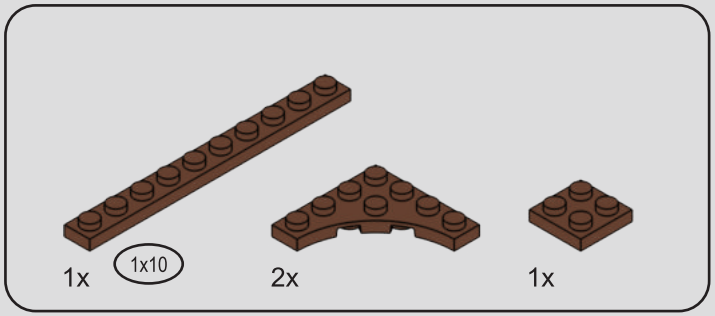

285

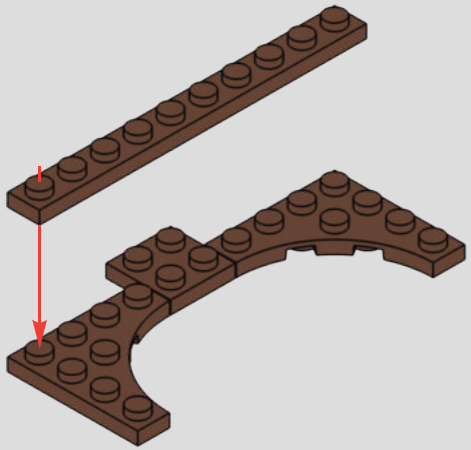

286

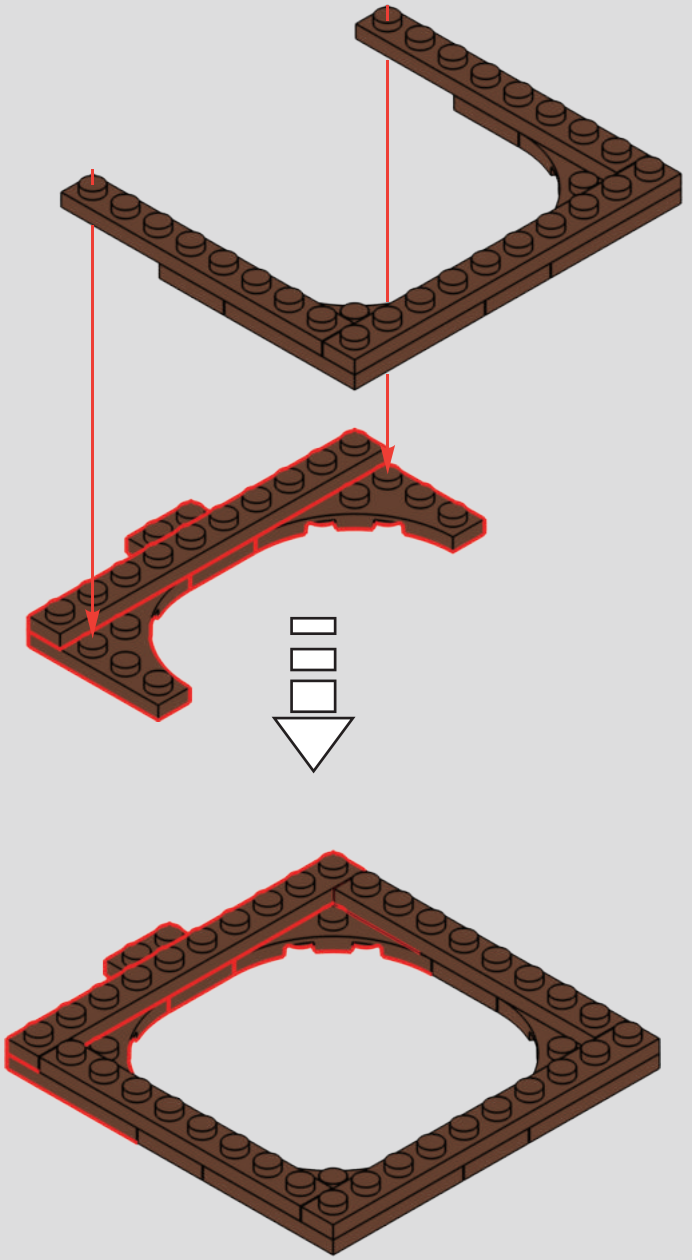

287

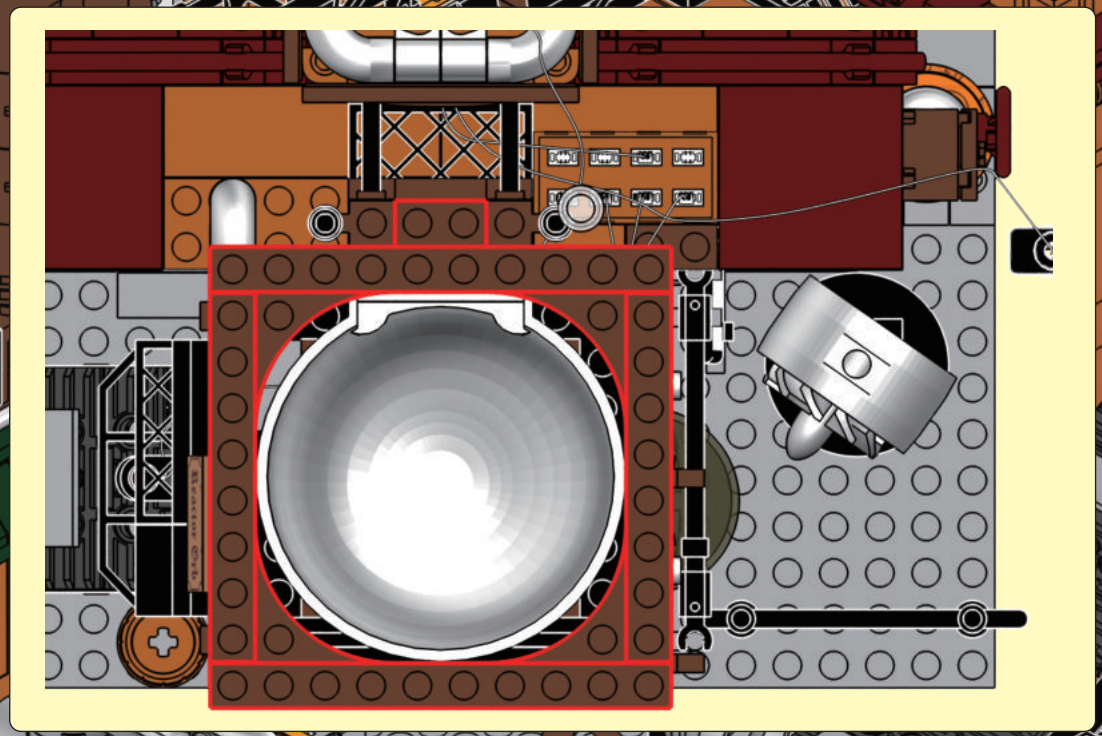

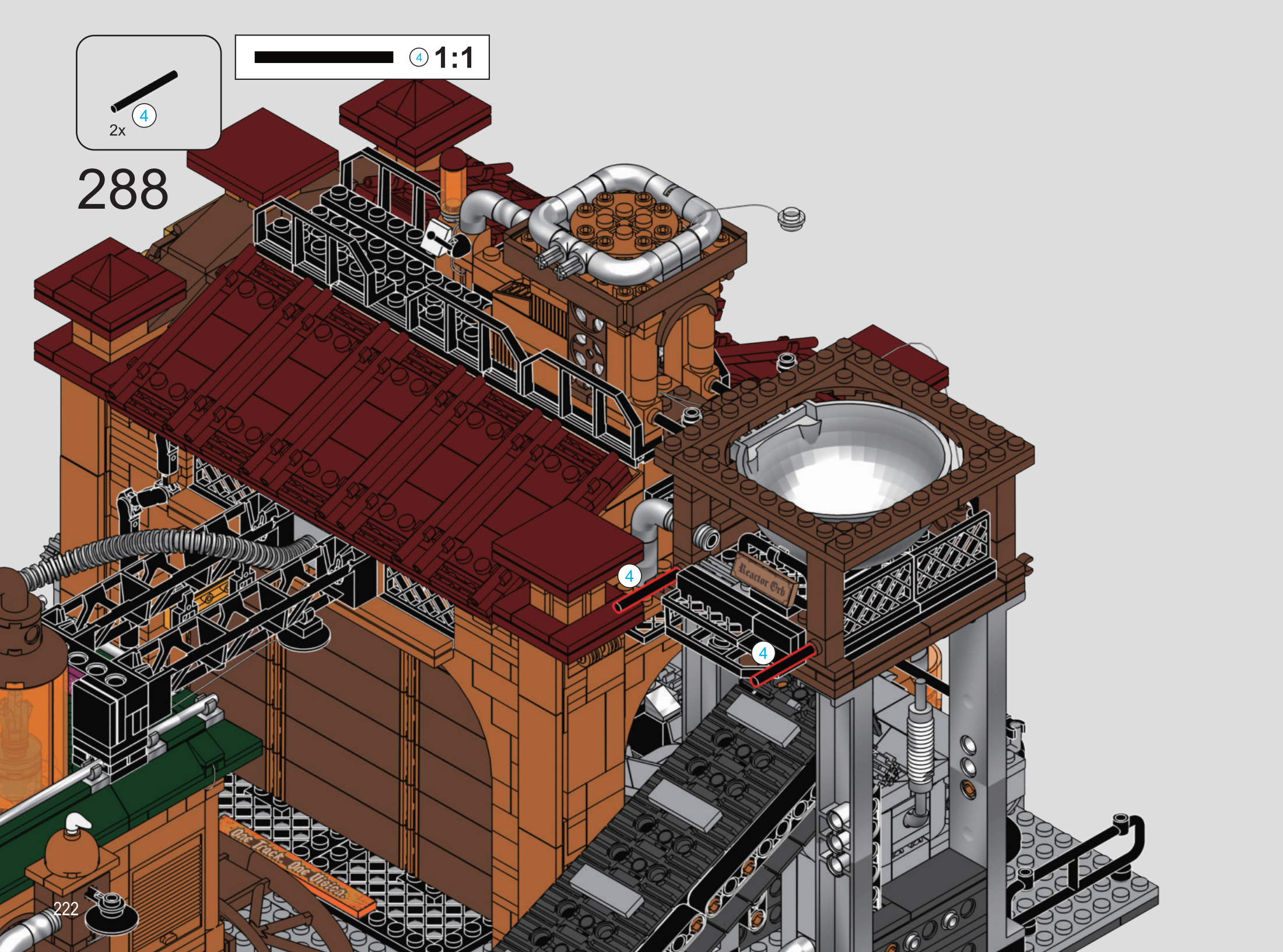
4
2x
4 1:1
288
4
4
Reactor Orb
One Track. One Vision.

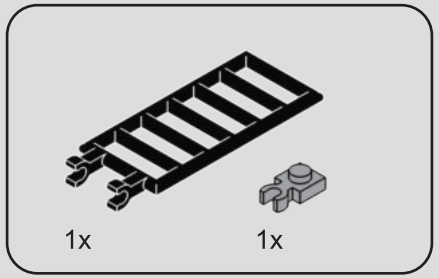

289

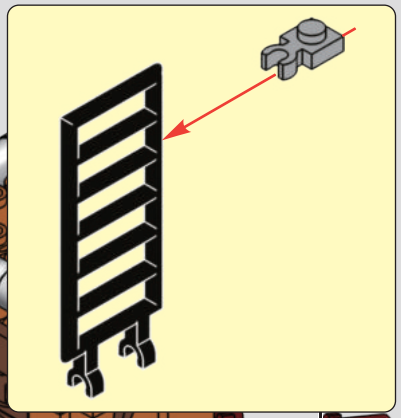

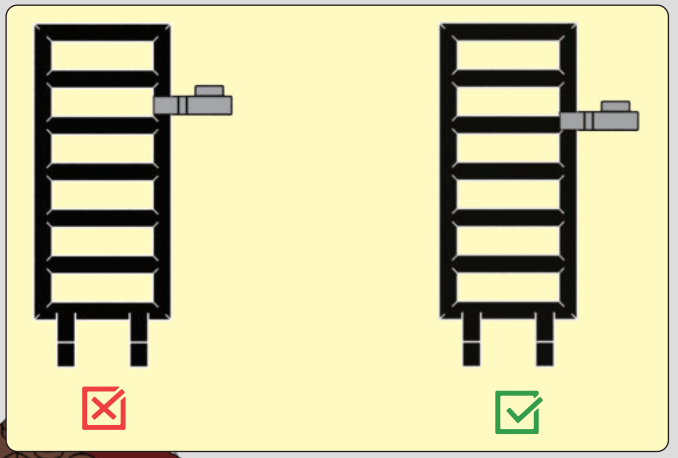

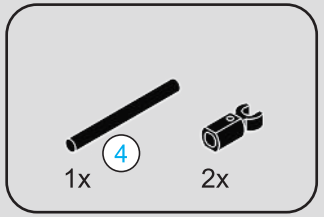

290

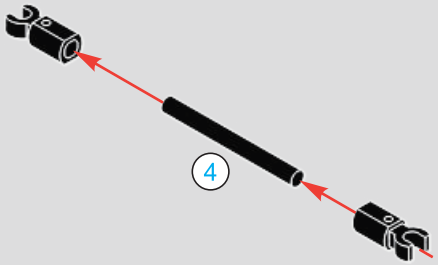

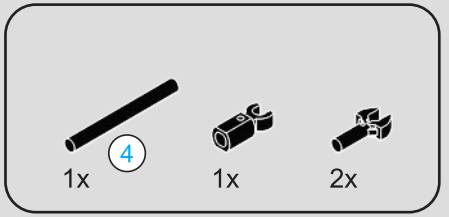

291

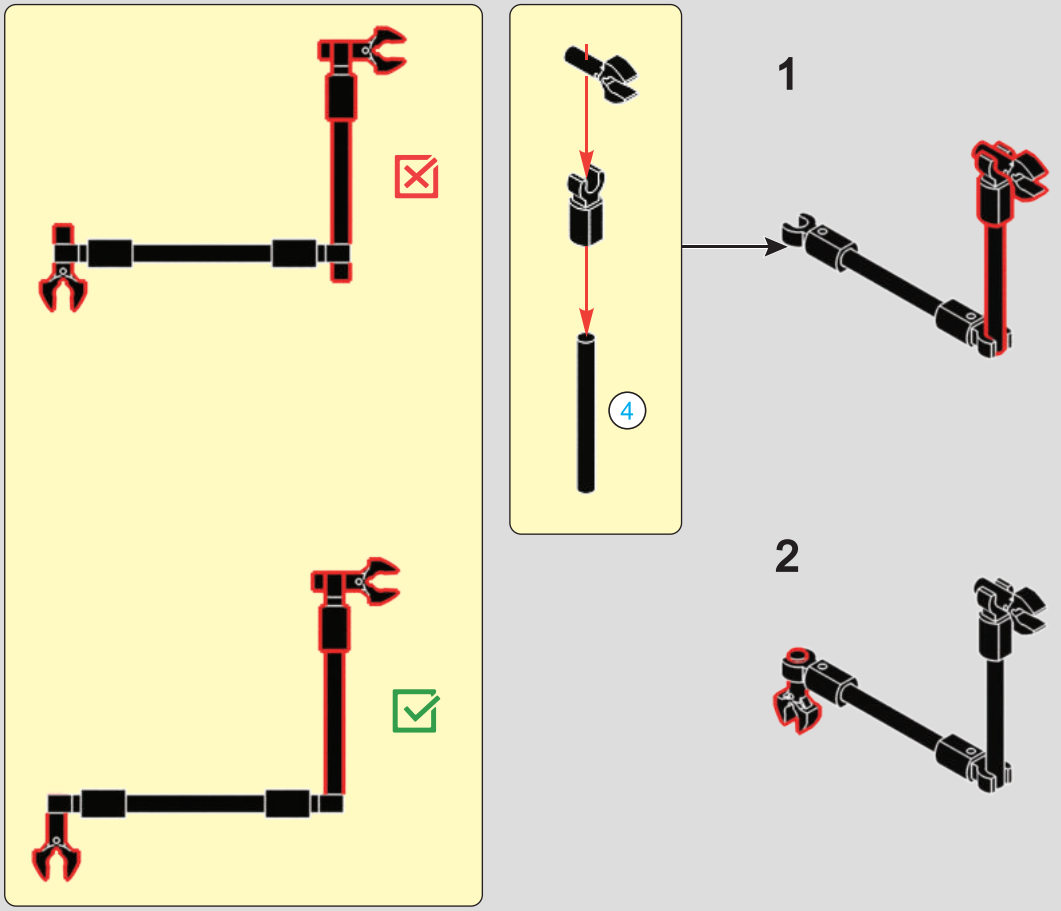

4 1:1

4 1:1

292

1

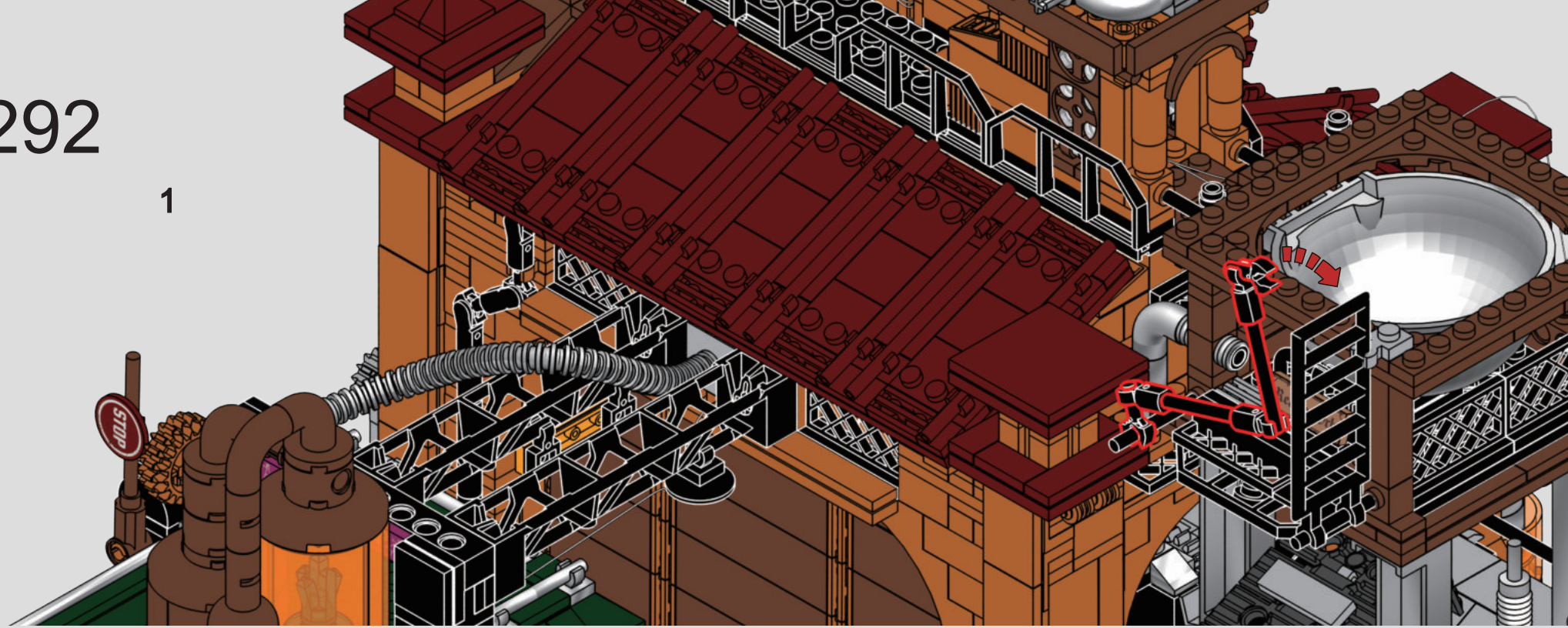

2

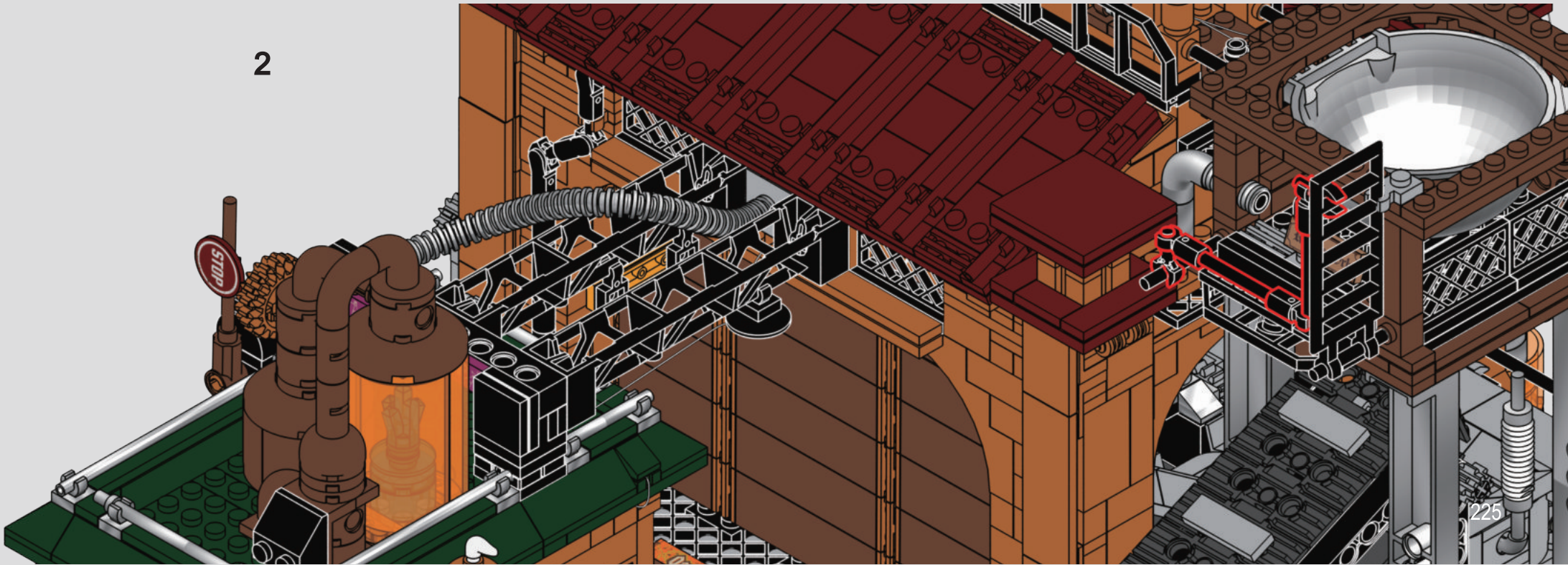

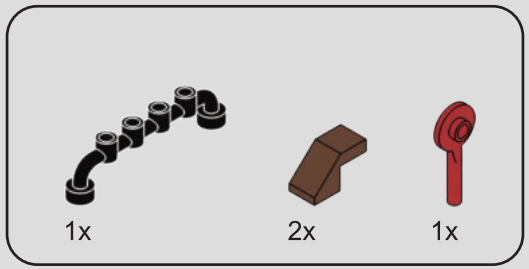

293

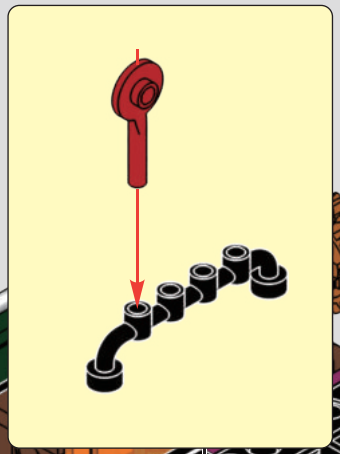

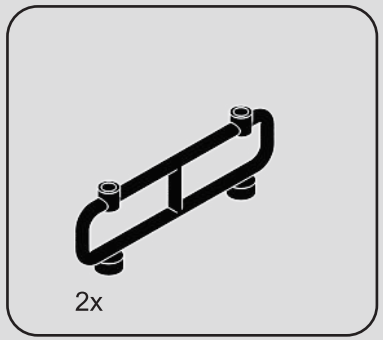

294

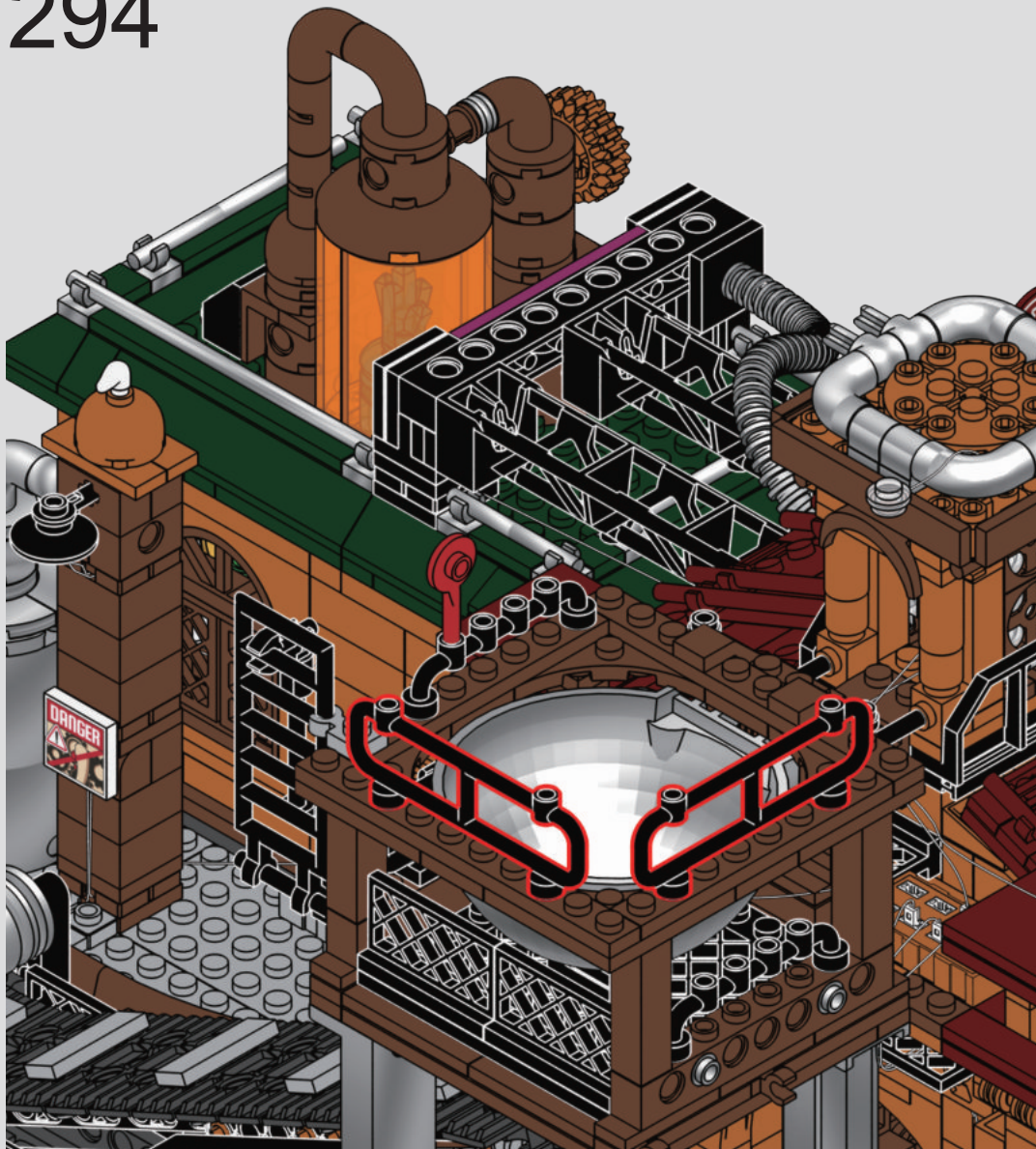

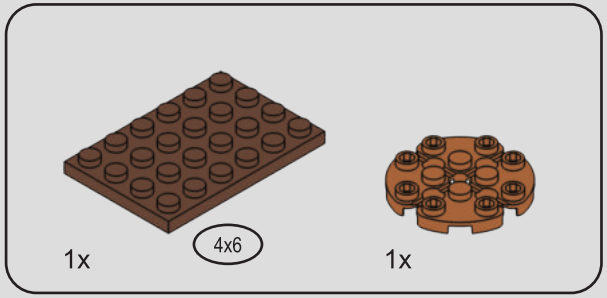

295

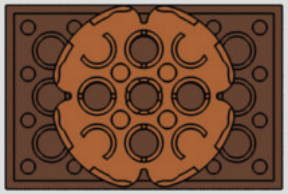

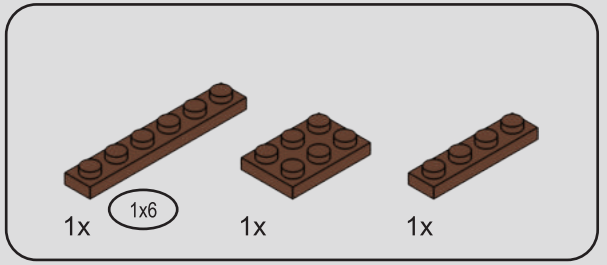

296

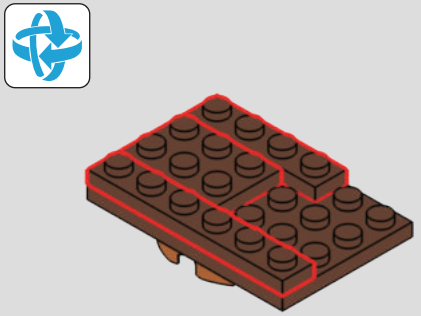

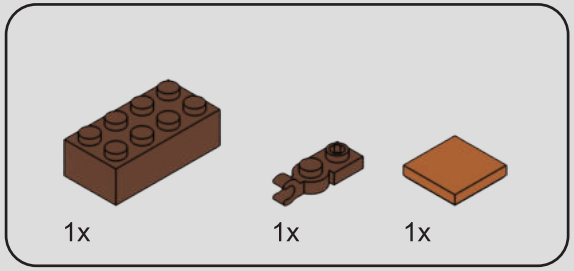

297

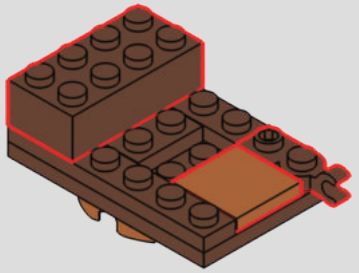

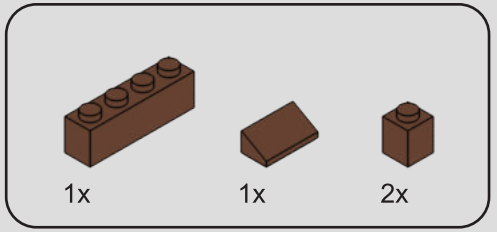

298

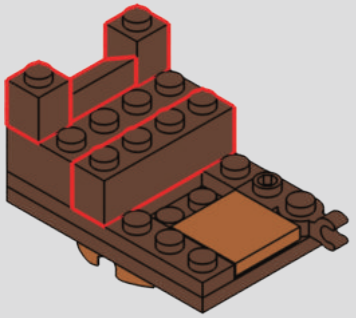

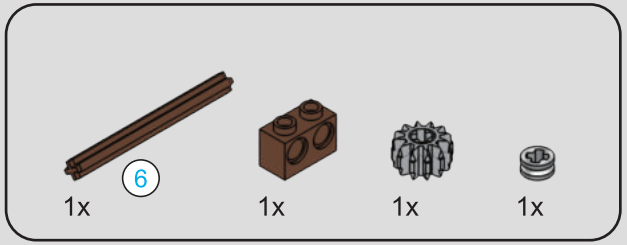

299

1

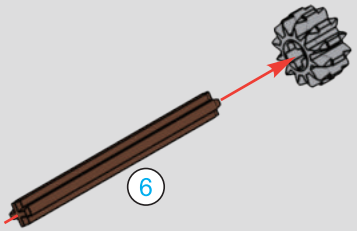

2

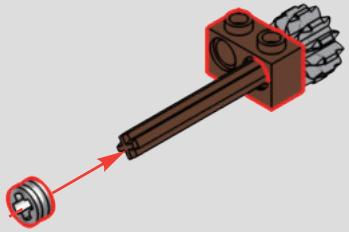



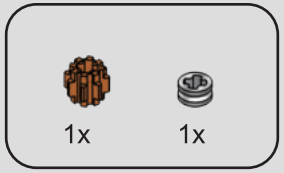



300

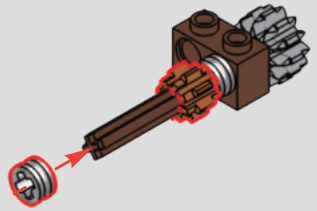

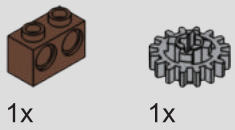

301

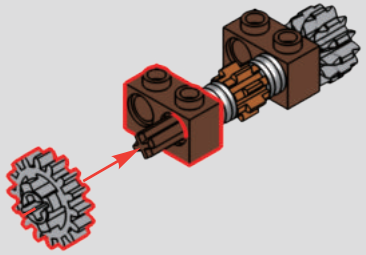

302

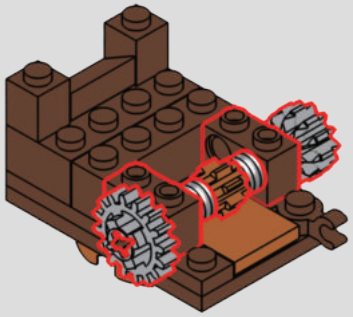

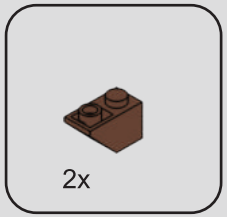

303

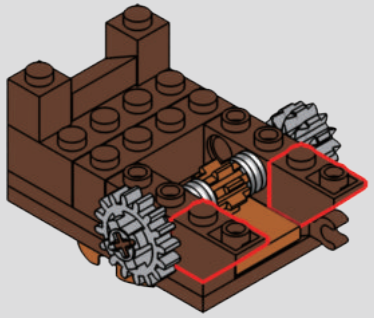

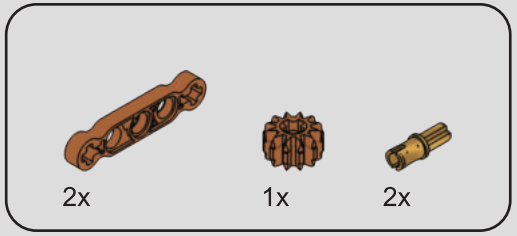

304

1

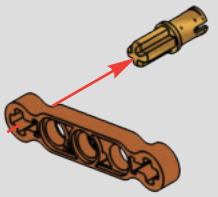

2



3

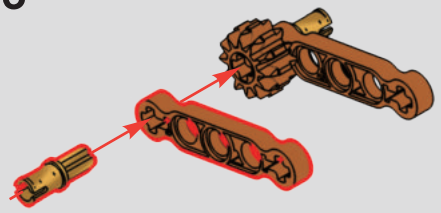

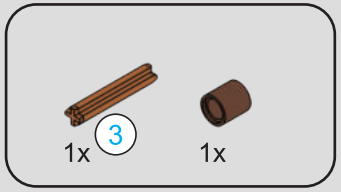



305

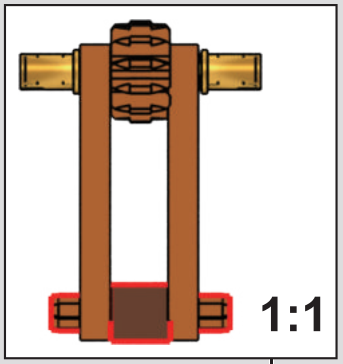

1

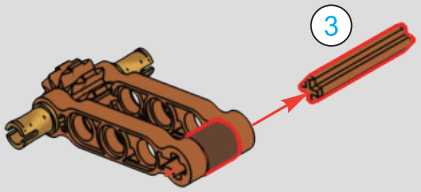

2

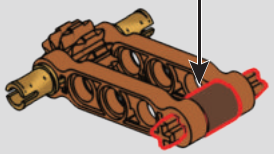

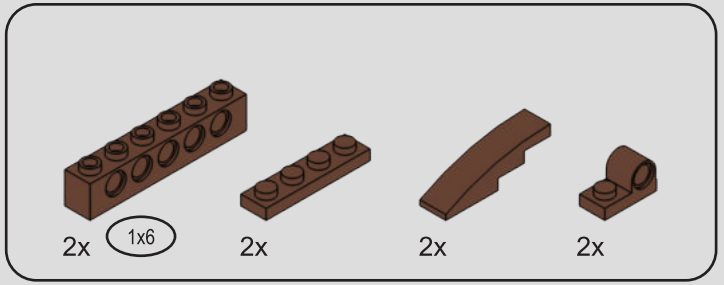

306

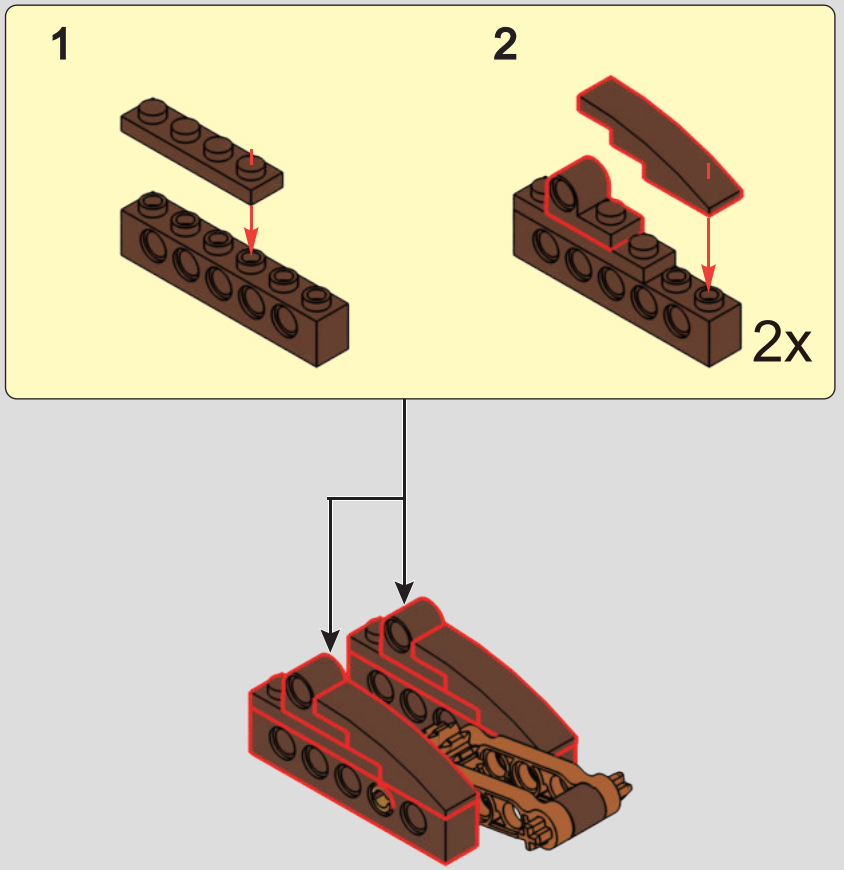

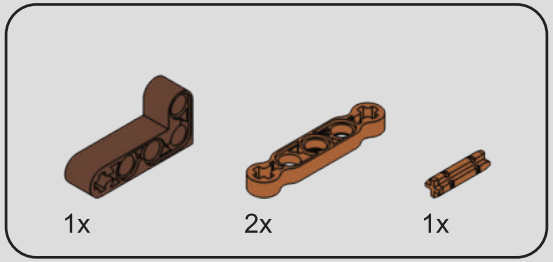

307

1

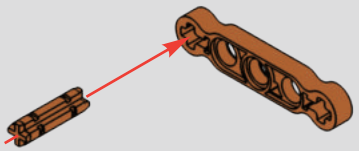

2

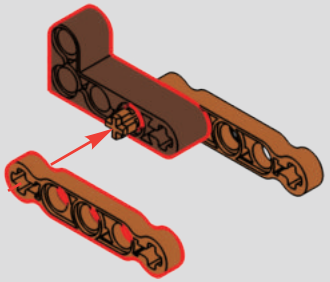

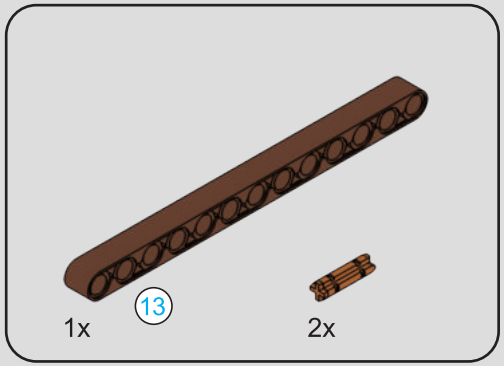

308

1

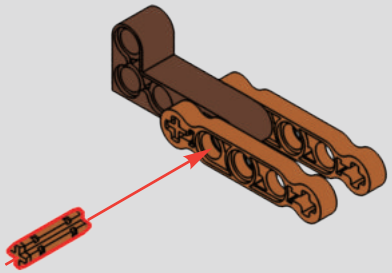

2

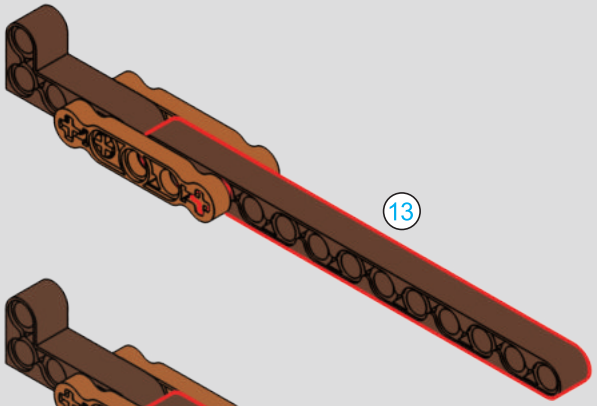

3

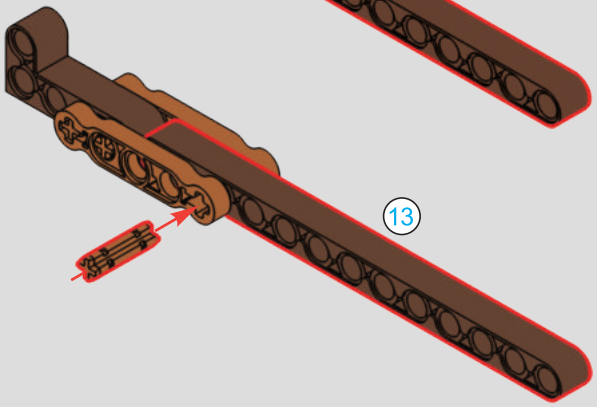



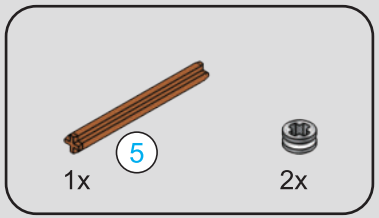

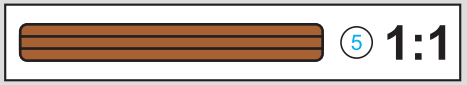

309

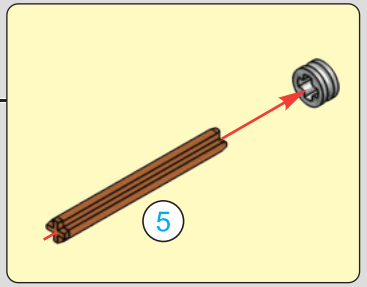

1

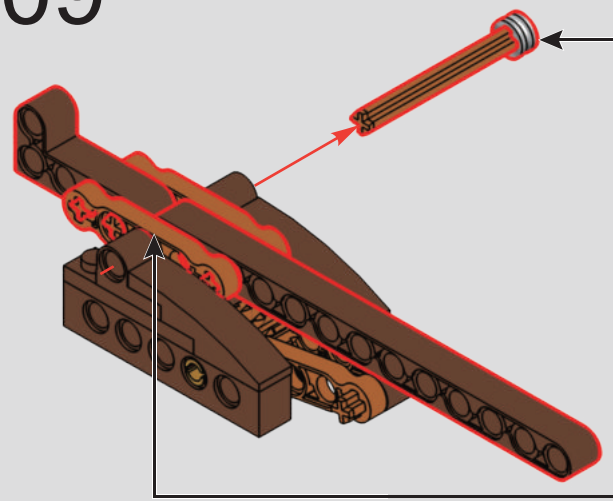

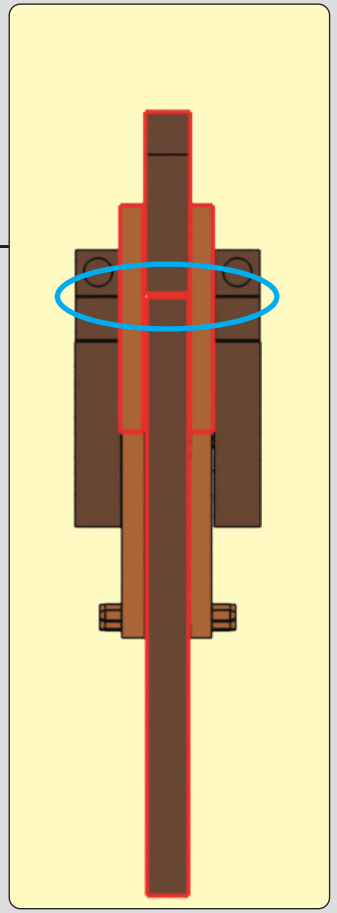

2

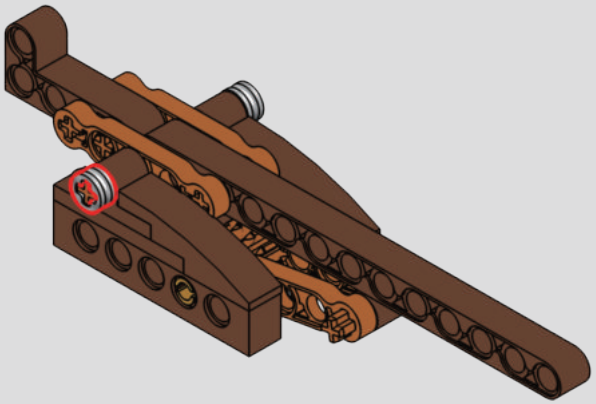

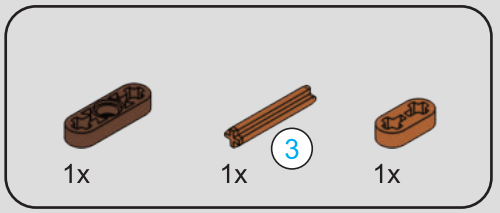

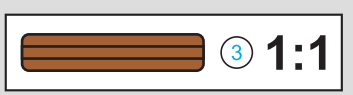

310

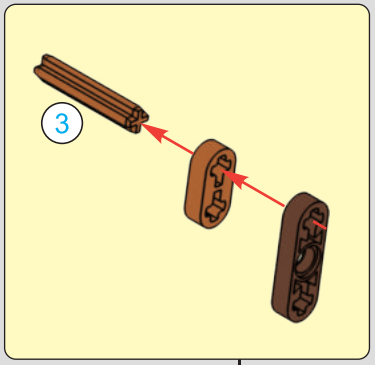



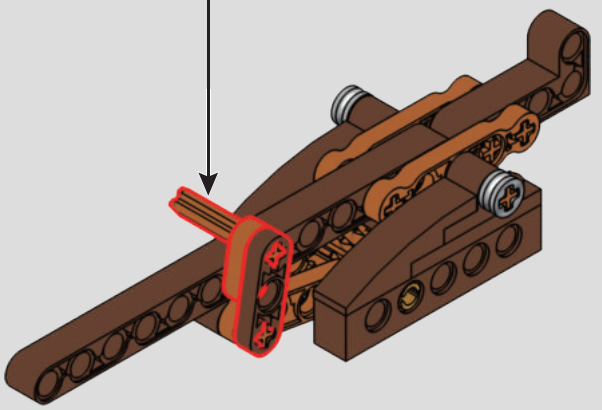

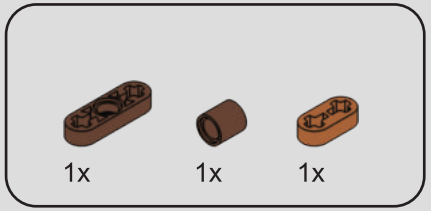

311

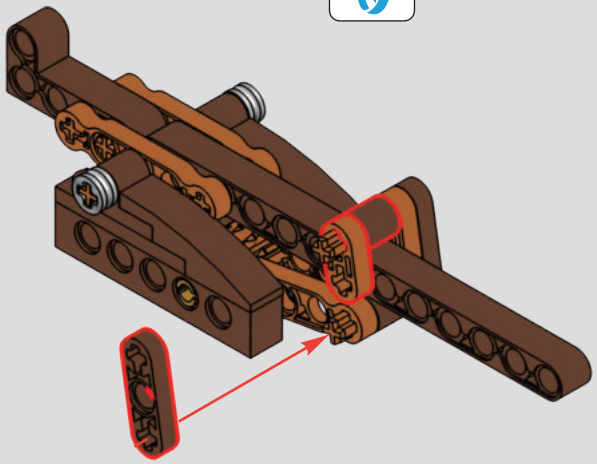

312

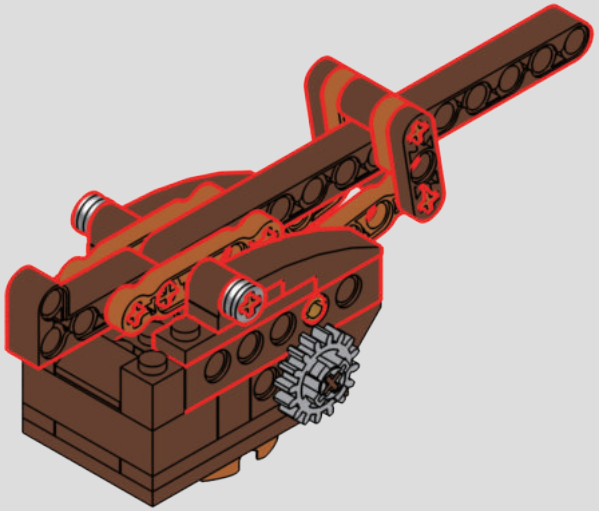

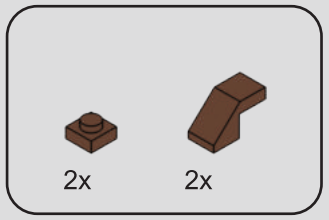

313

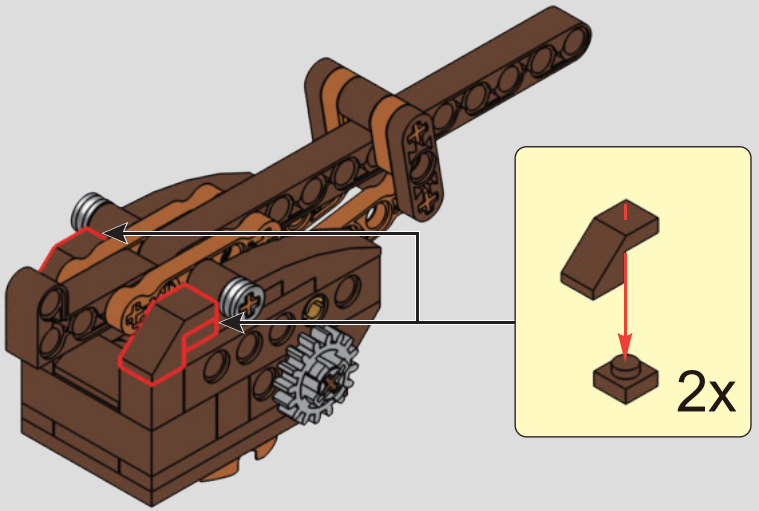

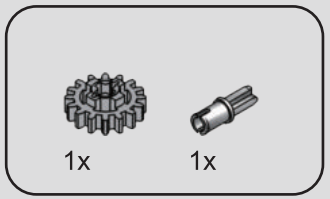

314

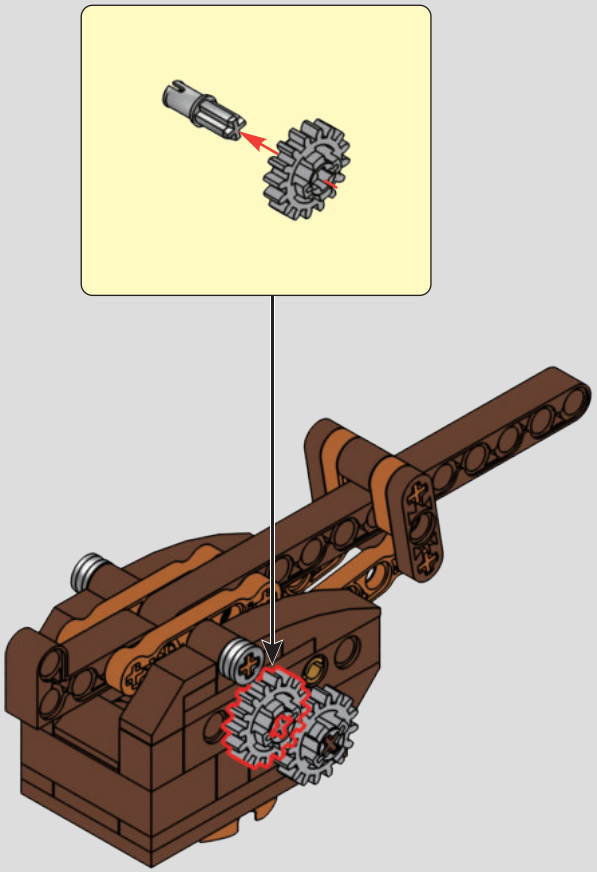

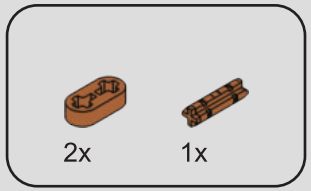

315

1

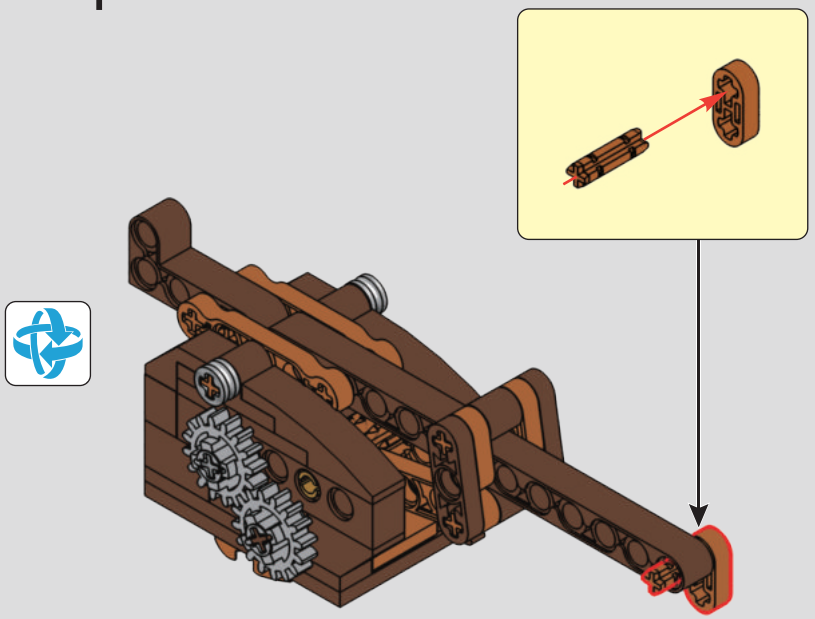

2

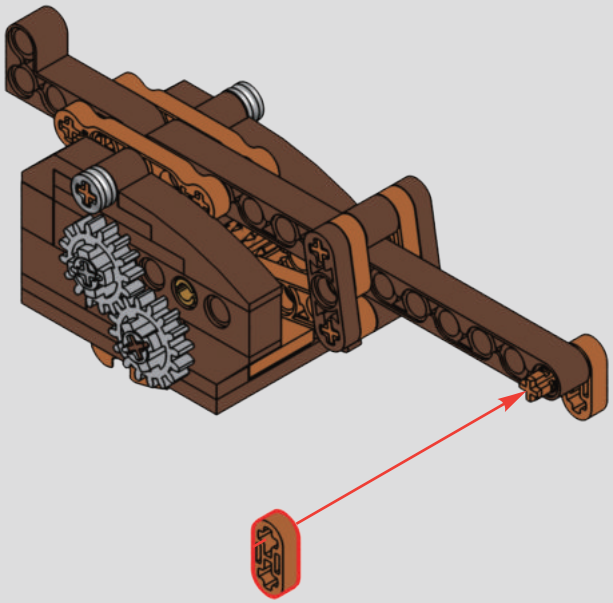

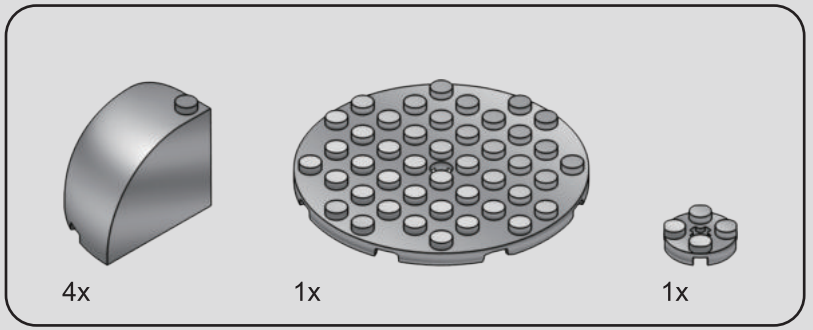

316

1

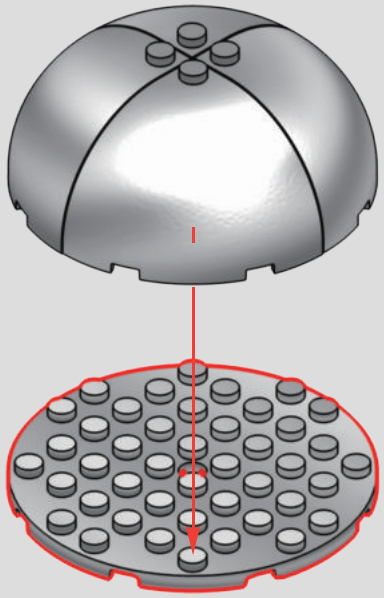

2

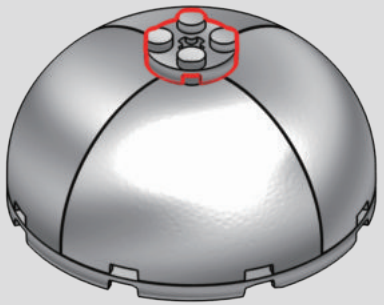

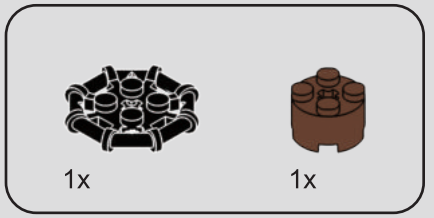

317

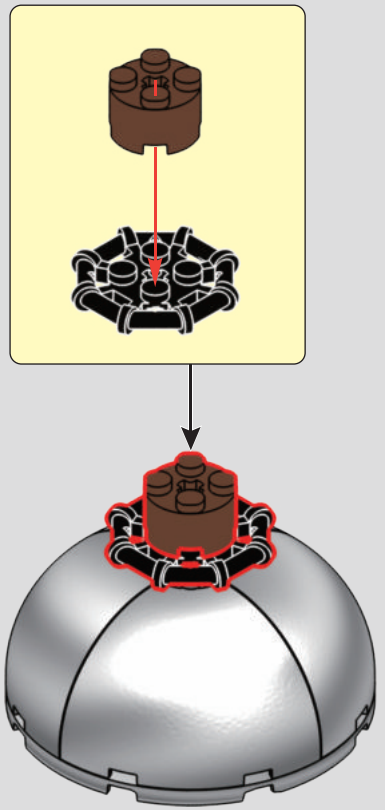

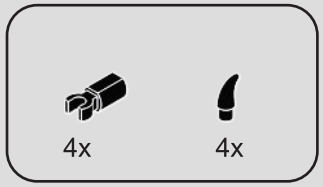

318

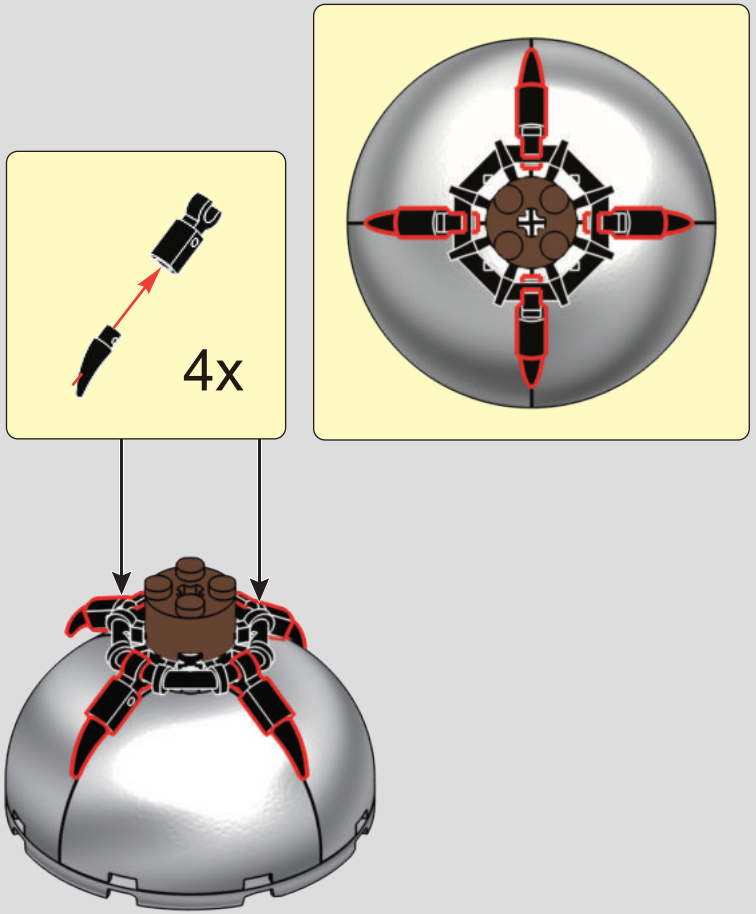

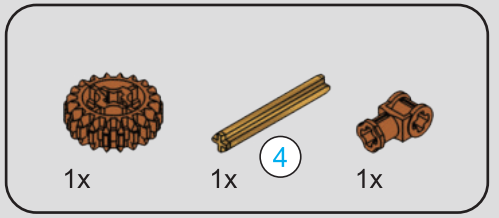



319

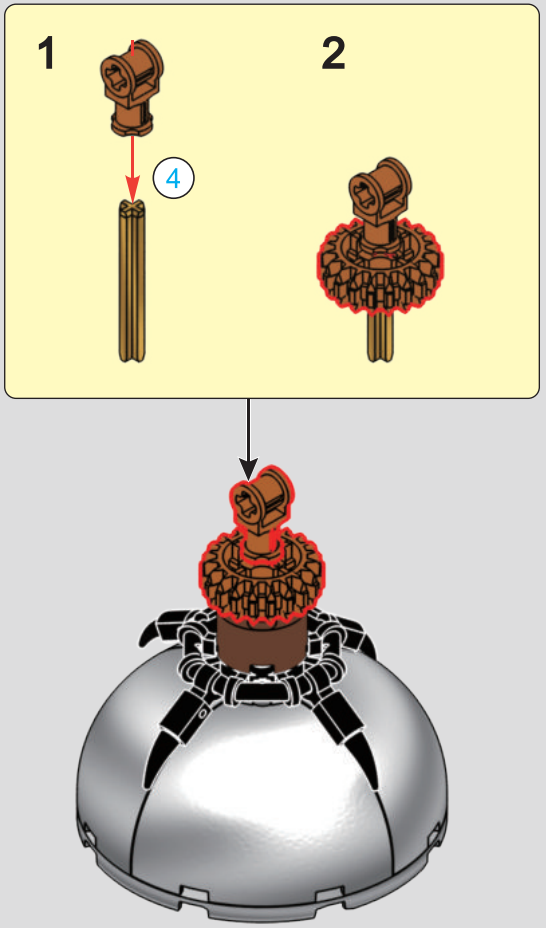

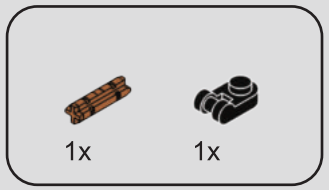

320

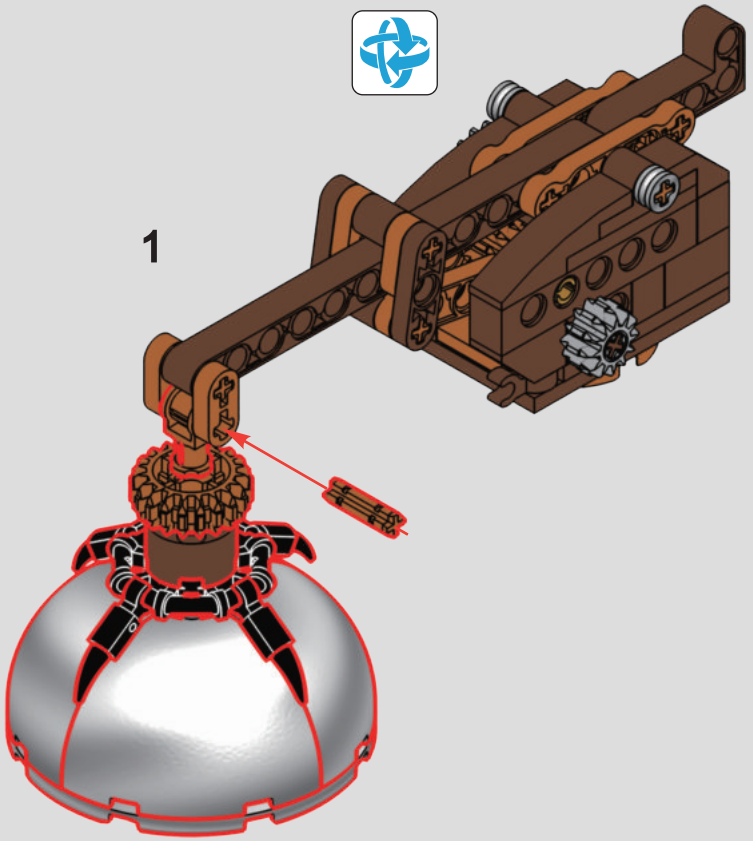

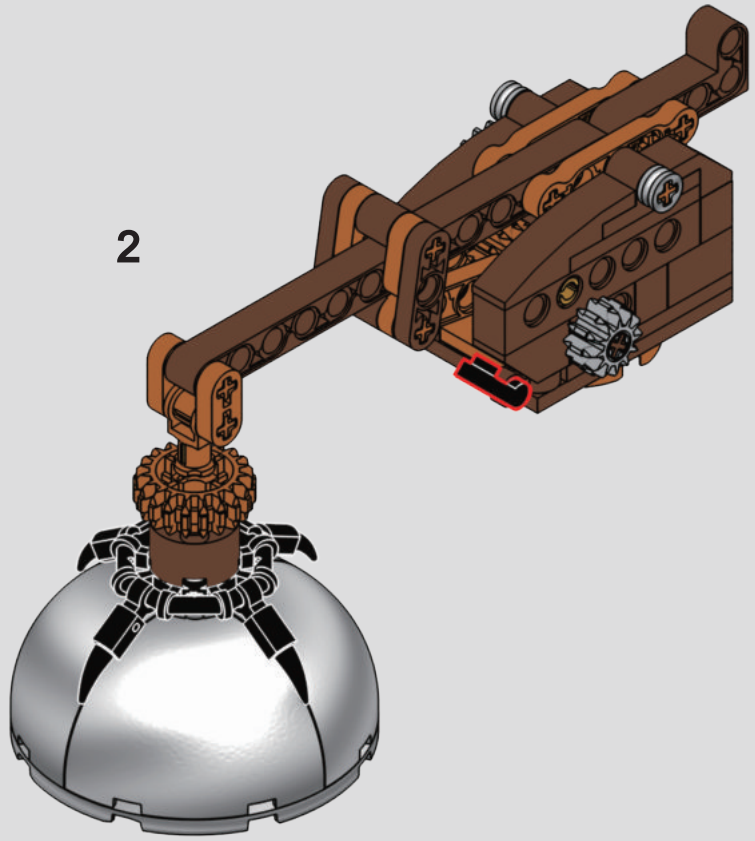

321

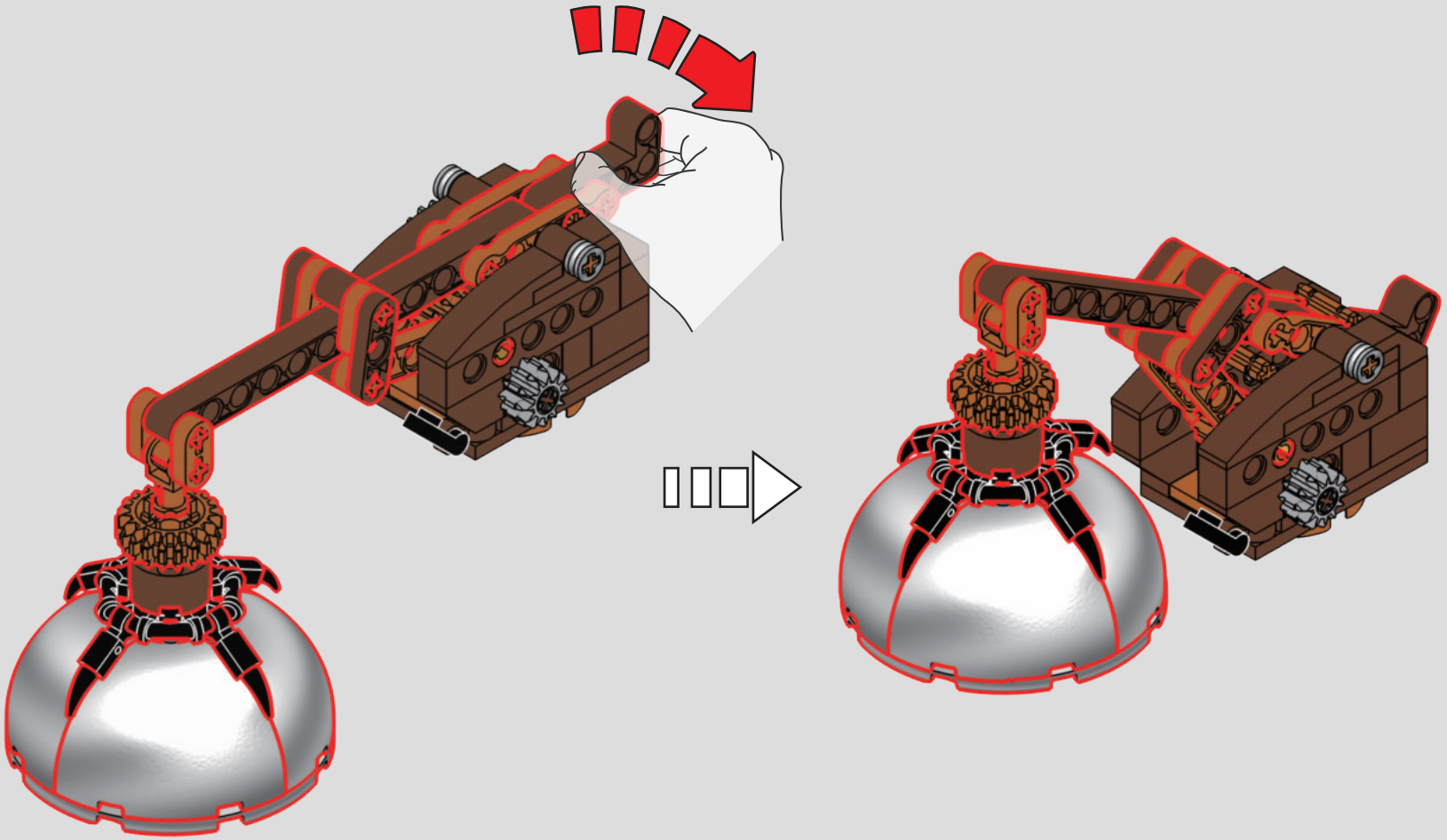

322



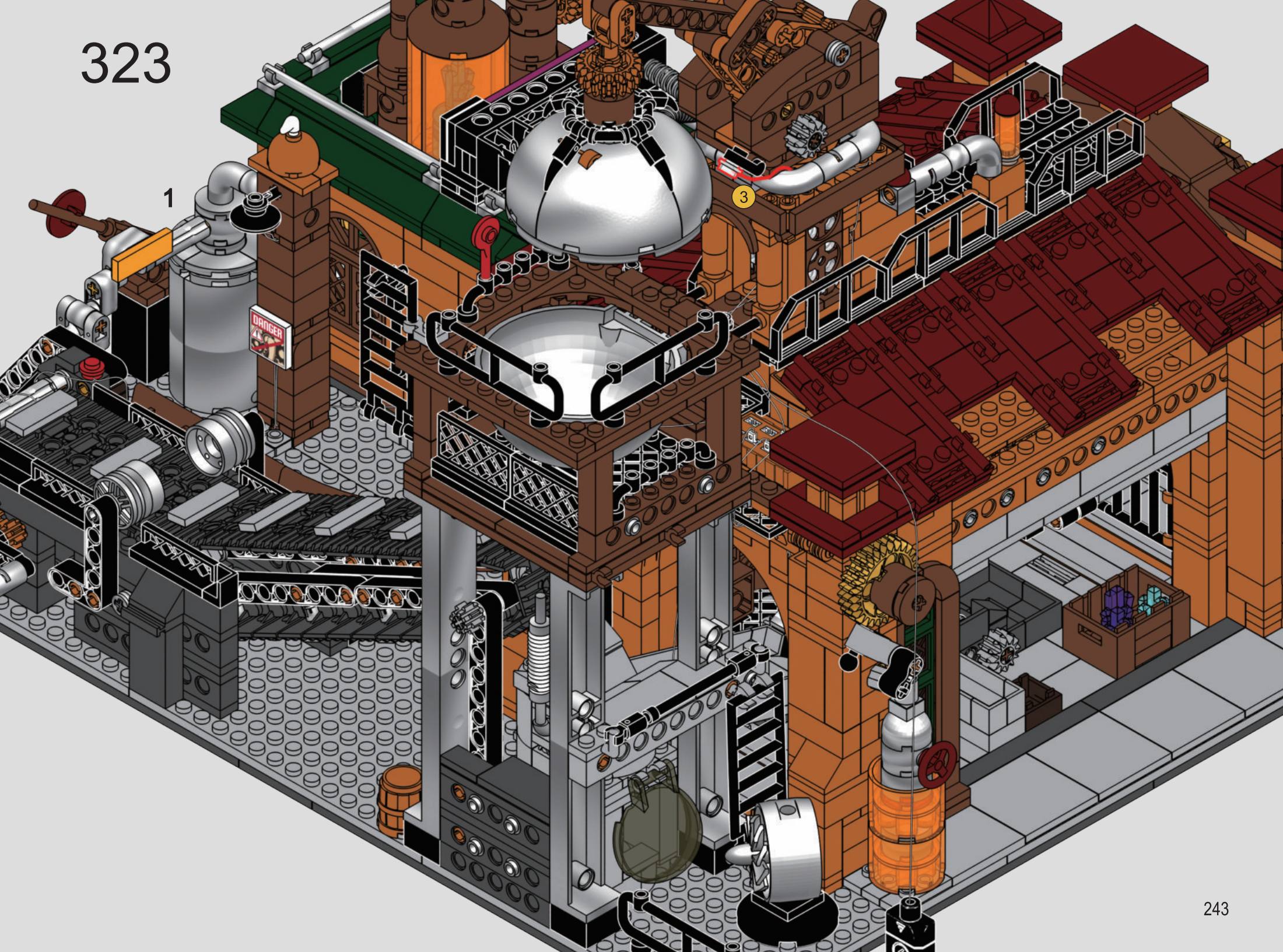
1
3
DANGER

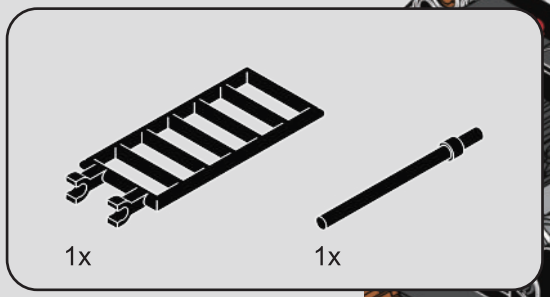

324

1

2

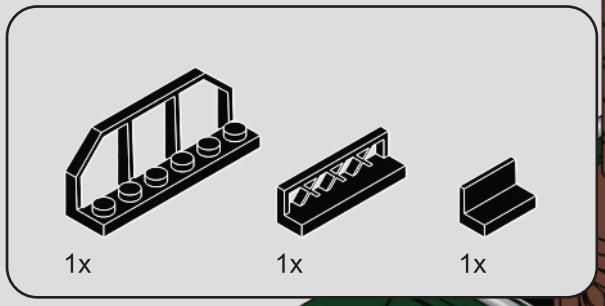

325

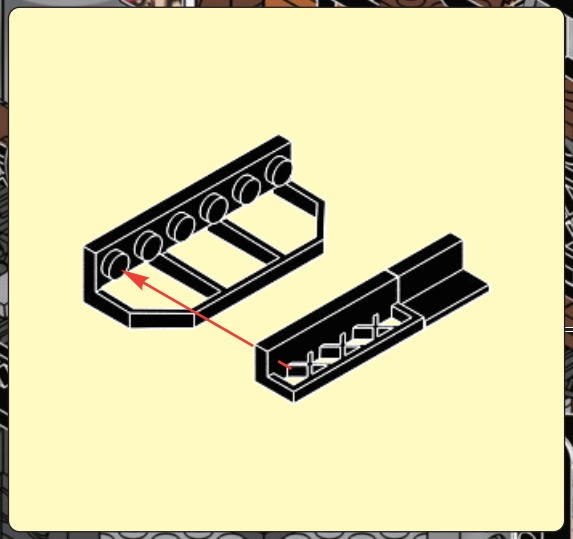

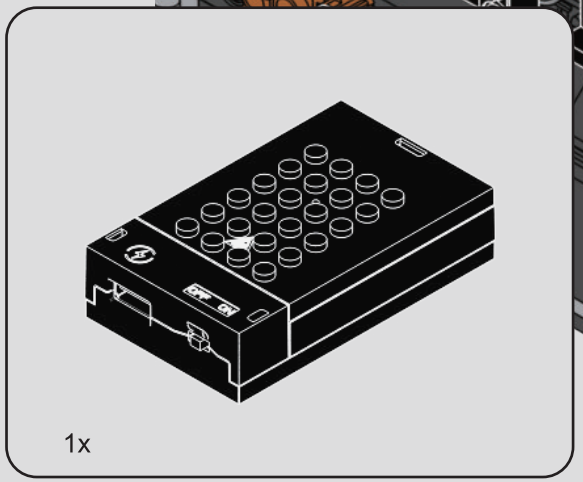

1x

326

1

100%

OFF ON

OFF ON

AA

AA

AA

本产品不包含电池

This product does not include batteries

2

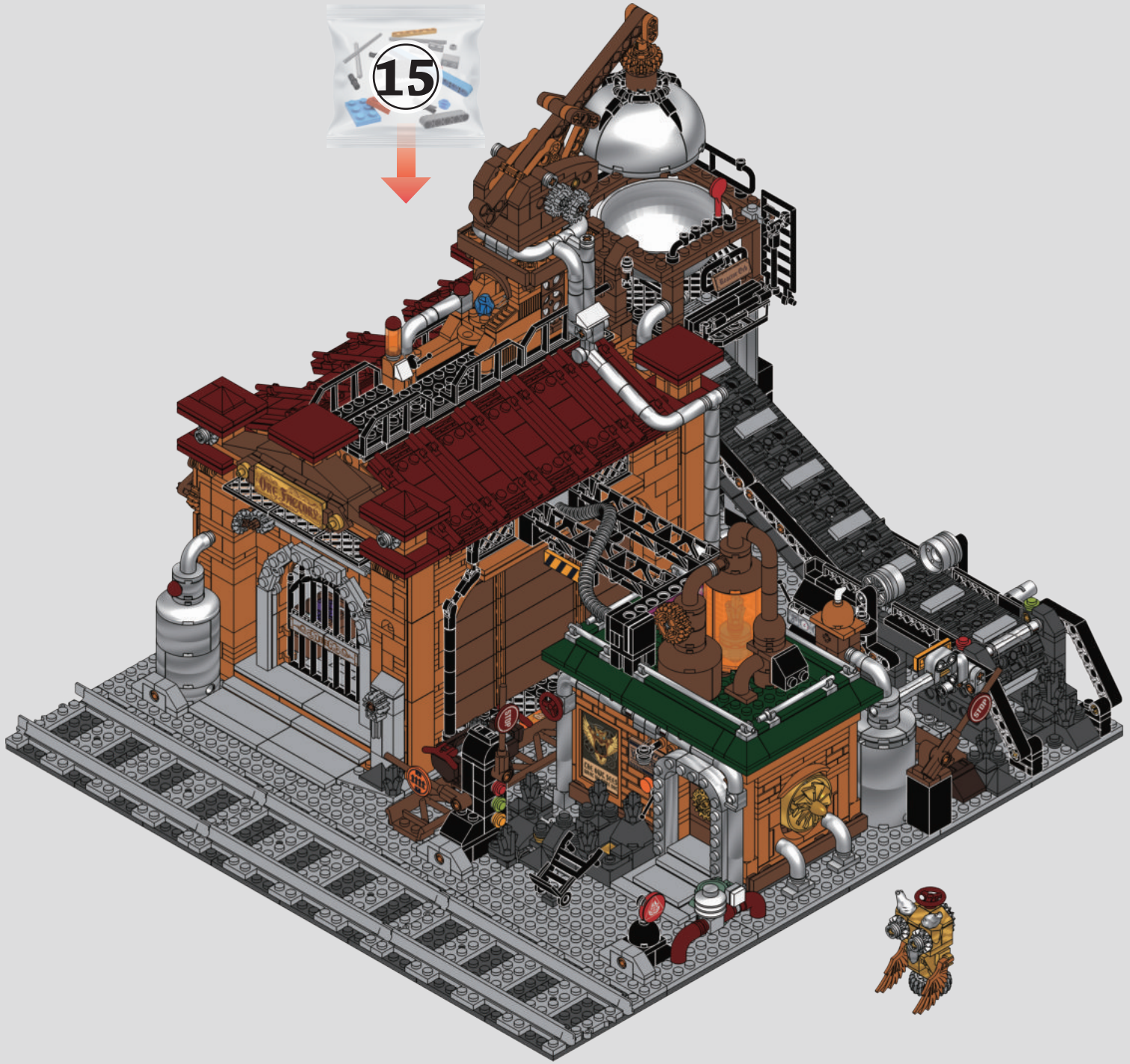
15

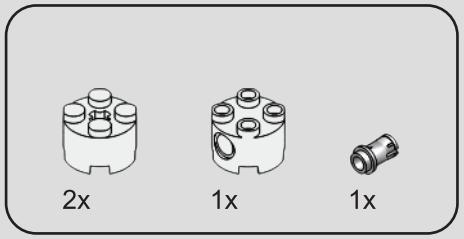

327

1

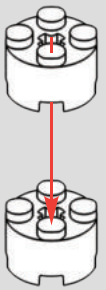

2

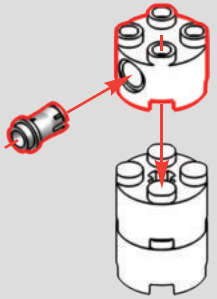

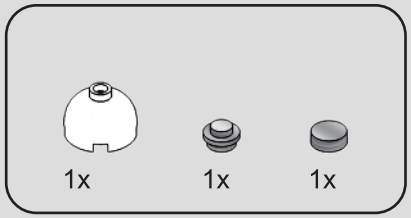

328



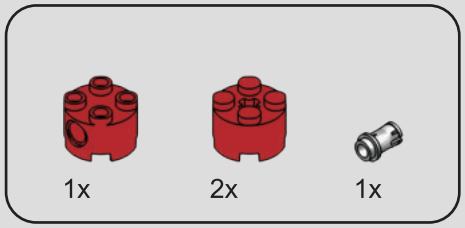

329

1

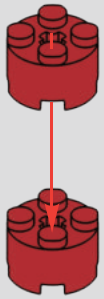

2

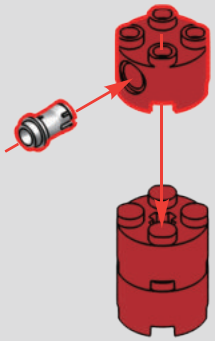

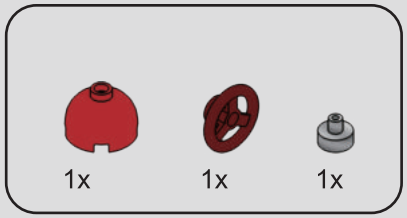

330

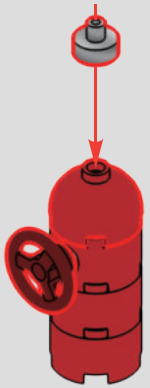

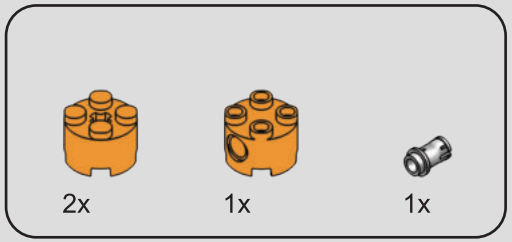

331

1

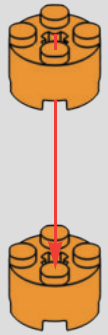

2

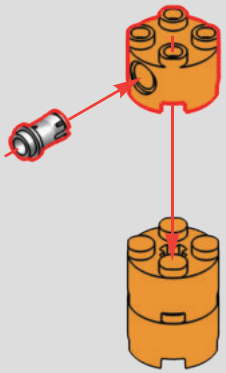

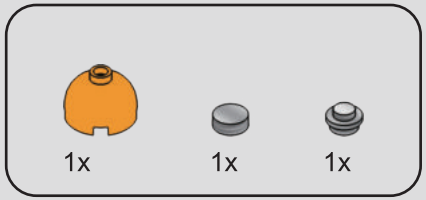

332

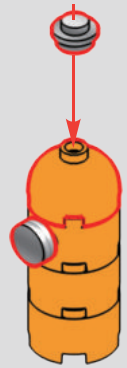

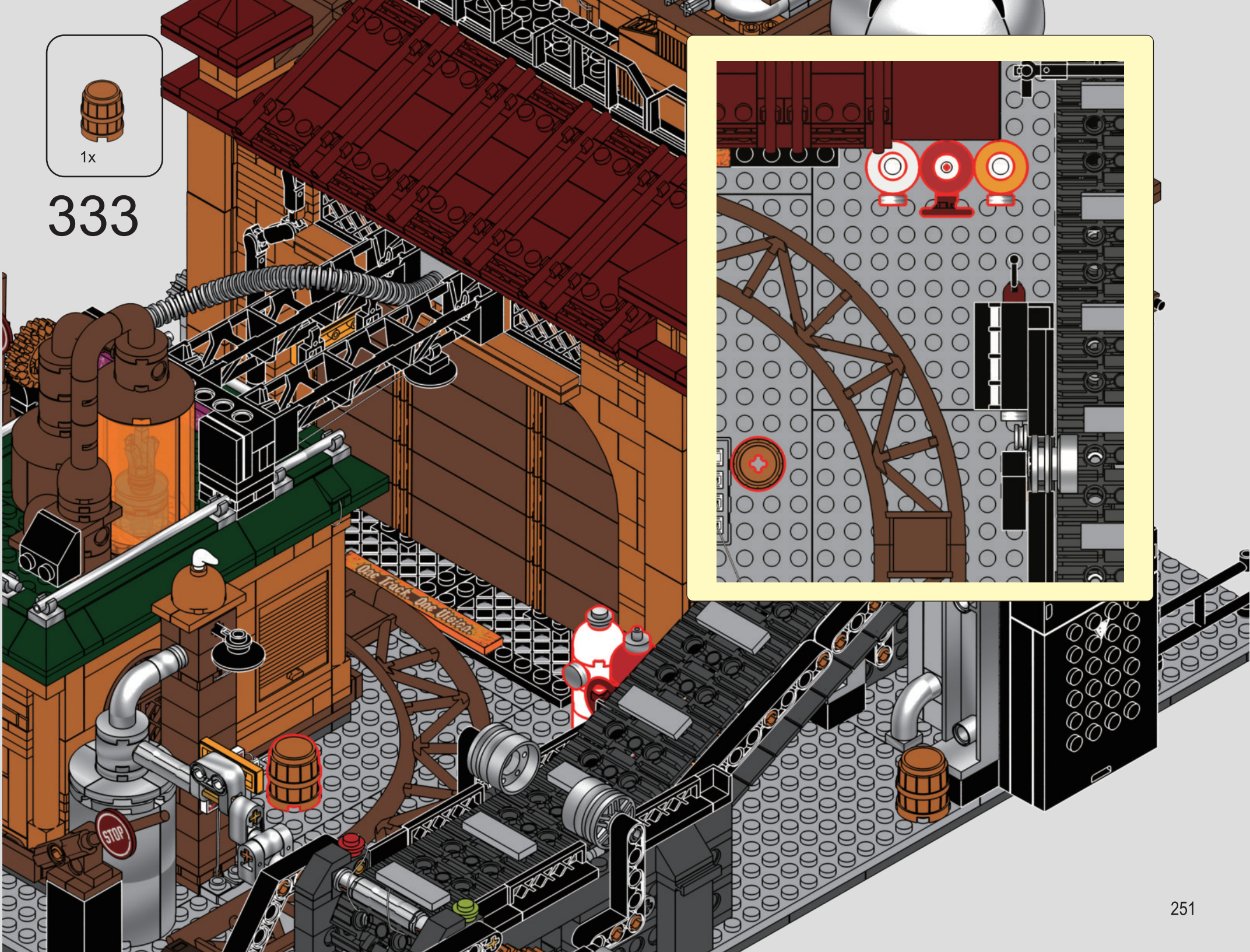
1x
333
One Track, One Vision
STOP

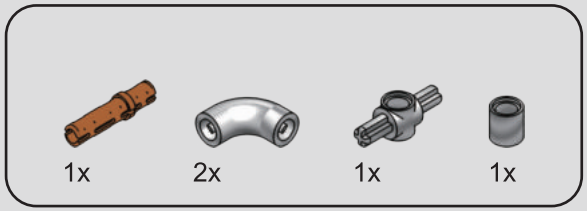

334

1

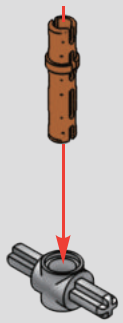

2

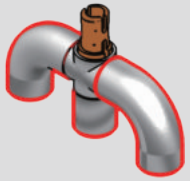

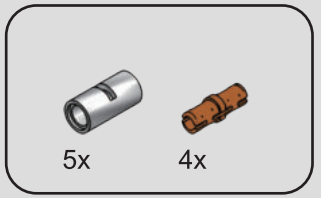

335

1



2



3



336

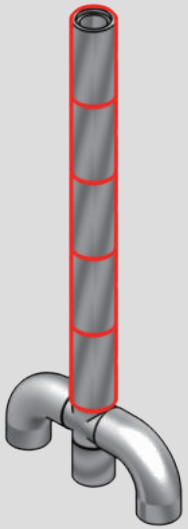

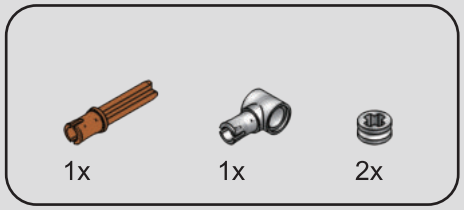

337

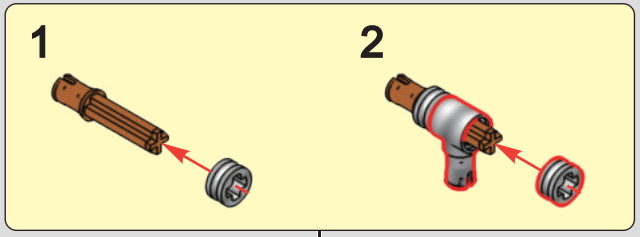

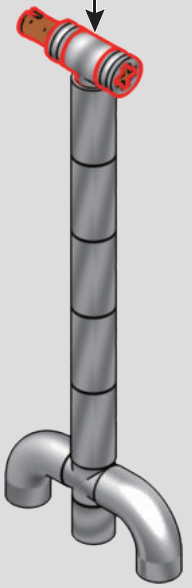

338



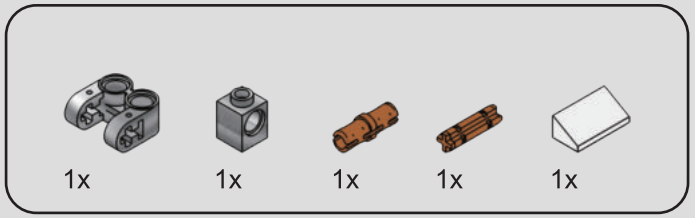

339

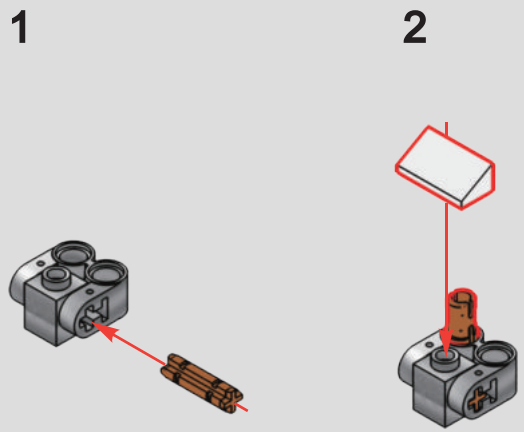

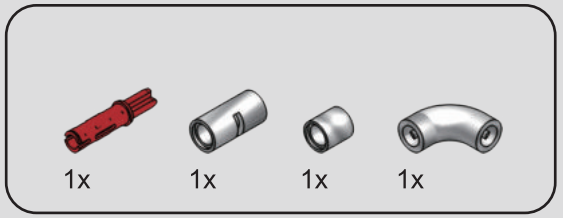

340

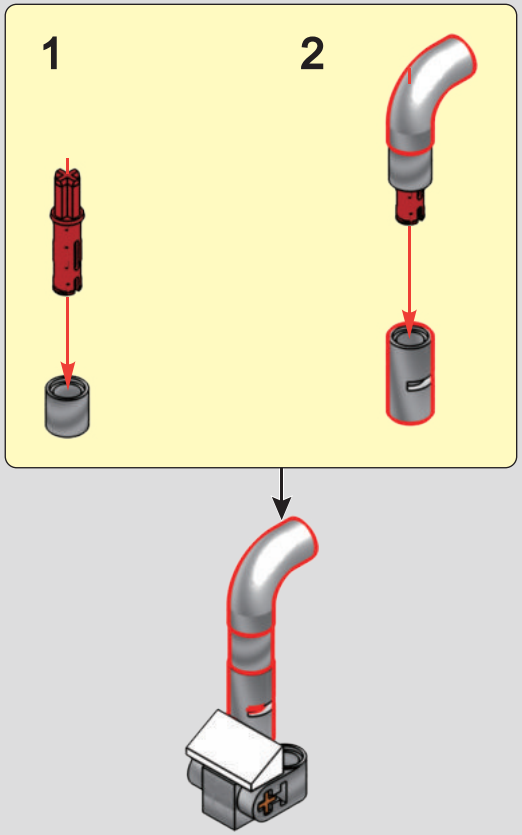

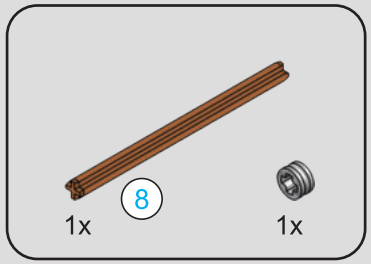

341

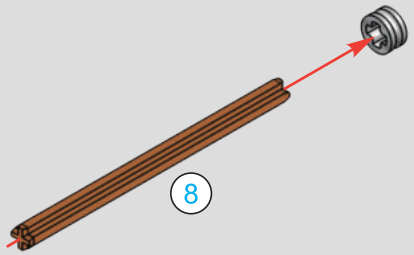



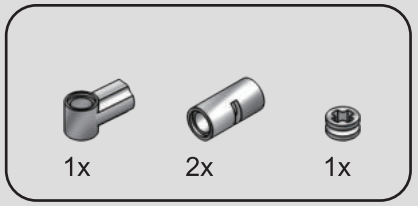

342

1

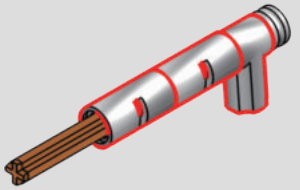

2

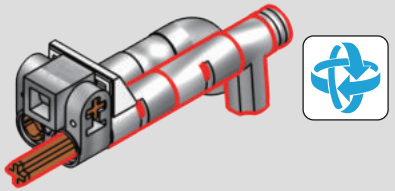

3

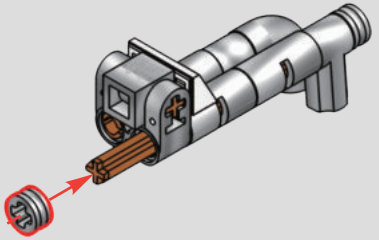

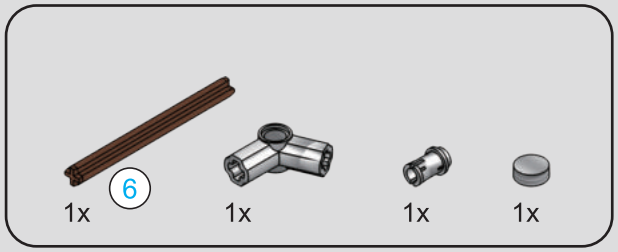

343

1

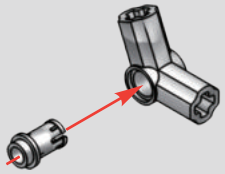

2

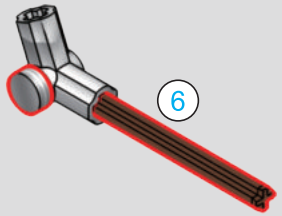



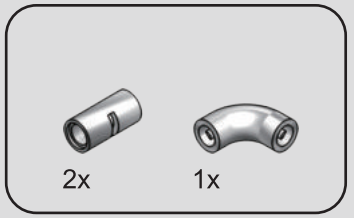

344

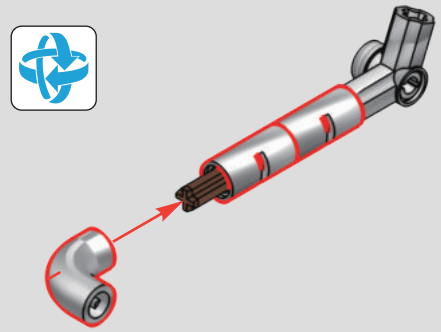

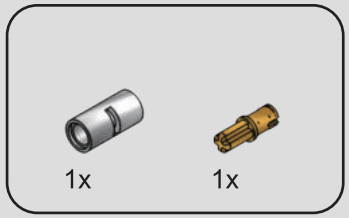

345

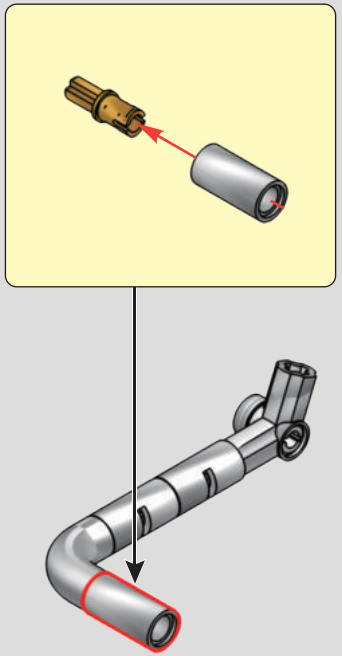

346

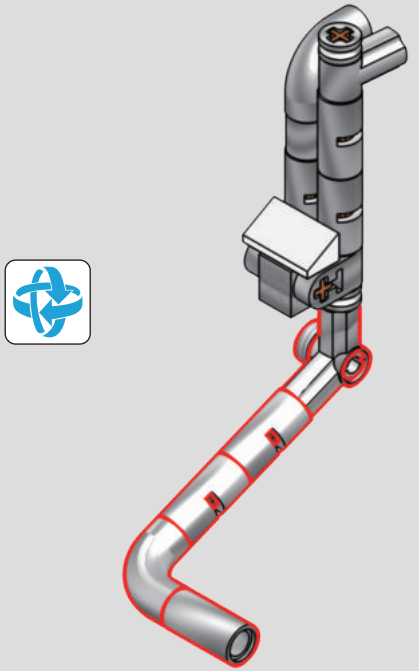

347

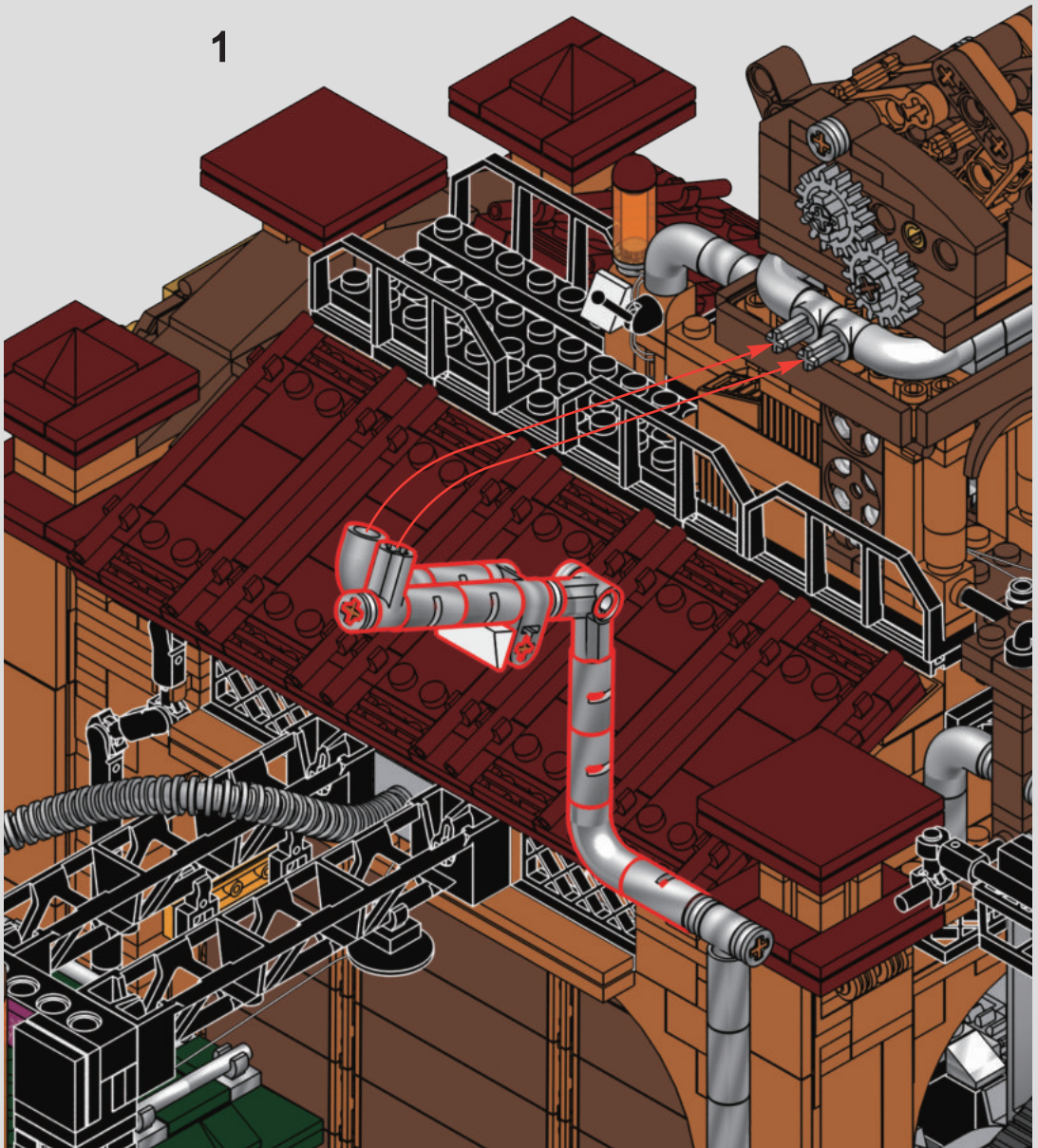

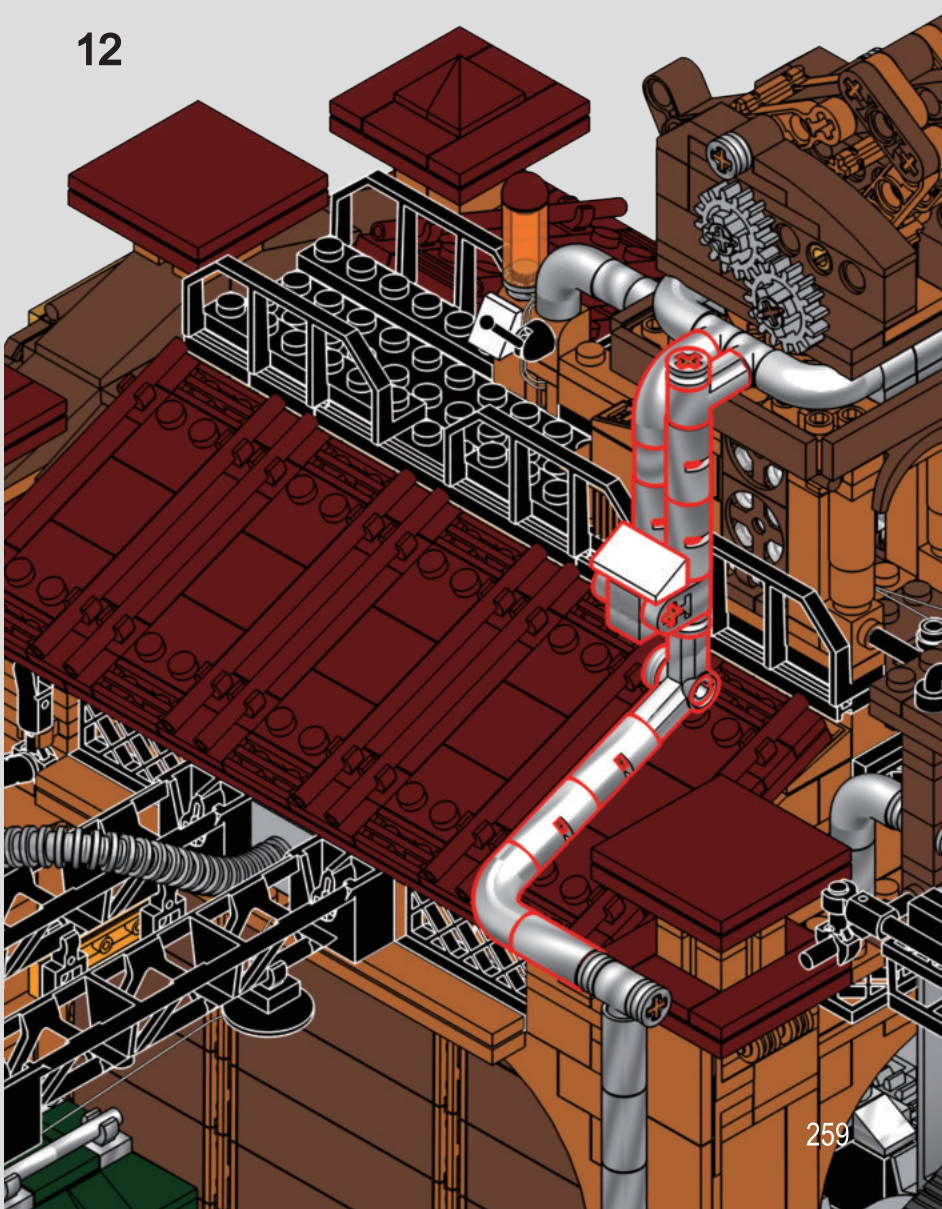



348

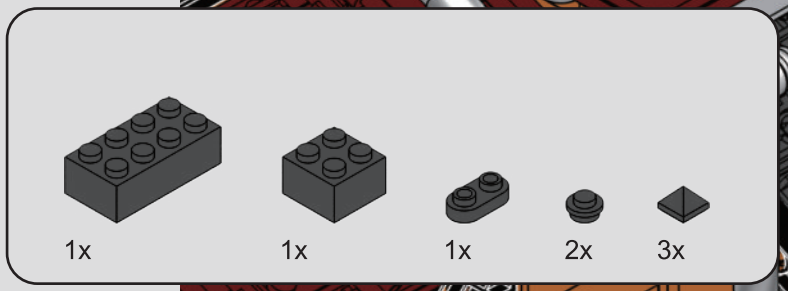

349

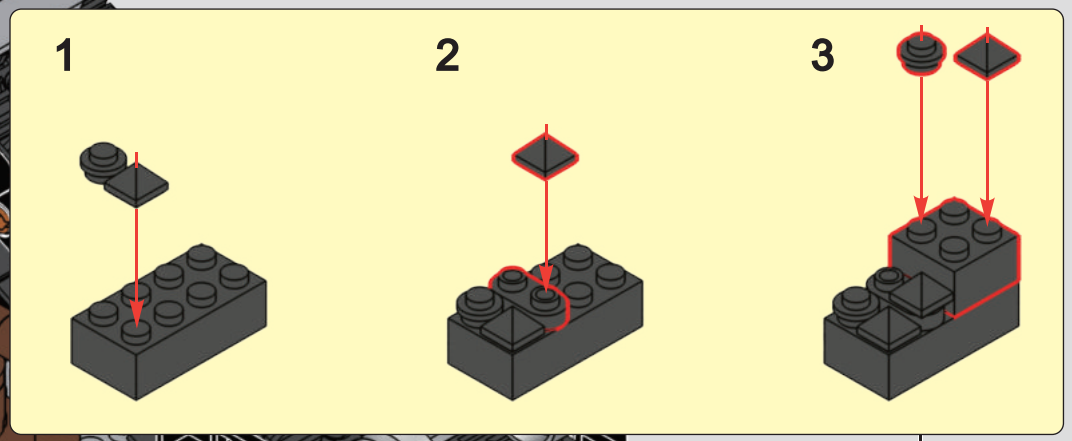


3x
350
STOP



351

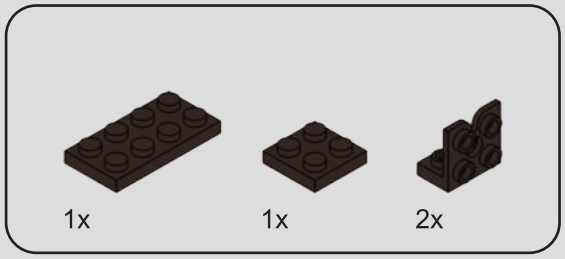

352

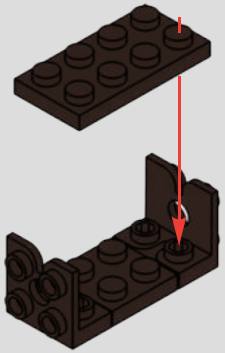

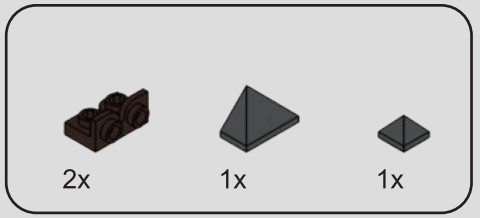

353

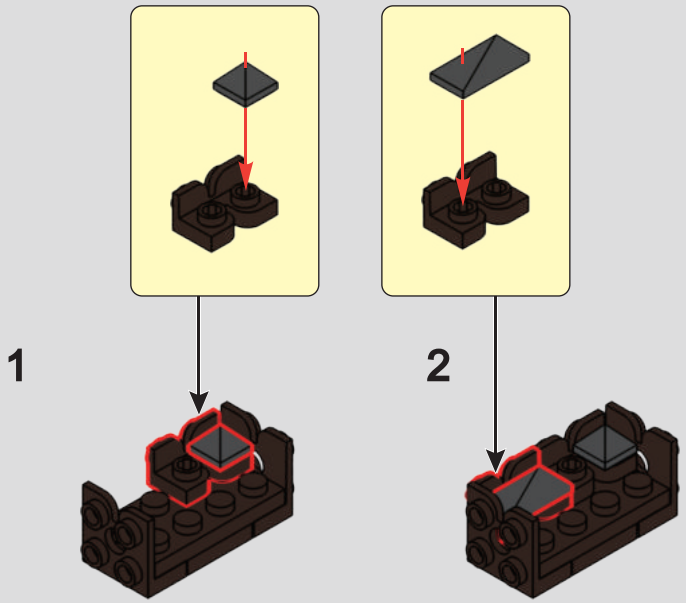

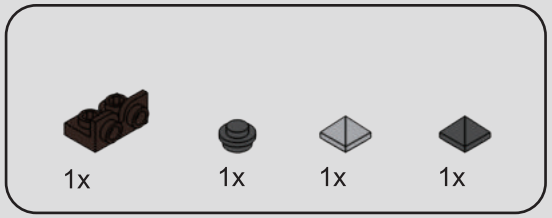

354

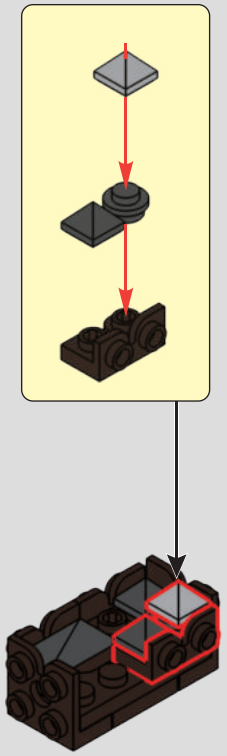

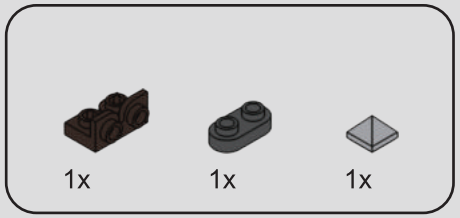

355

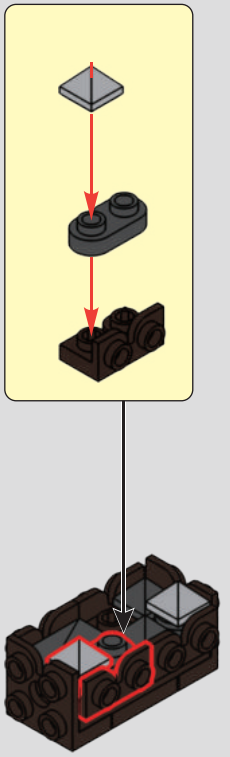



356

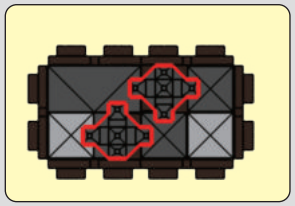

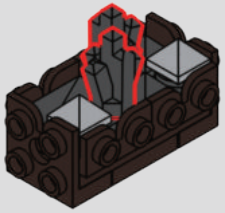

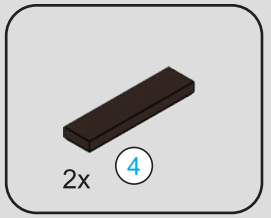



357

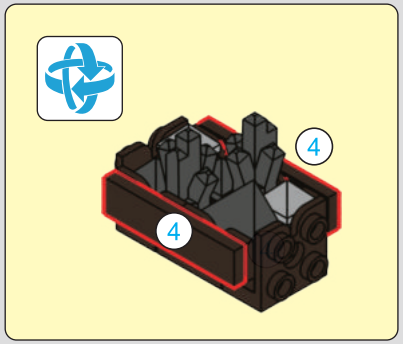

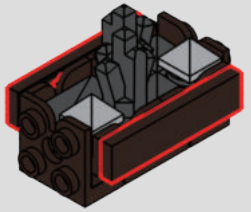

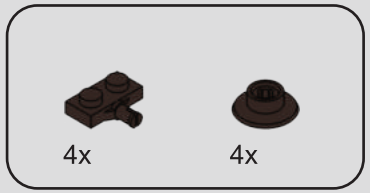

358

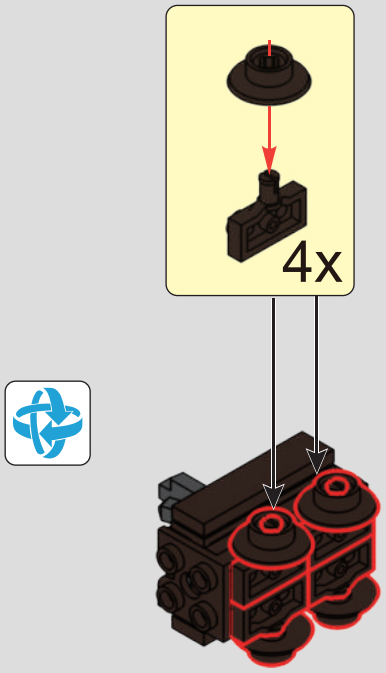



359

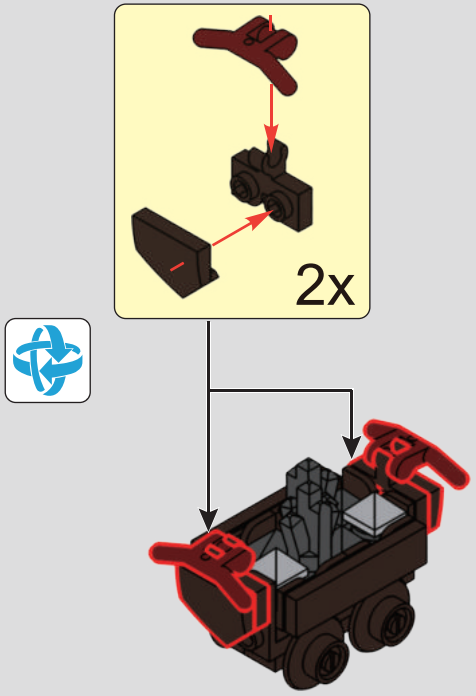

360



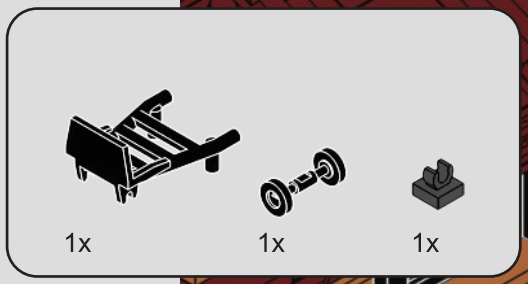

361

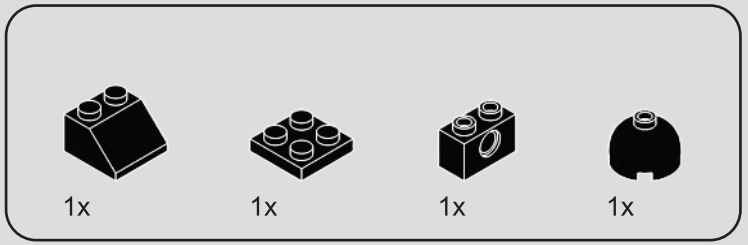

362

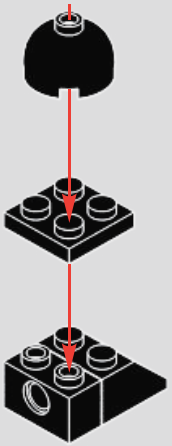

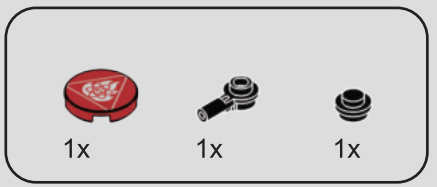

363

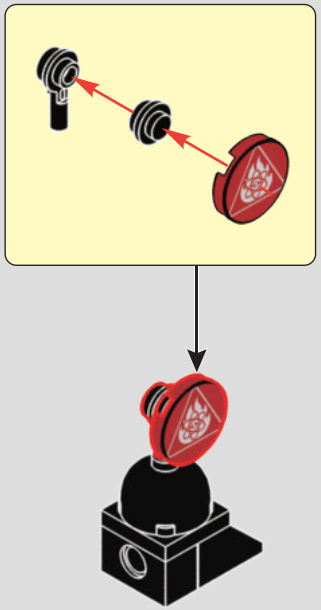

364



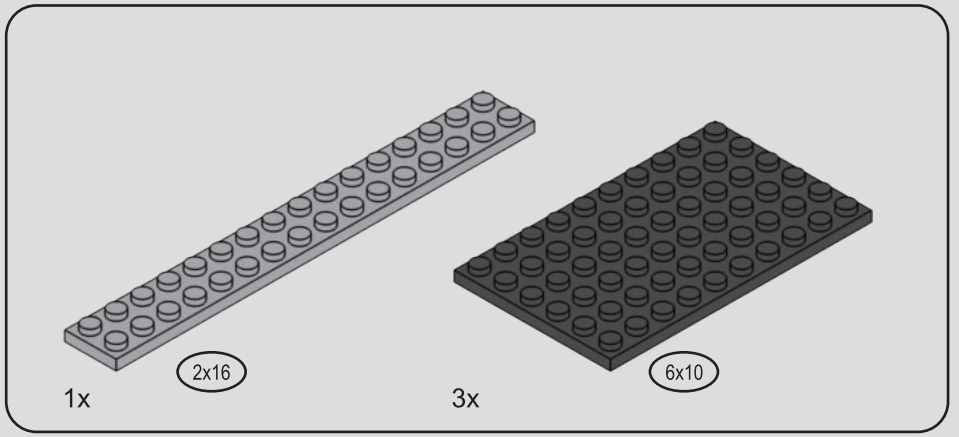

365

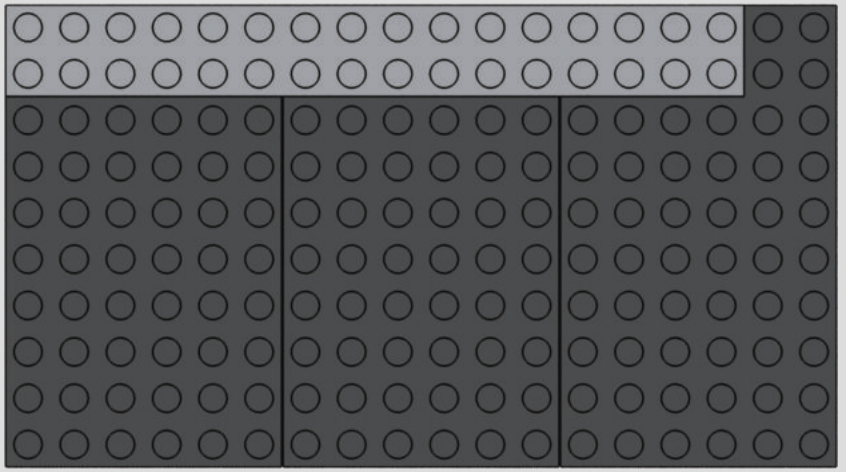

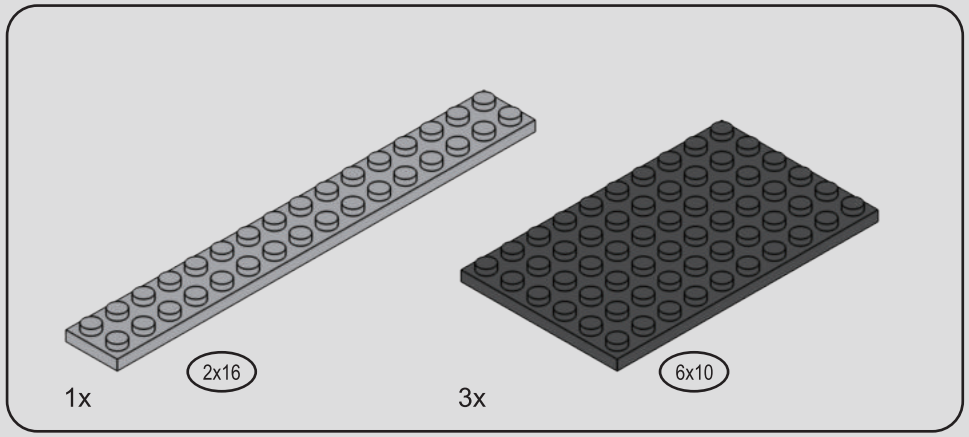

366

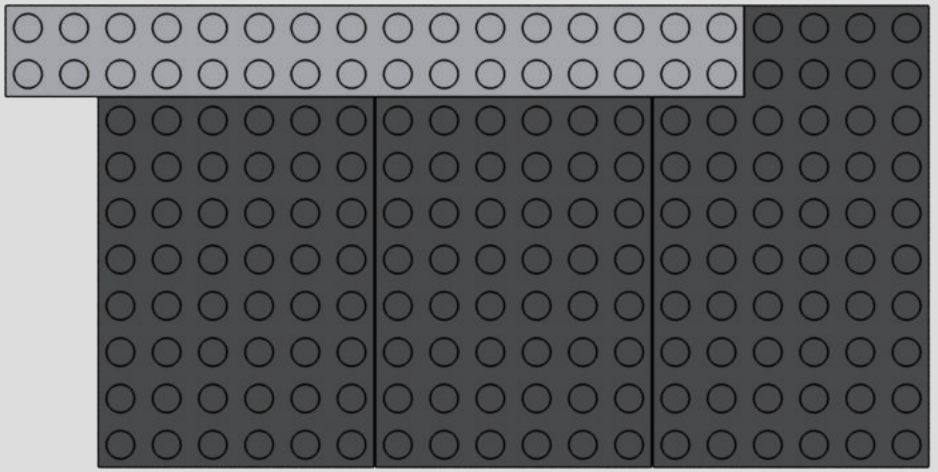

367

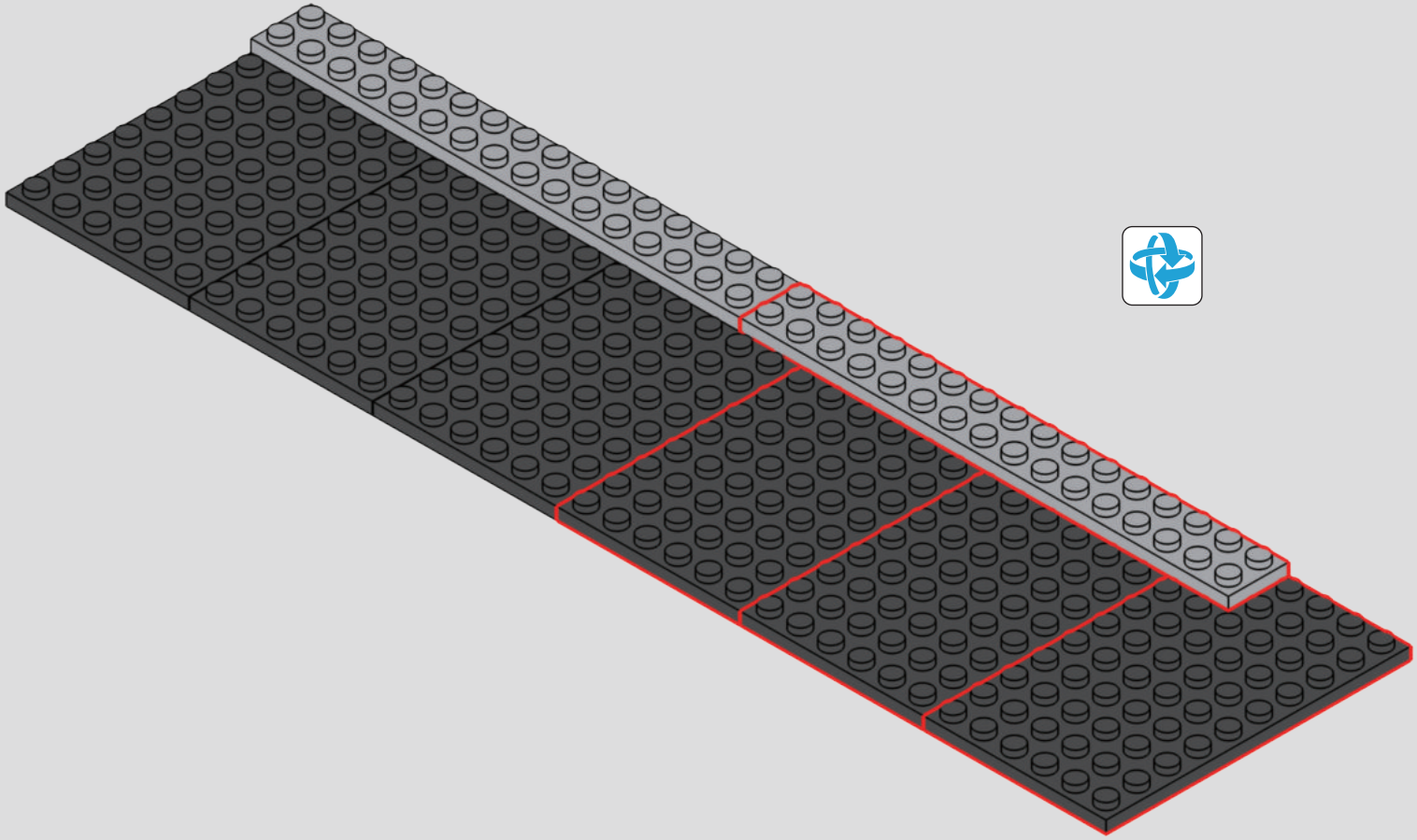

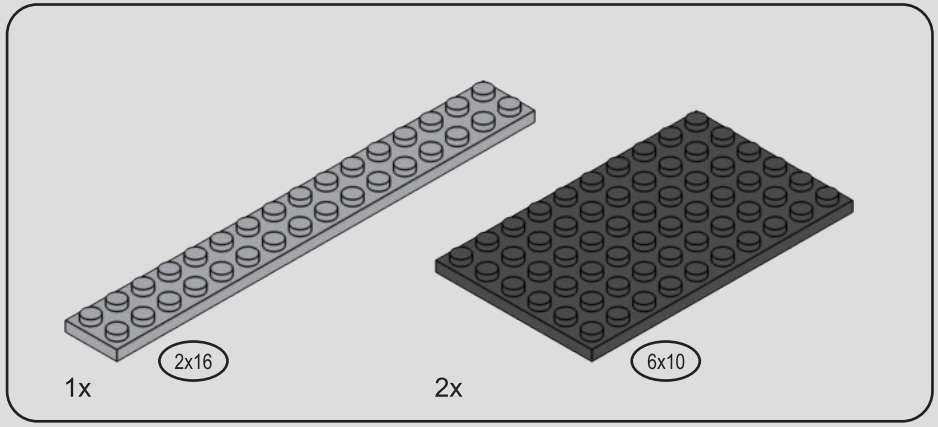

368

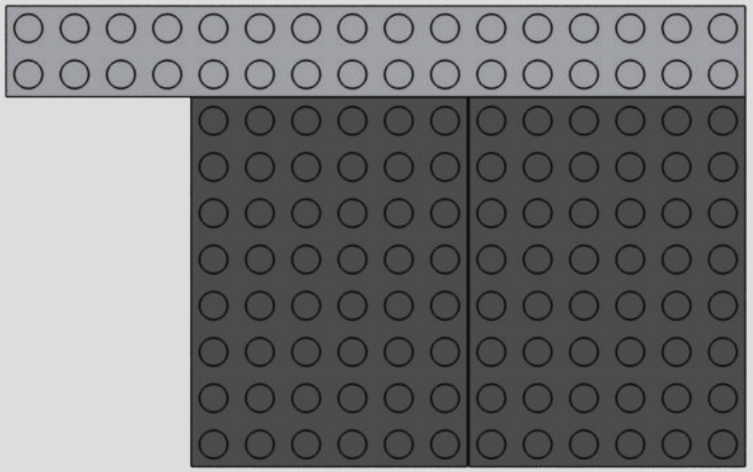

369

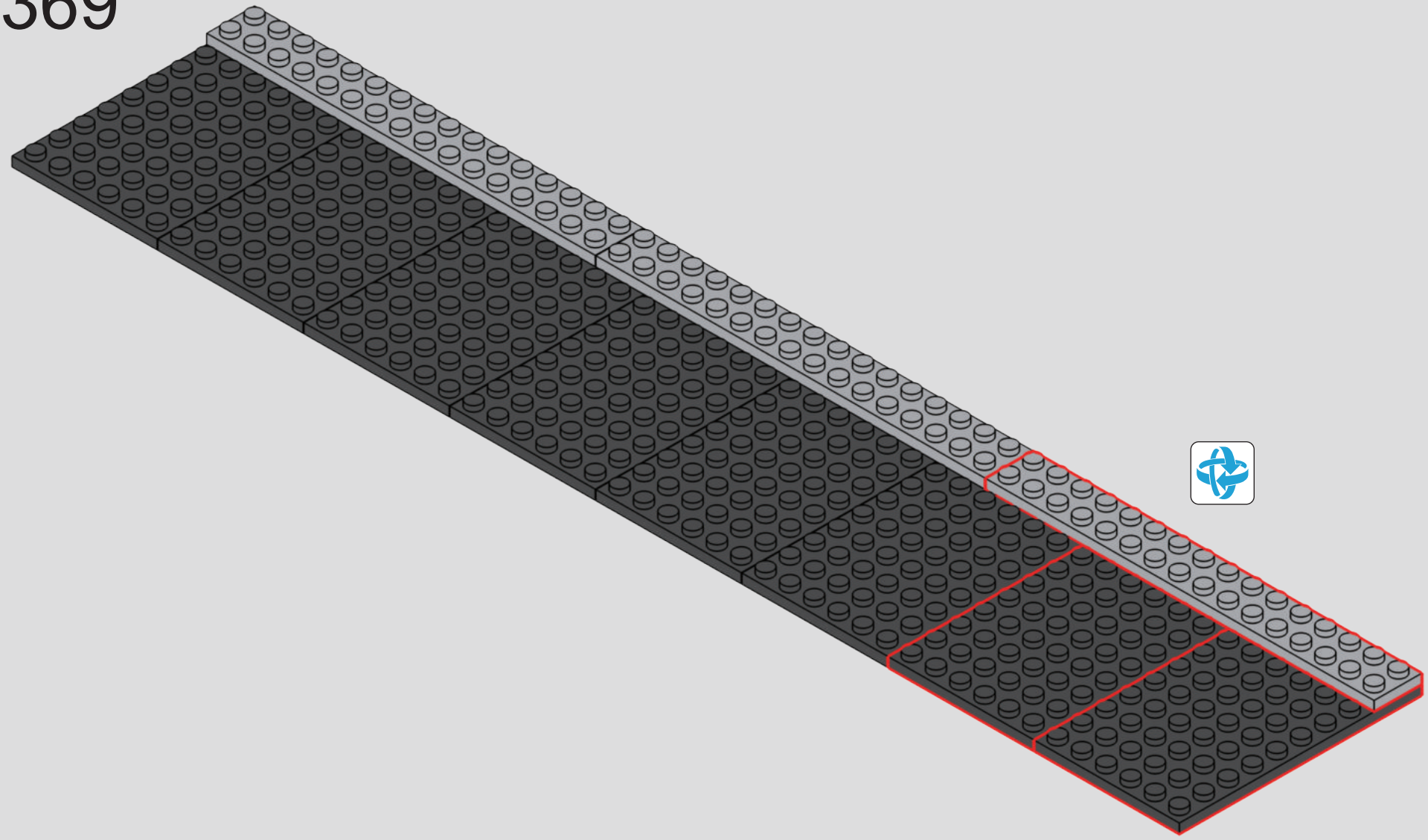

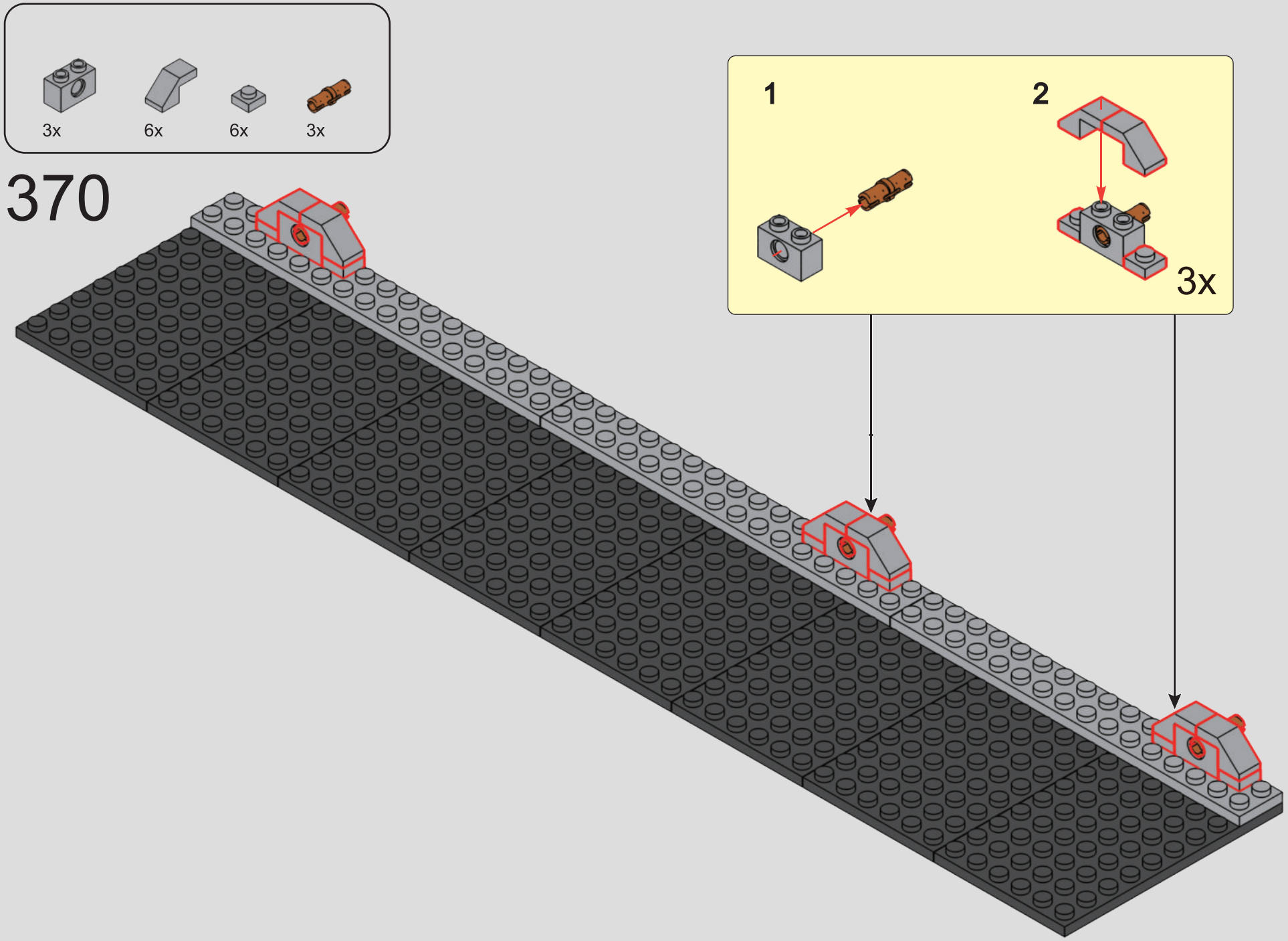
3x
6x
6x
3x
370
1
2
3x

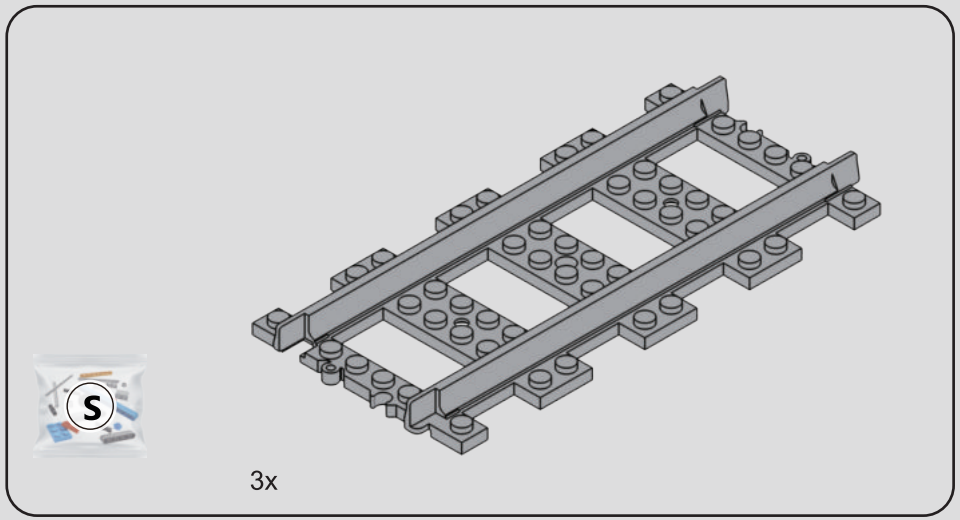

371

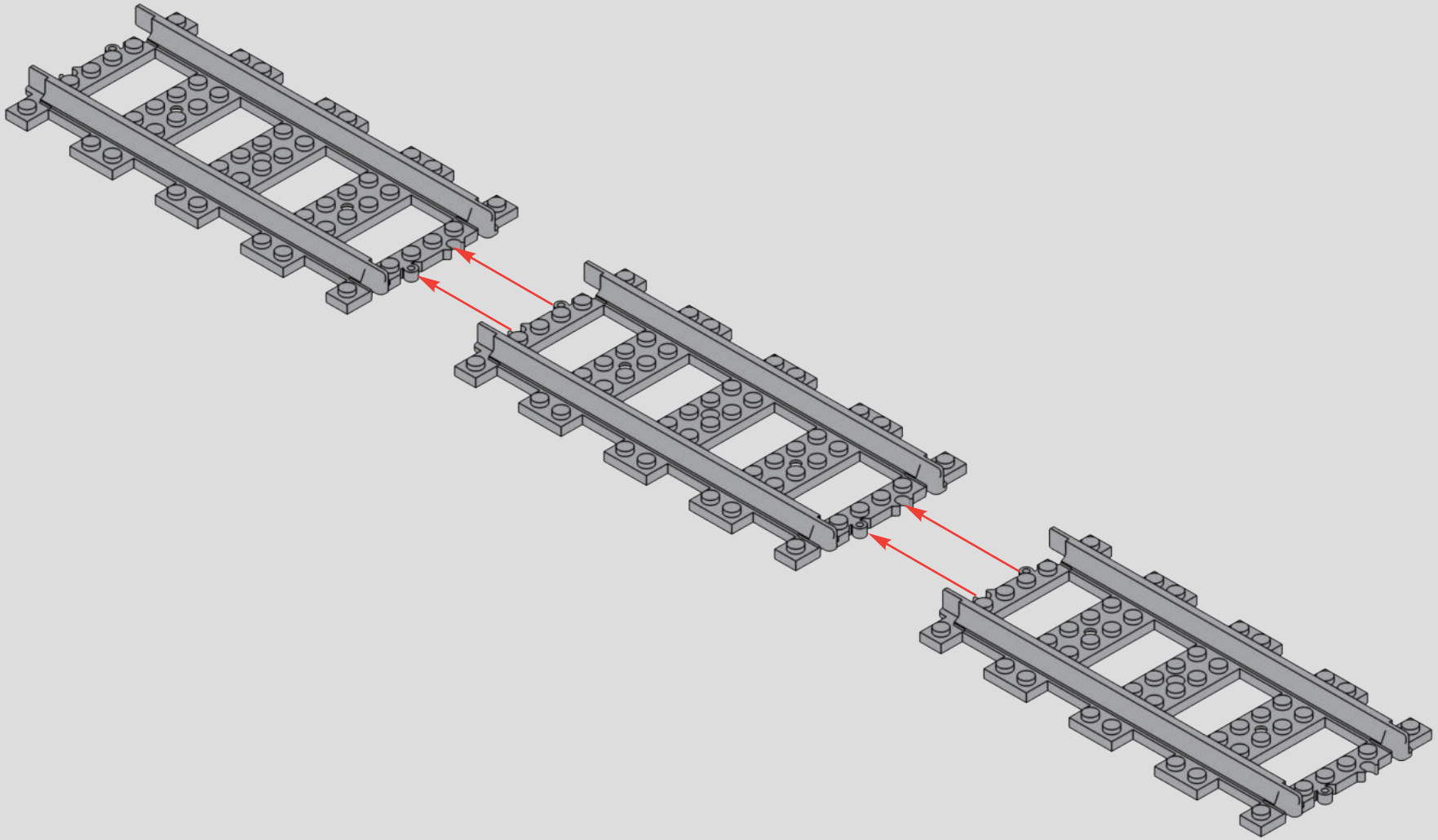

372

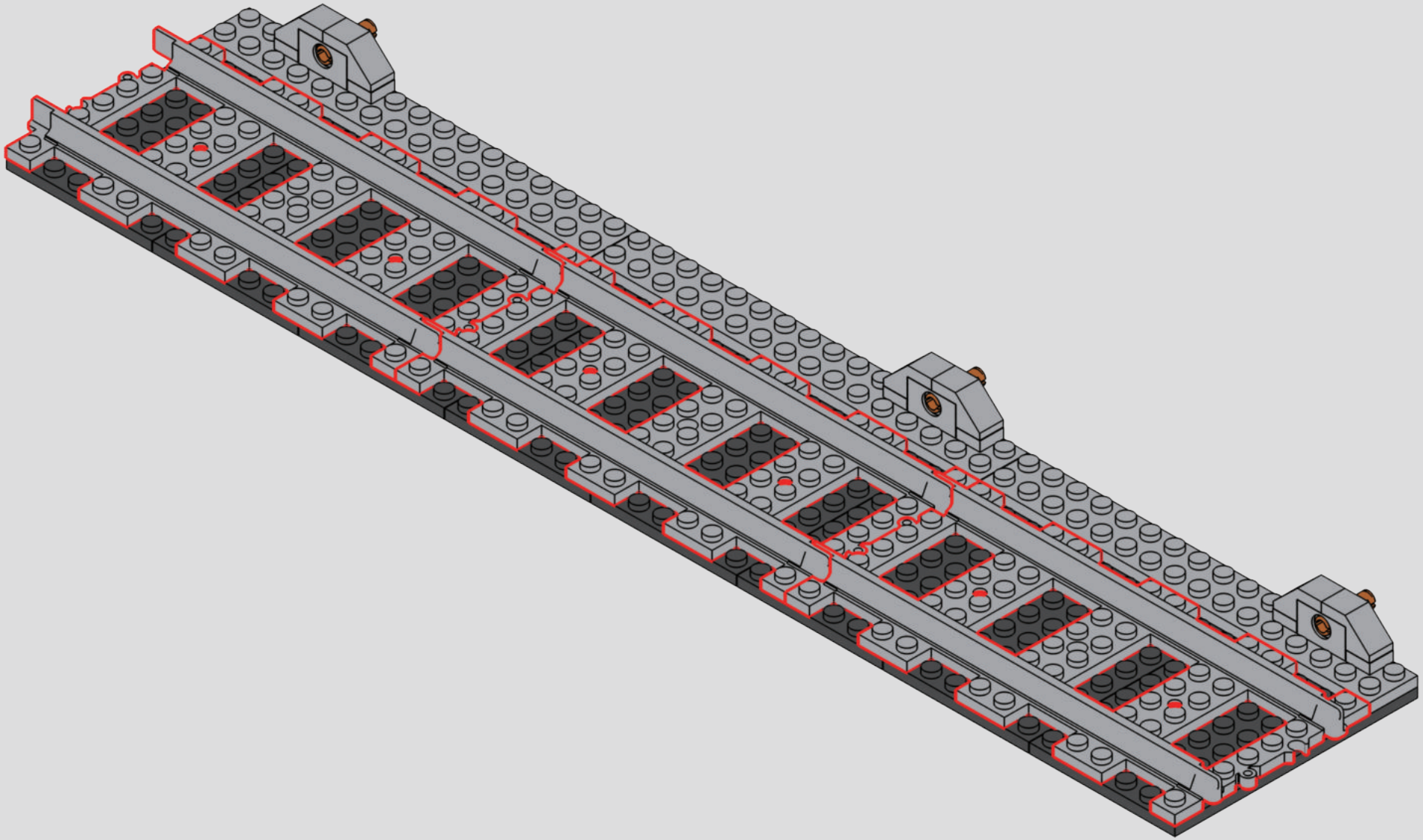

373

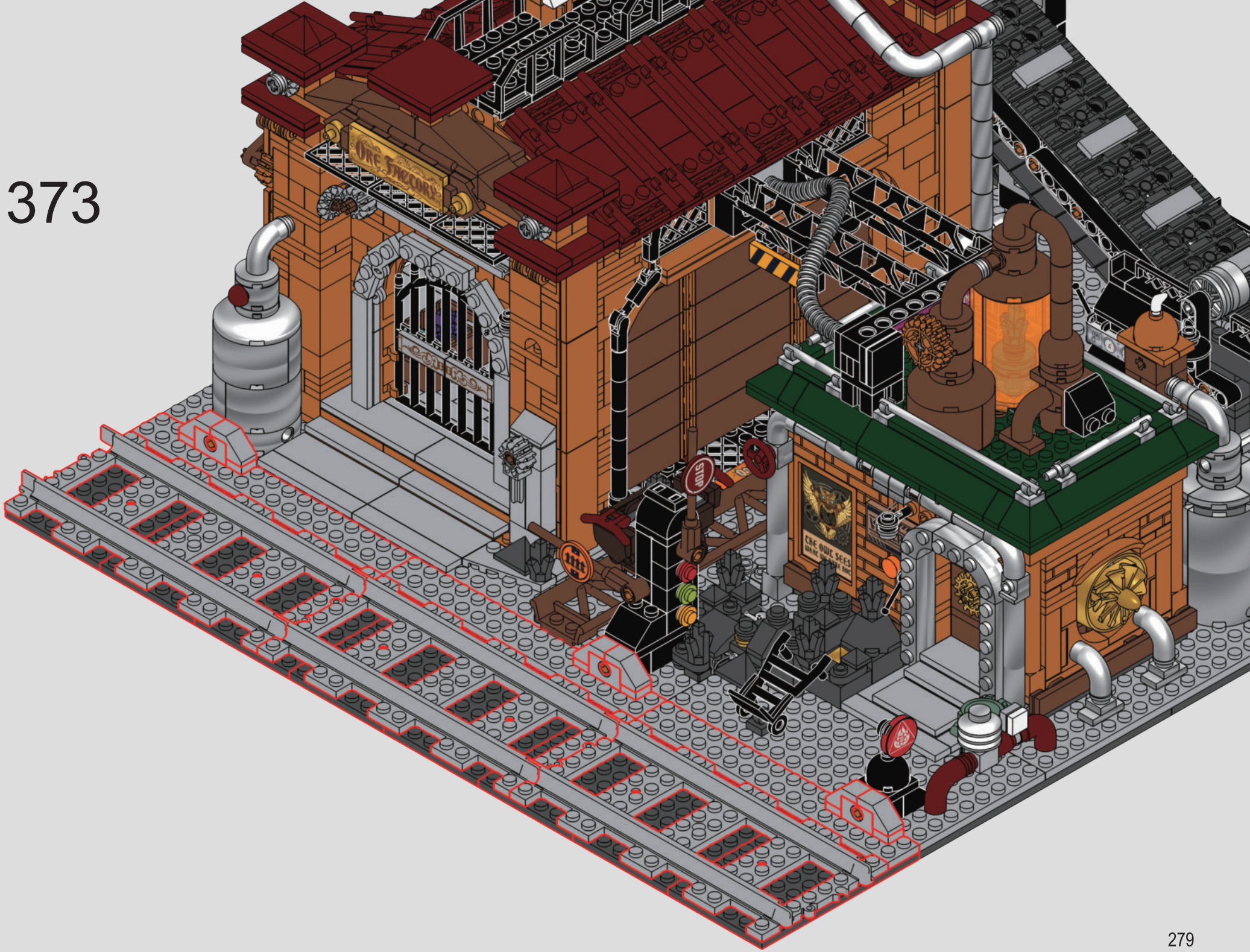

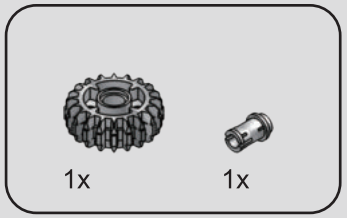

374

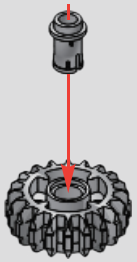

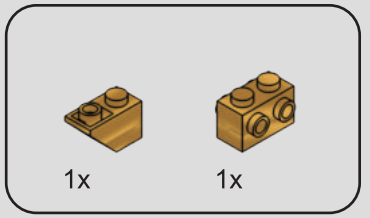

375

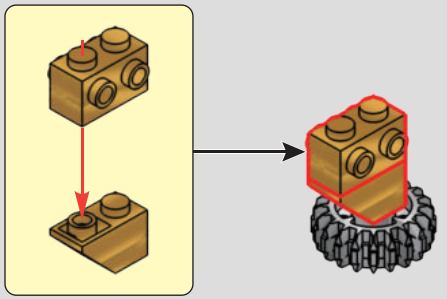

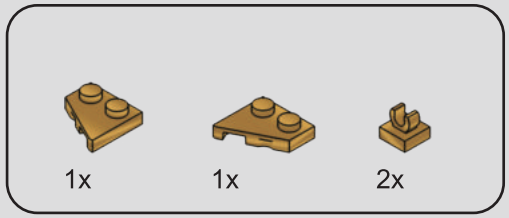

376

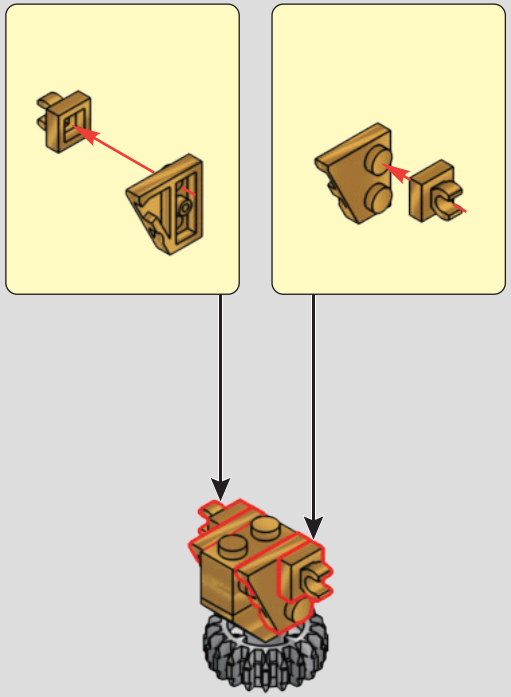

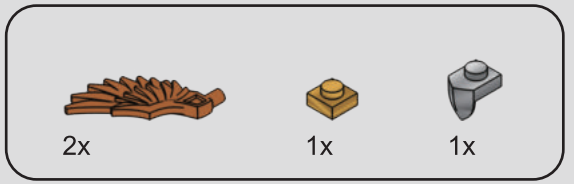

377



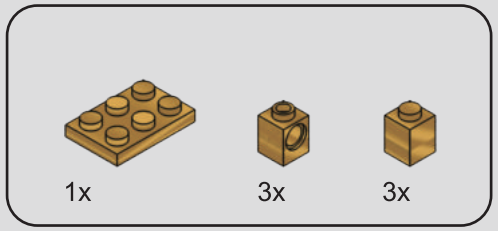

378

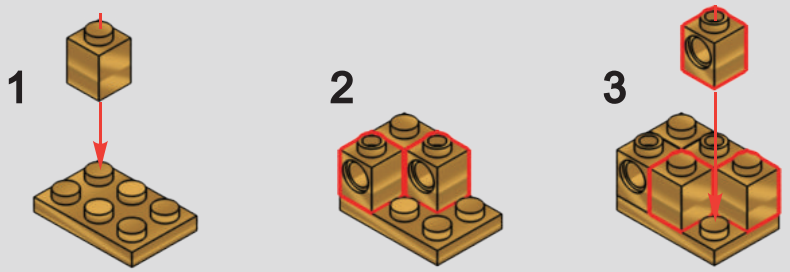

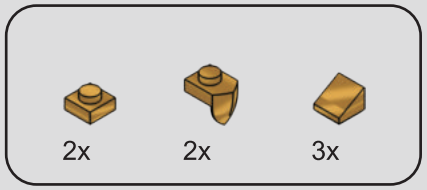

379

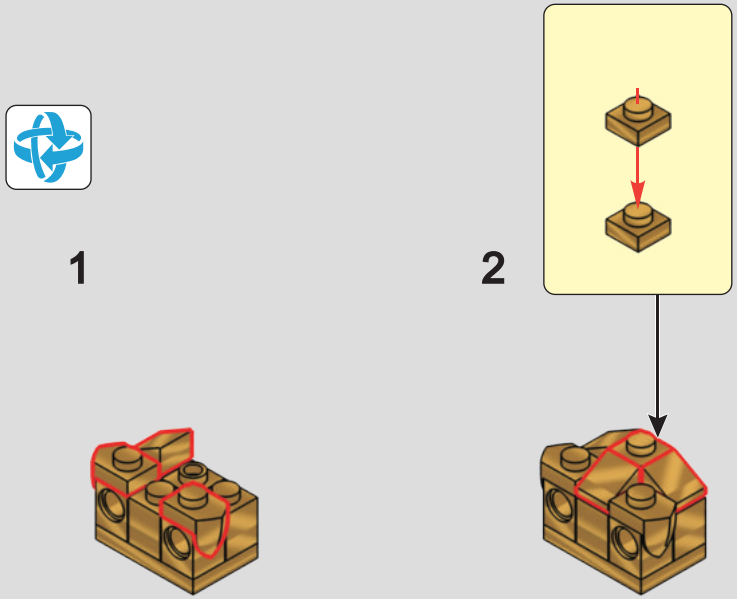

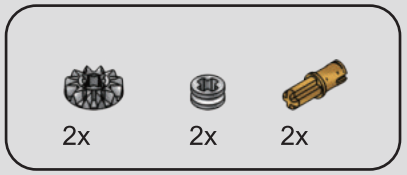

380

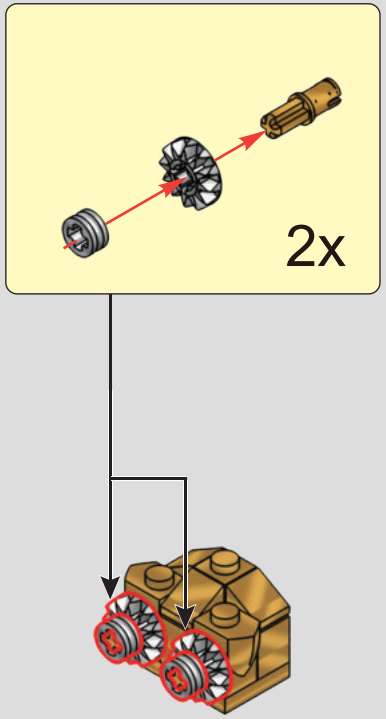

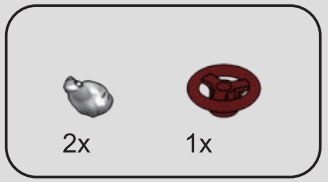

381

1

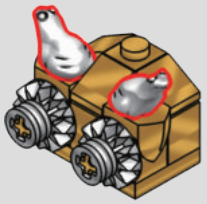

2

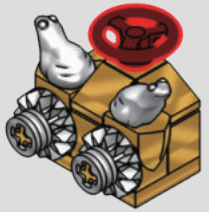

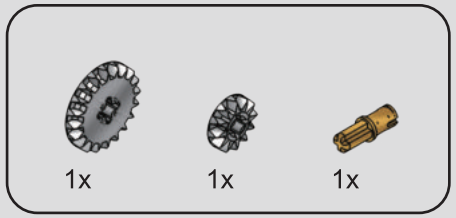

382

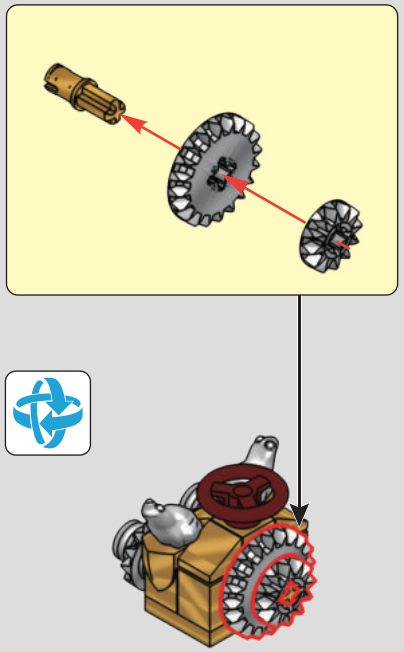

383




16

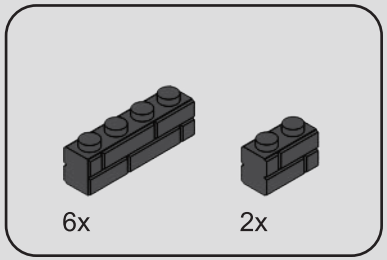

384

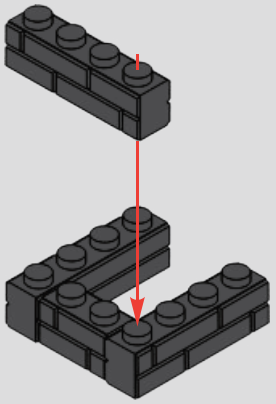

2x

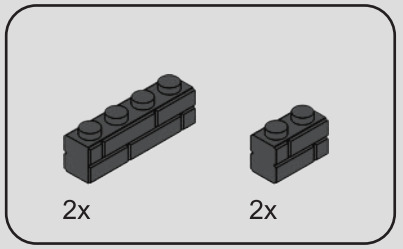

385

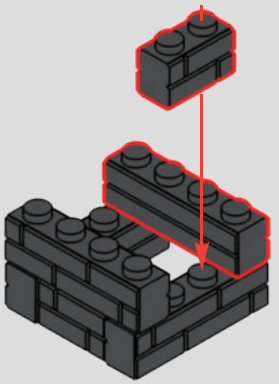

2x

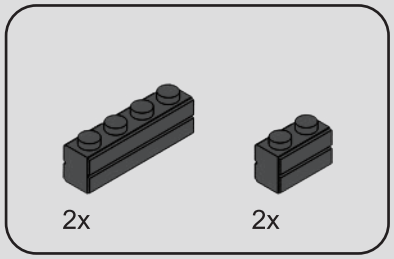

386

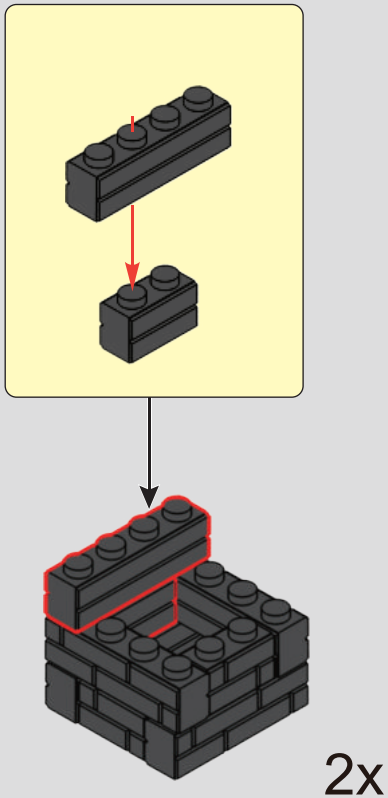

2x

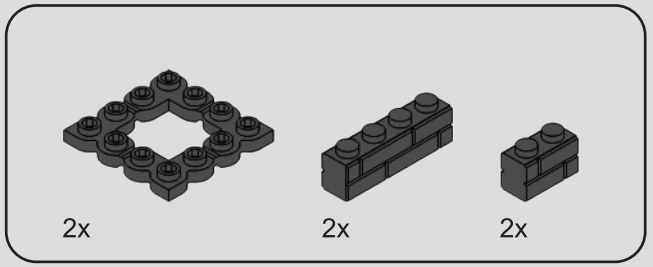

387

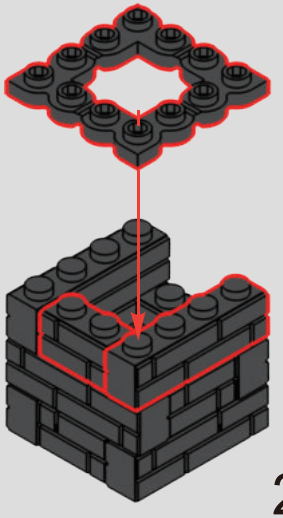

2x

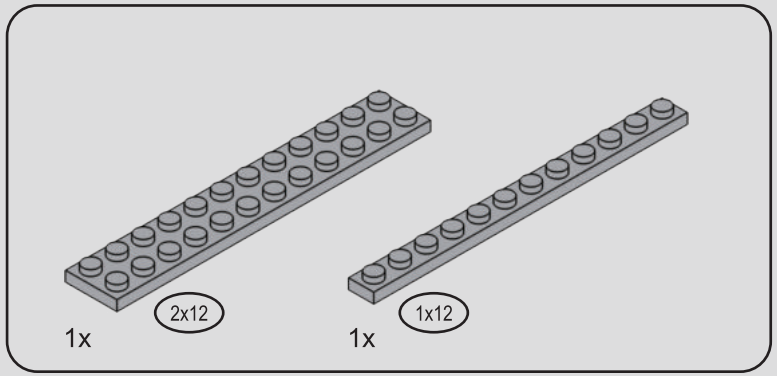

388

1

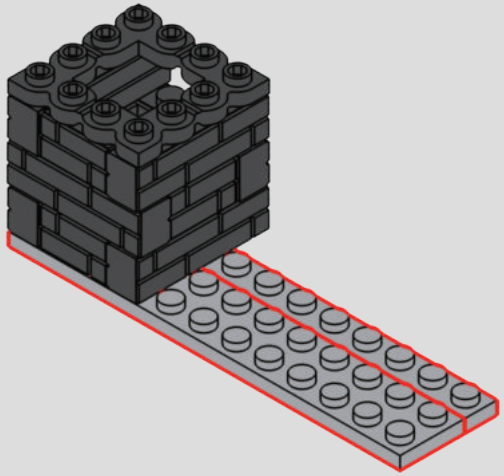

2

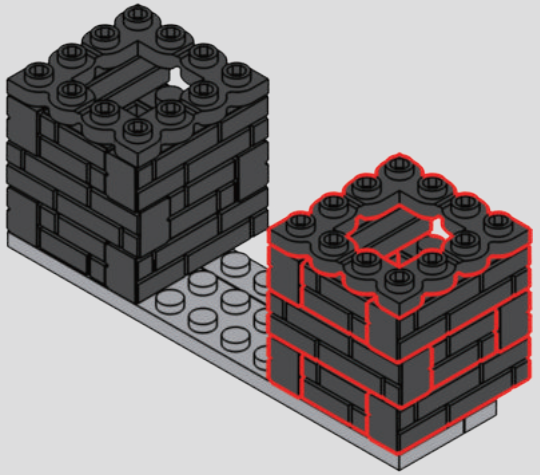

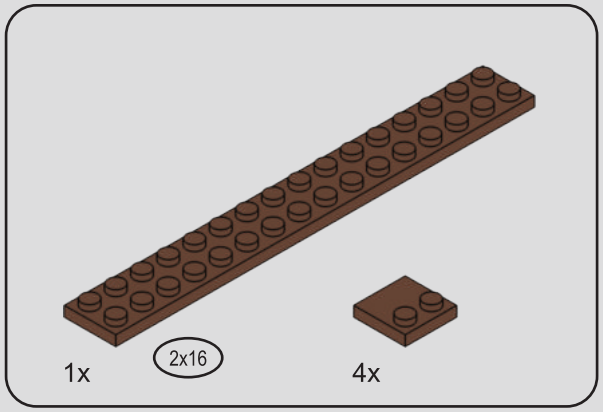

389

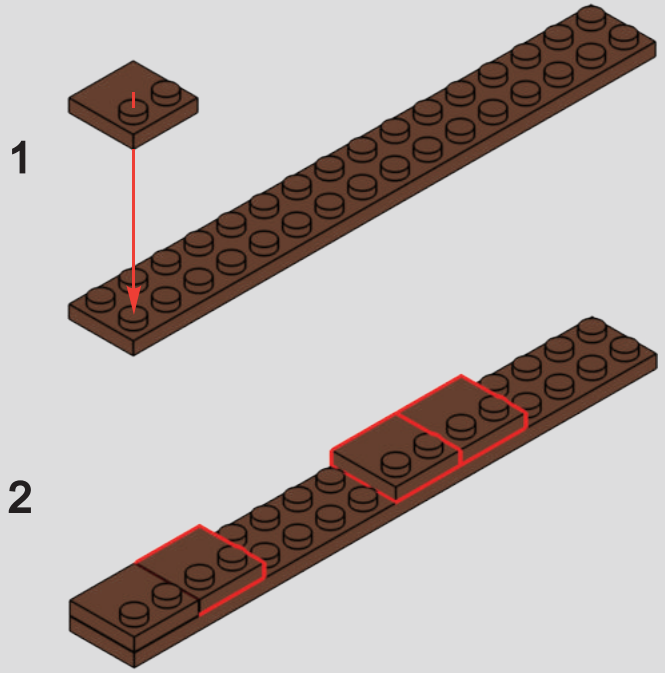

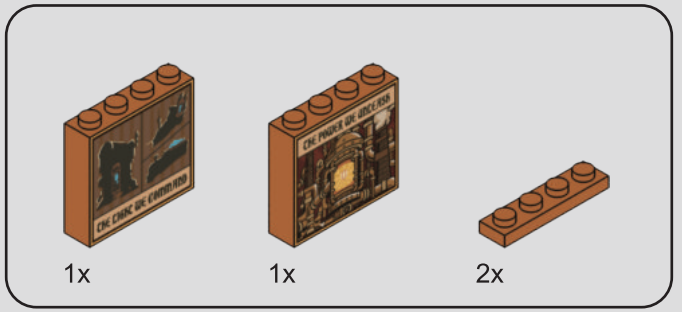

390

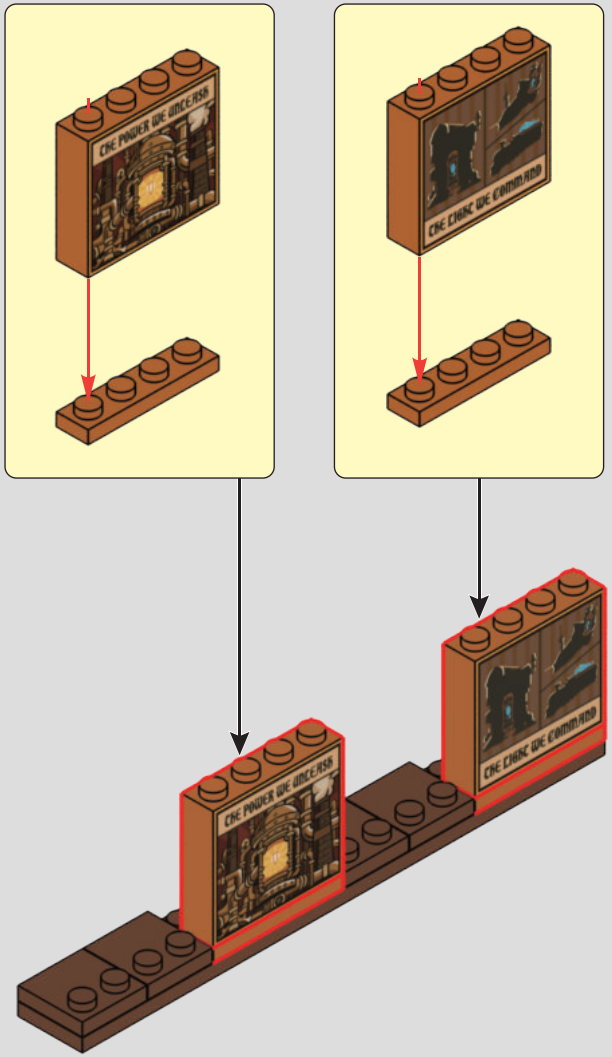

391

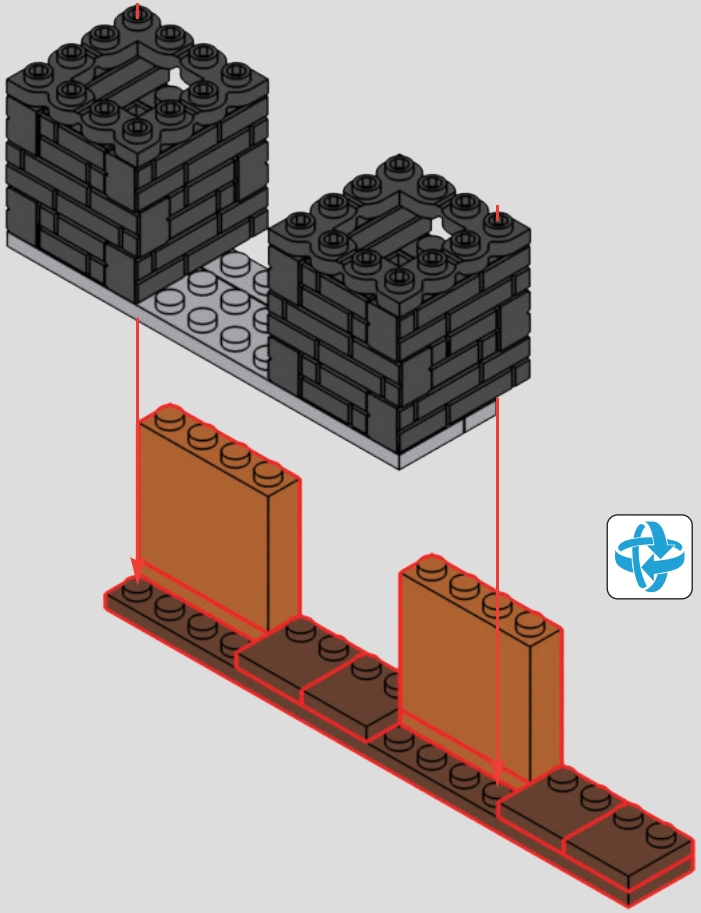

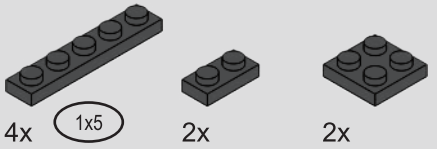

392



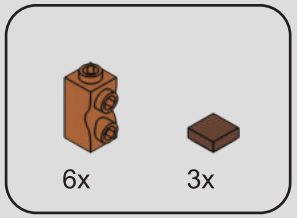

393

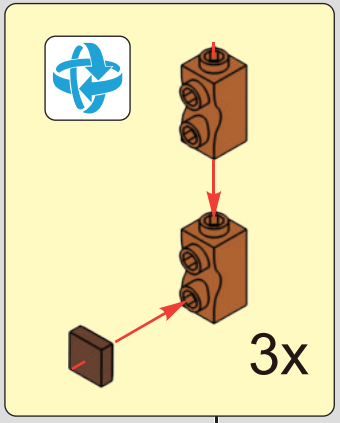

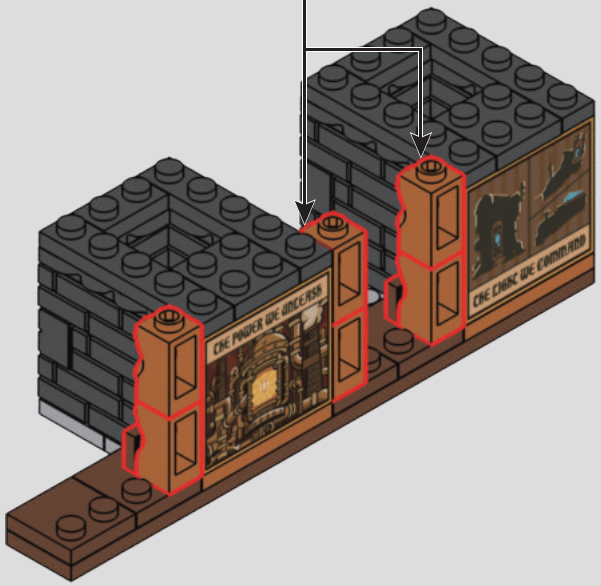

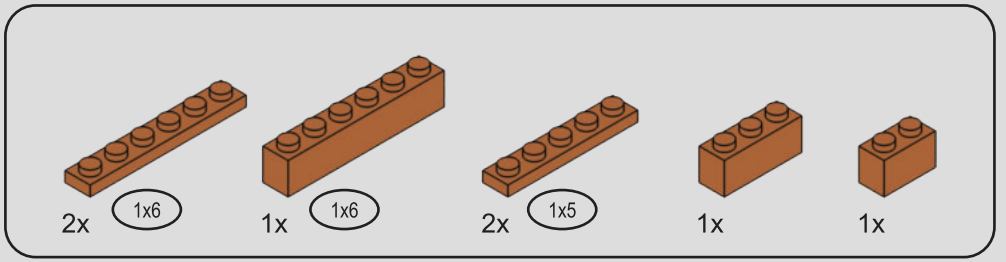

394

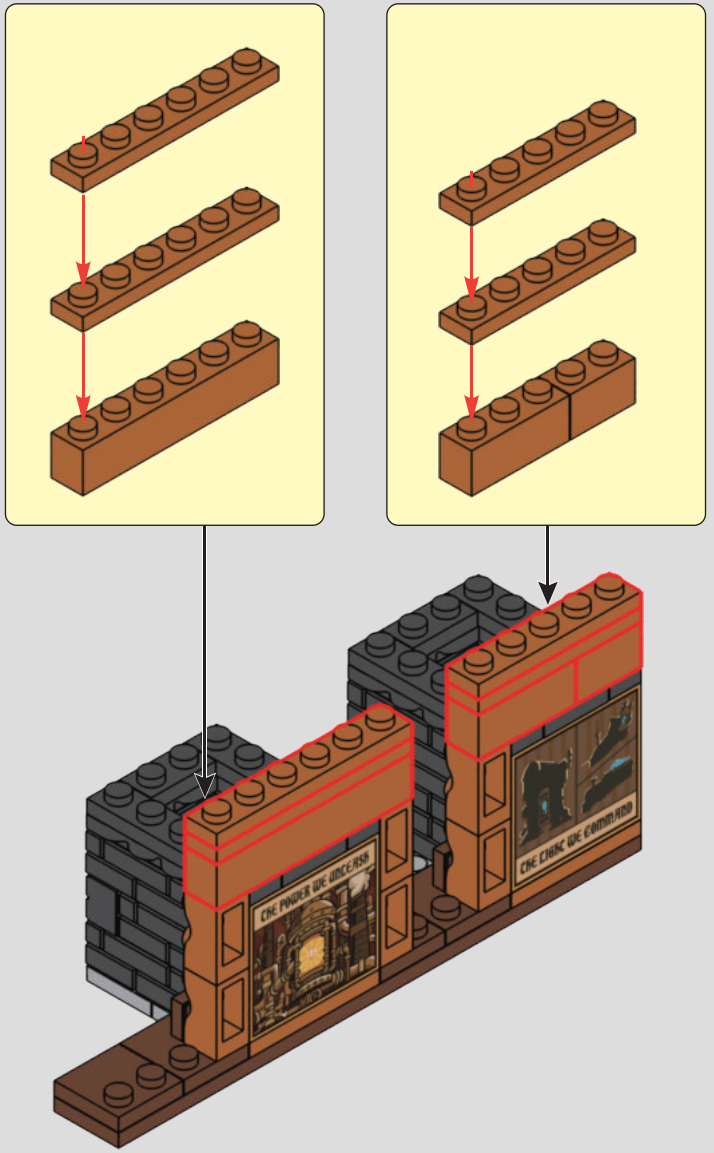

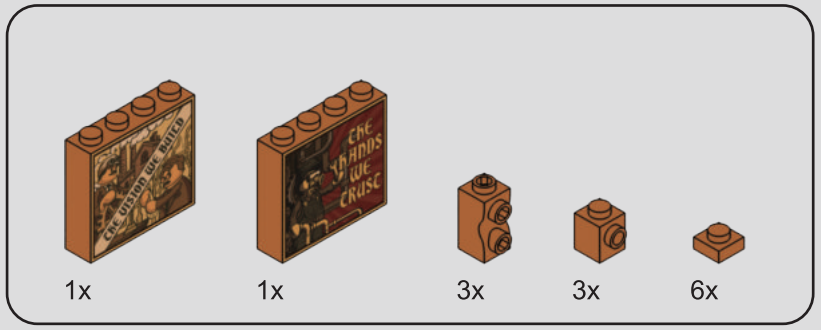

395



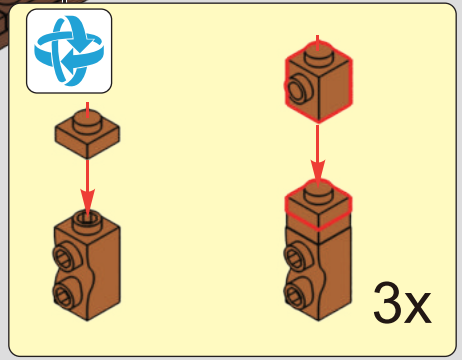

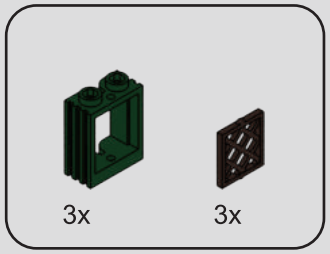

396

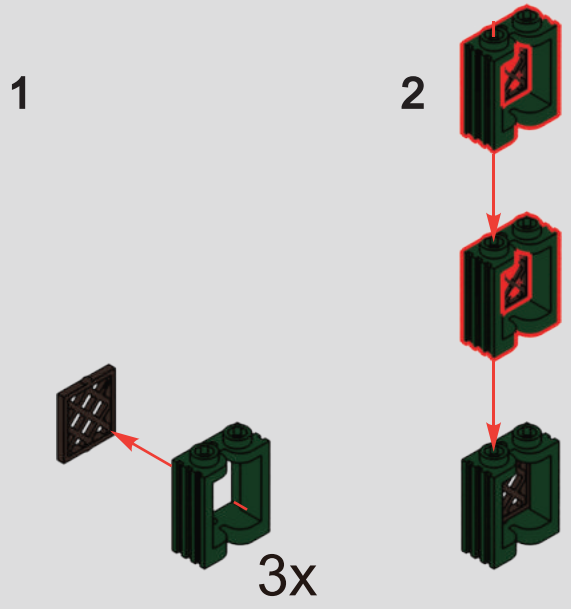

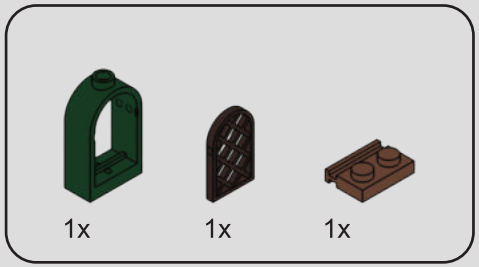
1x
1x
1x

397

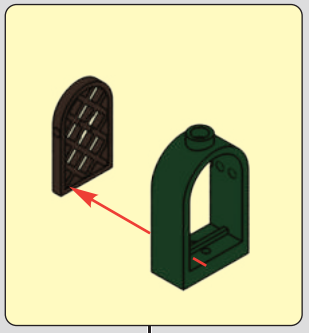

1



2

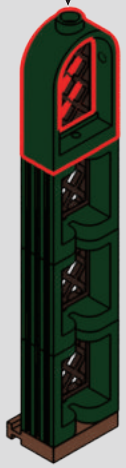

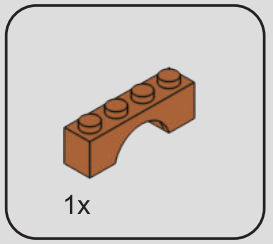
1x

398

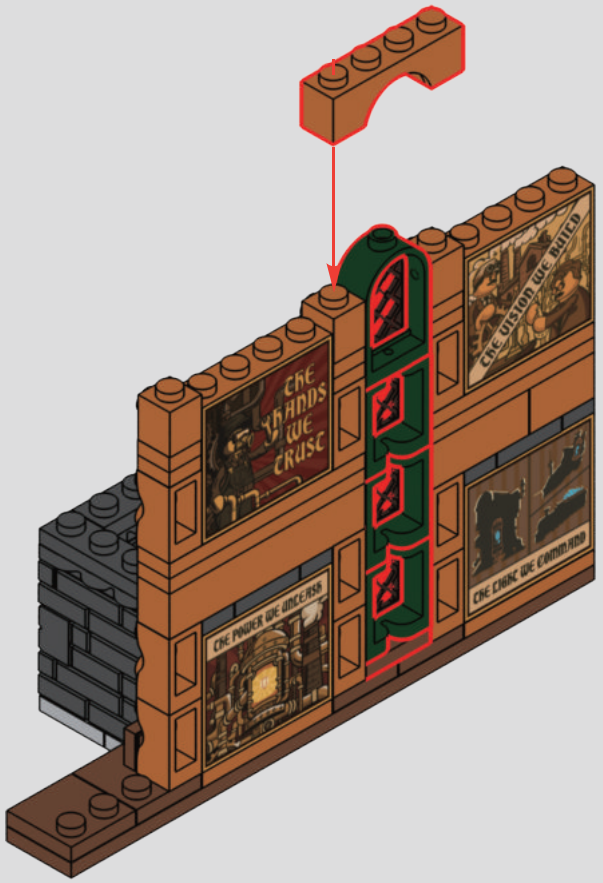
THE HANDS WE CRUSE
THE VISION WE BOILED
THE POWER WE ACCESS
THE CHAIR WE COMMAND

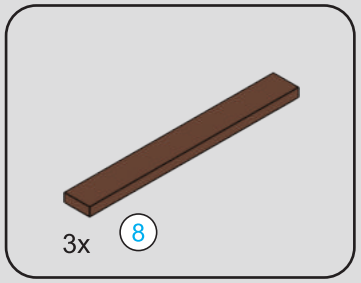



399

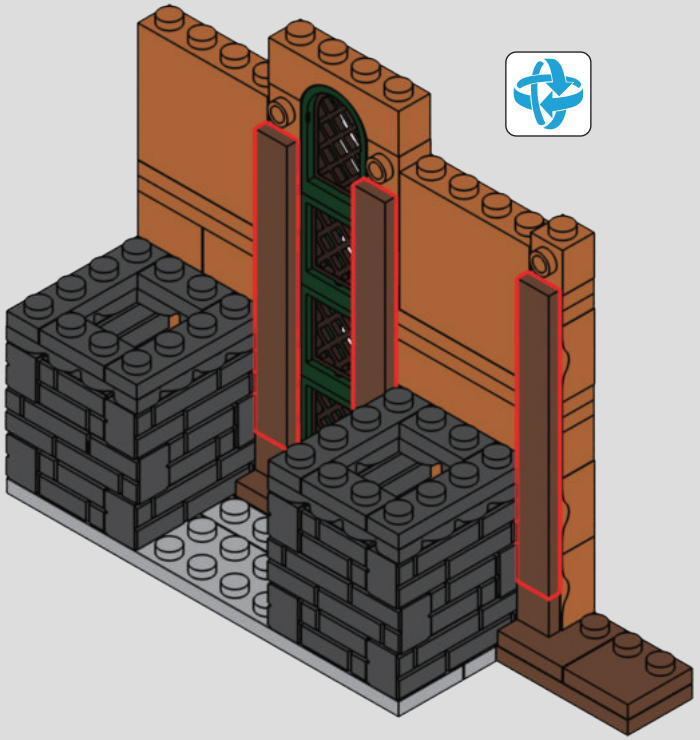

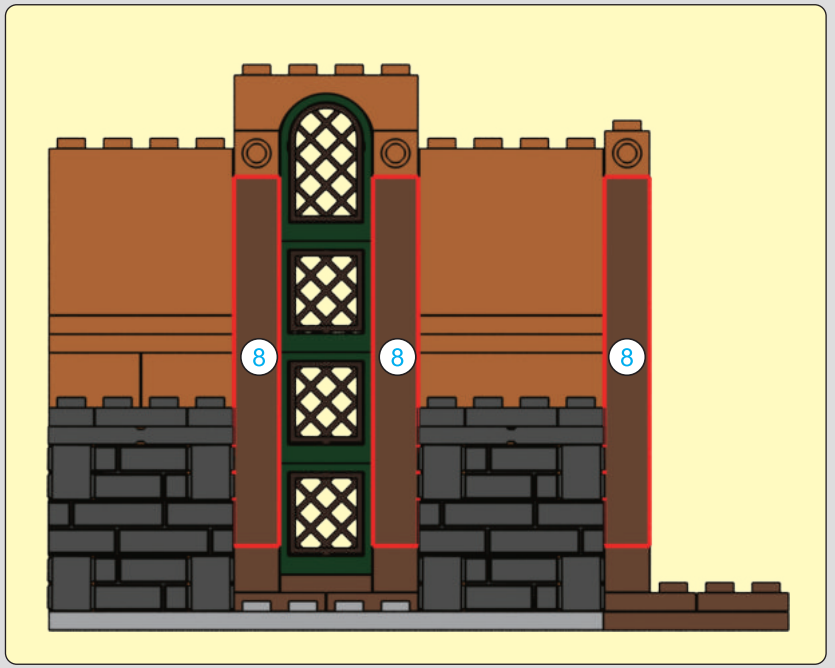

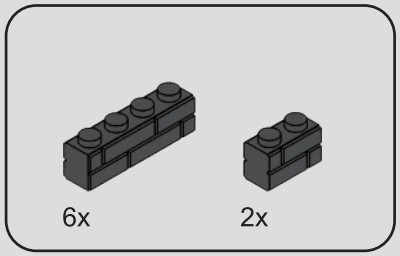

400

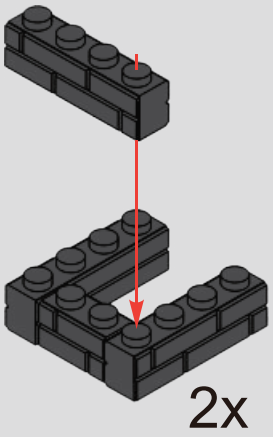

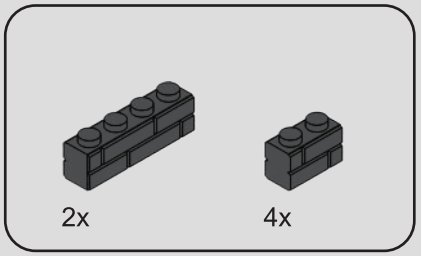

401

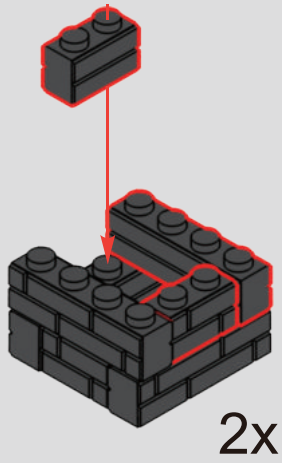

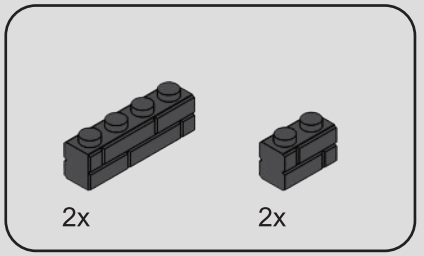

402

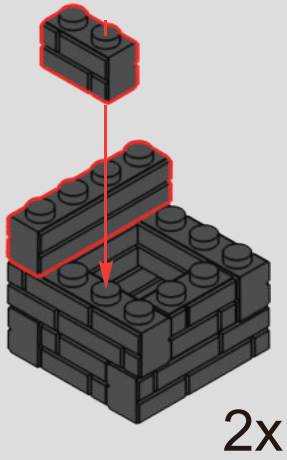

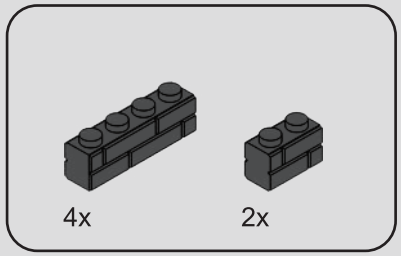

403

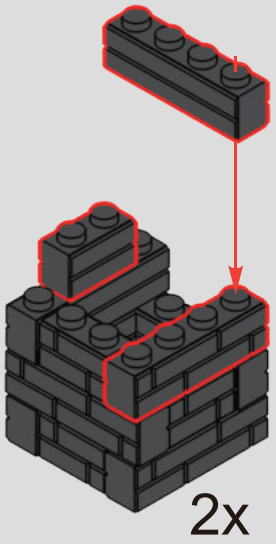

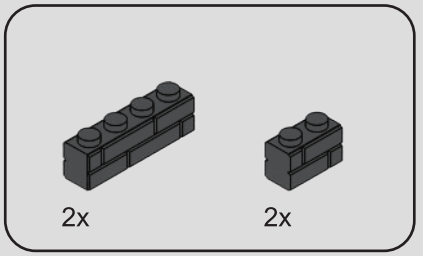

404

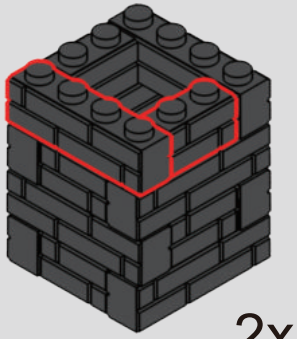

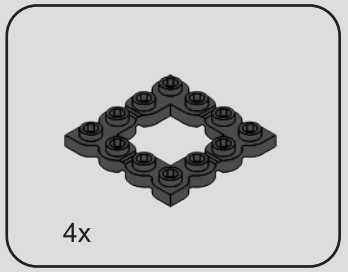

405

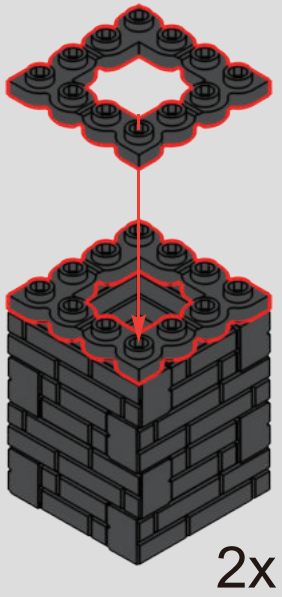

406

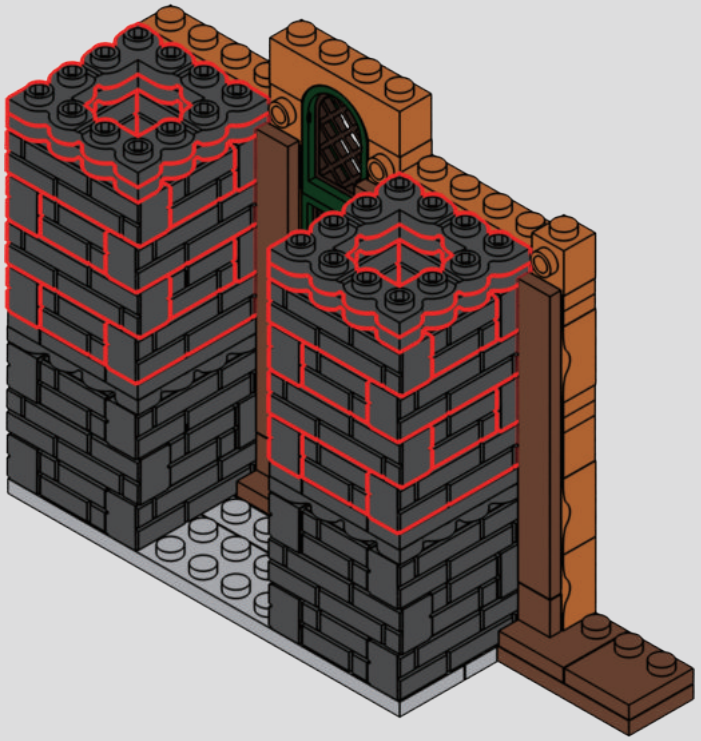

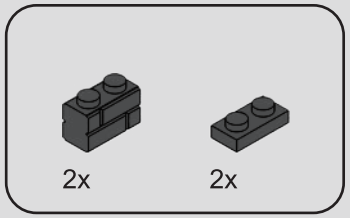

407

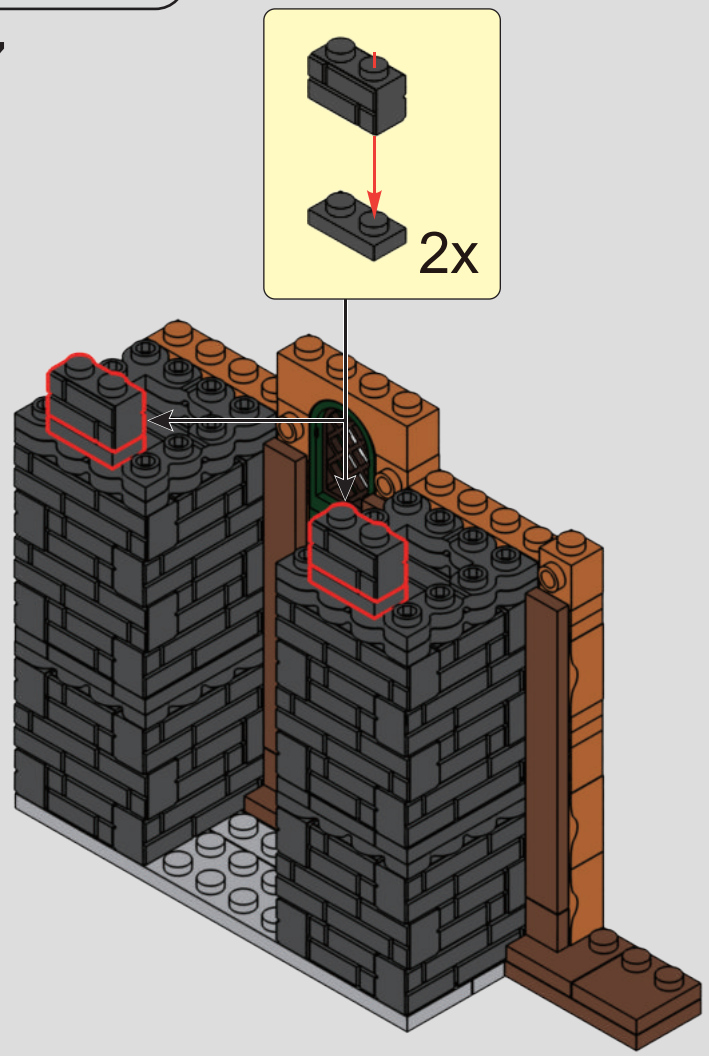

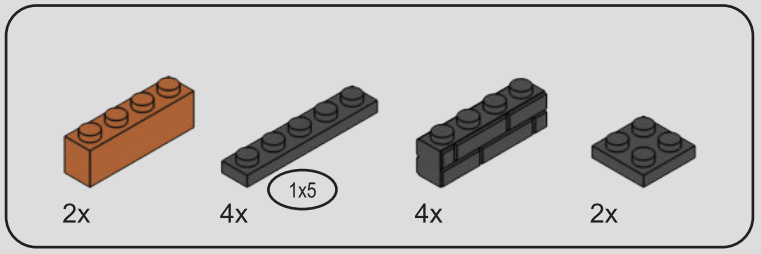

408

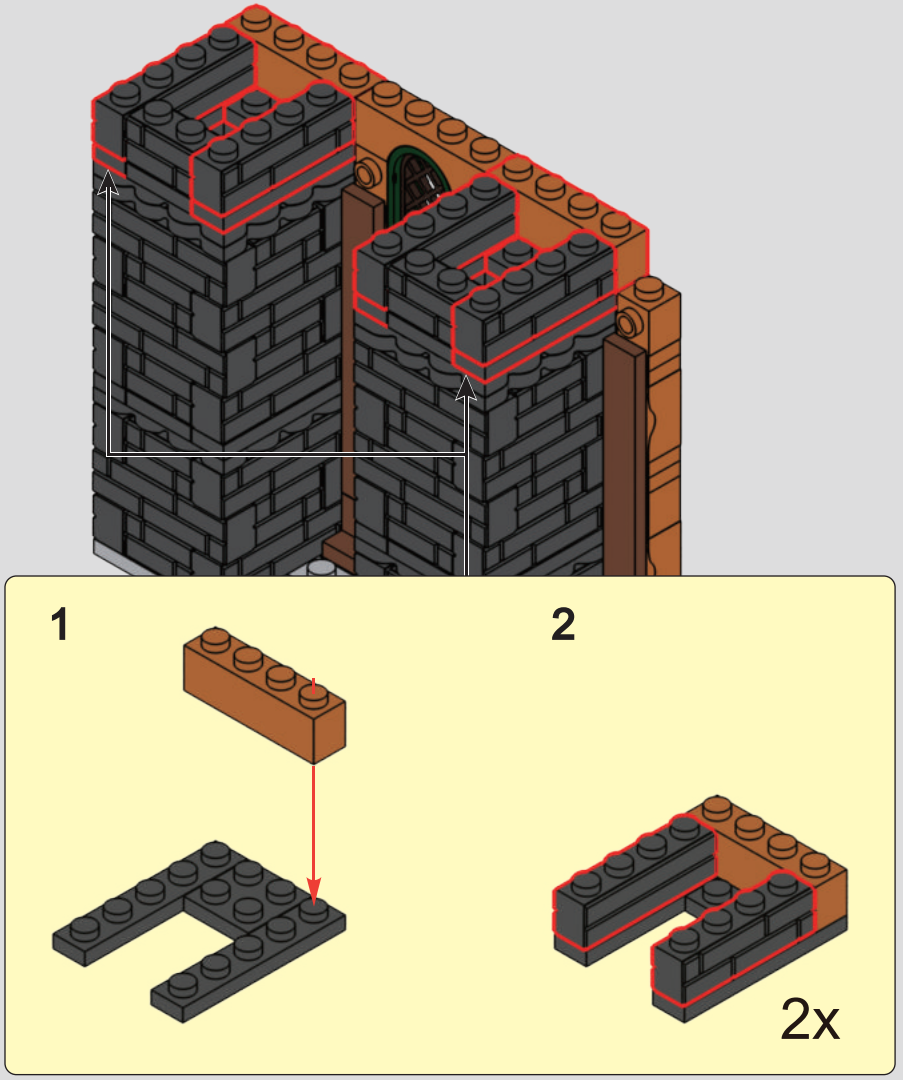

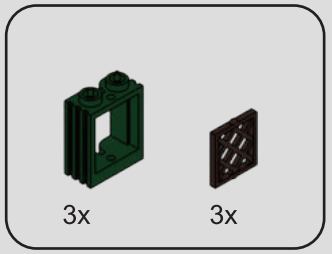

409

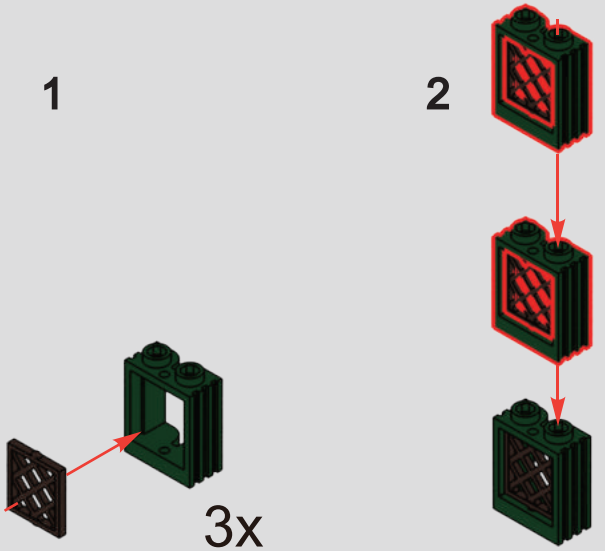

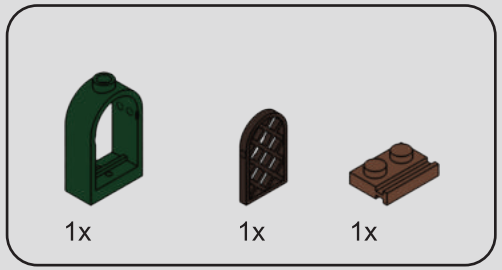

410

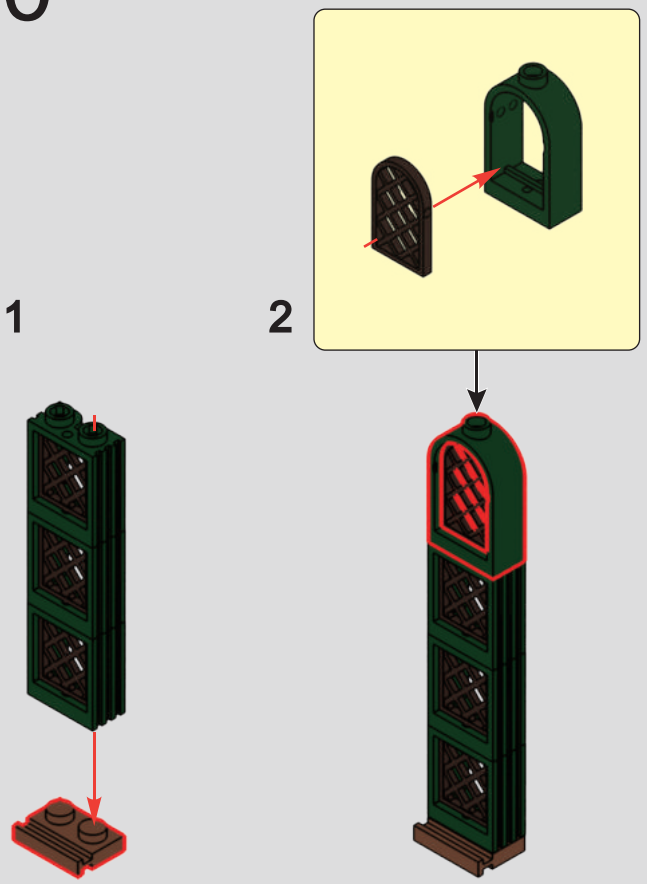

411

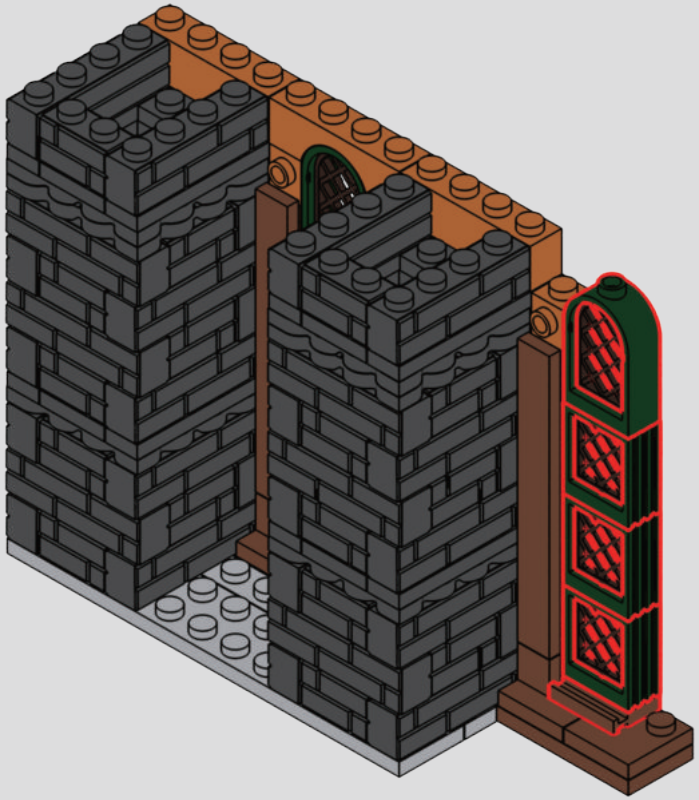

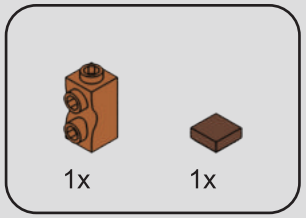

412

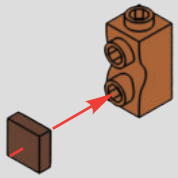

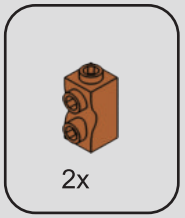

413



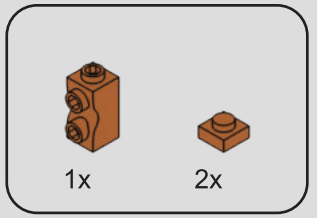

414

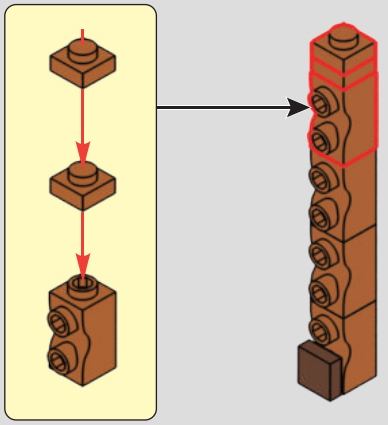

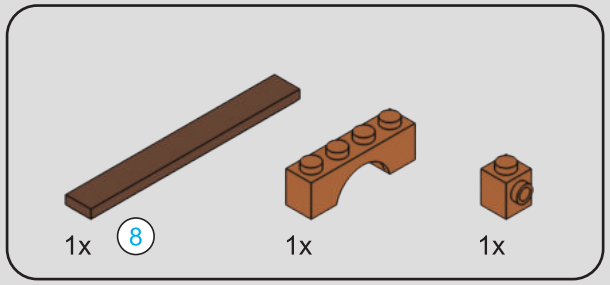

415

1

2

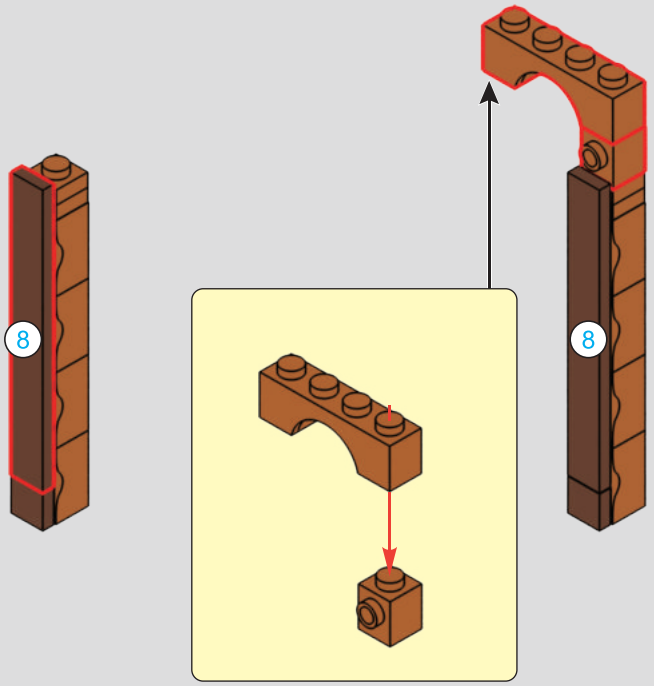



416

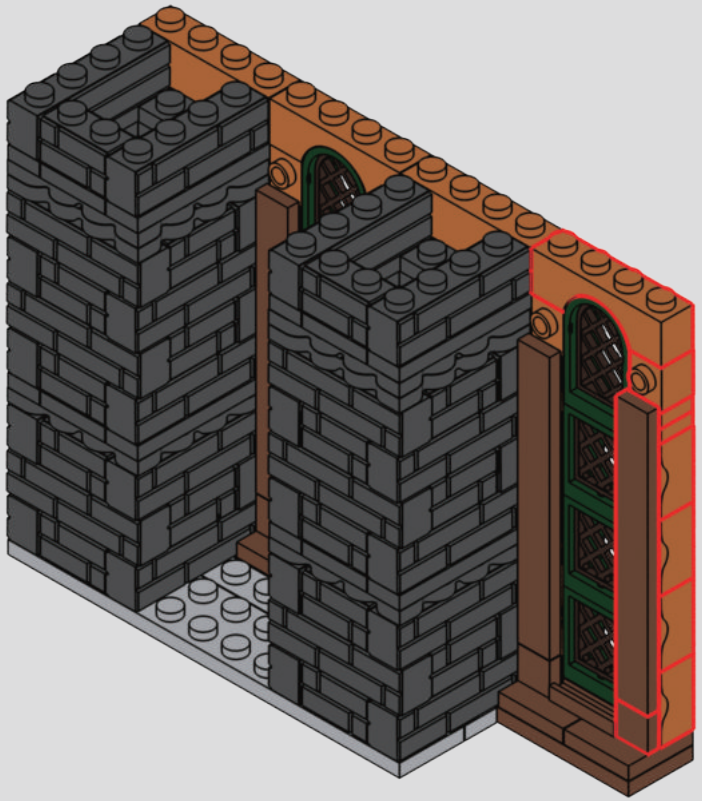

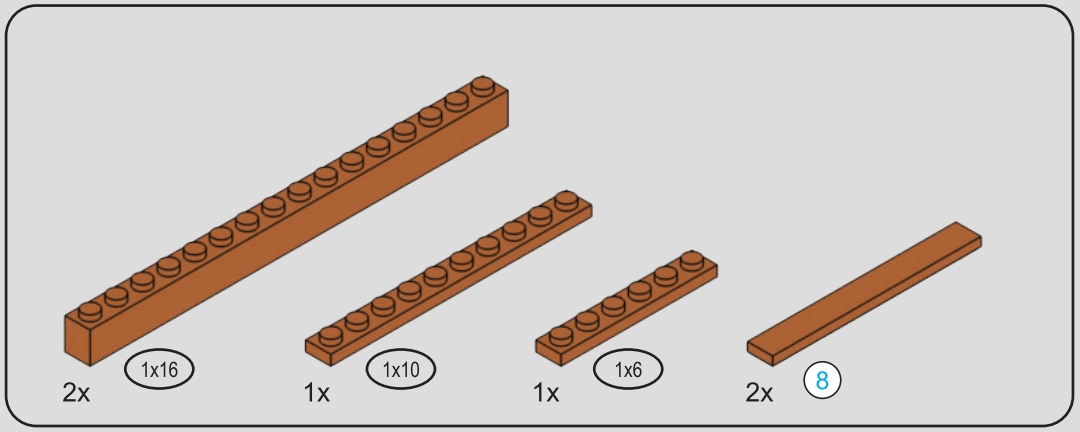

417

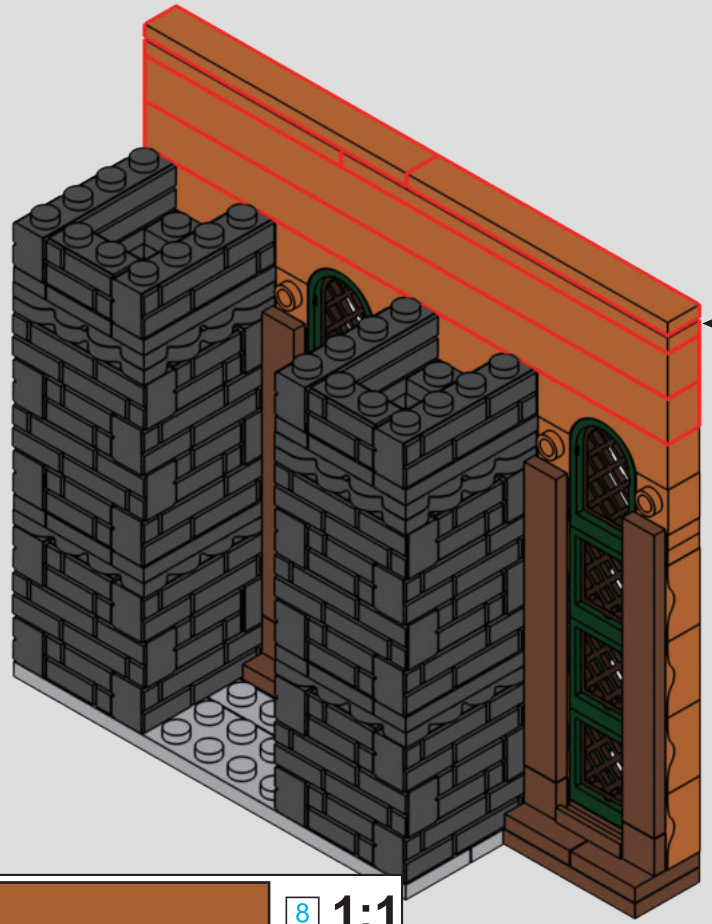

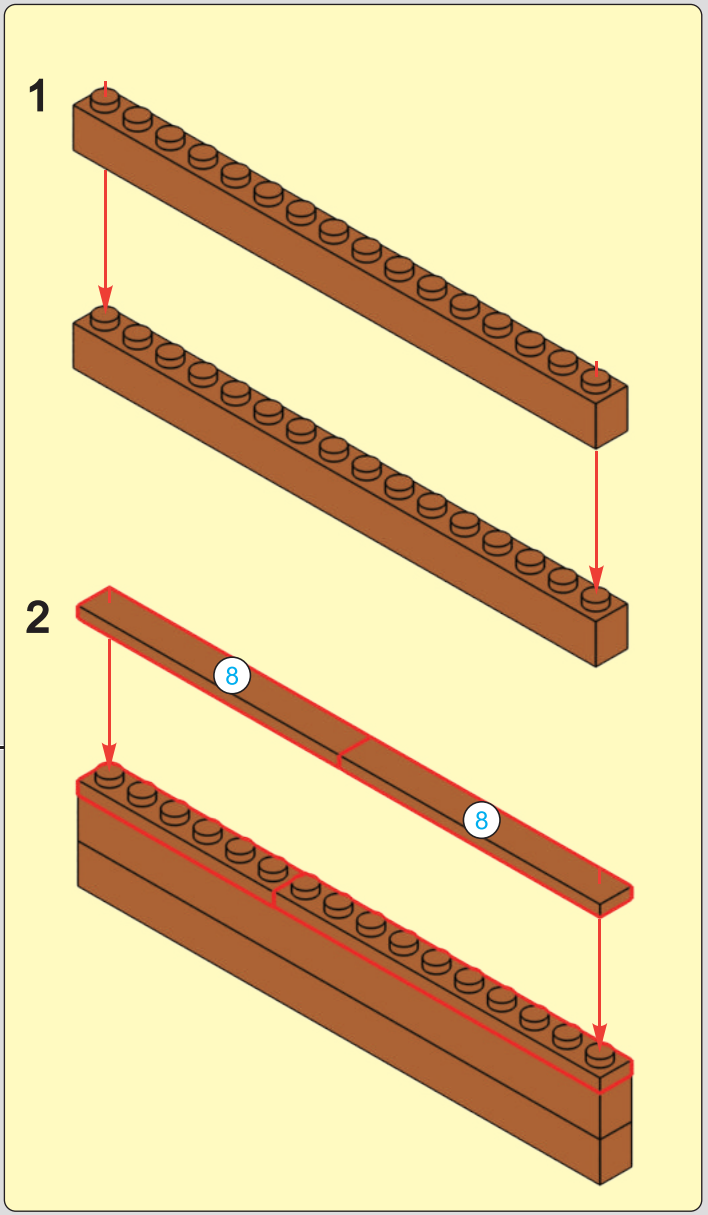

8 1:1

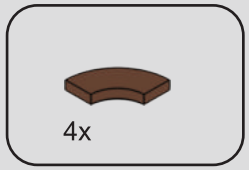

418

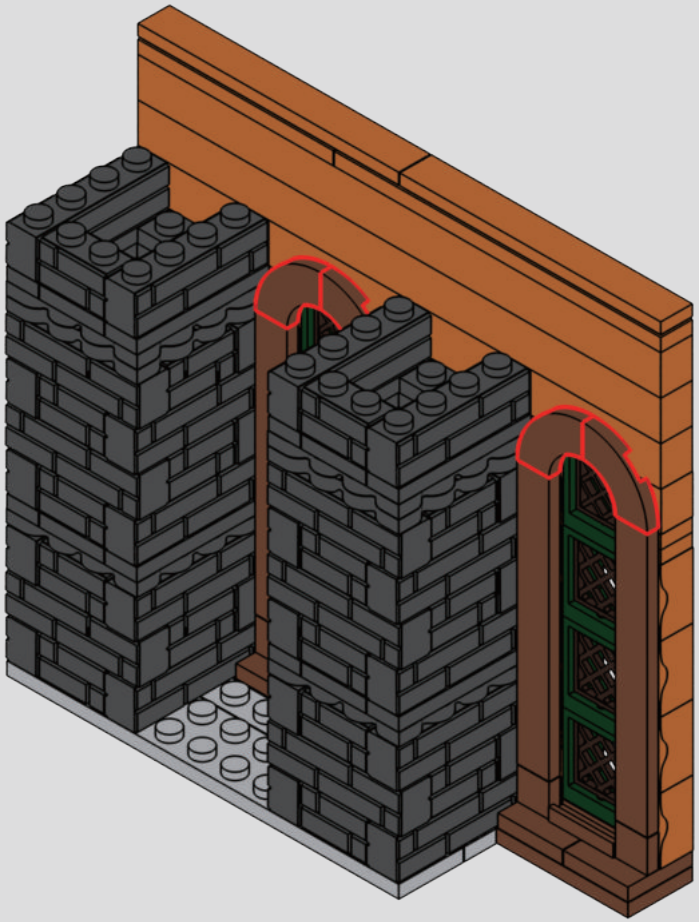

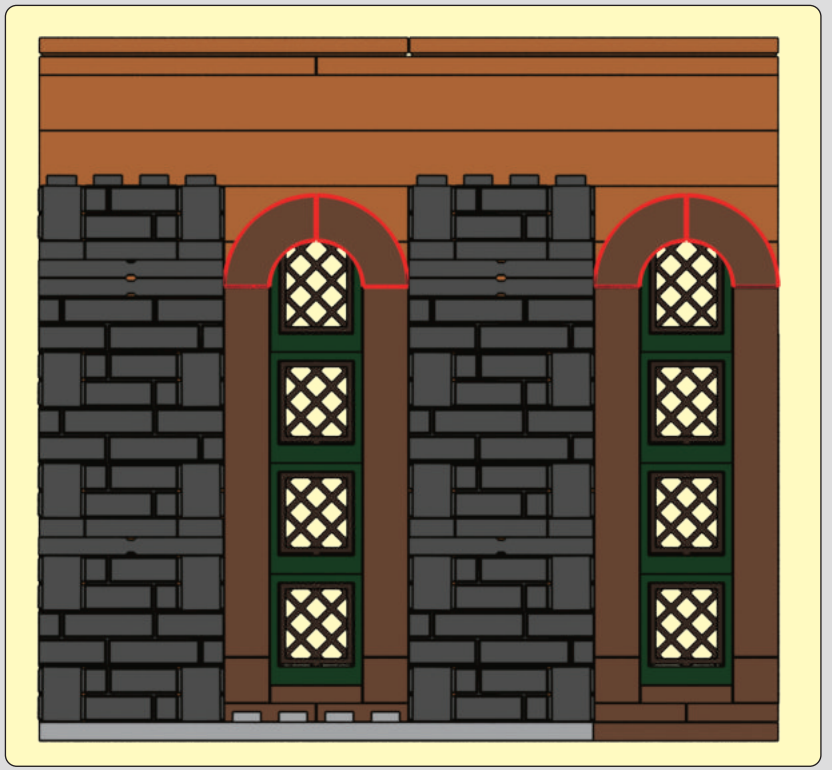

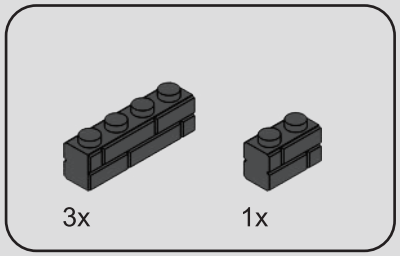

419

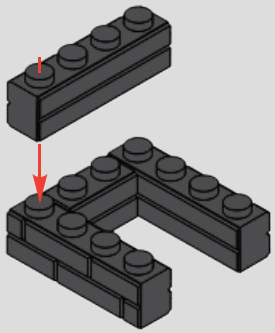

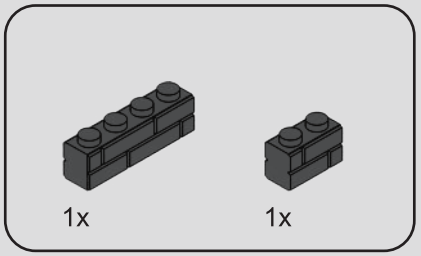

420

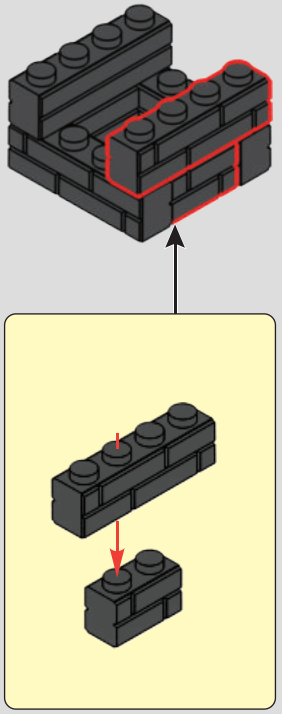

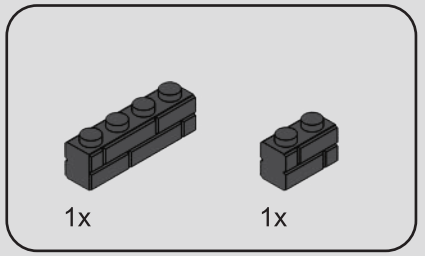

421

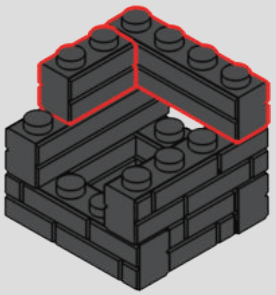

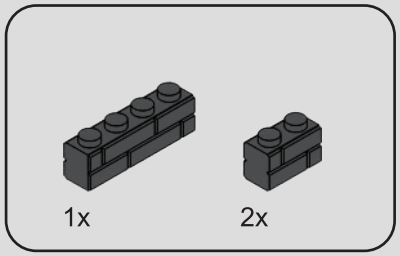

422

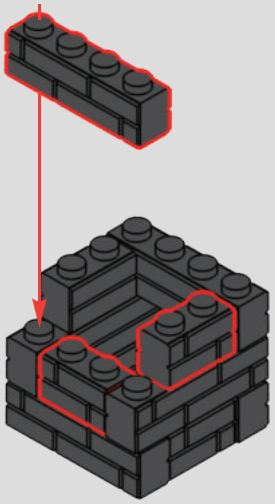

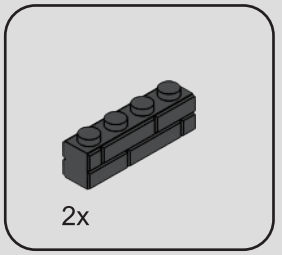

423

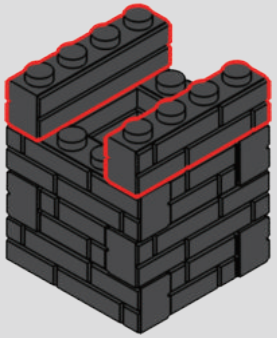

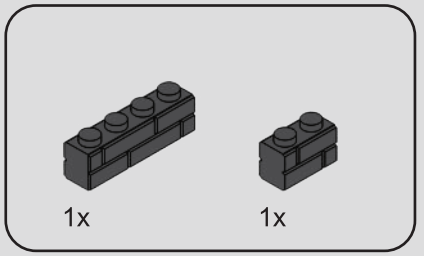

424

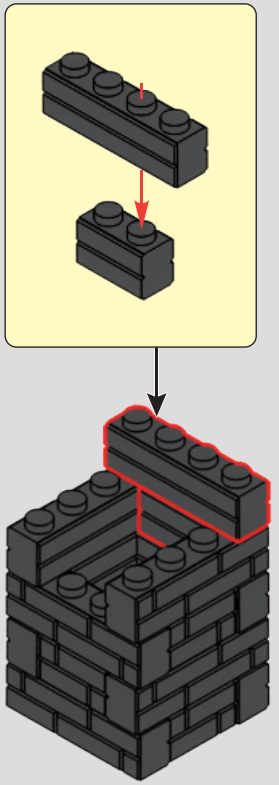

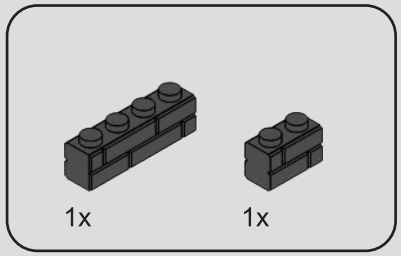

425

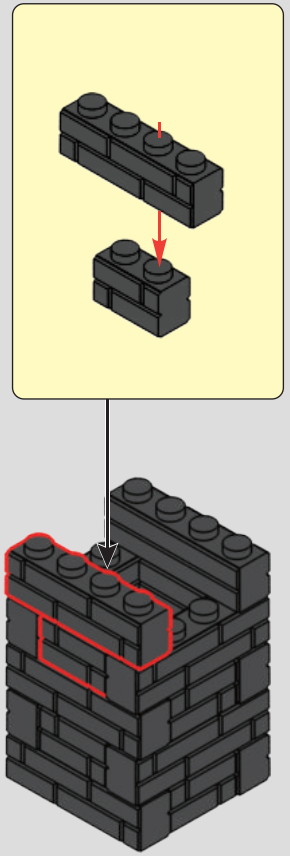

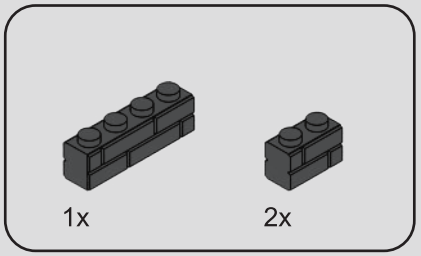

426

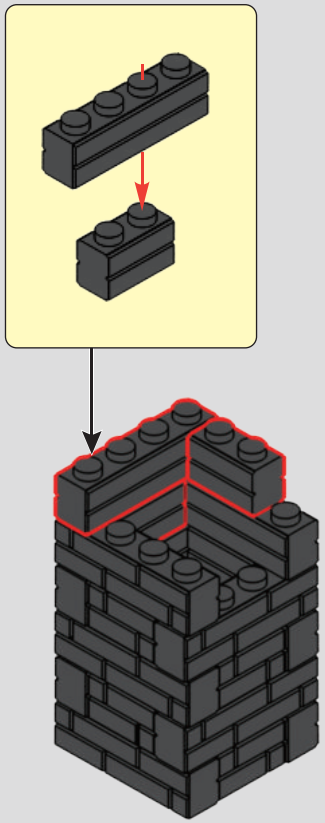

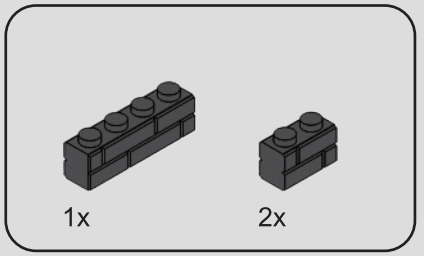

427

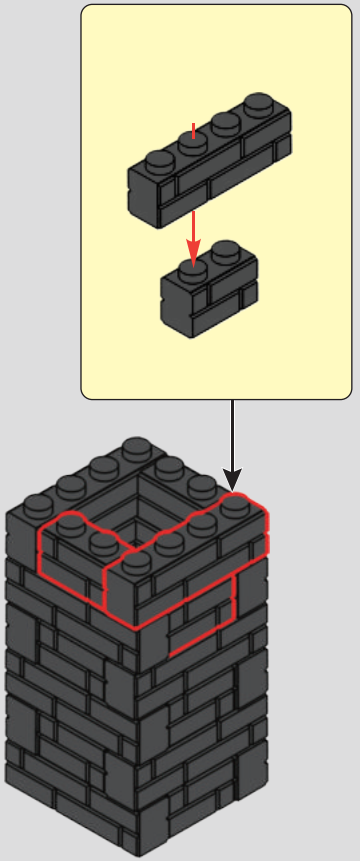

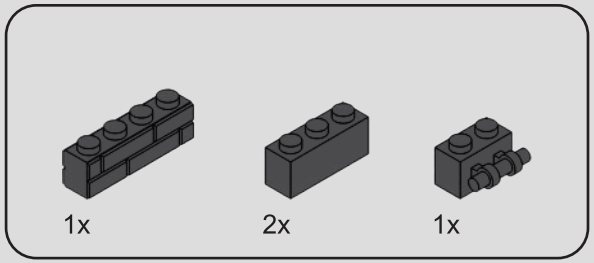

428

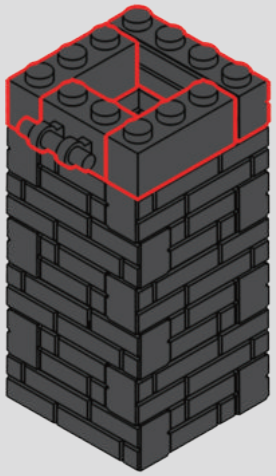

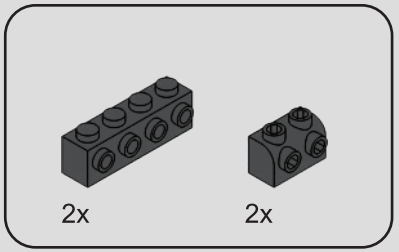

429

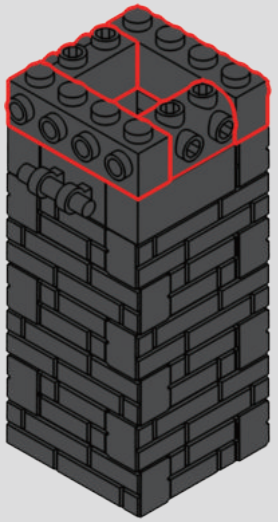

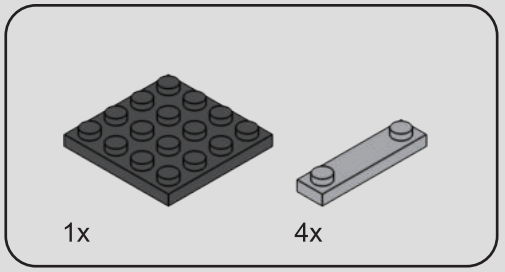

430

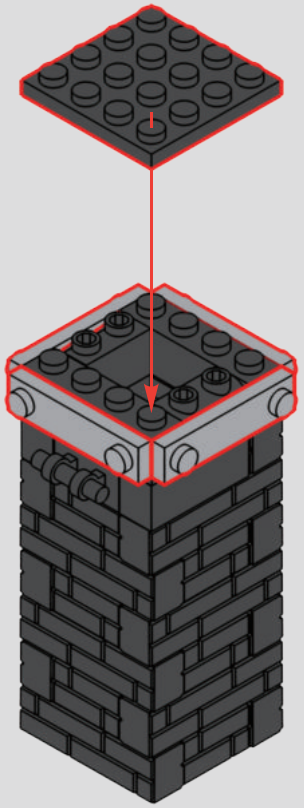

431

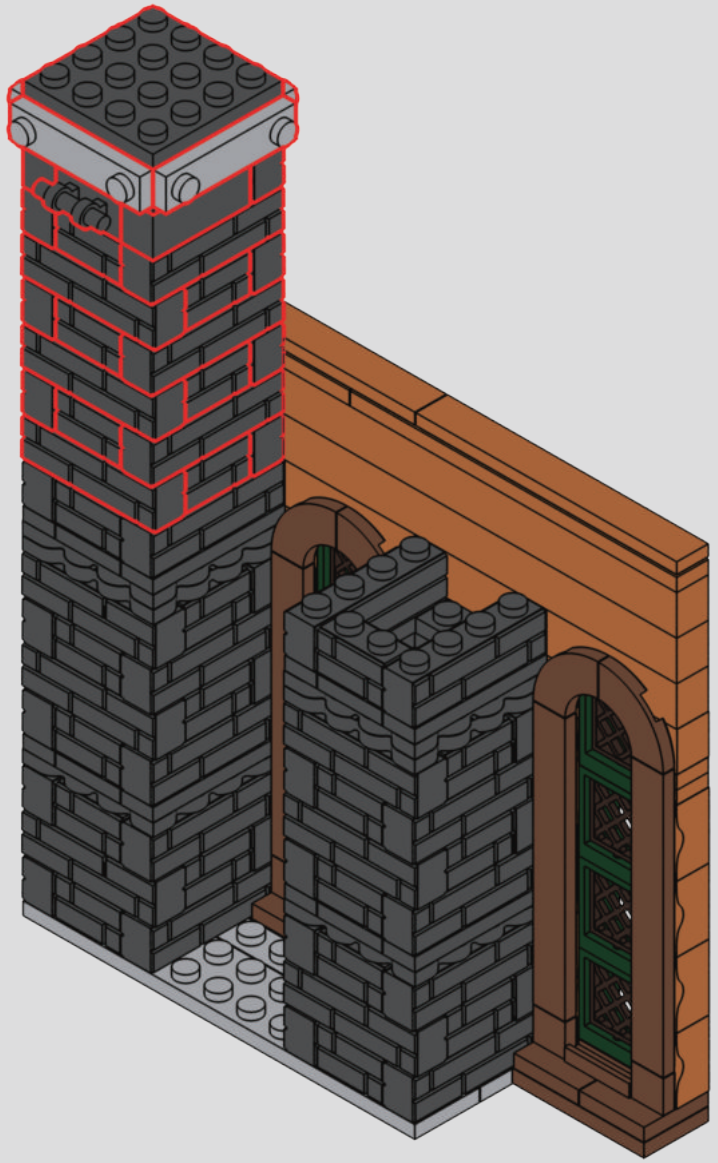

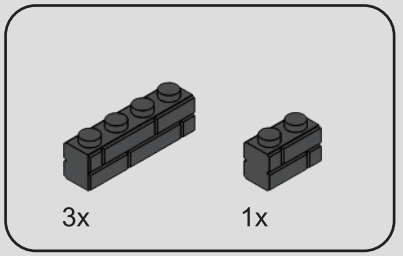

432

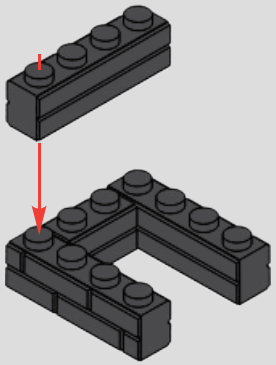

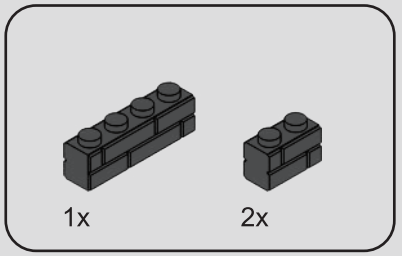

433

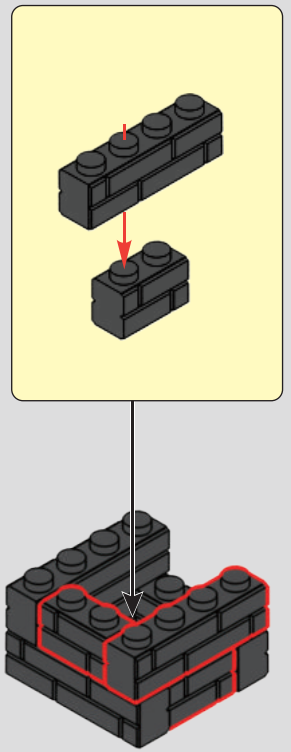

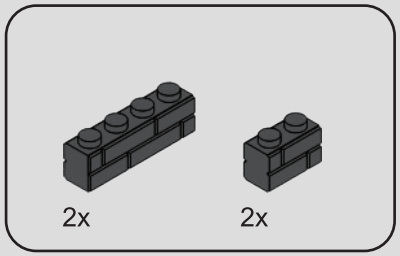

434

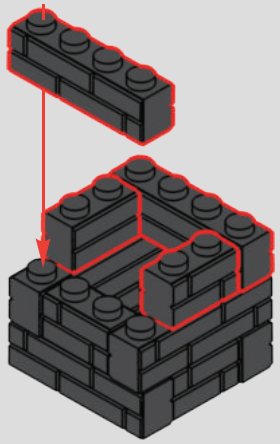

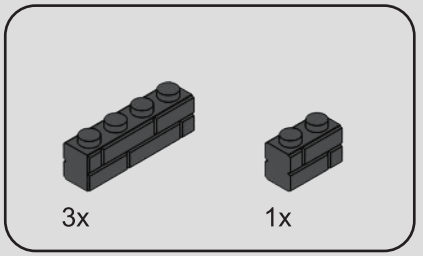

435

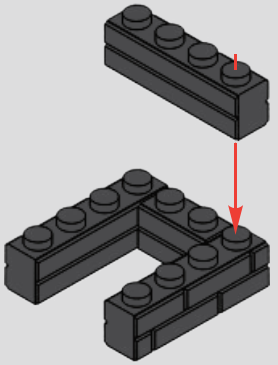

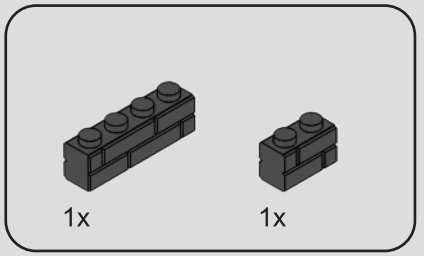

436

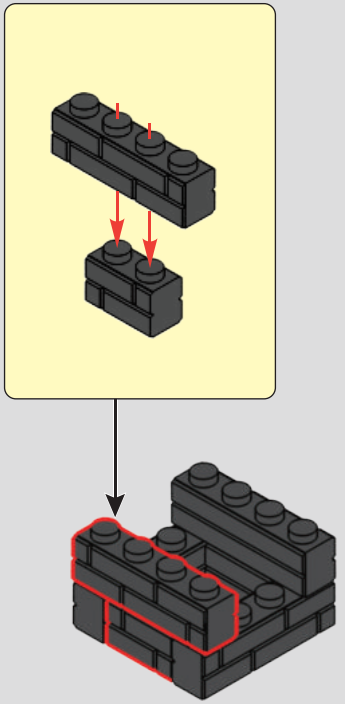

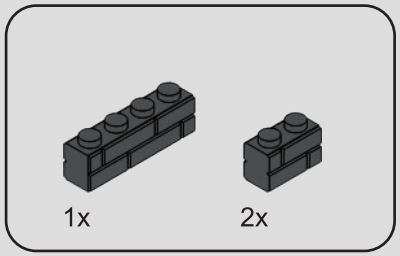

437

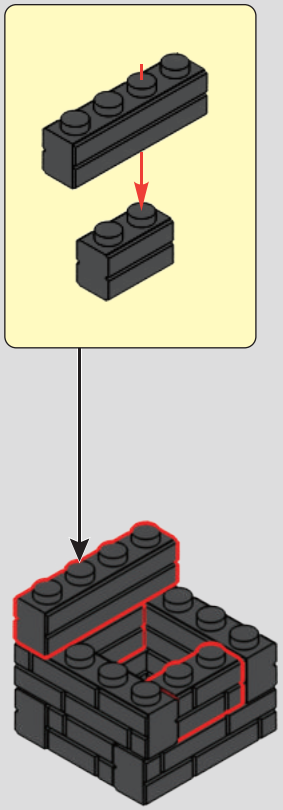

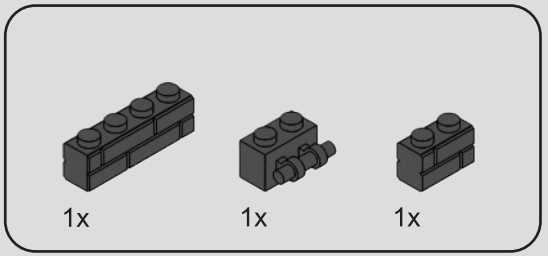

438

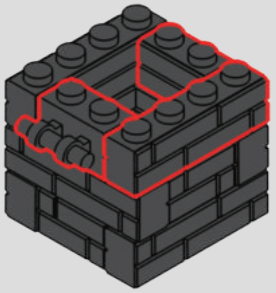

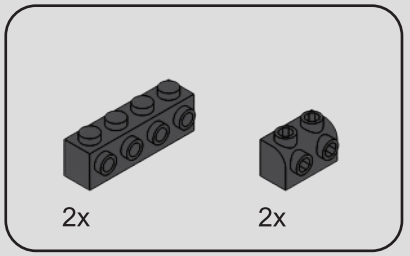

439

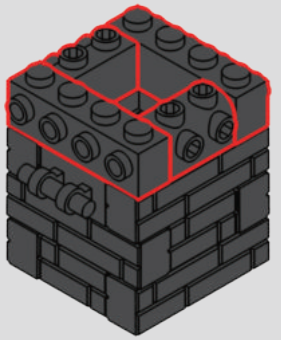

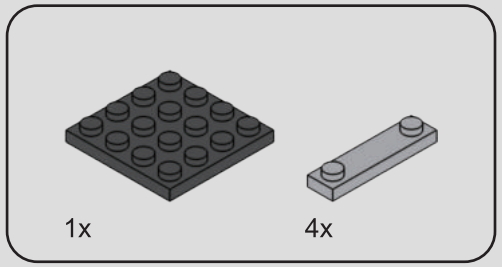

440

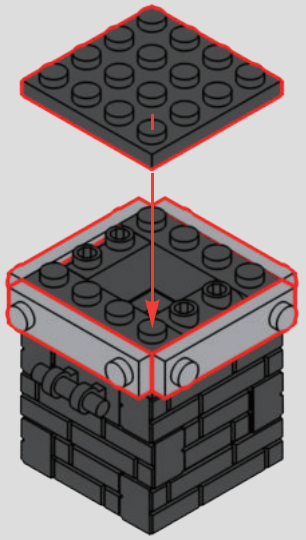

441

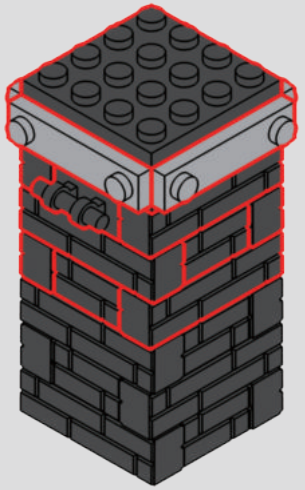

442

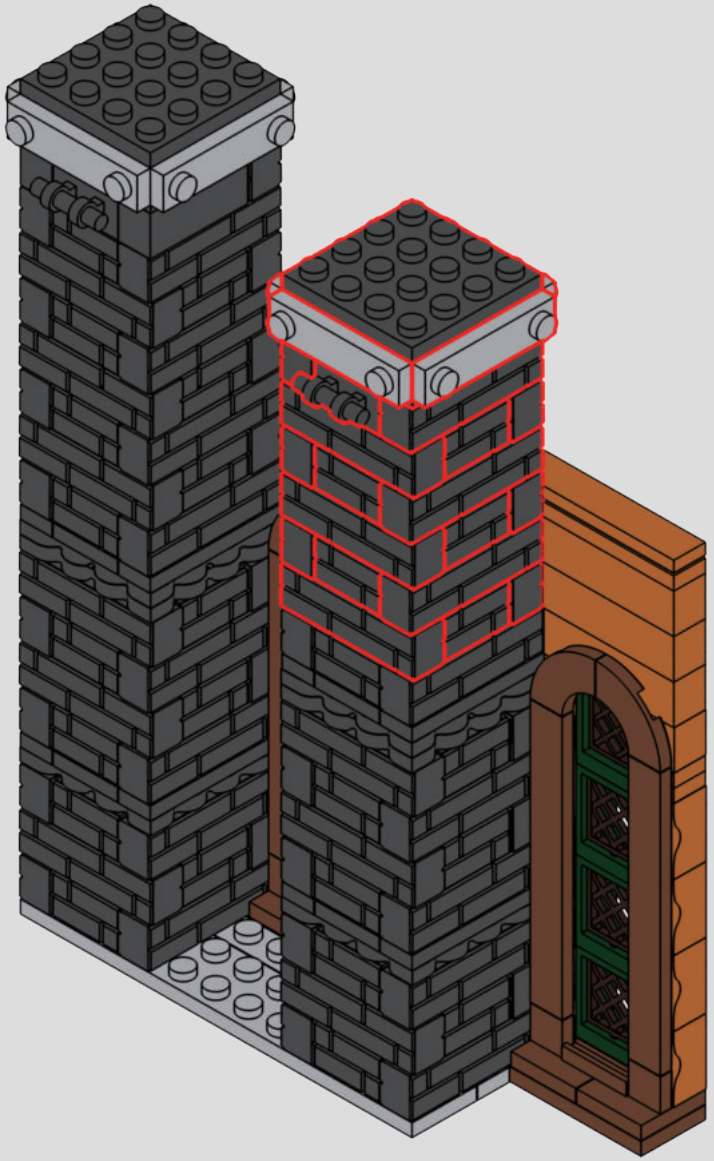

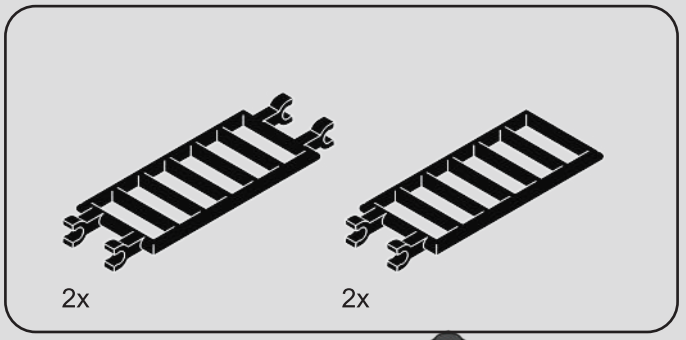

443

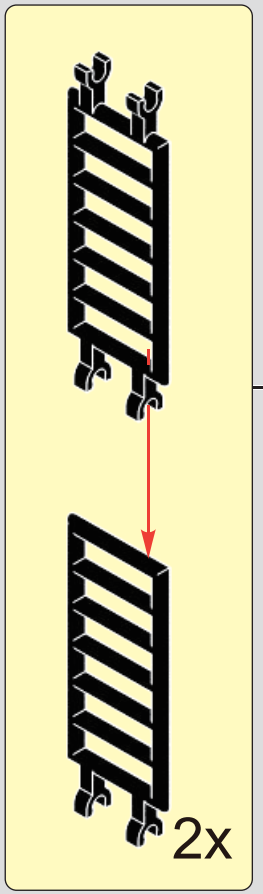

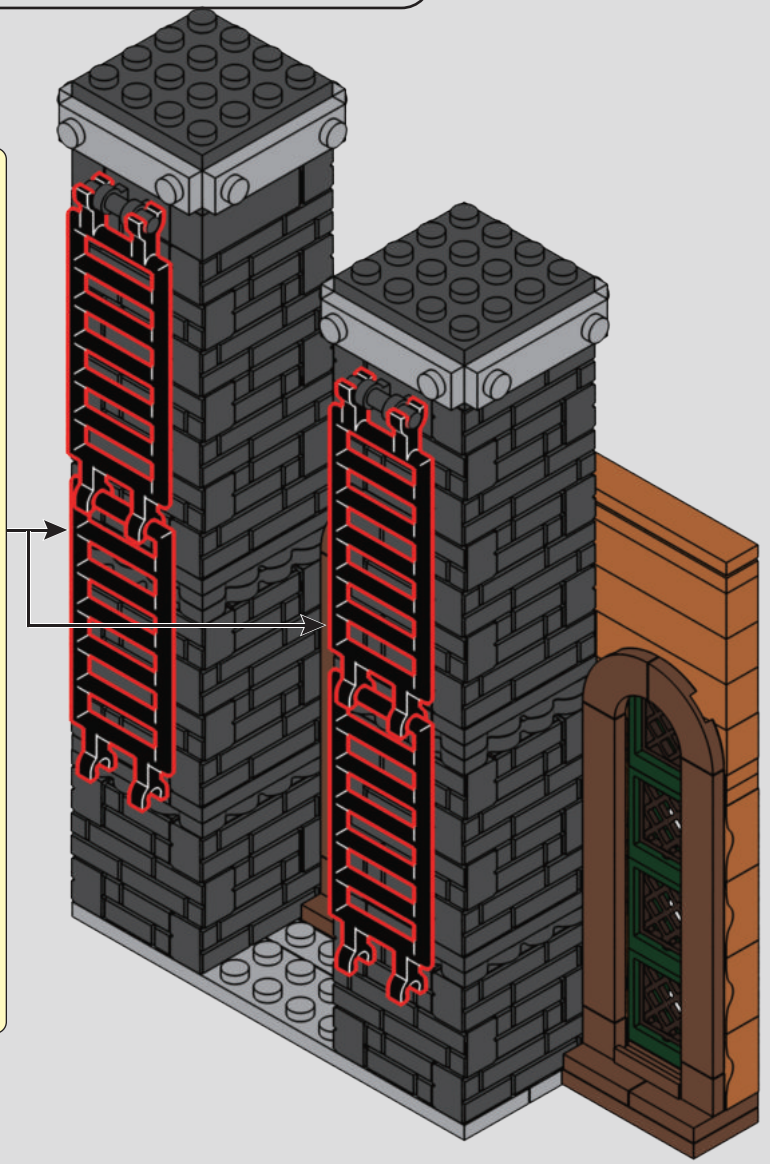

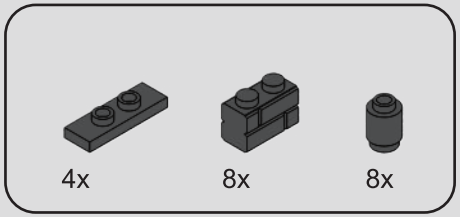

444

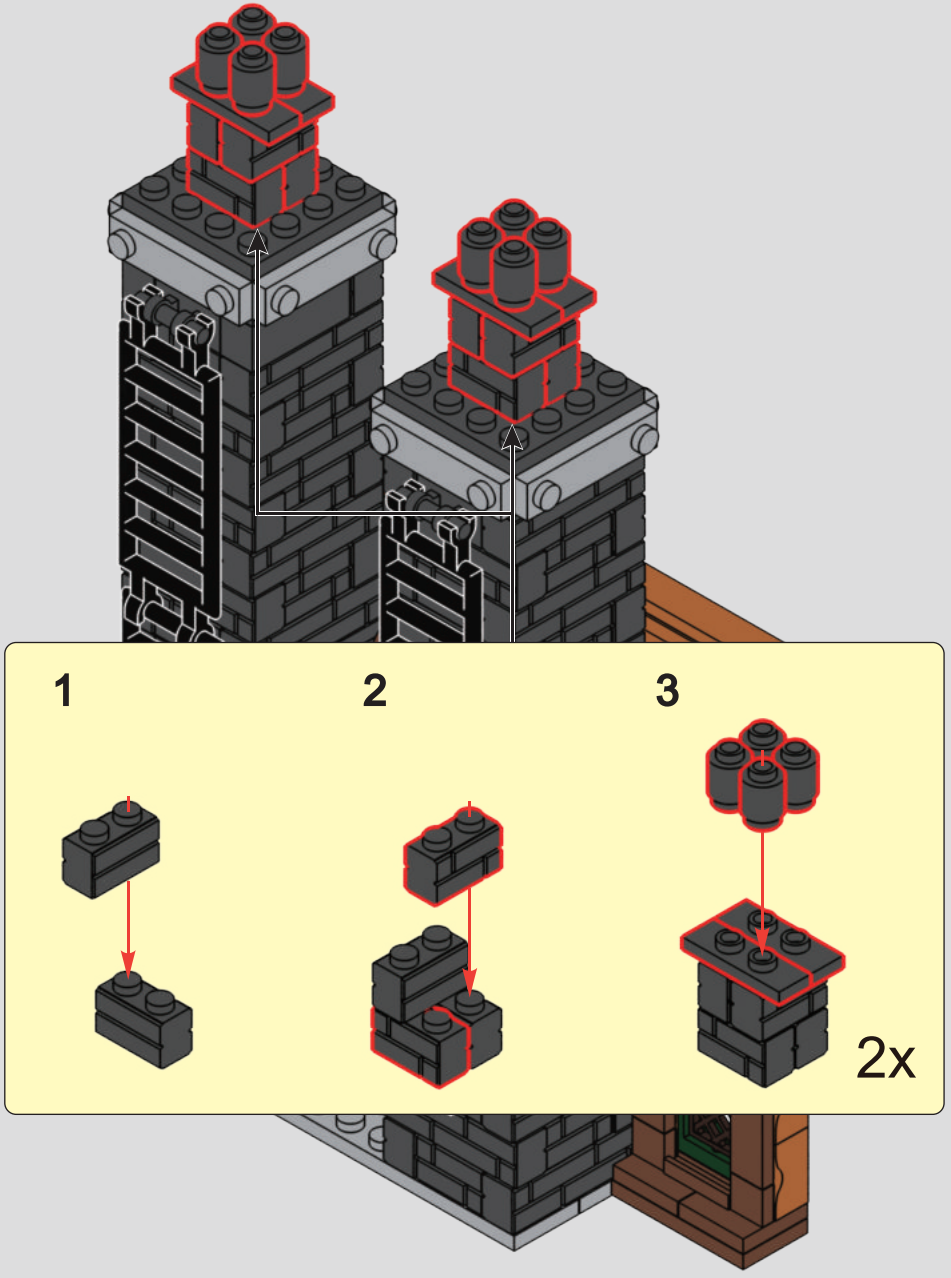

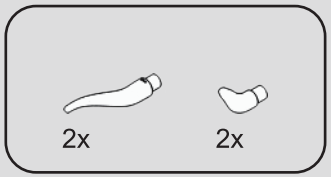

445



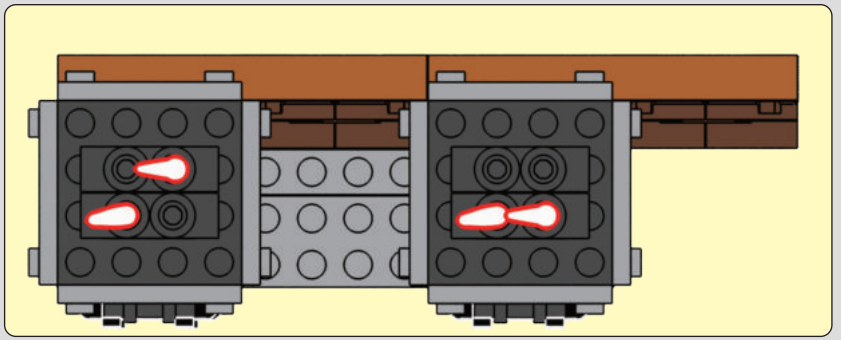

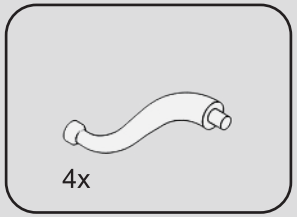

446

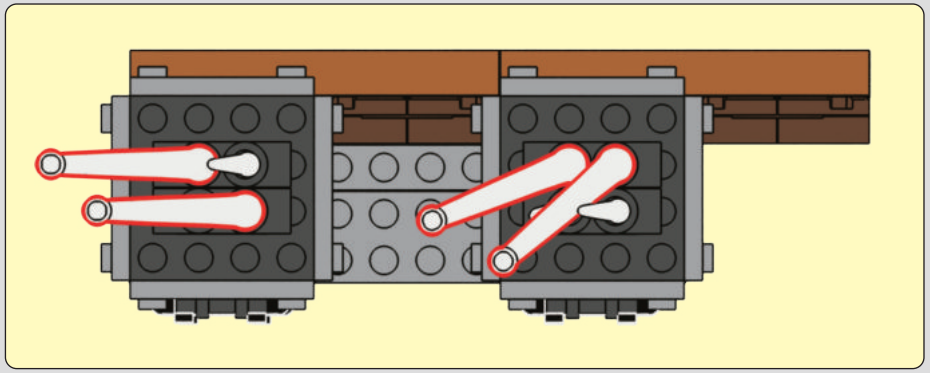



447

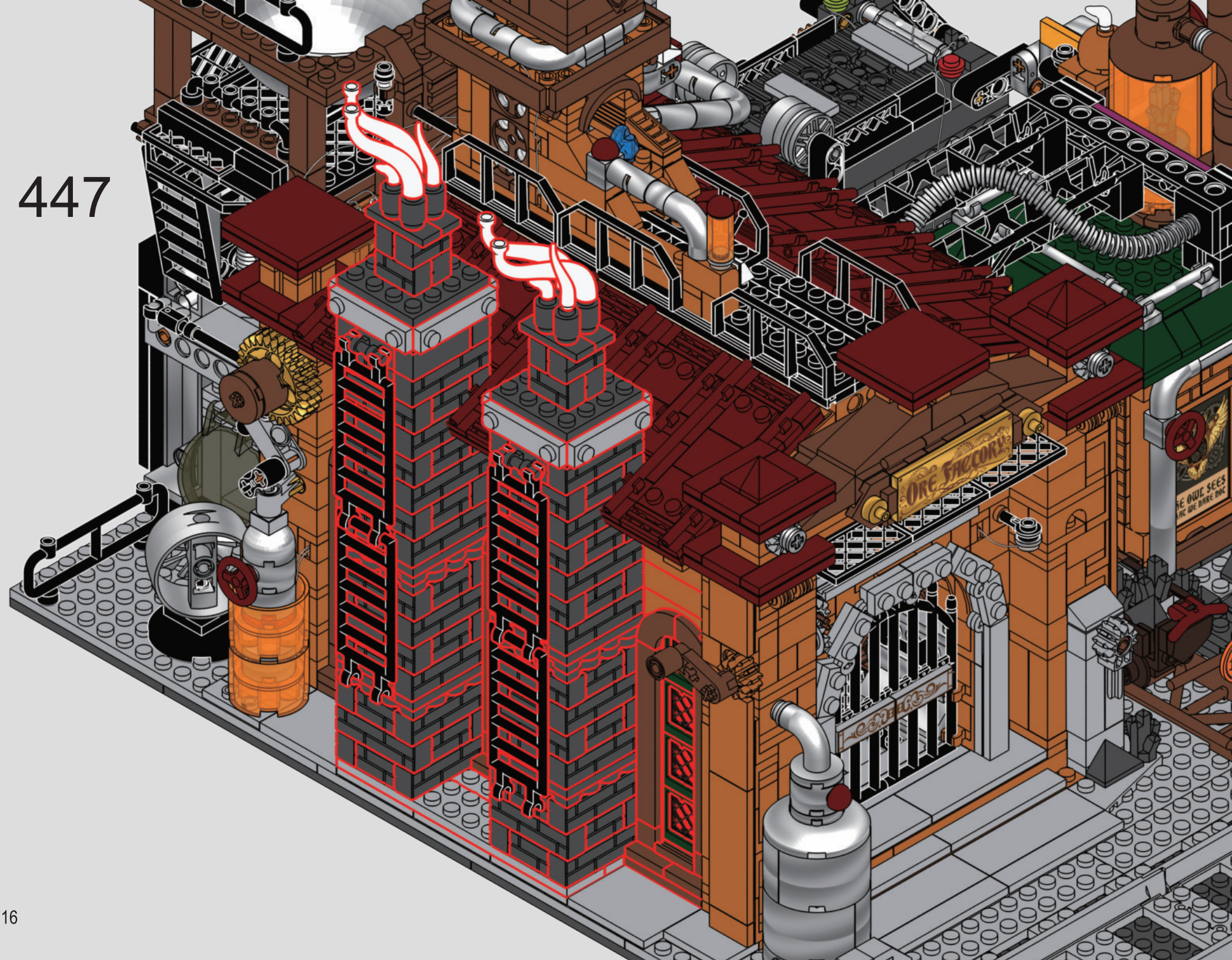

Push part 1 in and wait for the magic to begin...
推入能量晶石，静待奇迹发生...

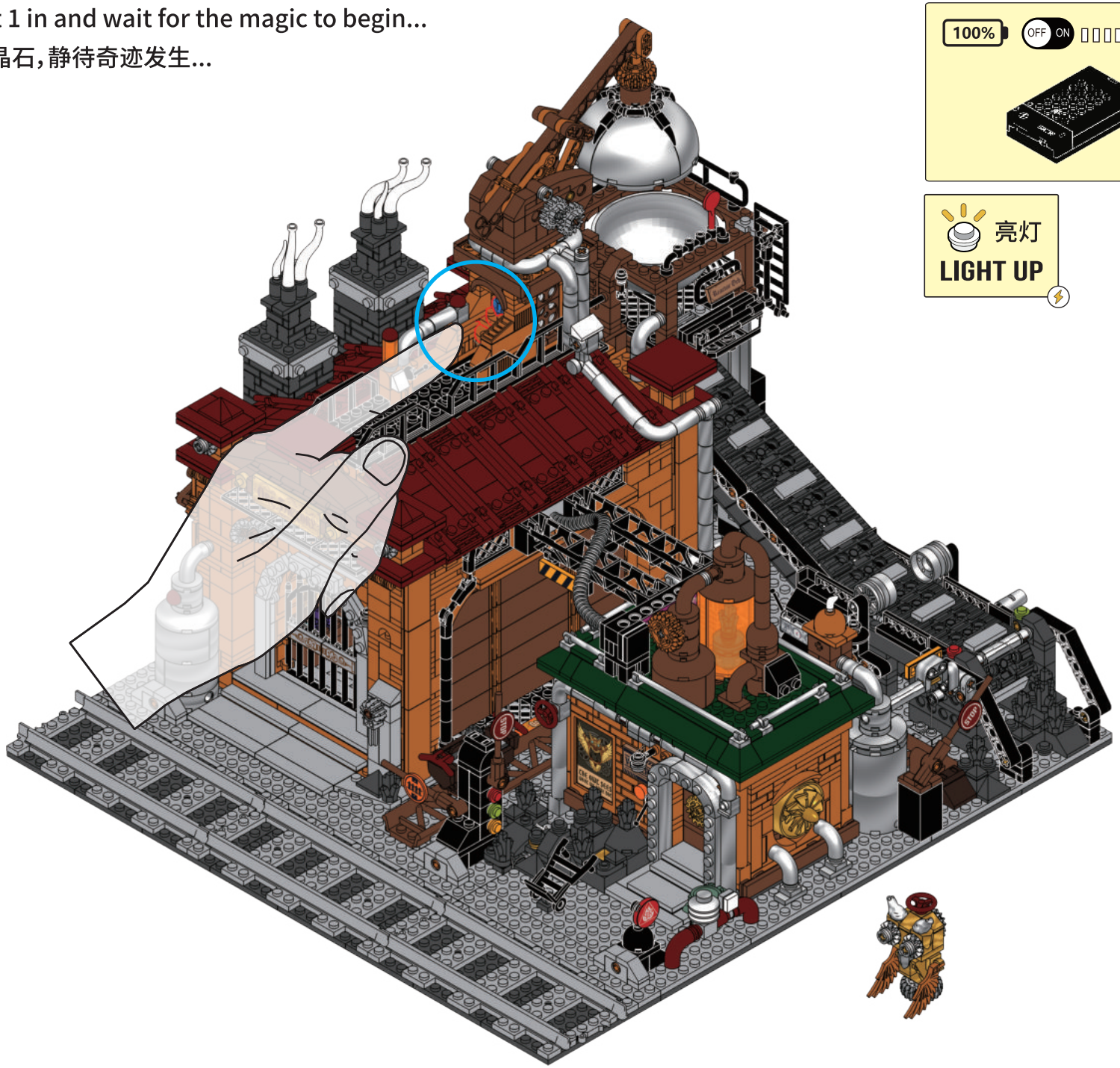

Please turn part 1 will start the conveyor.
请转动零件1将启动传送带。

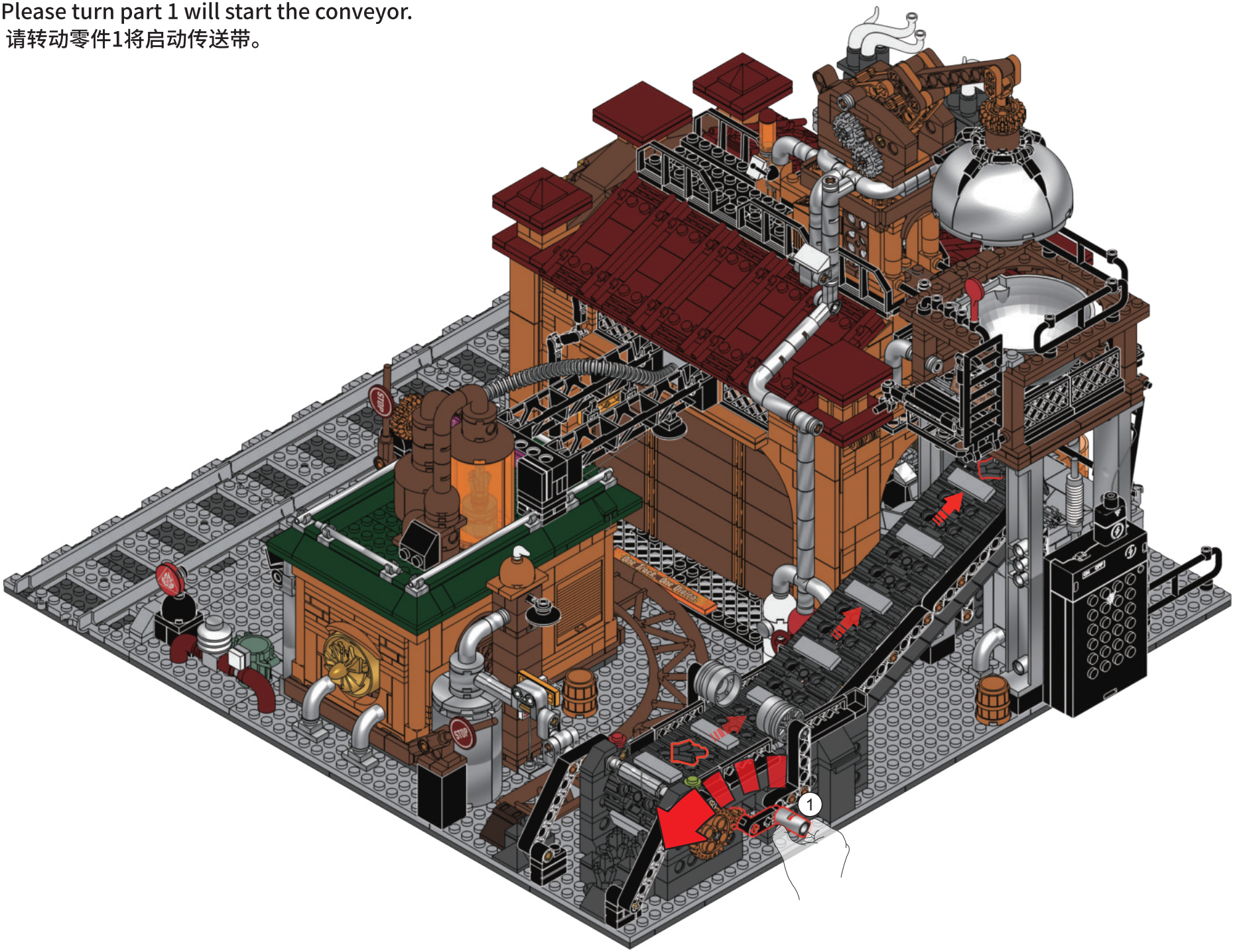

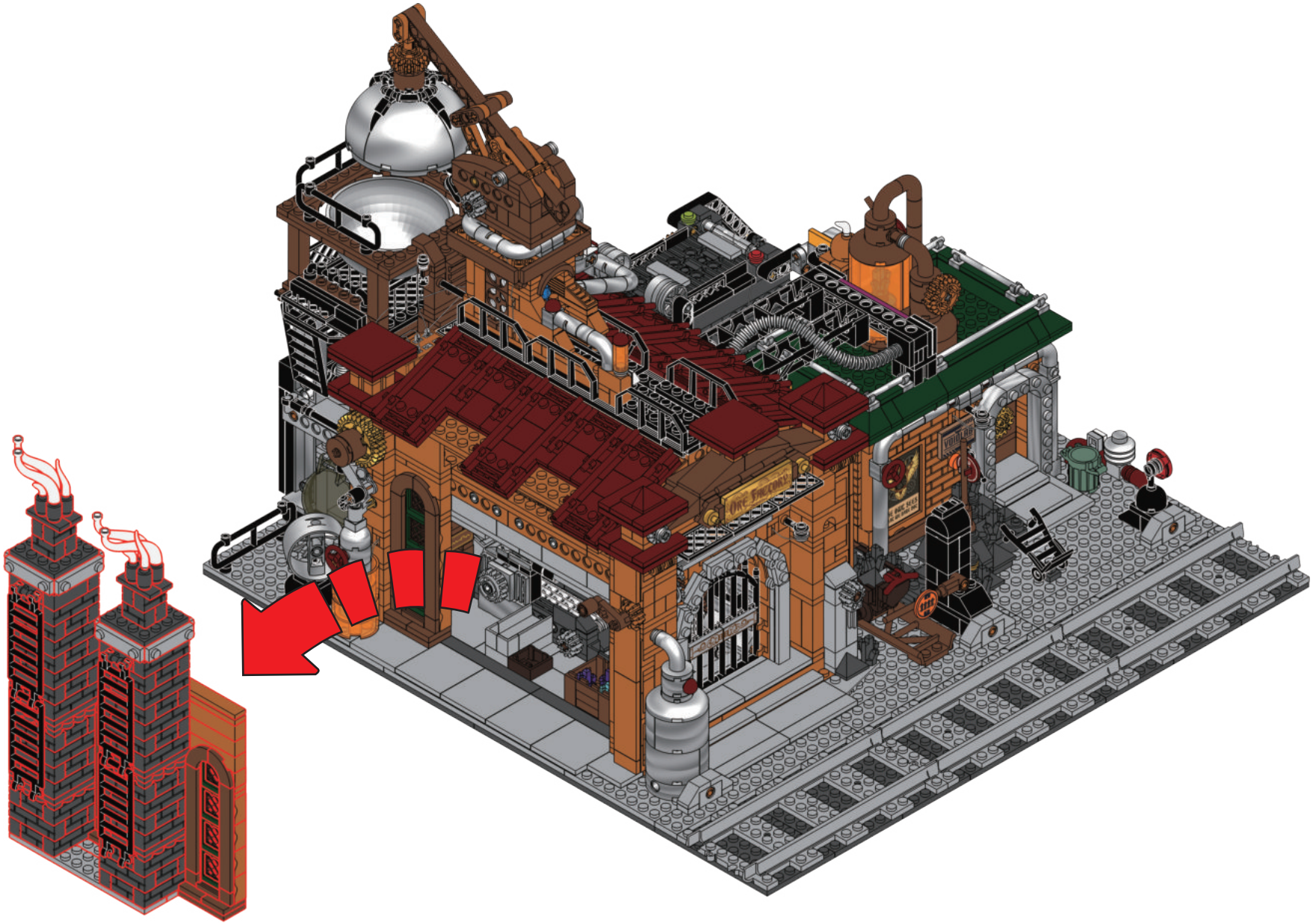

Please turn part 1 will start the conveyor.
请转动零件1将启动传送带。



STEAMPUNK WORLD

We would like your opinion on the new product you have just purchased. Your feedback will help shape the future development of this product series.
Please visit: https://www.lumibricks.com/pages/feedback
We sincerely hope you enjoy the product and we can't wait to see you again soon.Please let us know if we can do anything else to help!

蒸汽朋克系列

感谢您对本系列产品的喜爱与支持，如您在拼搭过程中遇到任何问题，均可通过微信扫描二维码联系企微客服寻求协助。
如果您还有其他意见或者建议，也请务必通过企微客服告知我们，期待与您的再次相遇！

企微客服



• STEAMPUNK WORLD/蒸汽朋克系列



F9067
Steampunk
Motorcycle Pursuit
蒸汽朋克摩托追捕



F9050
Steampunk Flying Club
蒸汽朋克飞行俱乐部



F9047
Steampunk City Bridge
蒸汽朋克城际大桥



F9007
Steampunk Train Station
蒸汽朋克火车站

• TOWN LIFE/小镇生活系列



F9033
Antique Store
收藏品商店



F9031
Book Cafe
咖啡书屋



F9056
Balcony Theatre
流光剧院



F9078
Artisan Gelato Studio
冰淇淋商店

• FARM LIFE/农场生活系列



L9086
Vineyard Estate
葡萄酒庄



F9037
The Cow Barn
奶牛谷仓



F9062
Bee Farm
养蜂场



F9059
Home Greenhouse
家庭园艺温室

• THE OLD WEST/西部系列



F9057
General Store
西部杂货店



F9044
Old West Post Office
西部邮局



F9026
Old West Sheriff's Office
治安官办公室



F9021
Western Saloon
西部沙龙

V1.0

Lumibricks and Lumibricks logo are trademarks of the Lumibricks group.

WWW.LUMIBRICKS.COM

如果您遇到任何问题，请通过以下方式与我们联系：

天猫 小红书

lumibricks灯搭官方旗舰店

会员中心