
F.O
DELIGHT DAY AND NIGHT
F9074
1640 PCS
16+
La Brisa
LU 8104 HM
Set Sail From Here.
— La Brisa the Sailboat
Name: La Brisa
Scale: 1 : 24
Type: Sloop
Scan the QR code
for a PDF instruction
LA BRISA
THE SAILBOAT

ABOUT FUNWHOLE

'FUNWHOLE' is a combination of the words "fun" and "whole", meaning "the whole fun of both day and night".

Founded in 2014, based on the desire to fully express the whole beauty of bricks (in day and night), FUNWHOLE is the world's first lighting bricks manufacturer.

FUNWHOLE is dedicated to the lighting bricks product, with a combination of bricks and lights. FUNWHOLE was birthed out of lights and bricks, allowing lights shine through your bricks and bring your night bricks to life.

As the pioneer to bring the first lighting bricks, FUNWHOLE was created to bring back brightness to the night world, making day and night whole with the lighting fun.

Engaged in building a creative brand, brick by brick, light by light, FUNWHOLE strives to bring fun and joy to millions of people.

FUNWHOLE creates more than bricks but also makes the lights shine through bricks, hoping every building brick lover can enjoy the beauty of lighting!


N
W
E
S

One day at the office, a sailing video ignited my longing for the open sea and the dream of sharing a nautical journey with friends, inspiring our team to create the La Brisa sailboat.

We crafted its sleek hull, sharp bow, and wide stern with bricks to mirror a real sailboat's elegance. Inside, thoughtful details—a ship log, a cozy galley, a guitar, and a navy hat—evoke the charm of a free-spirited life at sea.



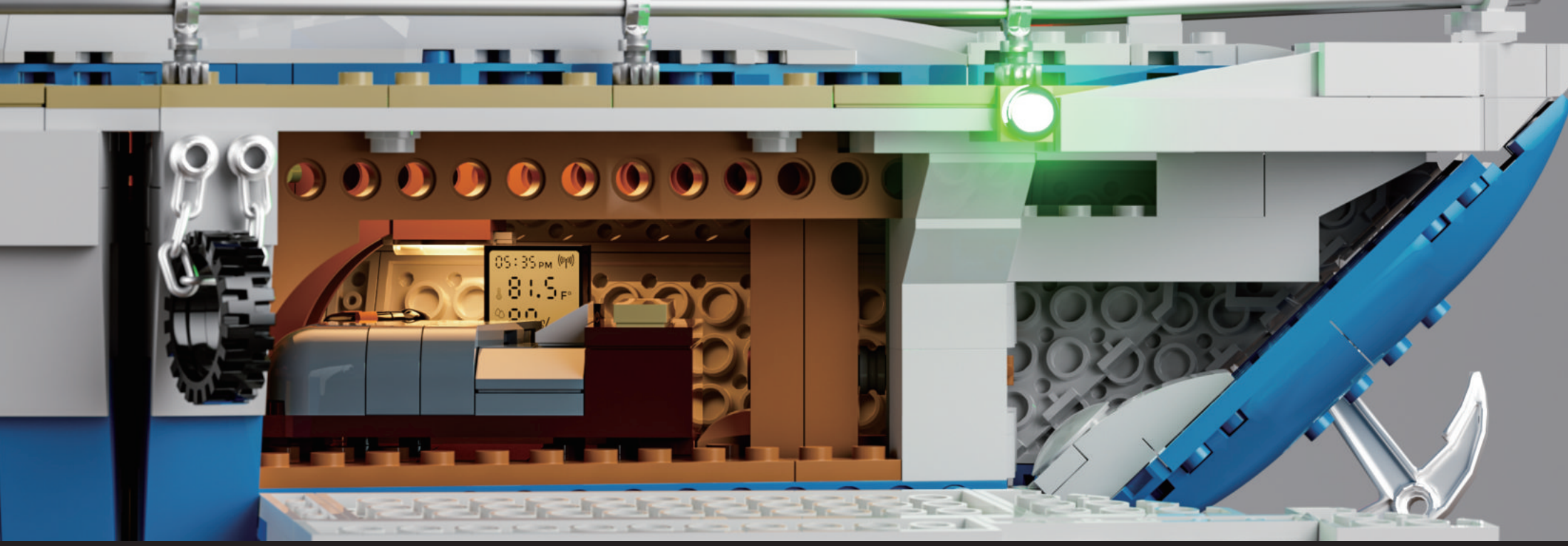

We've even designed the hull's sides to open up, revealing the interior spaces in all their charm. My hope is that when you build it, you'll feel the same gentle breeze that inspired us.









USAGE OF BRICK SEPARATOR



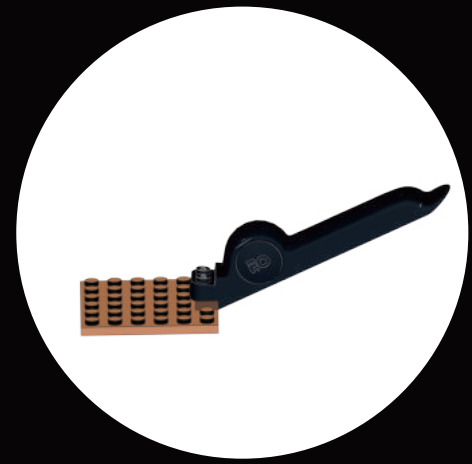



Special thanks to Dennis Back, Nicholas Smurthwaite, Achim Kaiser, Stacy Froese, Ryan Preatto, Pascal Modjesch, abisco66, Damien Heurtaux, Daria Epaneshnikova, and Paul Urbanski, who generously shared their insights, experiences, and creativity during the development of this model.

WHAT'S INCLUDED

Please check and make sure you get all the items listed below.

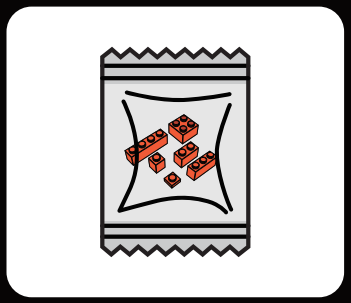

Building Bricks



LED Light Kit

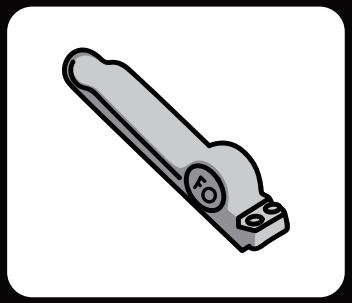

Brick Separator

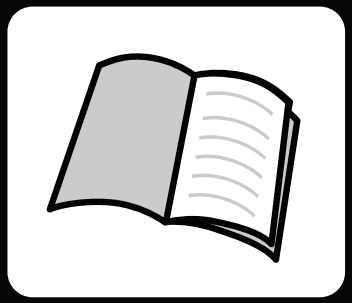

User Manual

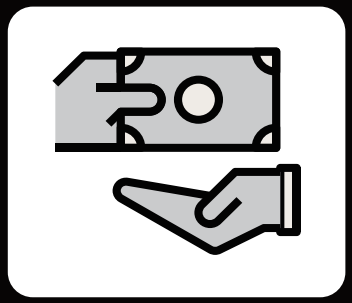

Service Card

TROUBLESHOOTING

The small size of lighting accessories makes them susceptible to damage during installation, and the following issues are common causes of failure:

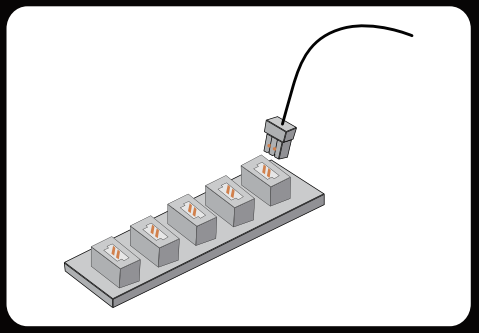

1.Ensure that the connectors are correctly installed as shown in the picture.

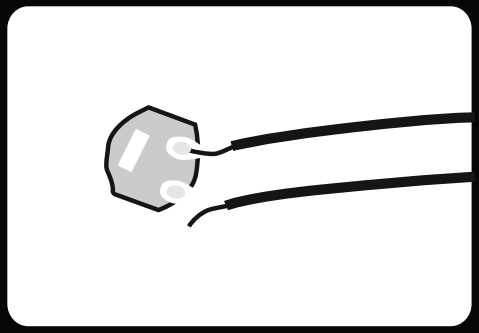

2.Check if the wires are disconnected or broken from the solder joints.

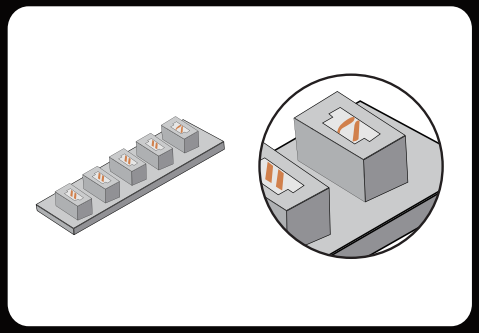

3.Check the internal pins of the connector sockets. The internal pins of a properly working connector port should be straight. If the small pins are bent, they may be considered faulty ports.

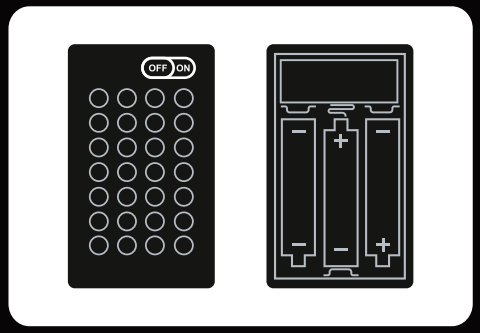

4.Check that the power switch on the battery box is on and that the "+" and "-" poles of the battery are correctly placed (using new batteries) and ensure that the upper and lower connections to the "+" and "-" poles of the power switch are installed correctly.

If you have checked each string of lights according to the guide above and the lights still do not light up, please contact our customer service for assistance.

LED LIGHT KIT PACKAGE LIST

Please check and make sure you get all the lighting accessories. Contact us if there are any missing components.

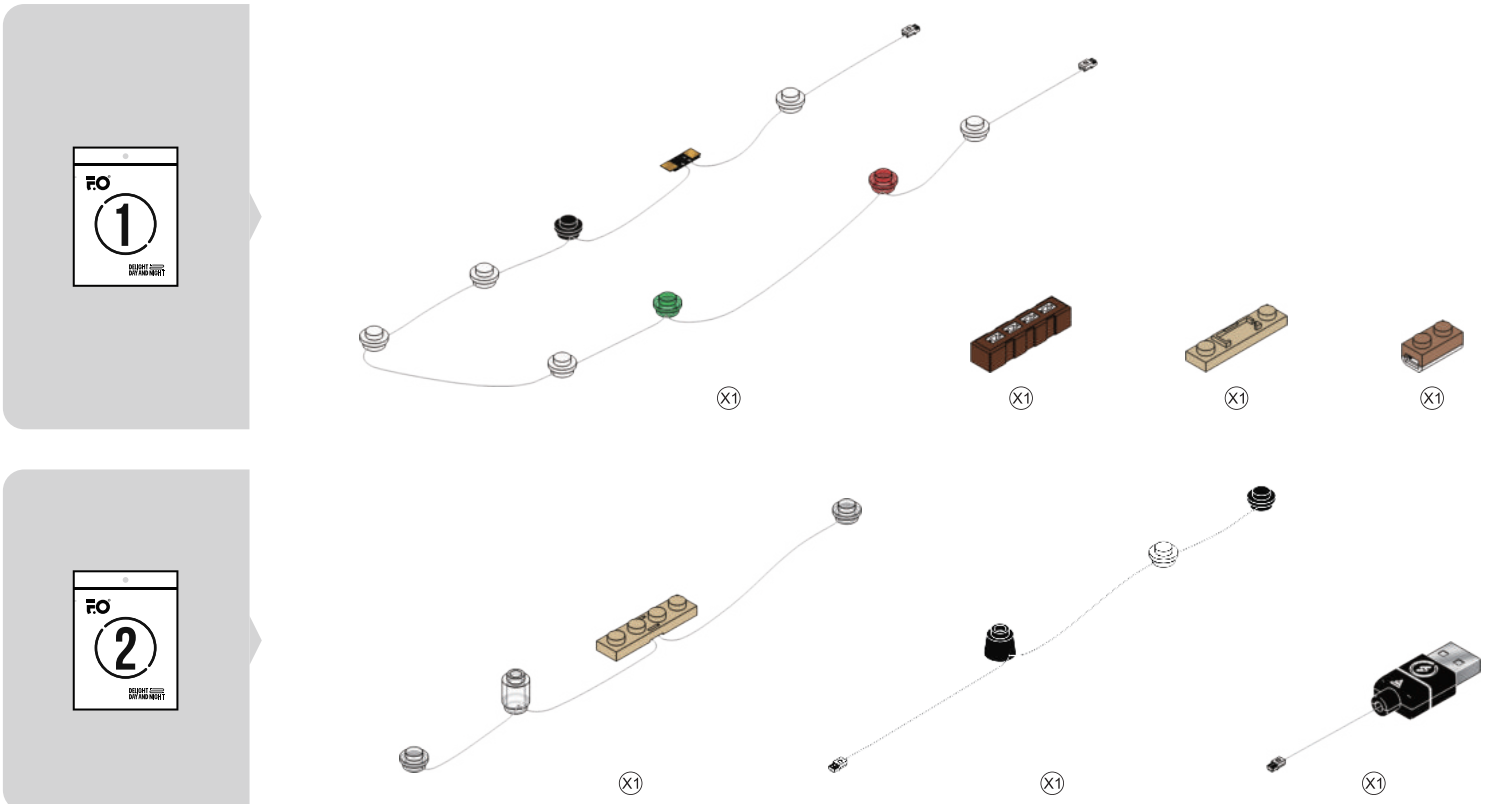

Note: when installing, don't pull it hard, bend it or shake it to avoid damage. The supply voltage should be below 5V, and the button battery holder voltage can be below 6V. Not for children under eight.

SAFETY PRECAUTIONS

1. Before use, please make sure to check the voltage to avoid damage to the product and potential safety hazards.
2. The lights in the product are not replaceable. If they are damaged or not lighting up, please refer to the troubleshooting section or contact our customer service for assistance.
3. Avoid pulling on the light connection wires as this may cause damage.
4. Do not expose the product to water as it may damage the product.
5. Please read and follow the instructions carefully during building to ensure a good building experience.
6. This product doesn't include batteries or power banks. Please prepare your own batteries or power banks to power the LED light kits.

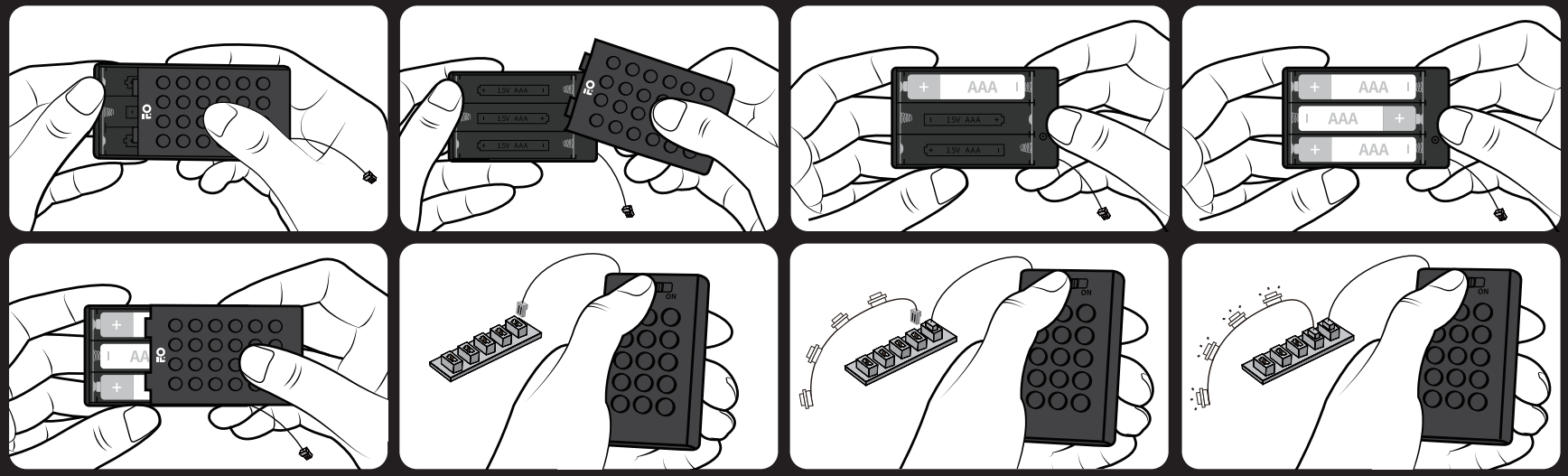

Battery box name: No. 7 block battery box Battery type: AAA*3 (No. 7) Battery rated voltage: 1.5V

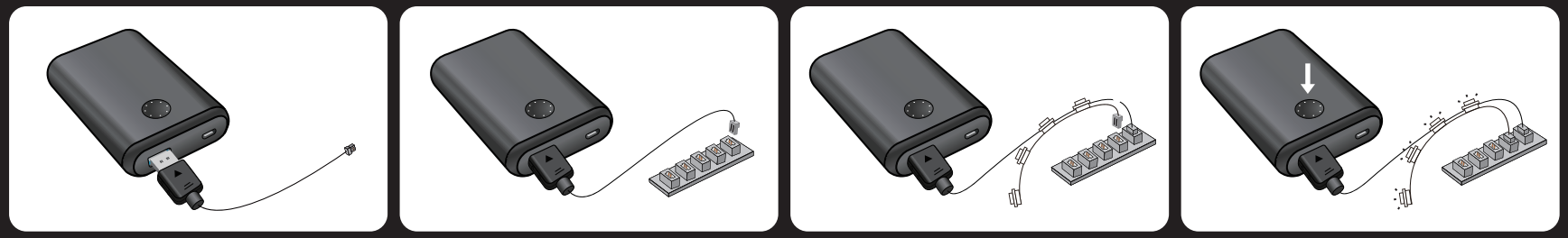

LED LIGHT KITS INSPECTION GUIDE

1.To enhance your experience,please check the LED Light Kits according to the guide before starting assembly.
2.After inspection,please return the LED Light Kits to their original bags for future use.
3.If any issues occur,please contact customer service.

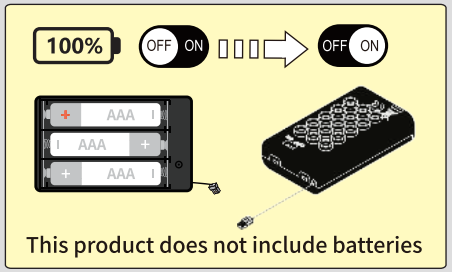

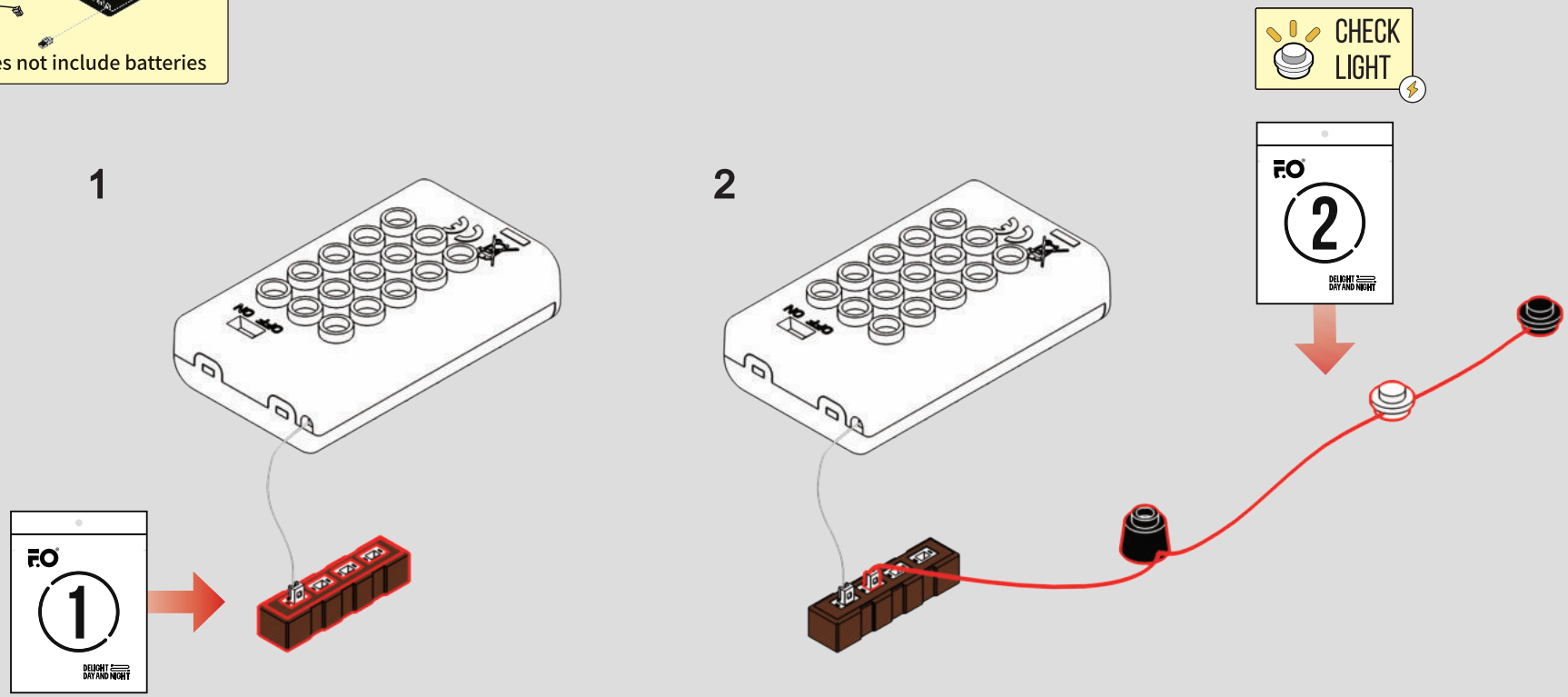

3

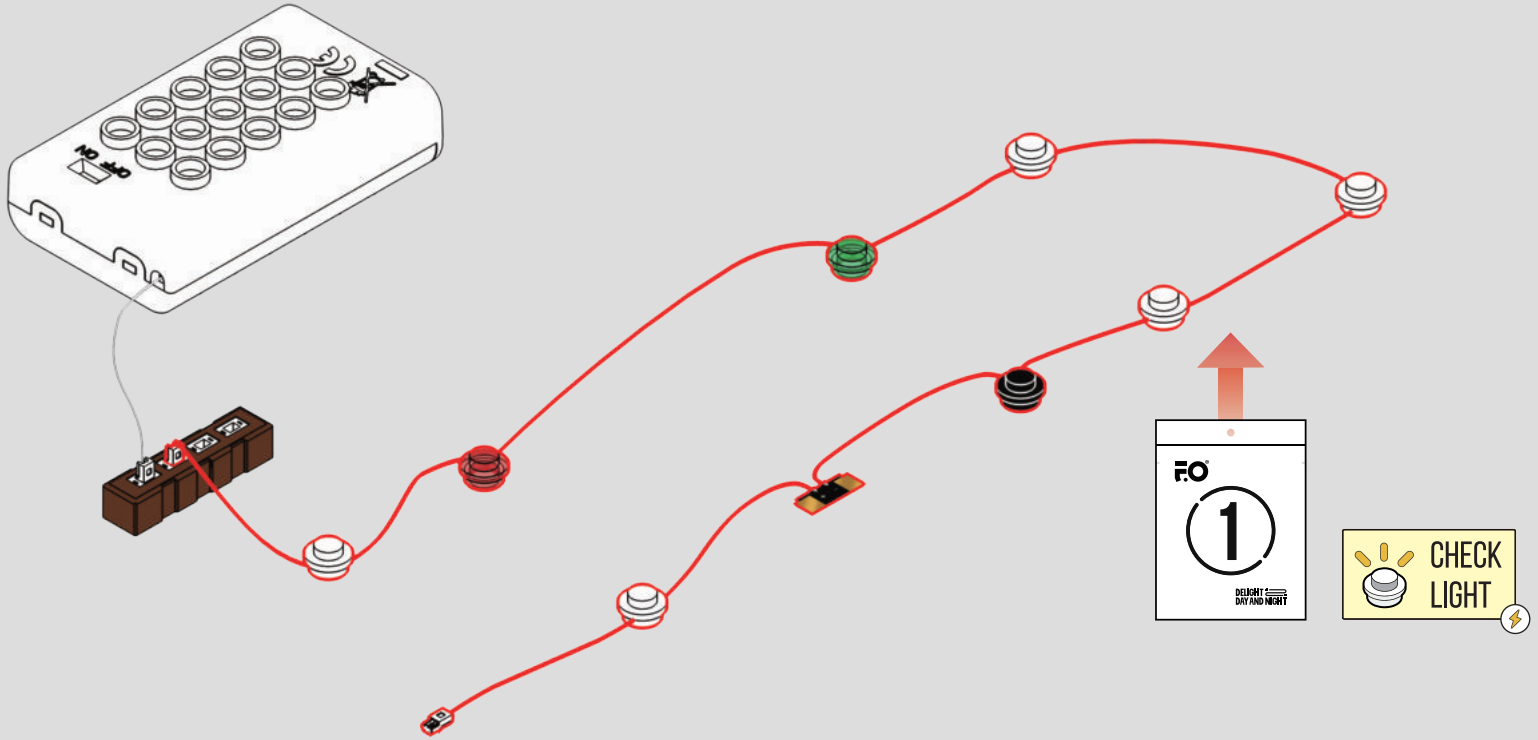
F.O
1
DELIGHT DAY AND NIGHT
CHECK LIGHT

4

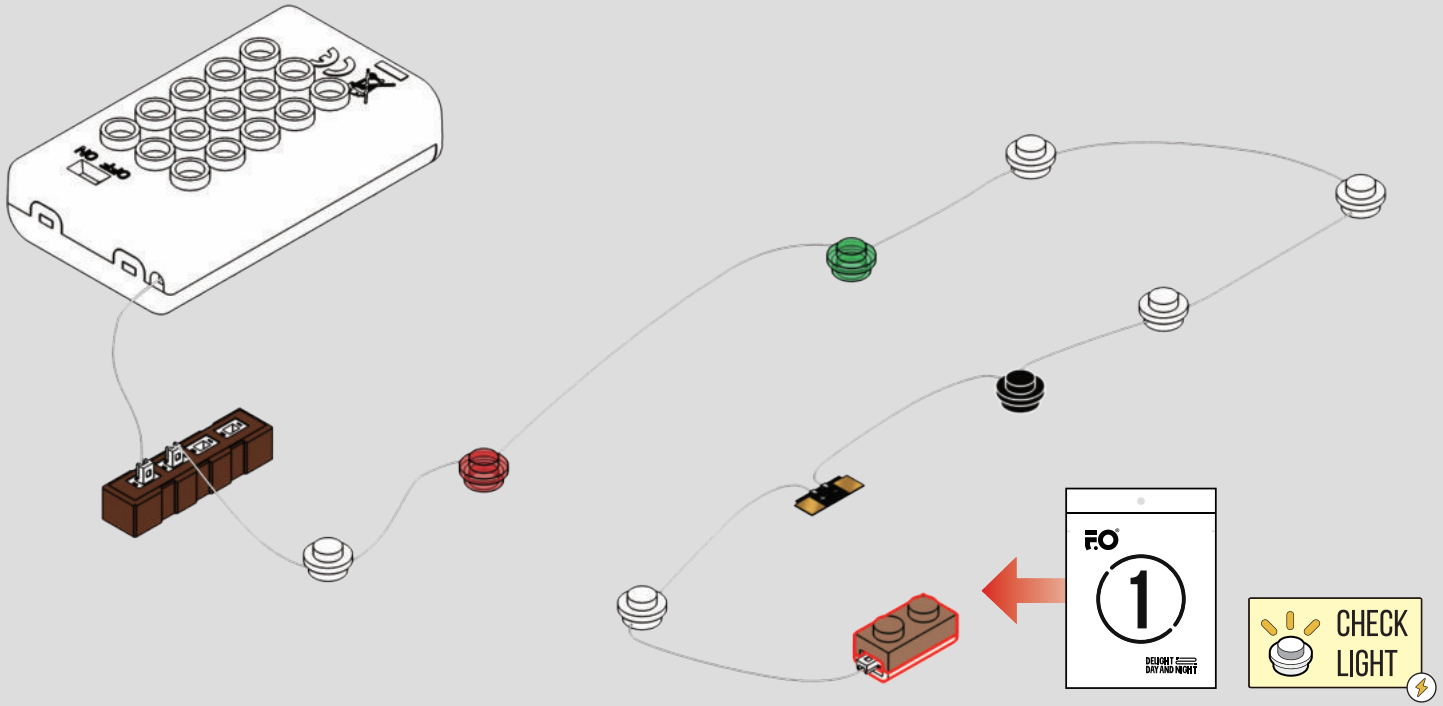
F.O
1
DELIGHT DAY AND NIGHT
CHECK LIGHT

5

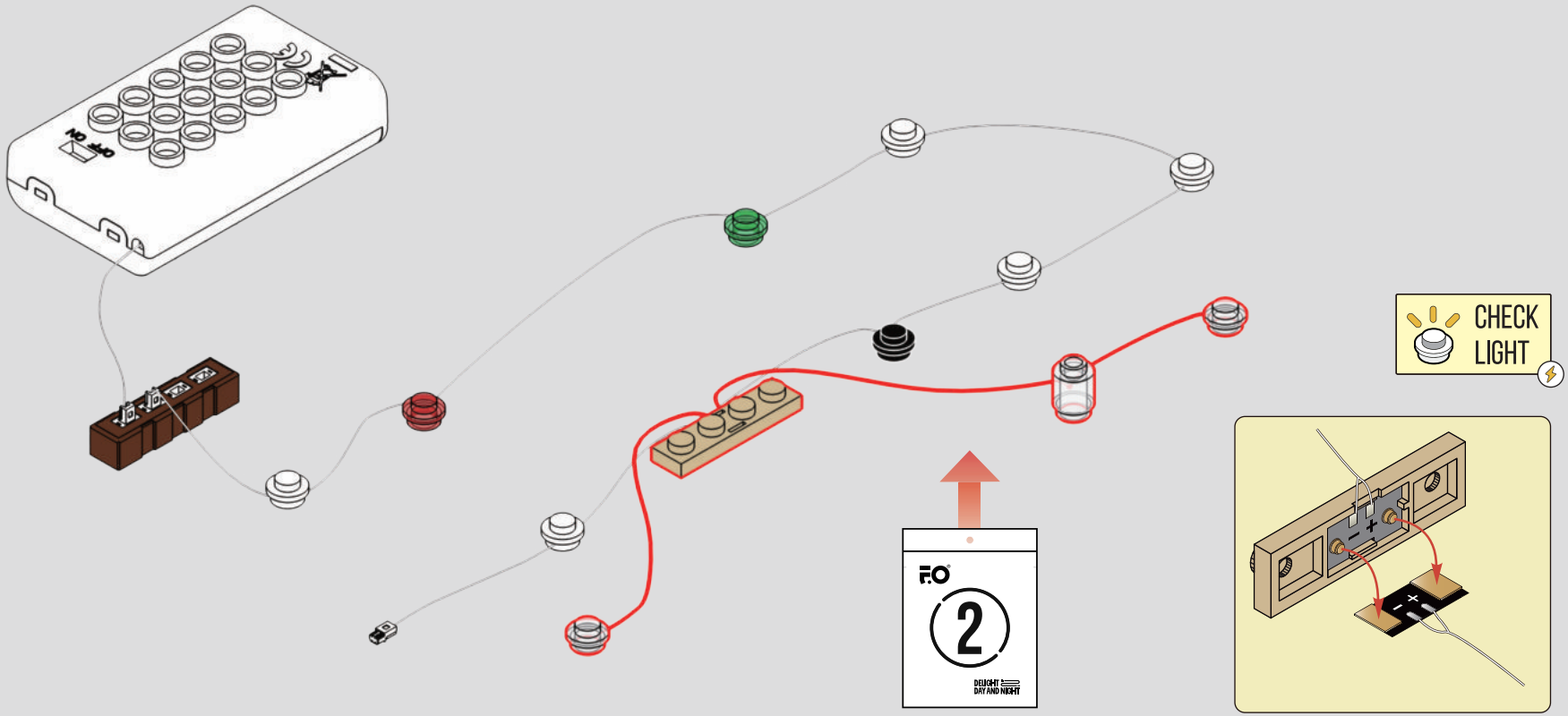



F-pack has two parts: minifigure bricks and special bricks.
Assemble minifigure bricks according to instructions on the right.
Keep special bricks for later assembly steps.

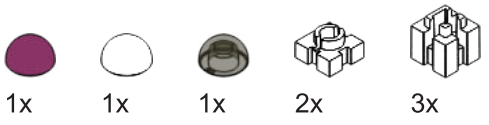

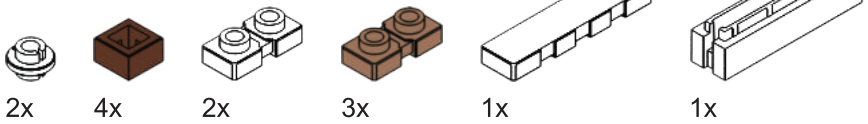



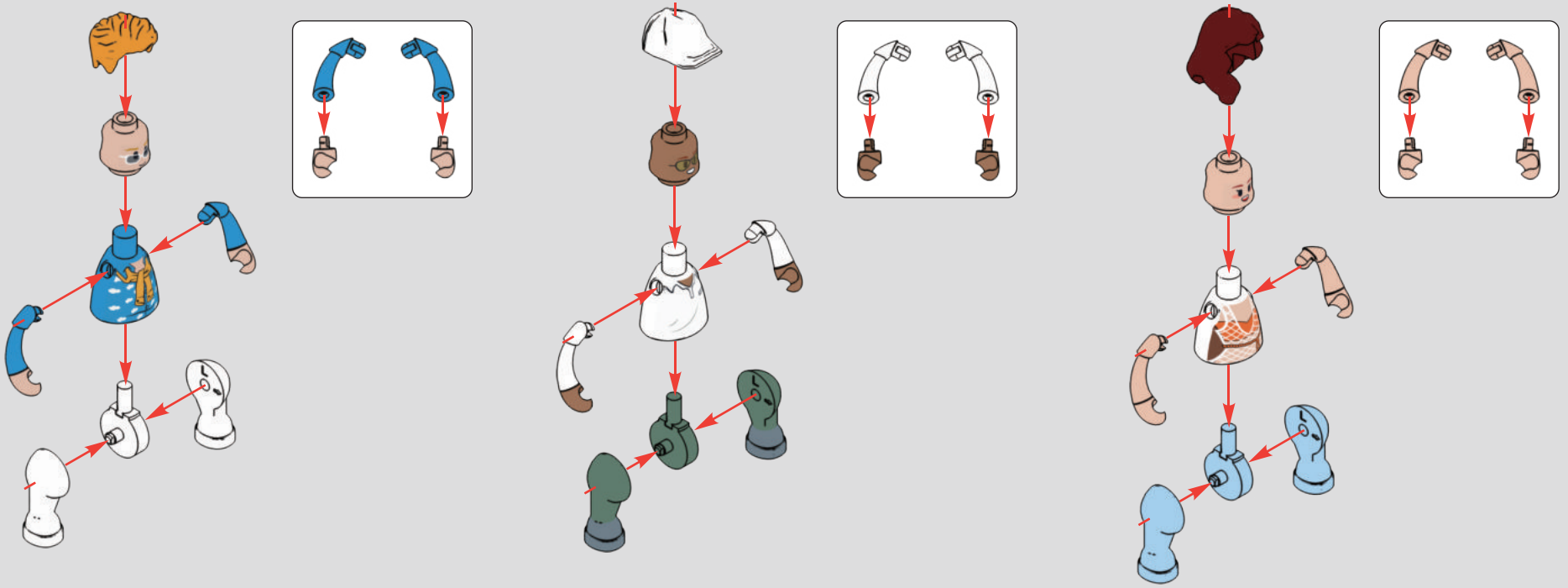

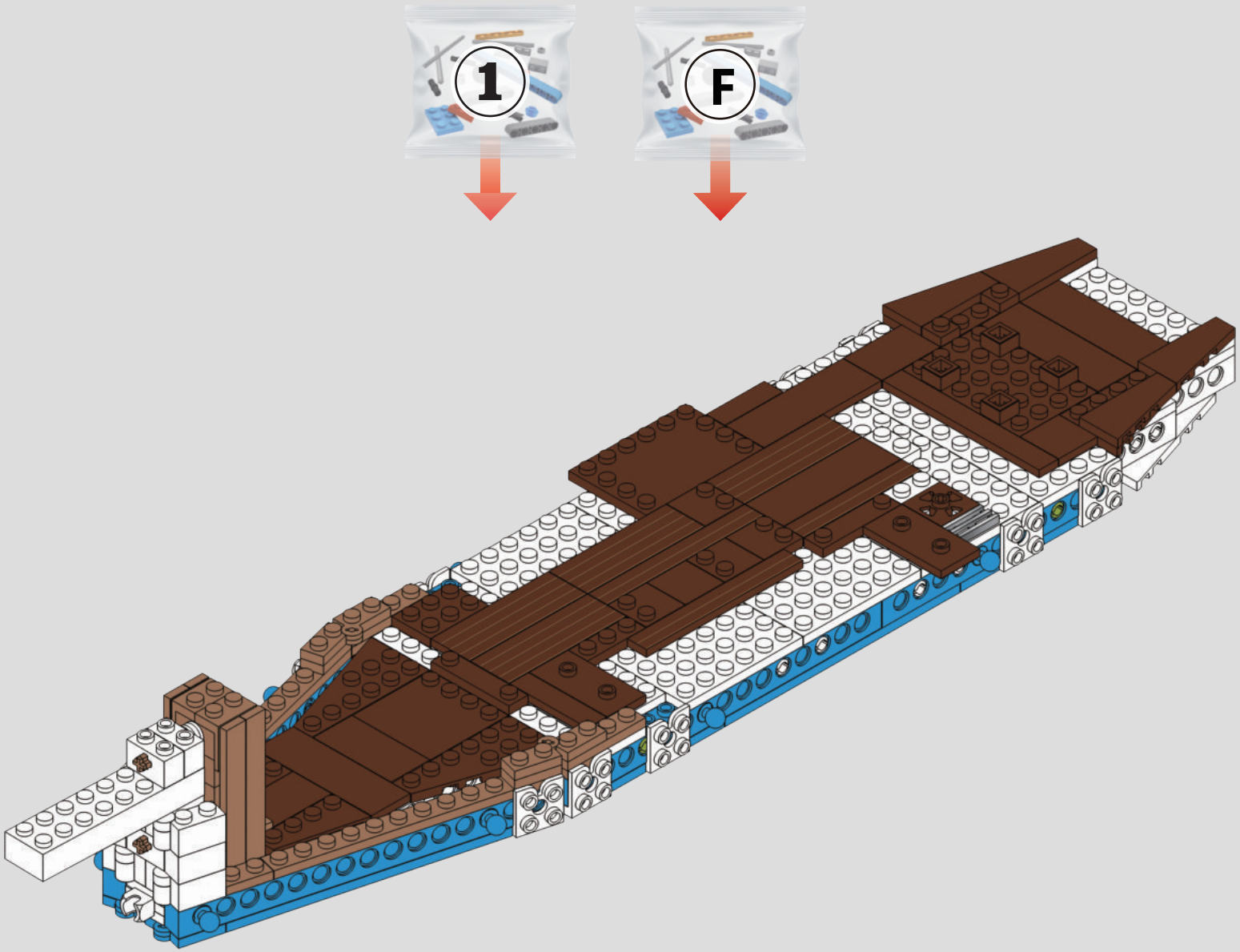
1
F

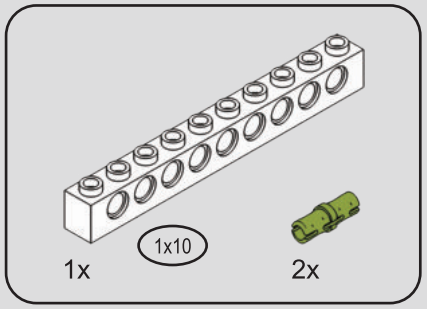

1

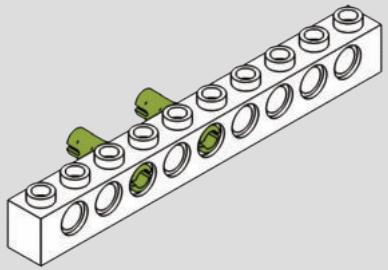

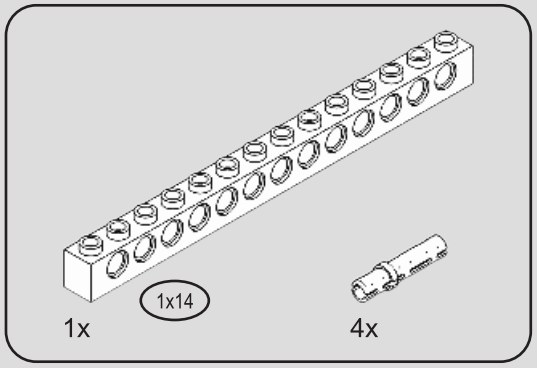

2

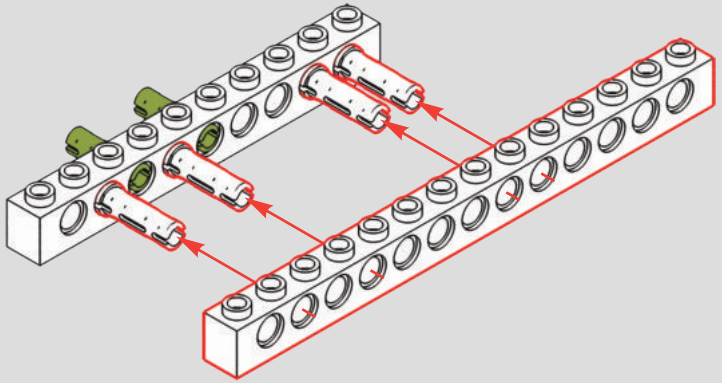

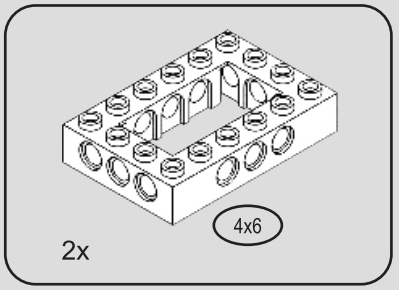

3

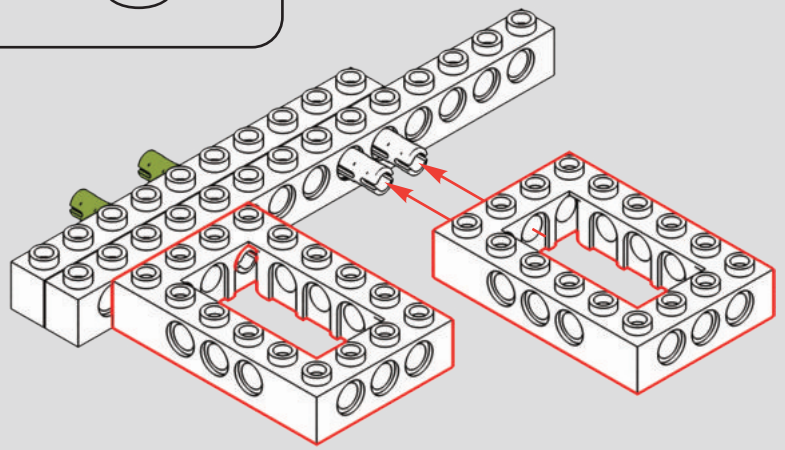

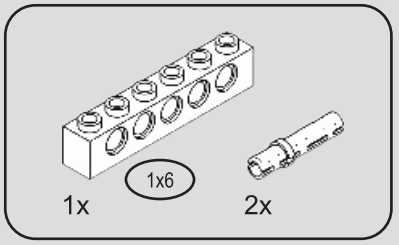

4

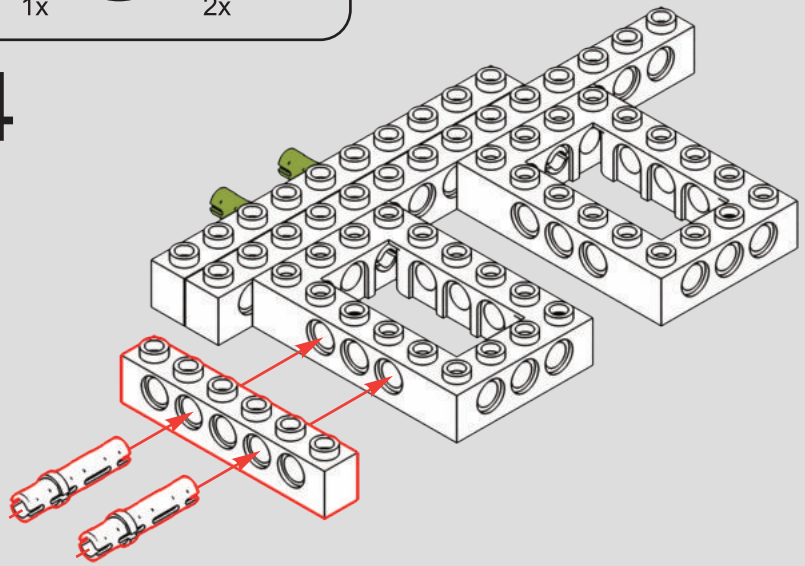

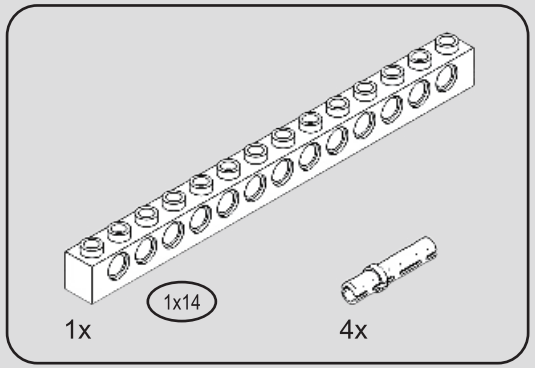

5

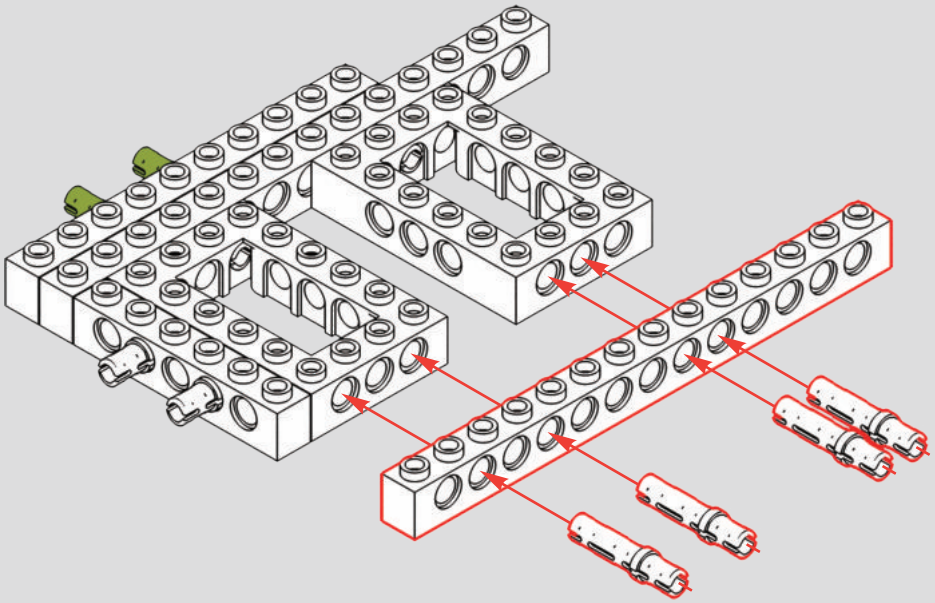

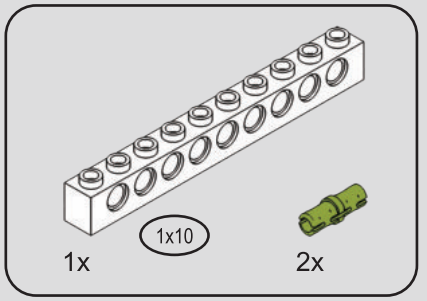

6

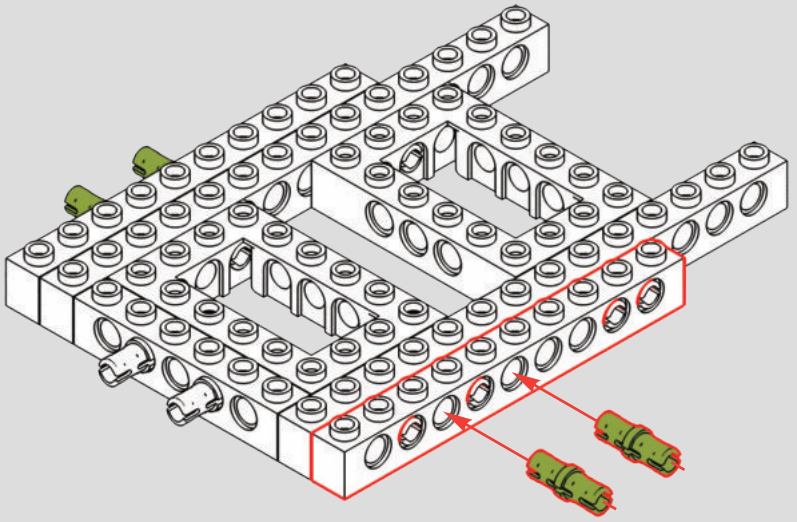

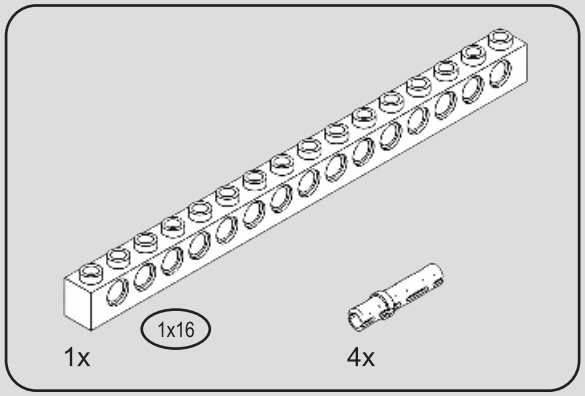

7

1

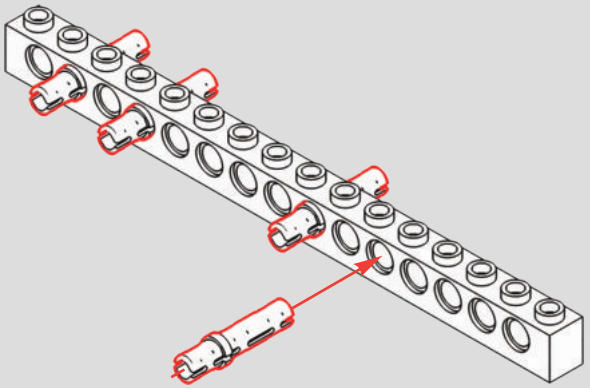

2

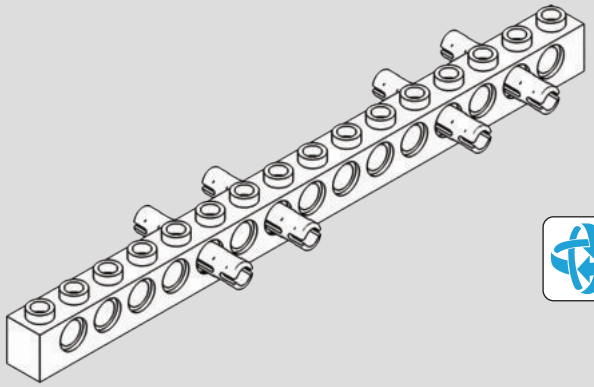

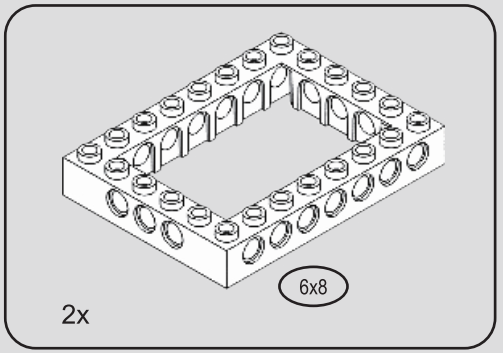

8

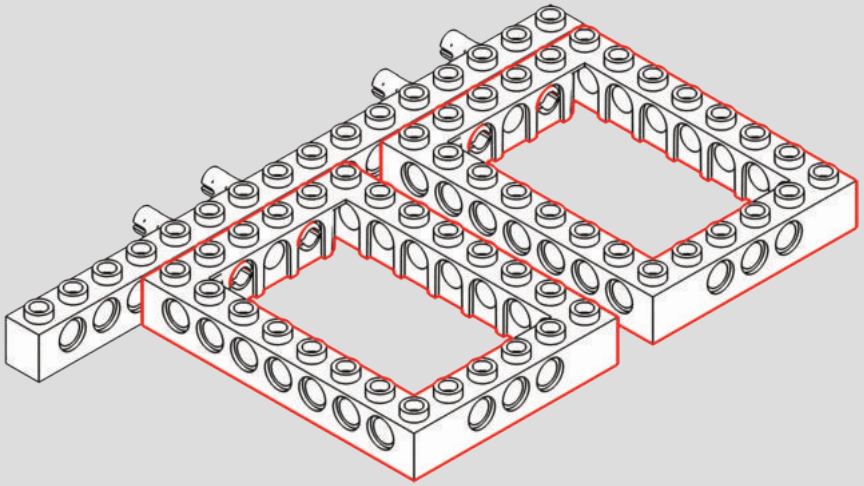

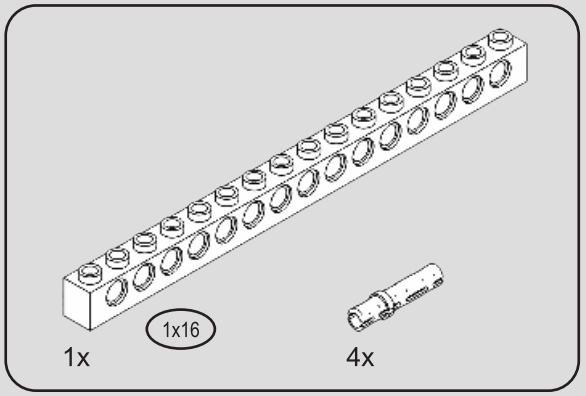

9

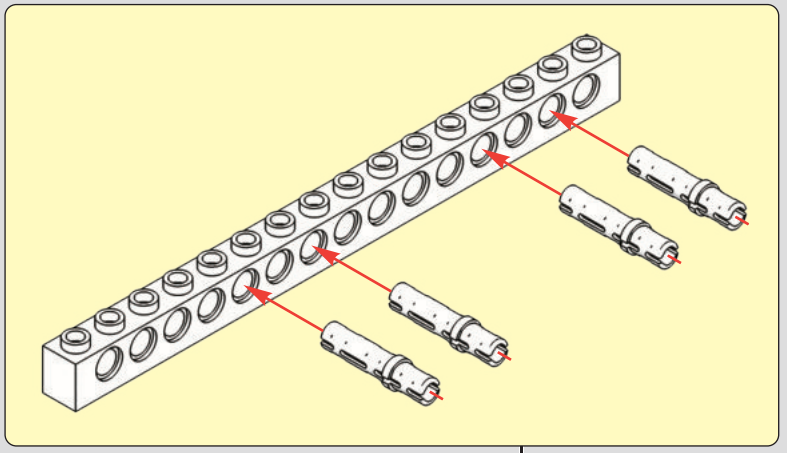

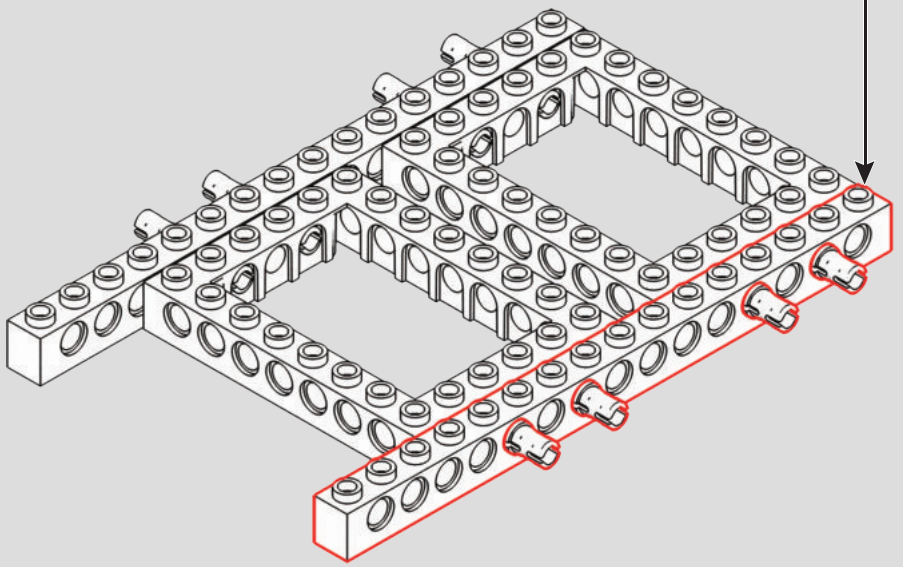

10

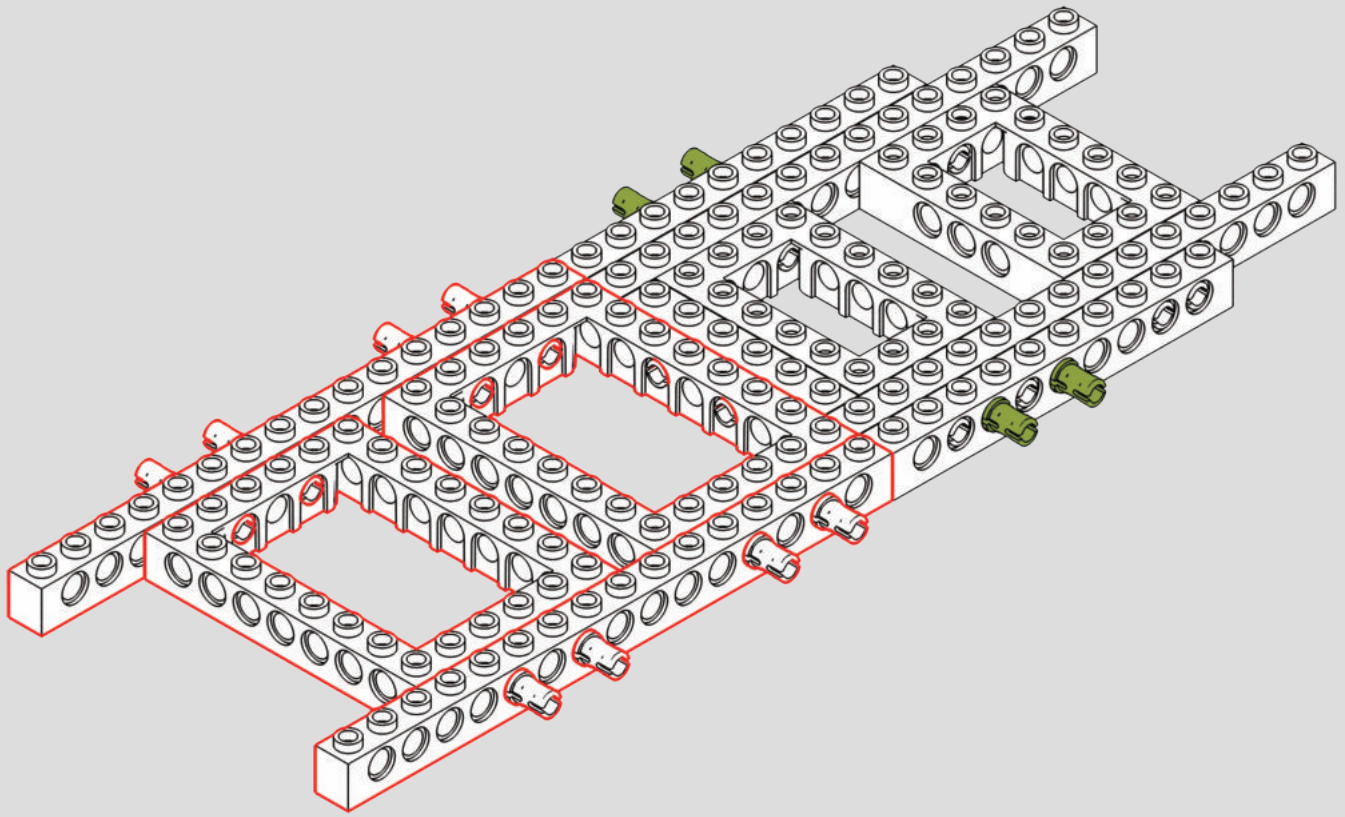

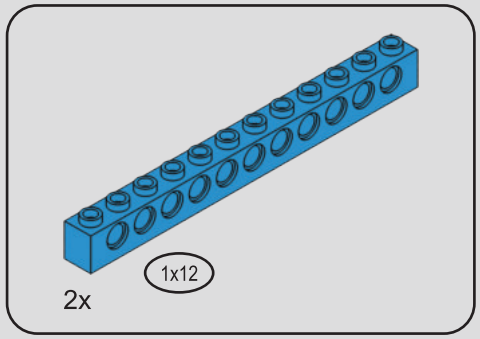

11

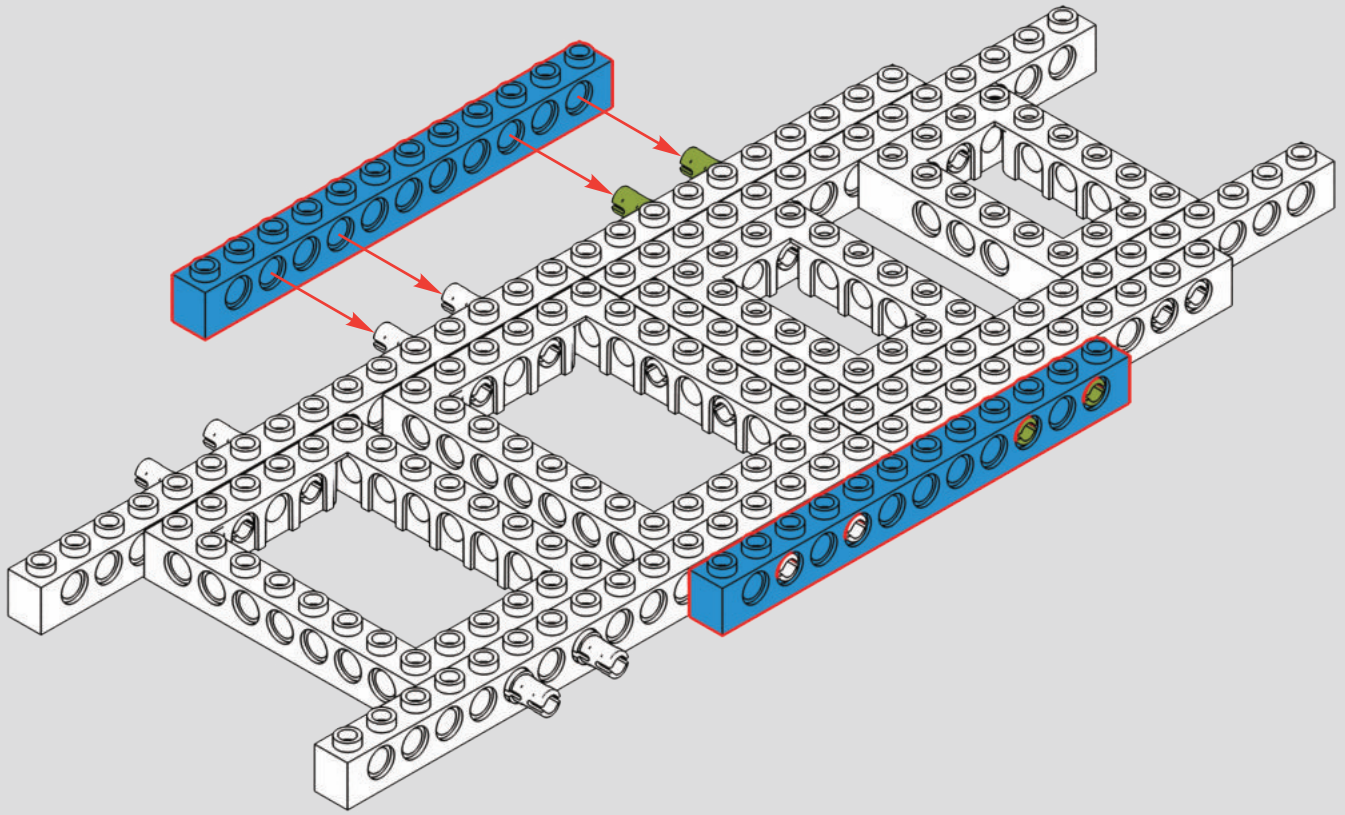

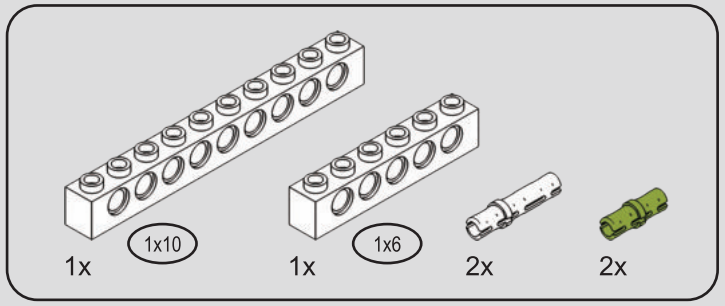

12

1

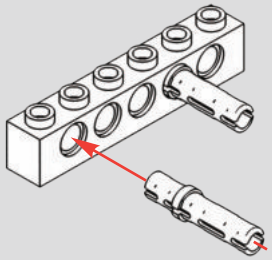

2

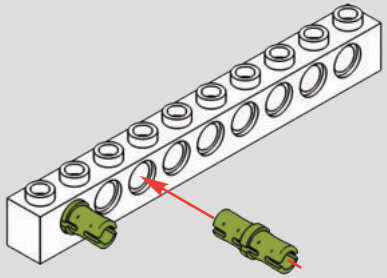

3

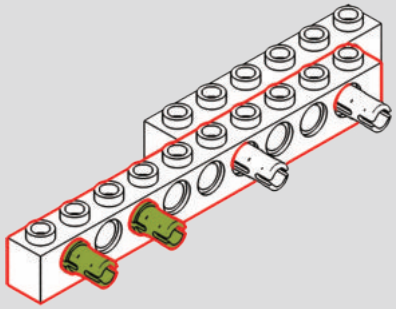

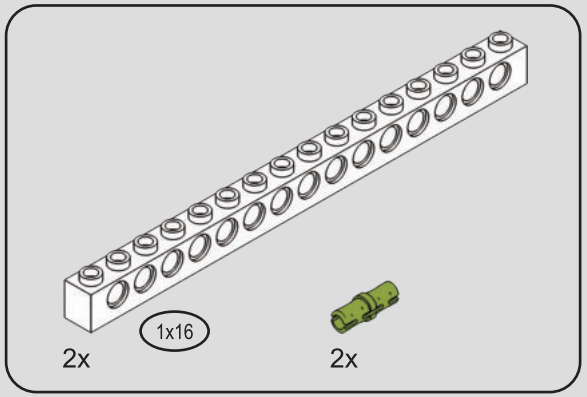

13

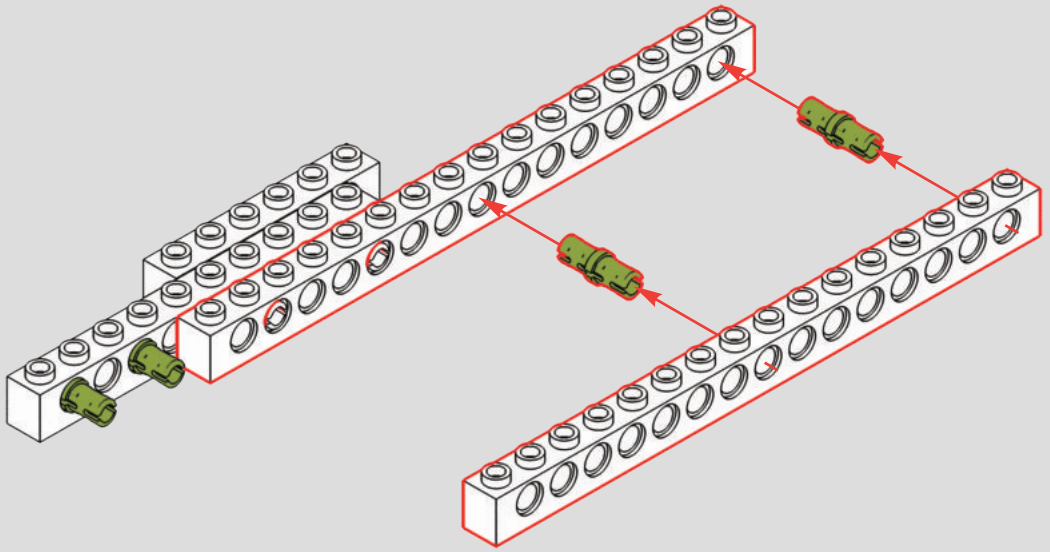

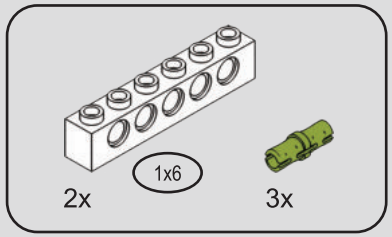

14

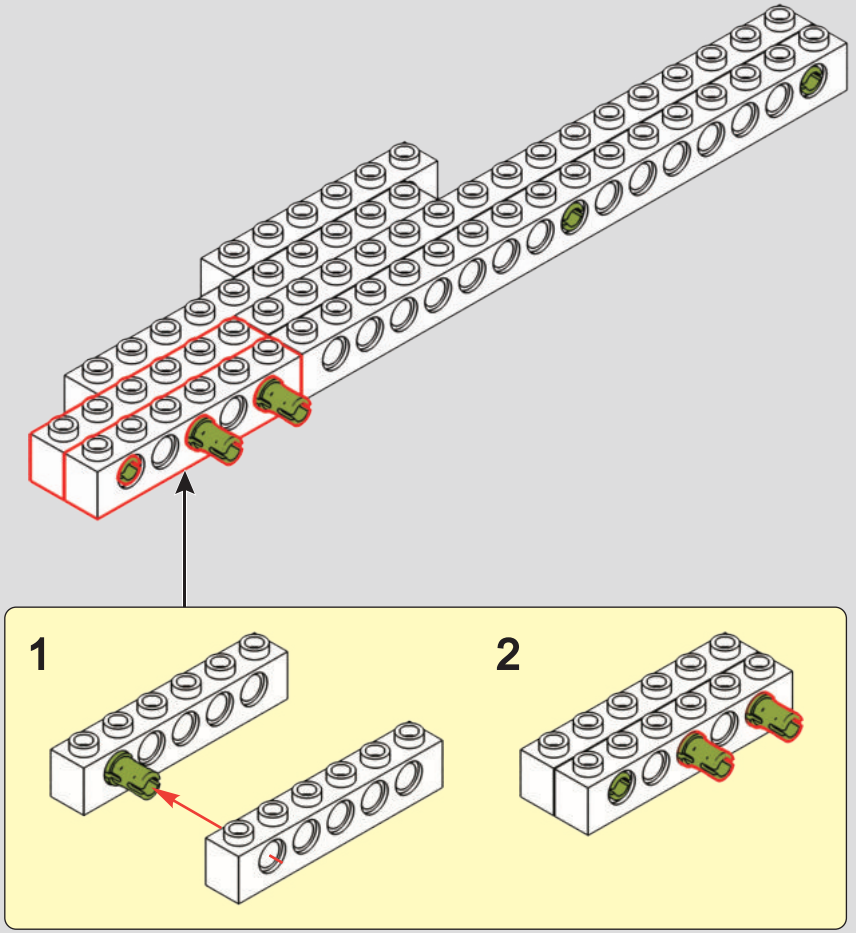

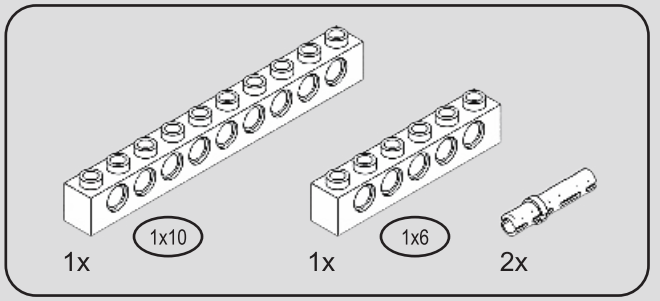

15

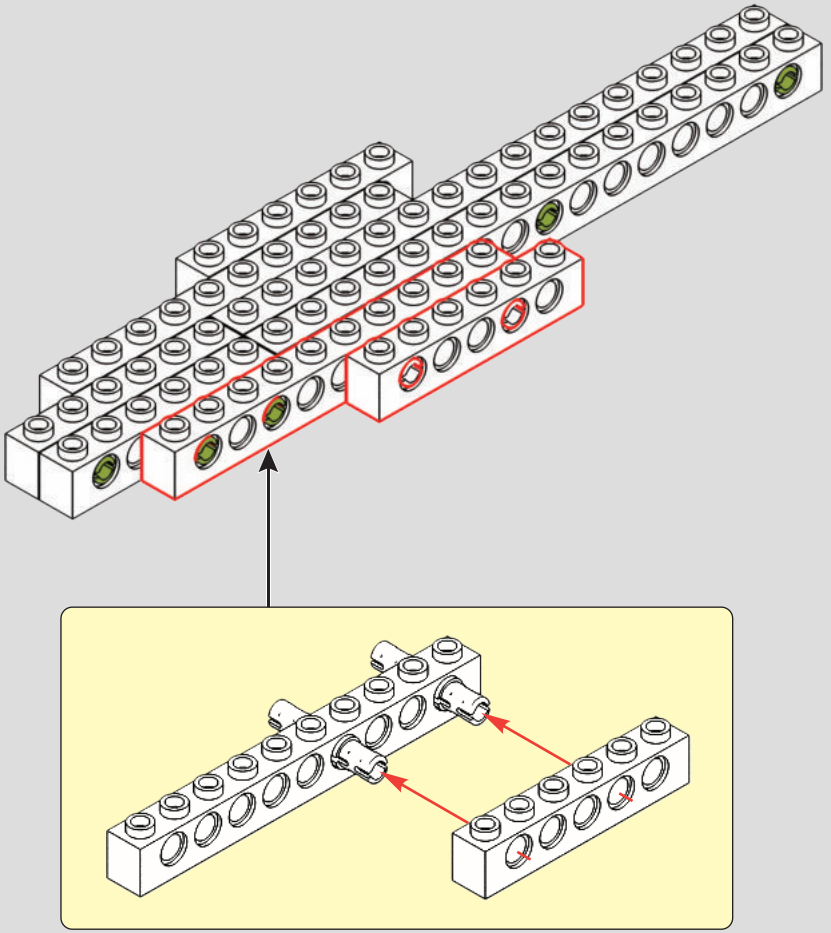

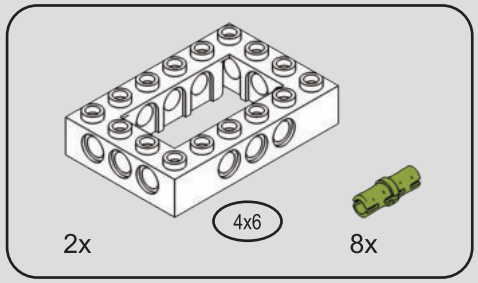

16

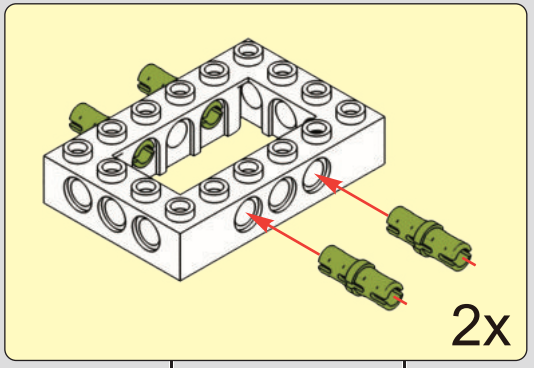

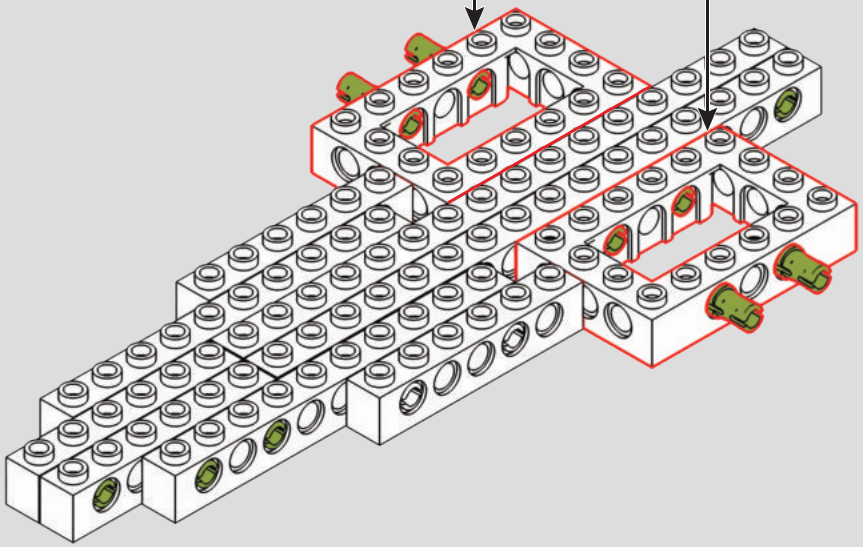

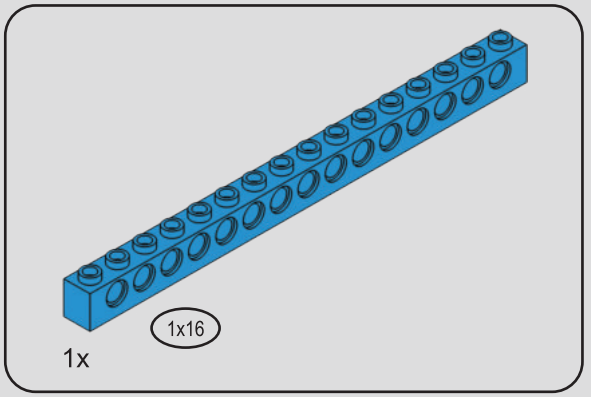

17

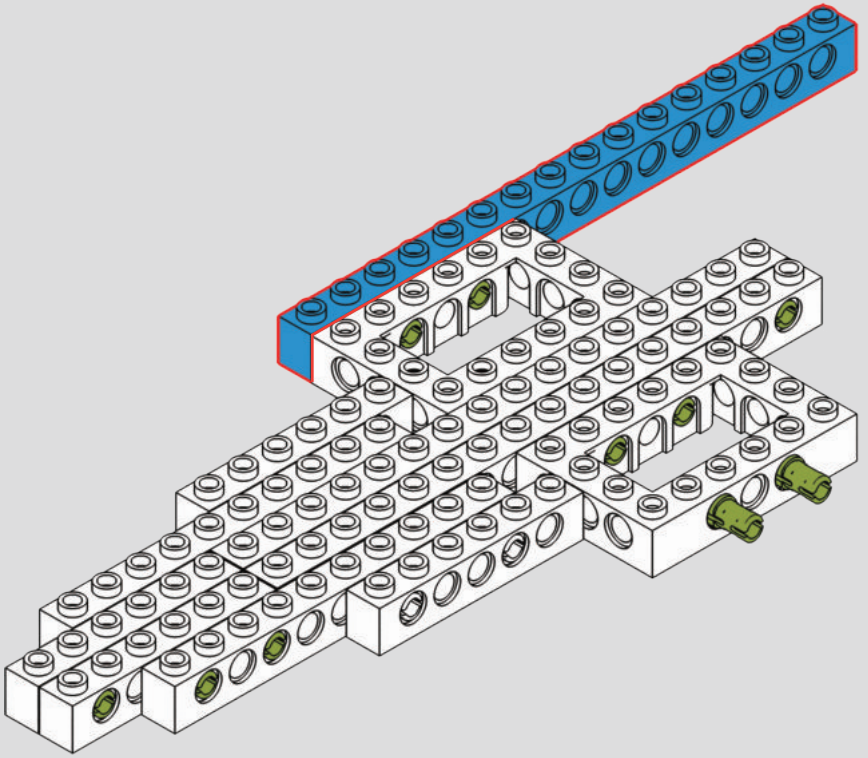

18

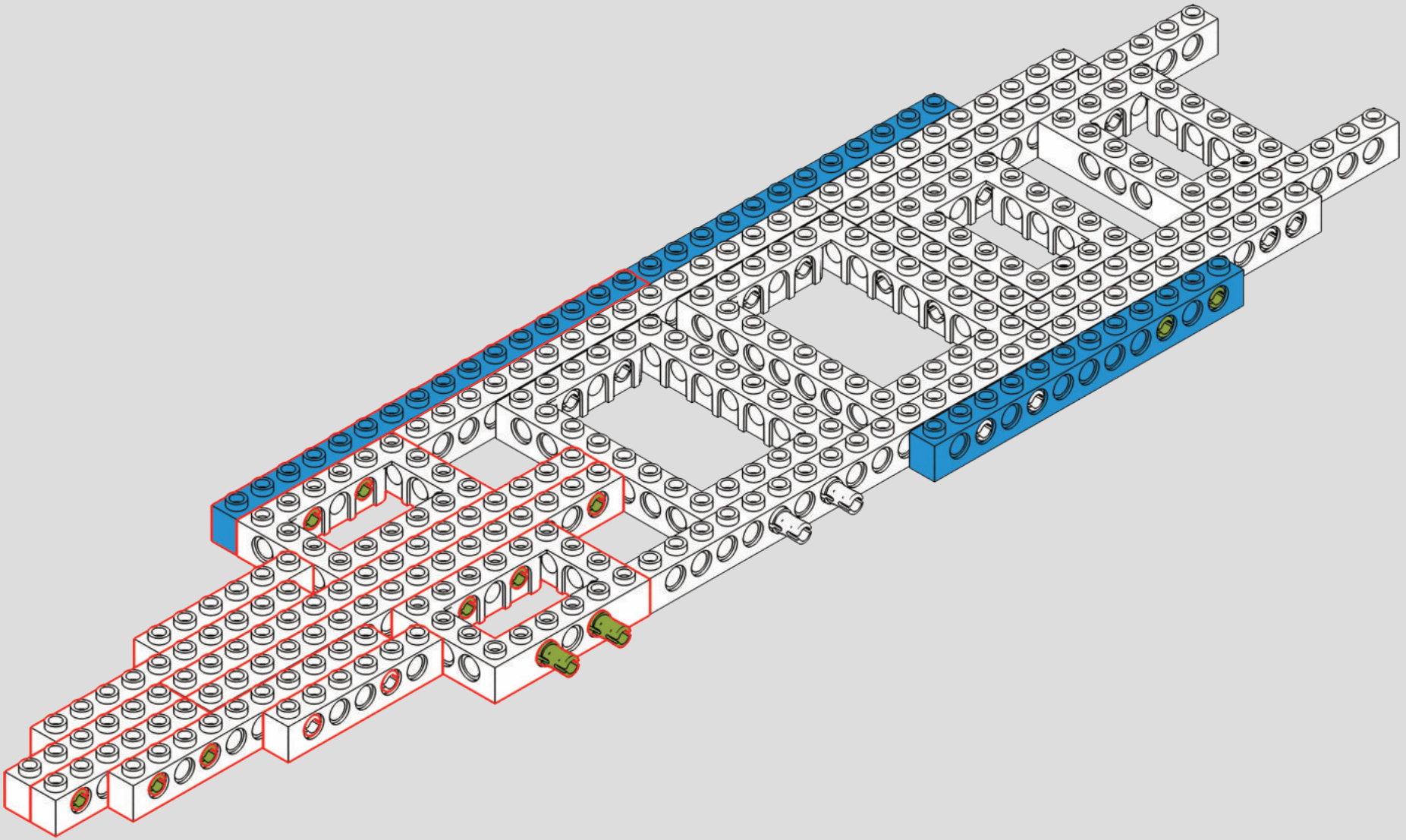

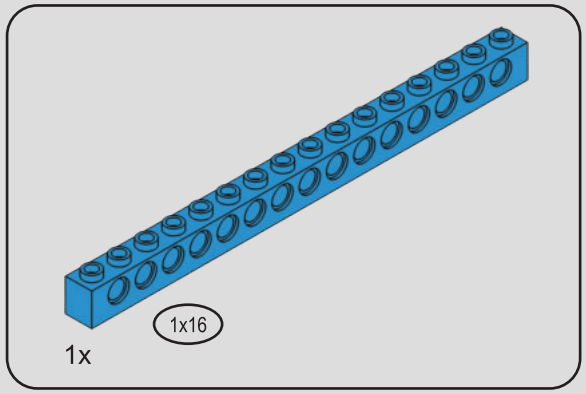

19

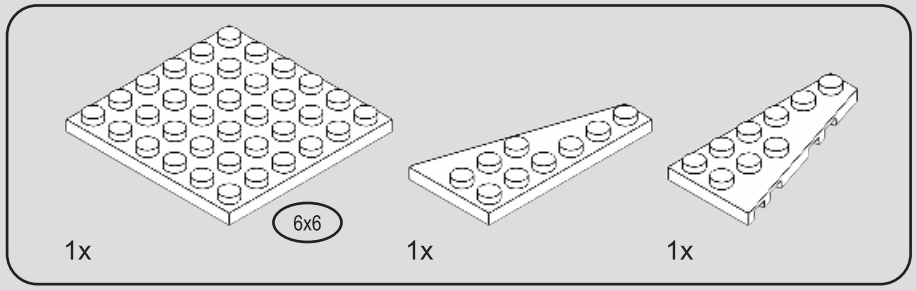

20

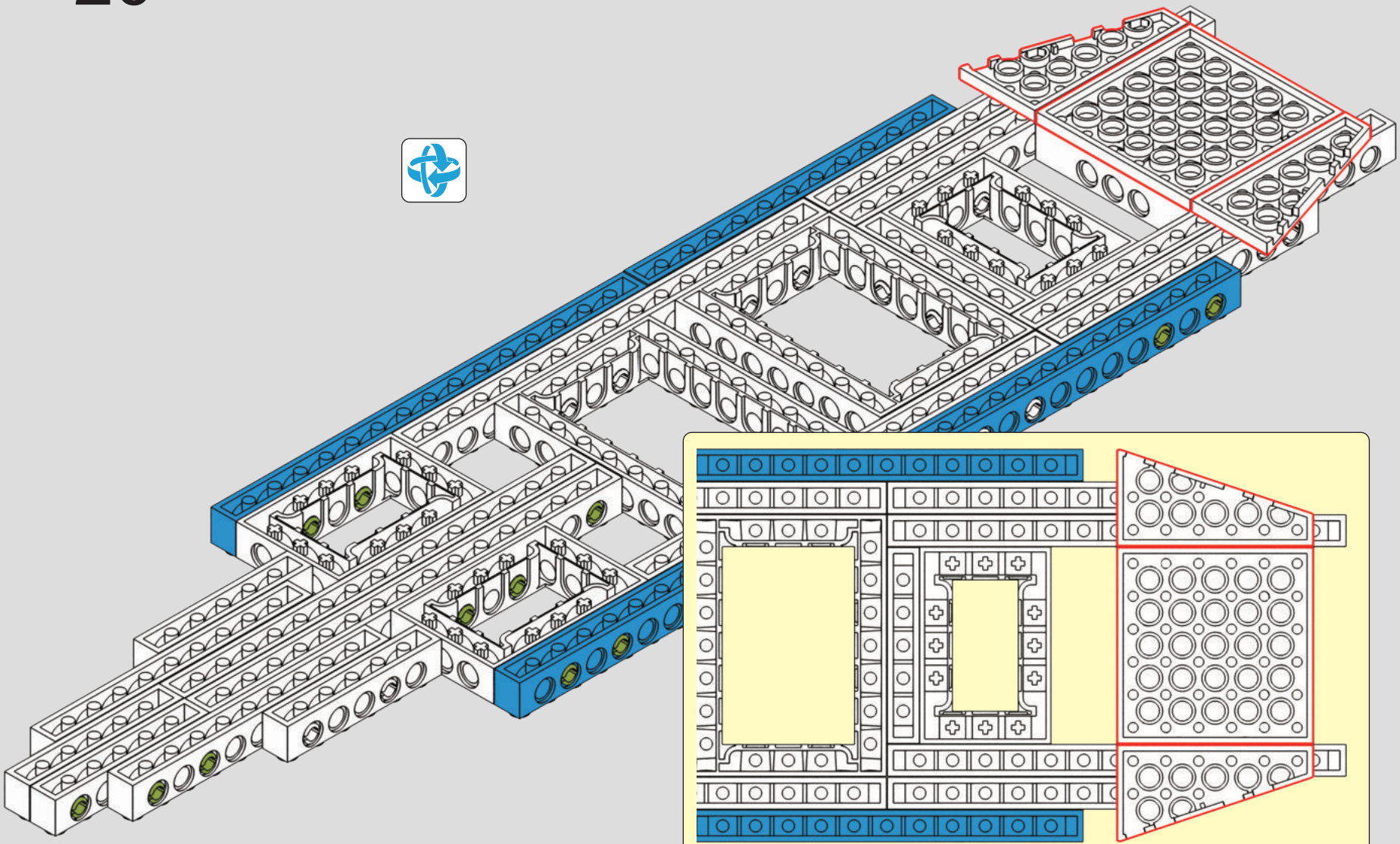

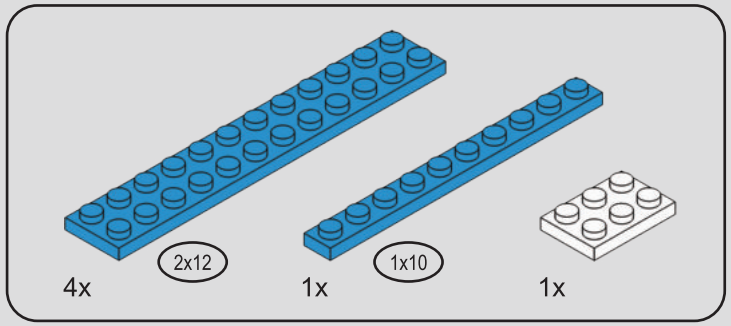

21

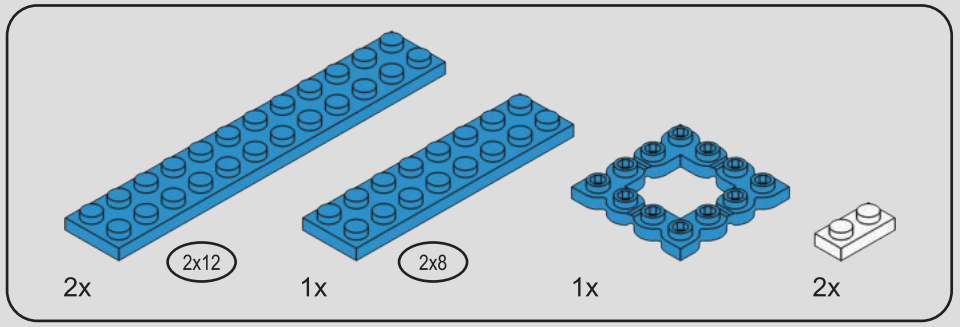

22

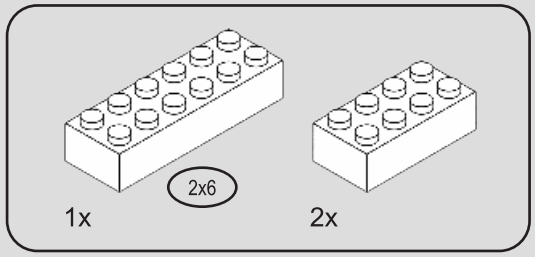

23

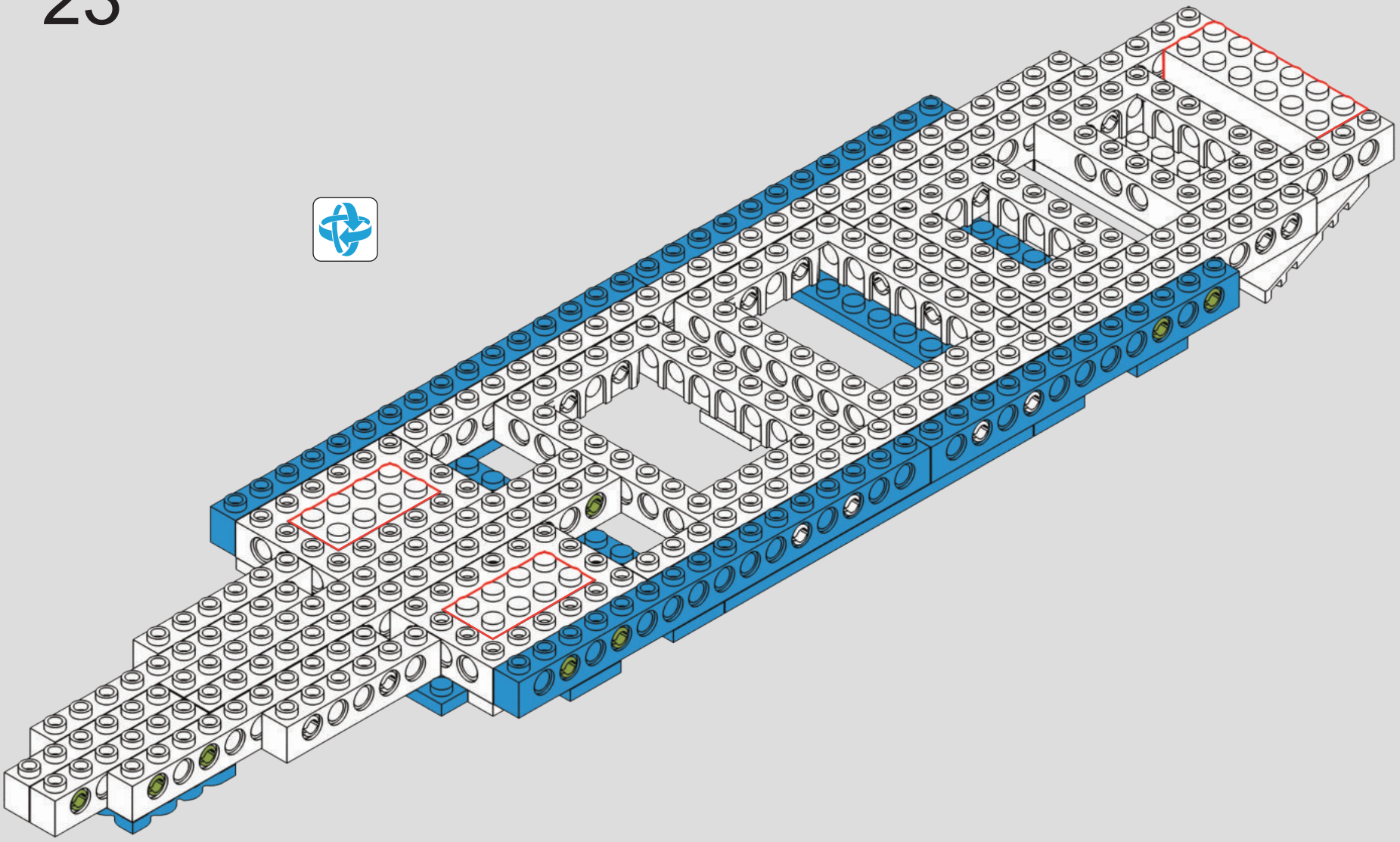

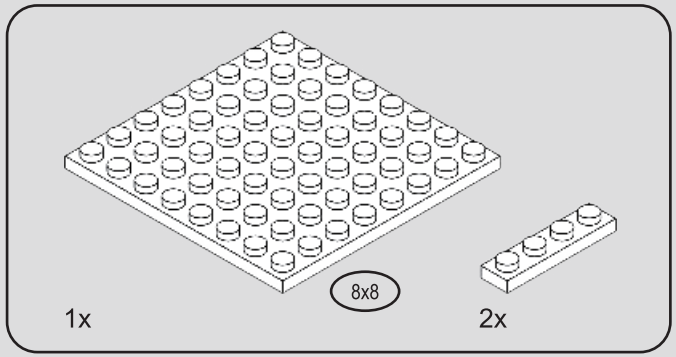

24

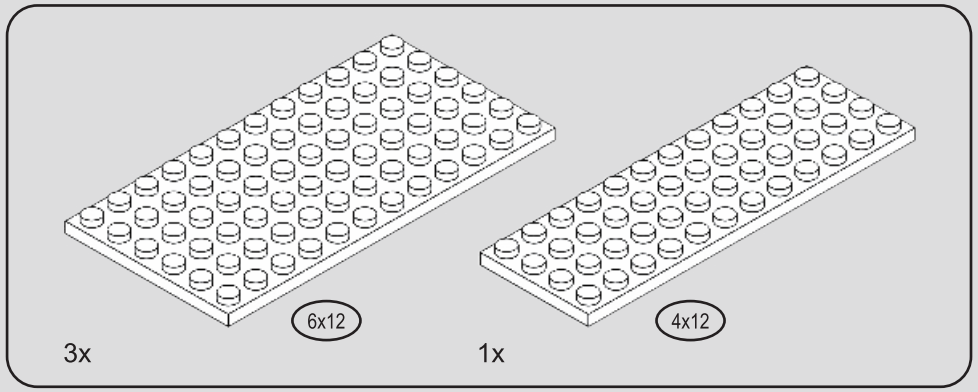

25

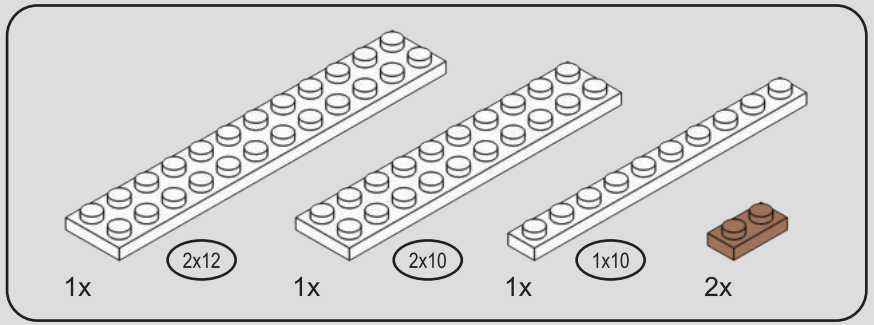

26

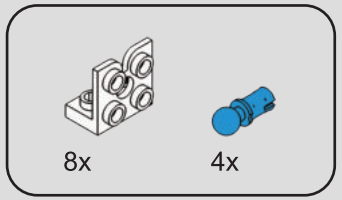

27

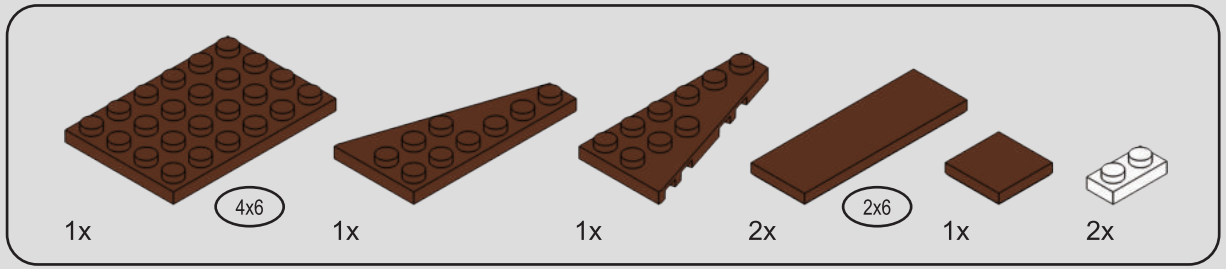

28

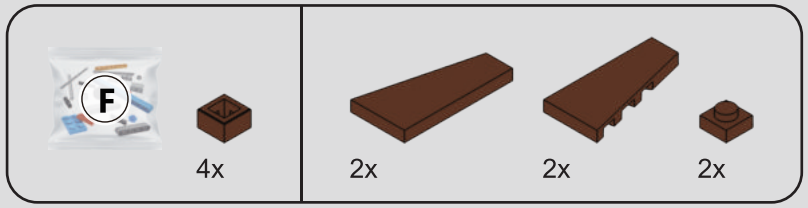

29

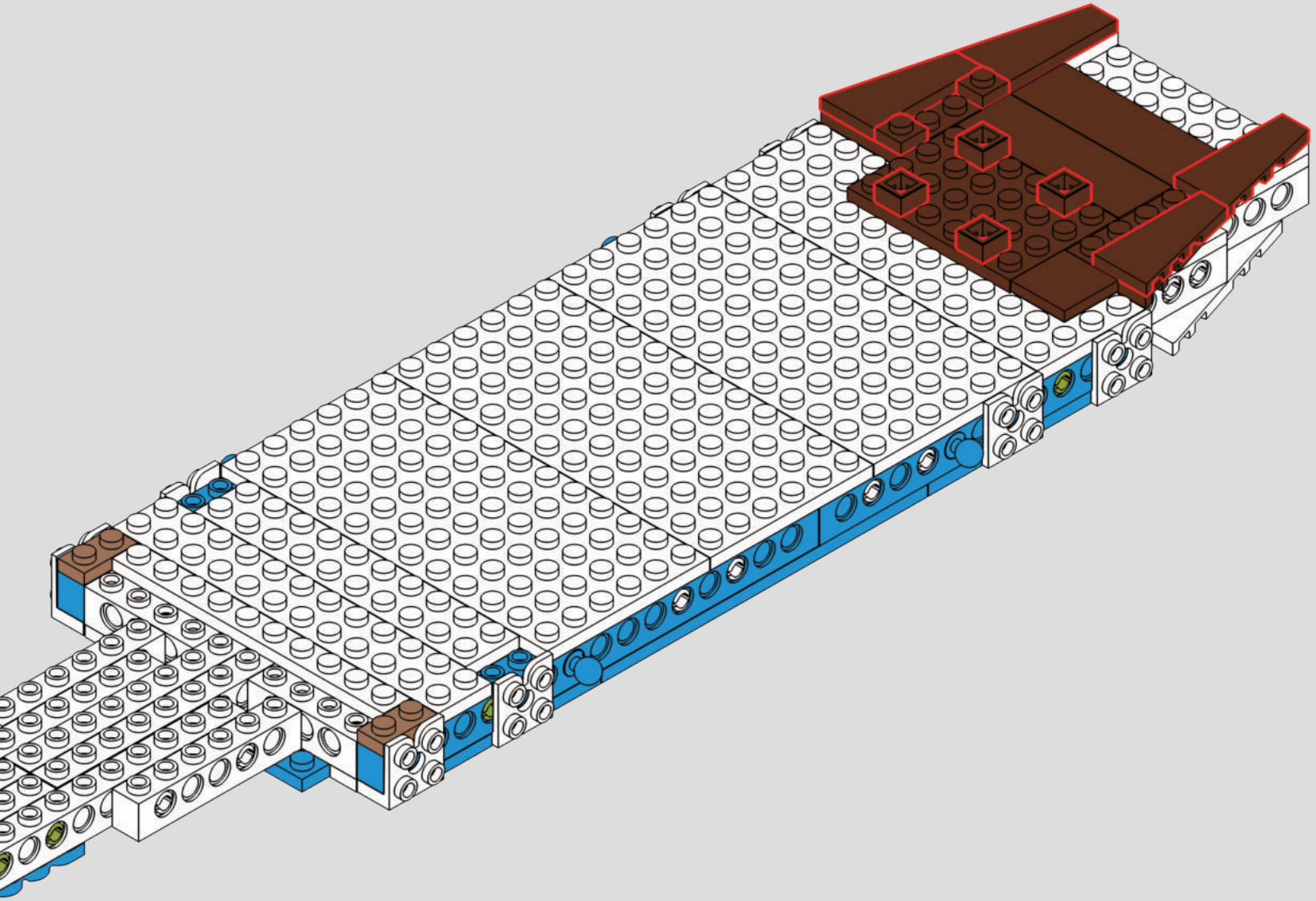

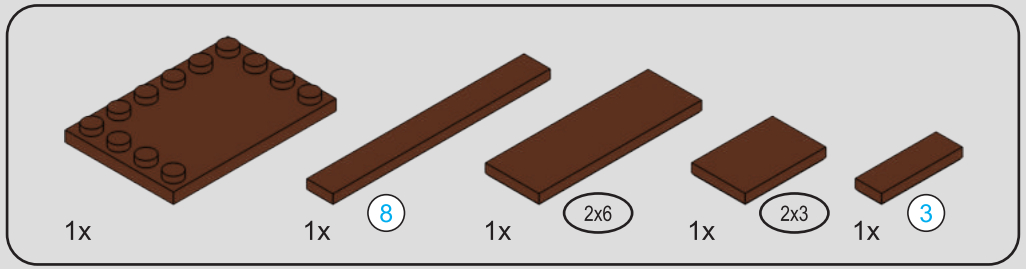



30

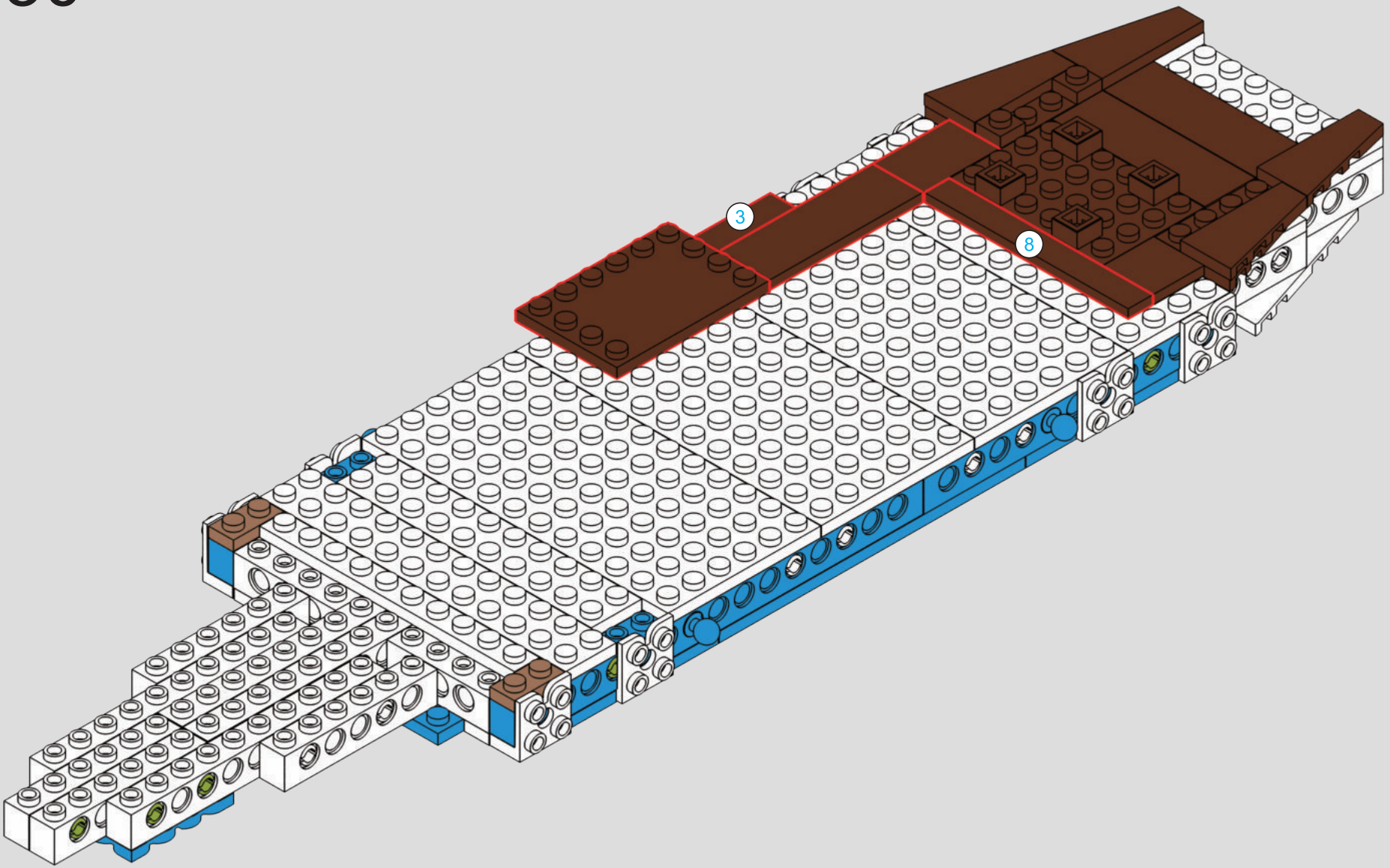

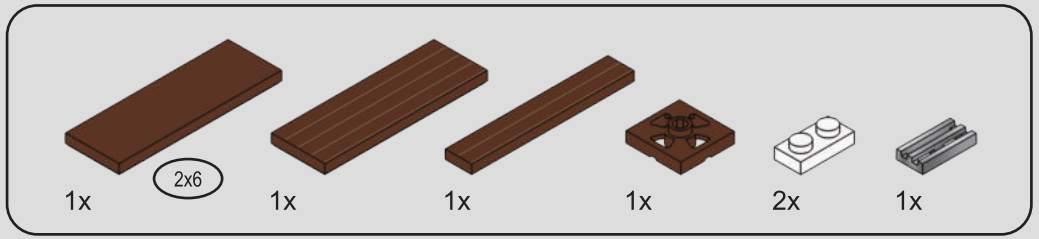

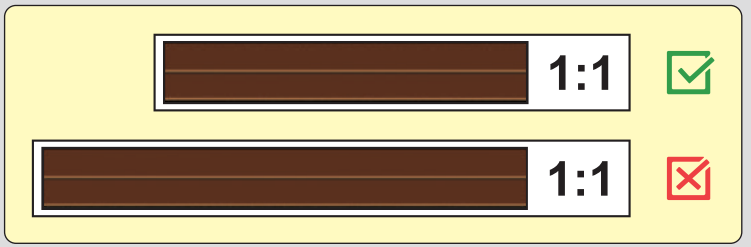

31

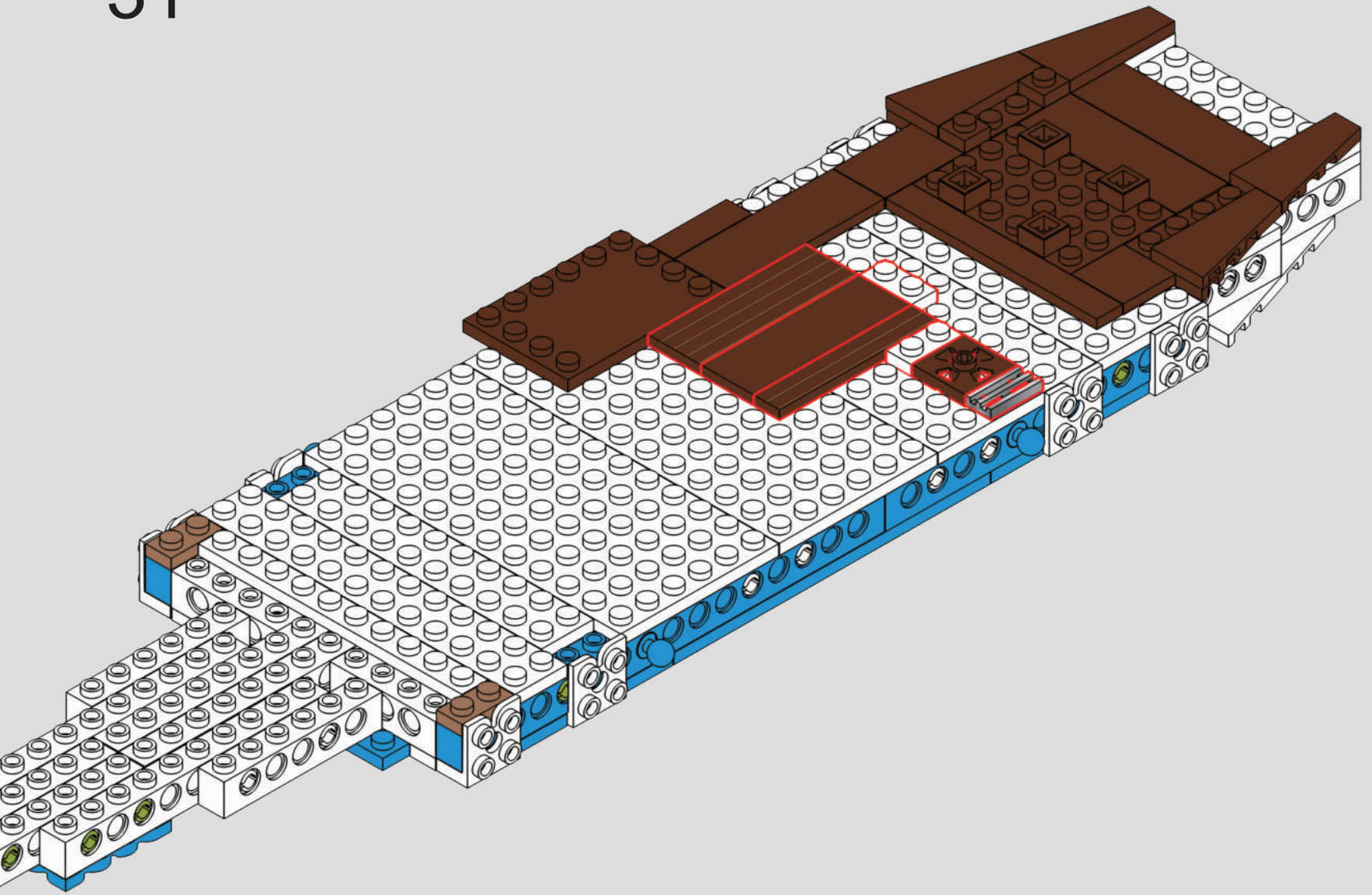

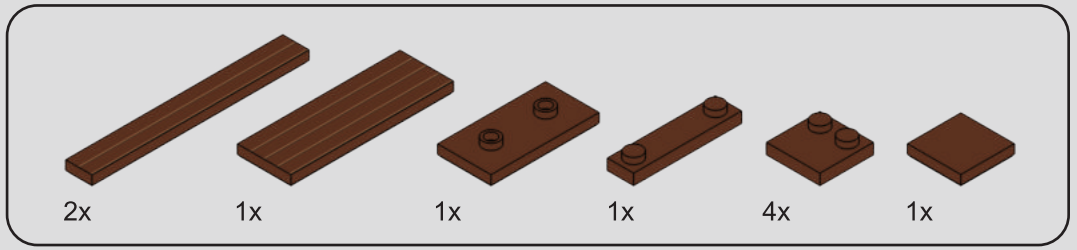

32

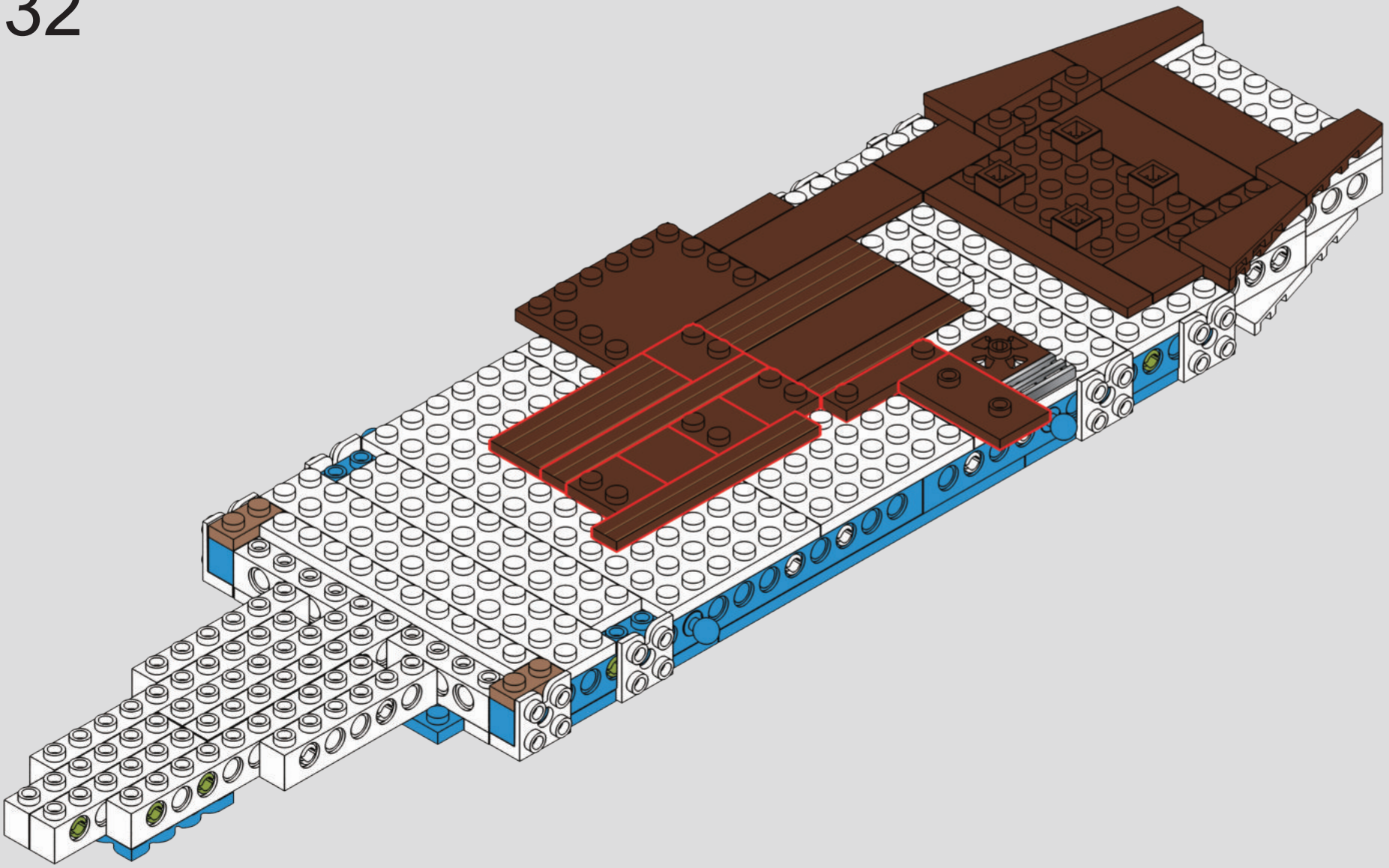

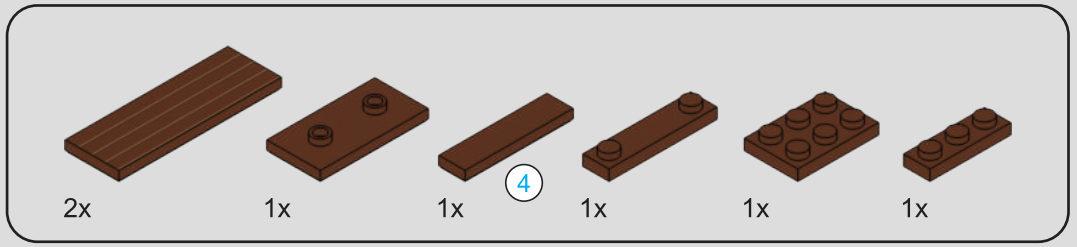



33

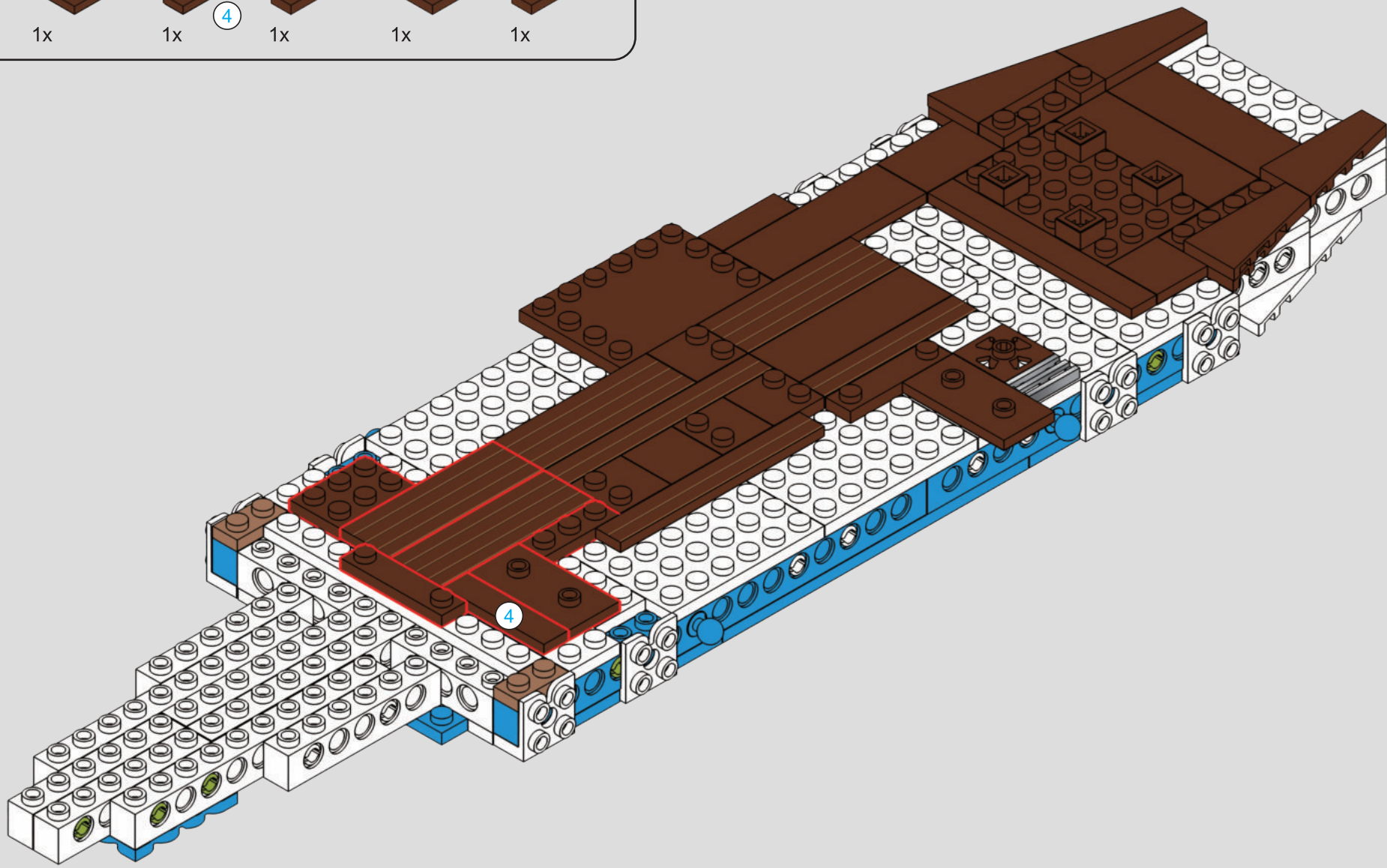

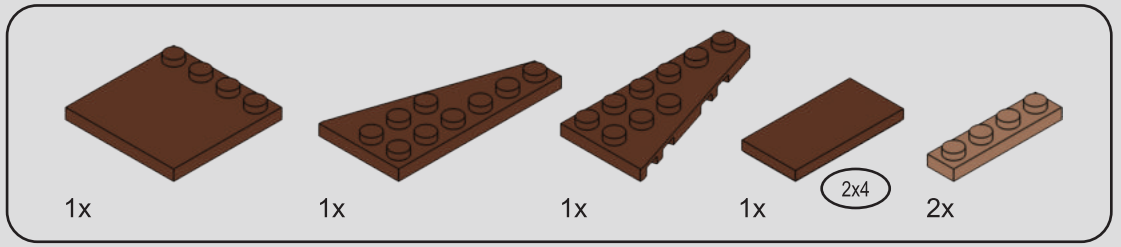

34

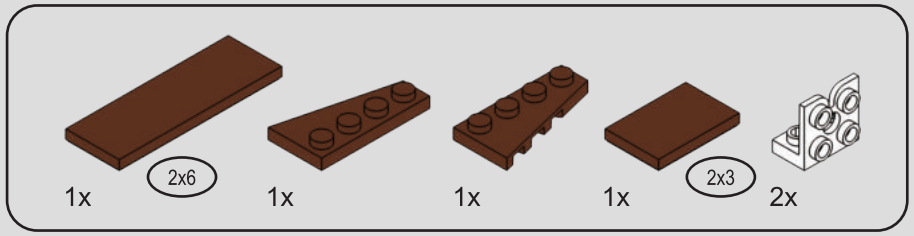

35

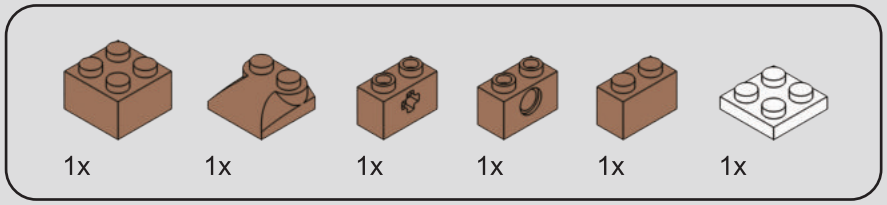

36

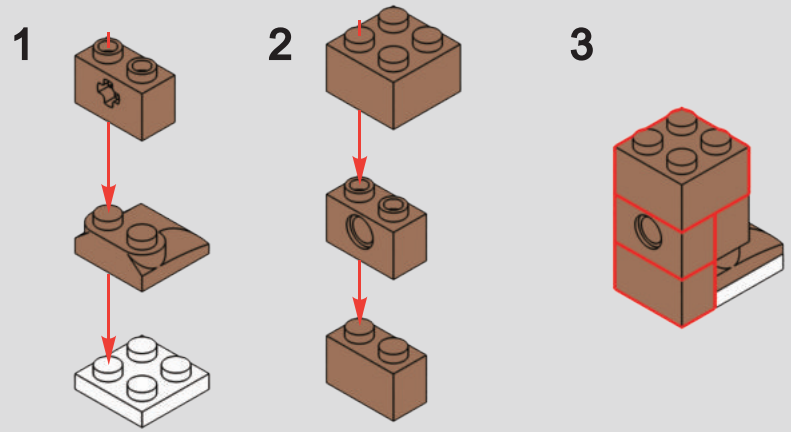

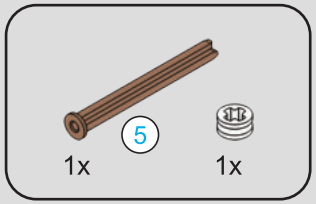



37

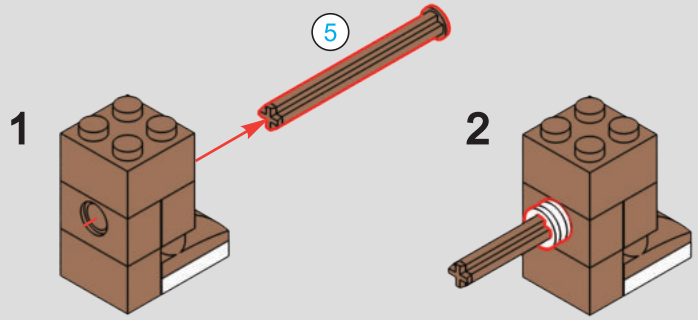

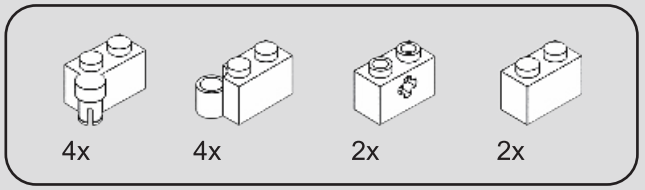

38

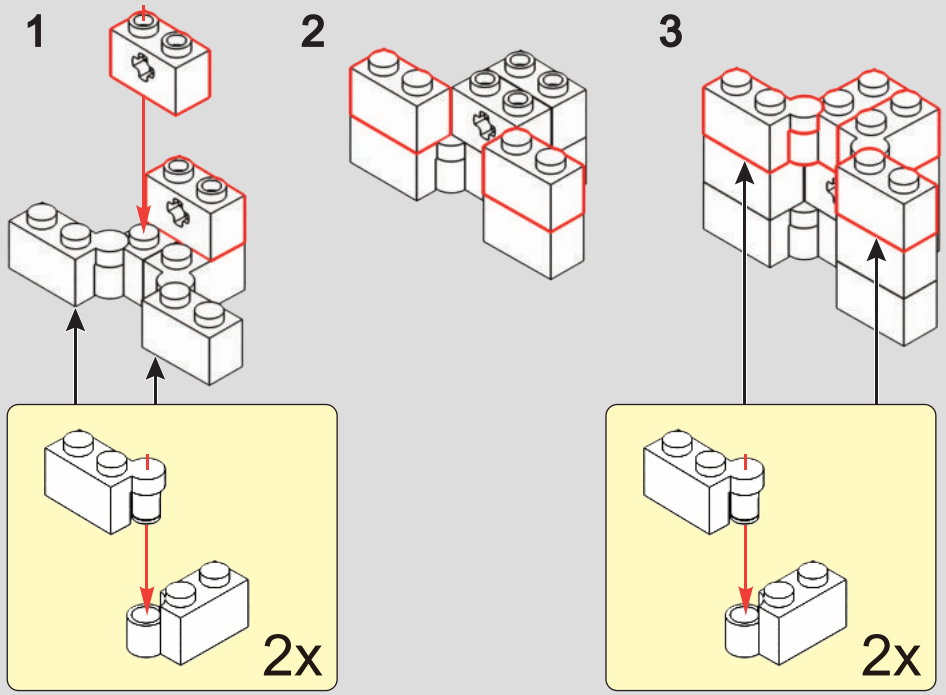

39

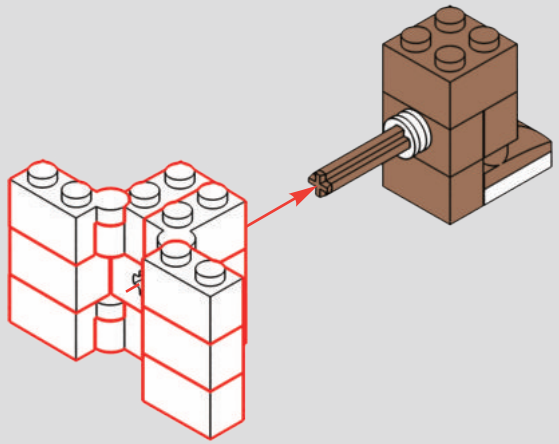

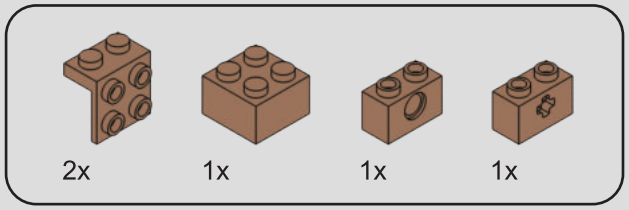

40

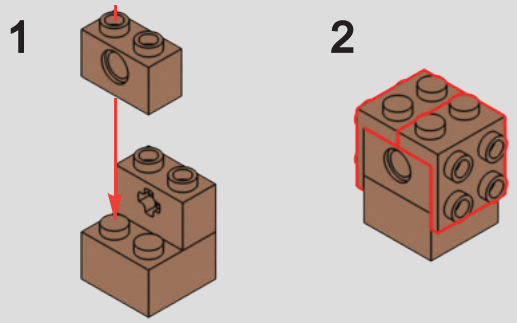

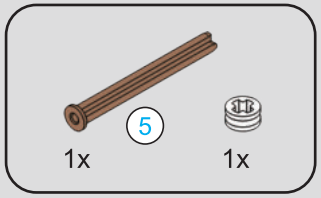



41

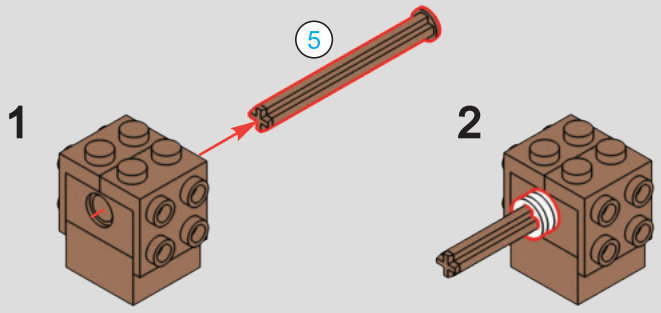

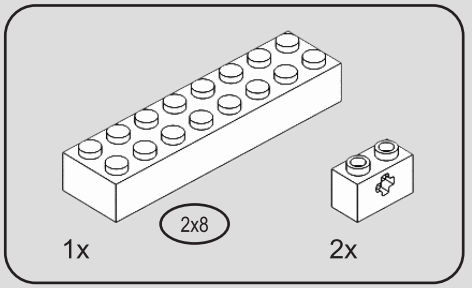

42

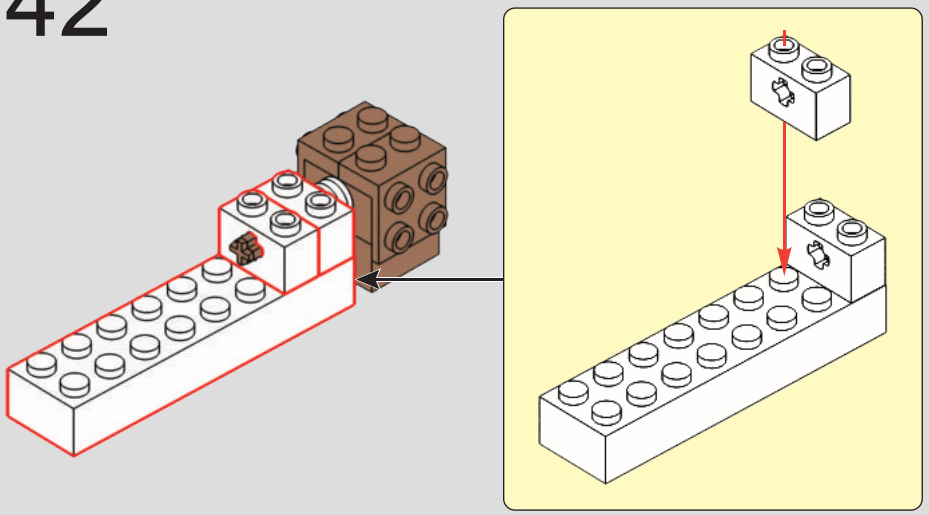

43

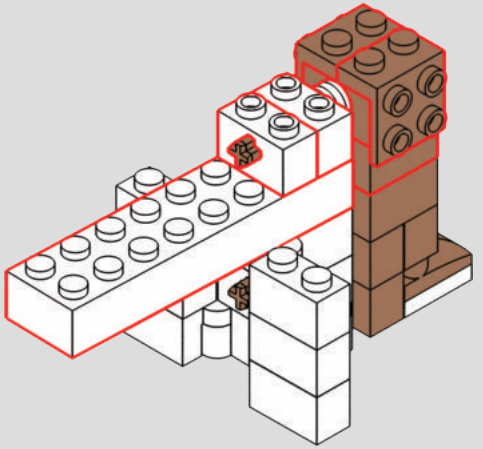

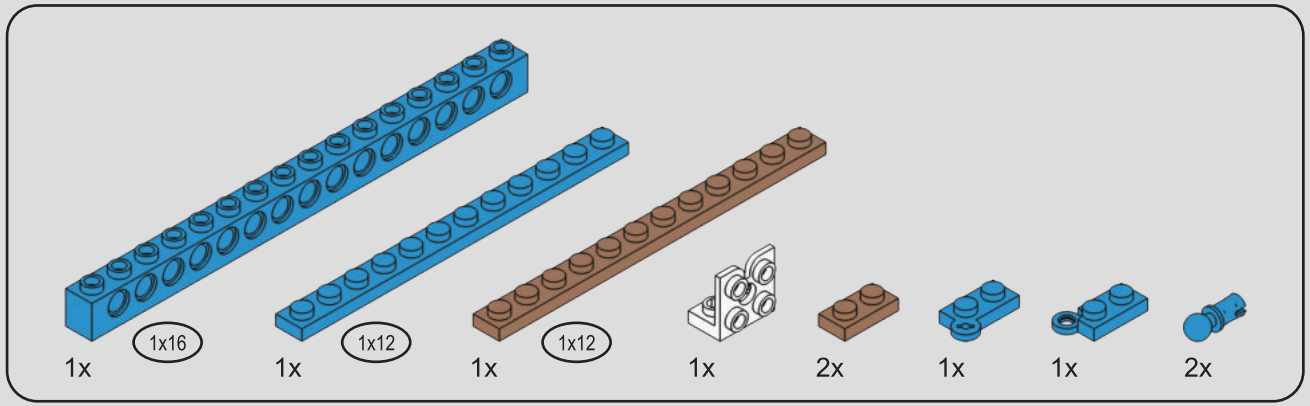

44

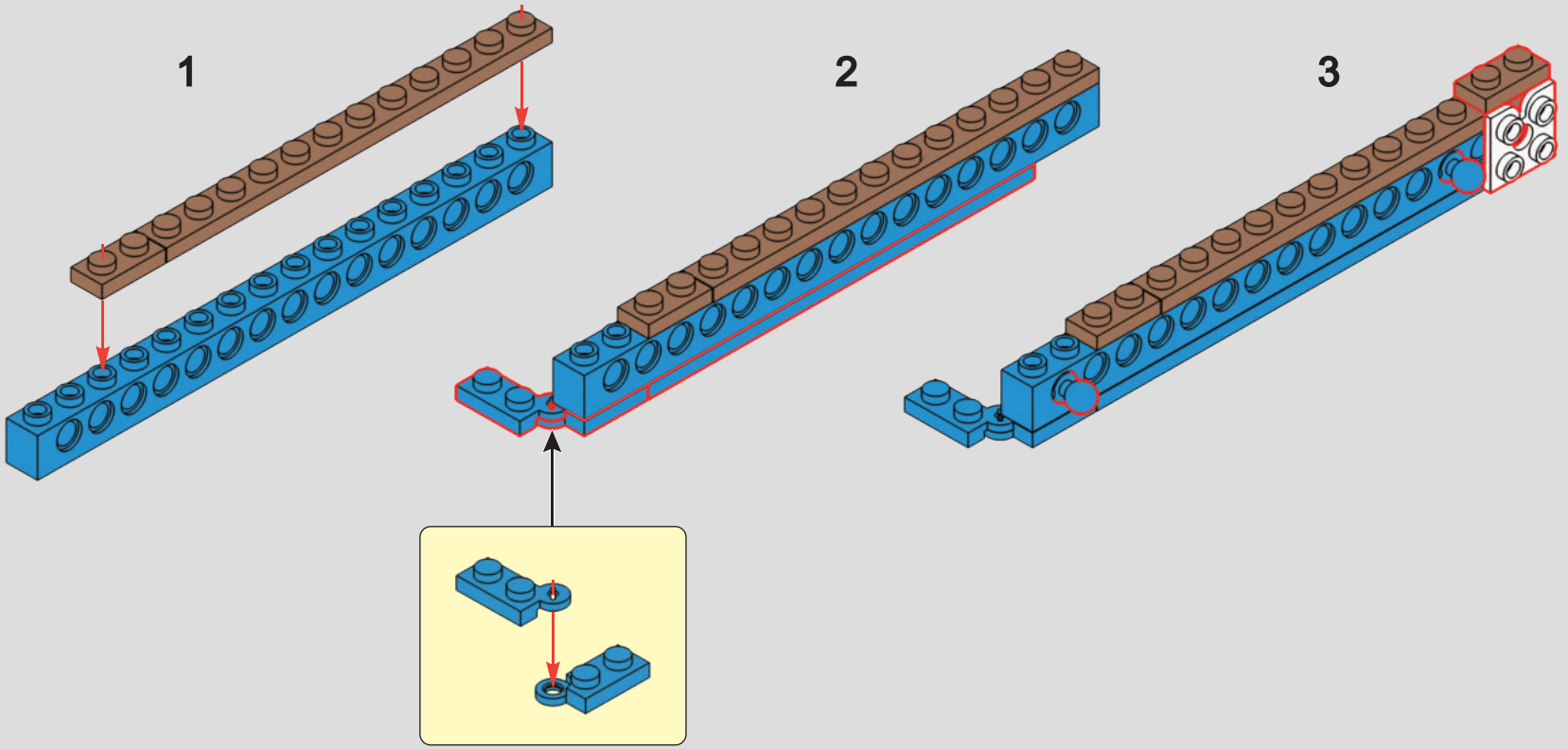

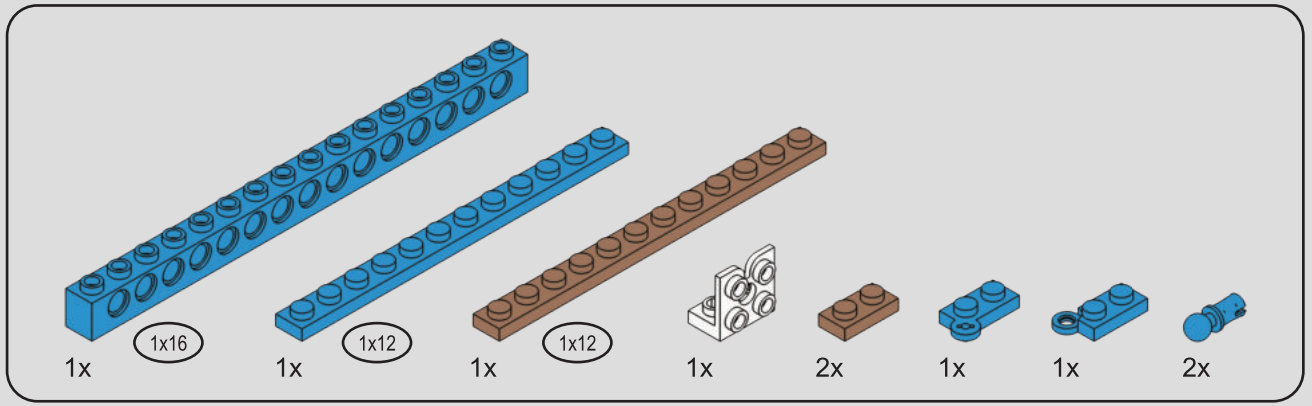

45

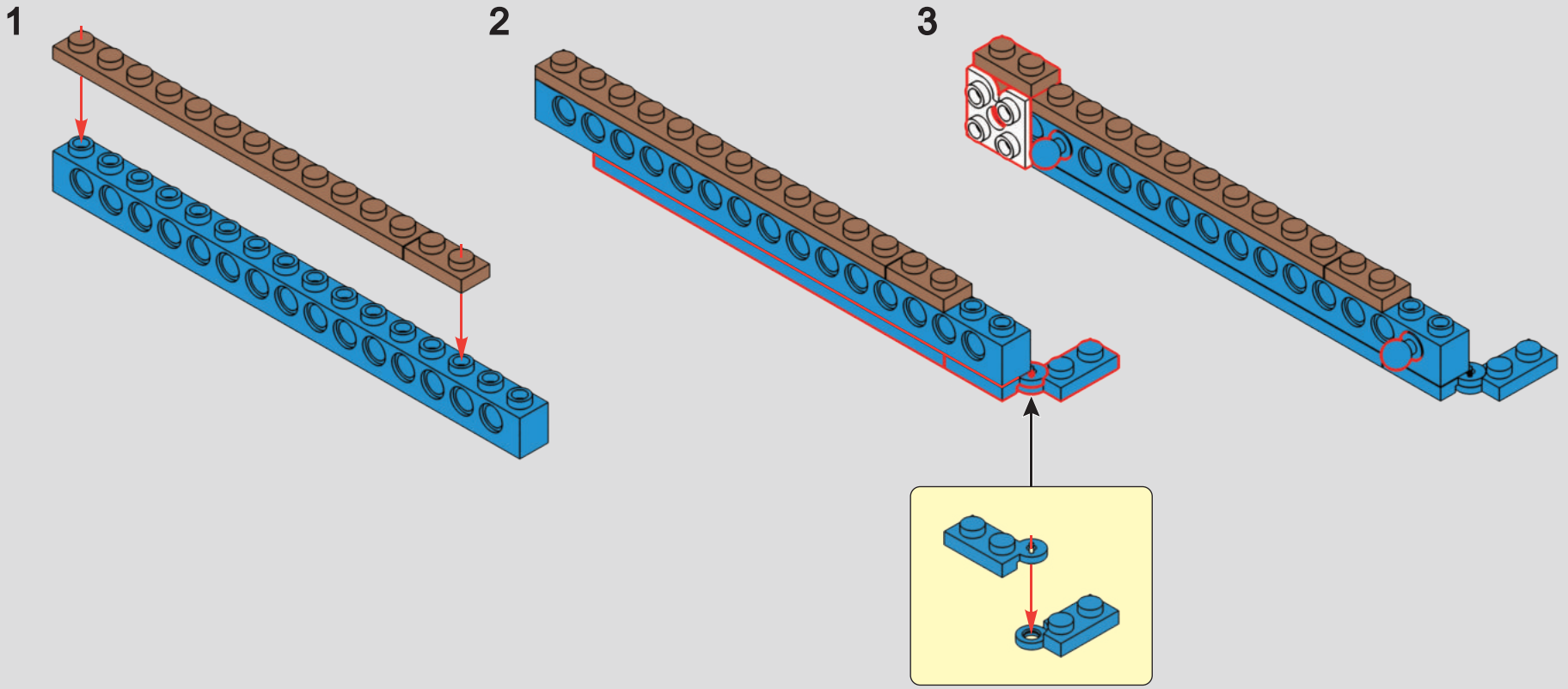

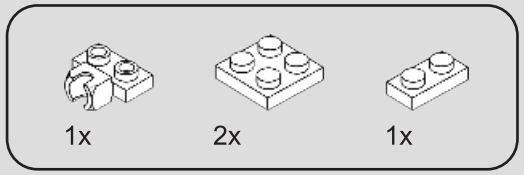

46

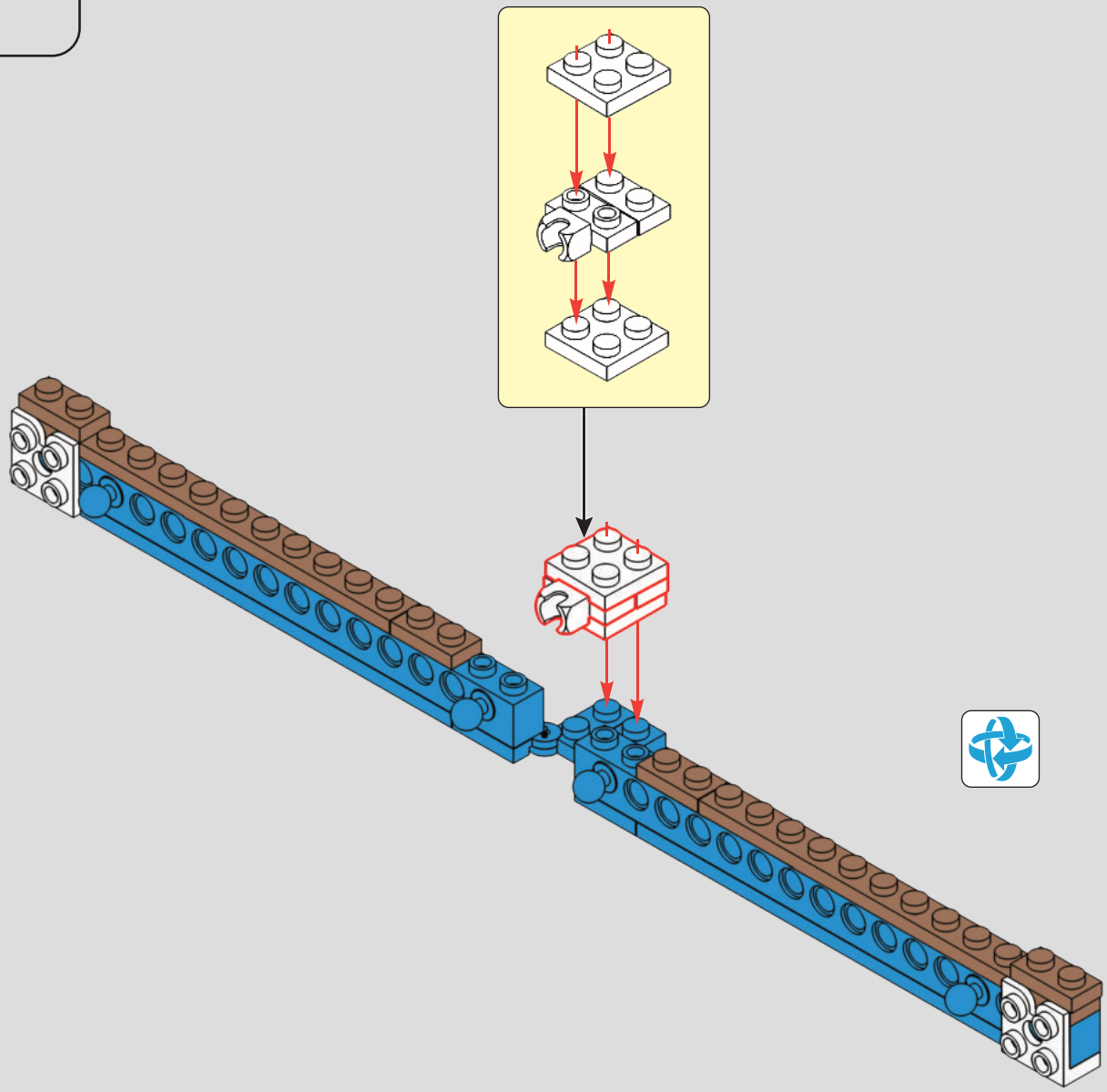

47

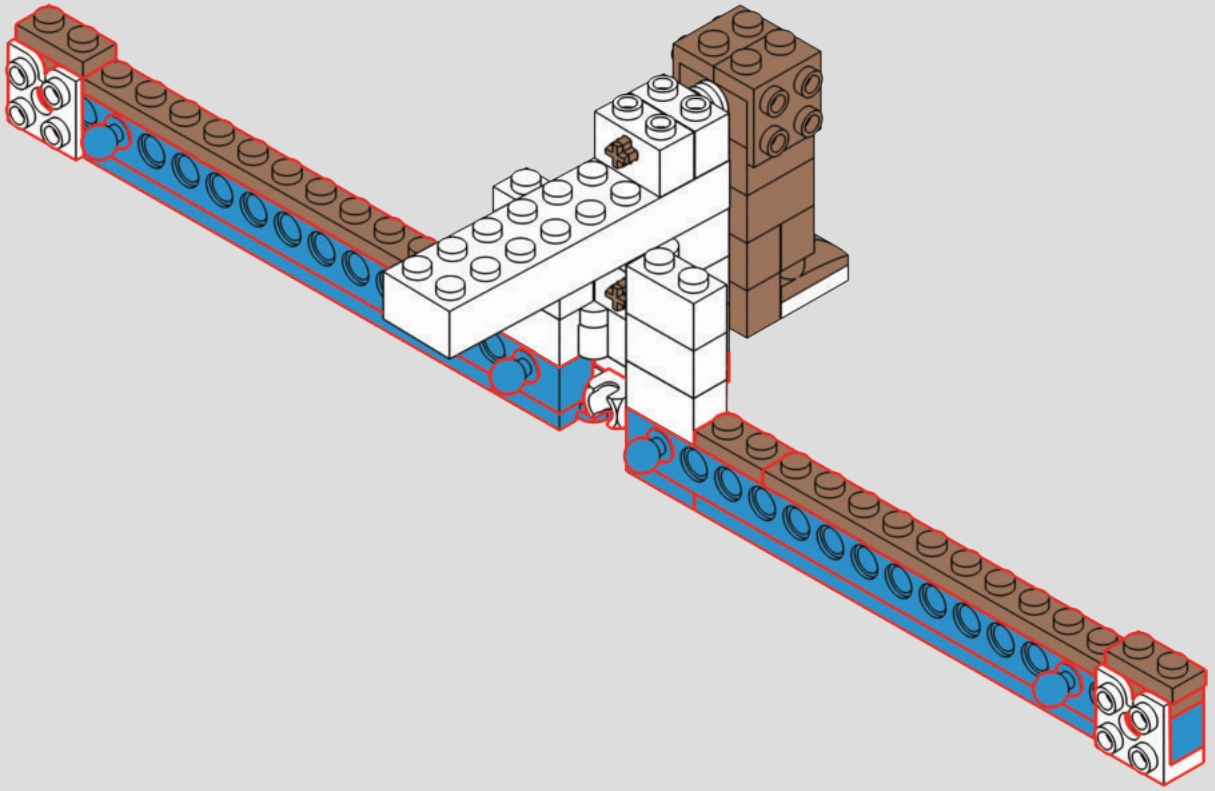

48

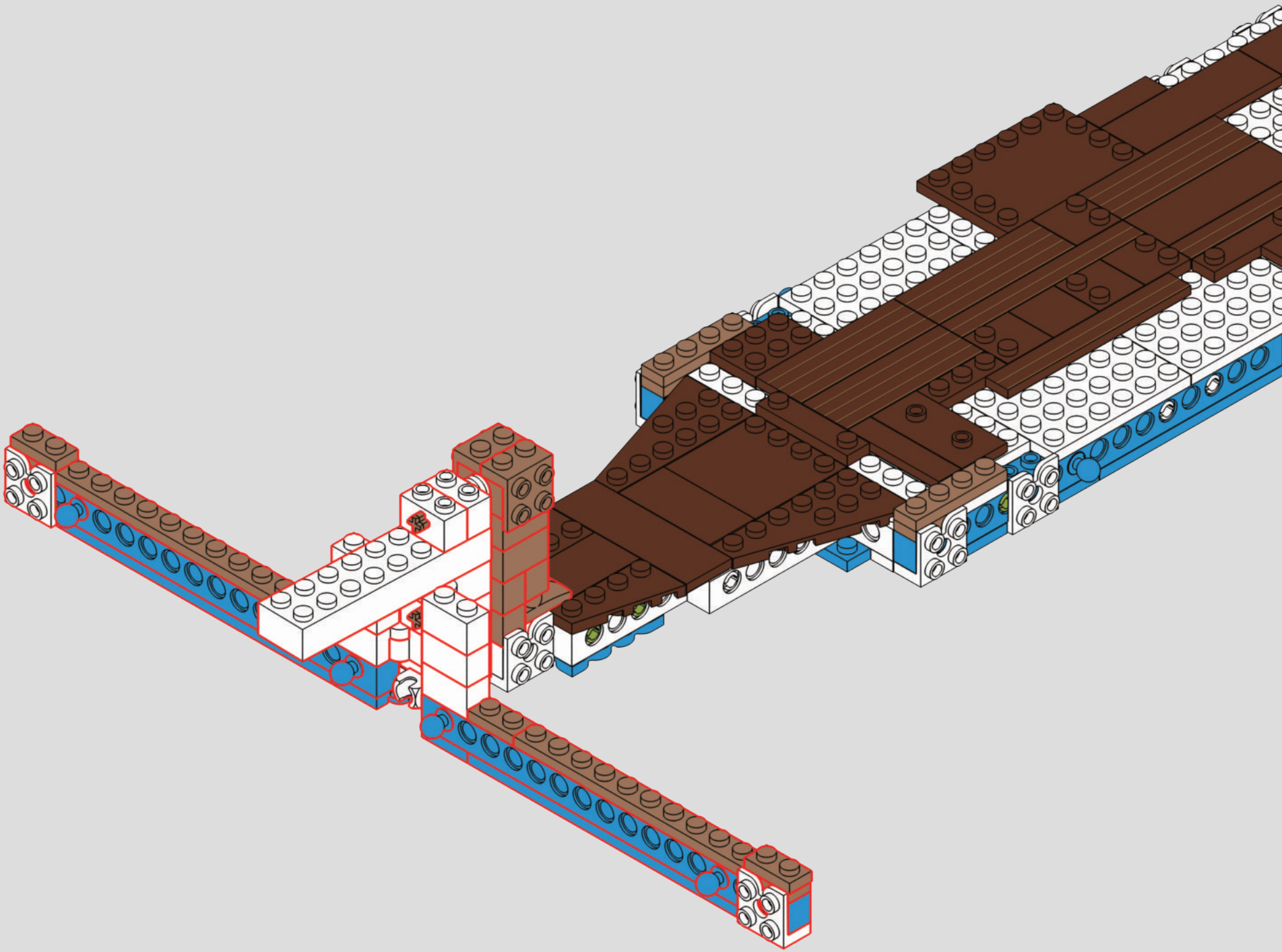

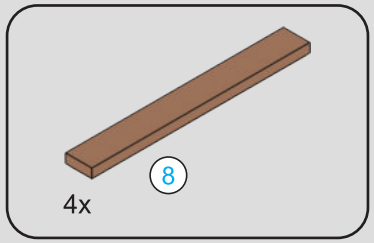



49

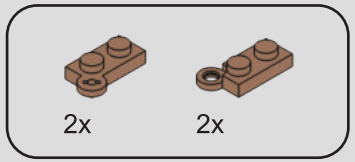

50

1

2

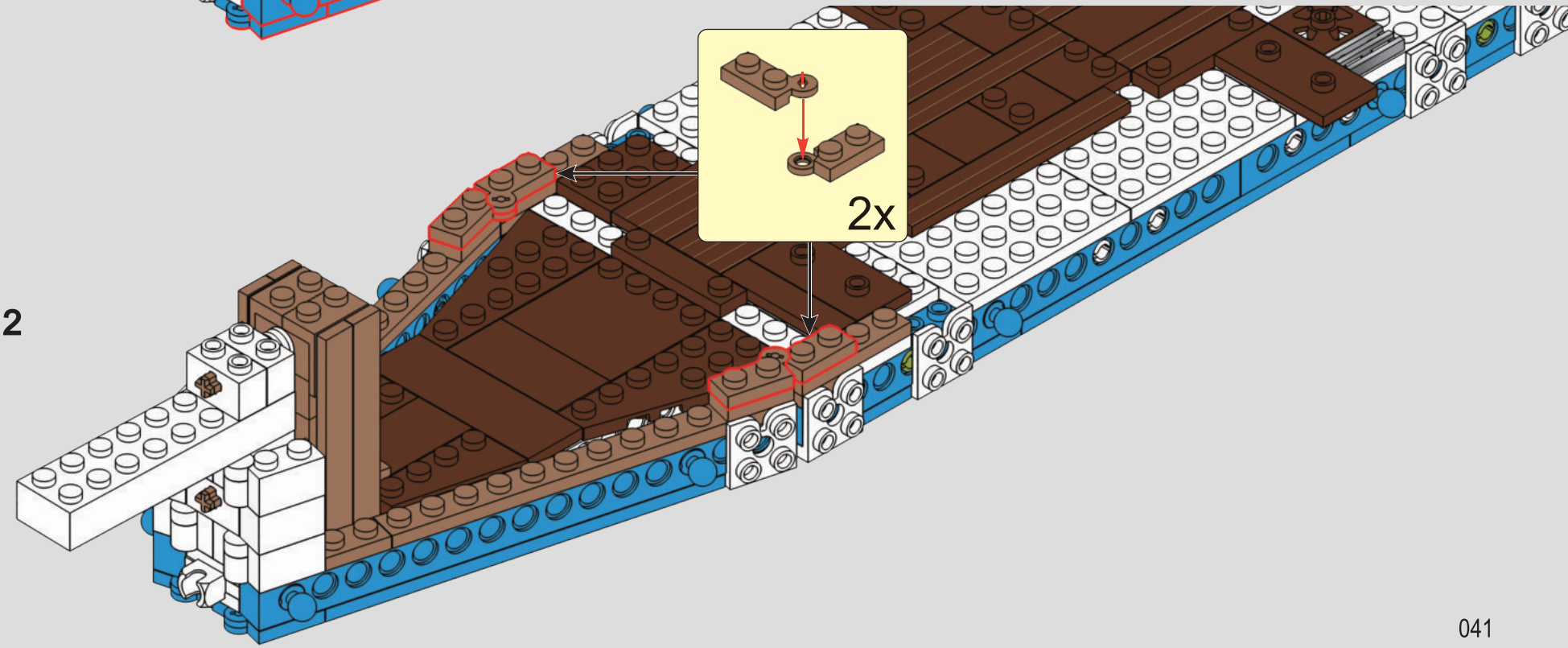

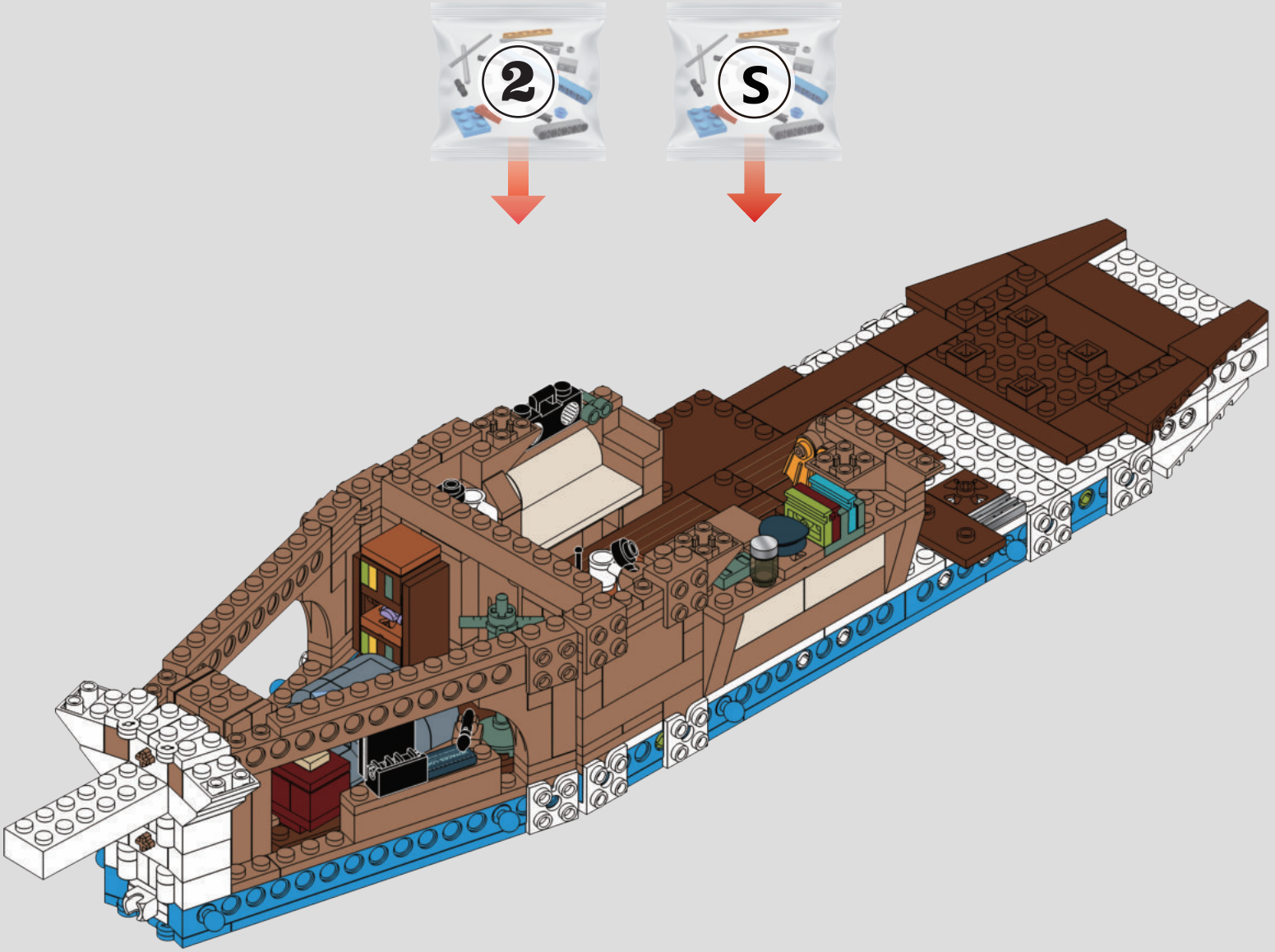
2
S

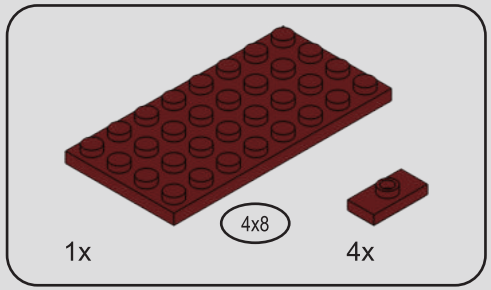

51

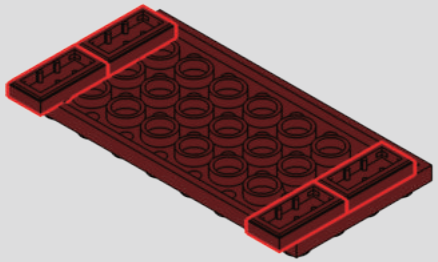

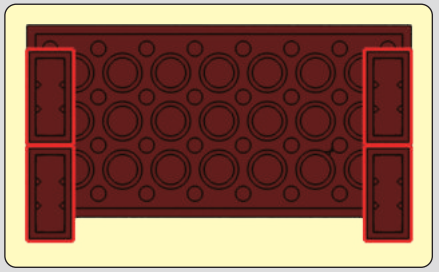

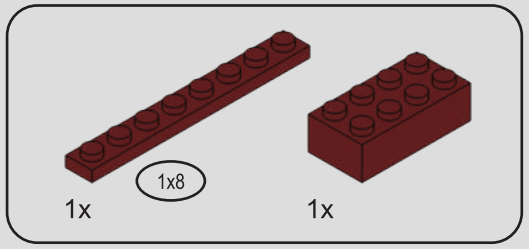

52



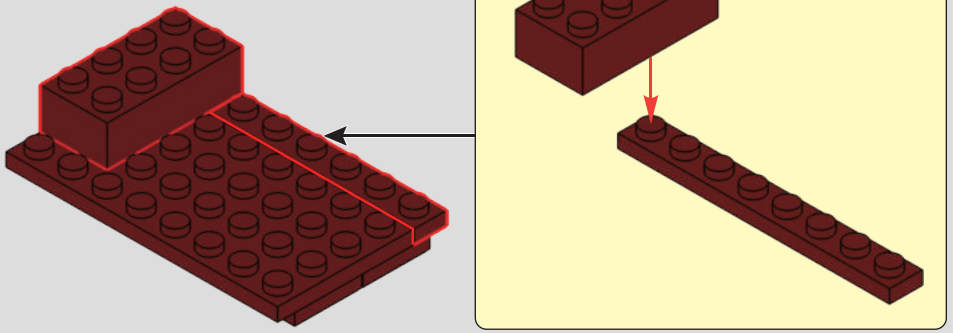

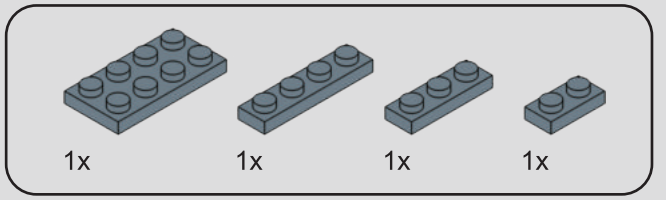

53

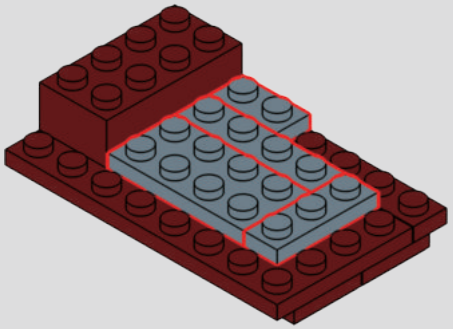

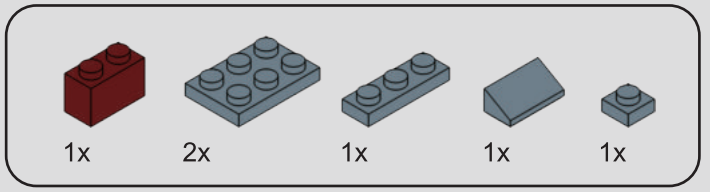

54

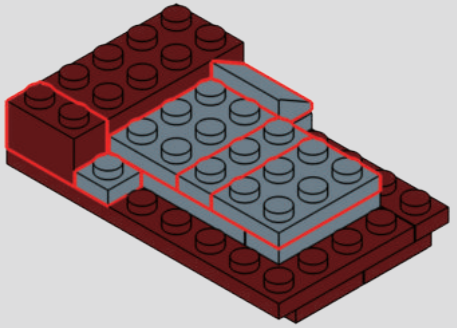

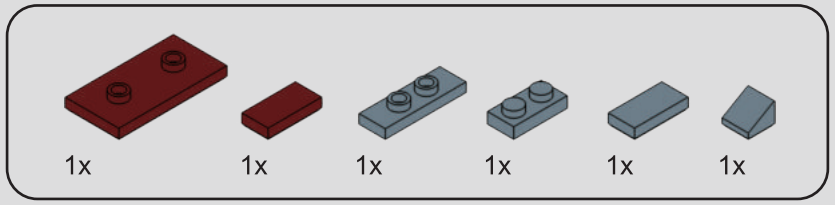

55

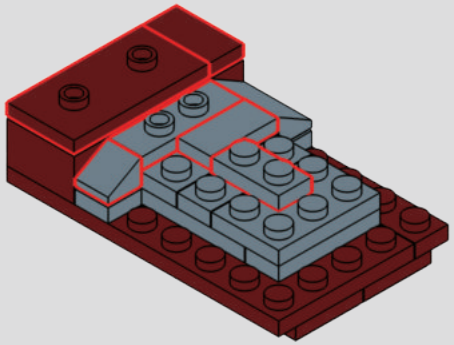

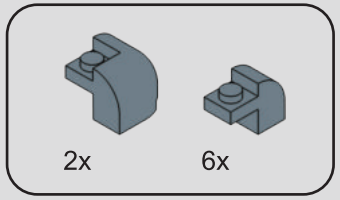

56

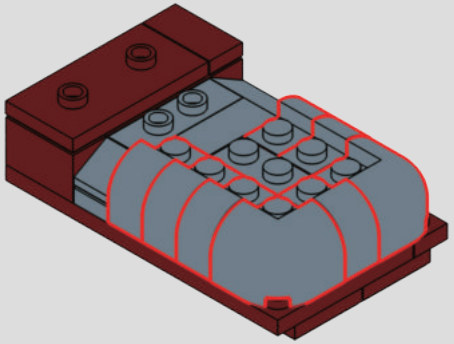

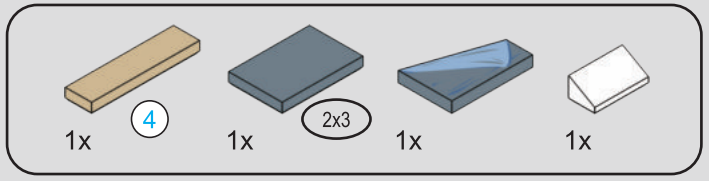

57

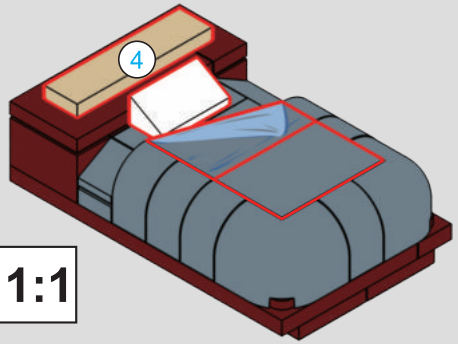



58

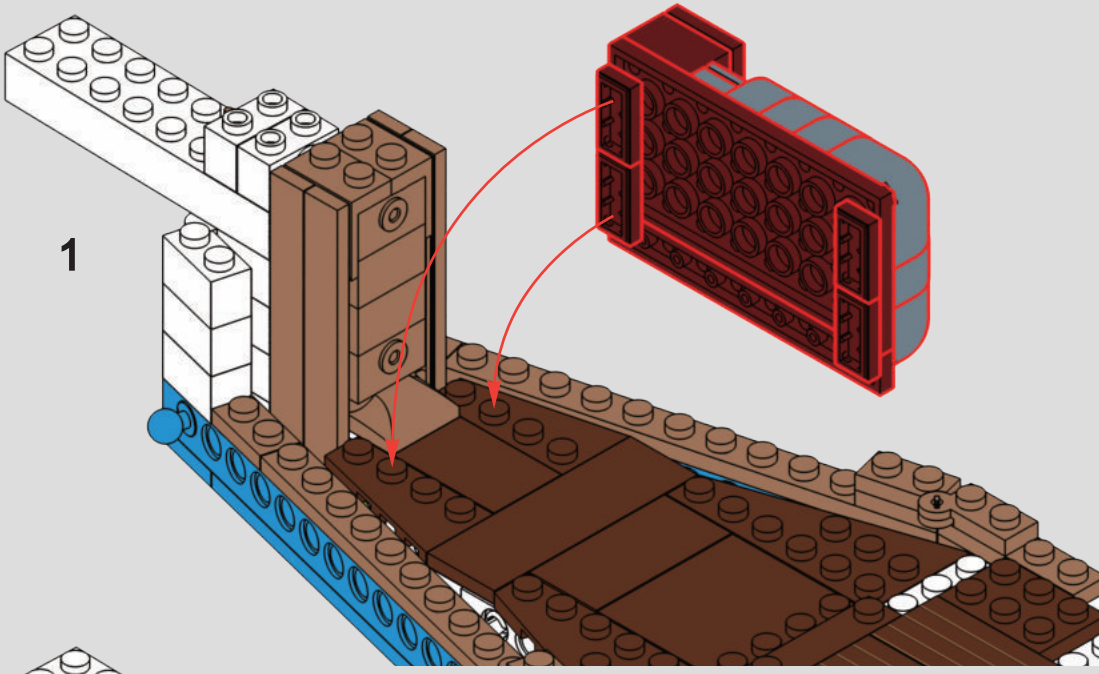

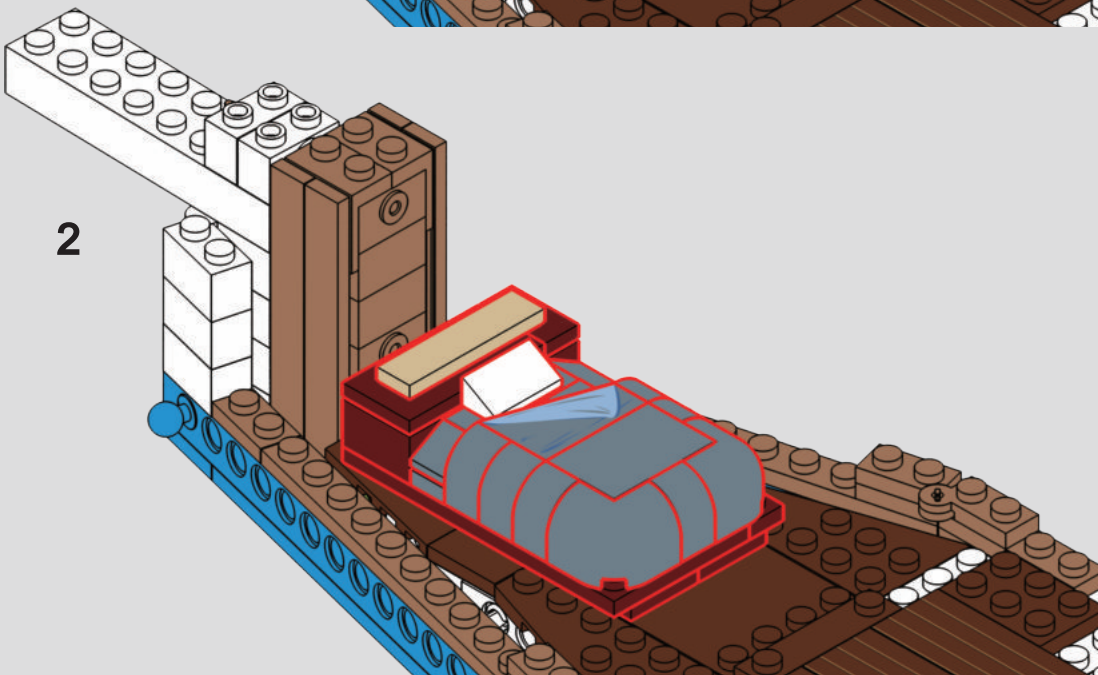

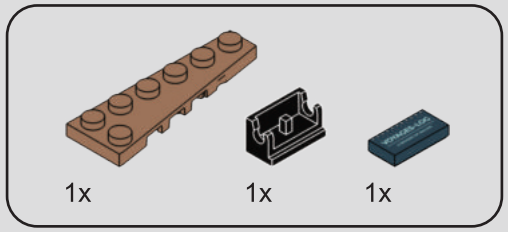

59

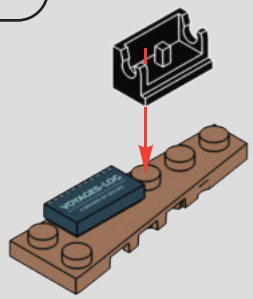

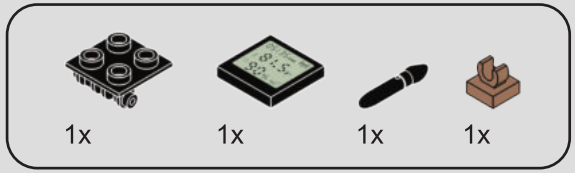

60

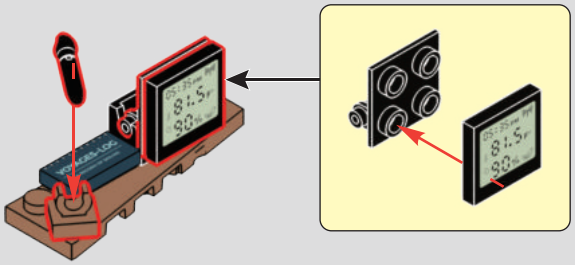

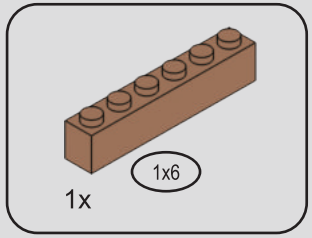

61

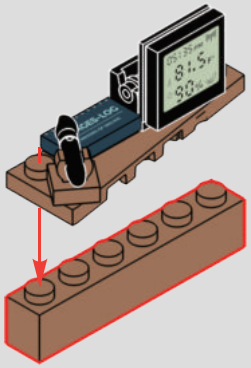

62

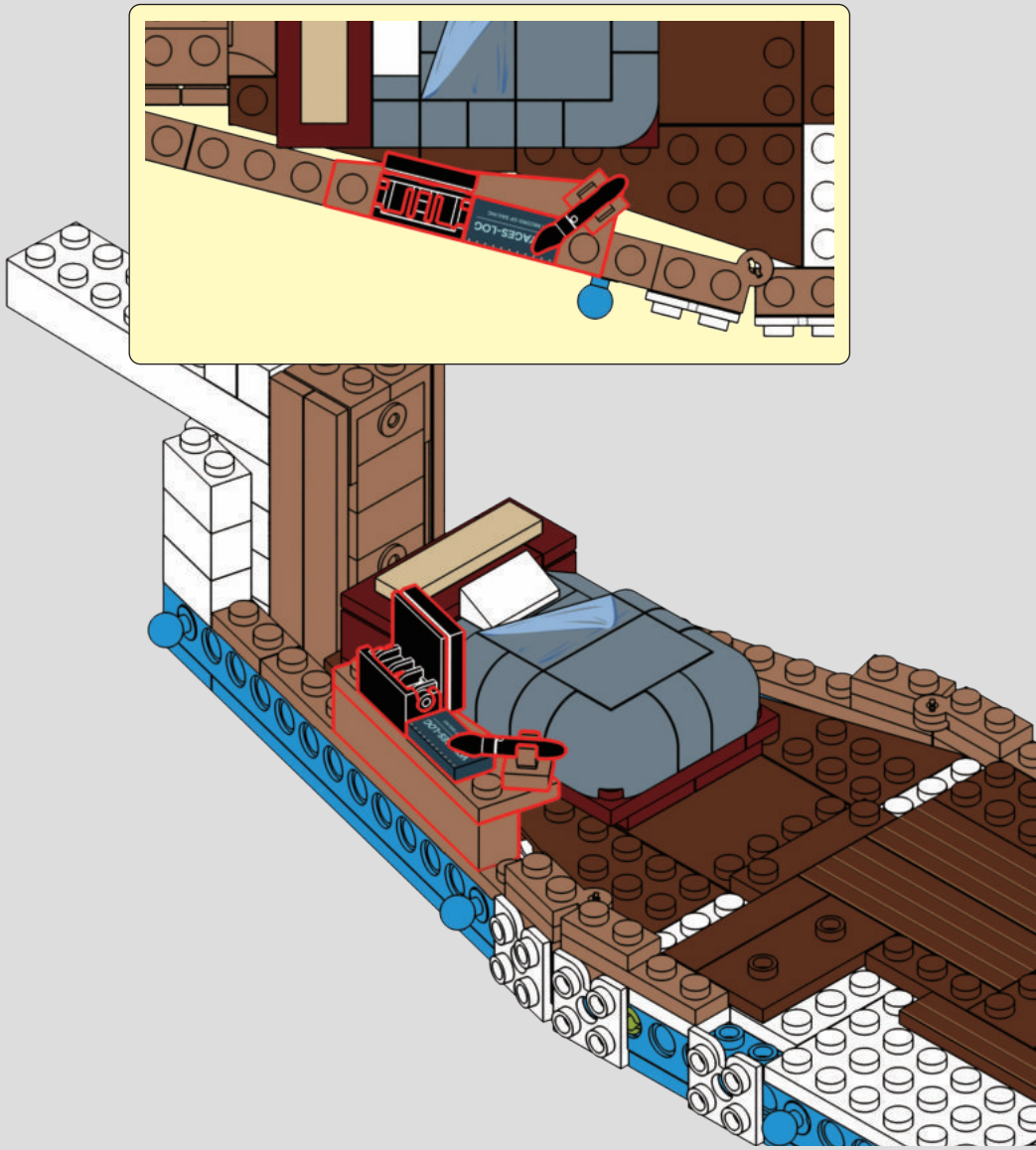

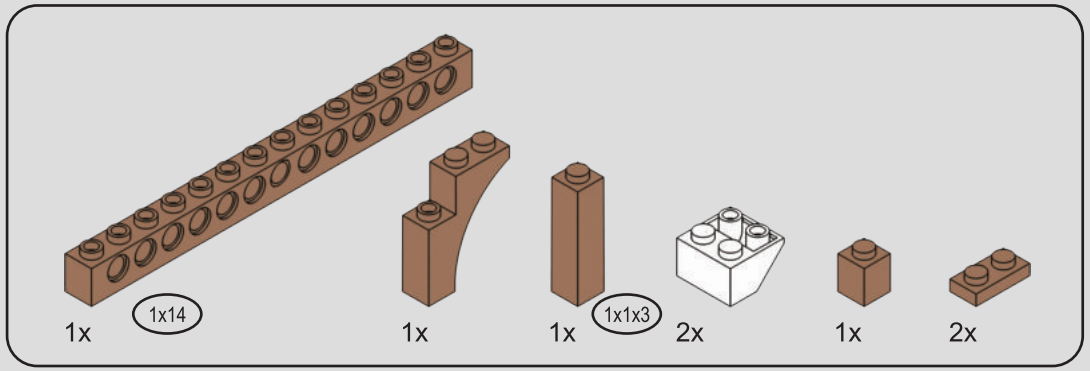

63

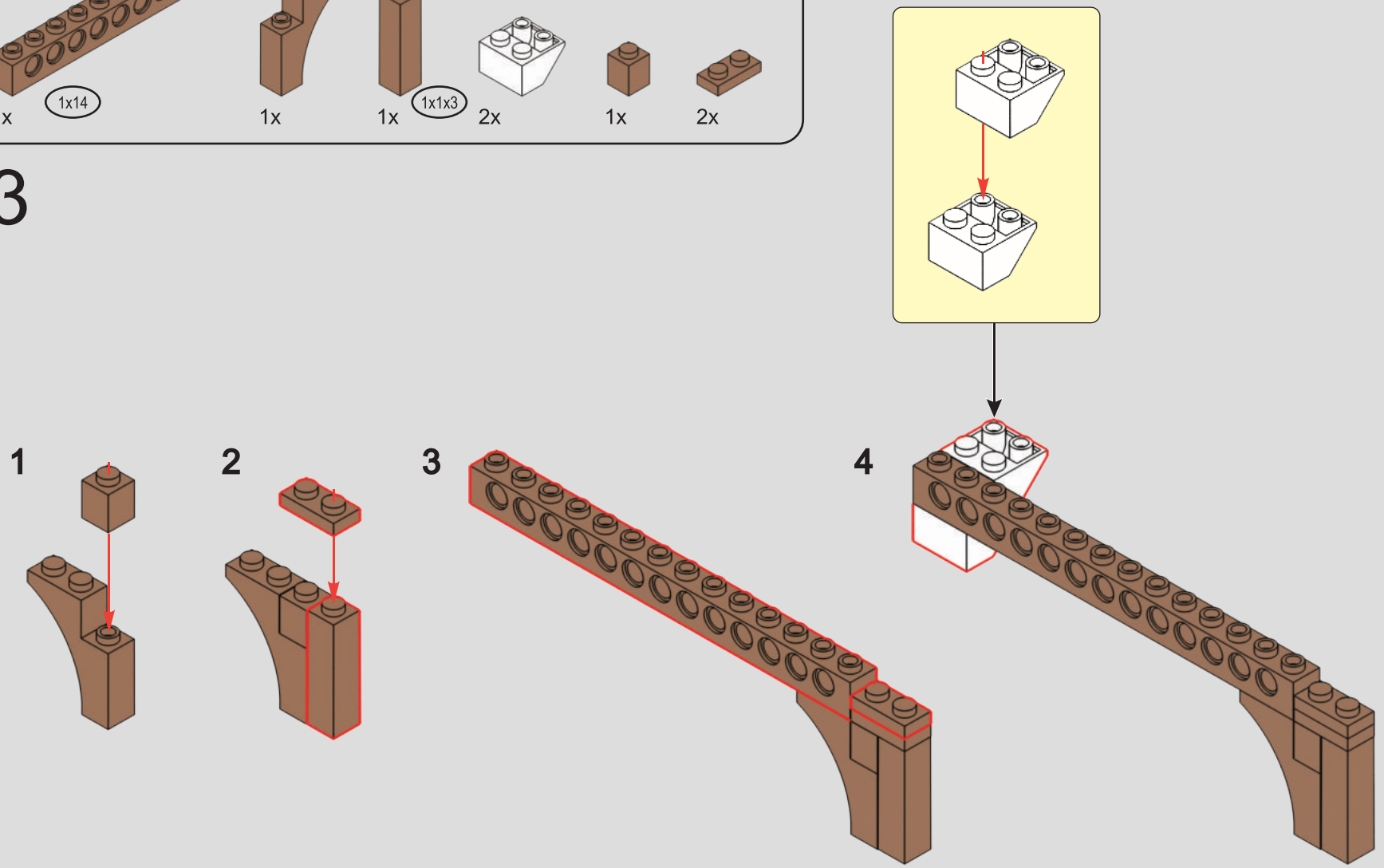

64

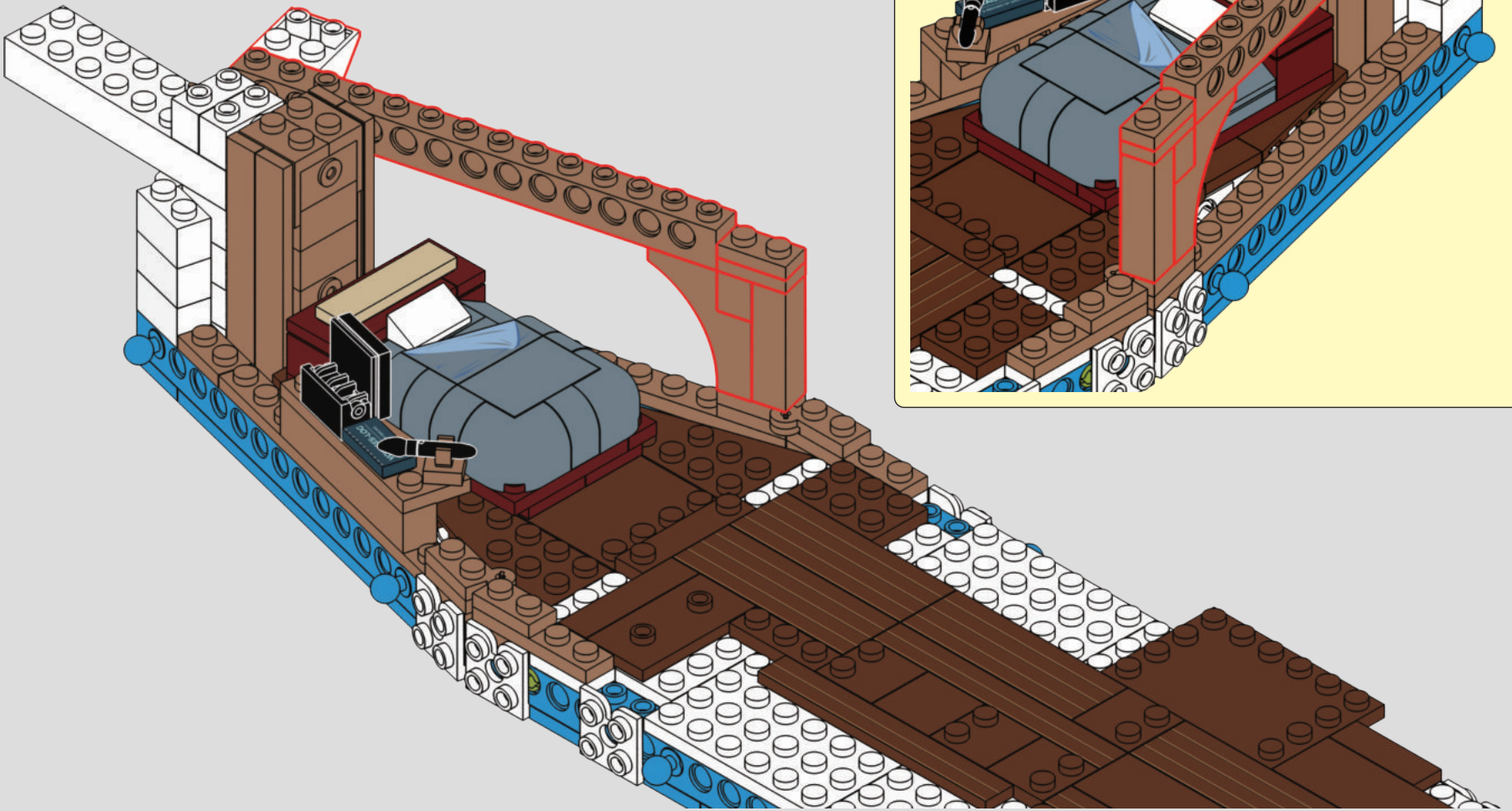

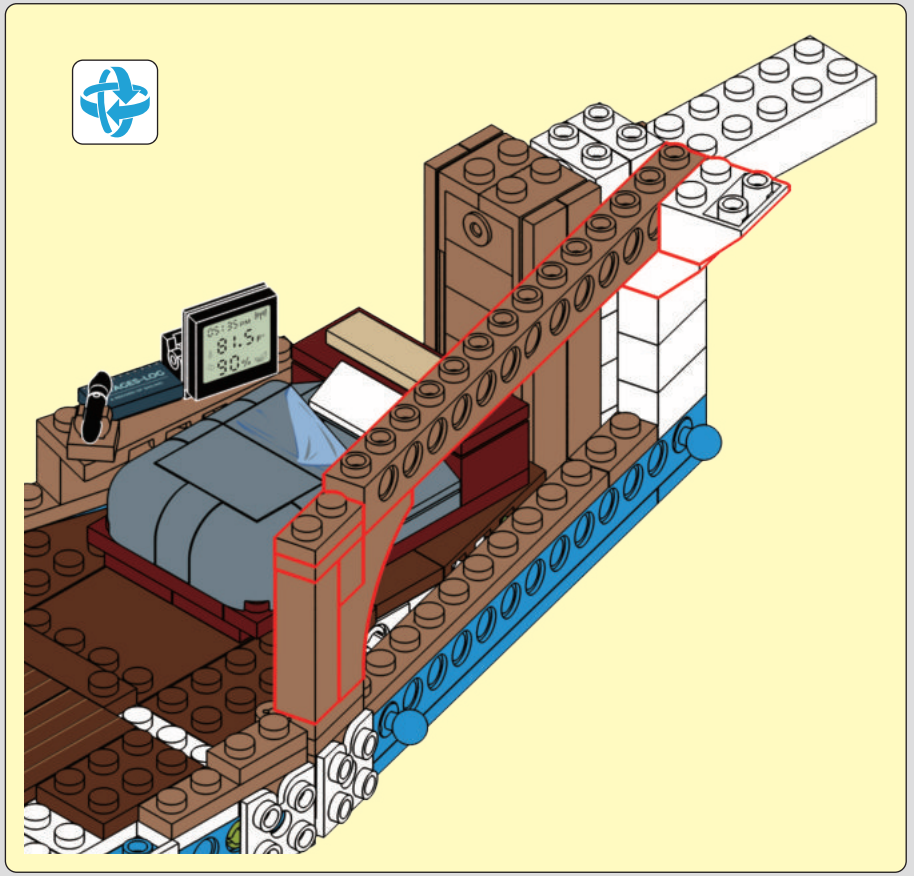

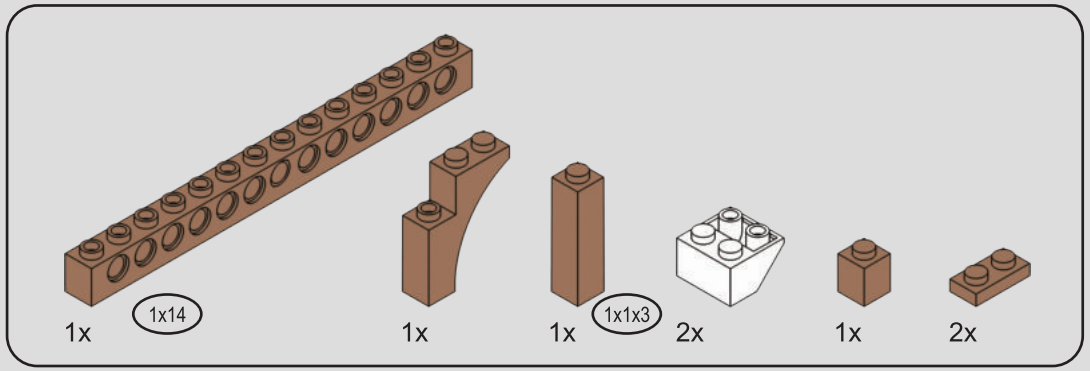

65

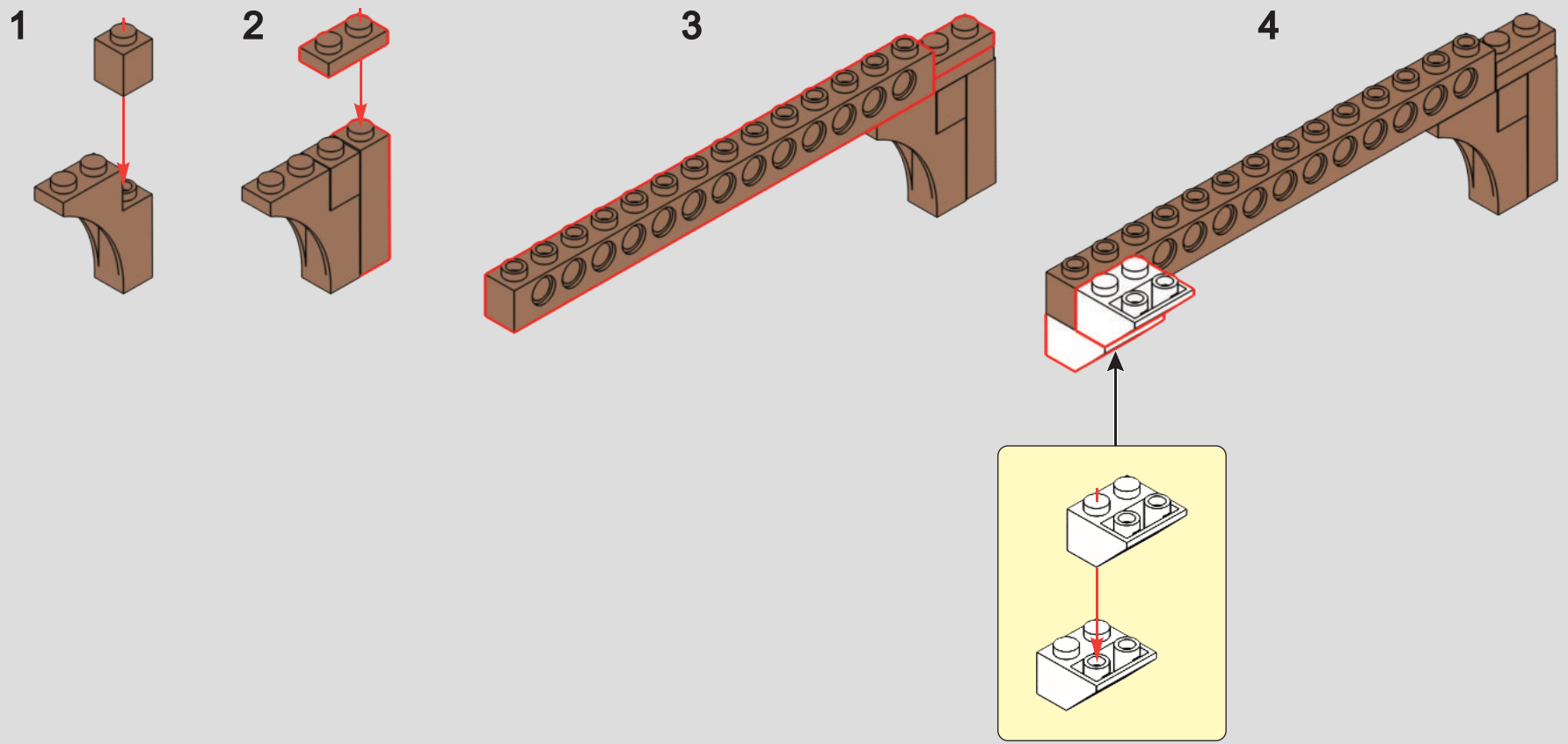

66

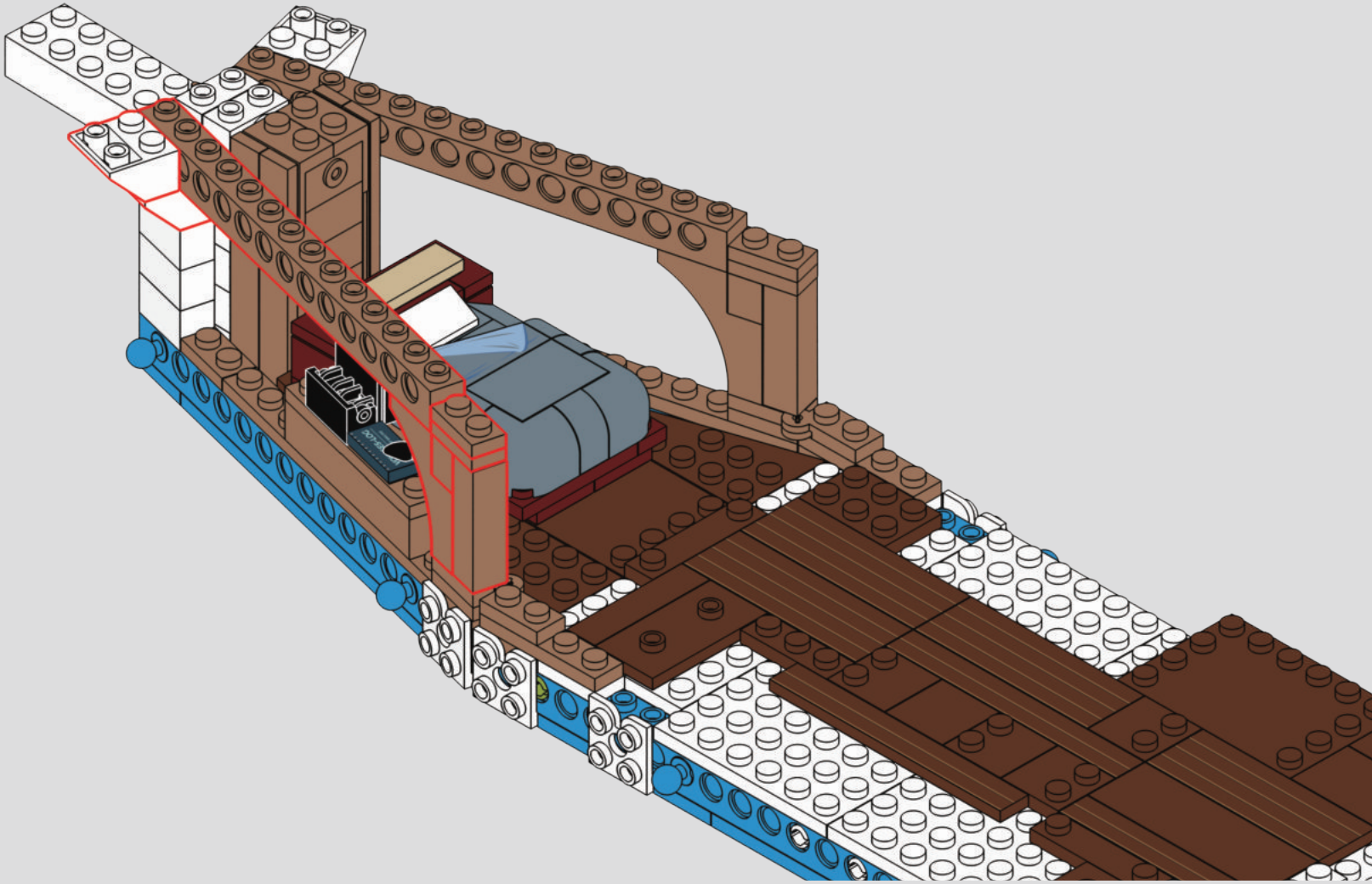

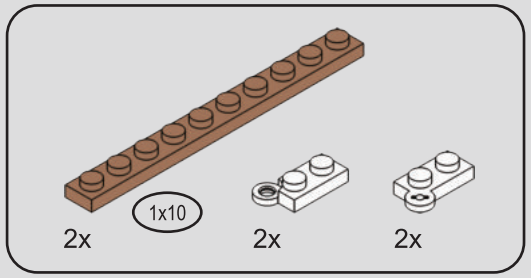

67

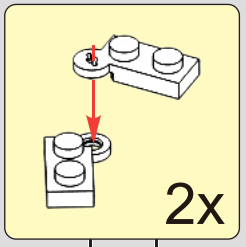

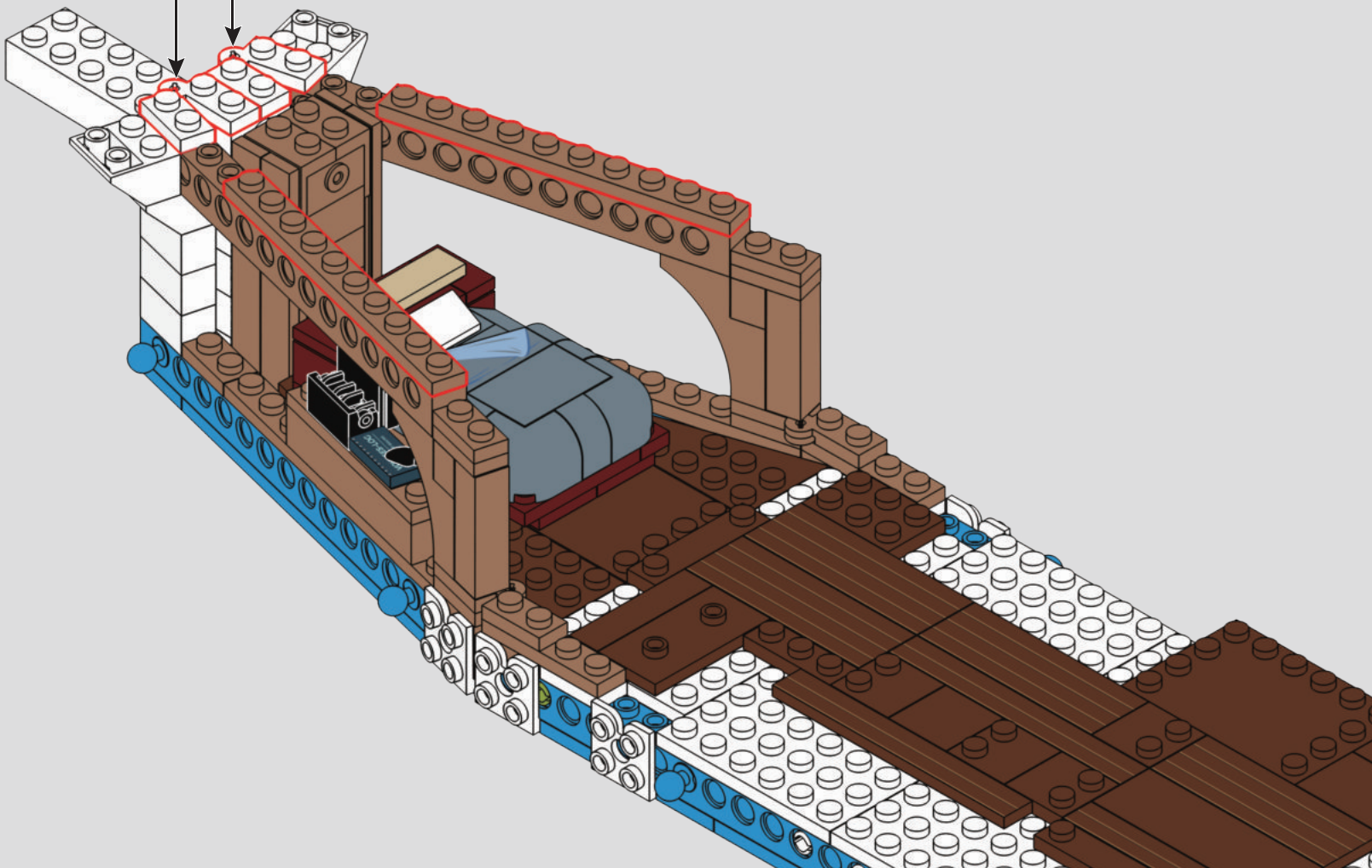

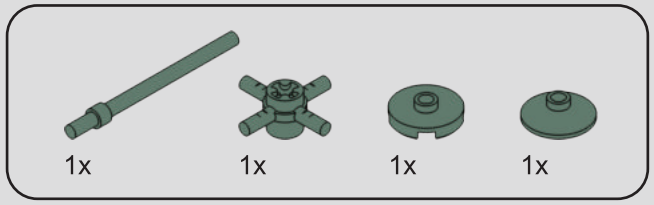

68

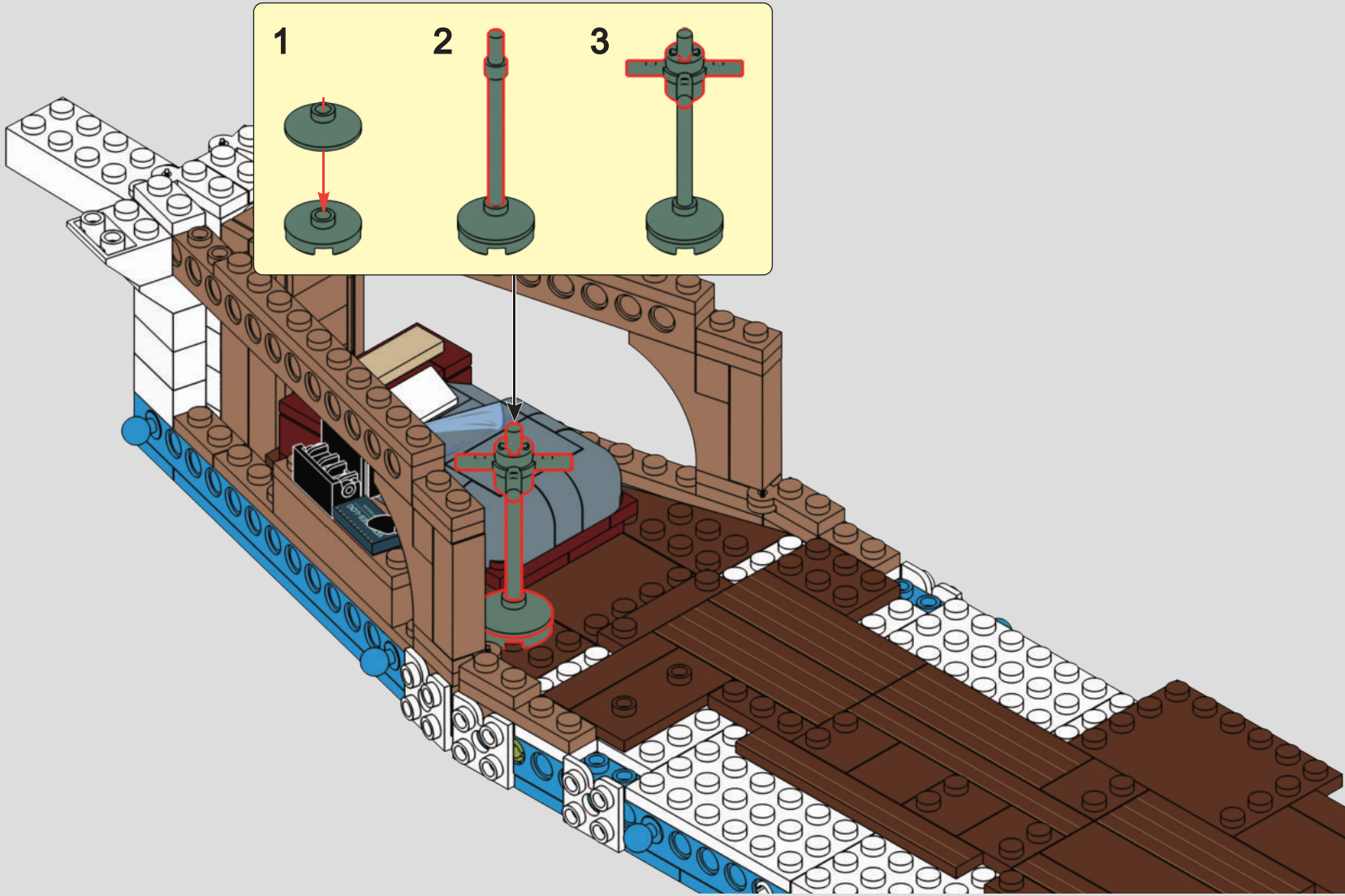

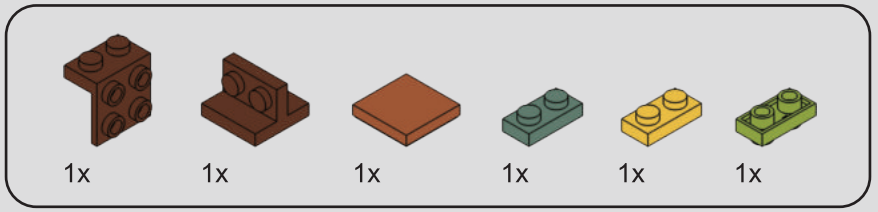

69

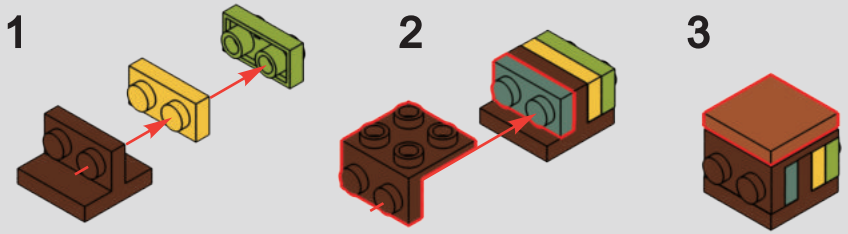

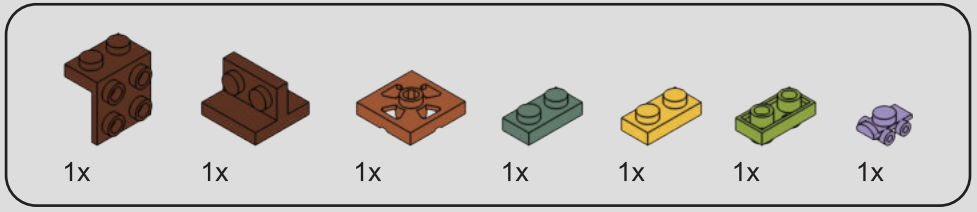

70

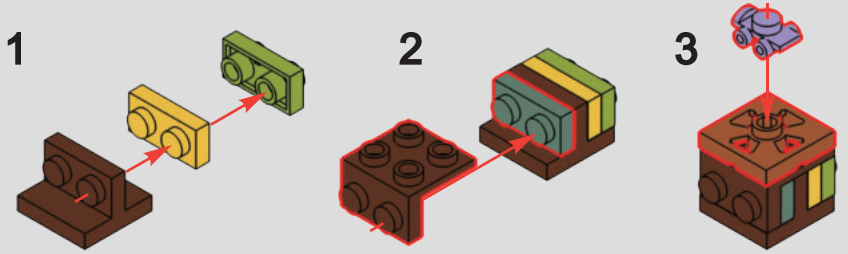

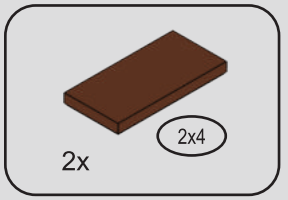

71

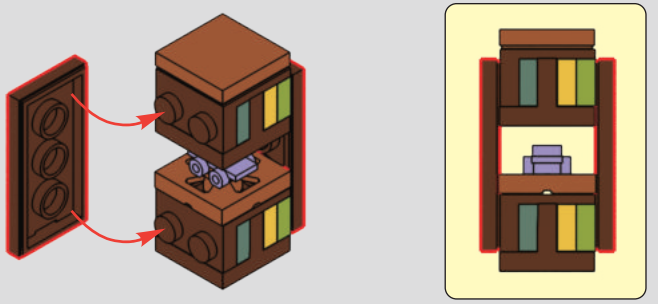

72

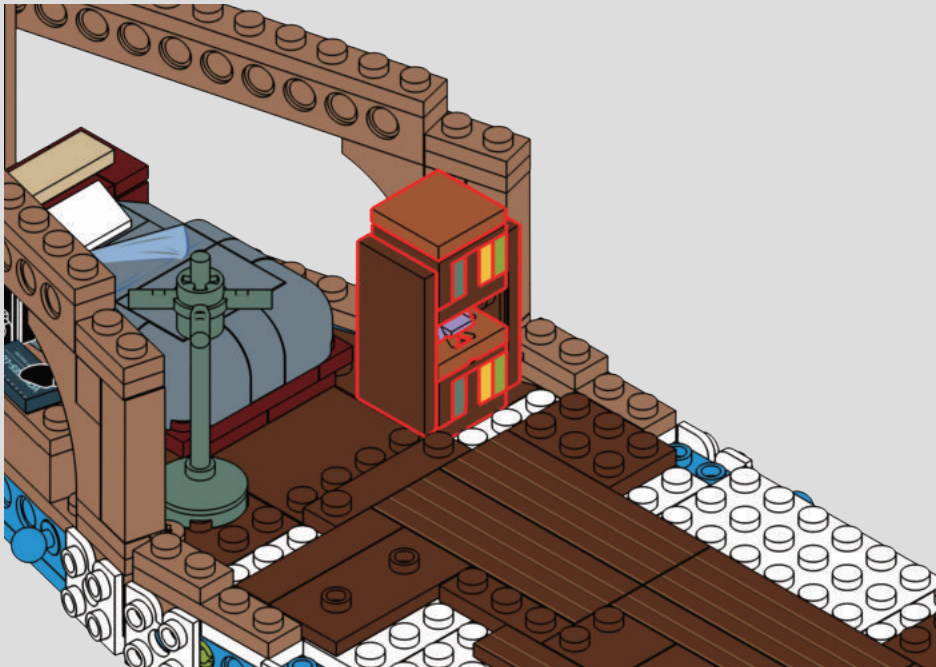

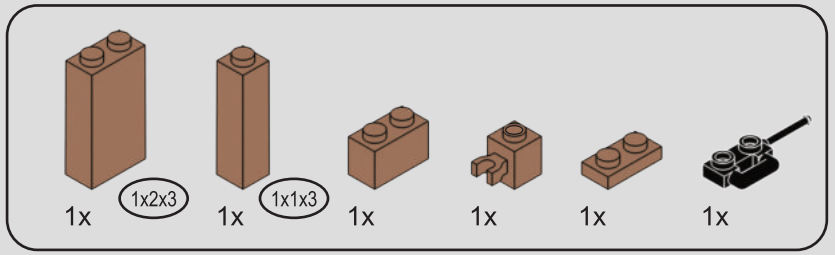

73

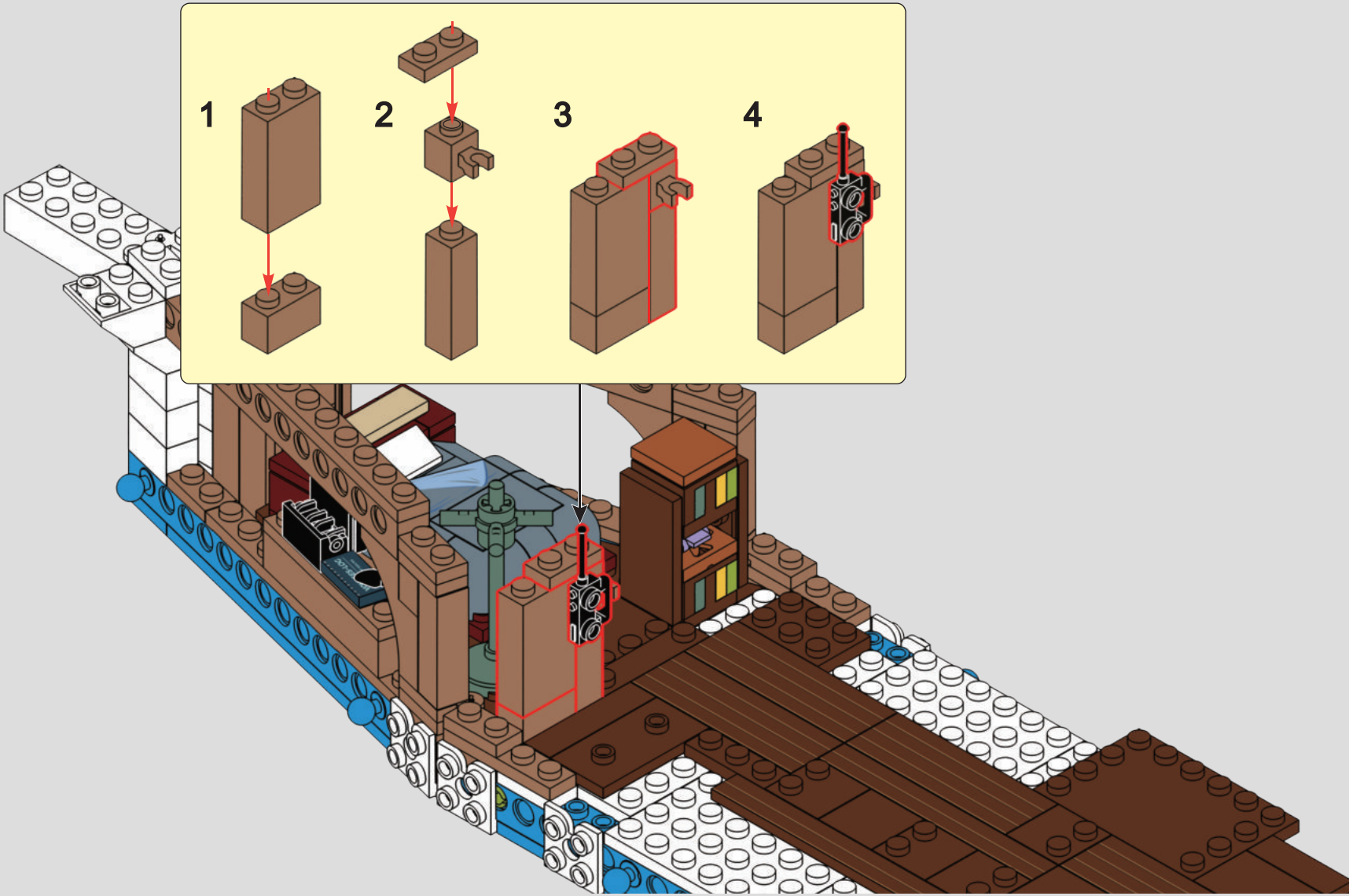

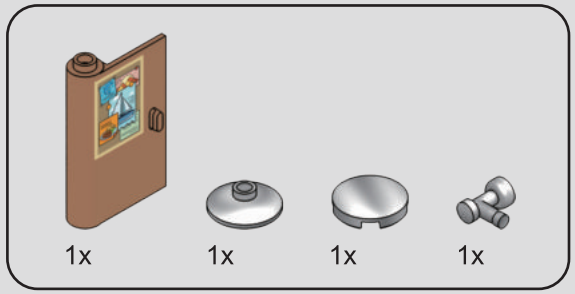

74

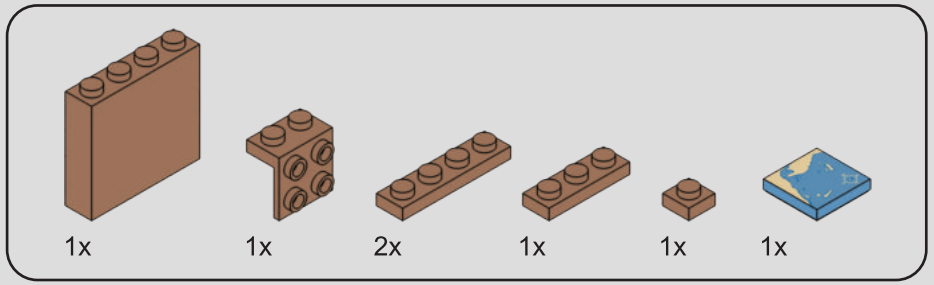

75

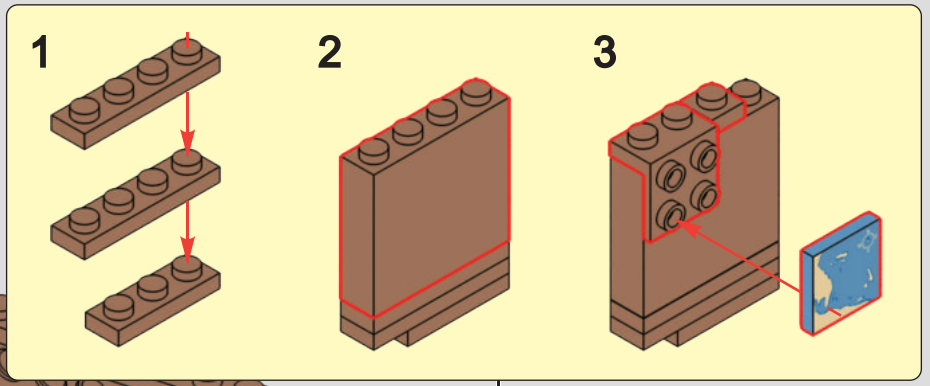

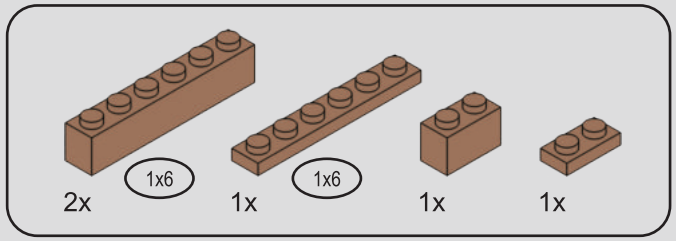

76

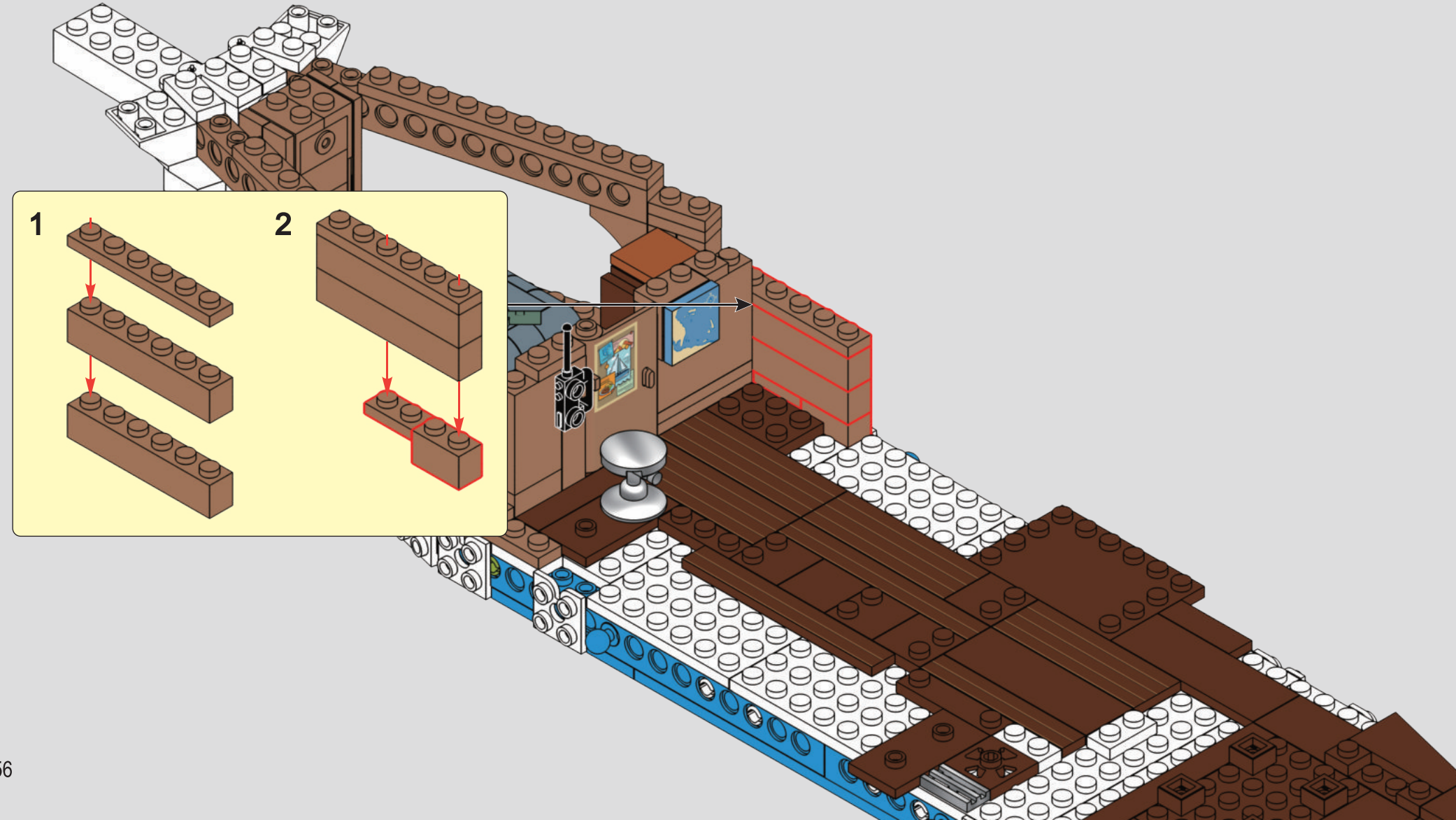

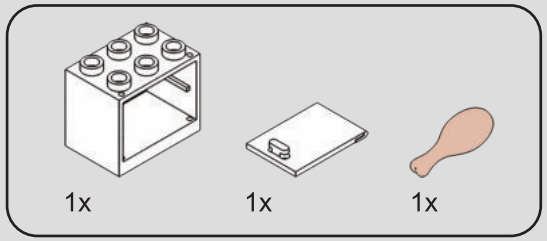

77

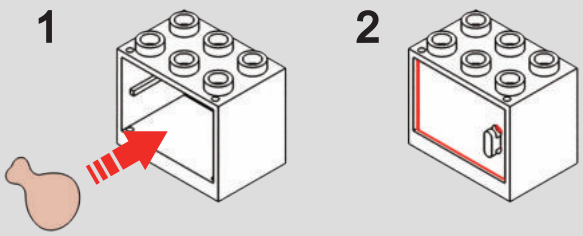

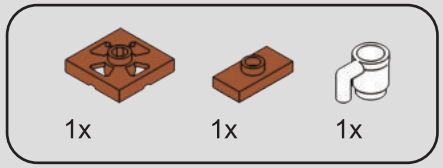

78

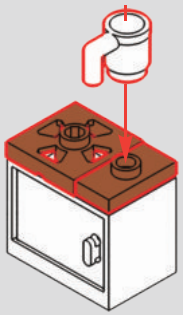

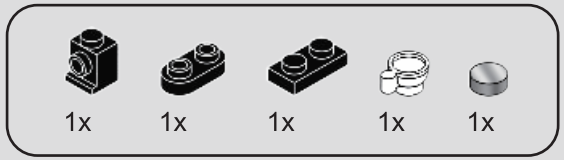

79

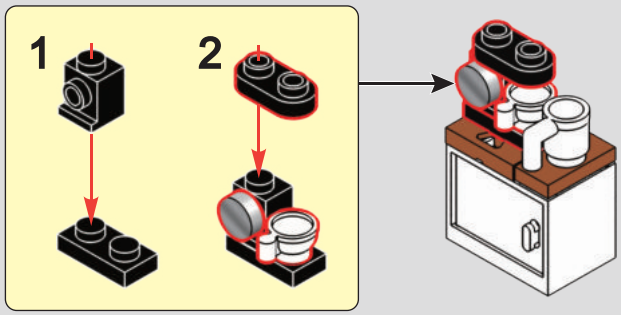

80

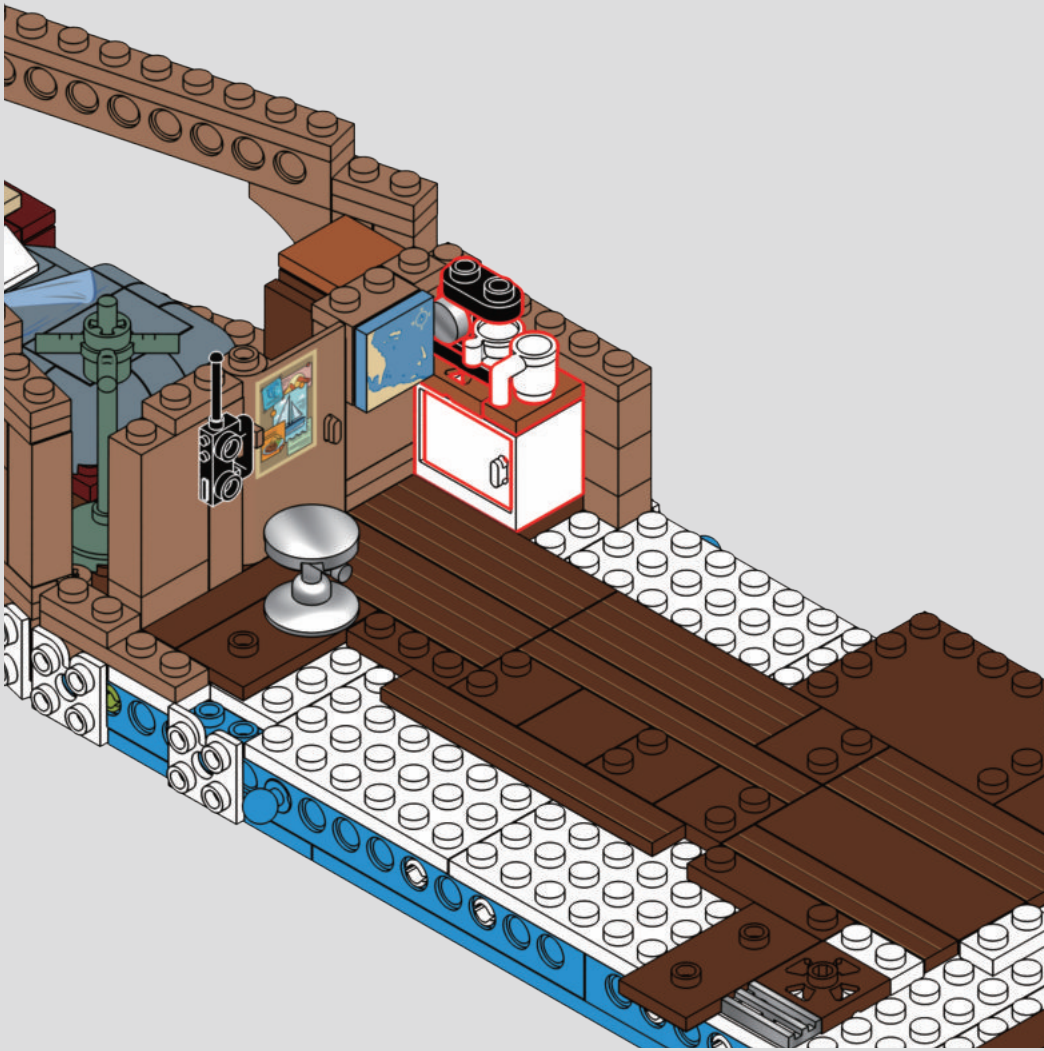

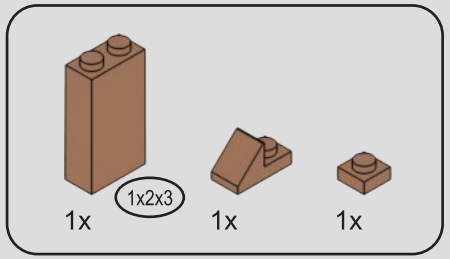

81

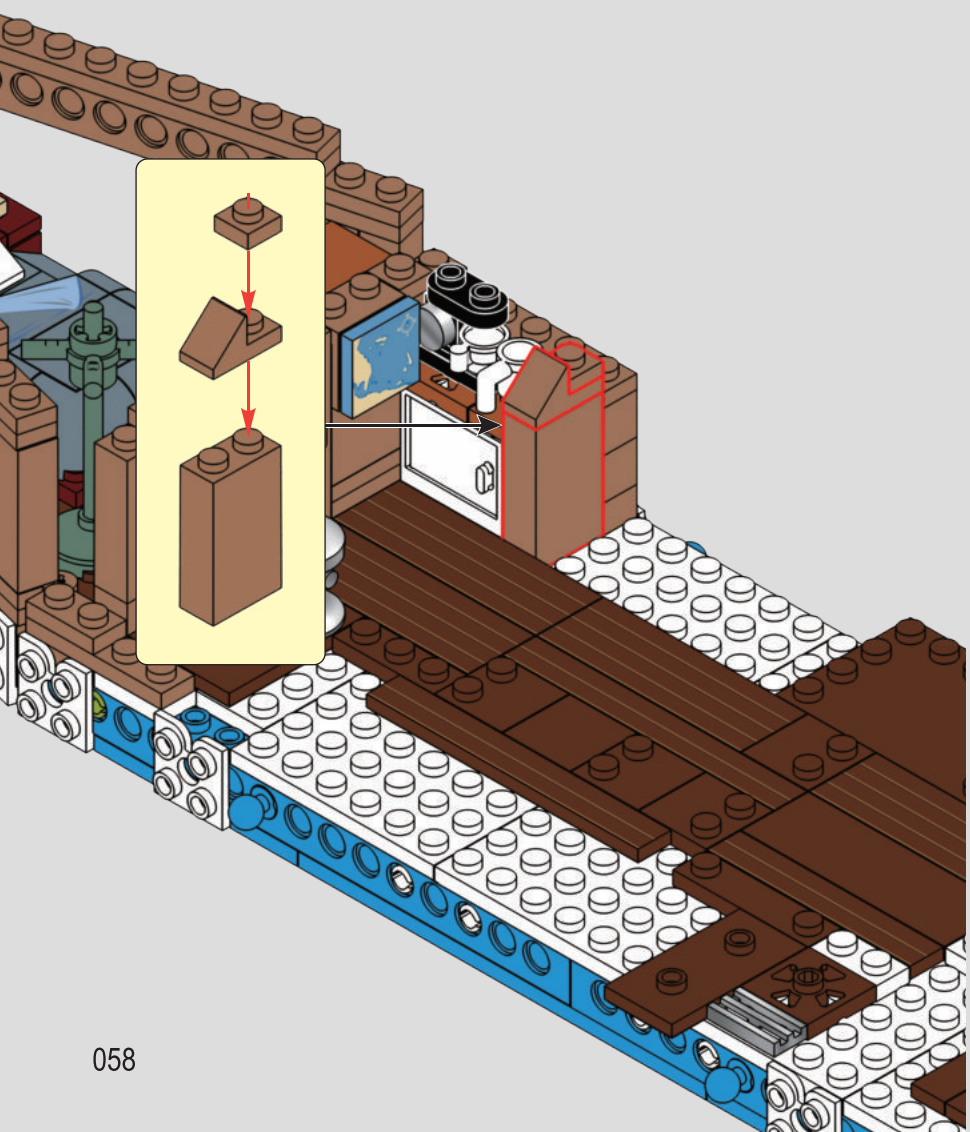

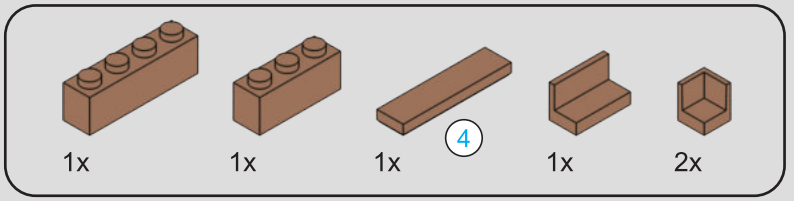

82

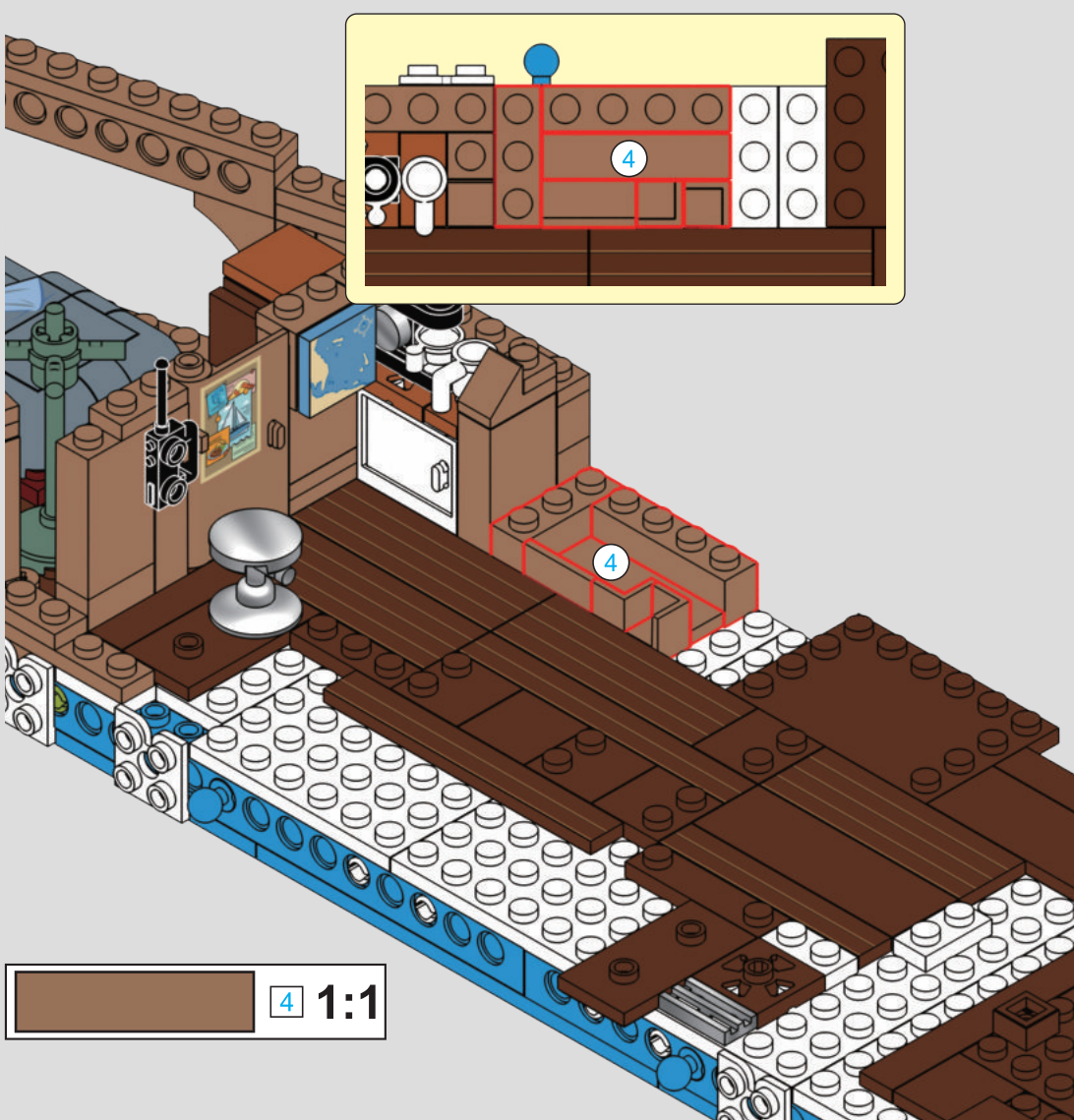

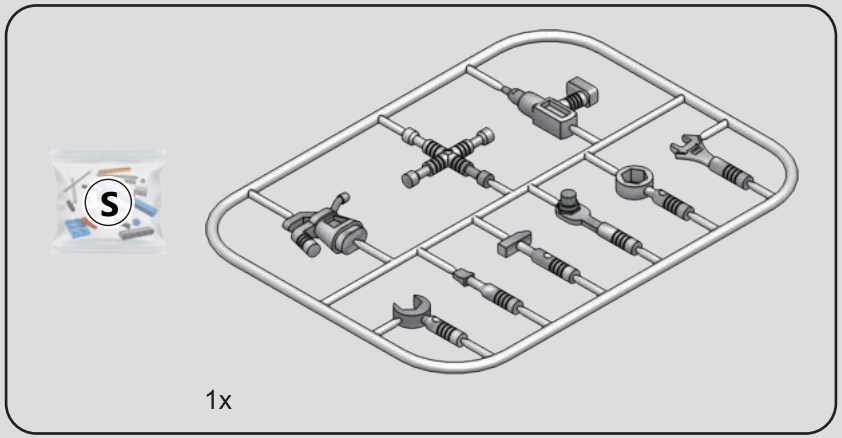

83

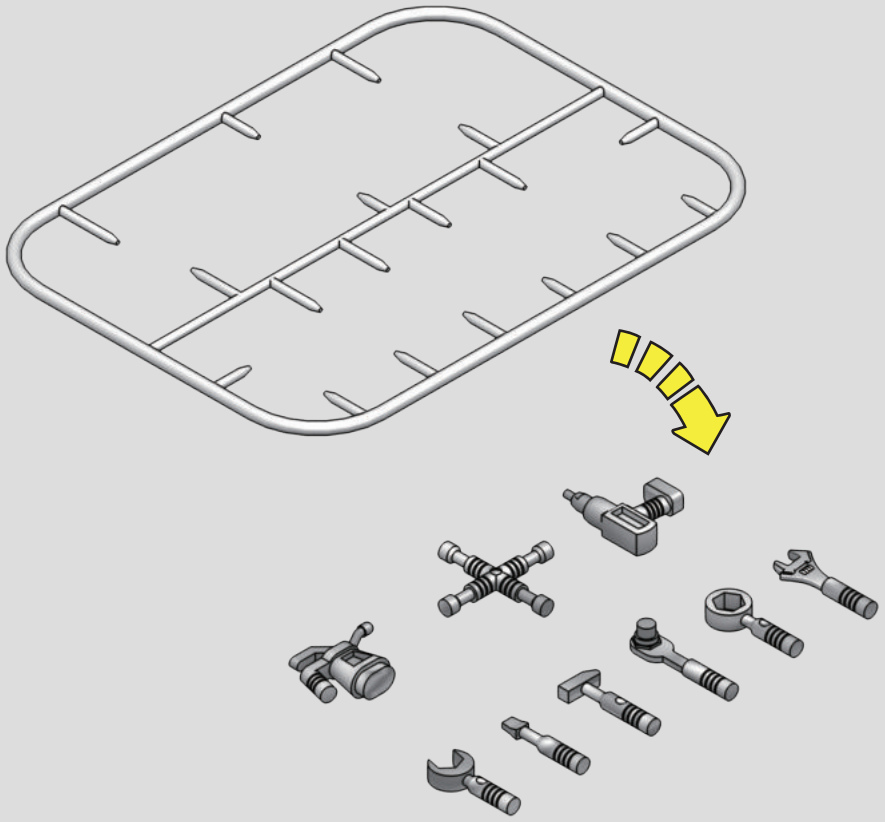

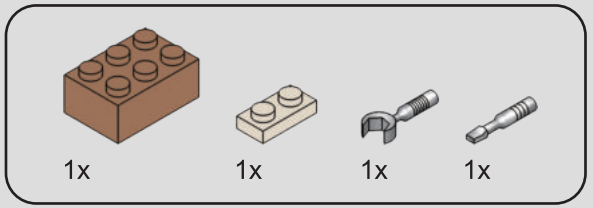

84

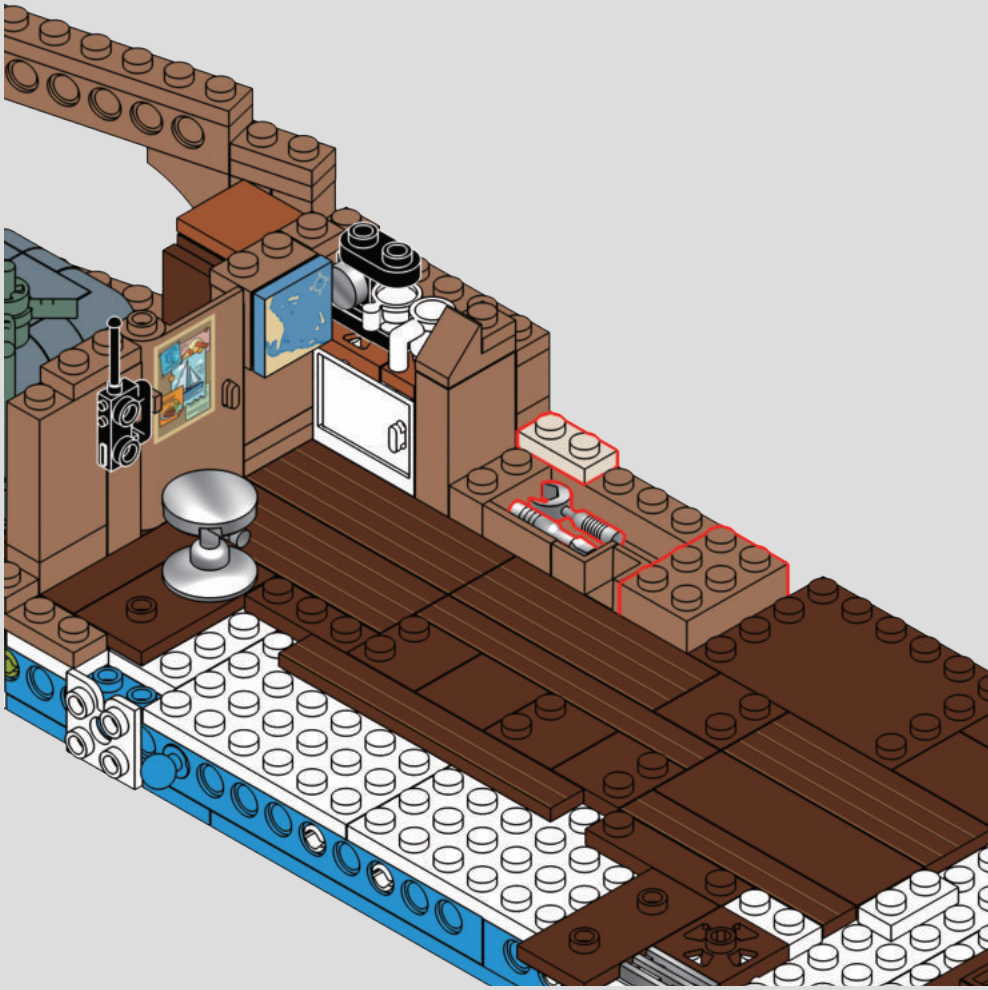

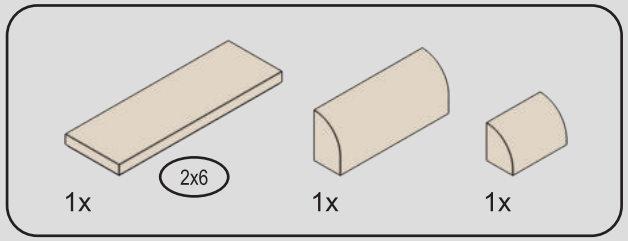

85



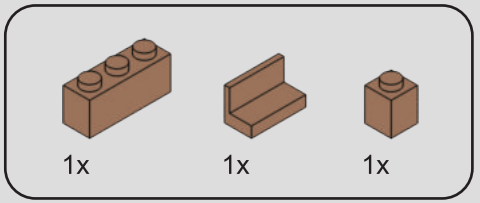

86

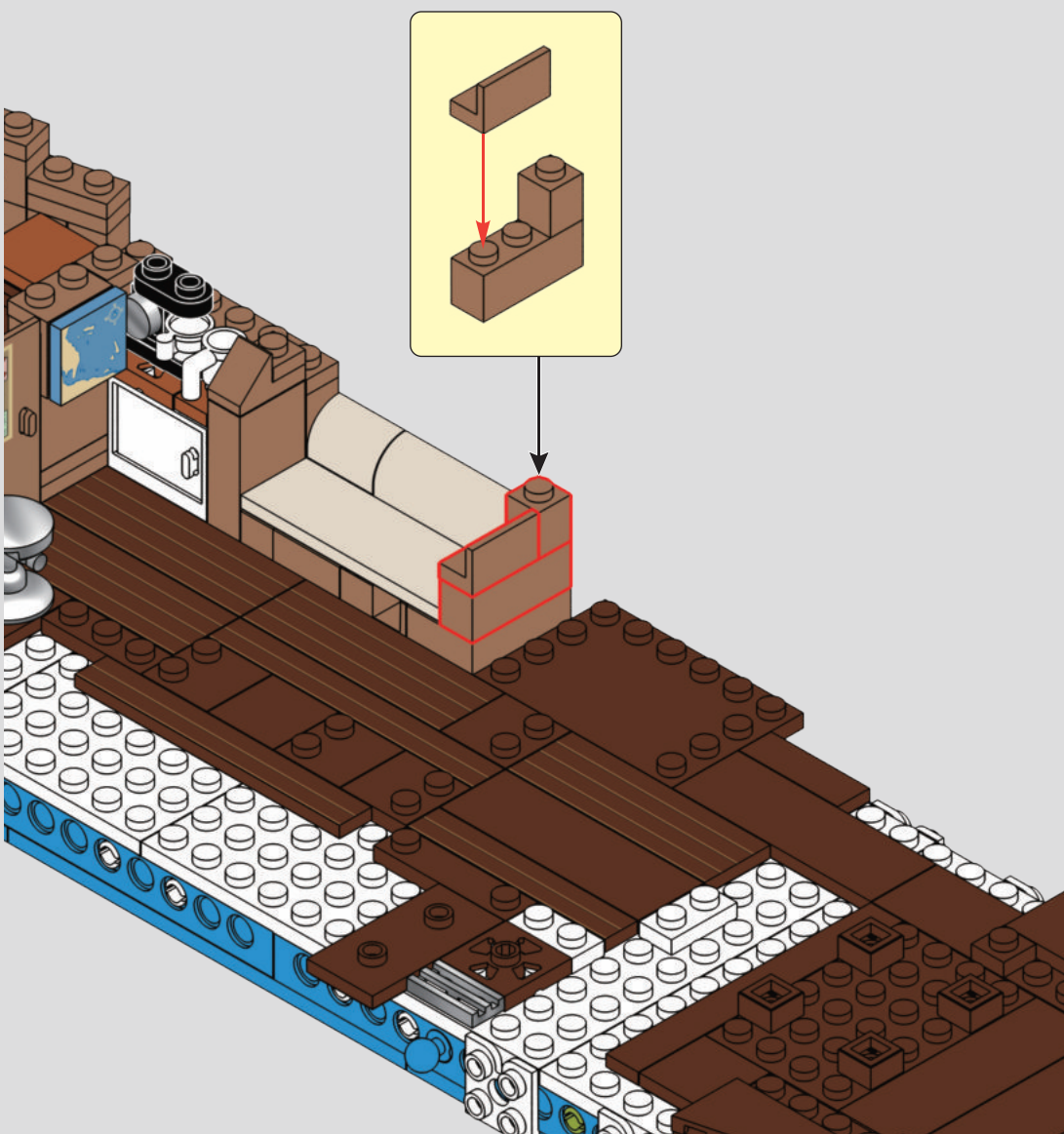

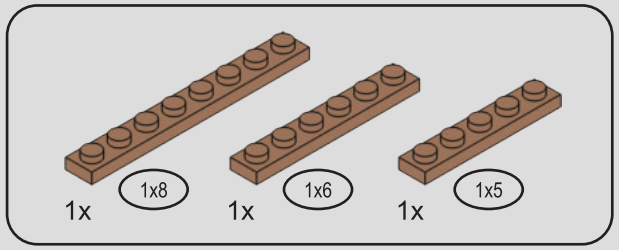

87

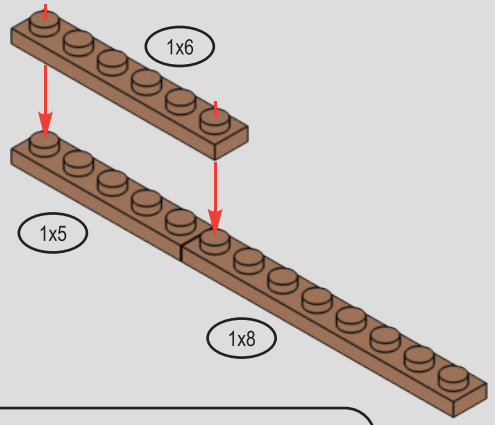

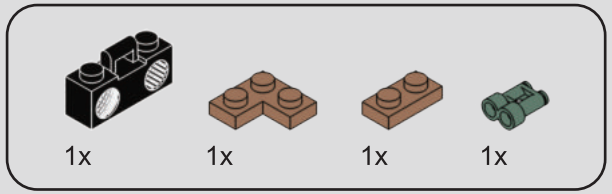

88

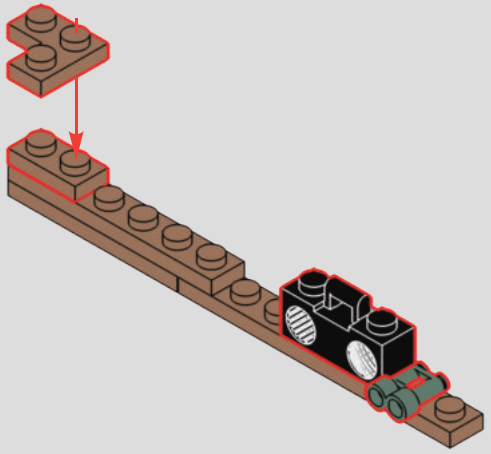

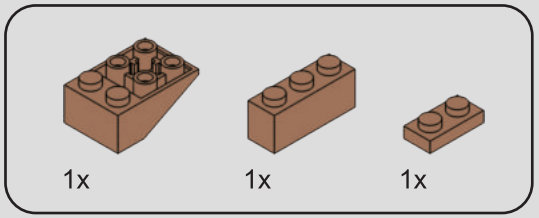

89

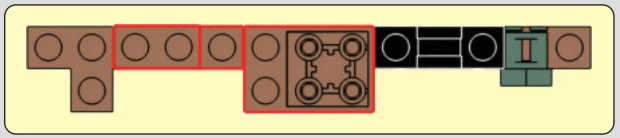

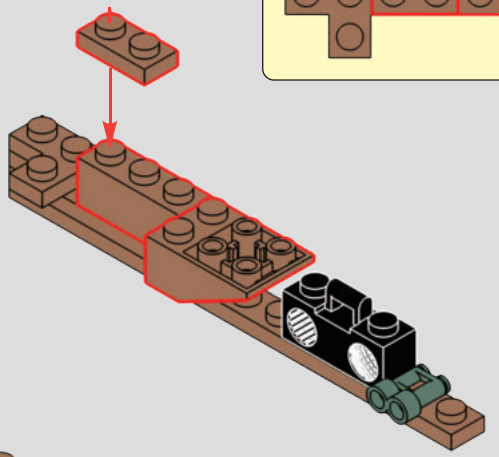

90



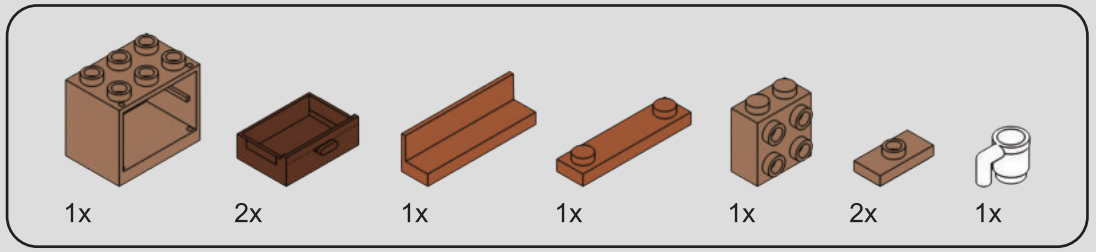

91

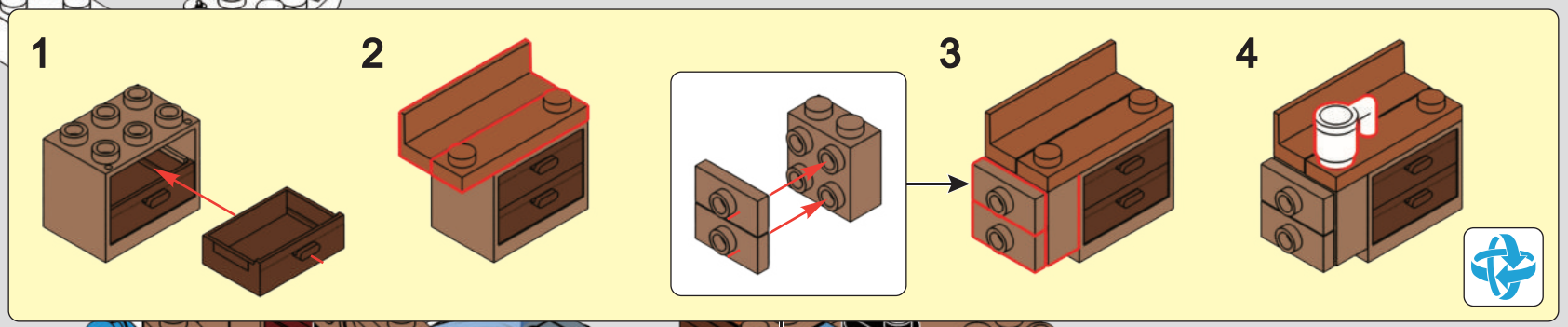

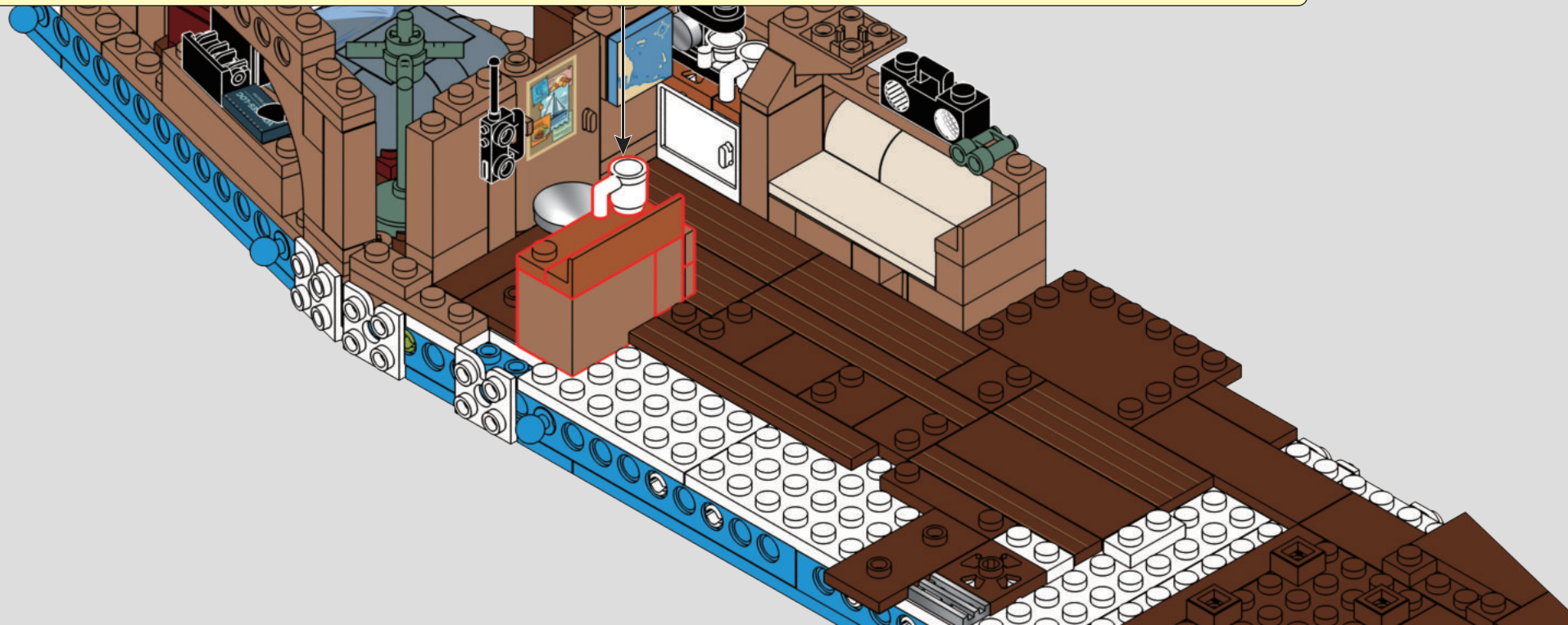

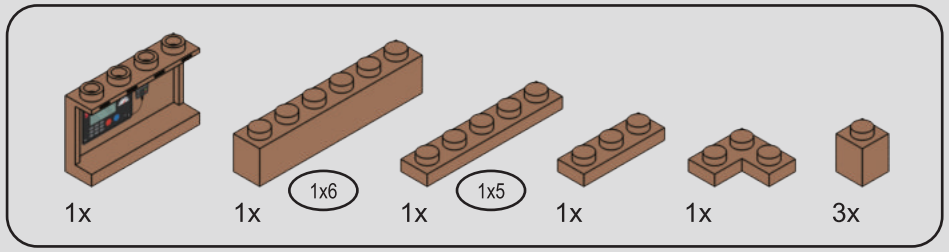

92

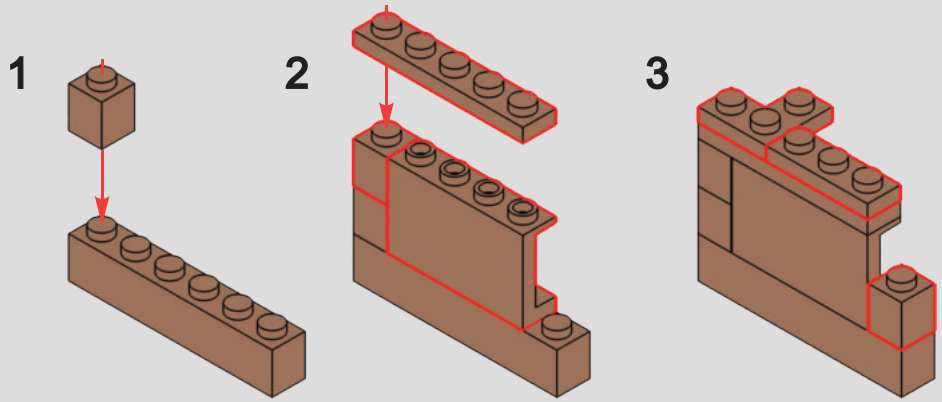

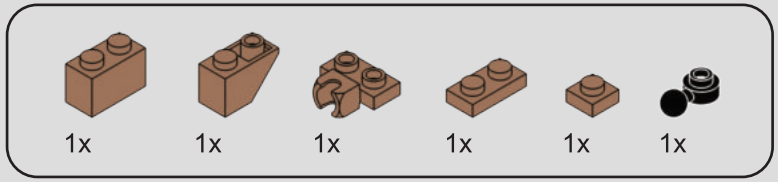

93

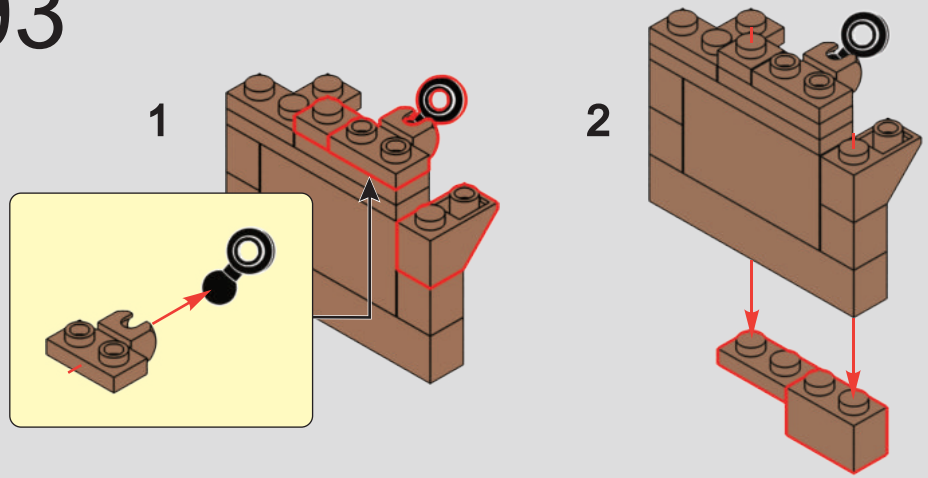

94

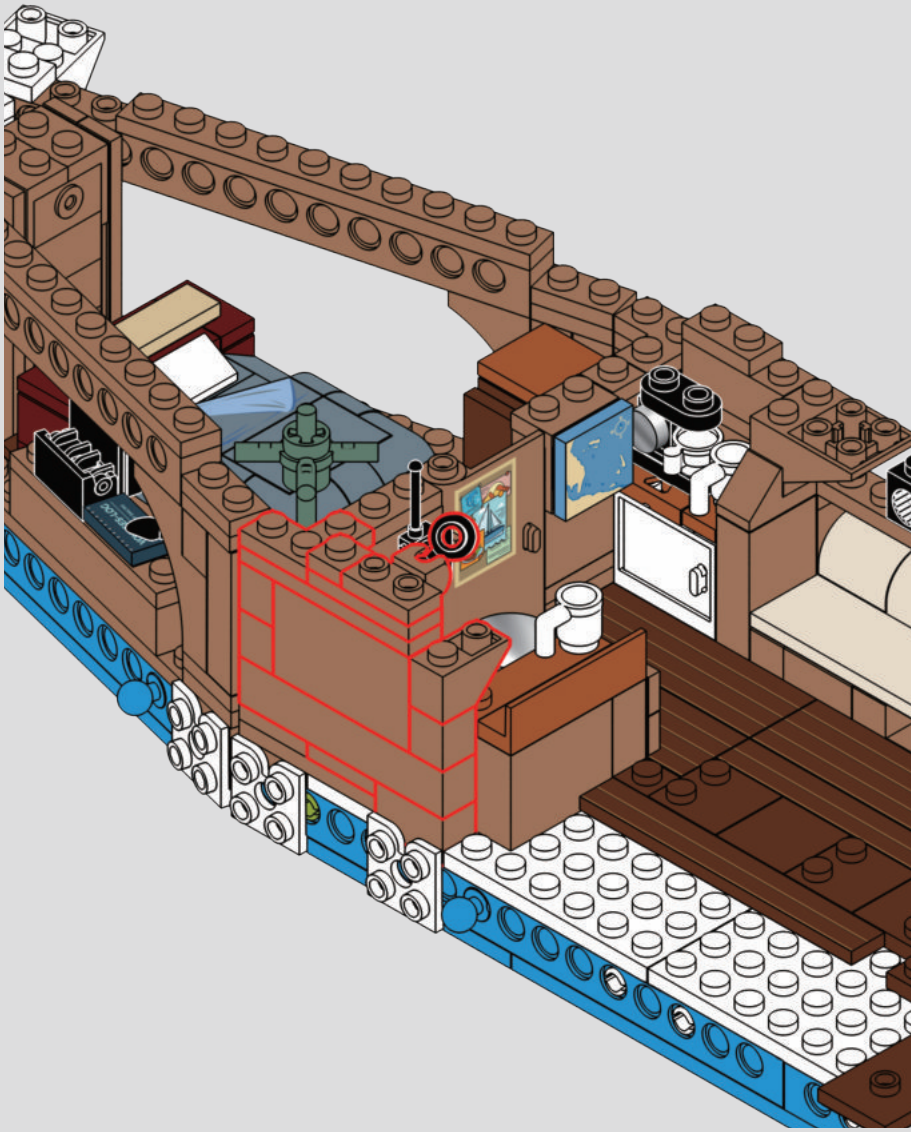

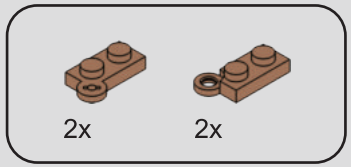

95

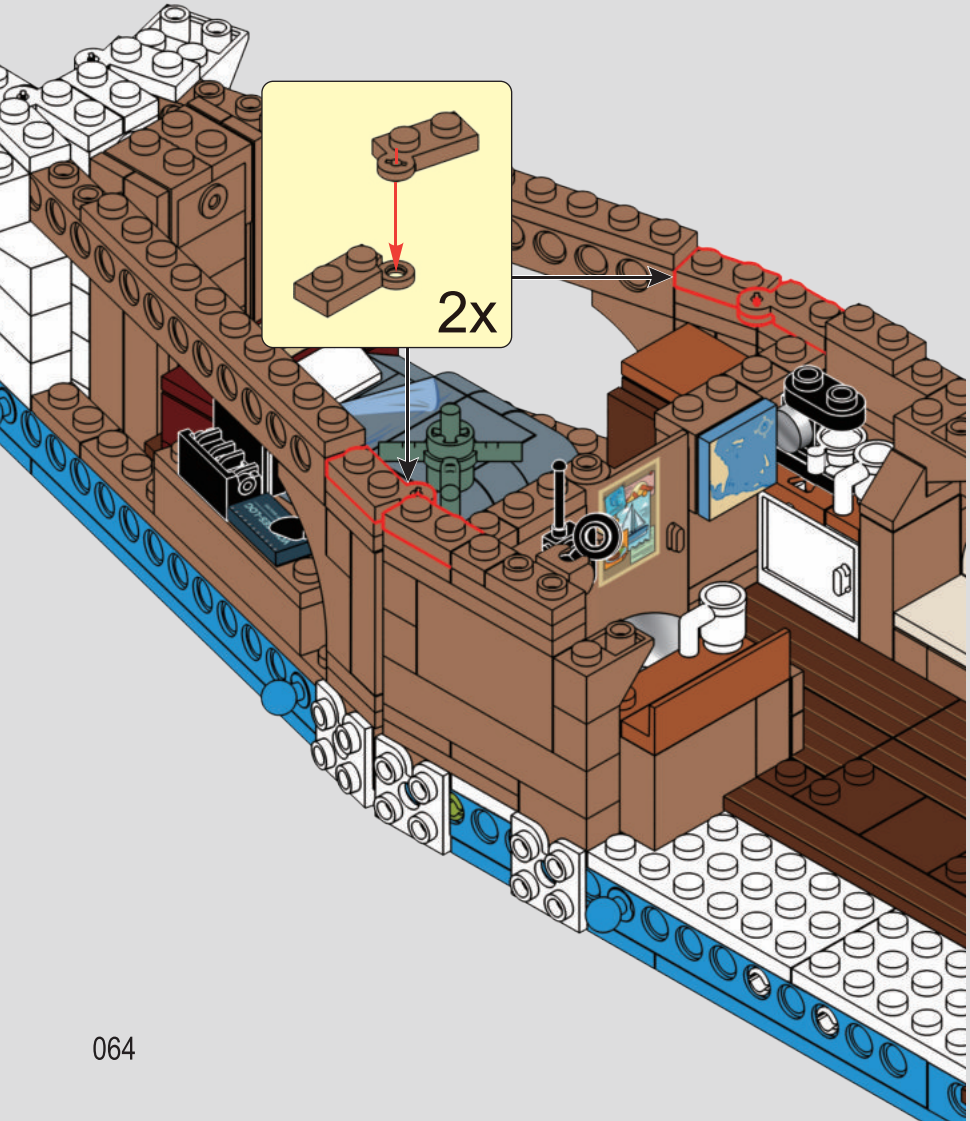

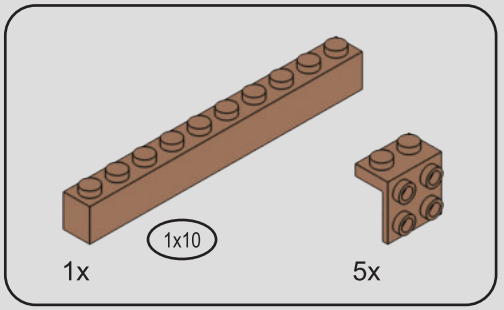

96

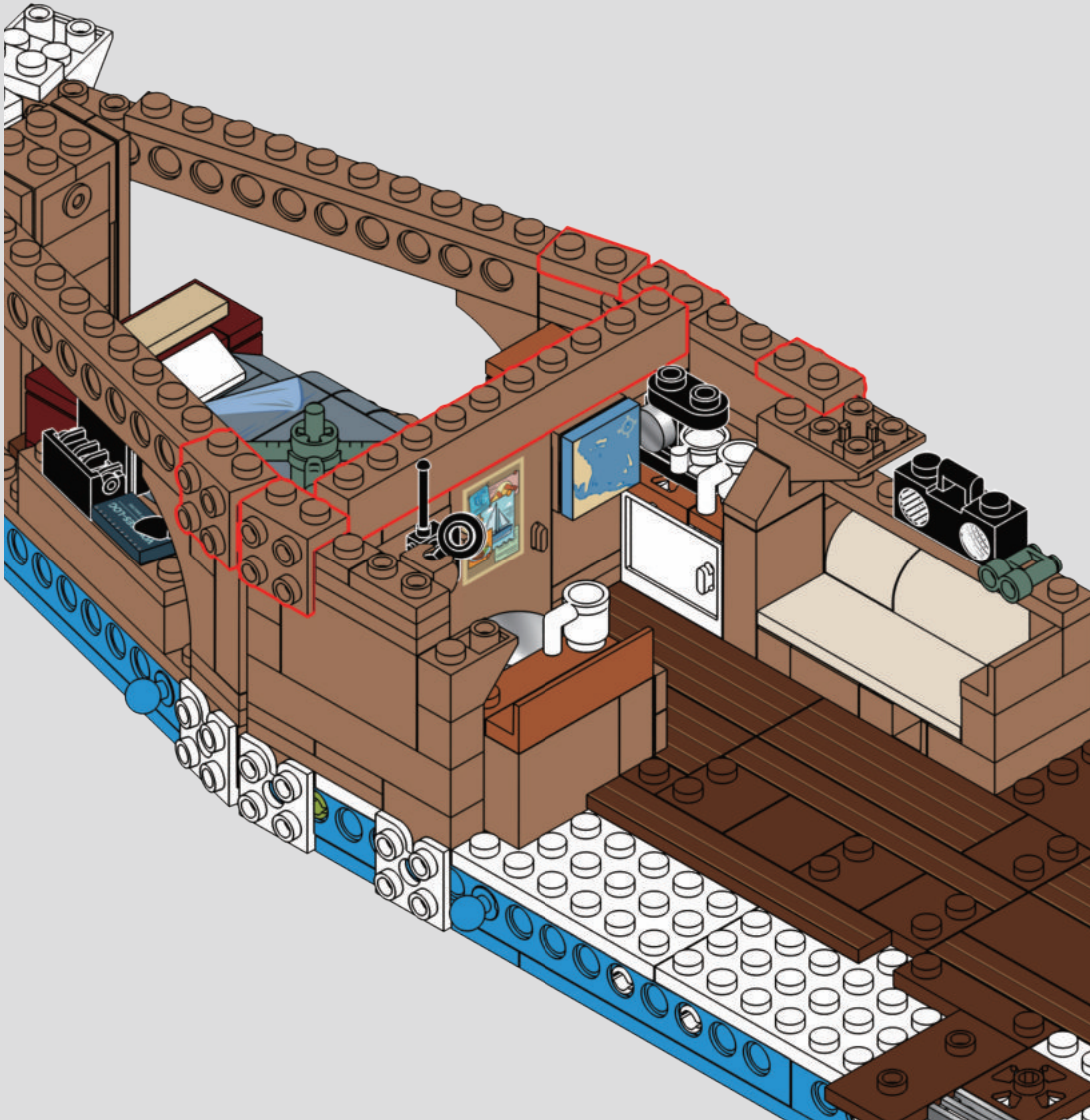

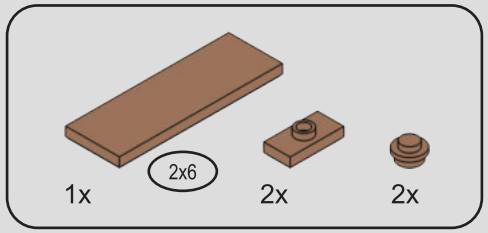

97

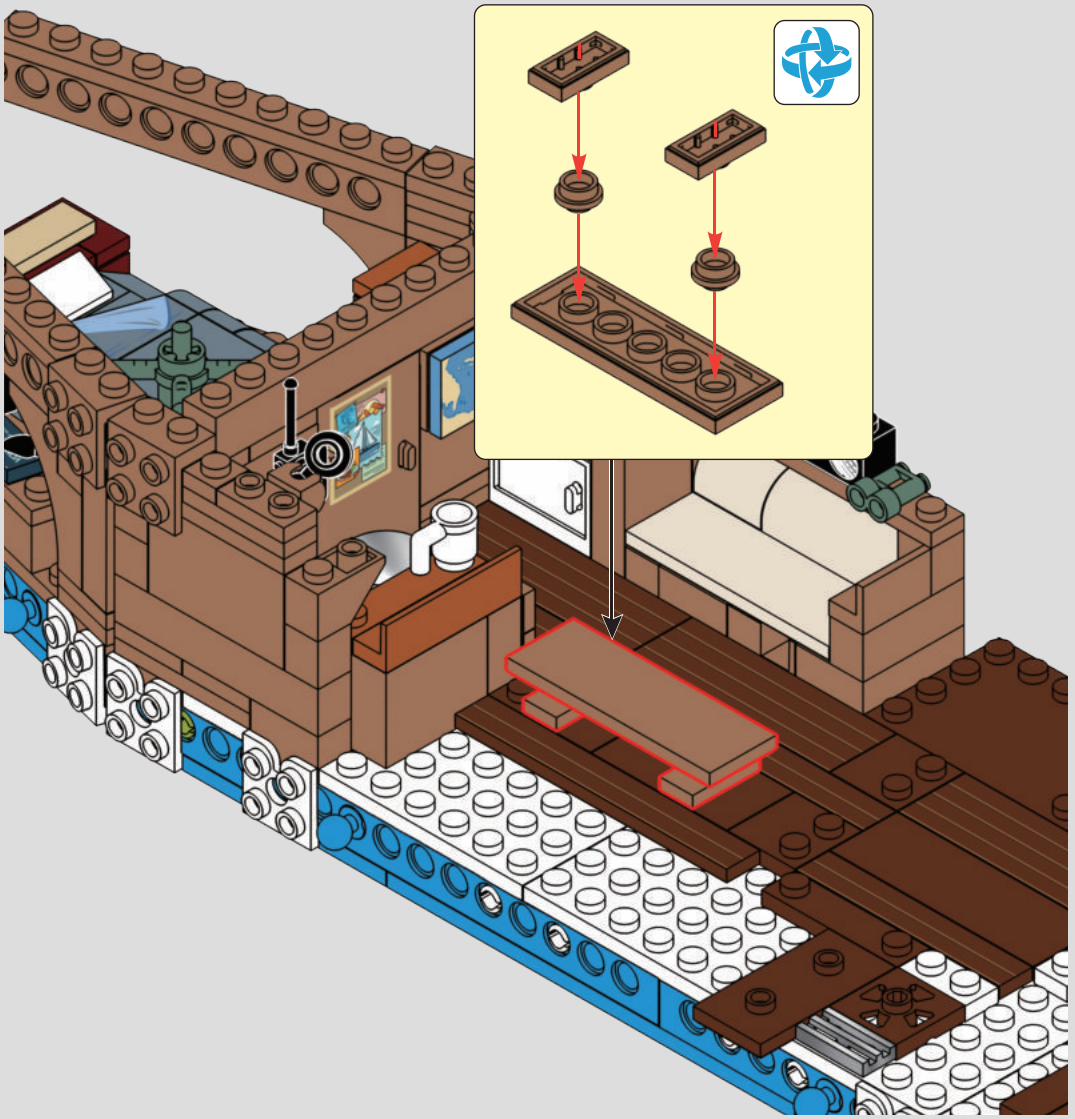

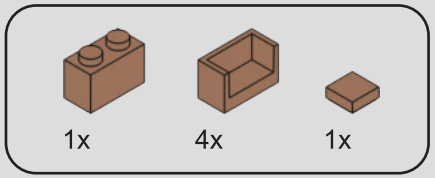

98

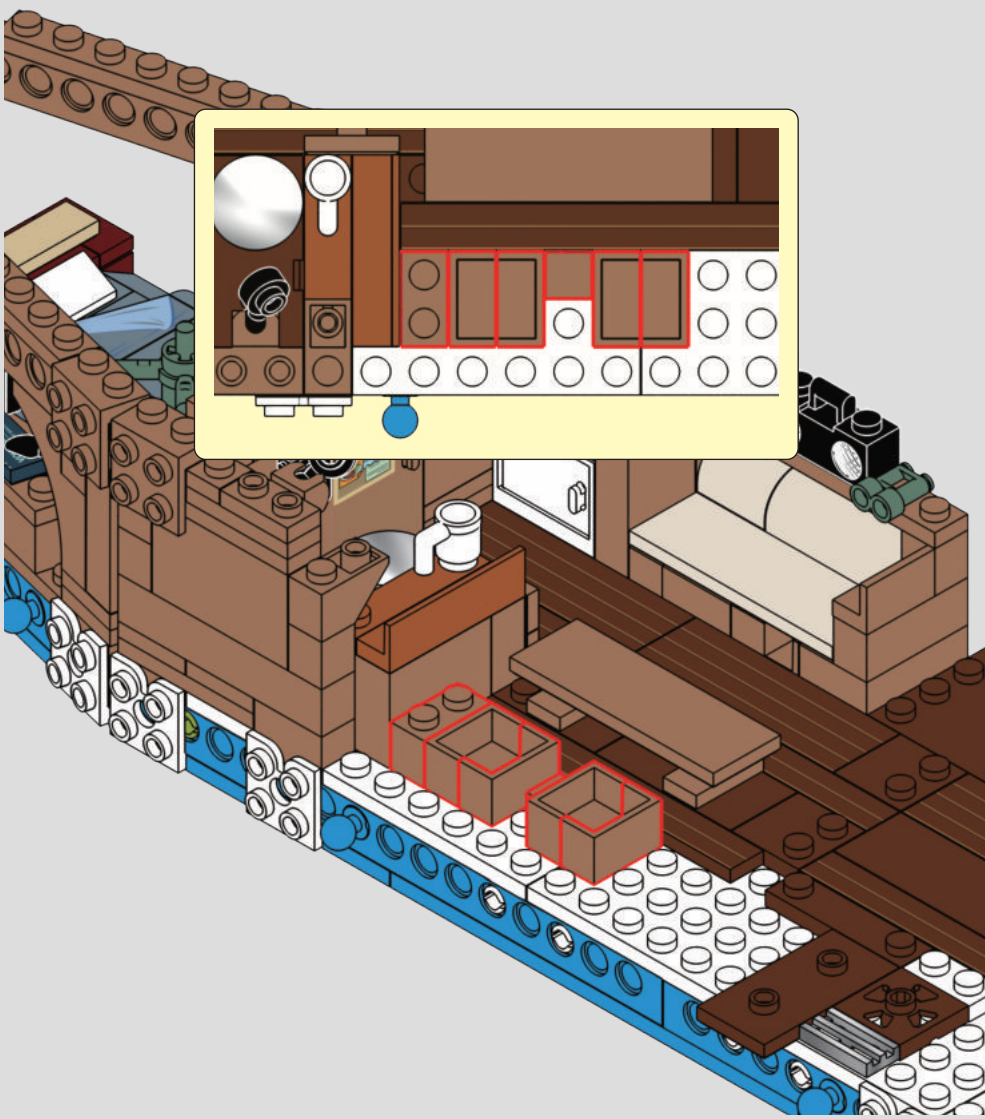

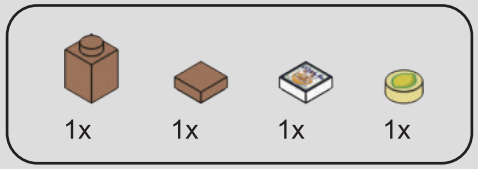

99

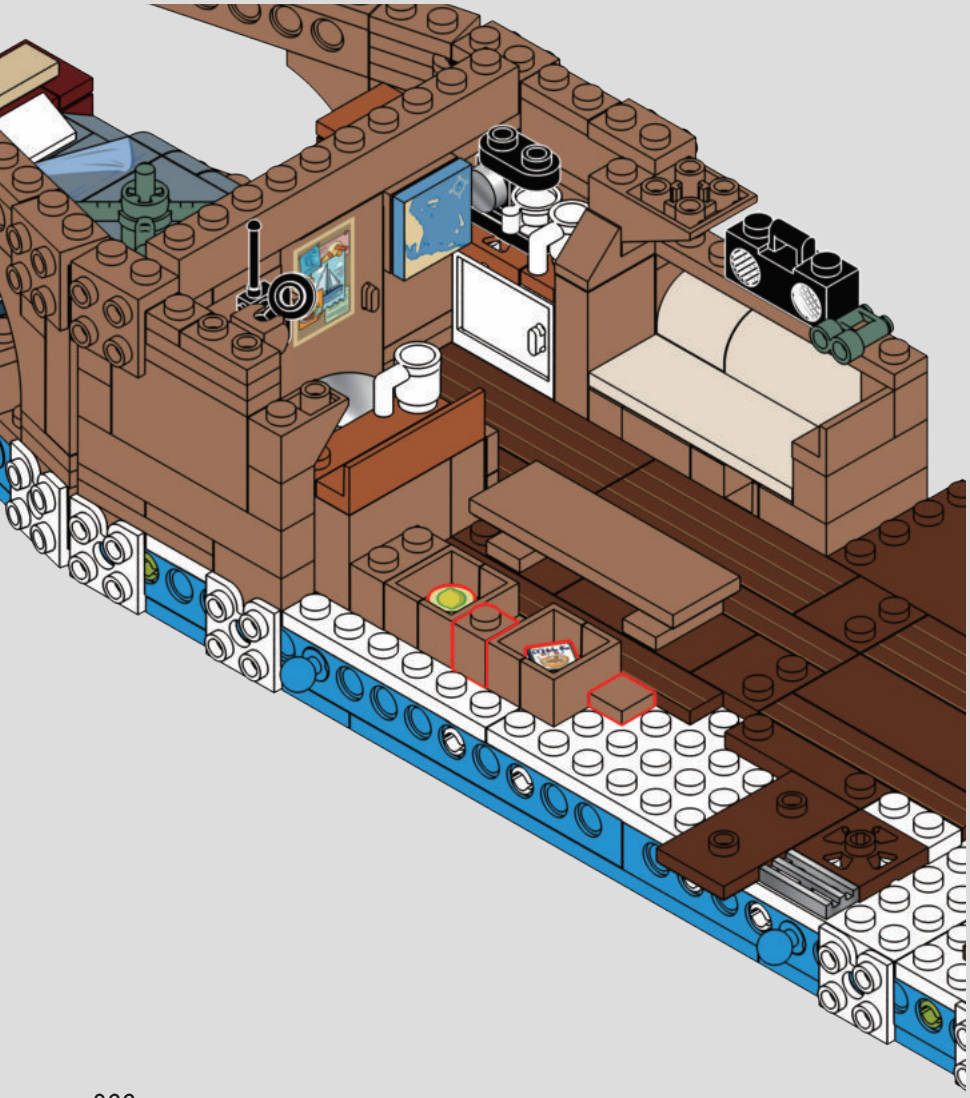

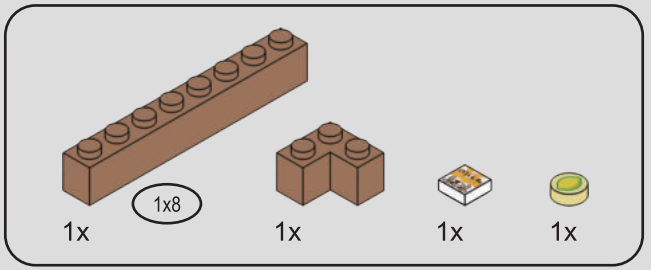

100

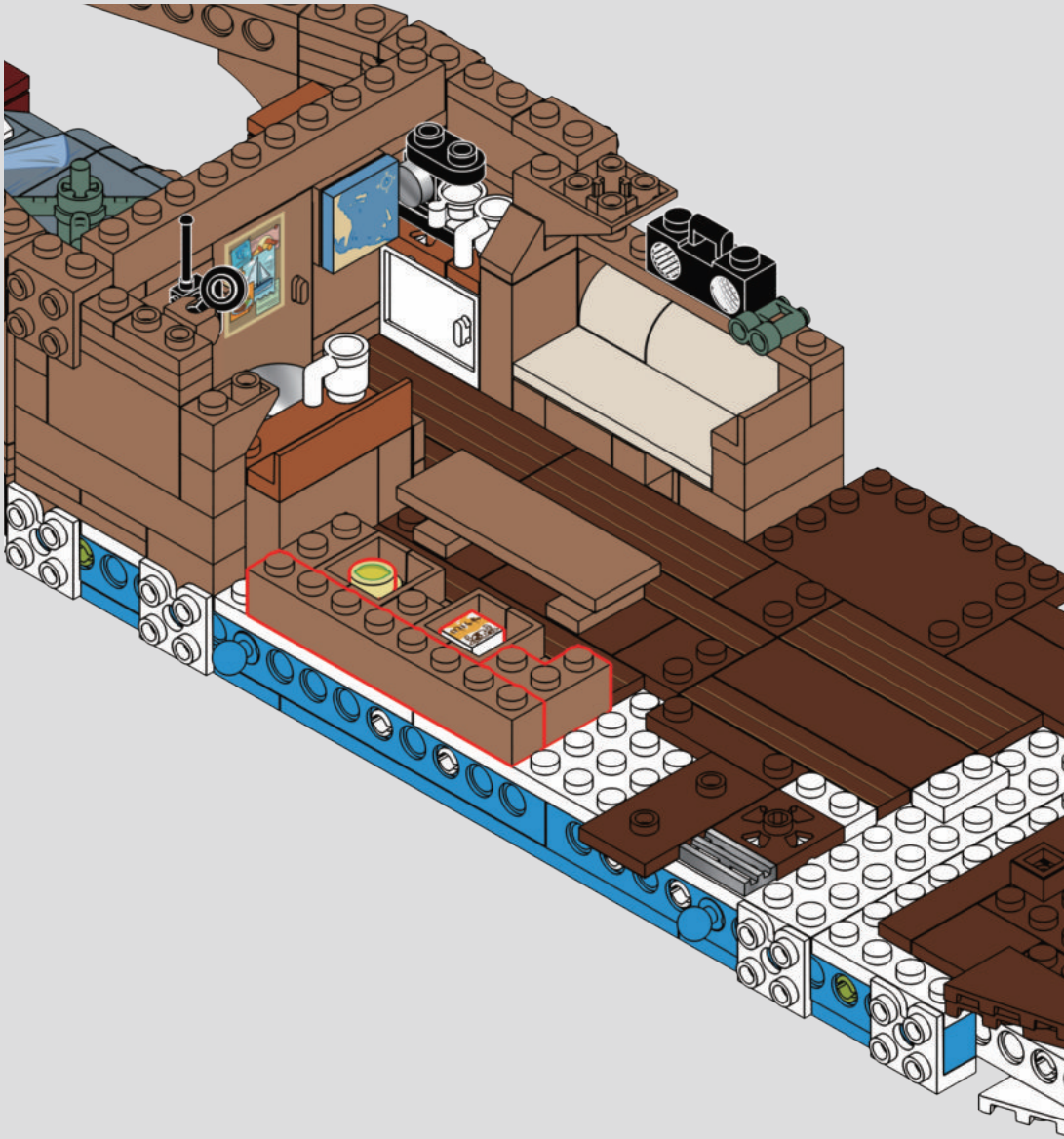

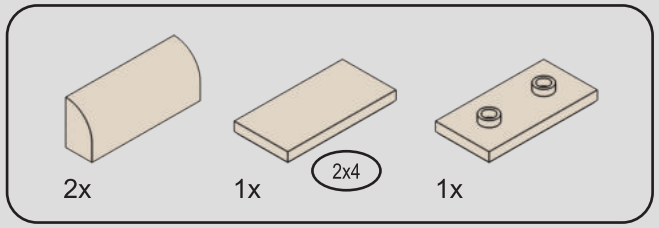

101

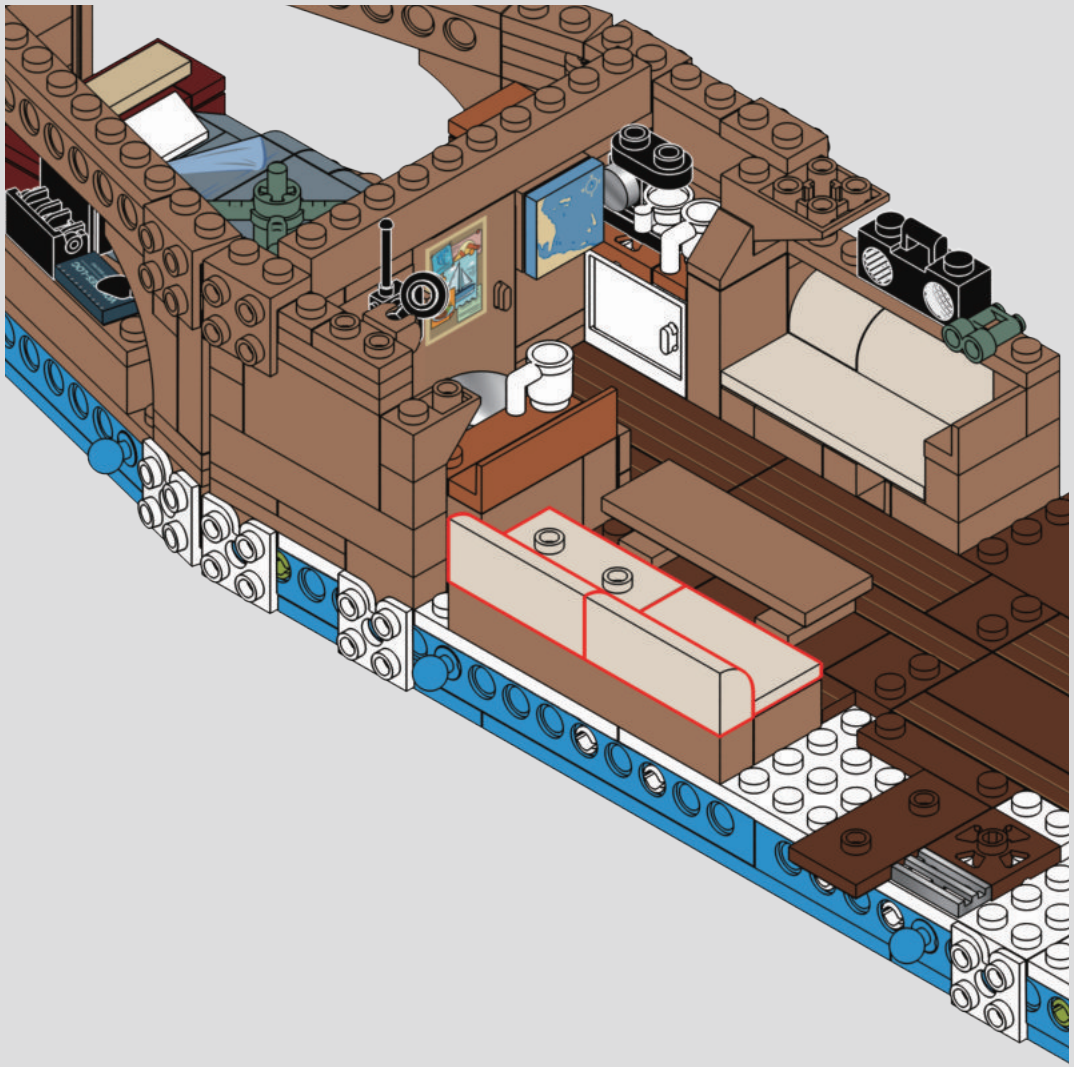

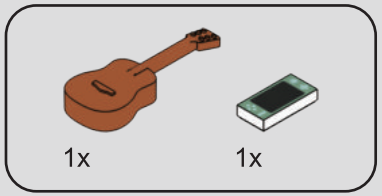

102

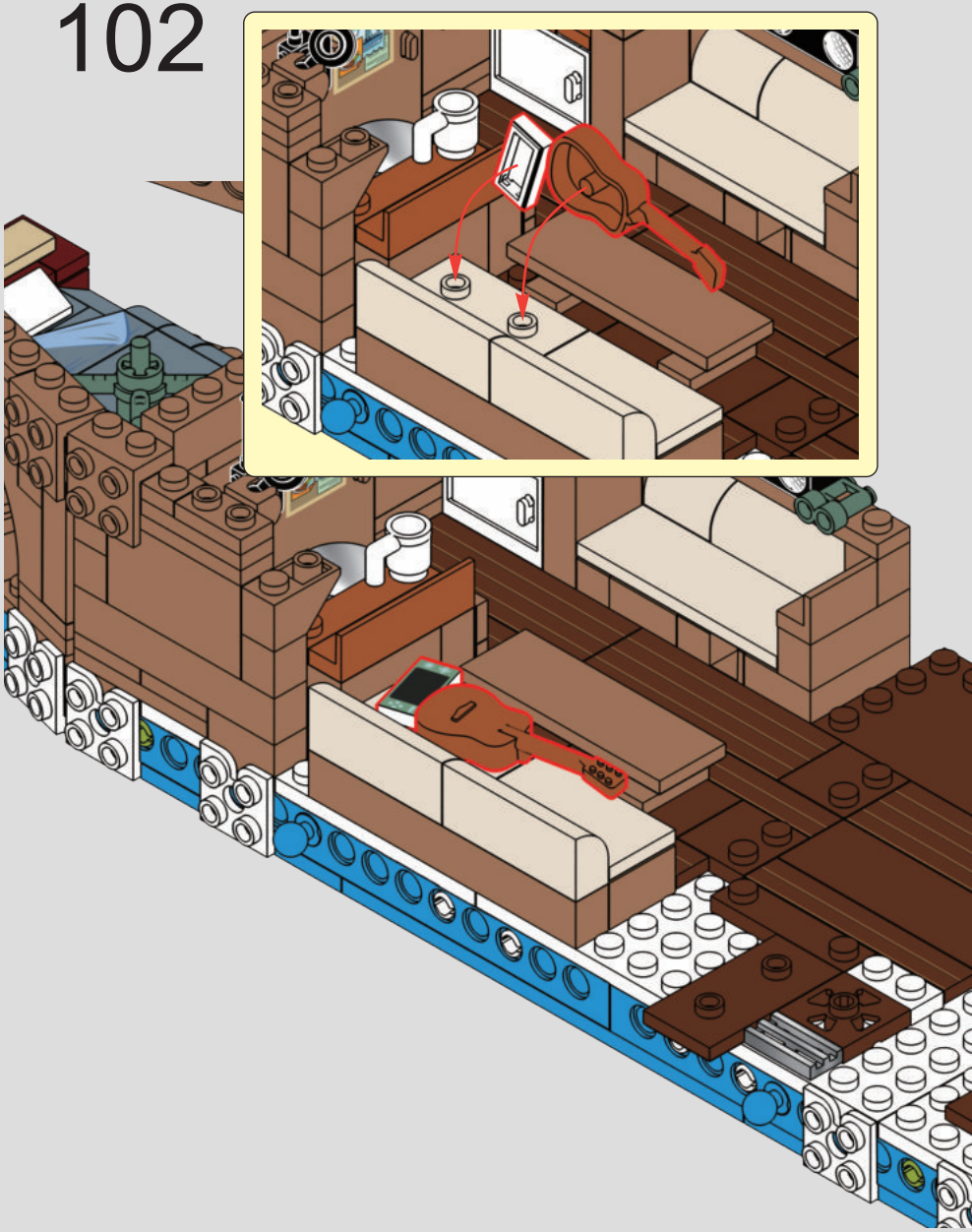

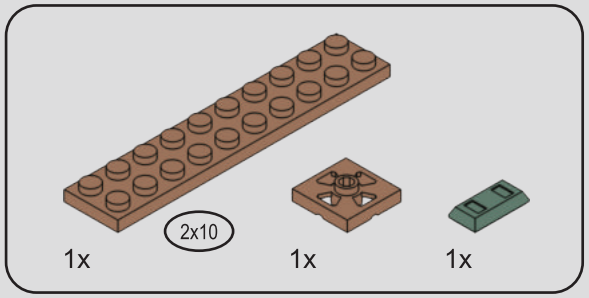

103

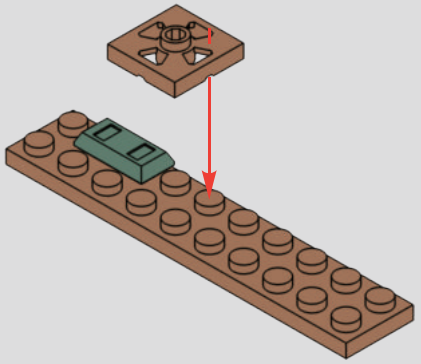



104

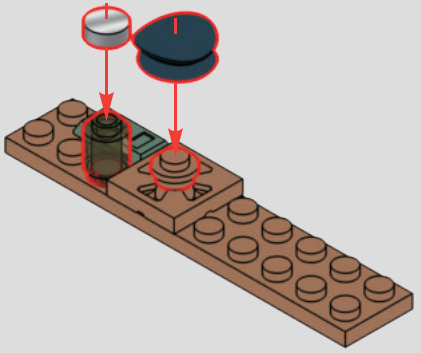

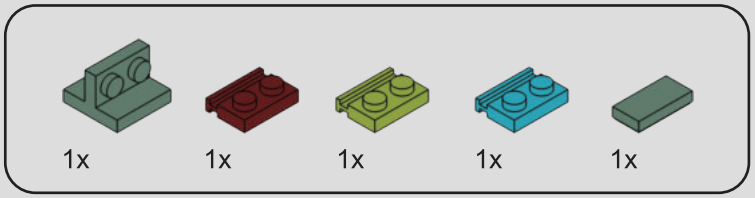

105

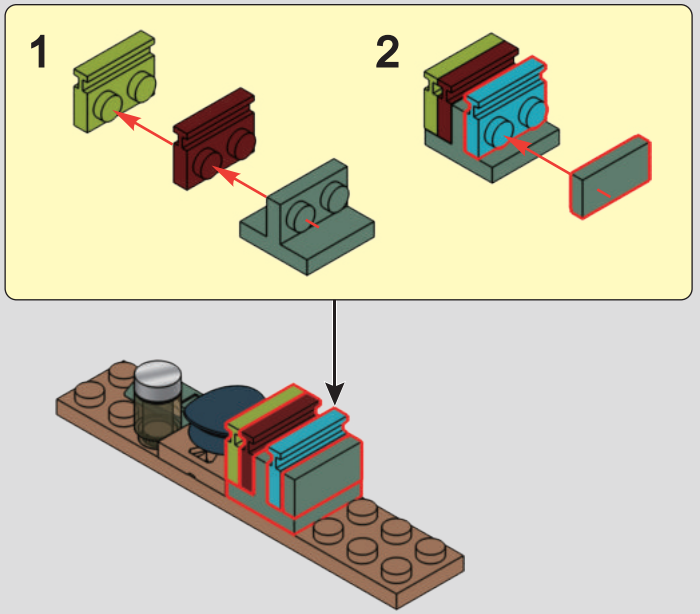

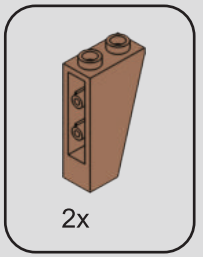

106

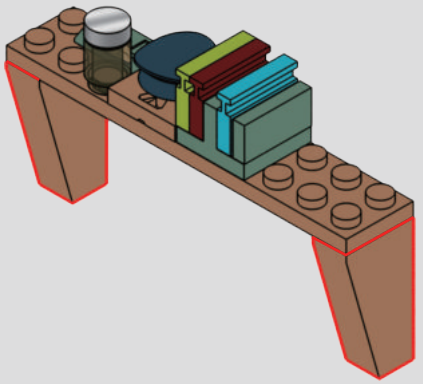

107

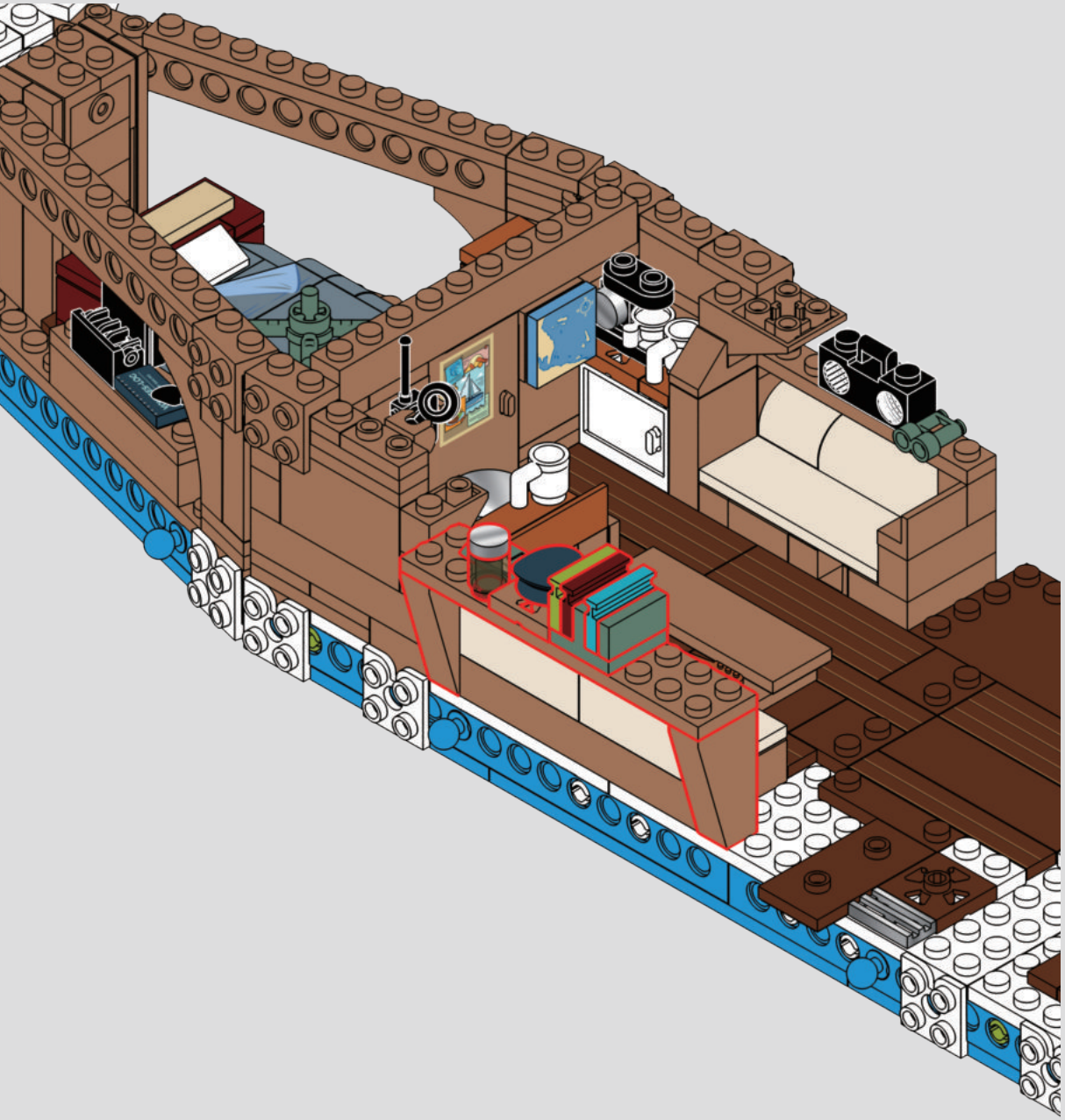

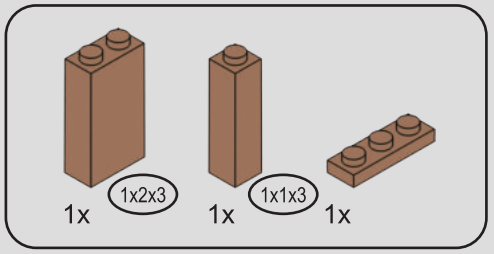

108

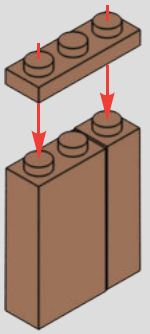



109

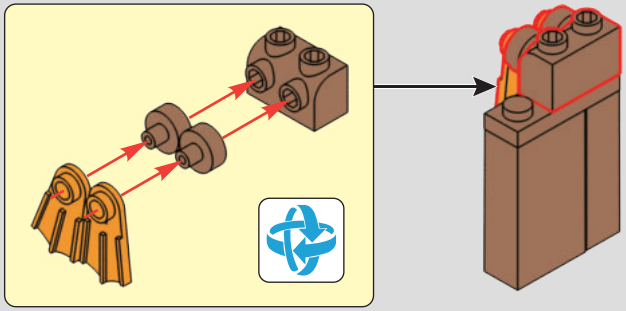

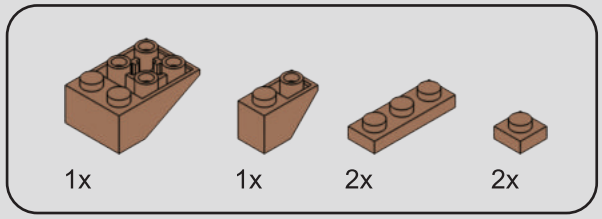

110

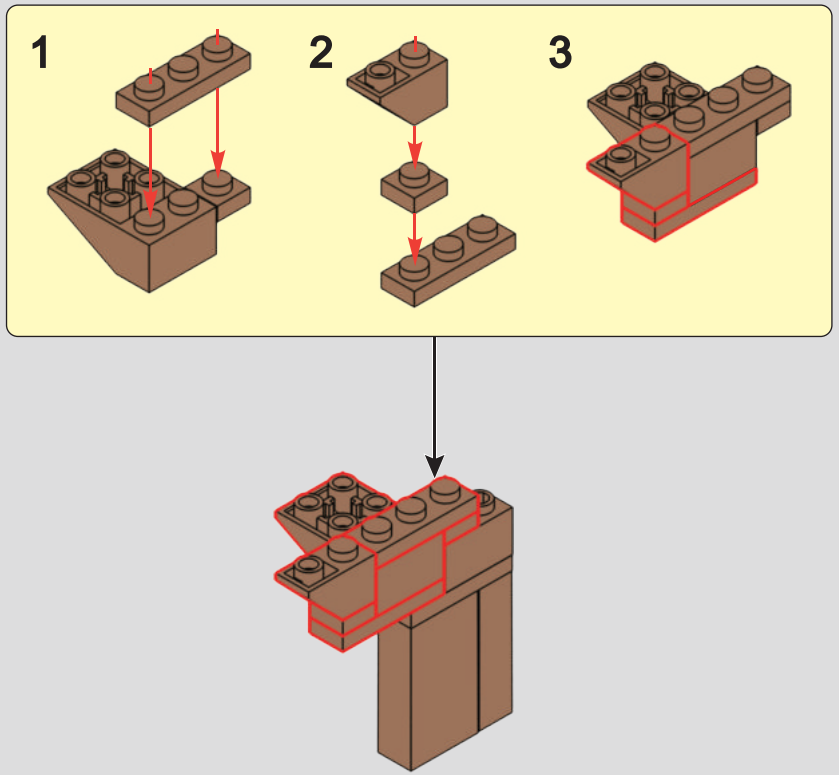

111

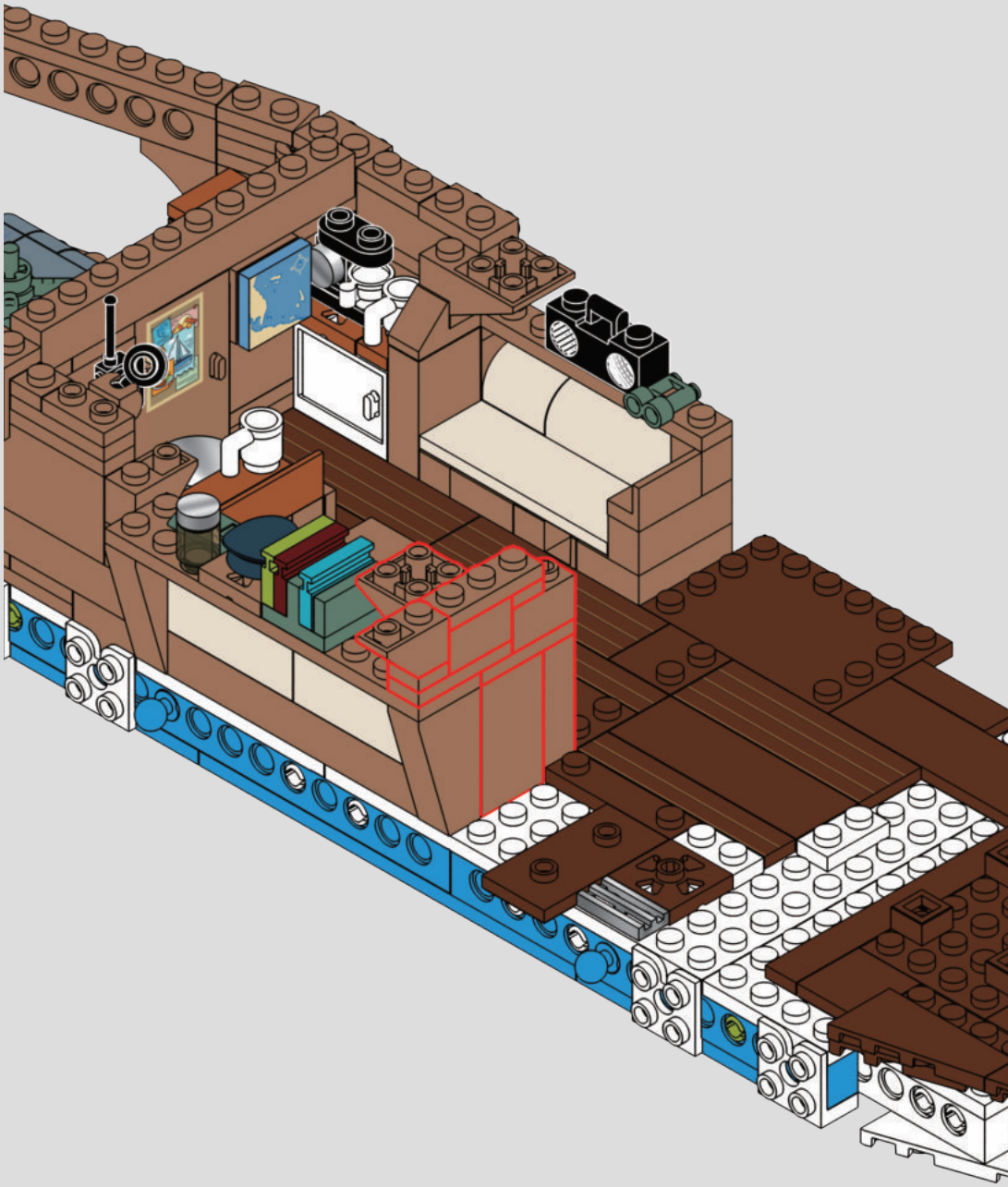

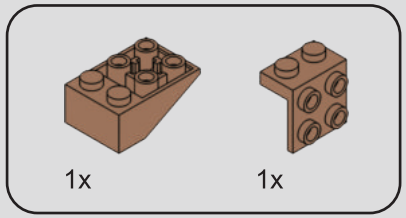

112

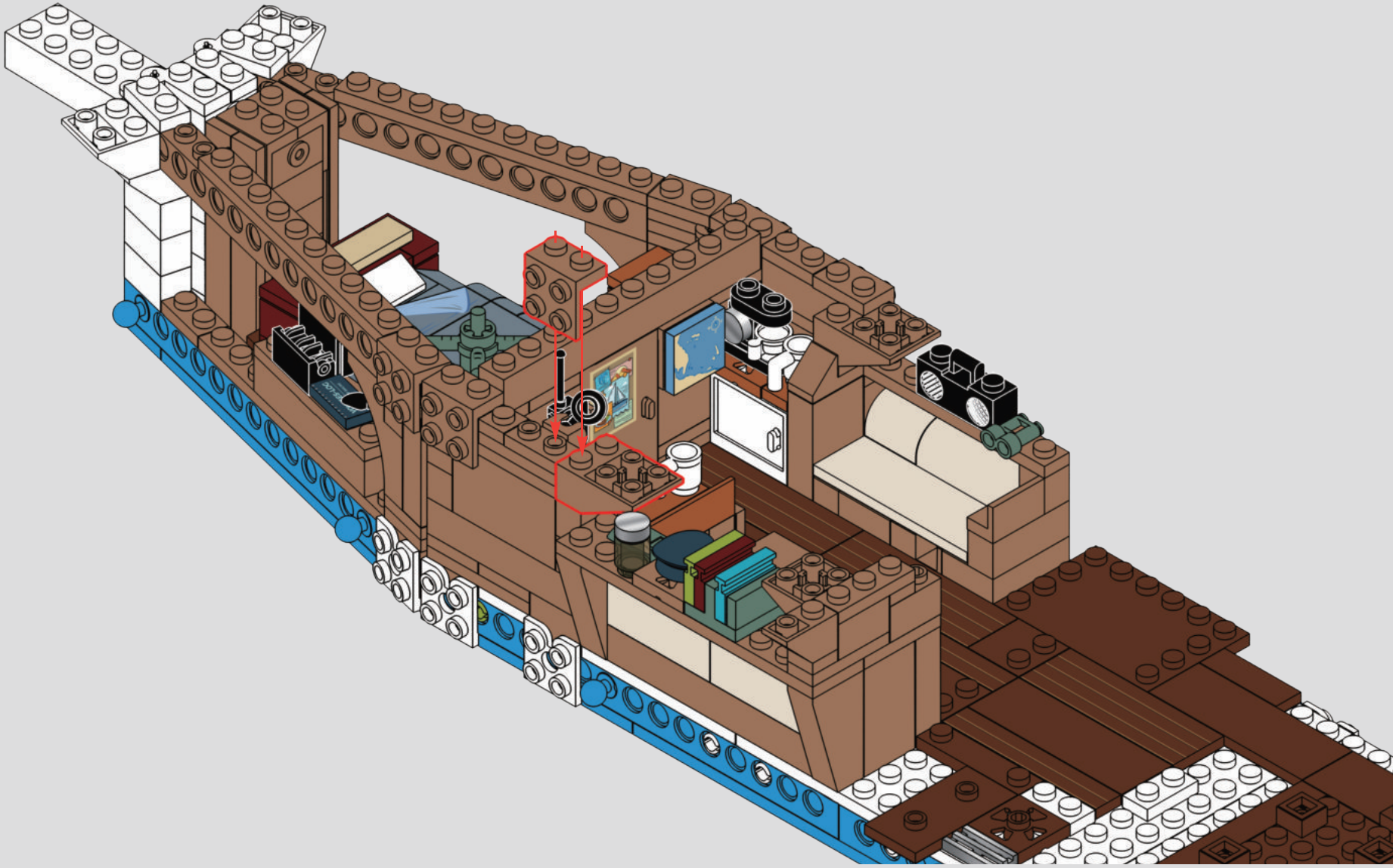

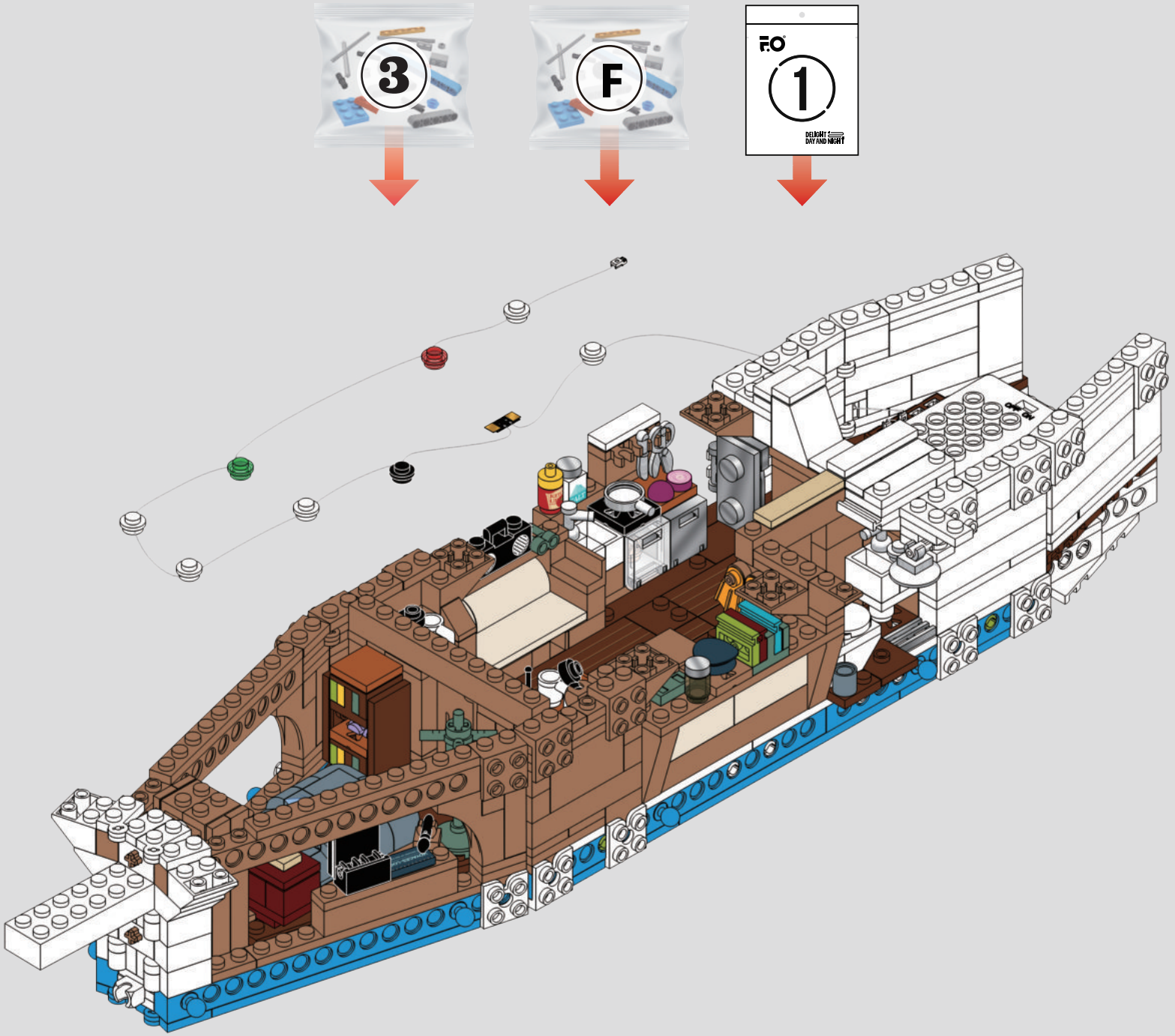
3
F
F.O
1
DELIGHT
DAY AND NIGHT

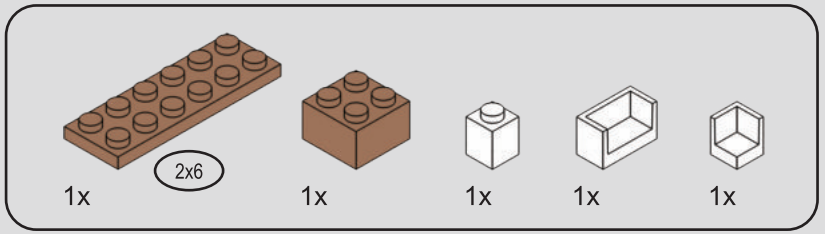

113

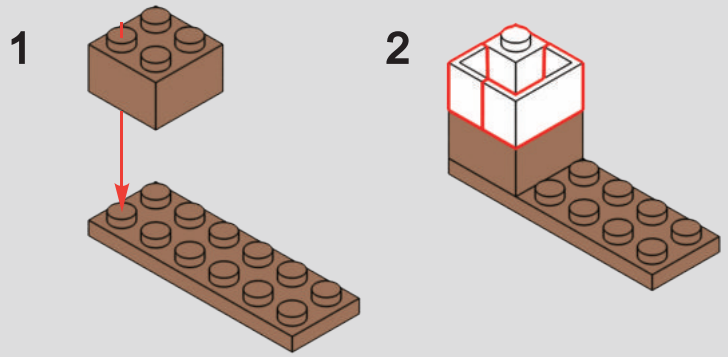

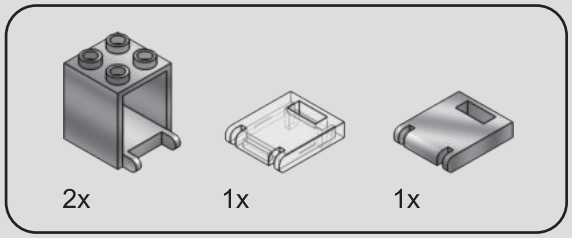

114

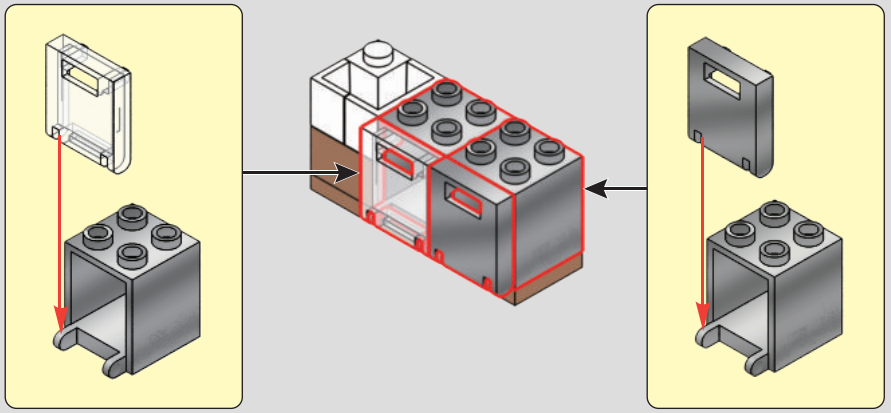

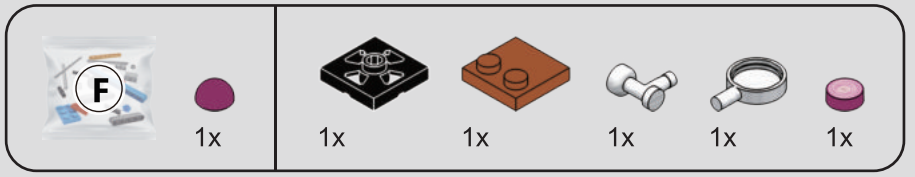

115

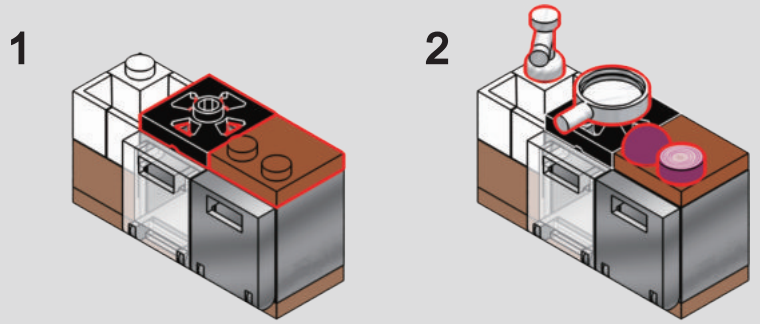

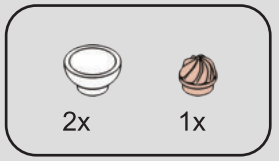

116

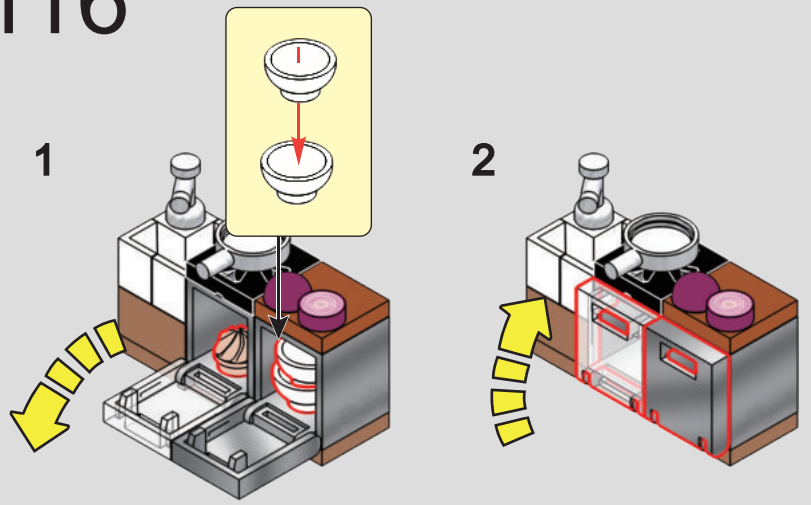

117

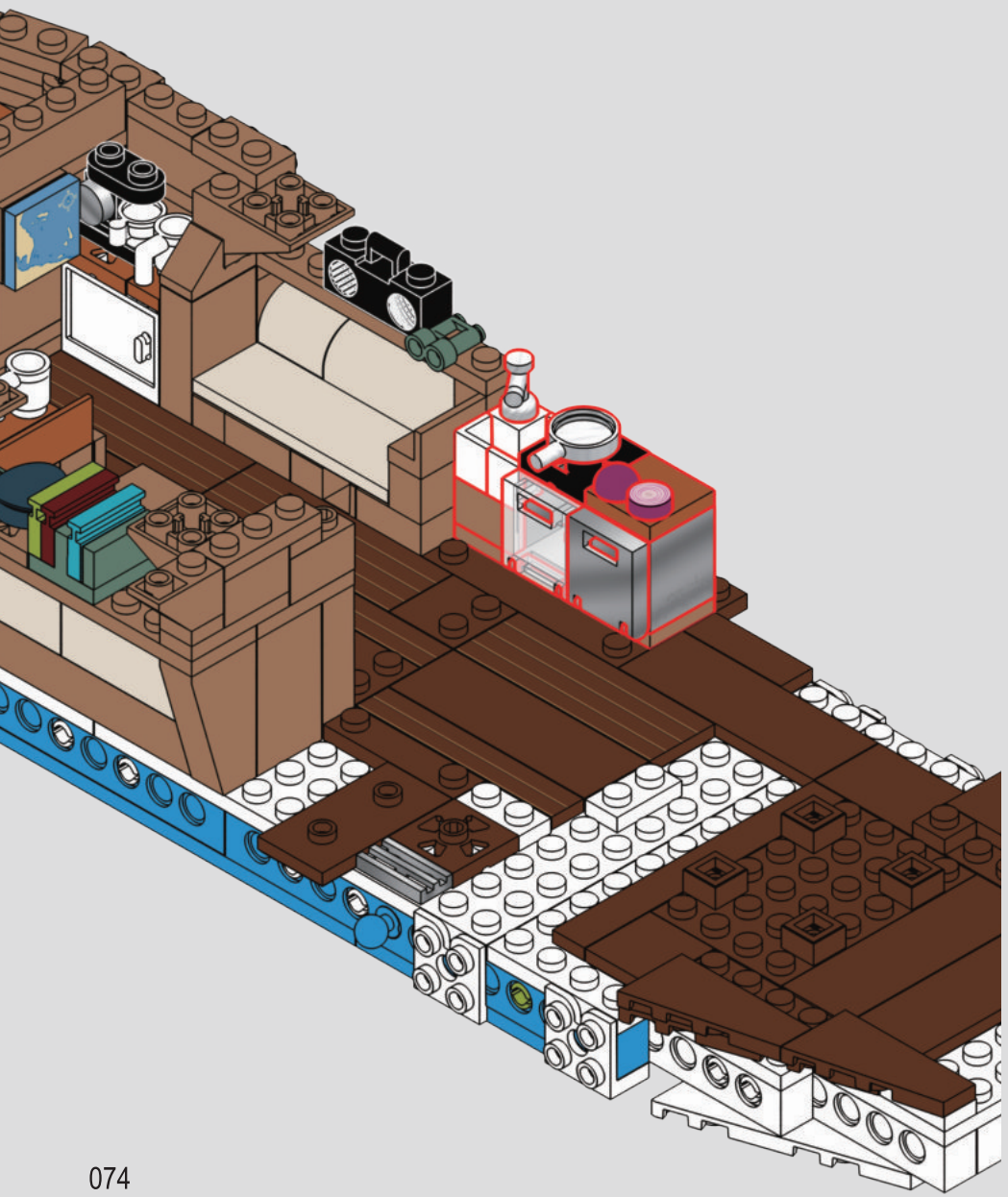

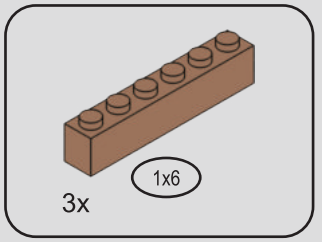

118

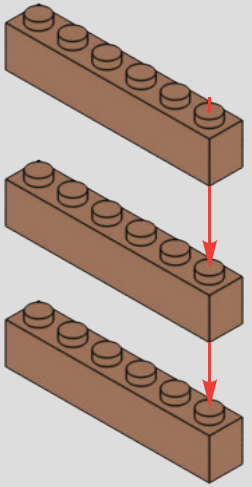

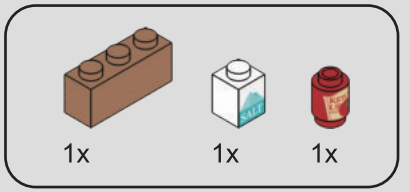

119

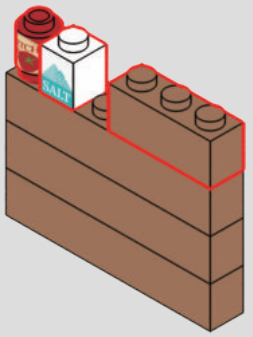

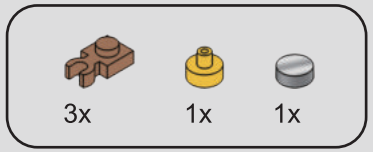

120

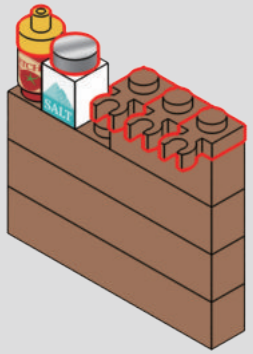

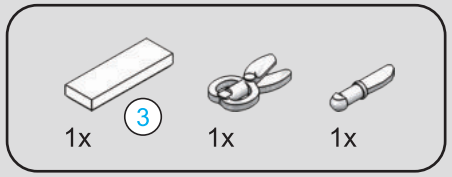

121

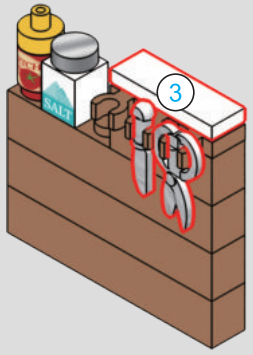

122

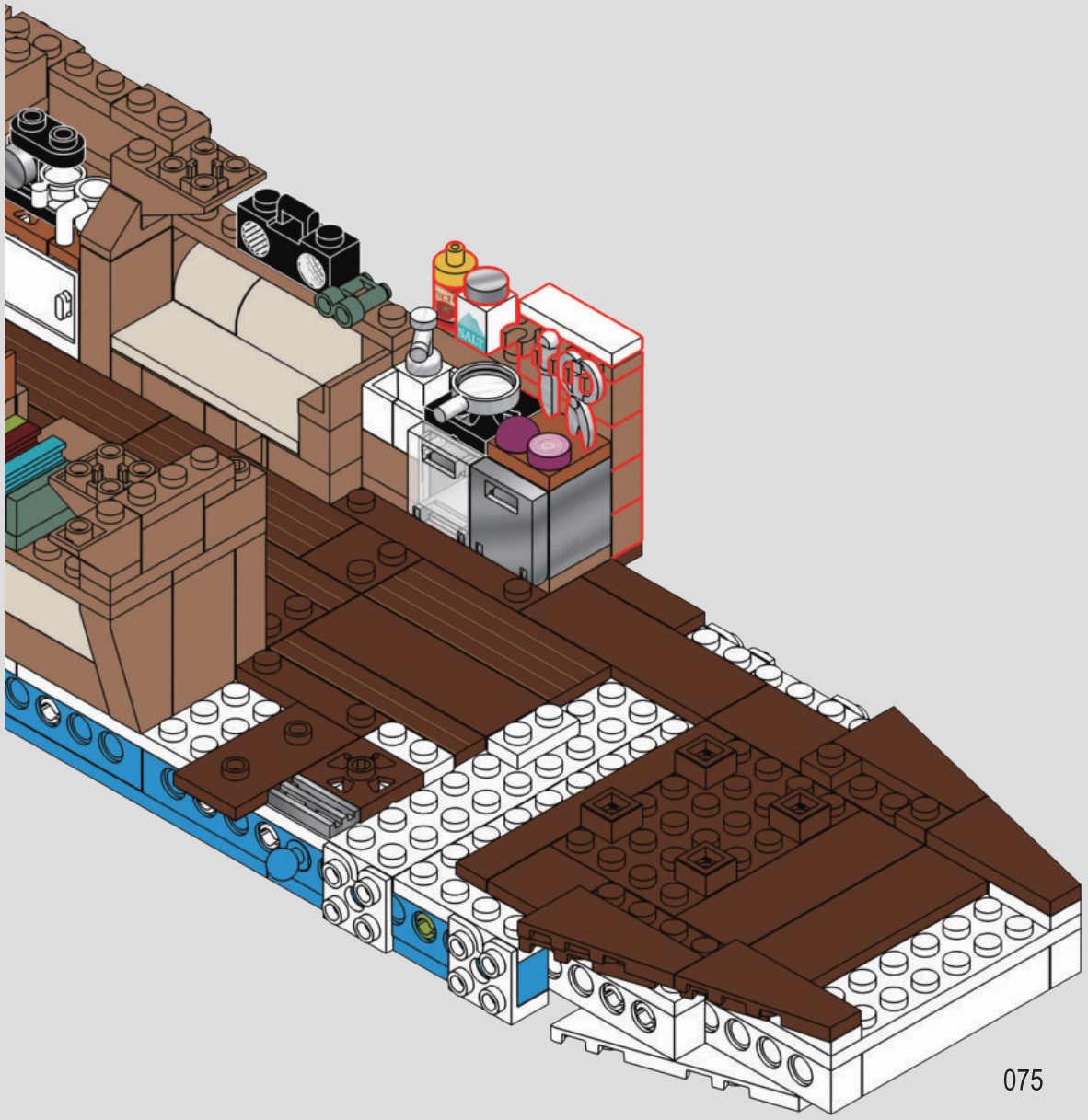

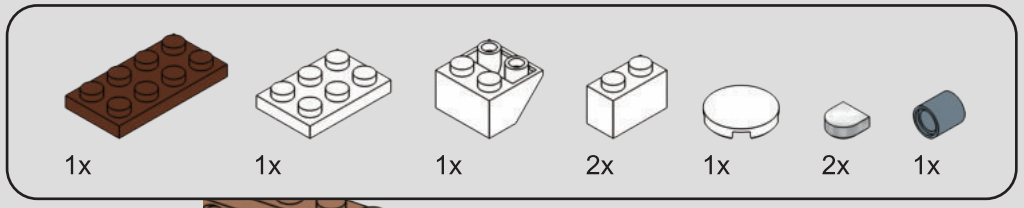

123

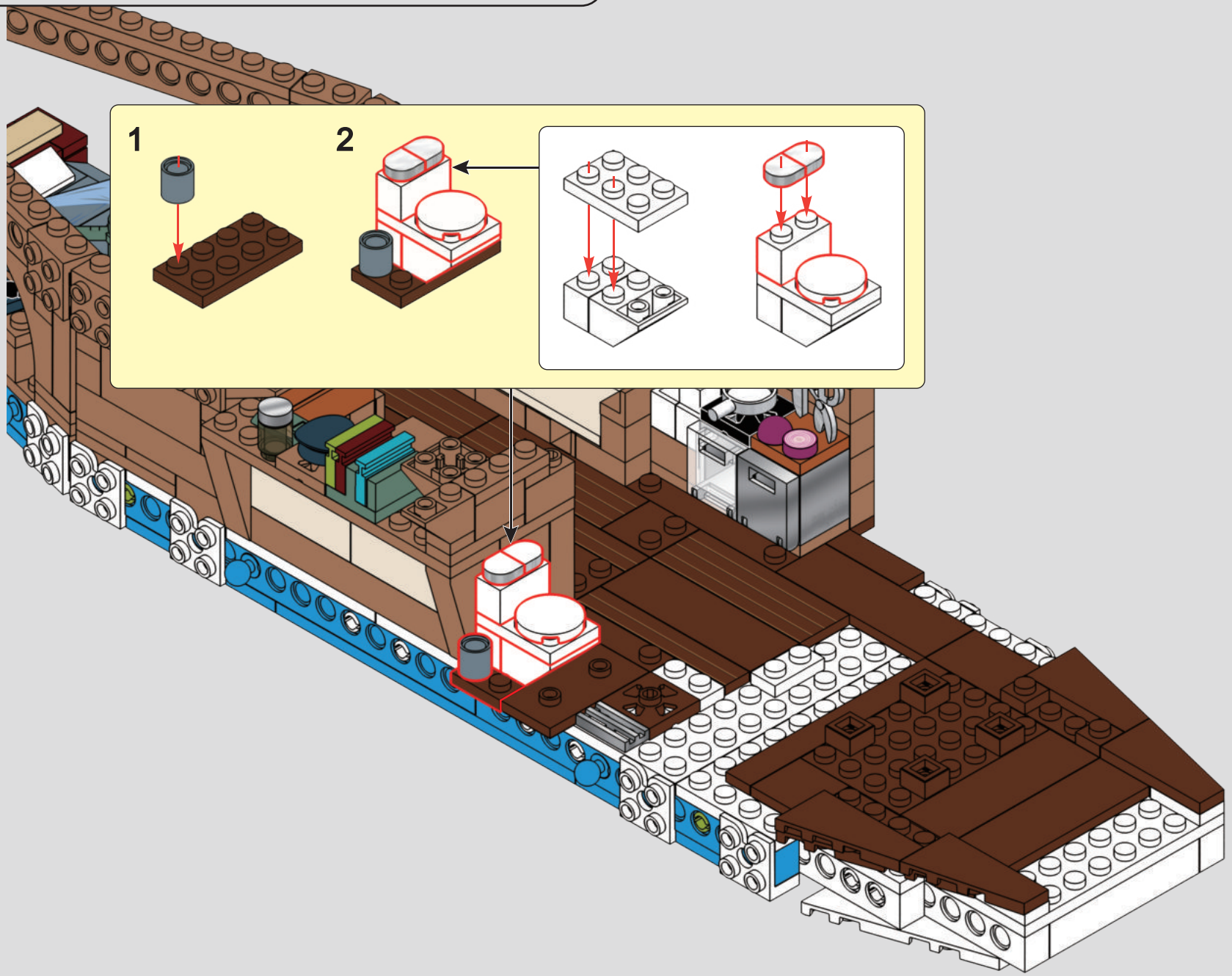

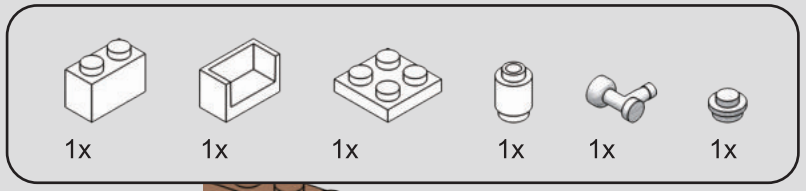

124

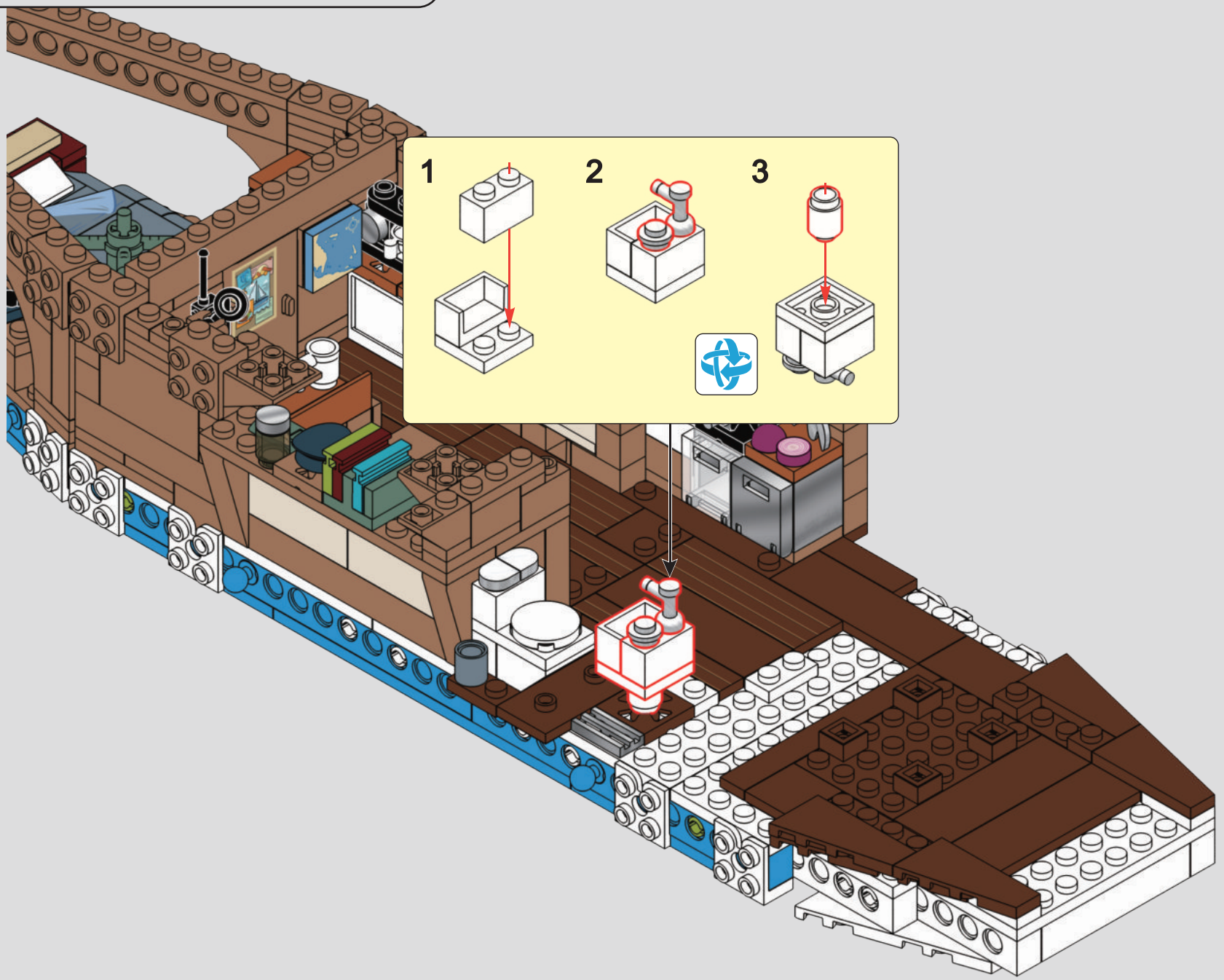

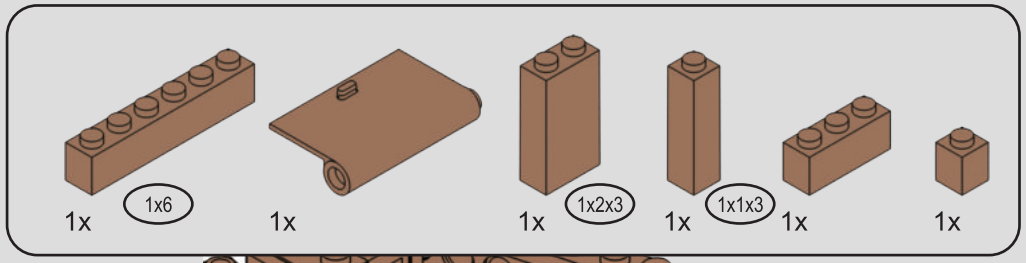

125

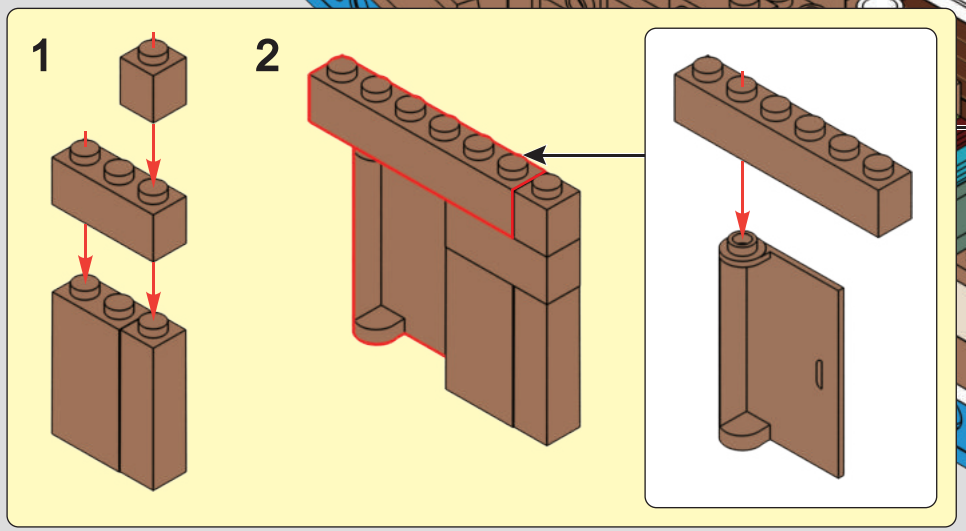

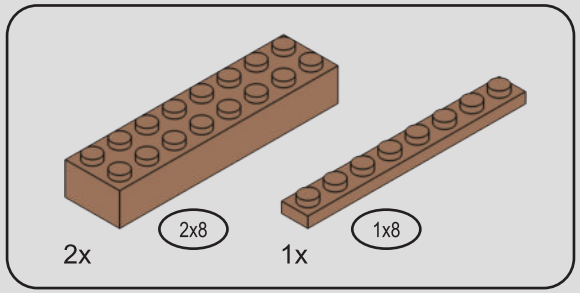

126

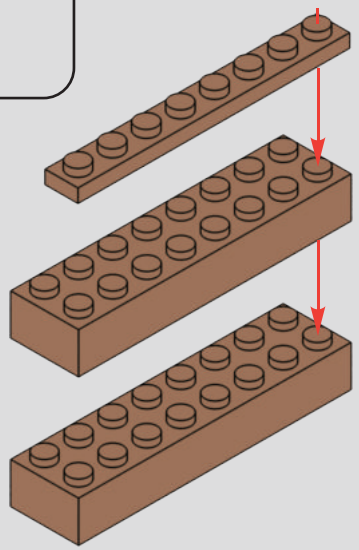

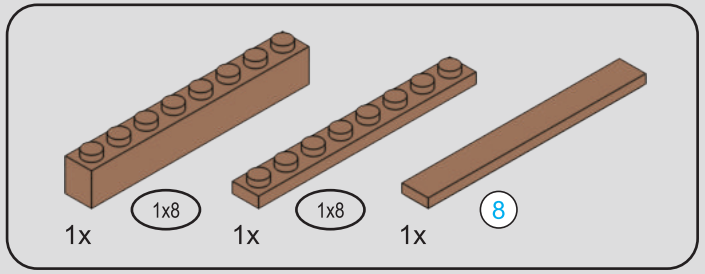

127

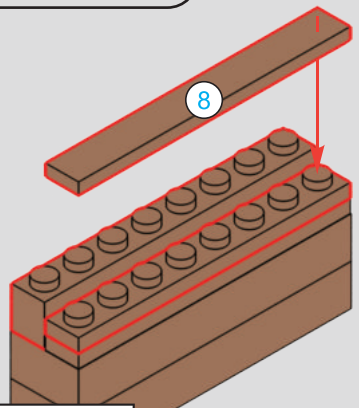



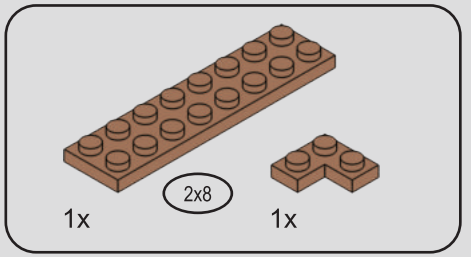

128

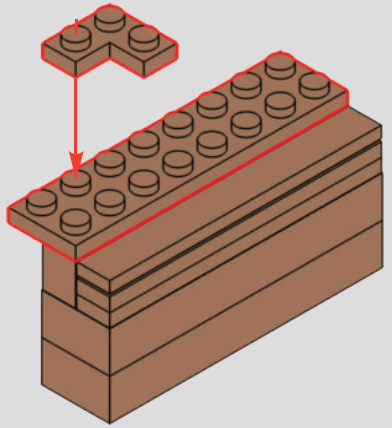

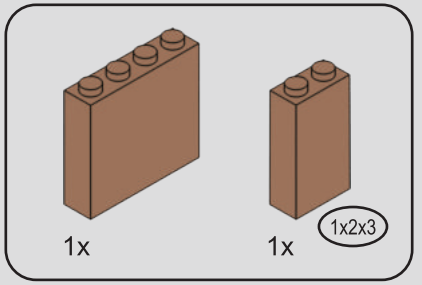

129



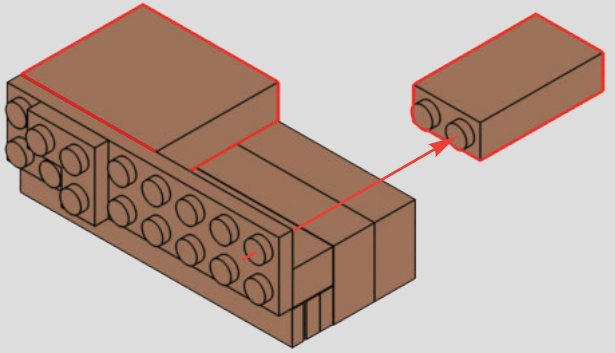

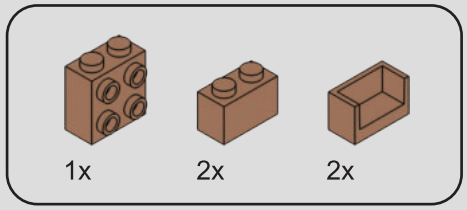

130

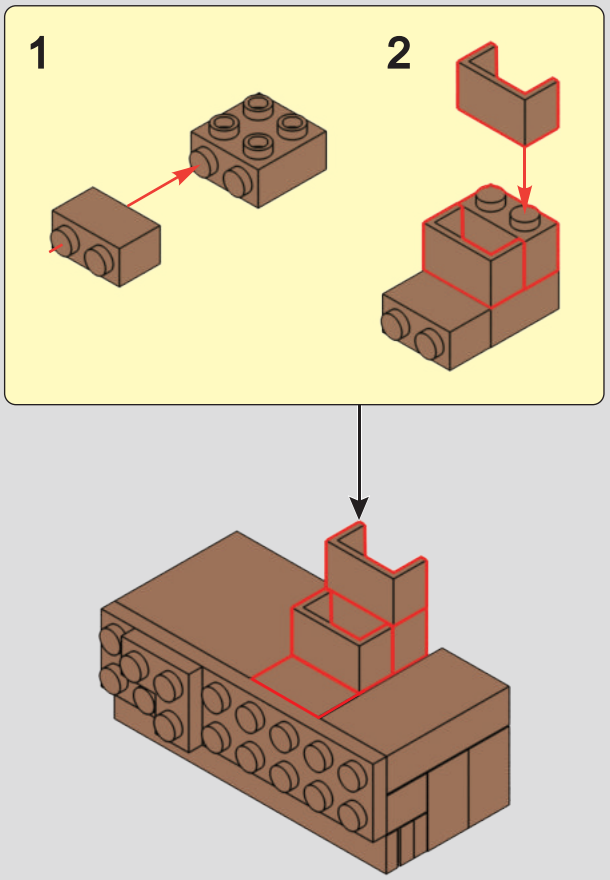

131

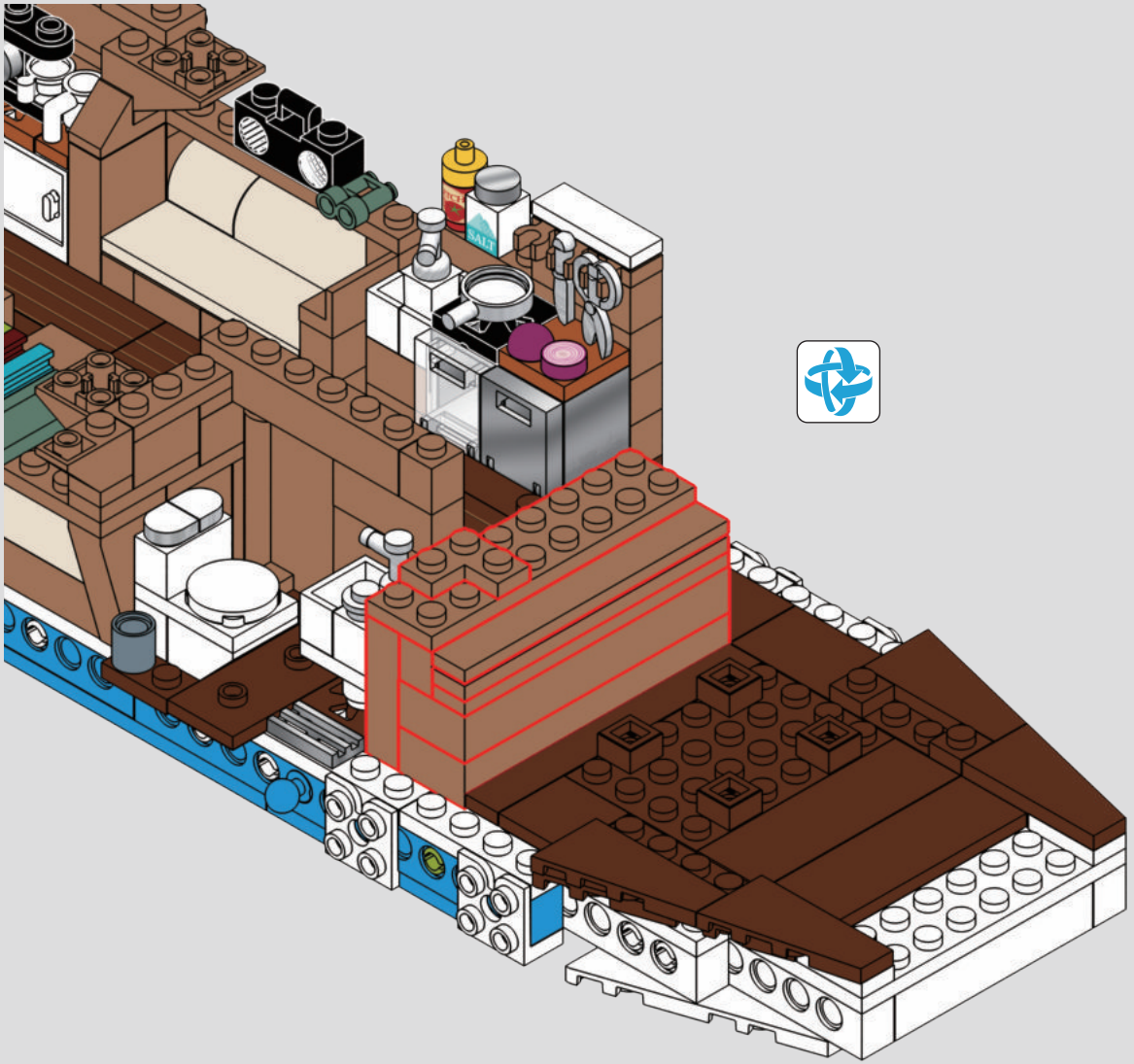

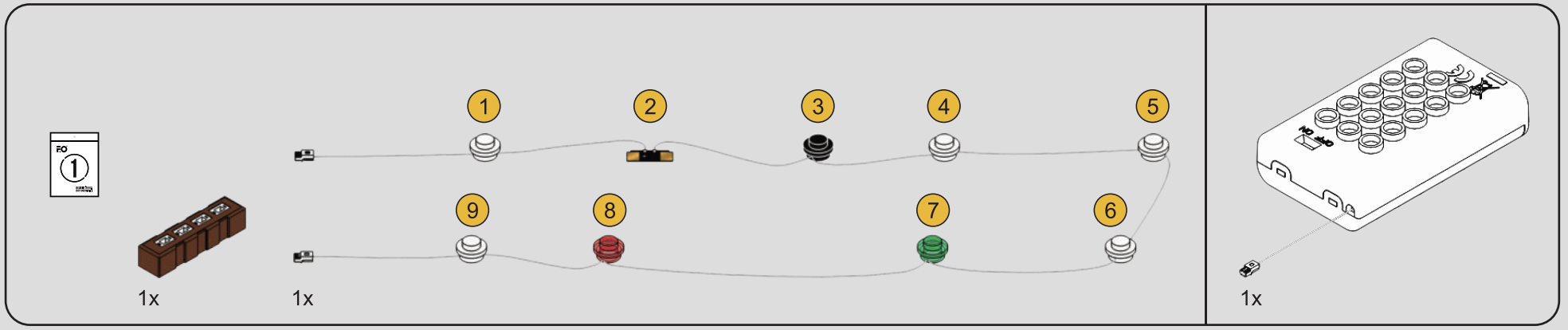

132

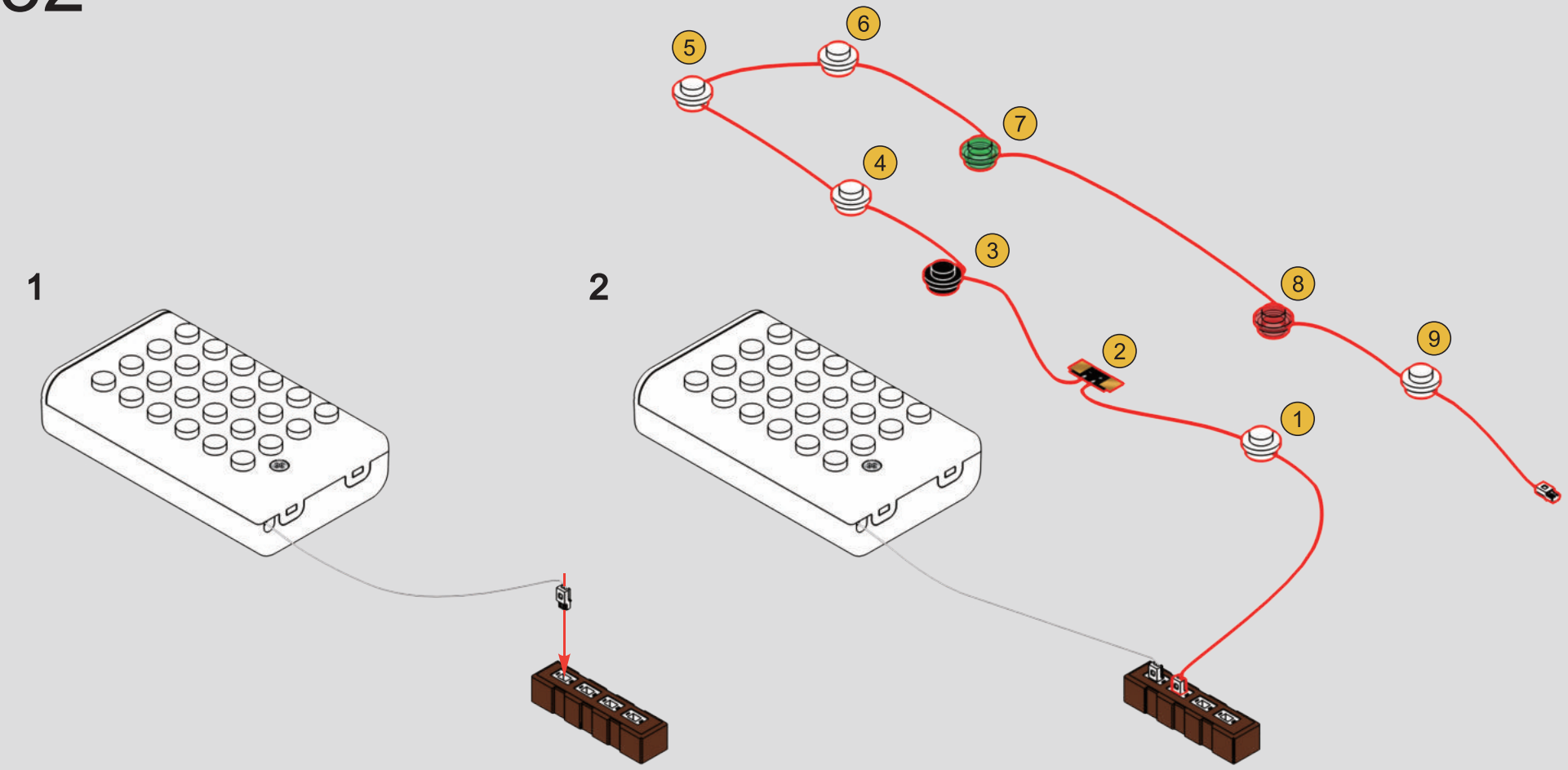

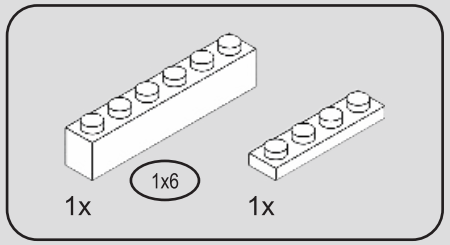

133

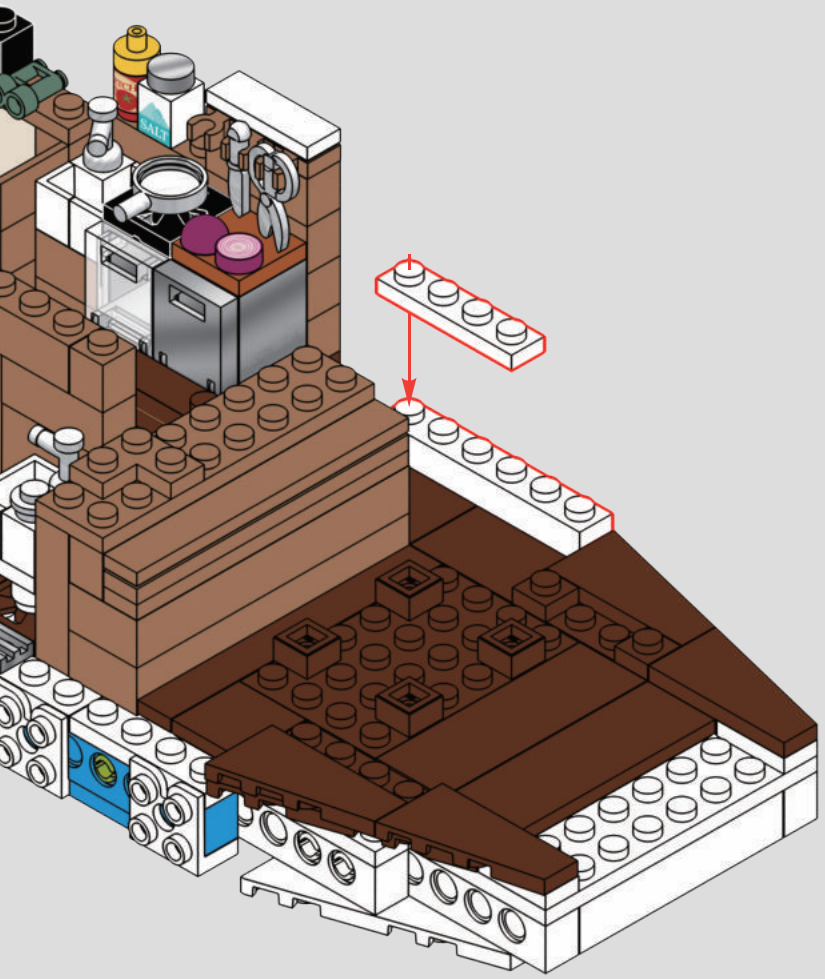

134

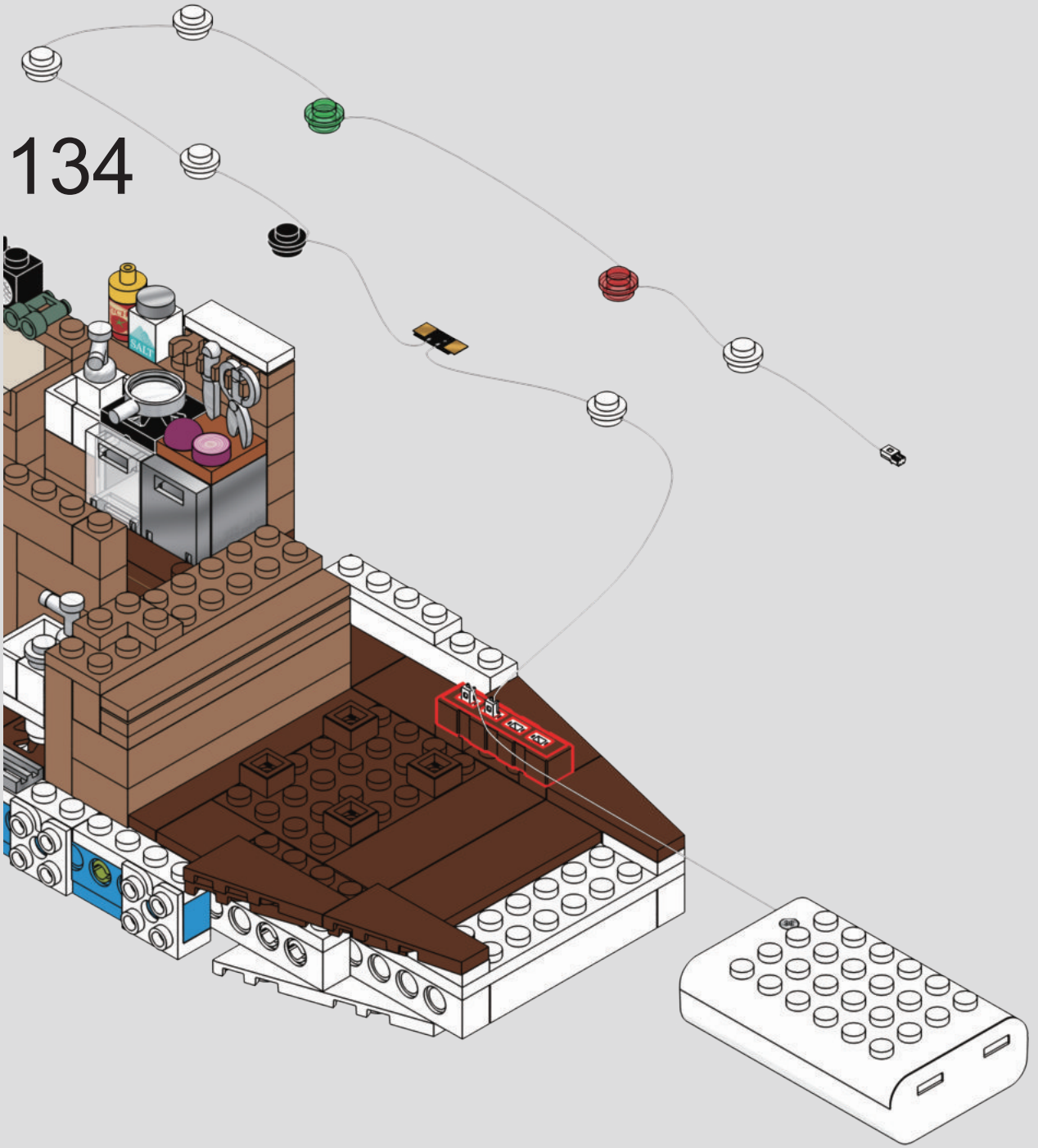

135

1

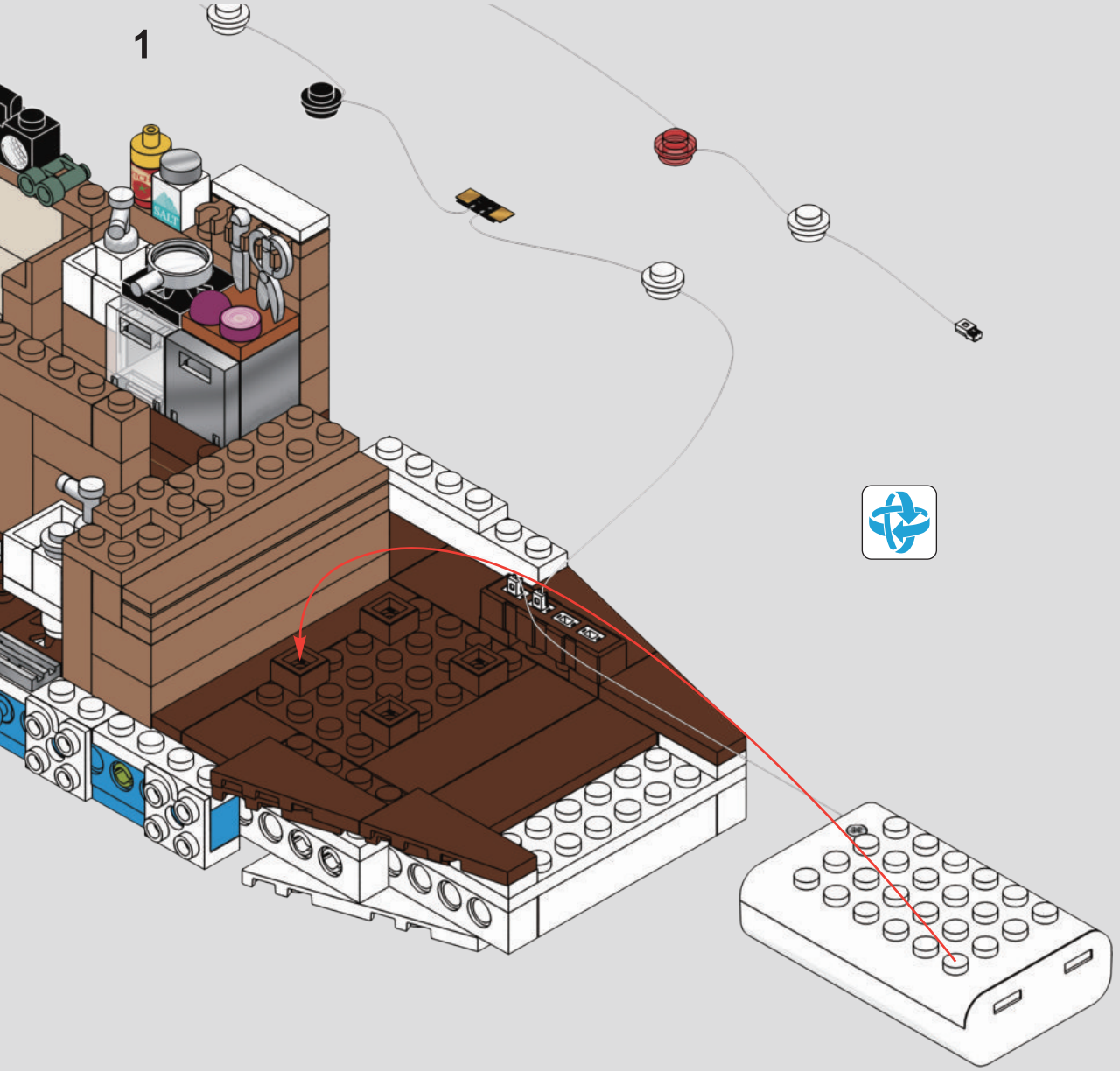

2

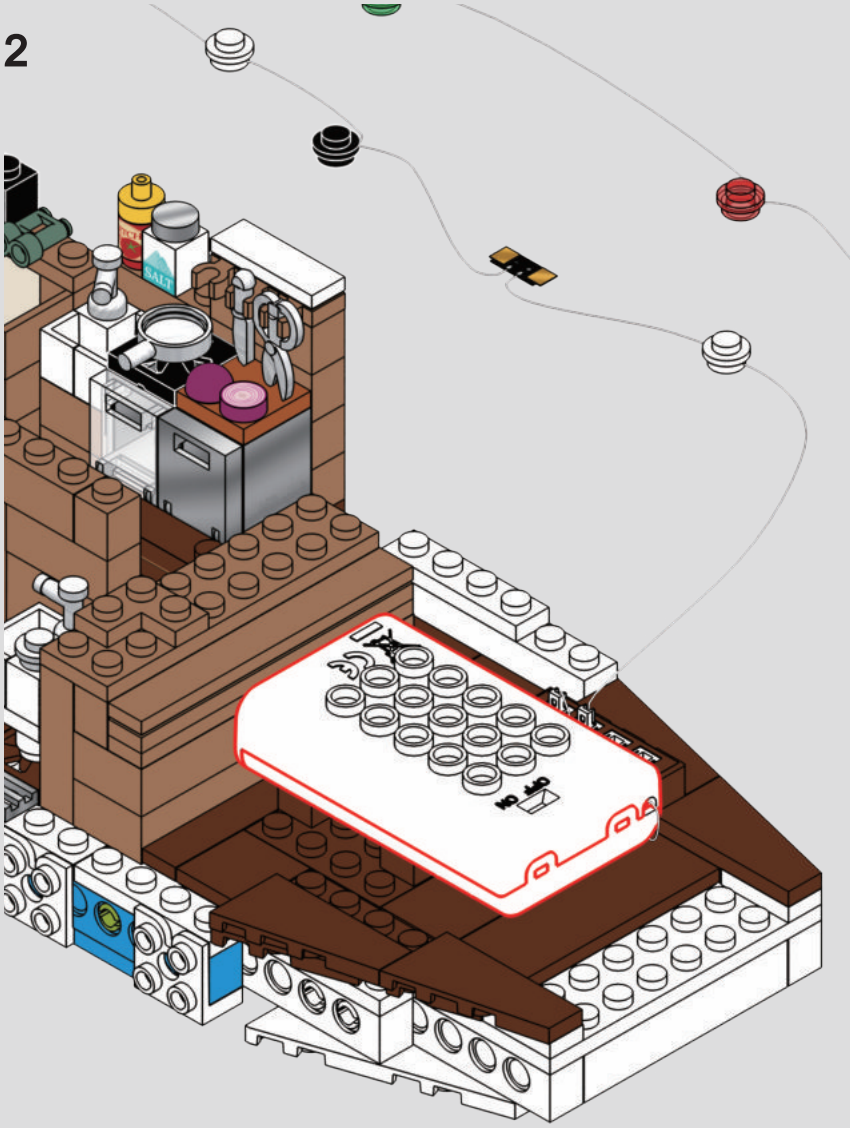

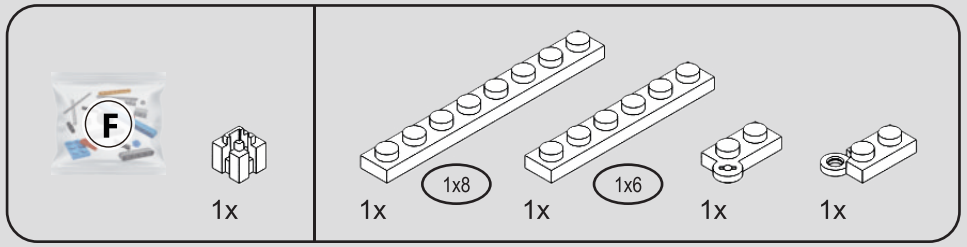

136

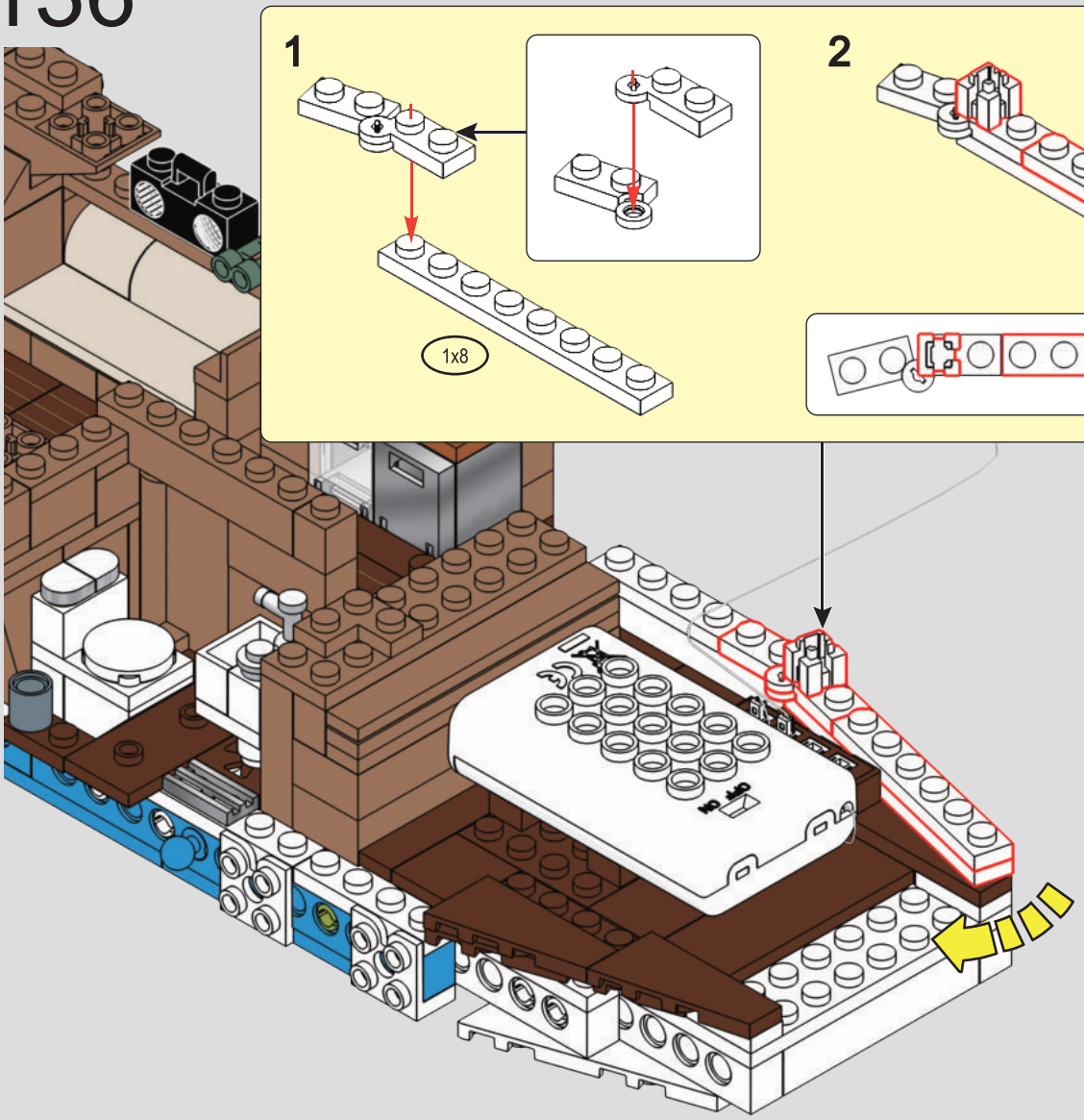

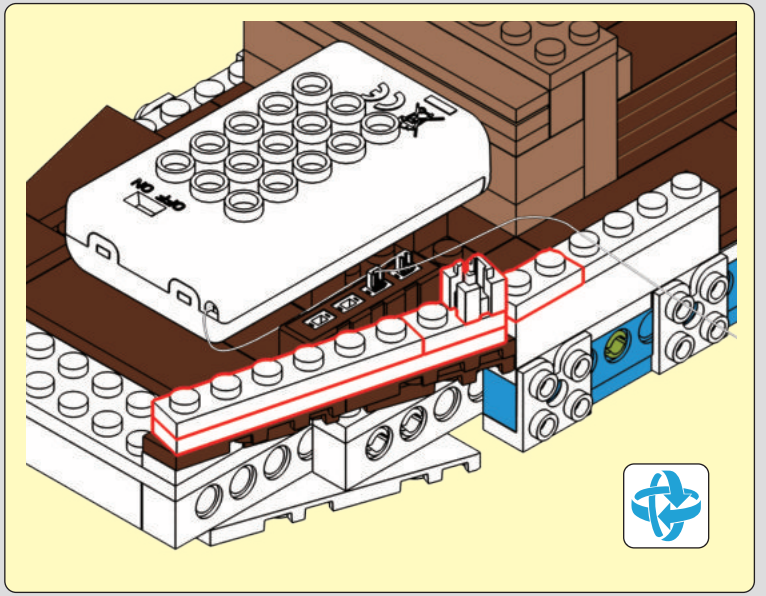

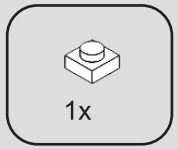

137

1

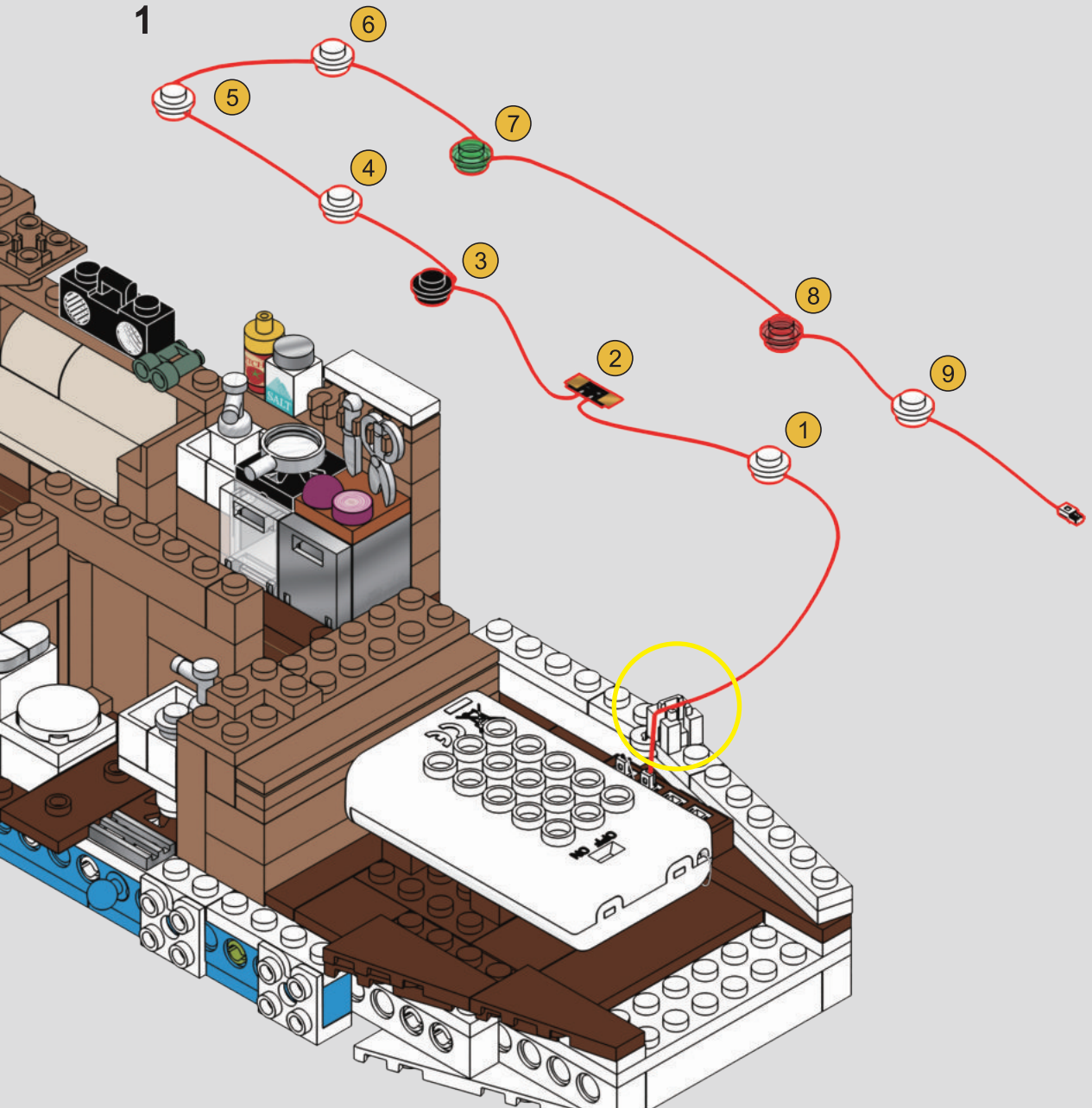

2

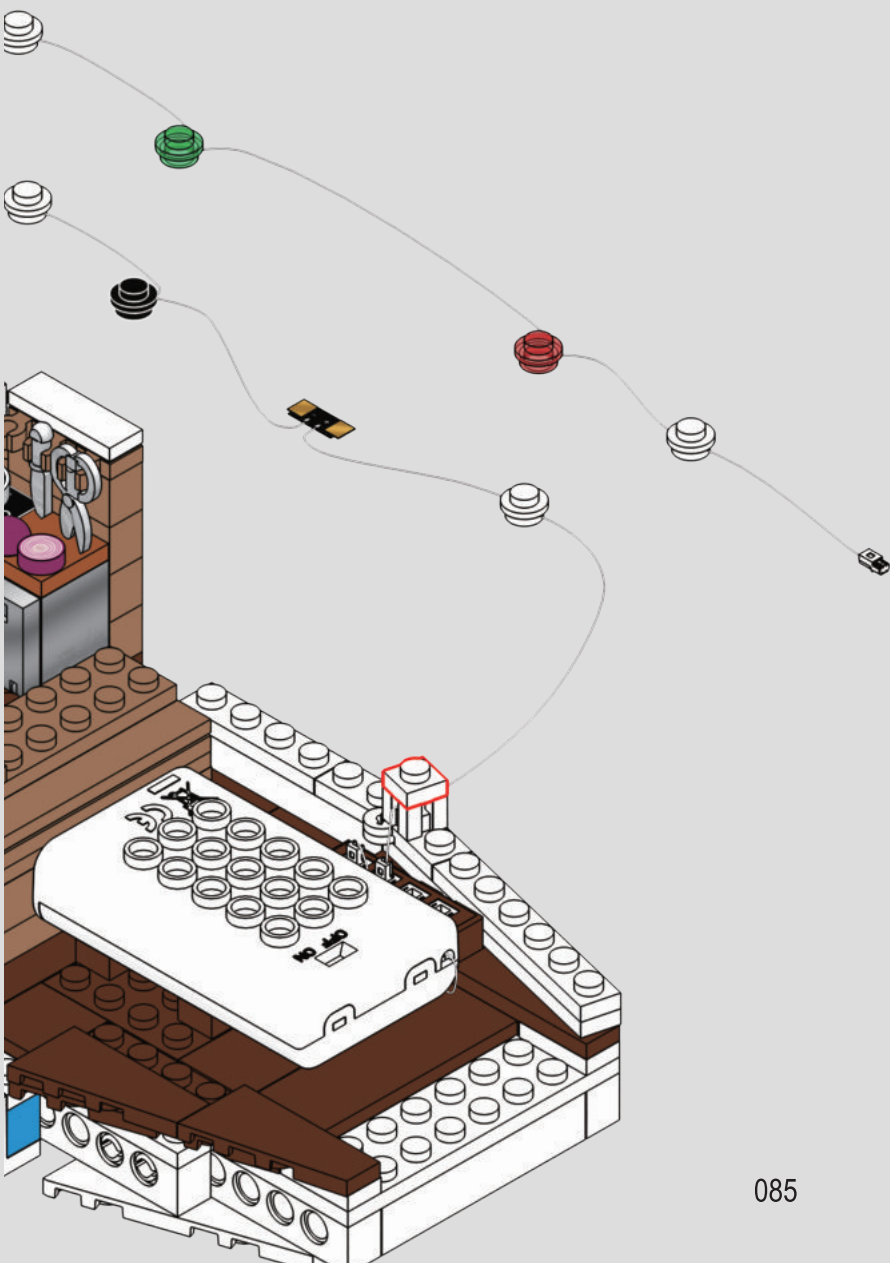

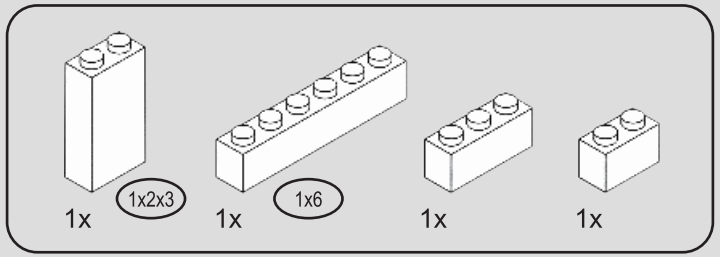

138

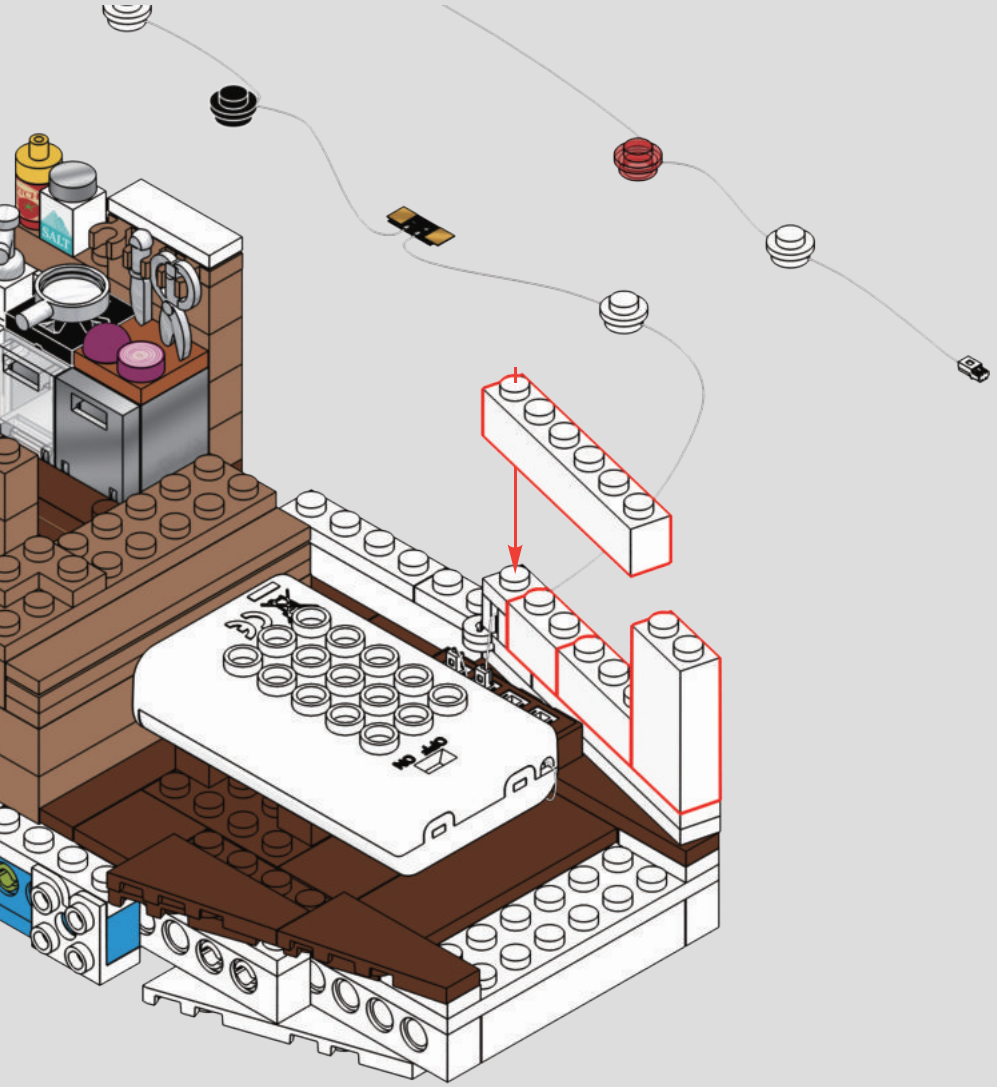

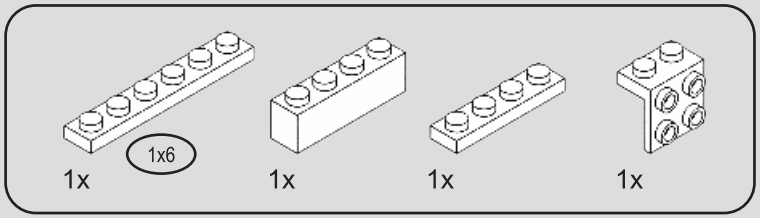

139

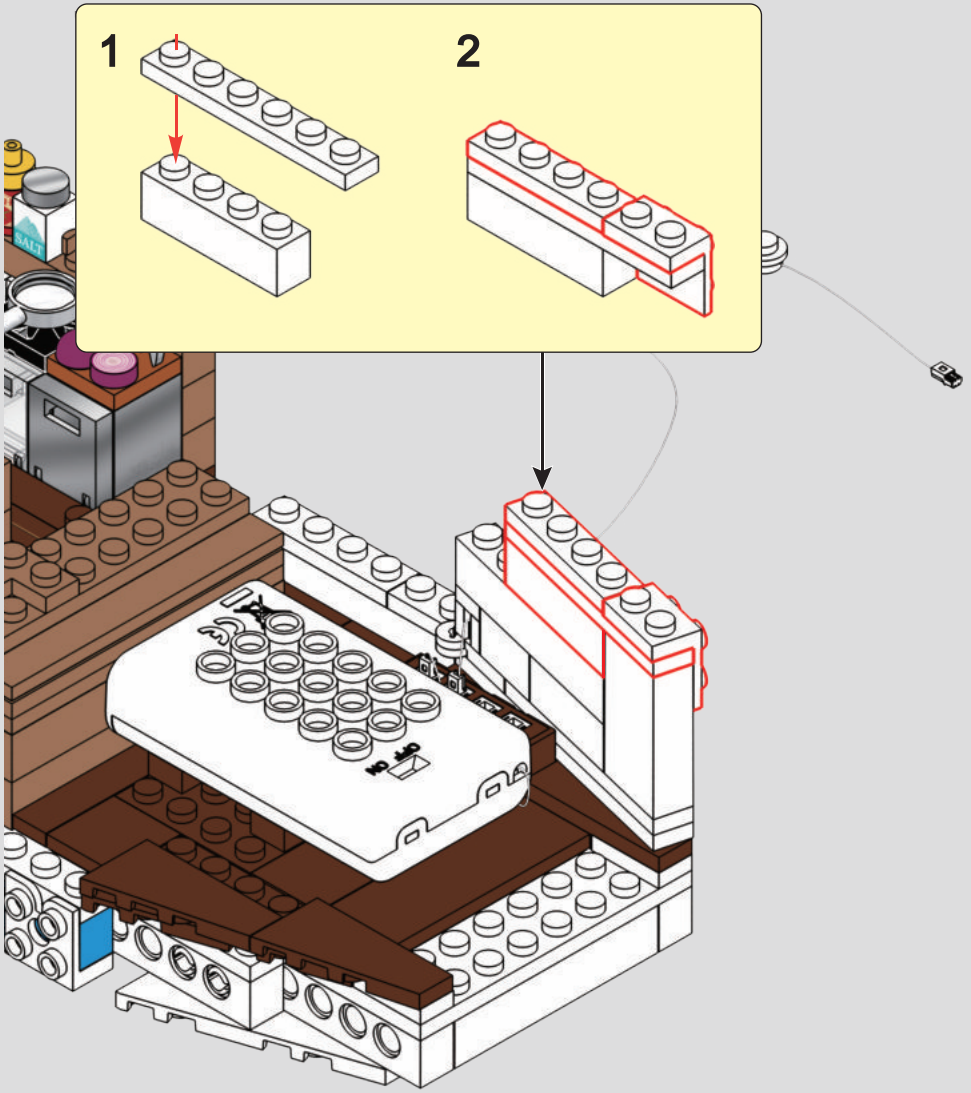

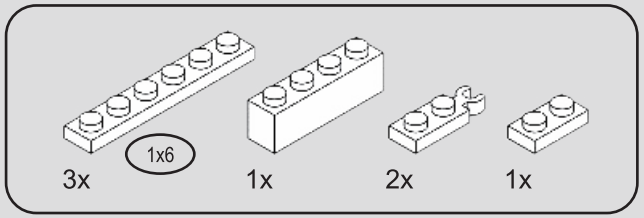

140

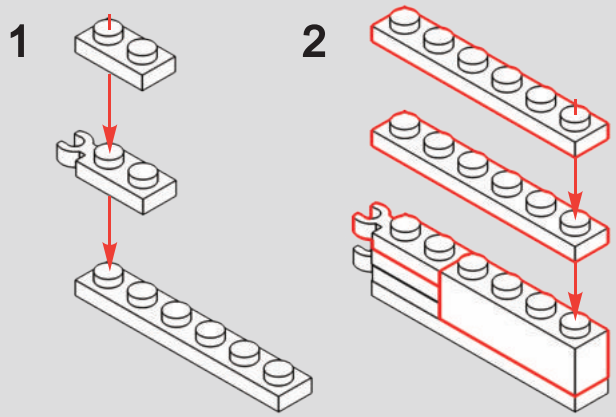

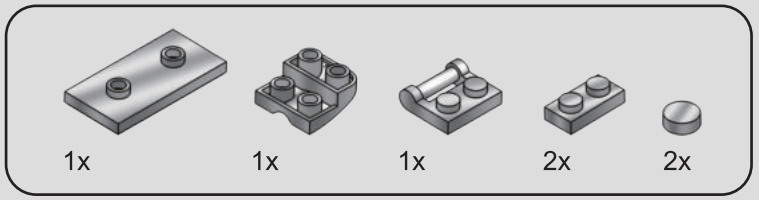

141

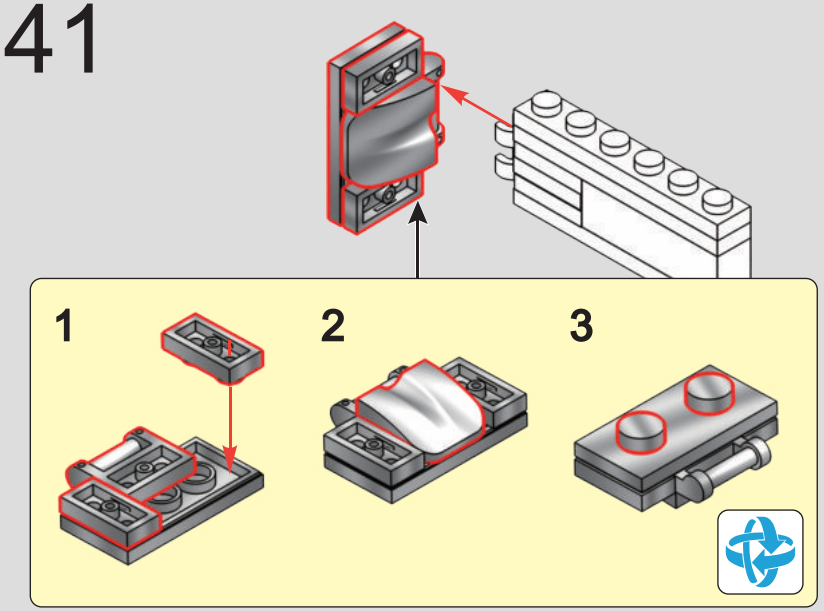

142



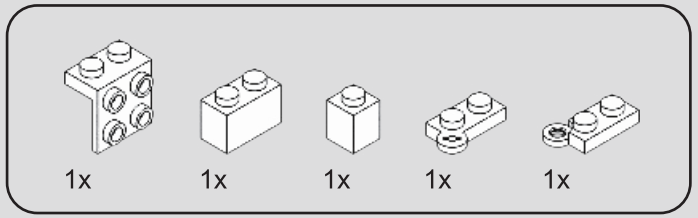

143



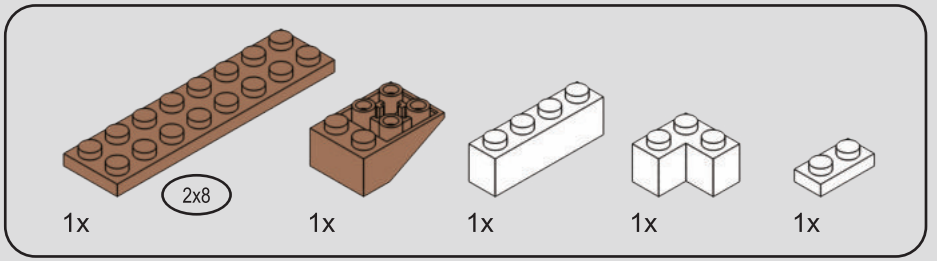

144

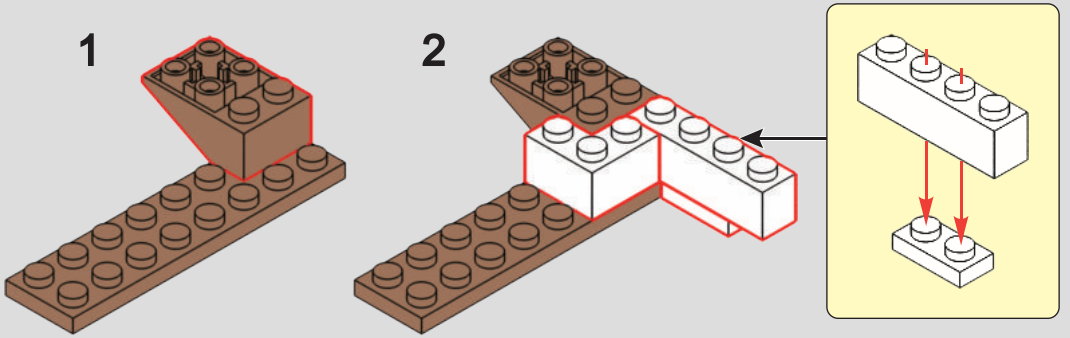

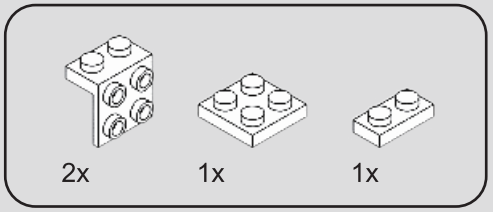

145

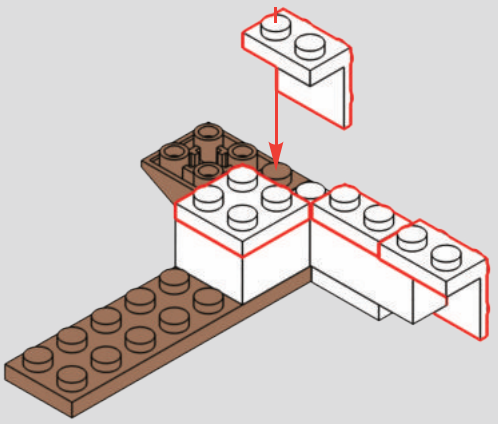

146

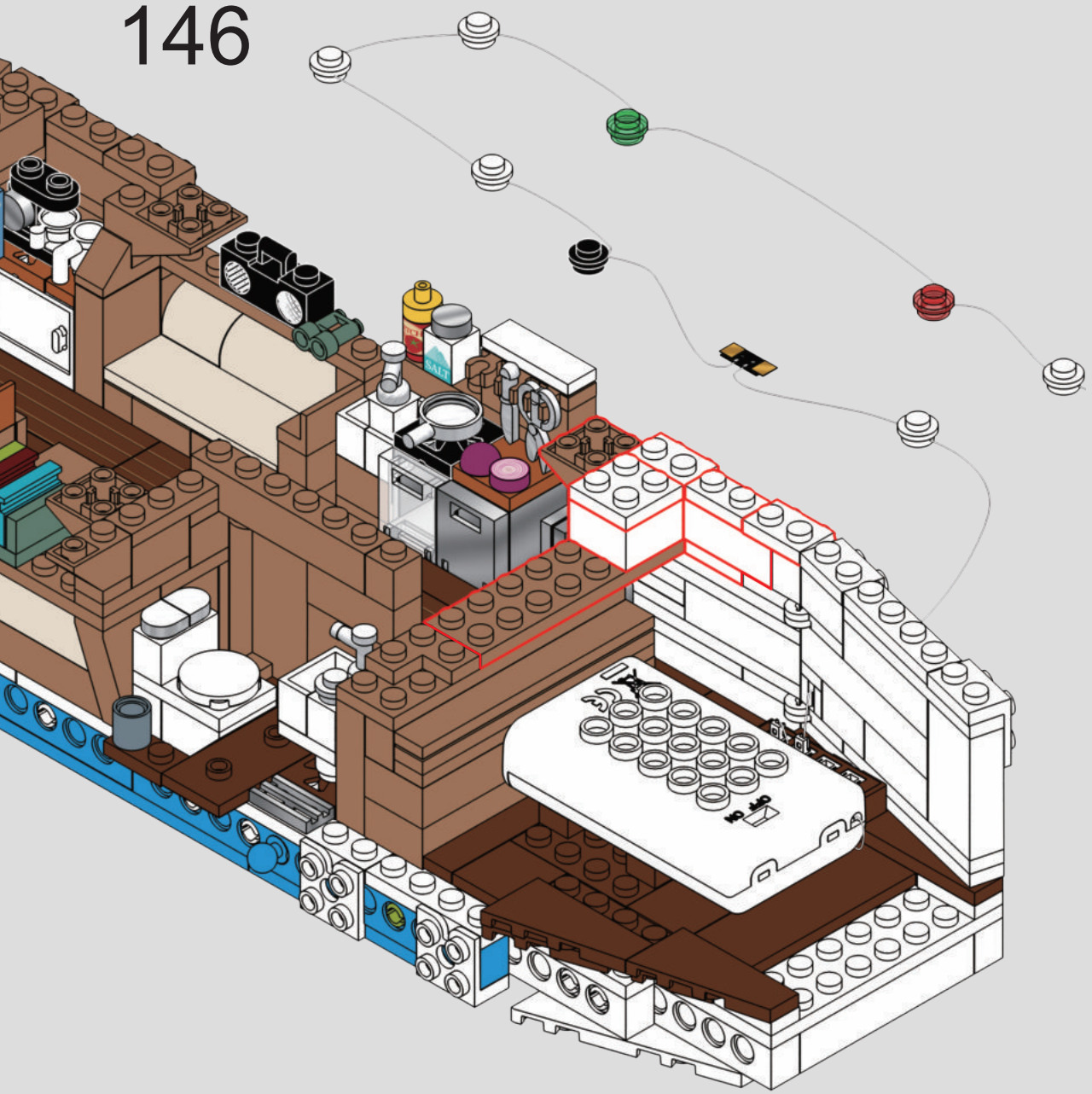

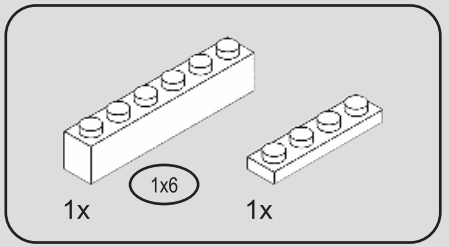

147

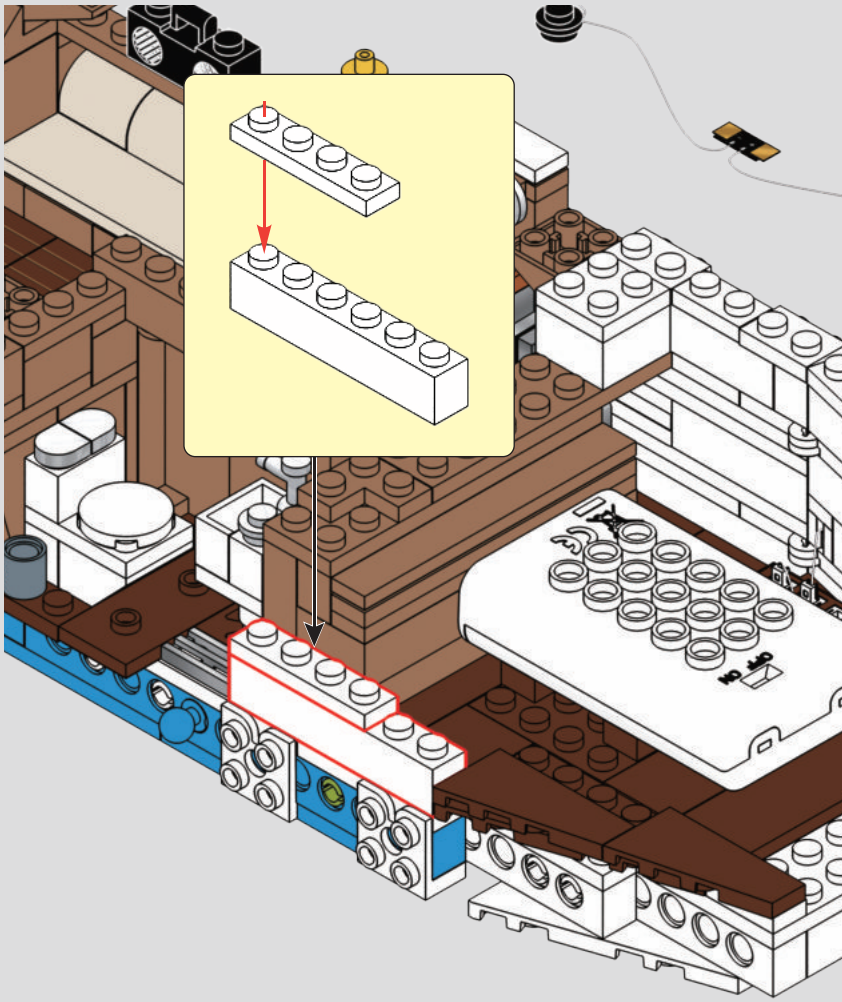

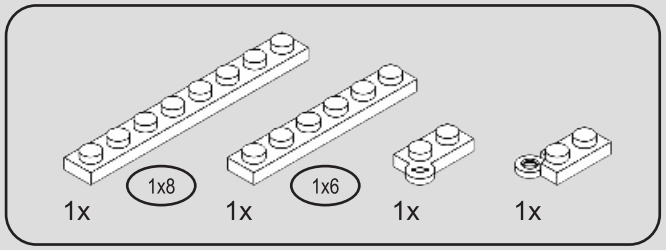

148

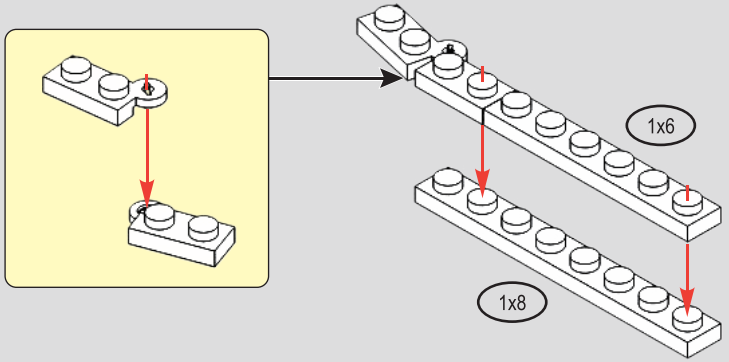

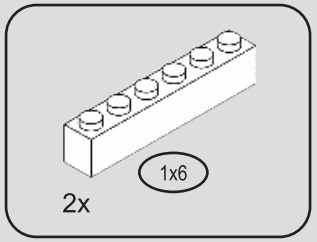

149

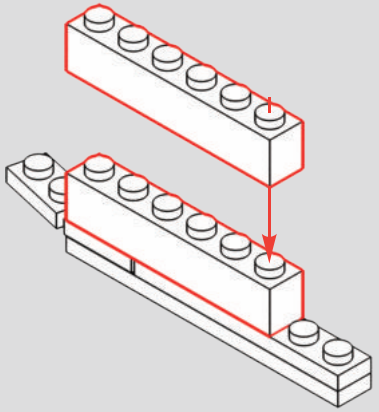

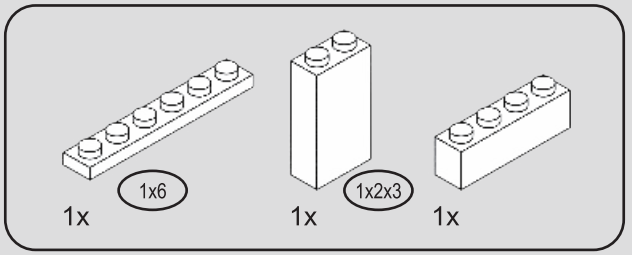

150

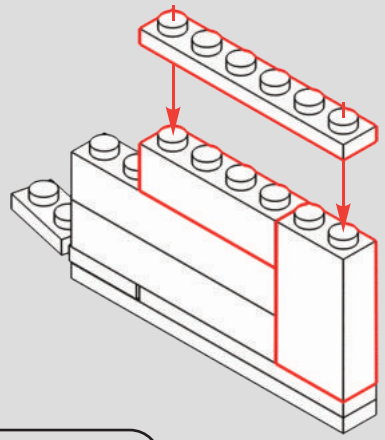

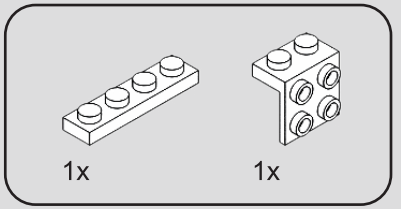

151

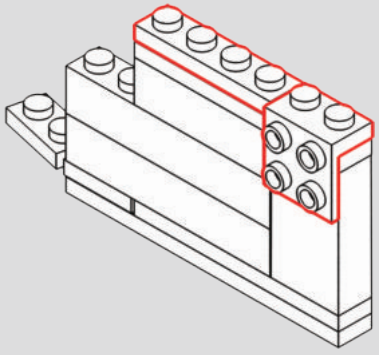

152

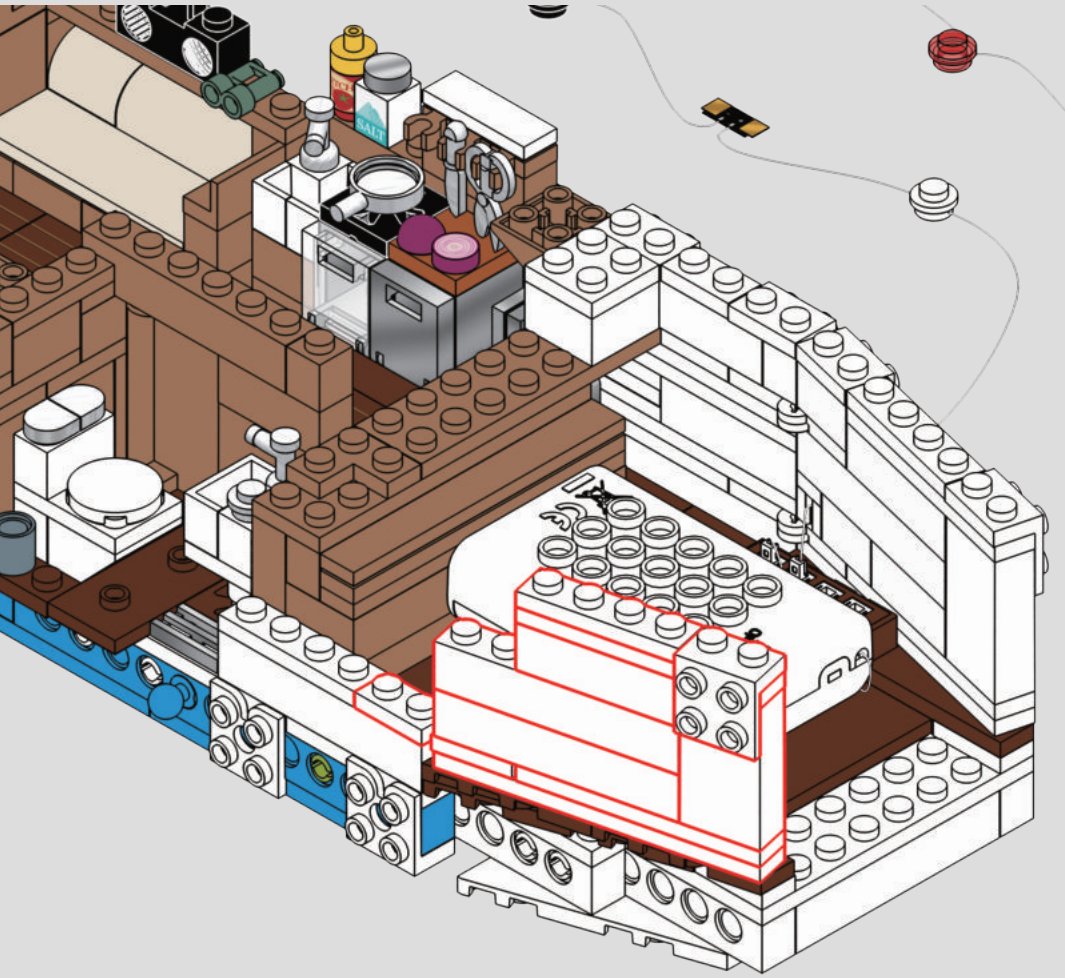

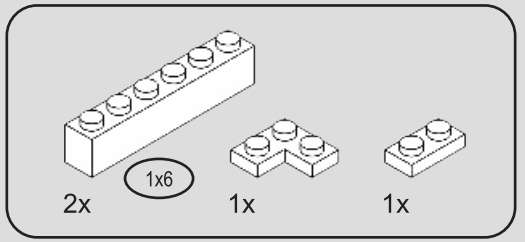

153

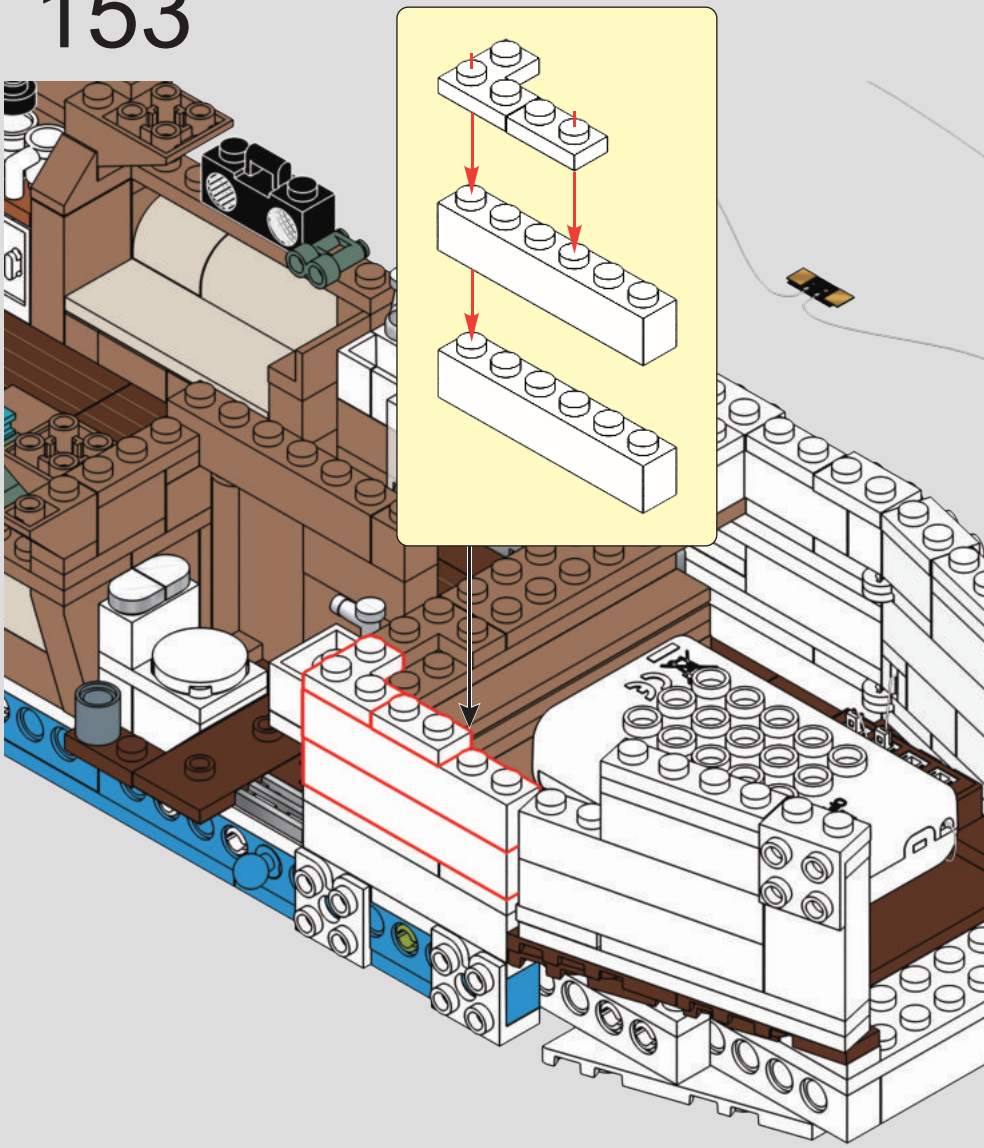

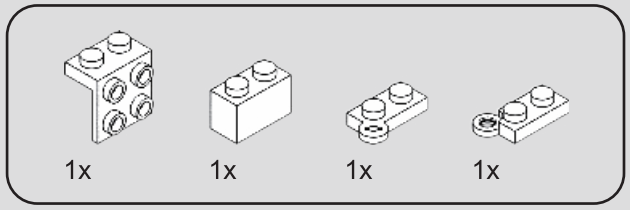

154

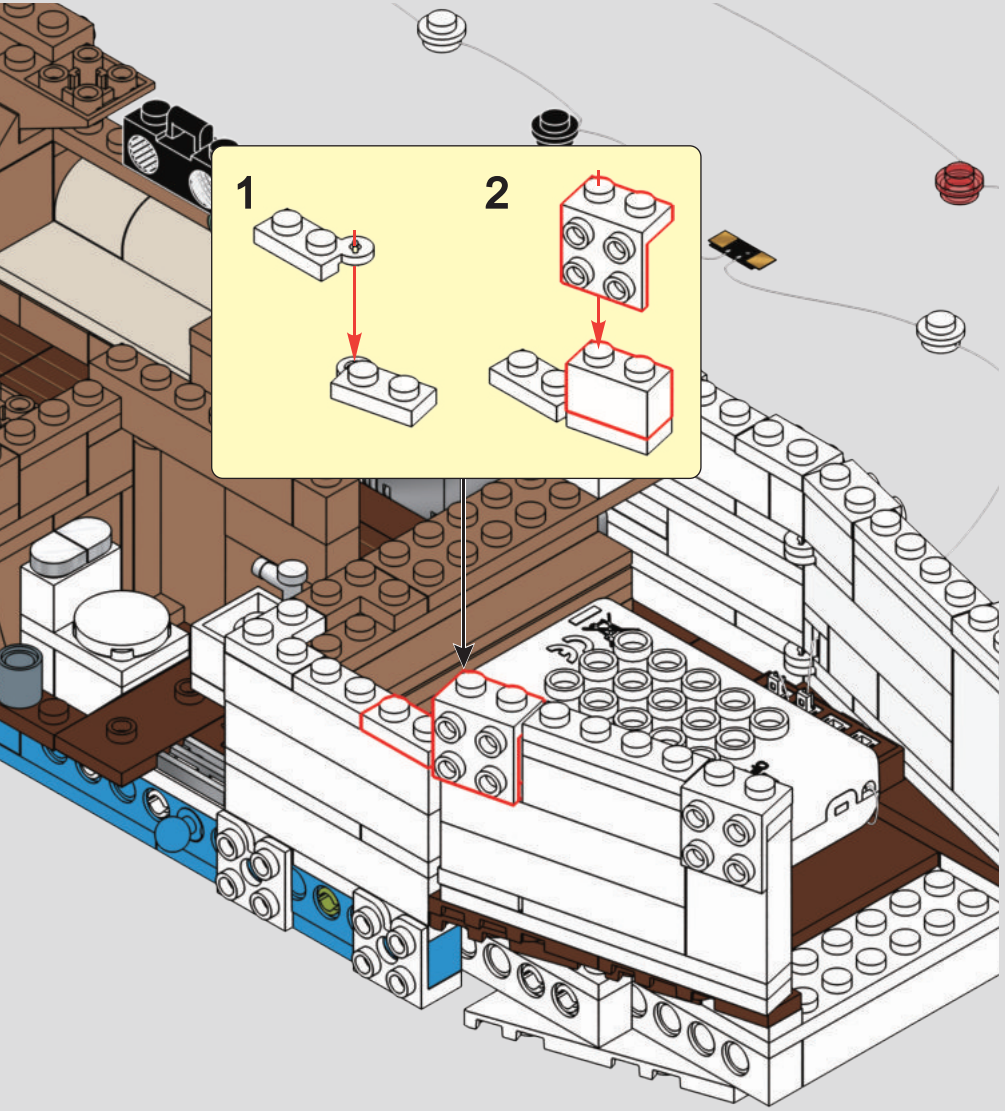

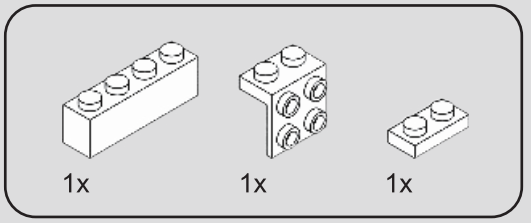

155

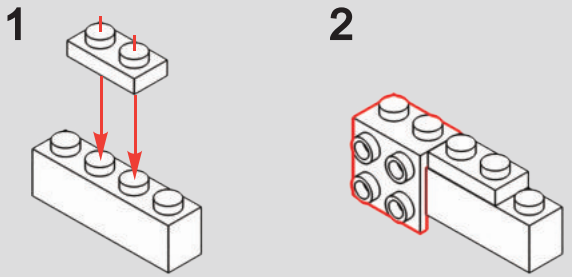

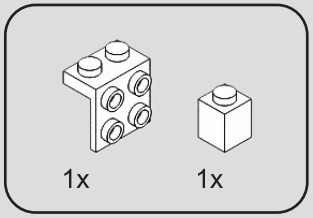

156

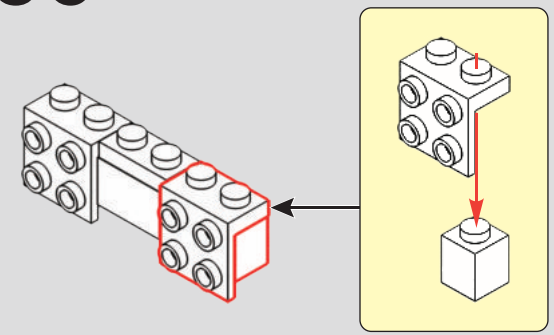

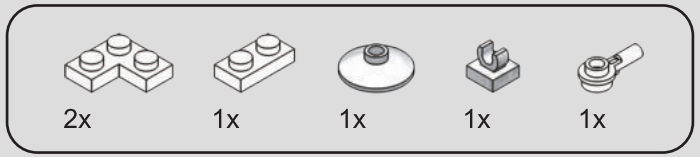

157

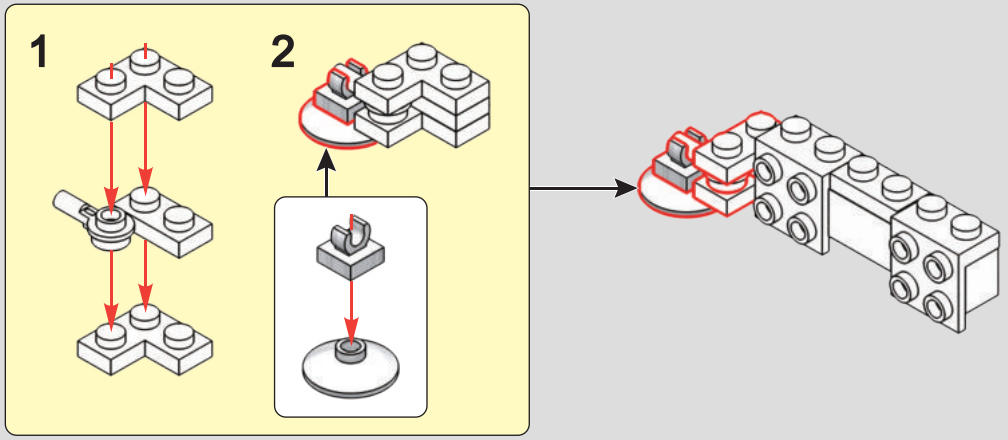

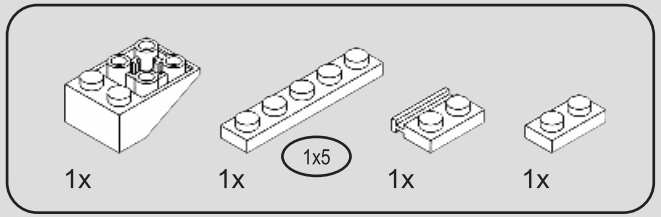

158

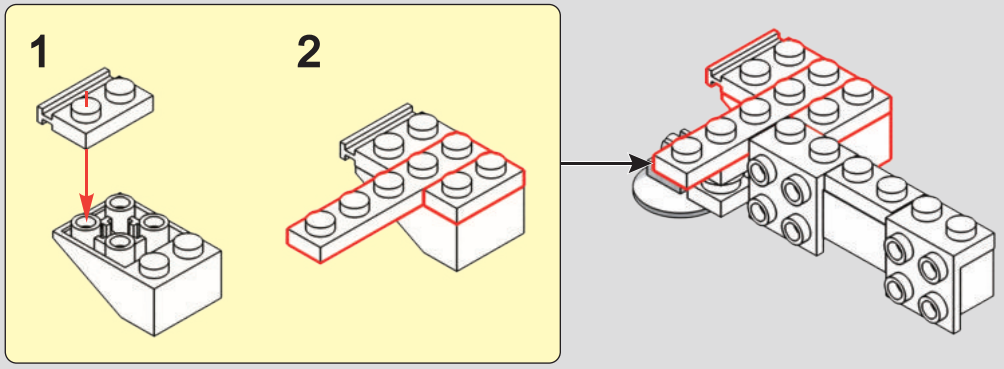

159

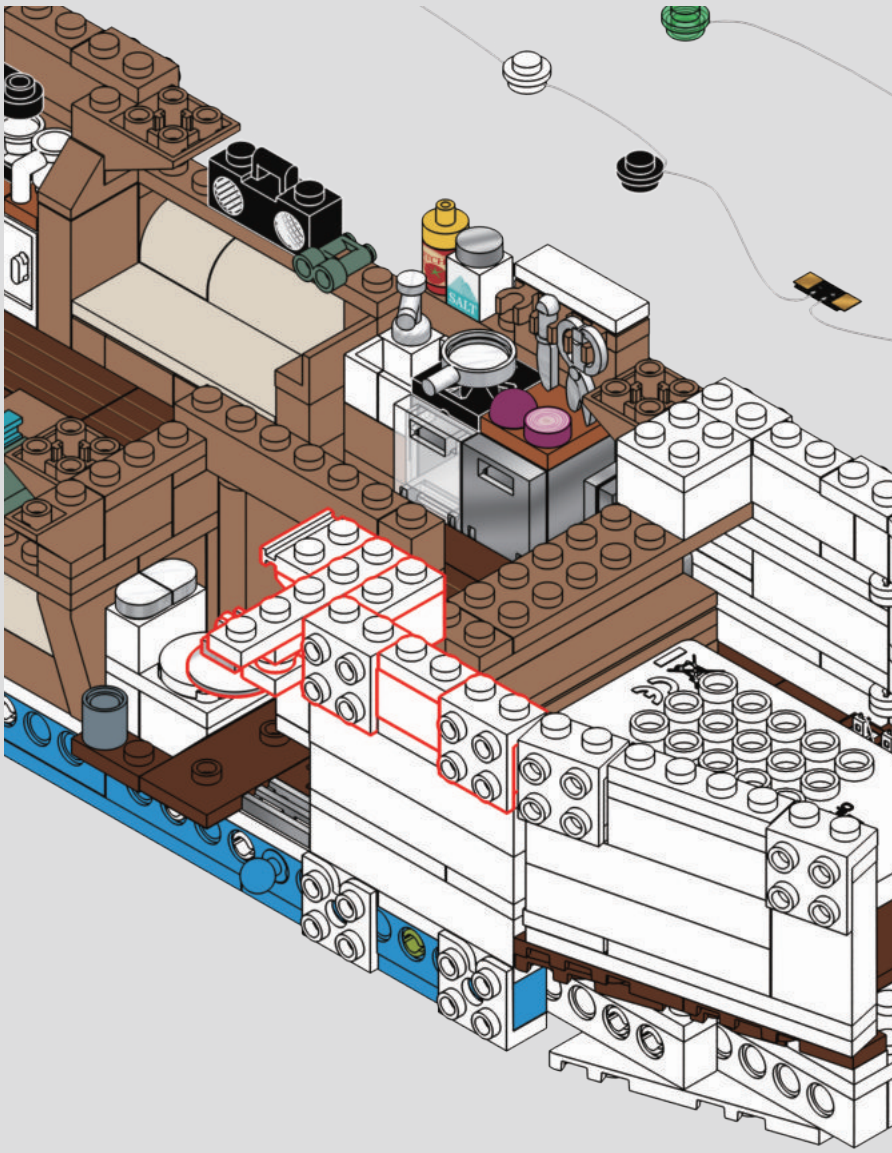

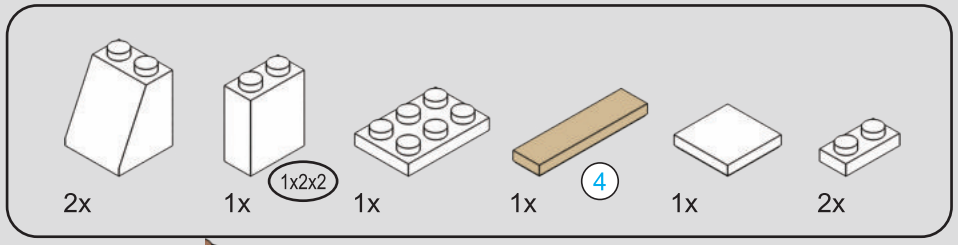



160

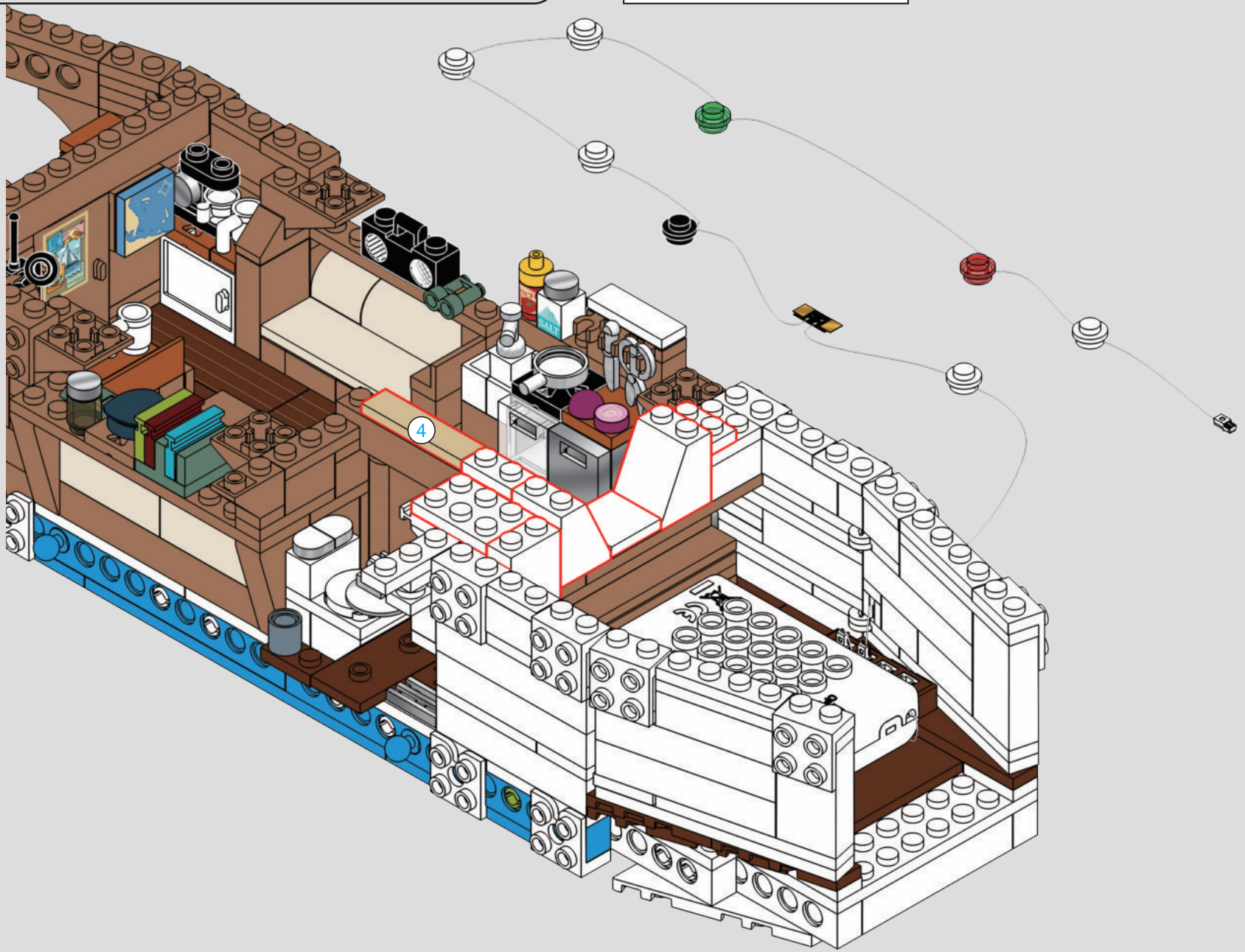

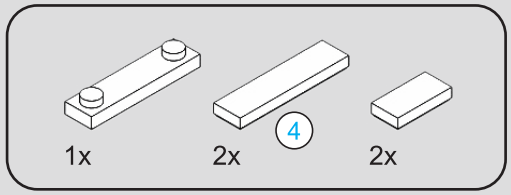

4 1:1

161

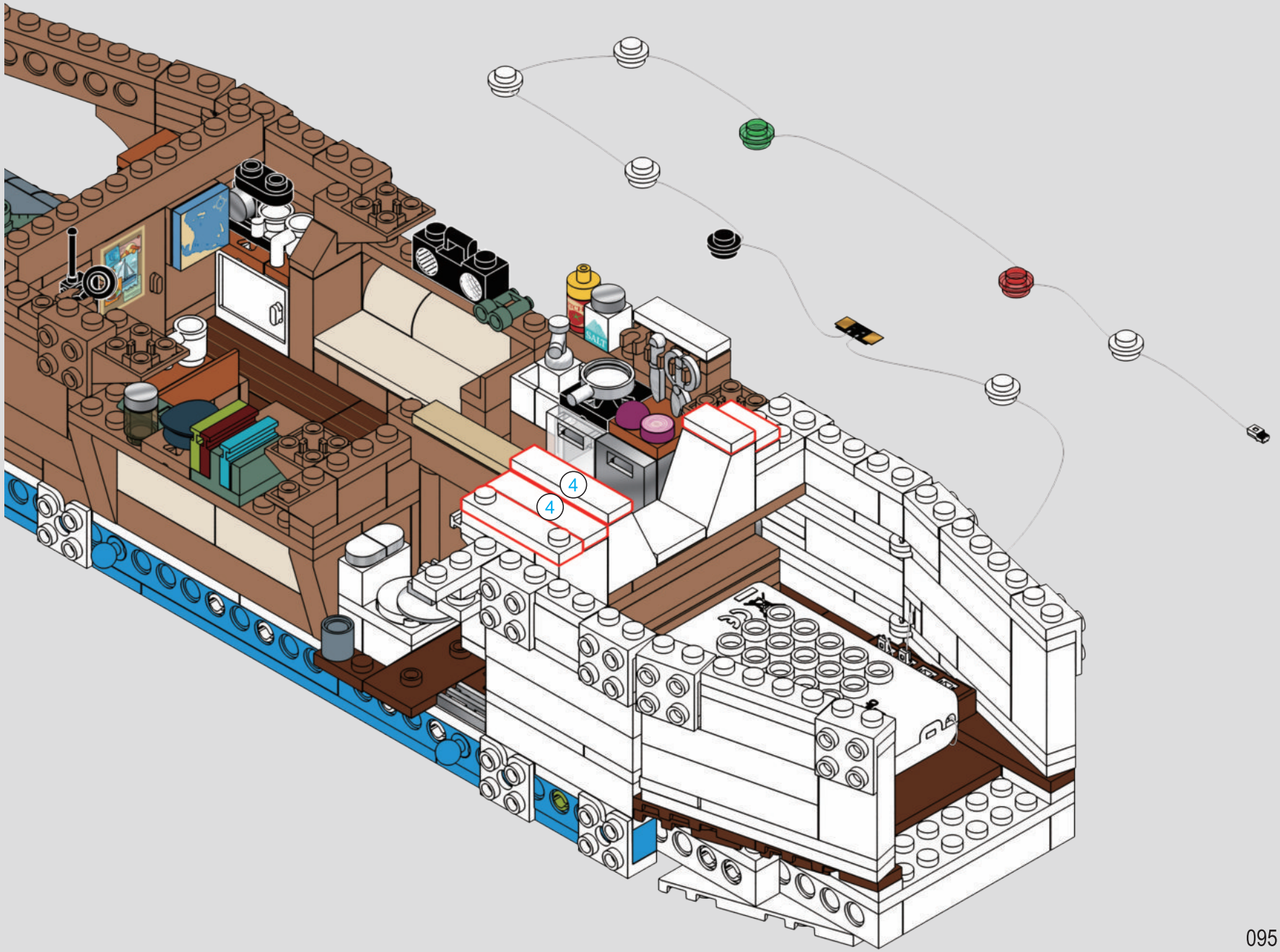

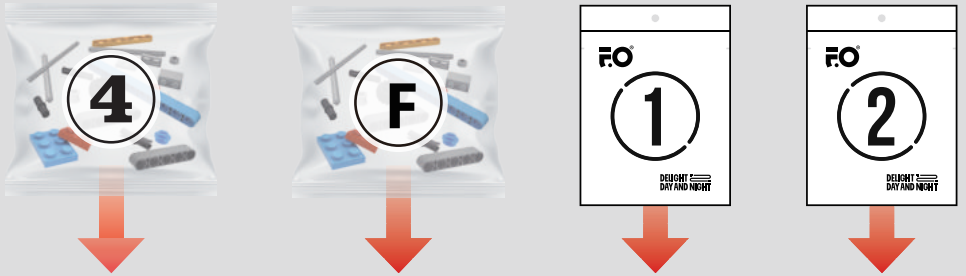
4
F
F.O
1
DELIGHT DAY AND NIGHT
F.O
2
DELIGHT DAY AND NIGHT

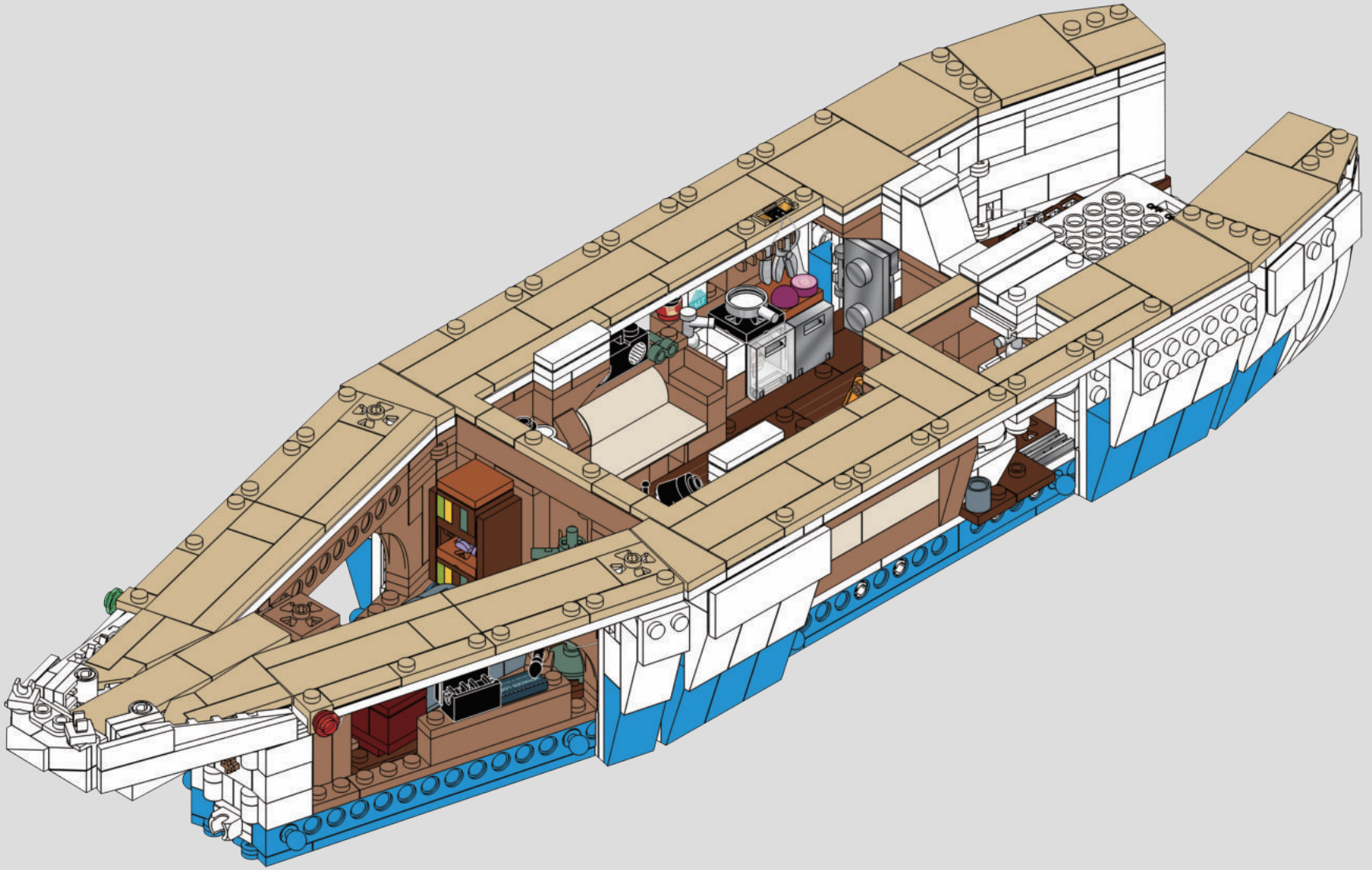

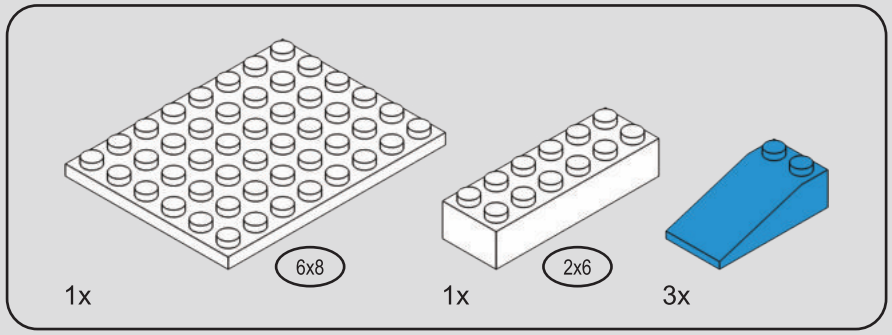

162

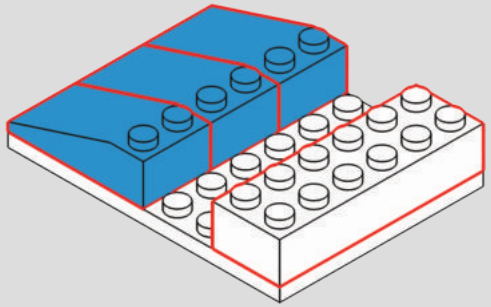

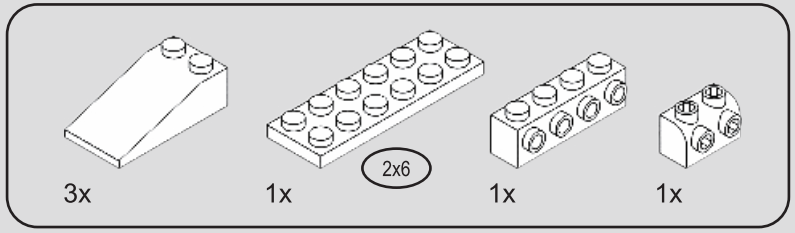

163

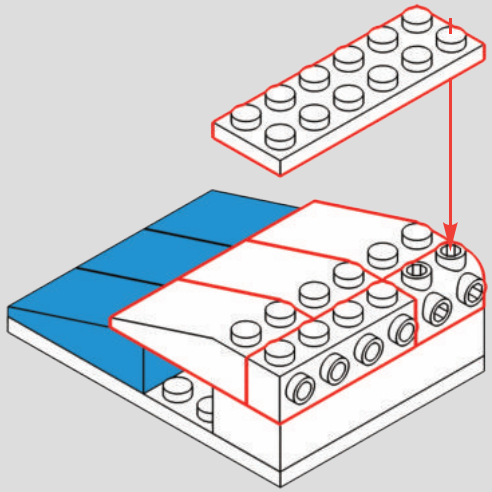

164

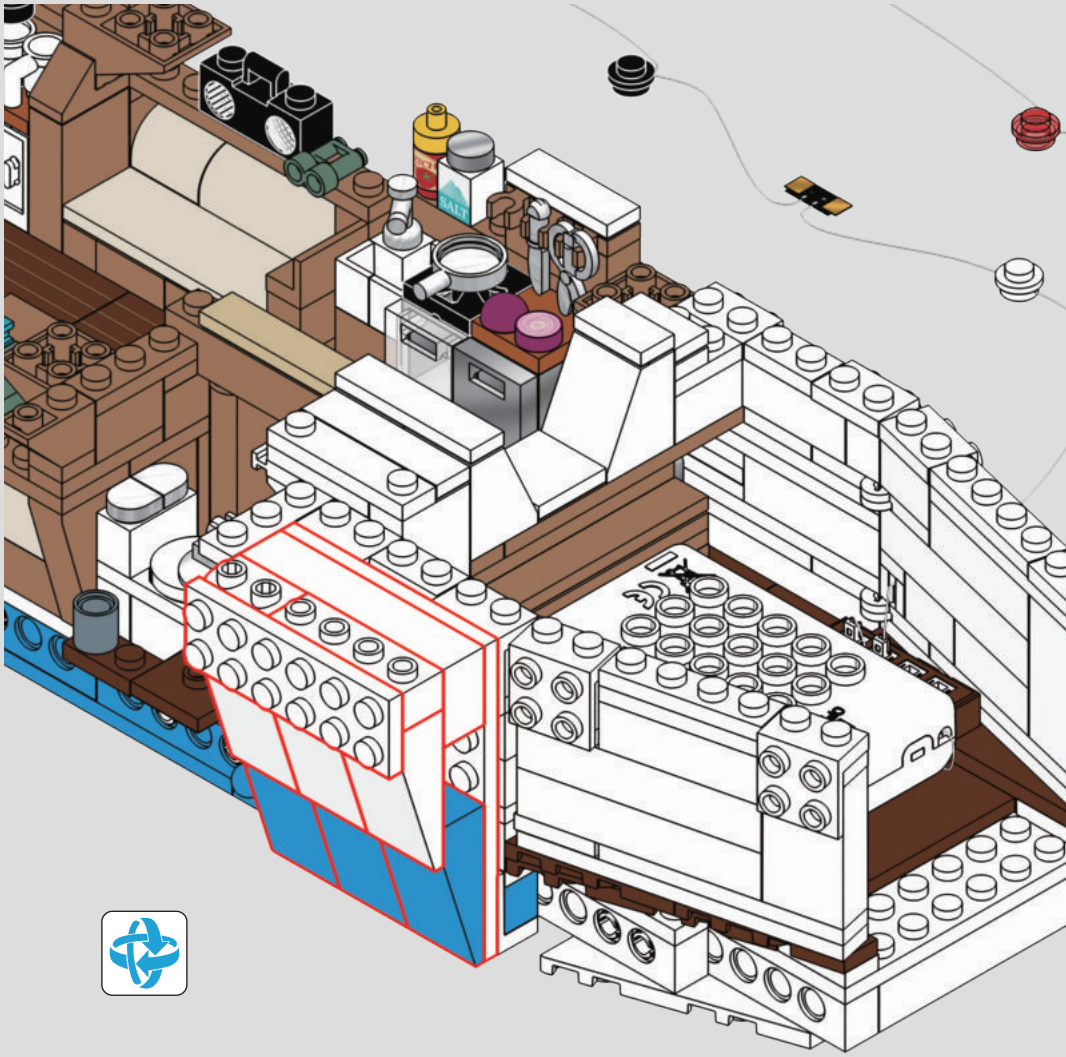

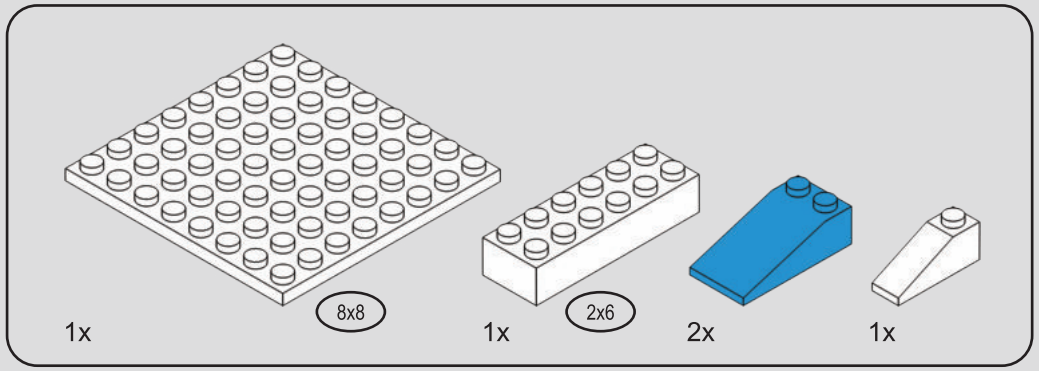

165

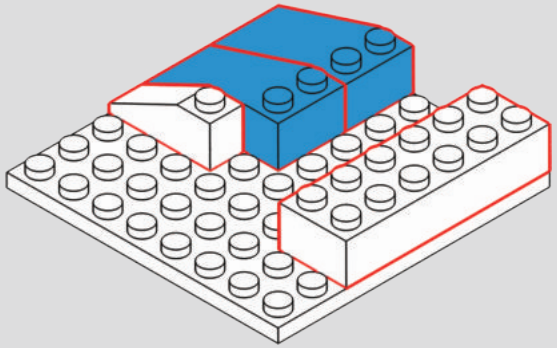

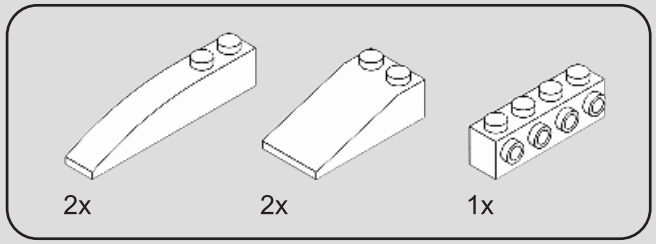

166

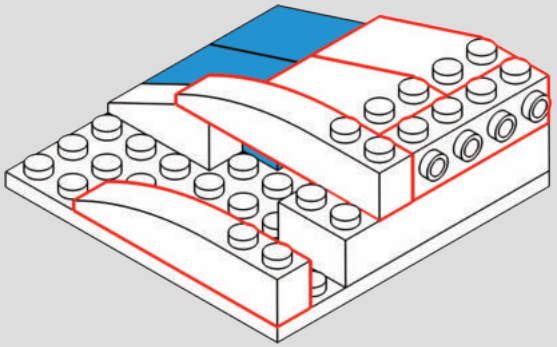

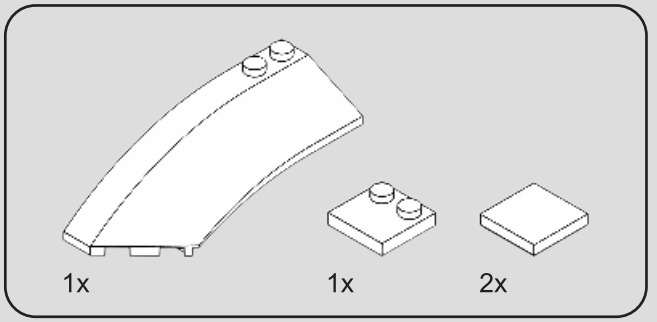

167

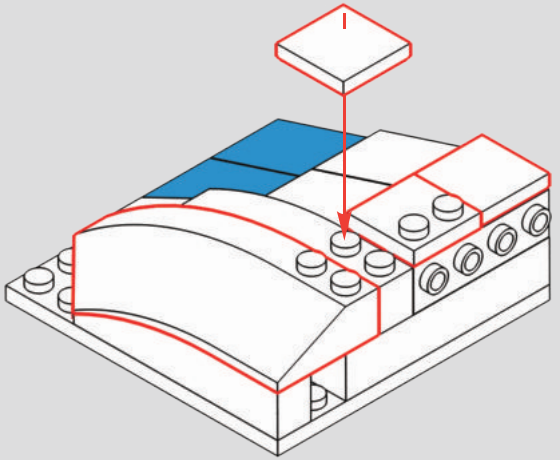

168

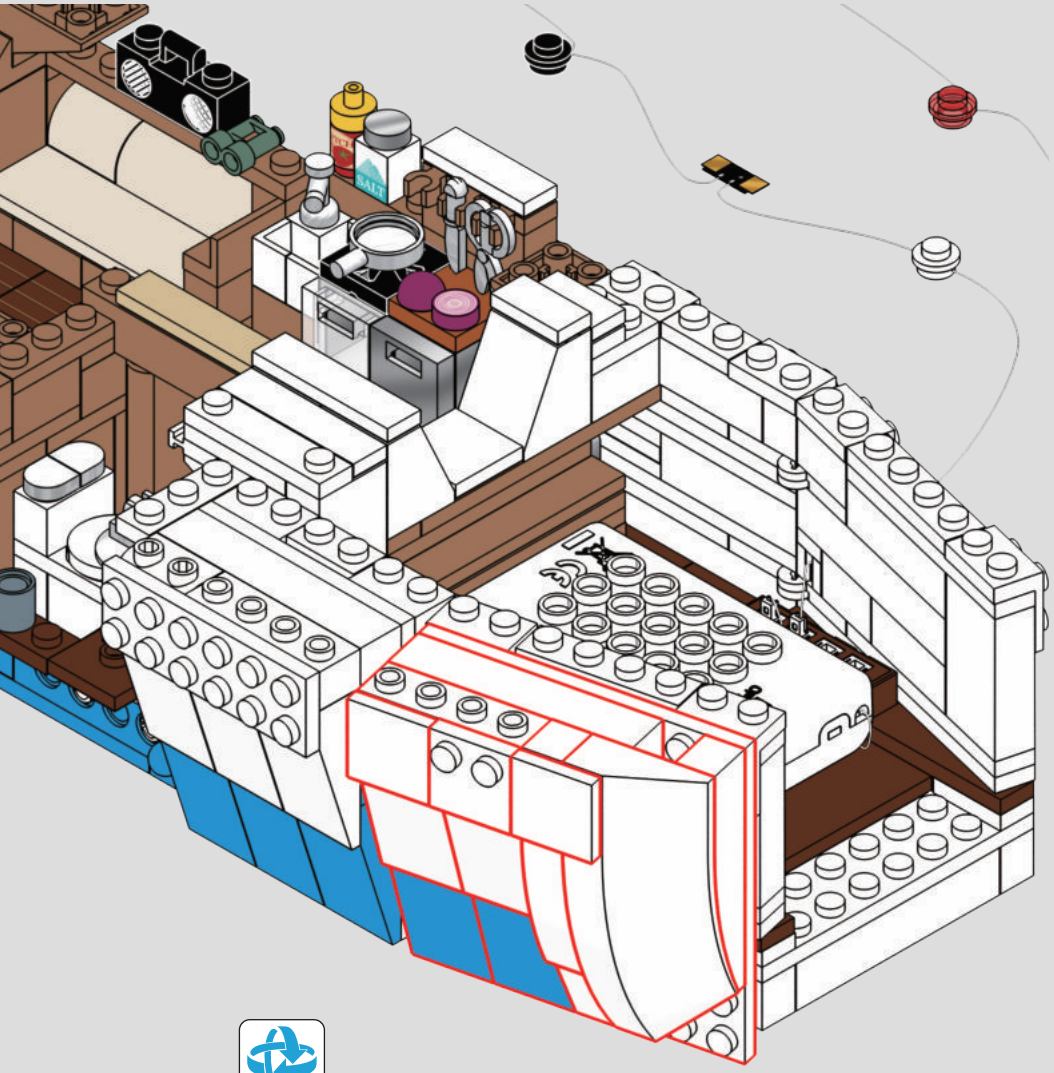

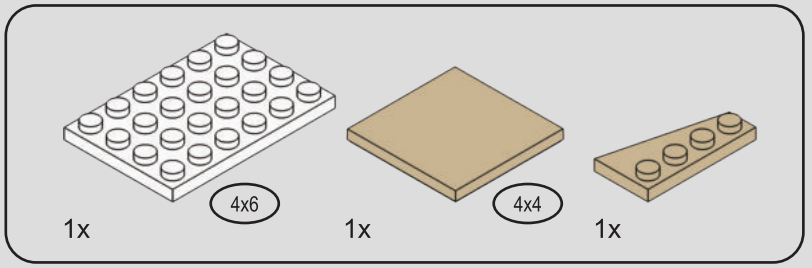

169

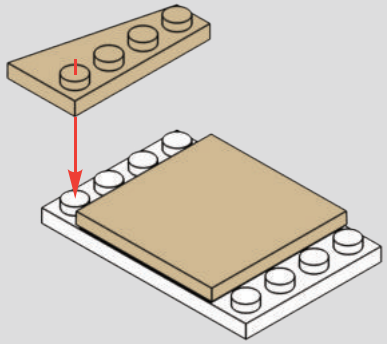

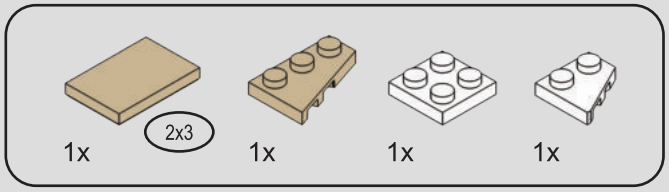

170

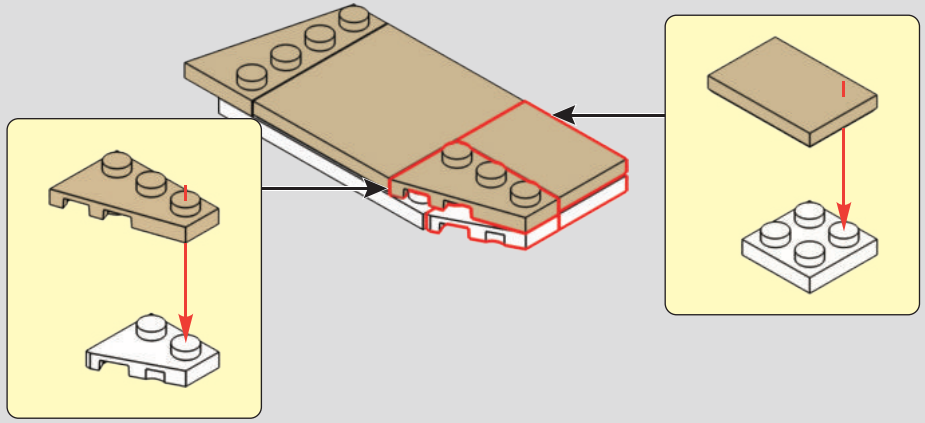

171

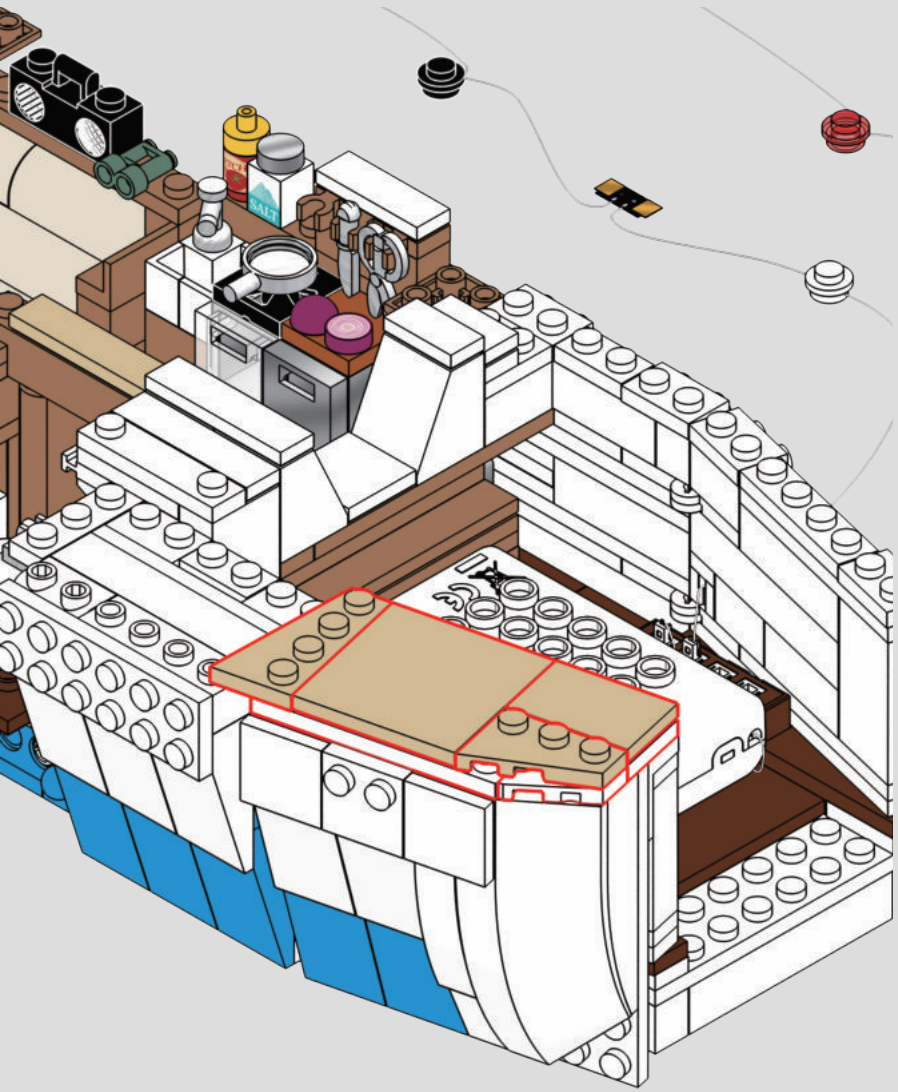

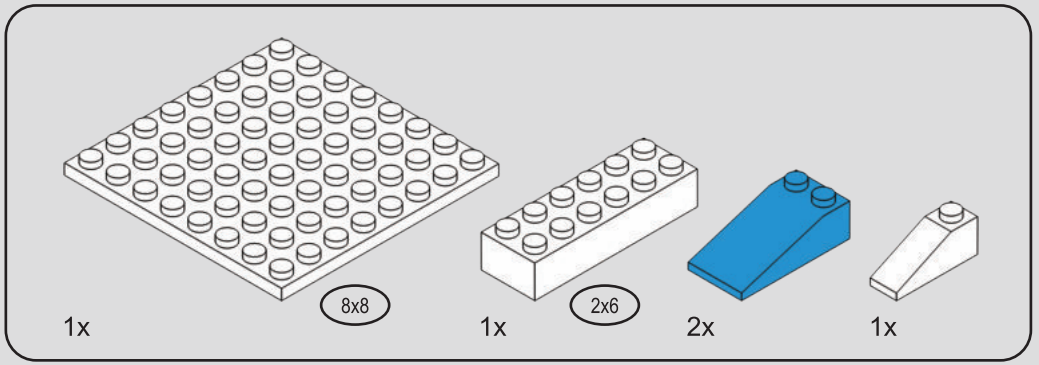

172

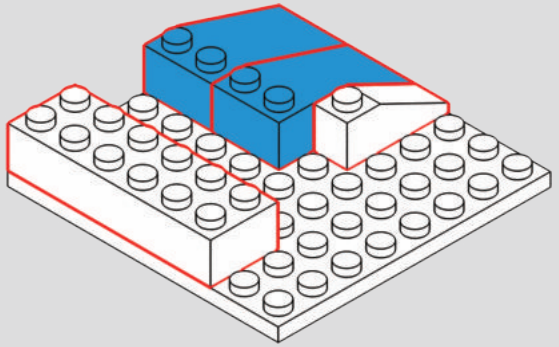

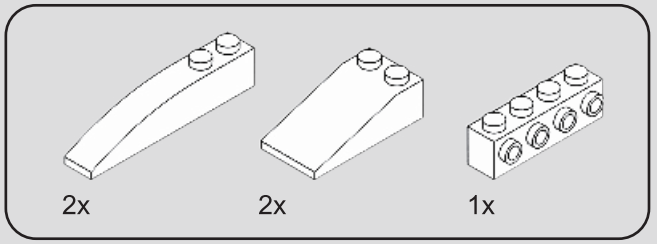

173

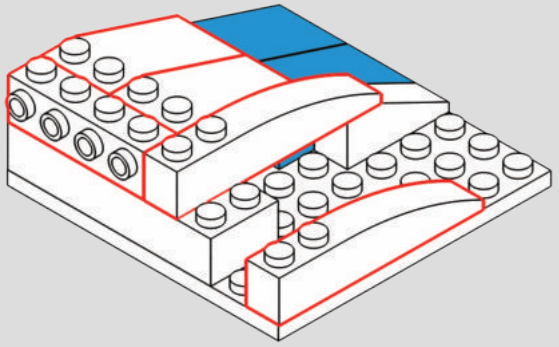

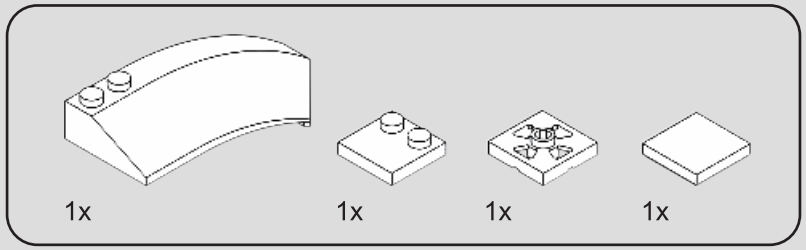

174

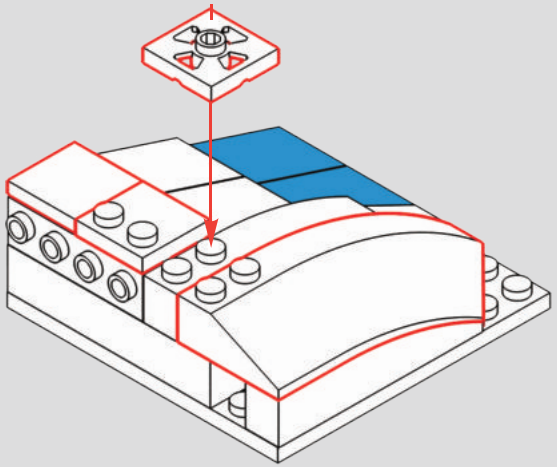

175

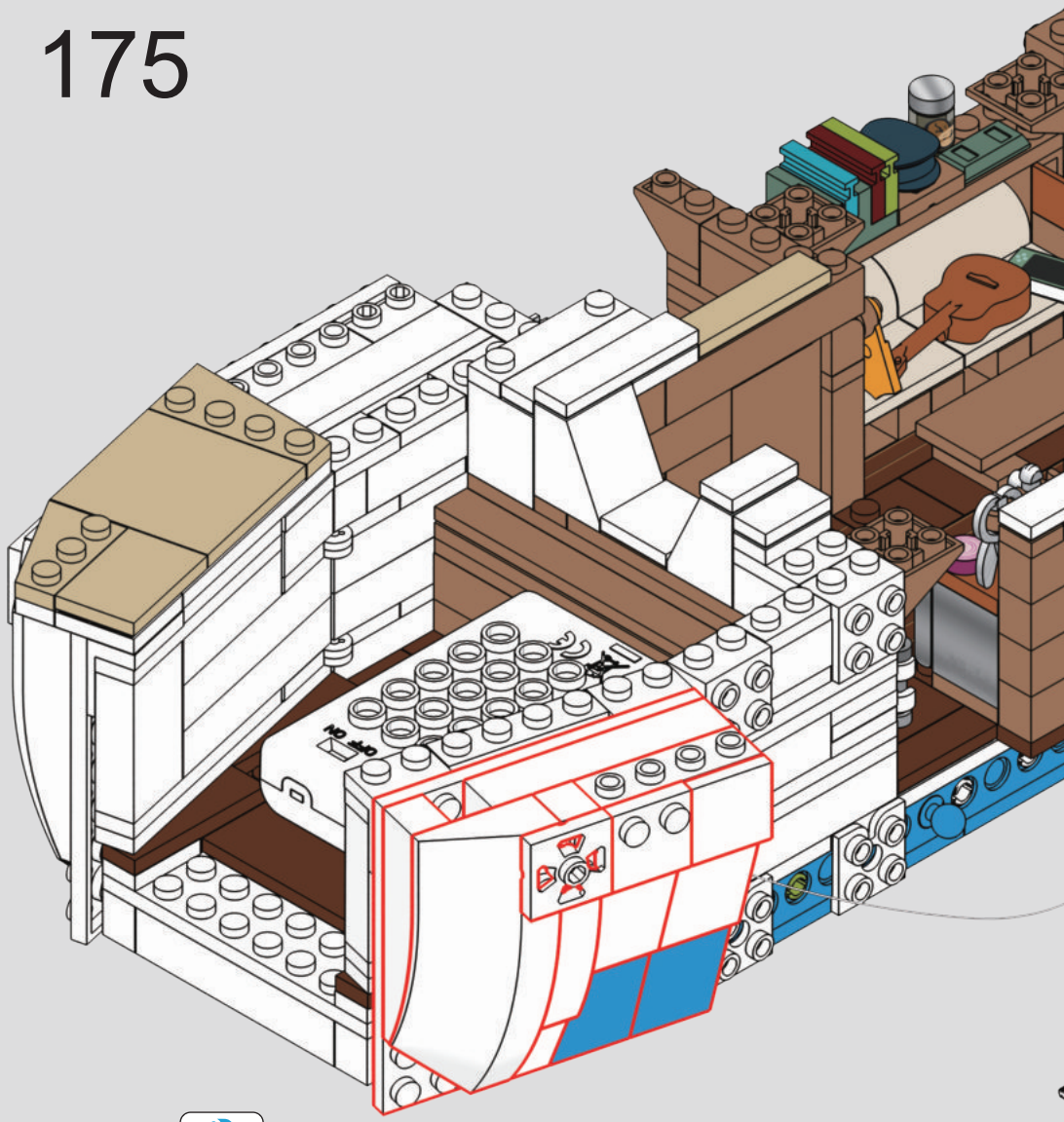

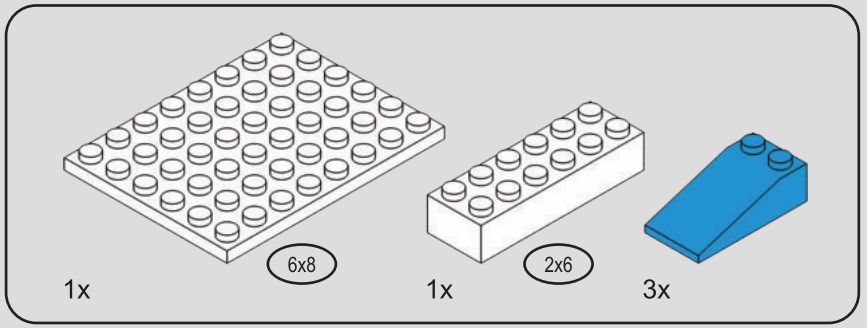

176

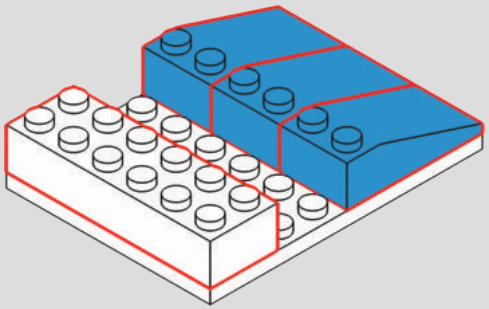

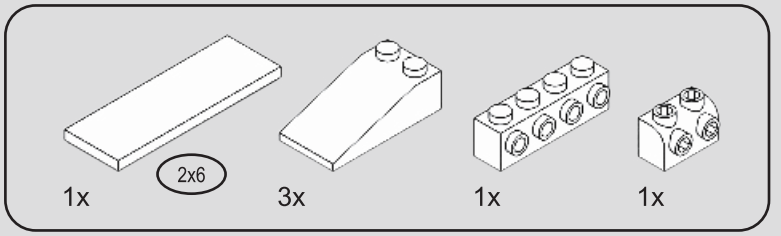

177

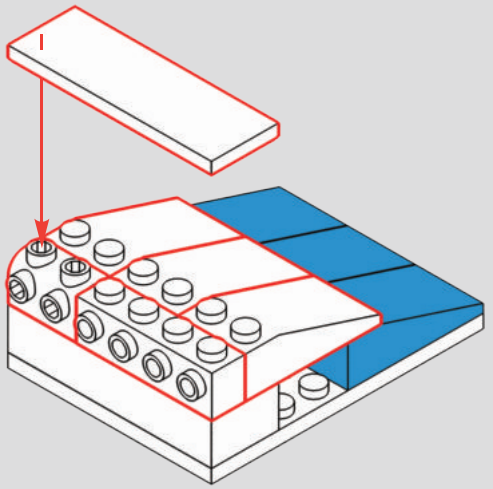

178

1

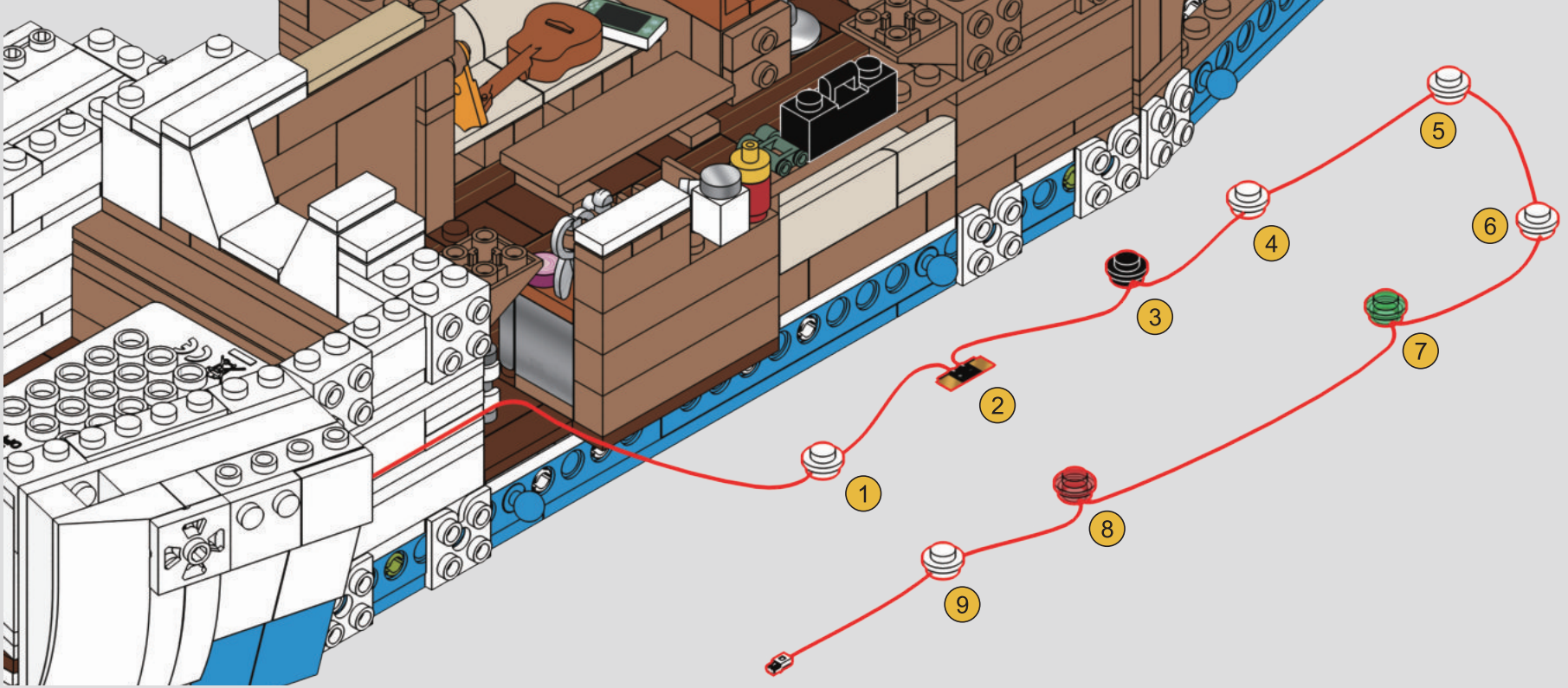

2

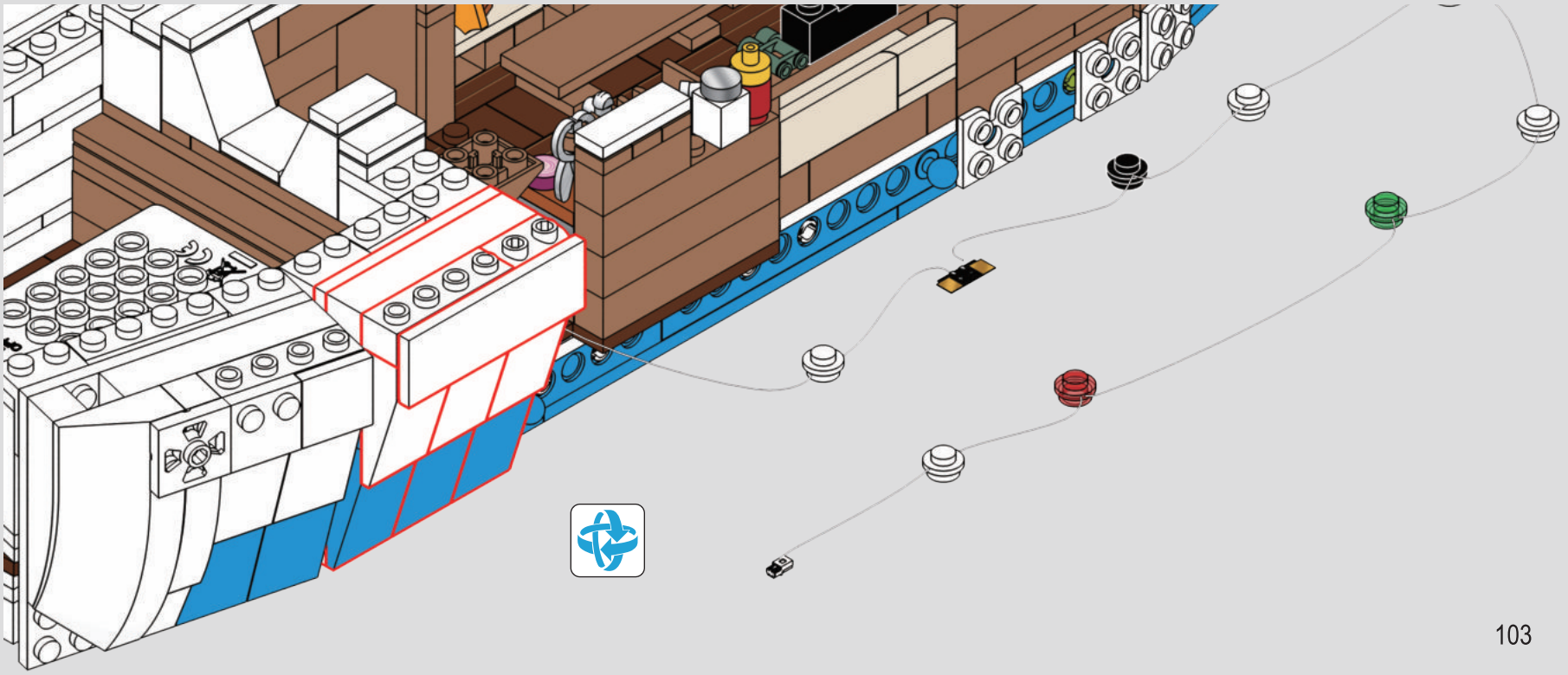

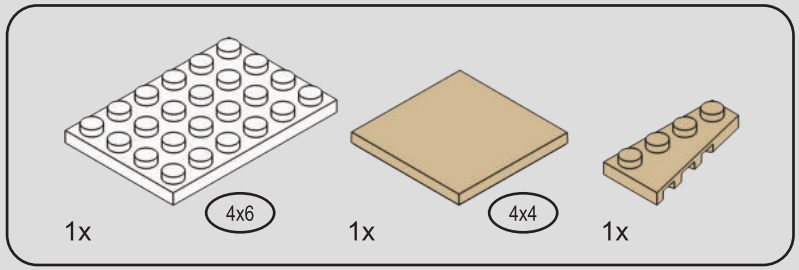

179

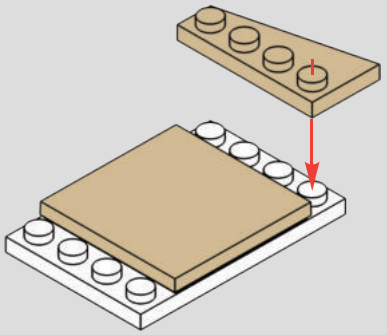

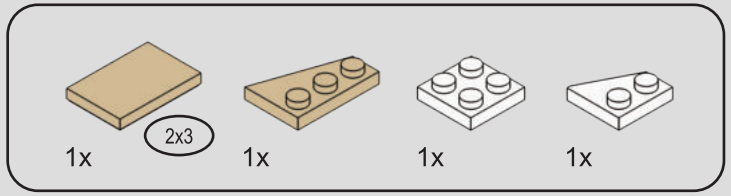

180

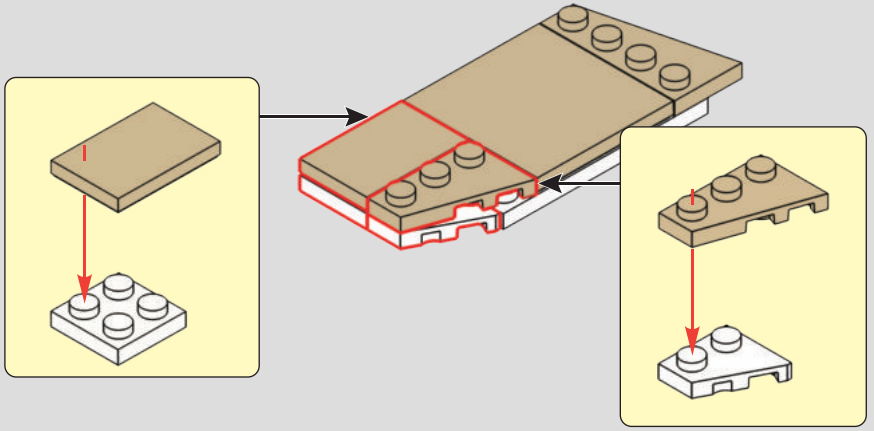

181

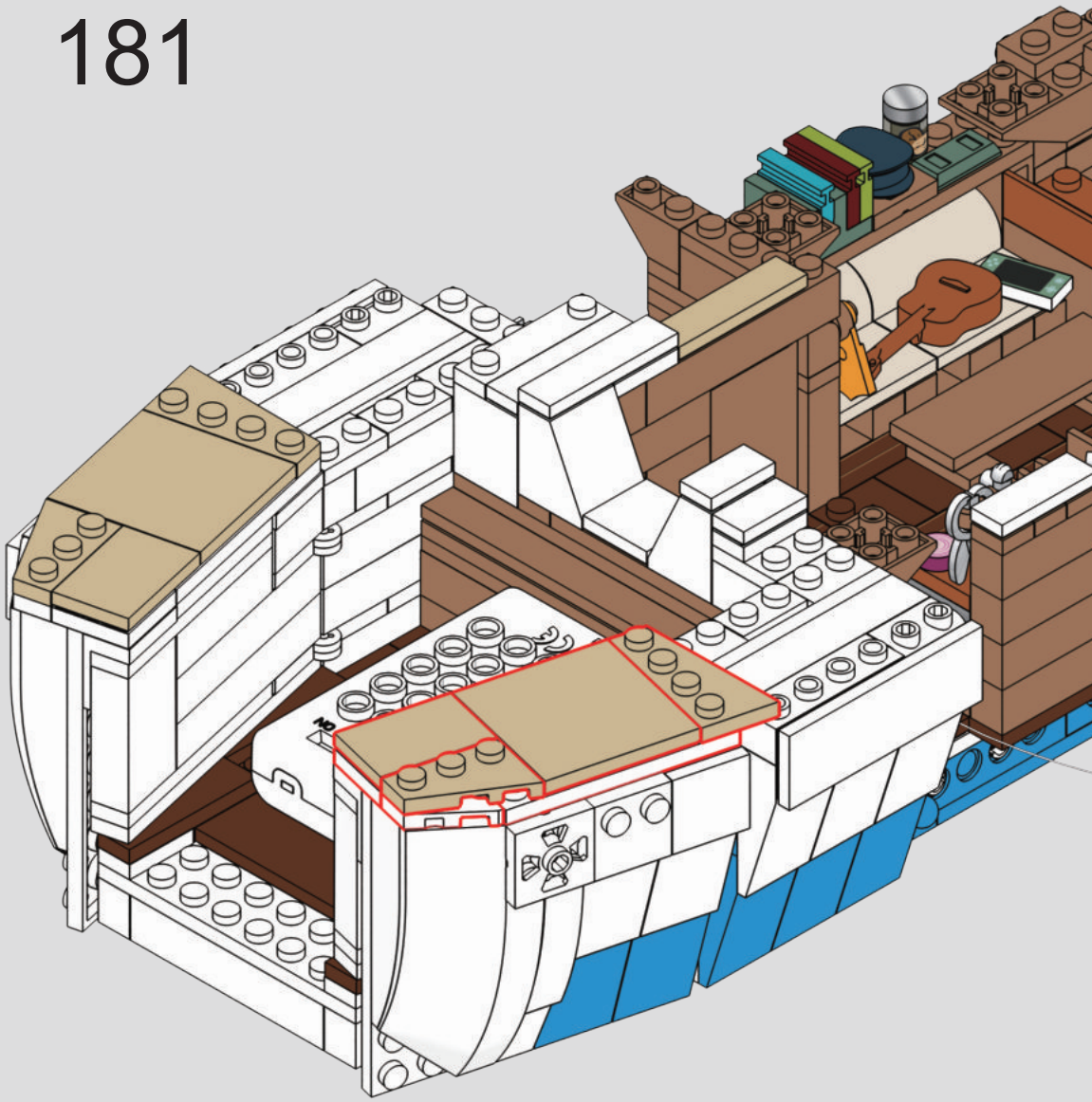

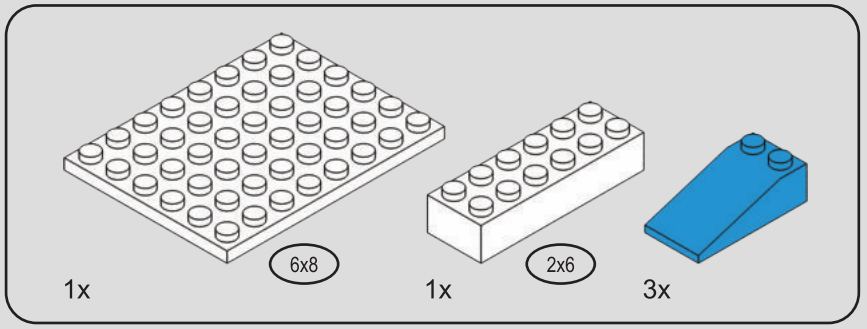

182

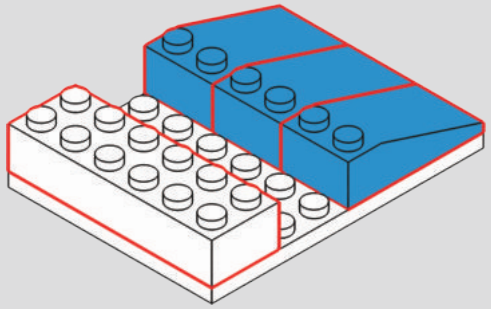

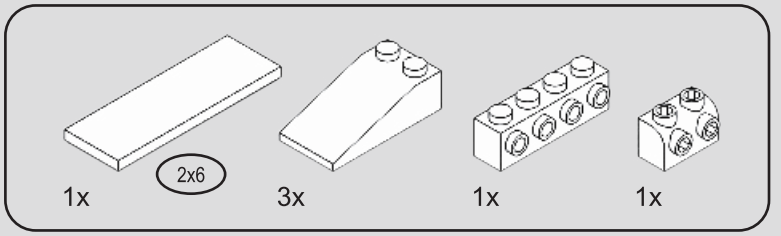

183

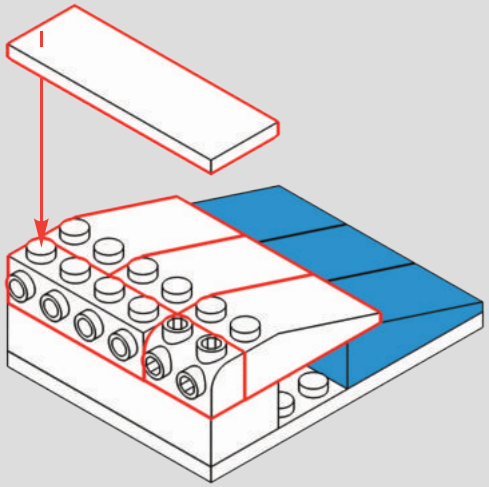

184

1

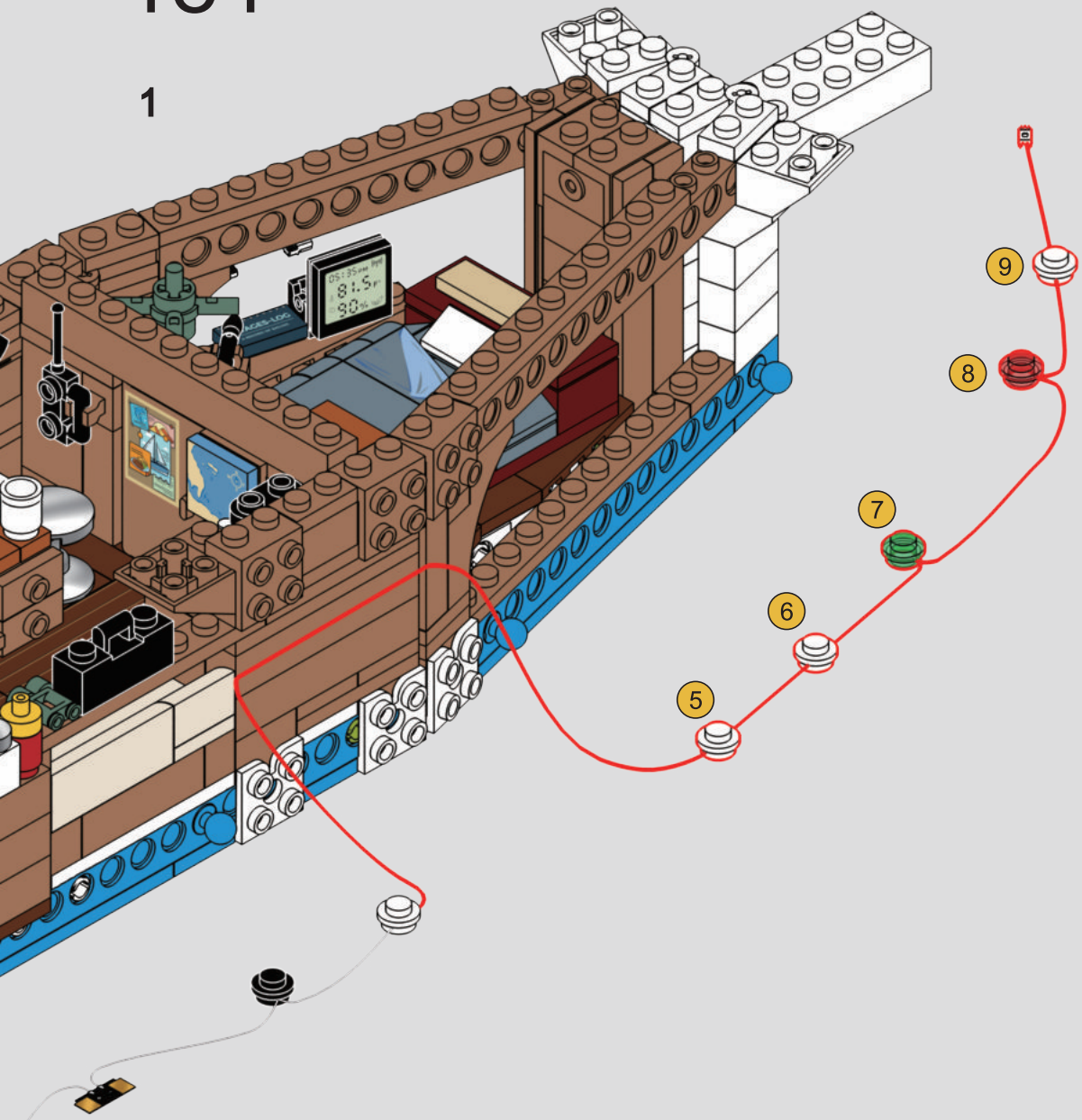

2

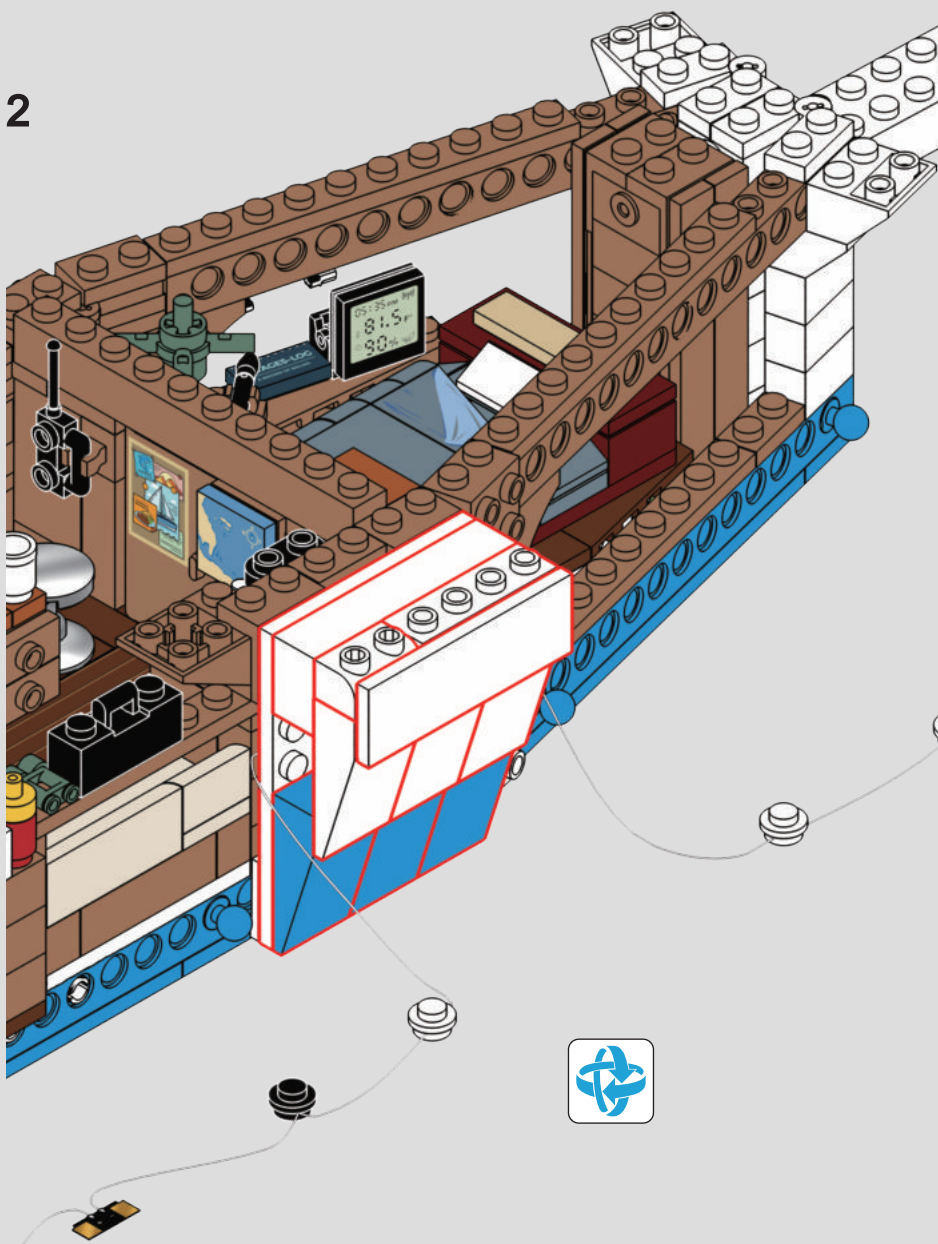

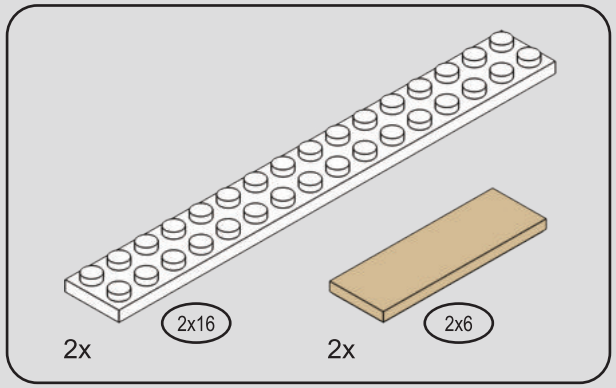

185

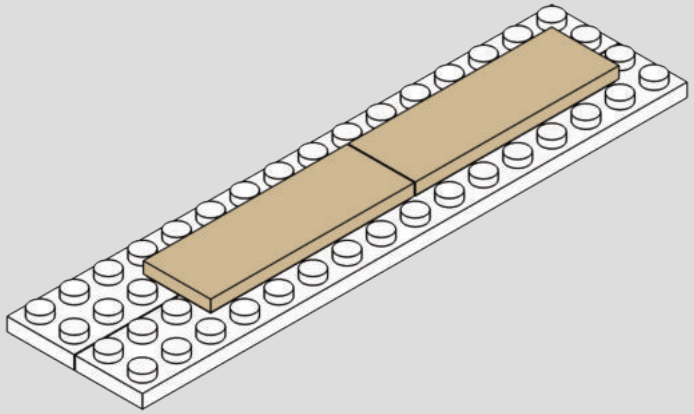

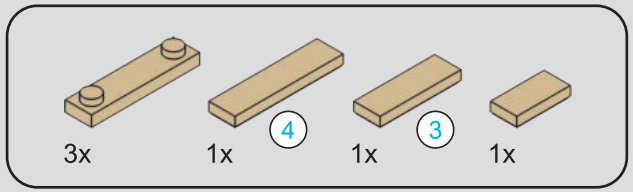

186

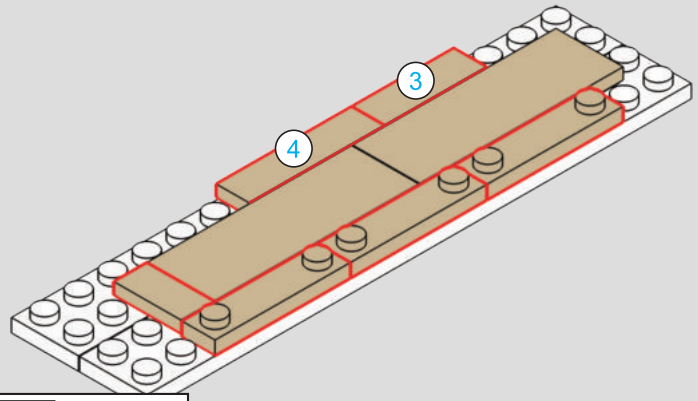

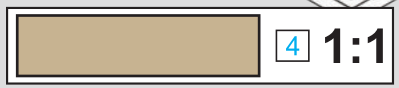

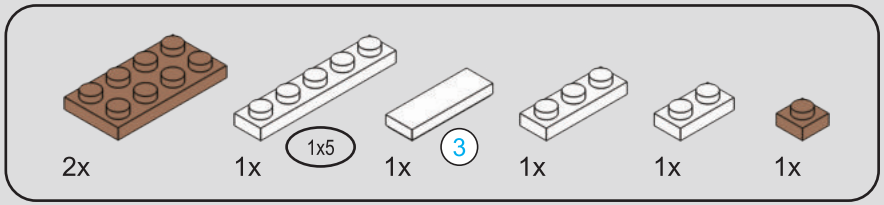

187

1

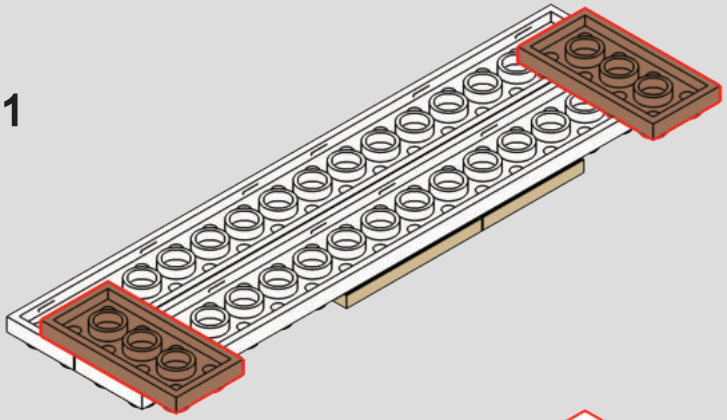

2

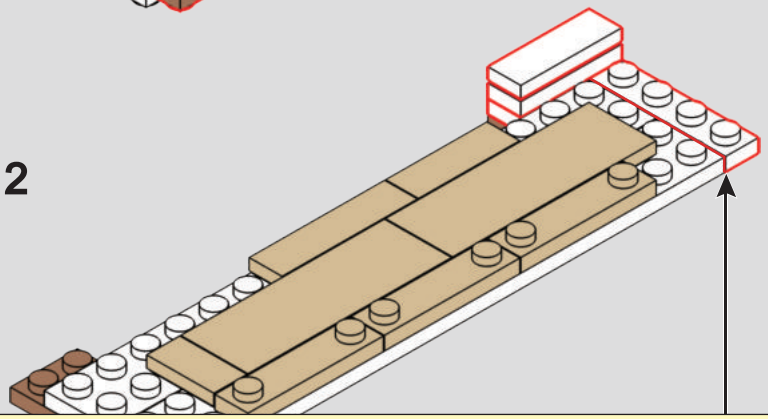

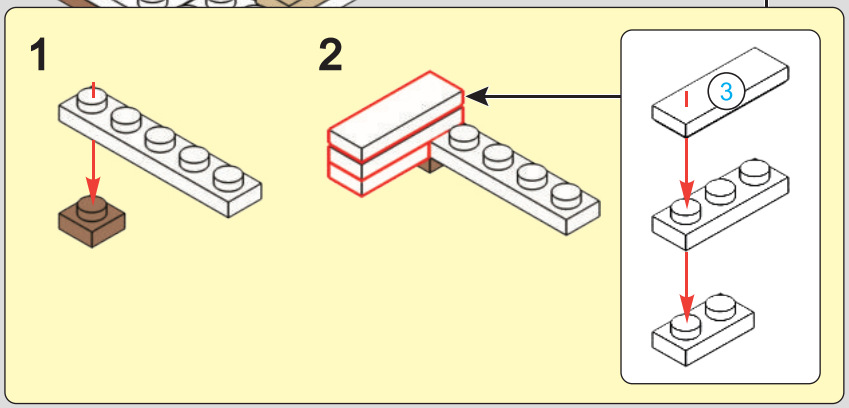

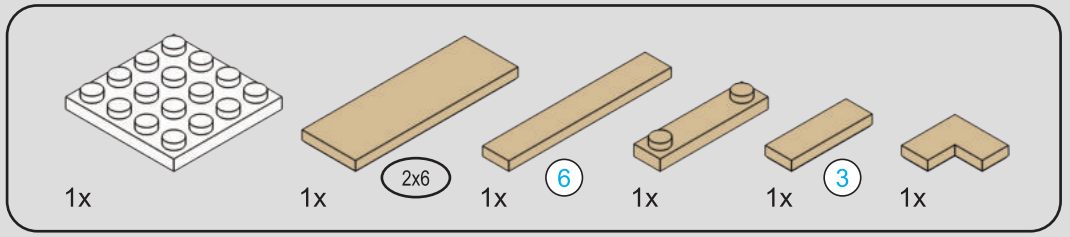



188

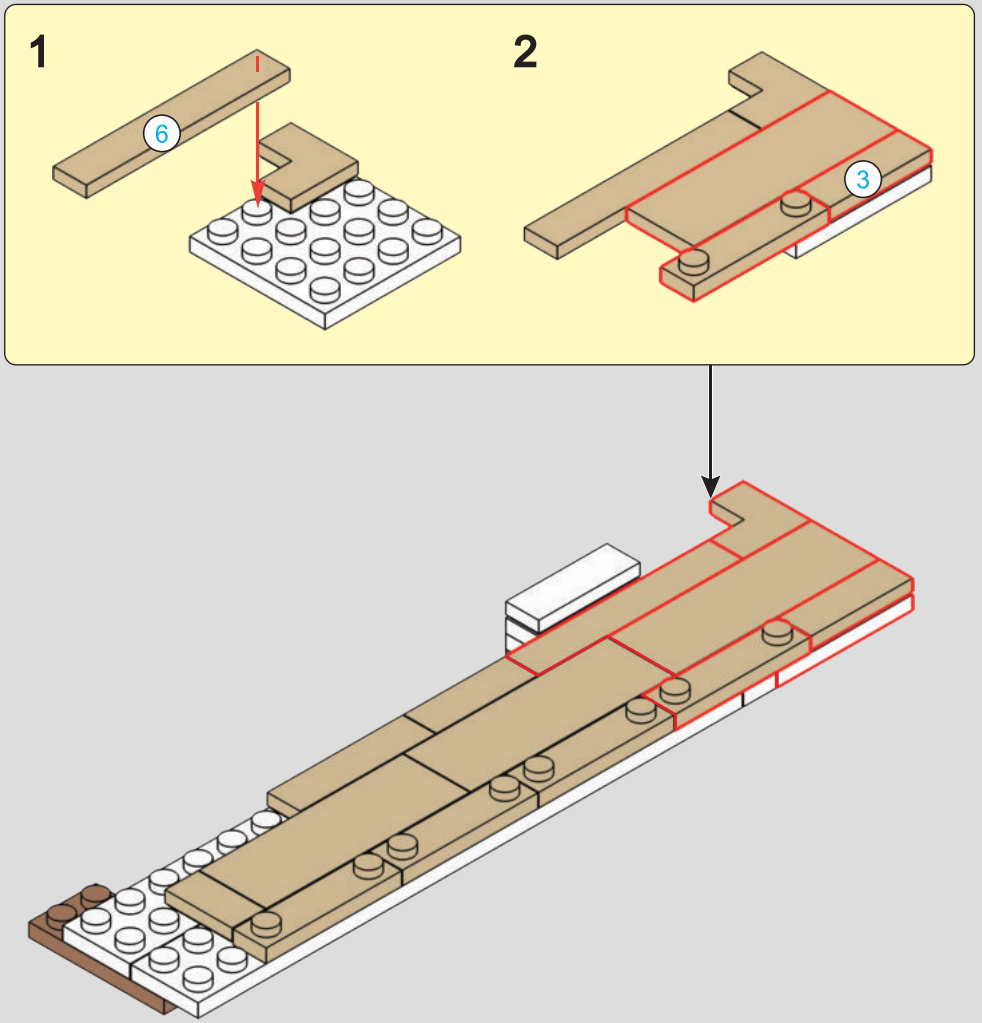

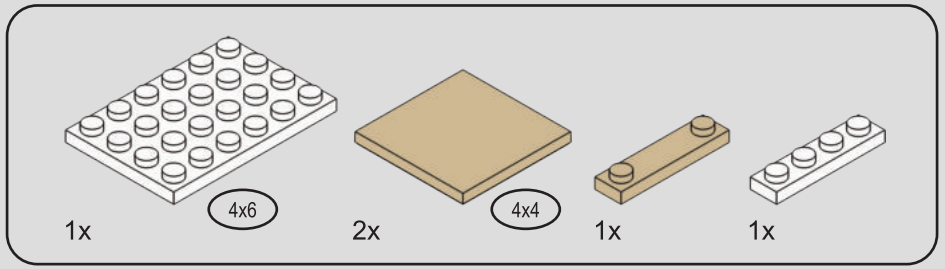

189

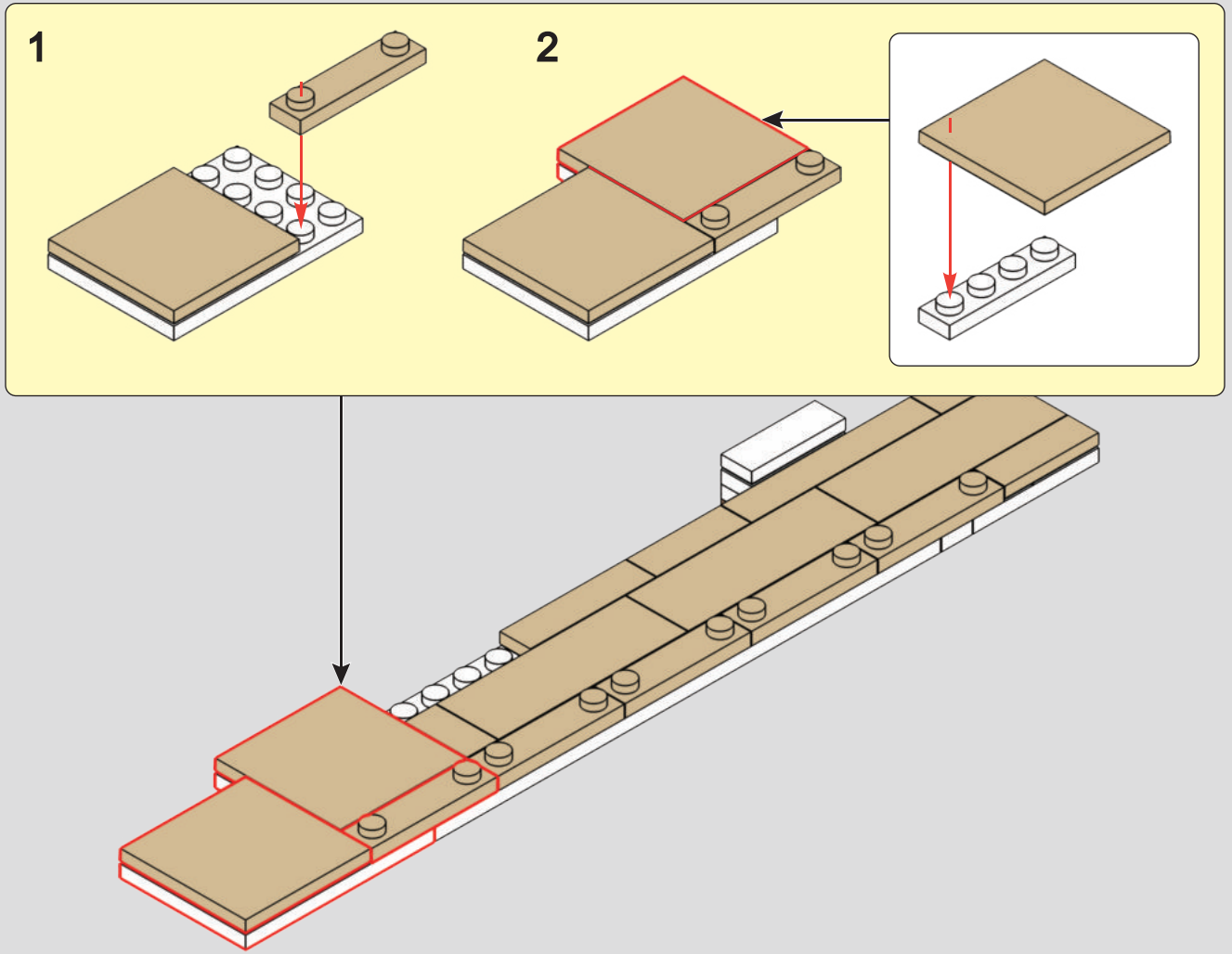

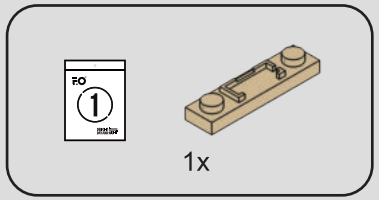

190

1

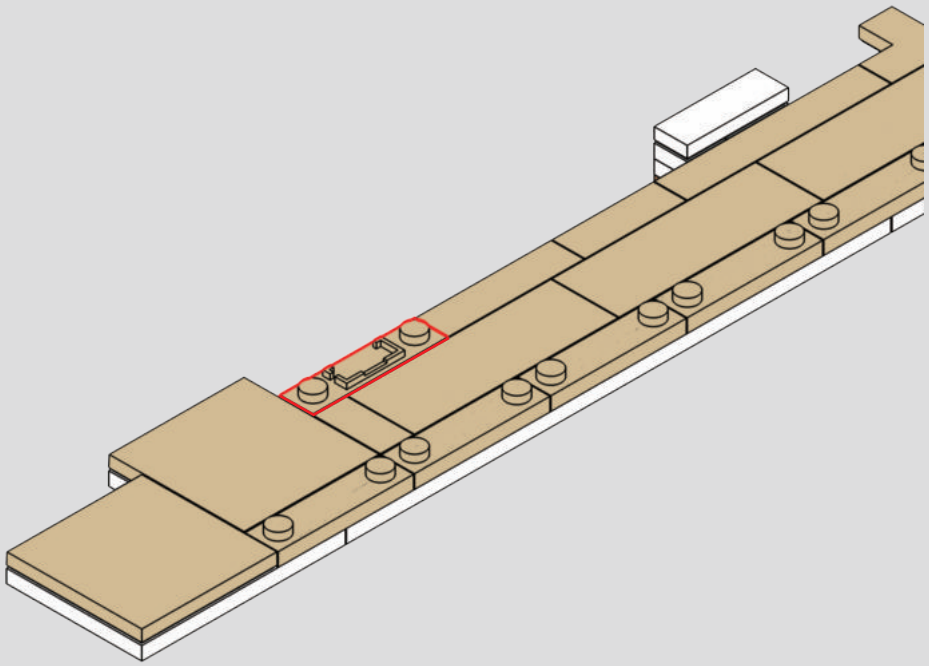

2

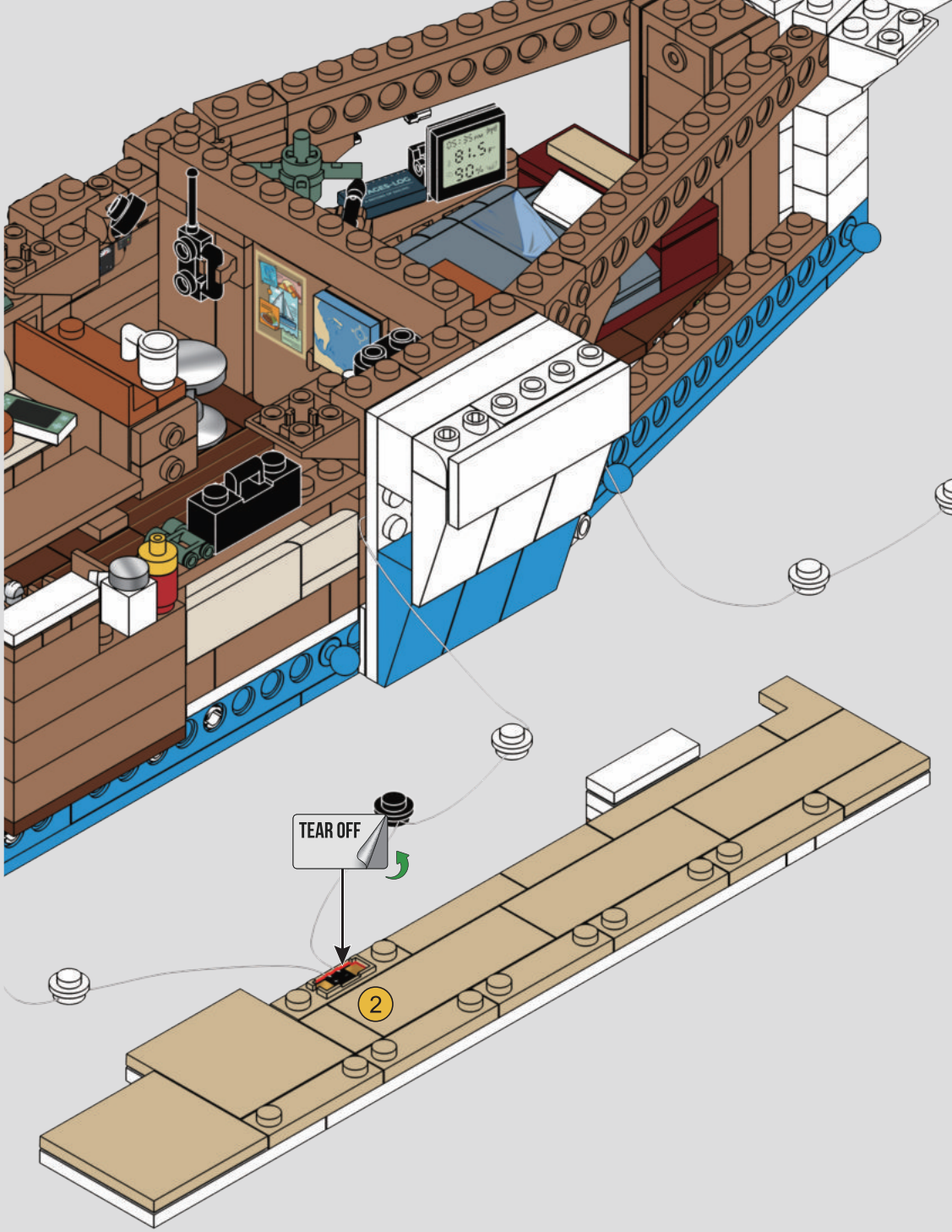

191

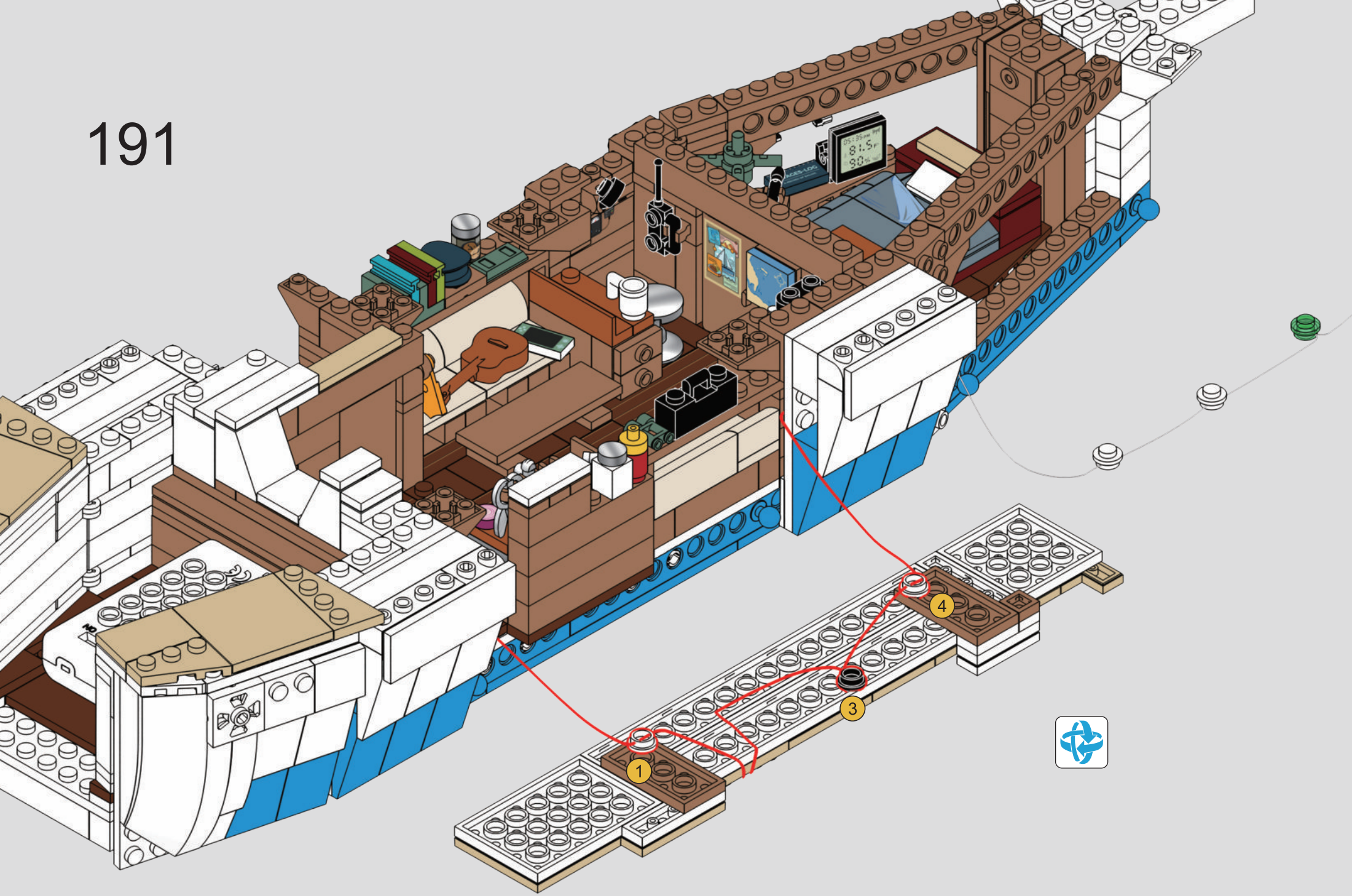

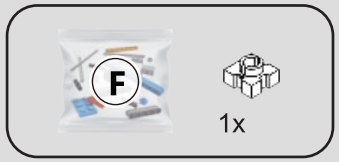

192

1

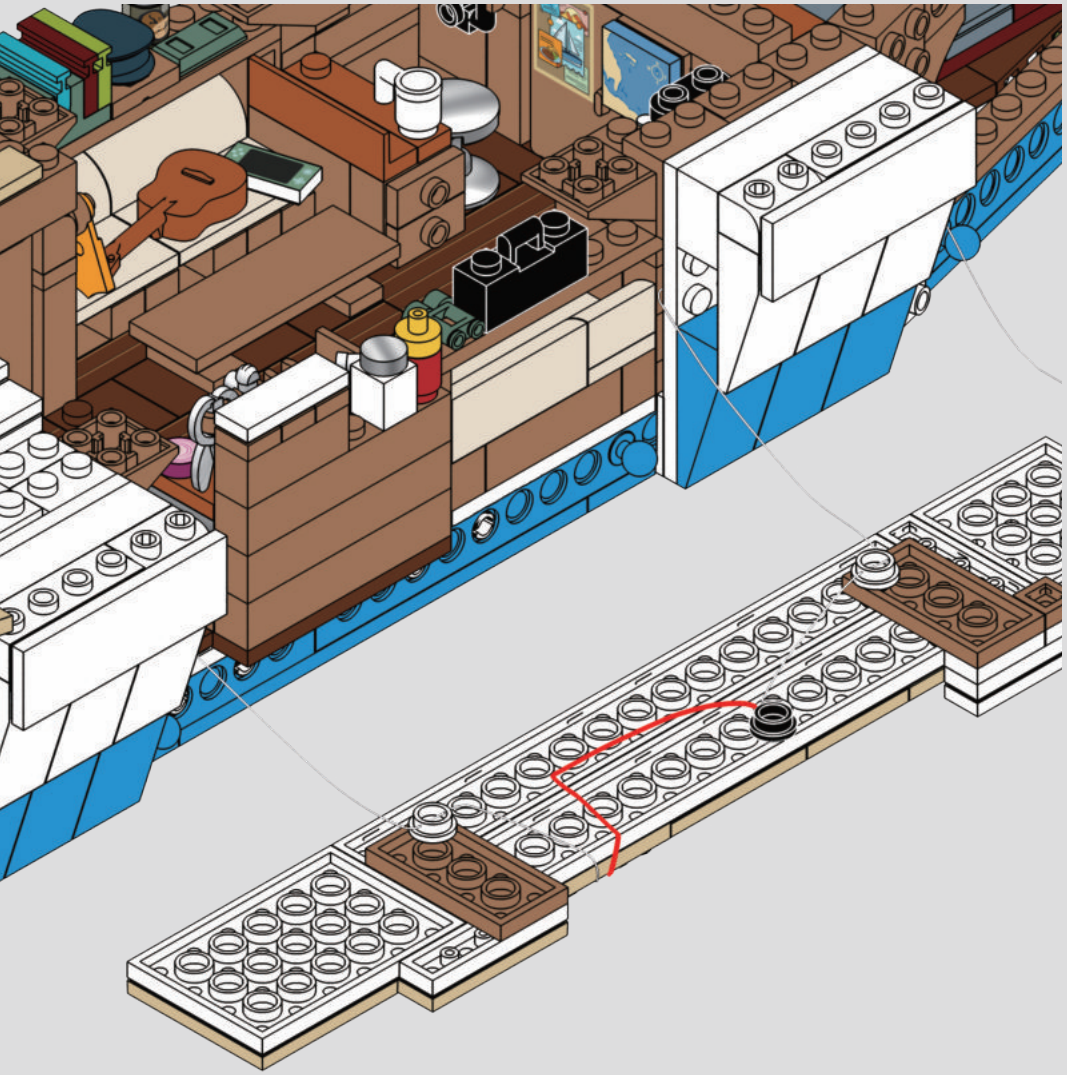

2

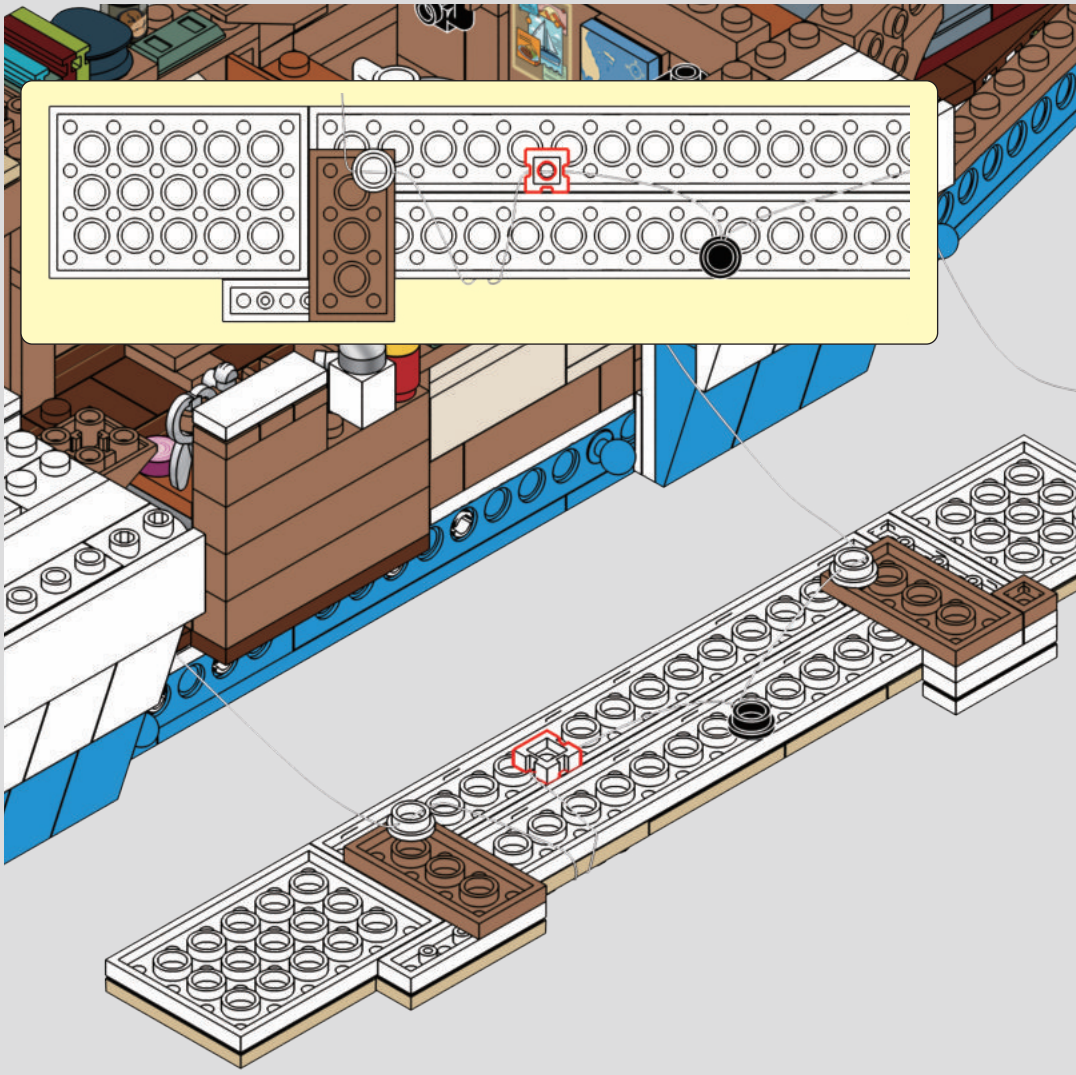

193

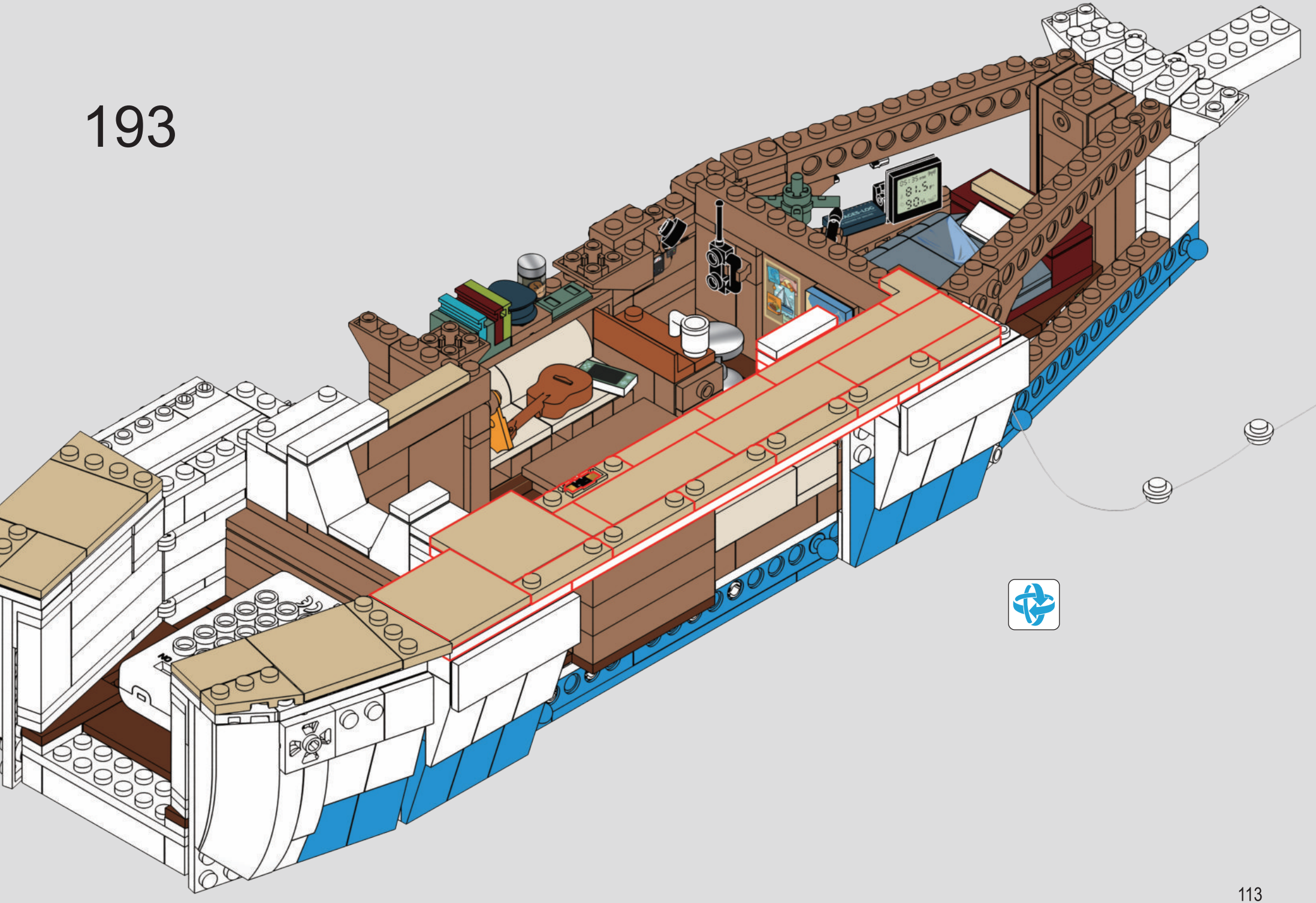

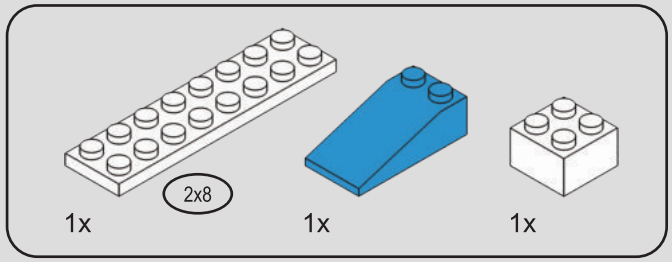

194

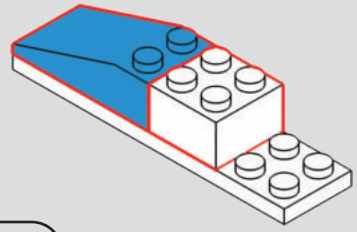

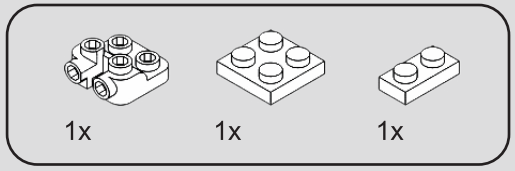

195

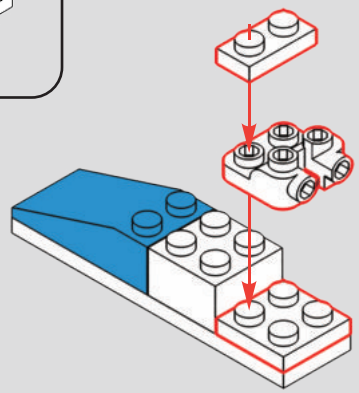

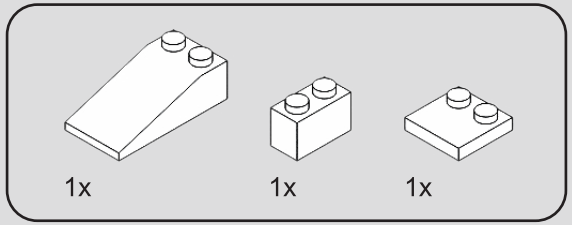

196

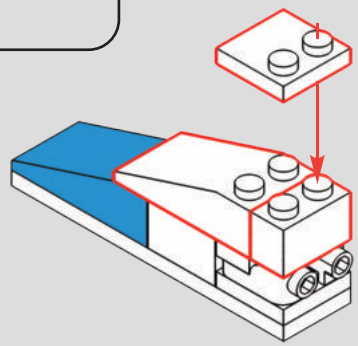

197

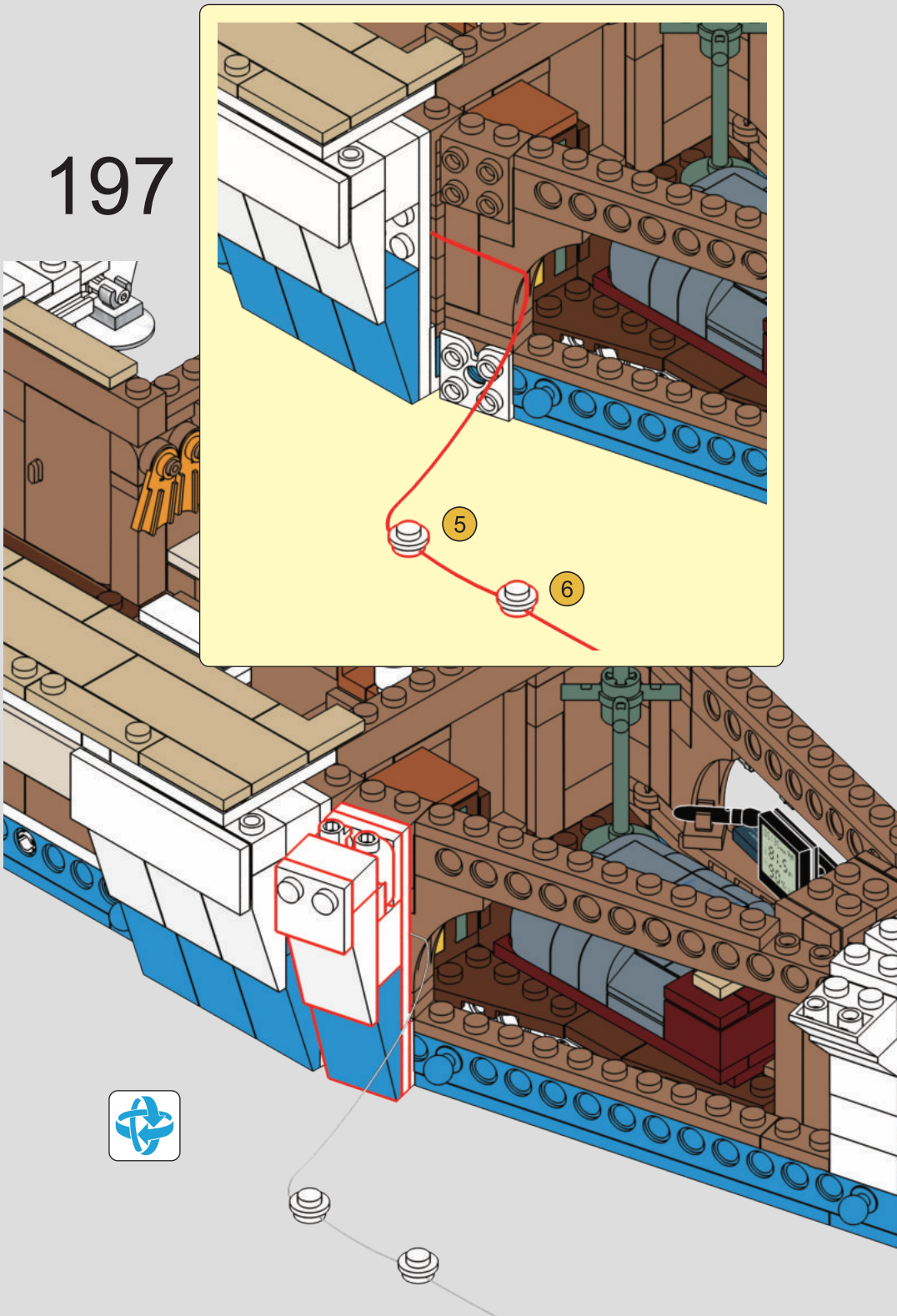

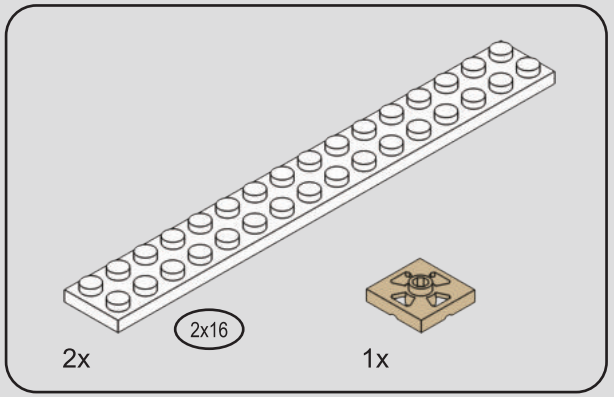
2x16
2x
1x

198

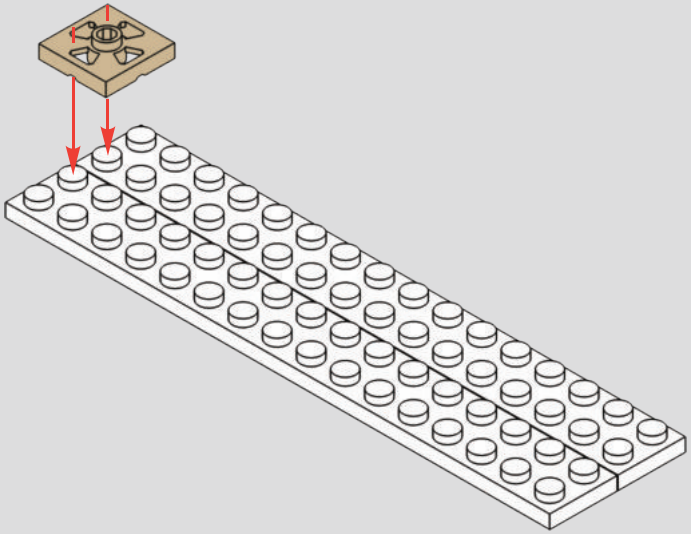

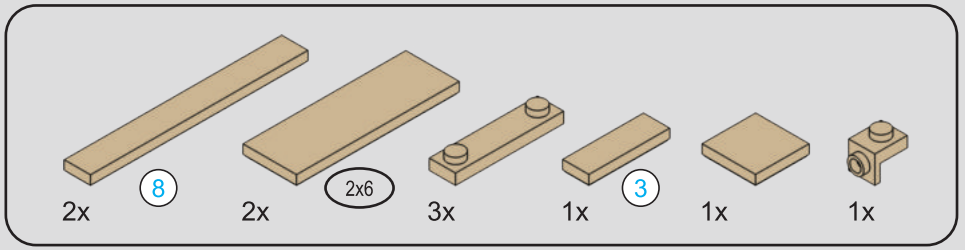
2x
8
2x
2x6
3x
1x
3
1x
1x

199

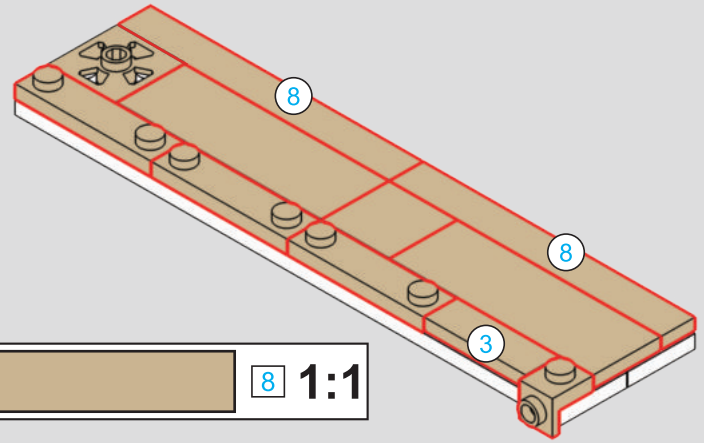
8
8
3

8
1:1

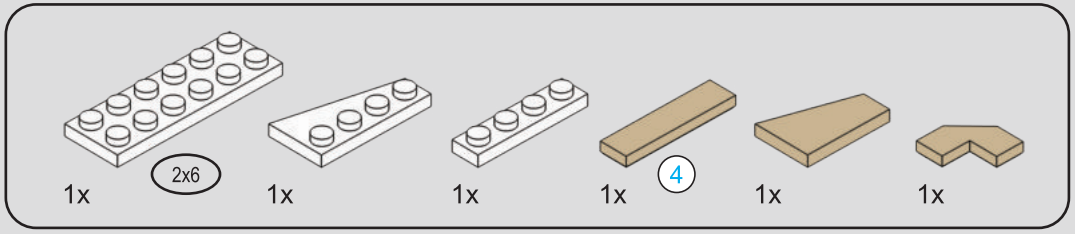
1x
2x6
1x
1x
1x
4
1x
1x

200


4
1:1

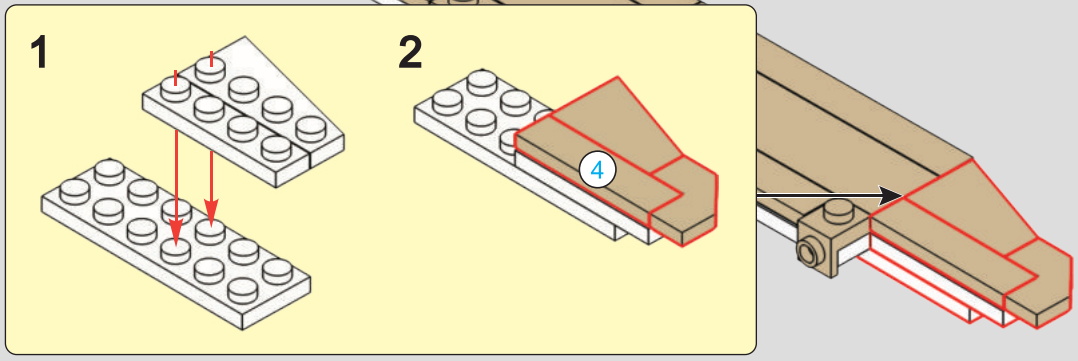
1
2
4

201

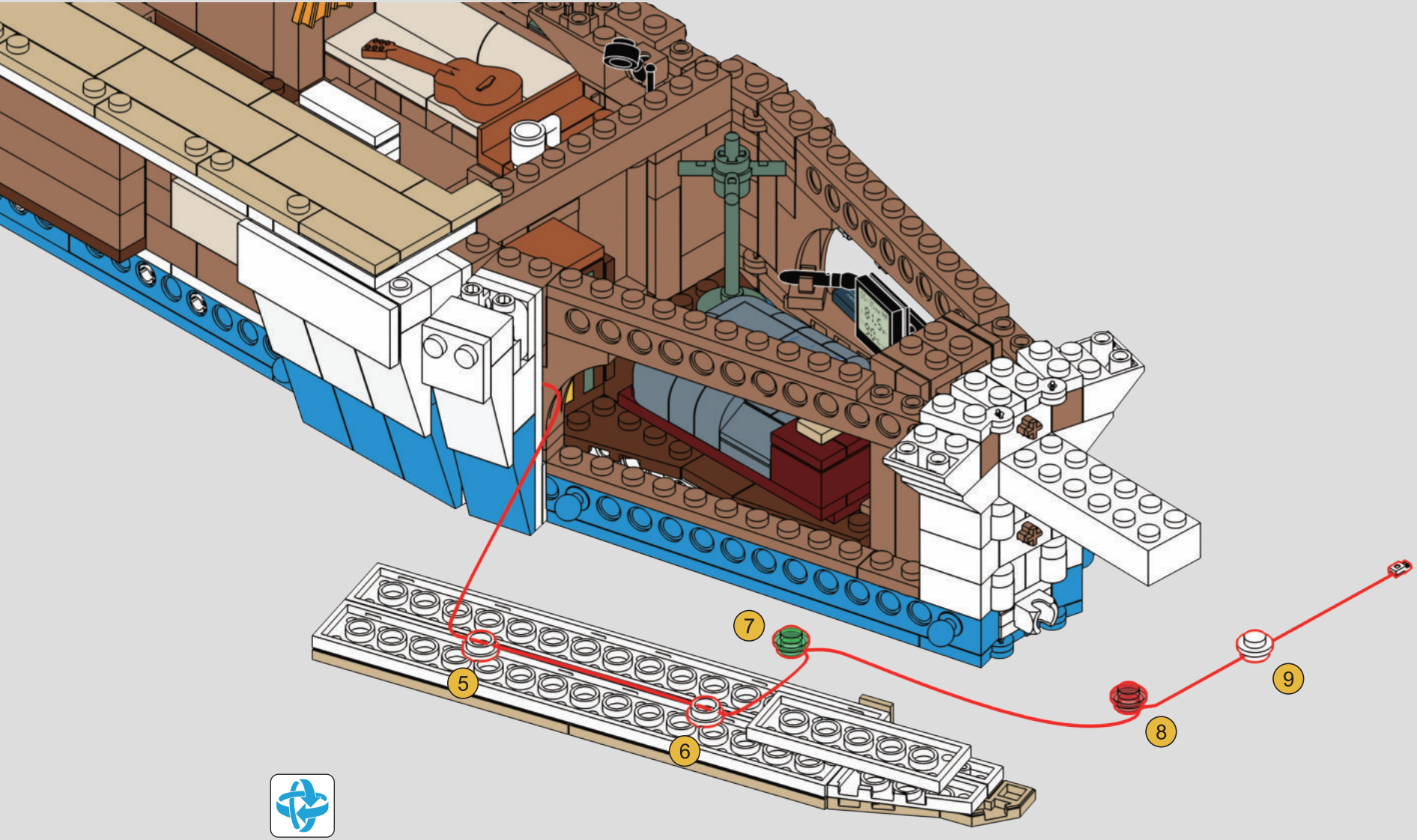



202

1

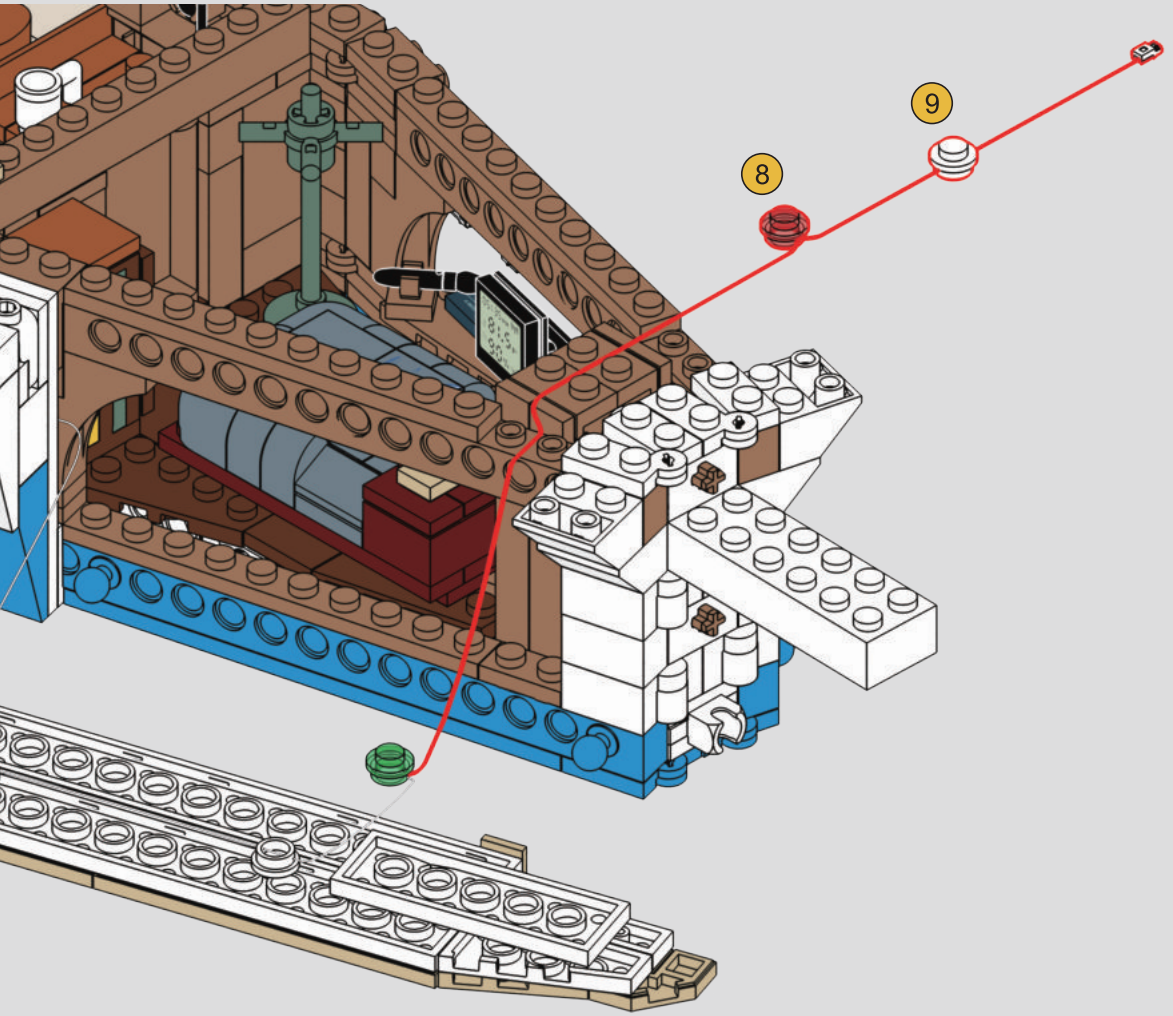

2

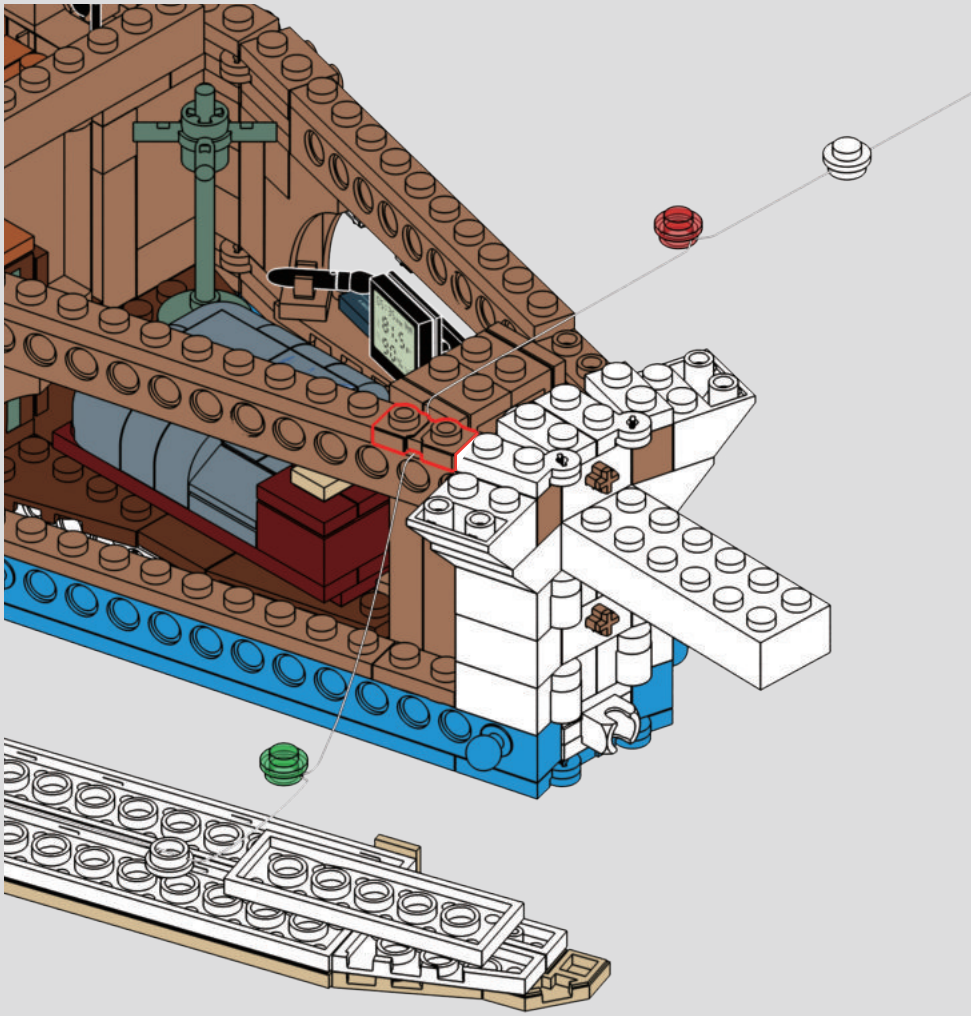

203

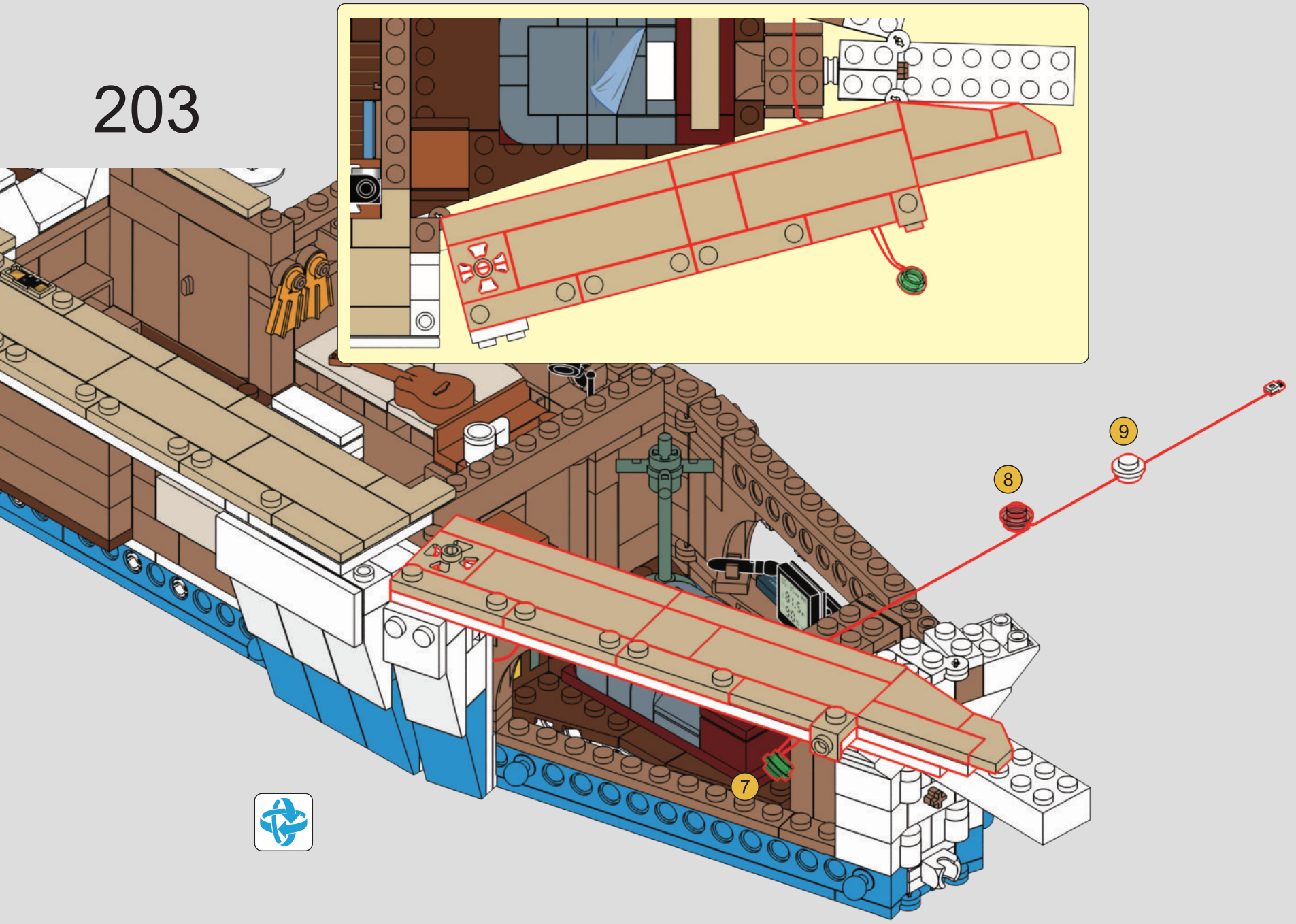

204

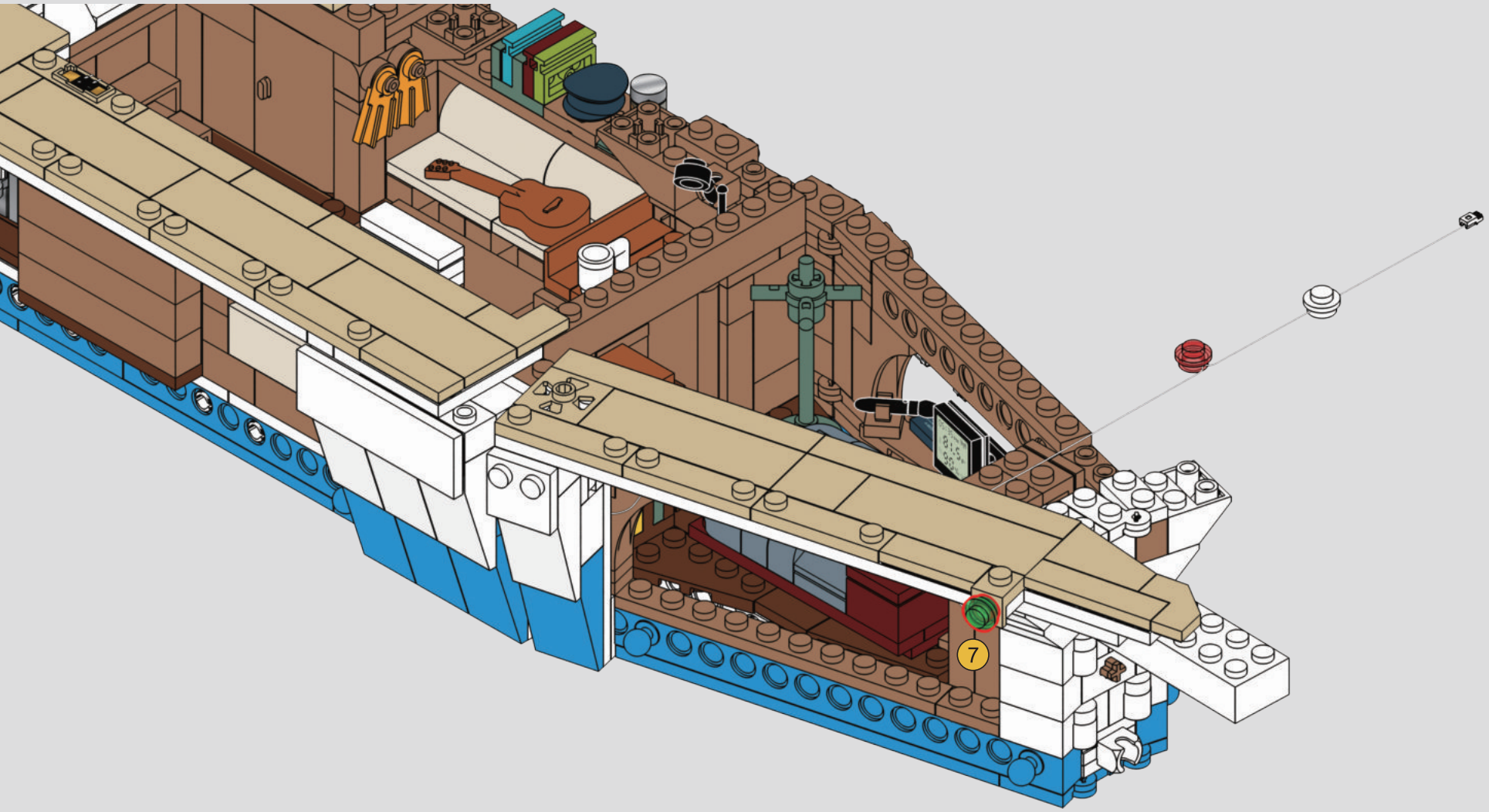

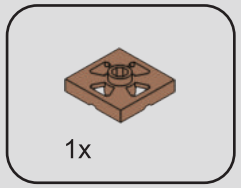

205

1

2

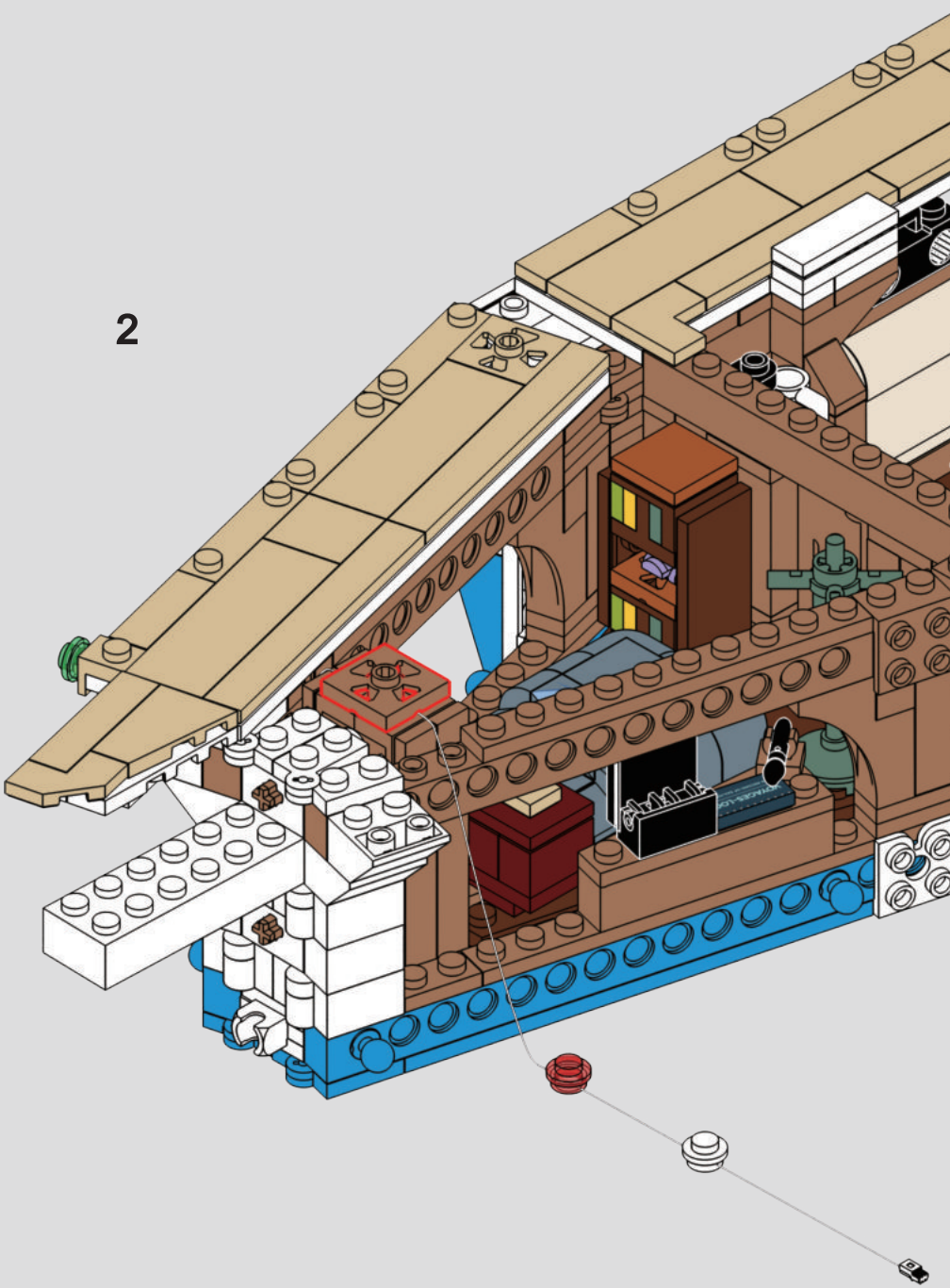

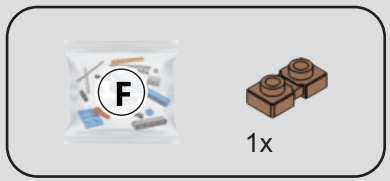

206

1

2

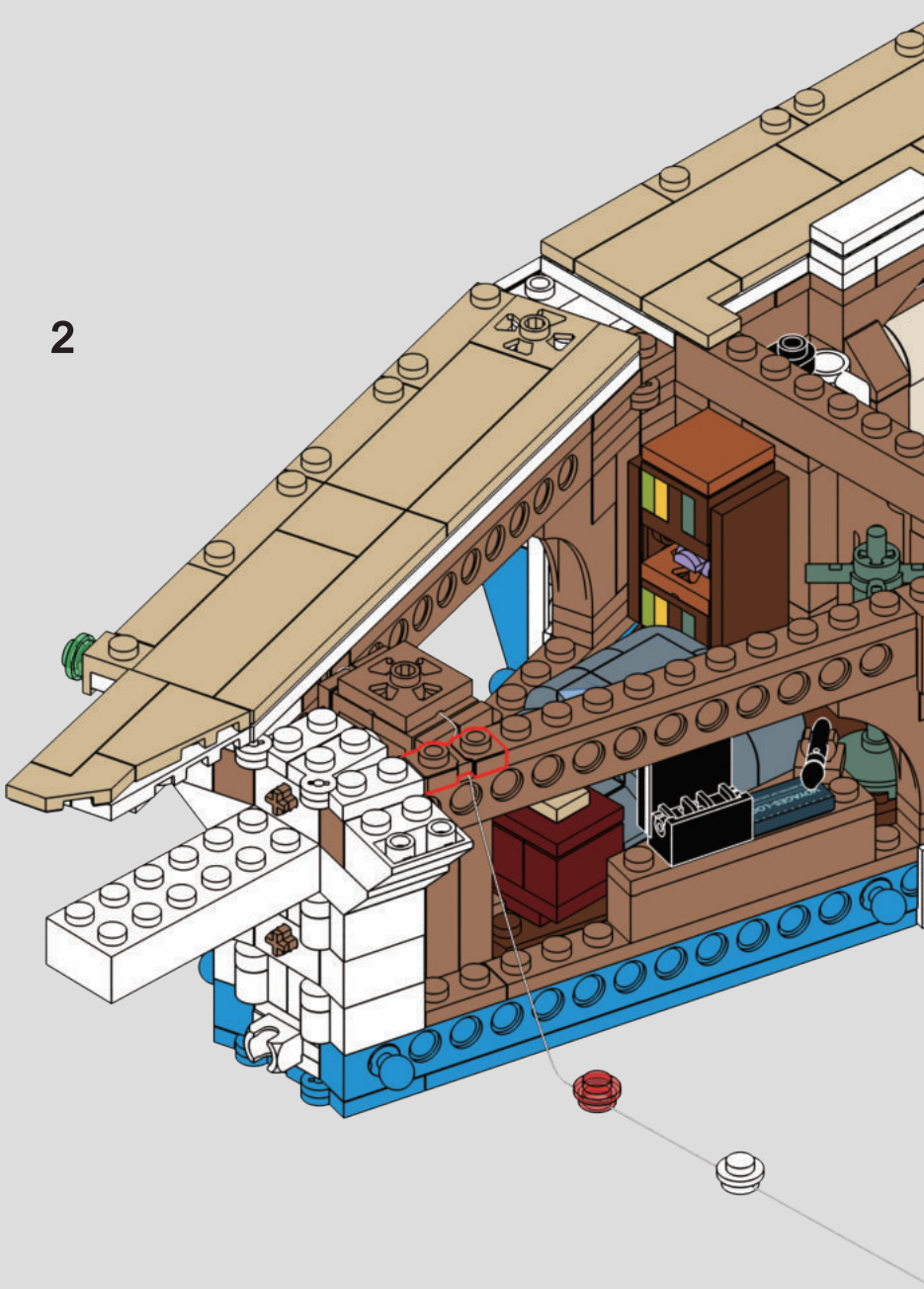

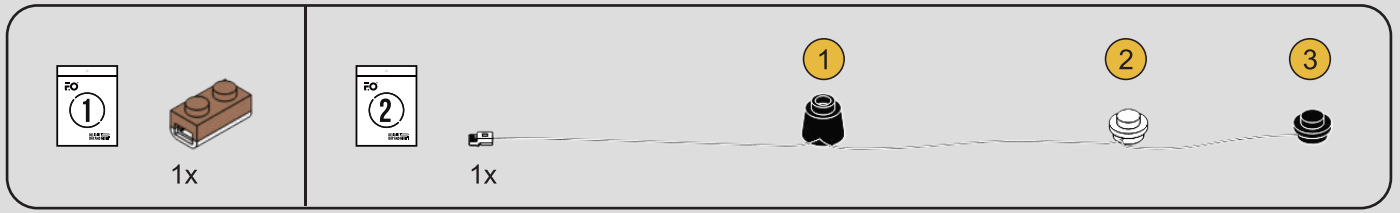

207

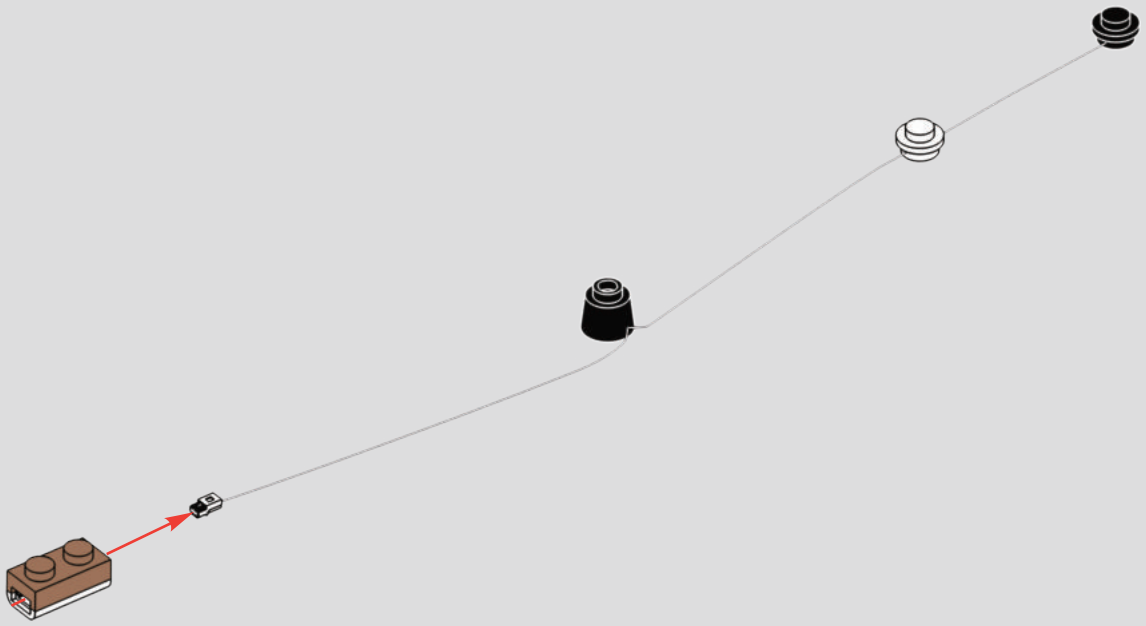

208

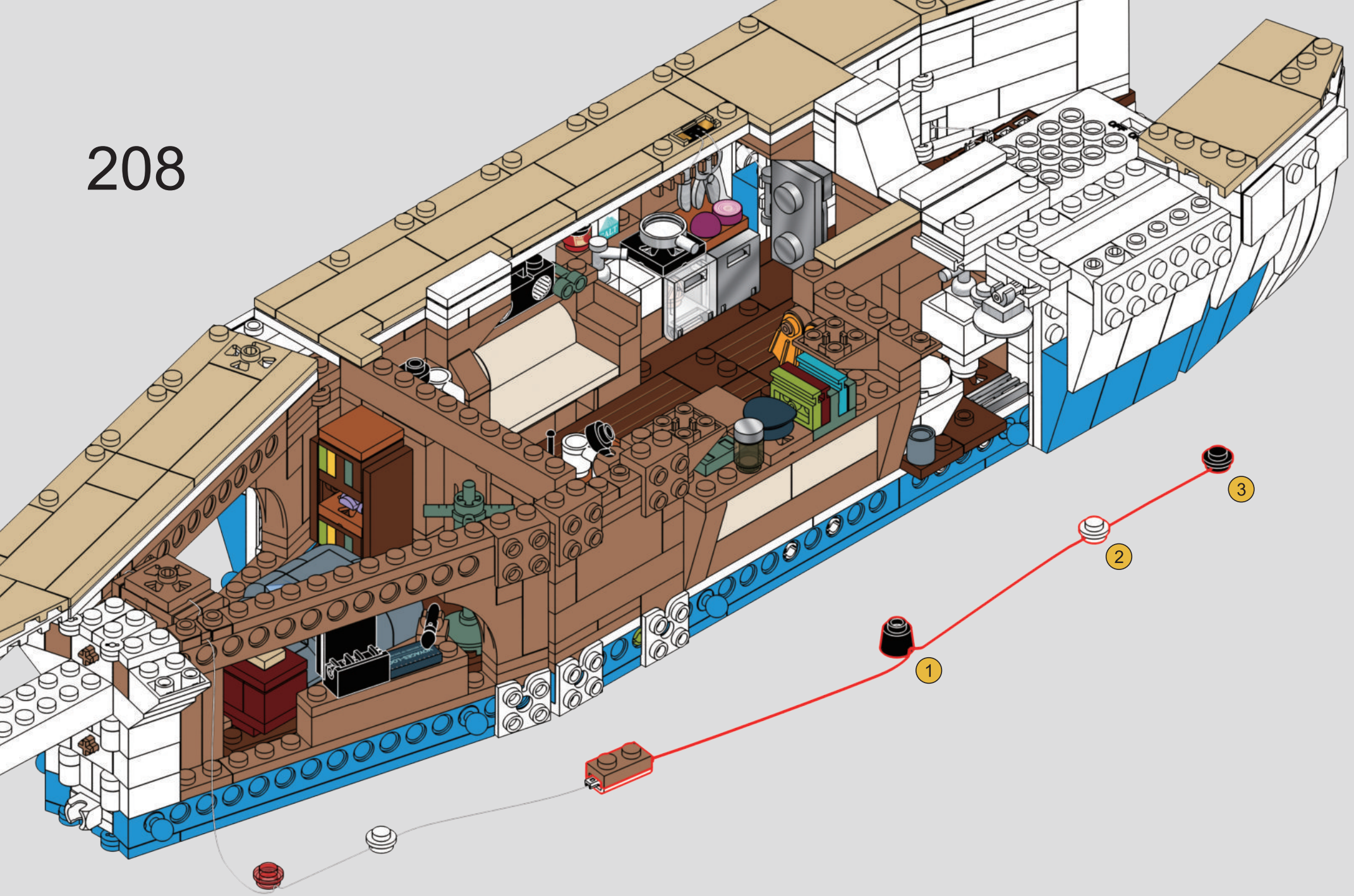

209

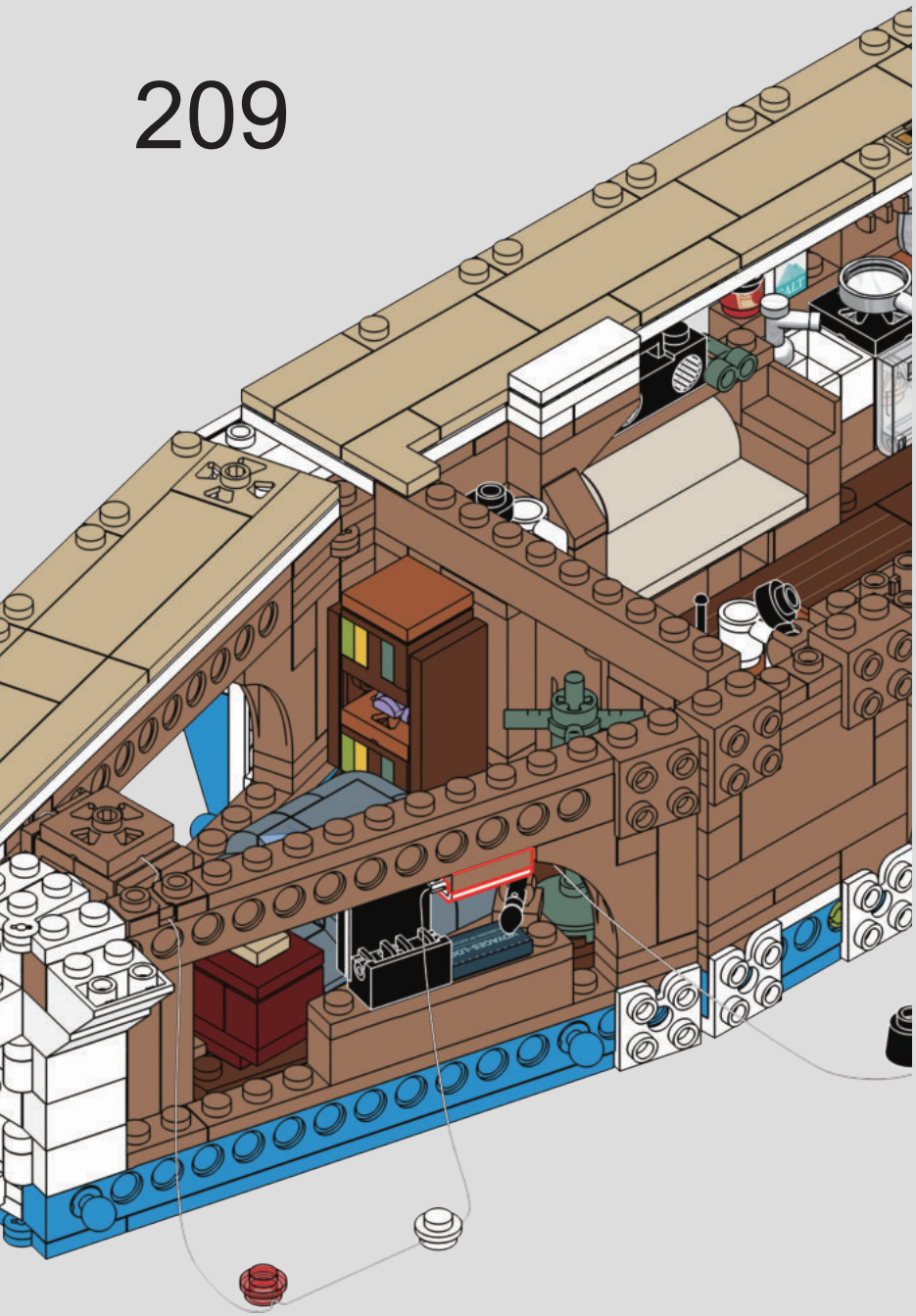

210

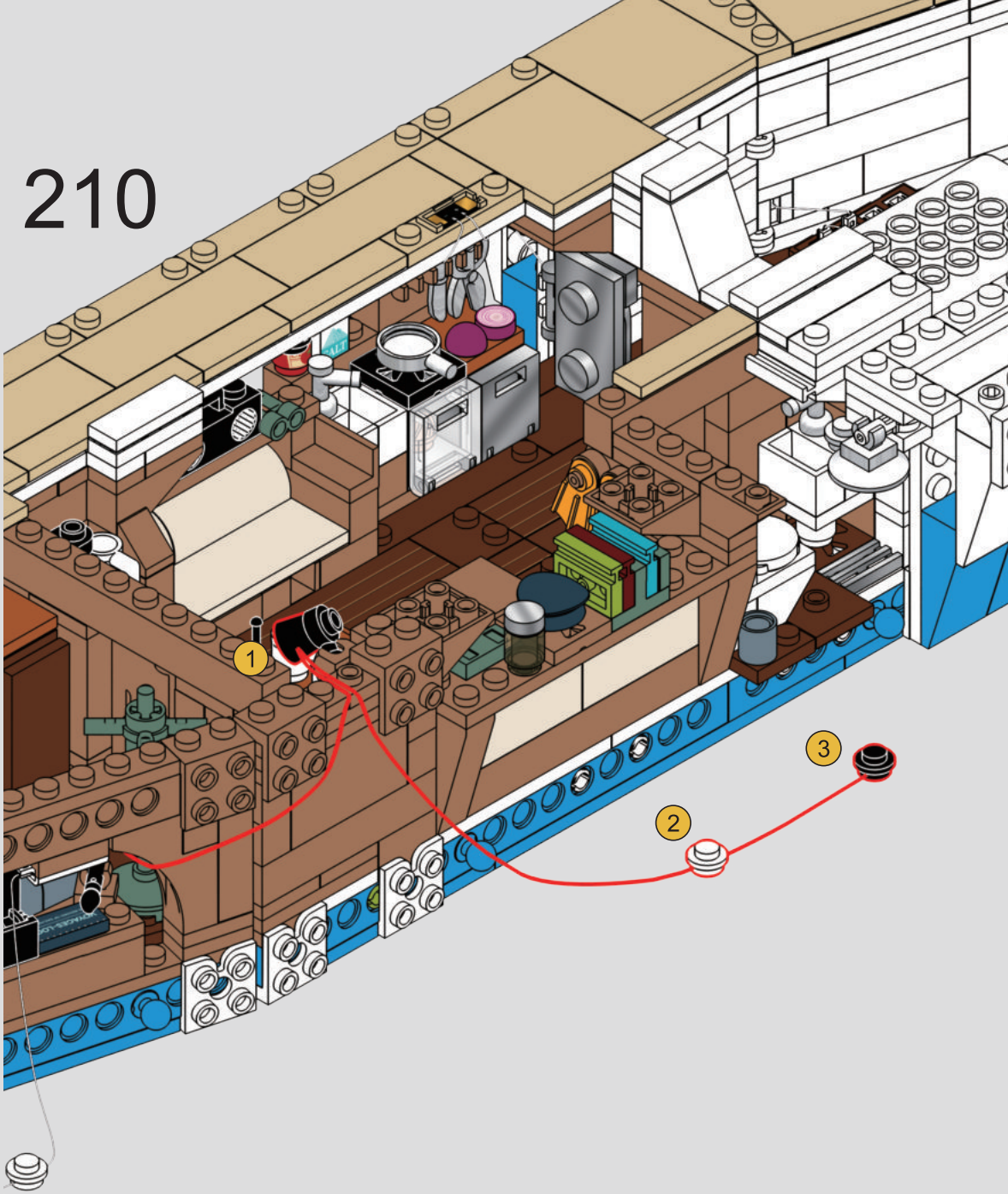

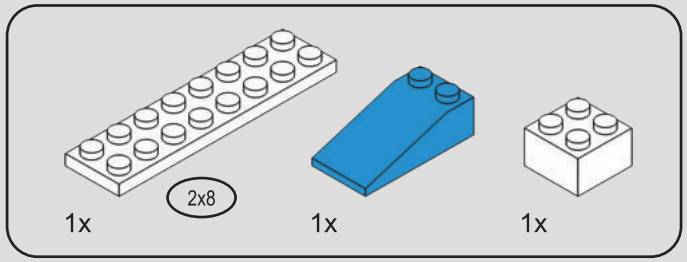

211

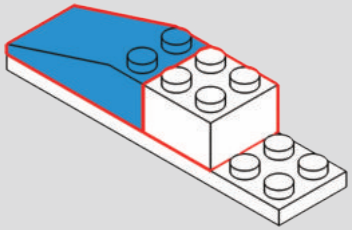

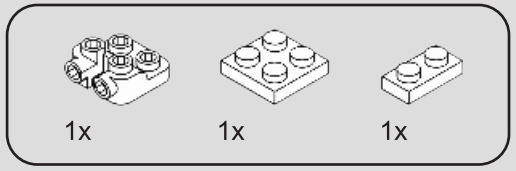

212

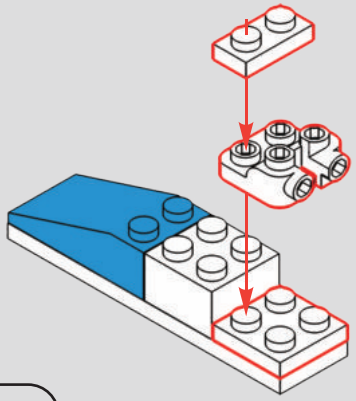

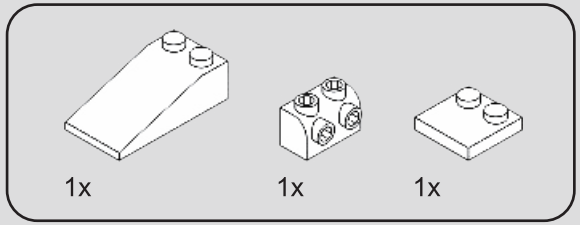

213

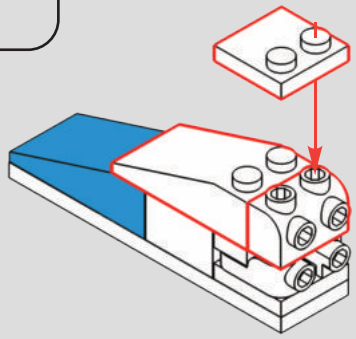

214





1x

215

1

2

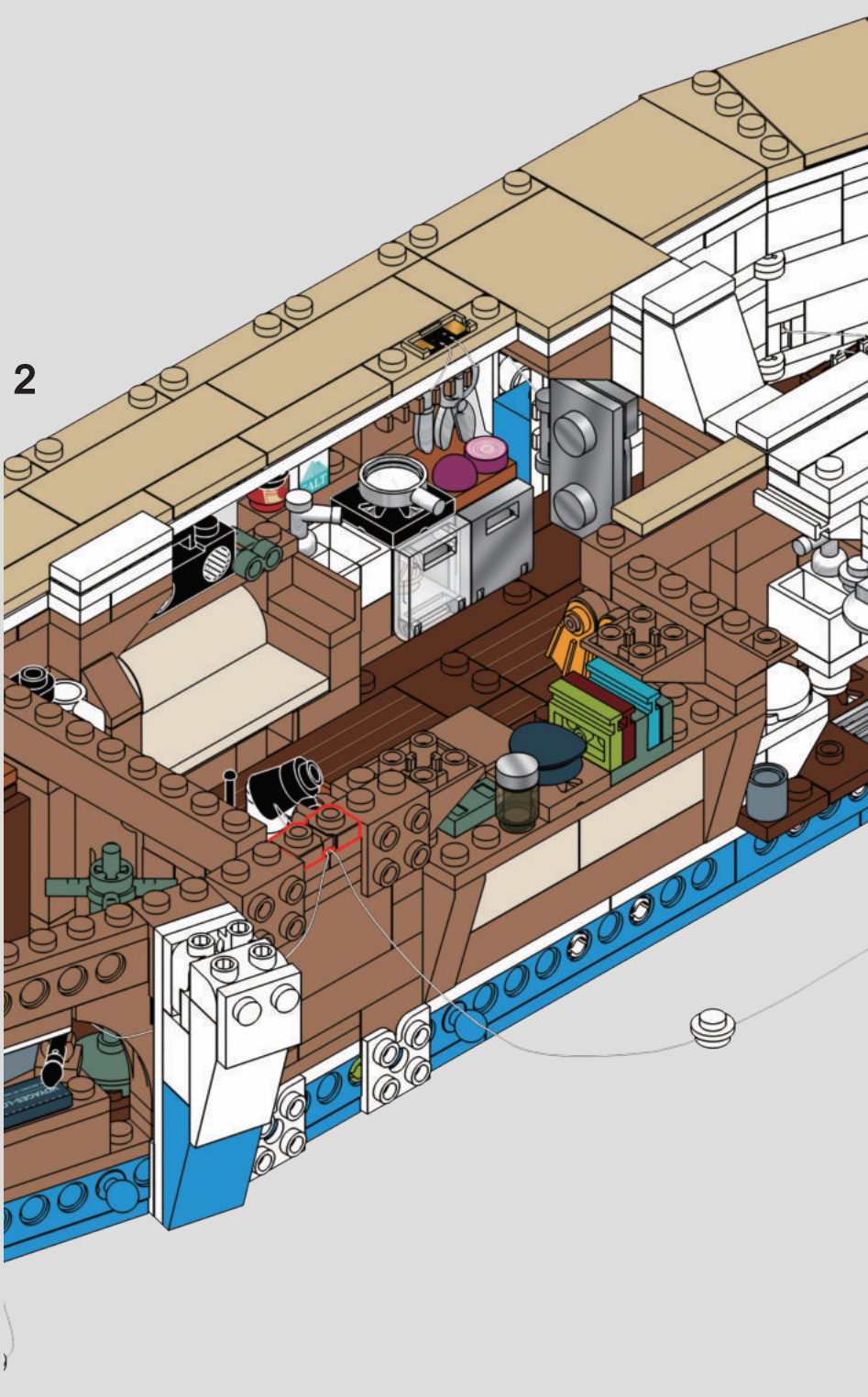

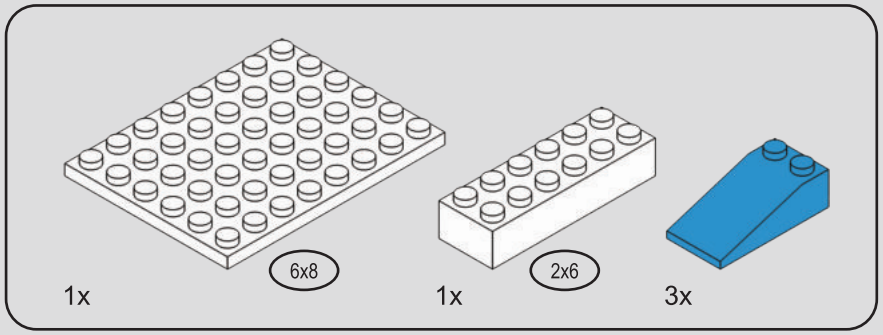

216

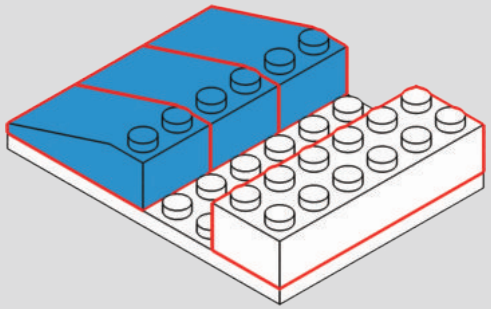

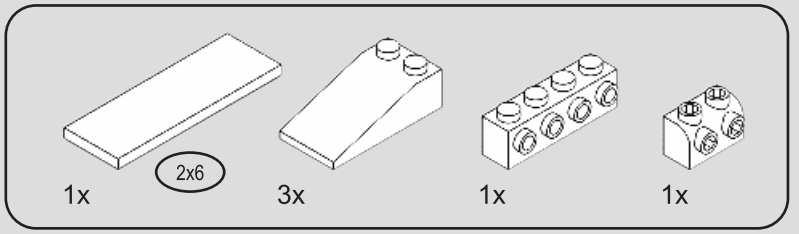

217

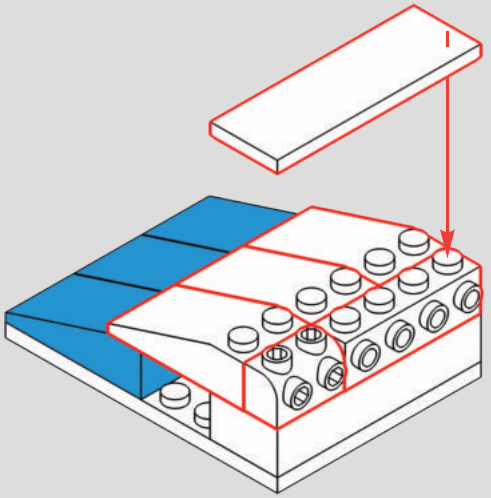

218

1

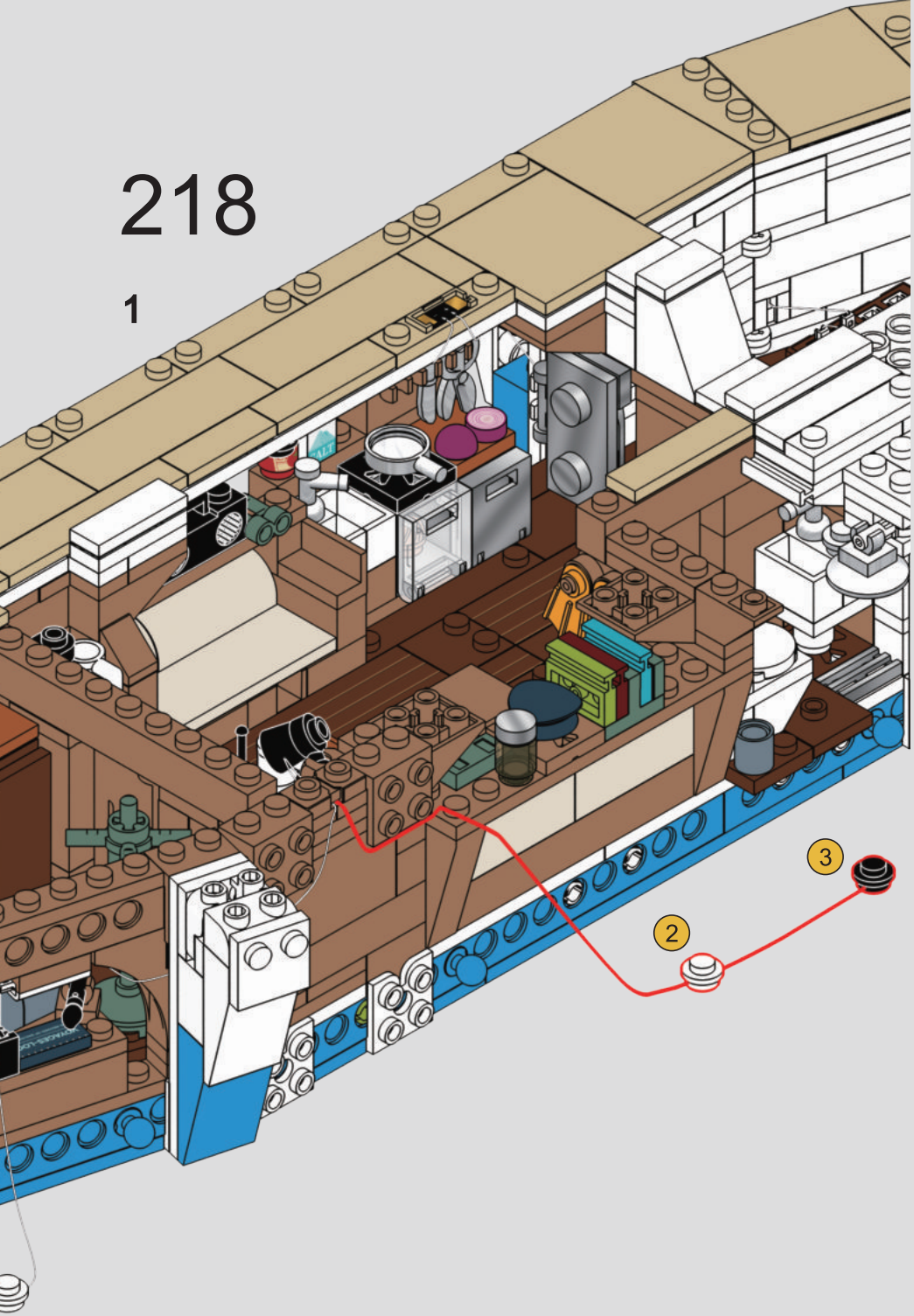

2

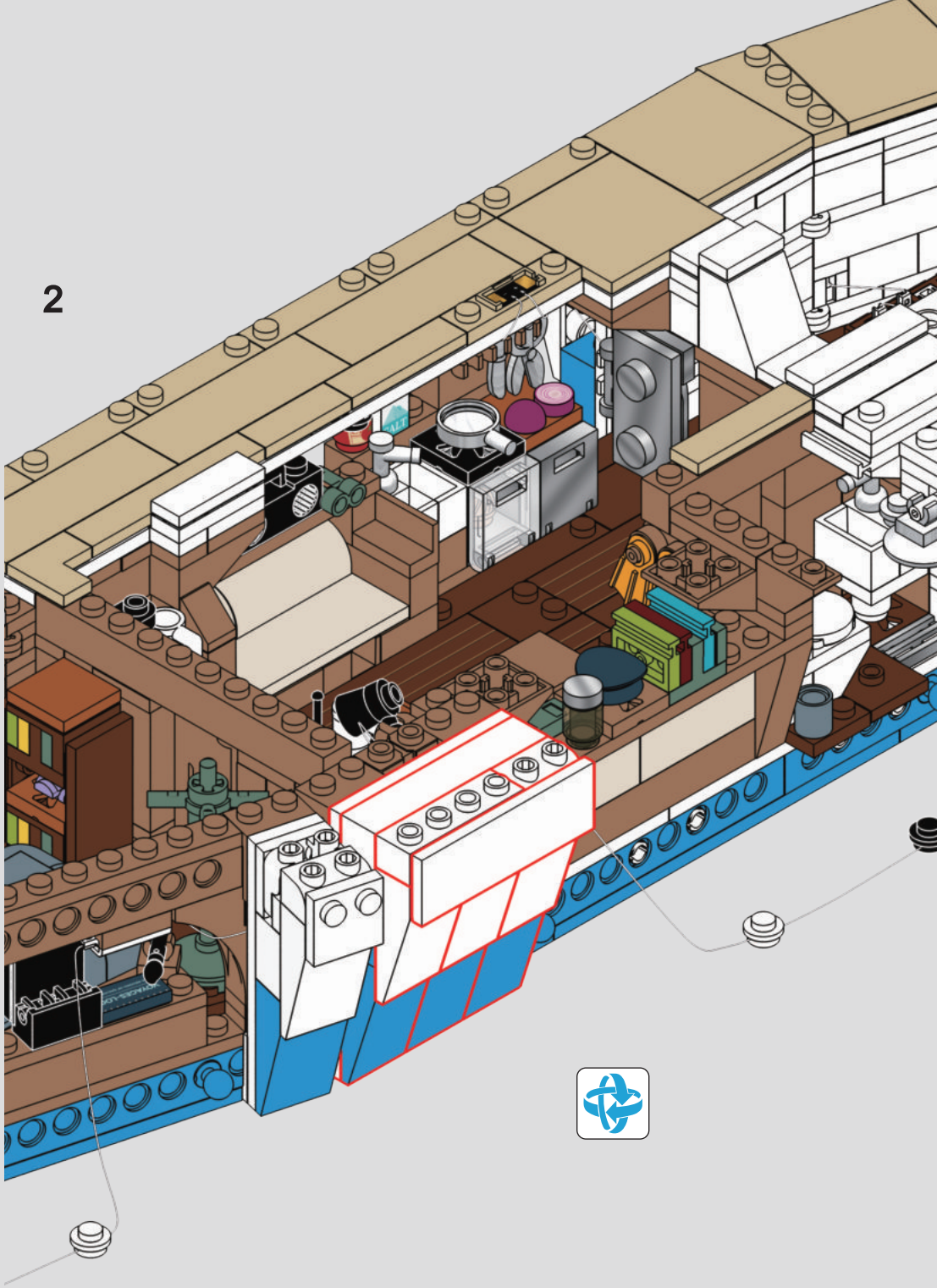

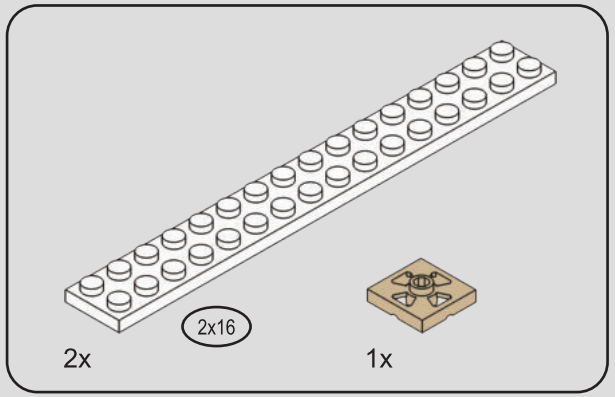
2x16
2x
1x

219

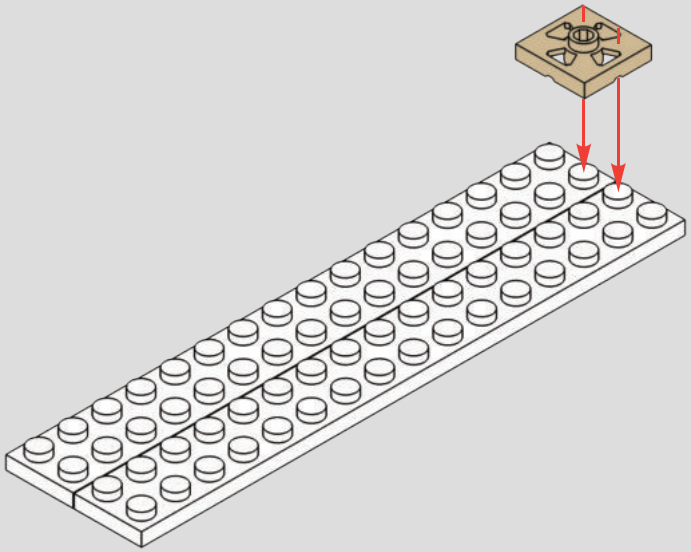

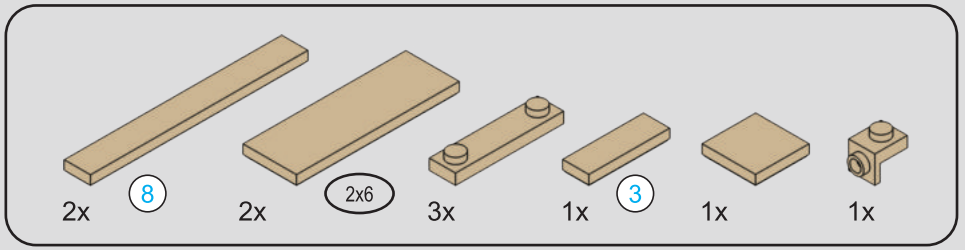
2x
8
2x
2x6
3x
1x
3
1x
1x

220

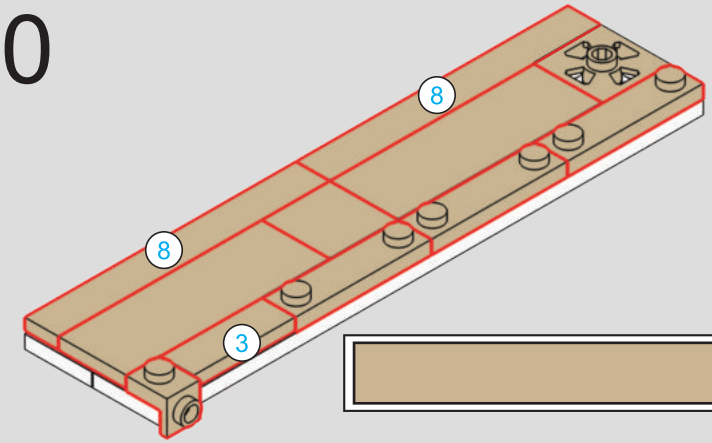
8
8
3

8 1:1

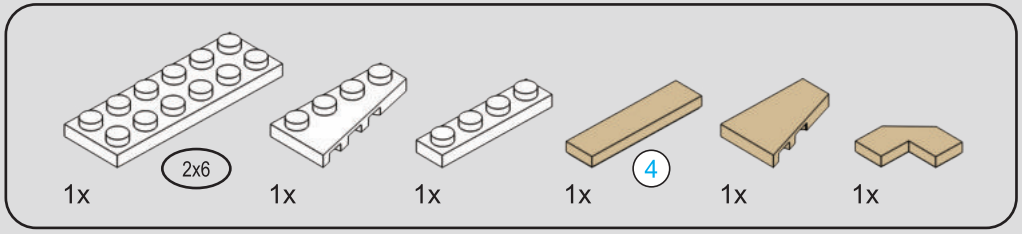
1x
2x6
1x
1x
1x
4
1x
1x

221

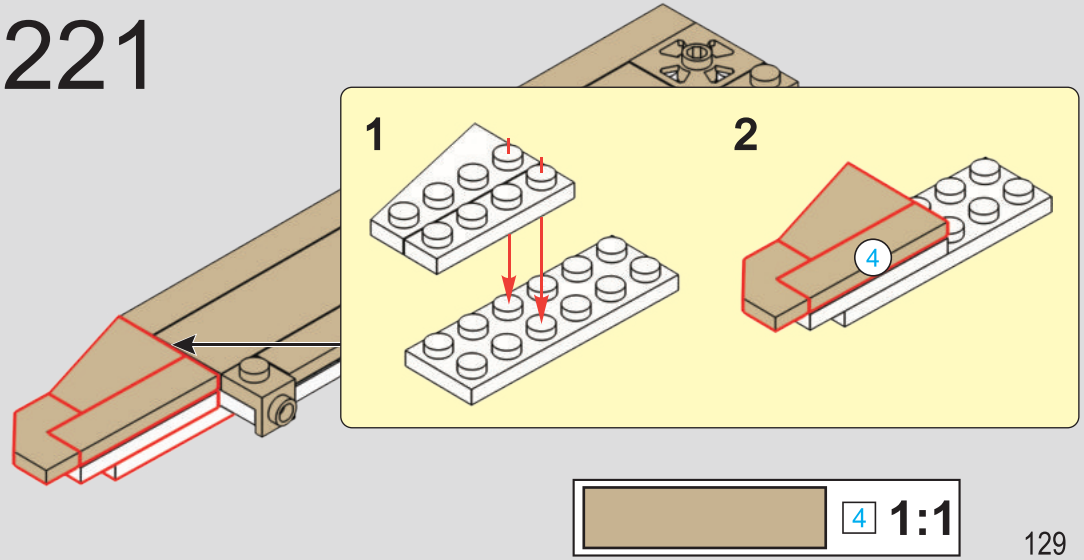
1
2
4
4 1:1

222

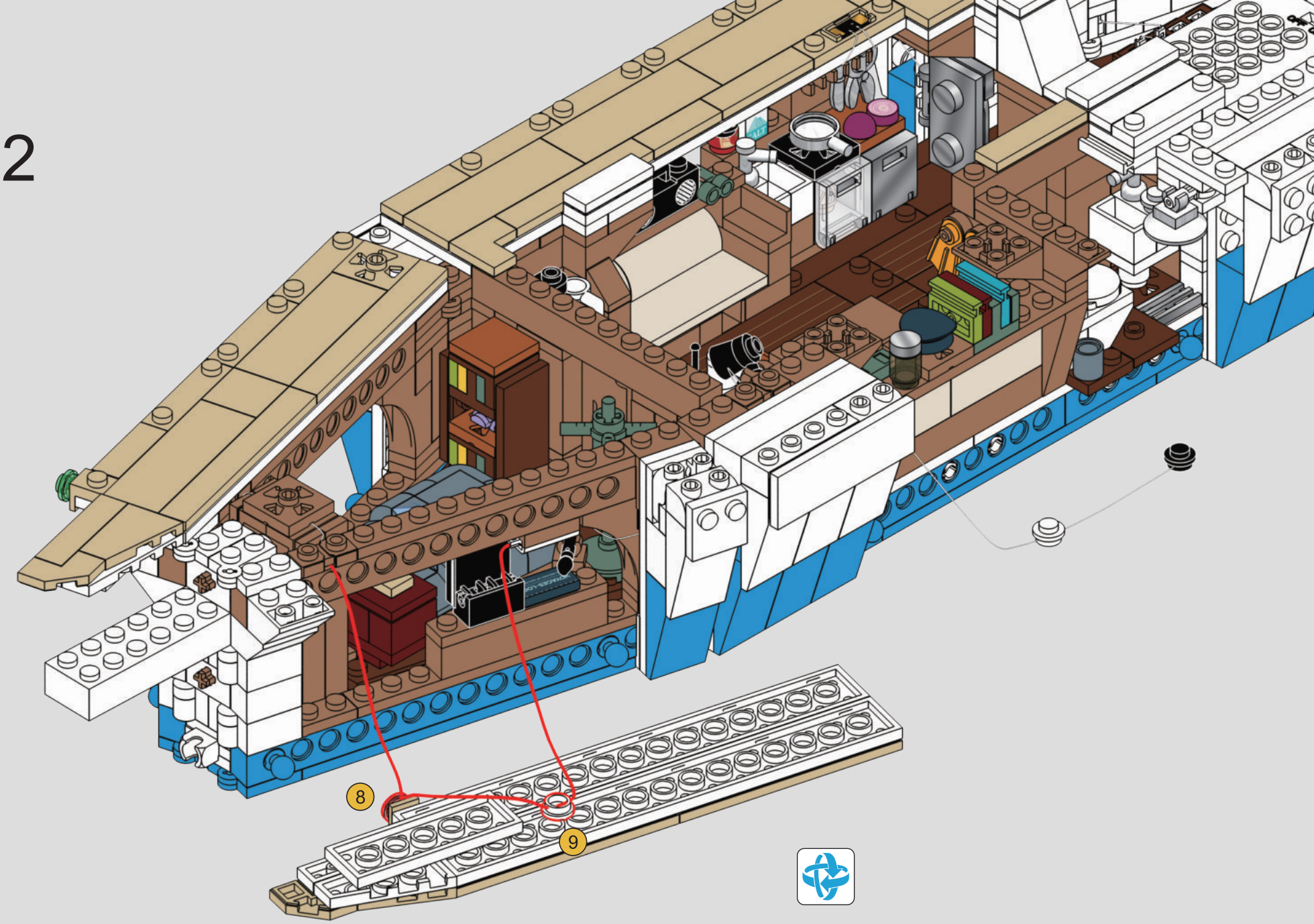

223

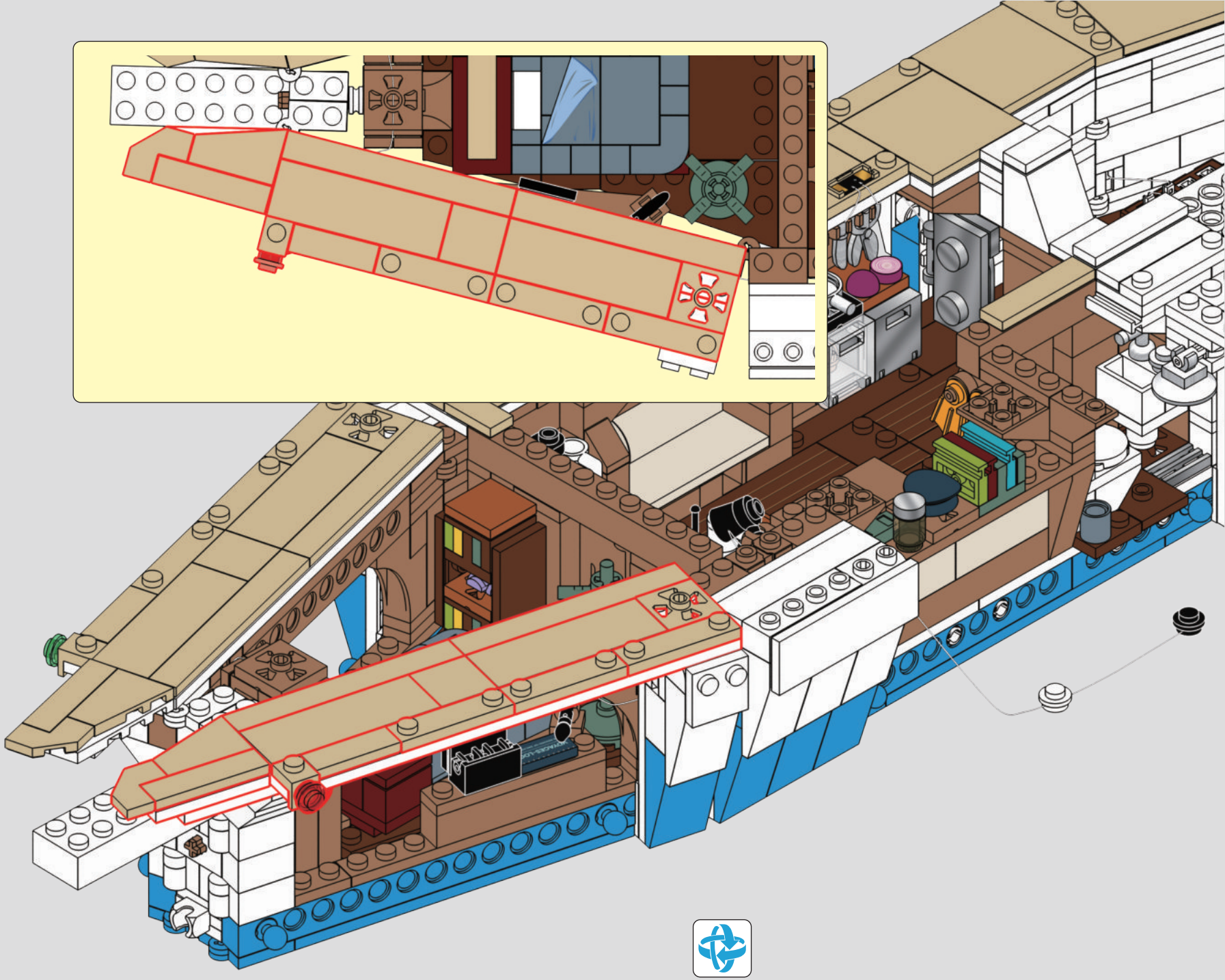

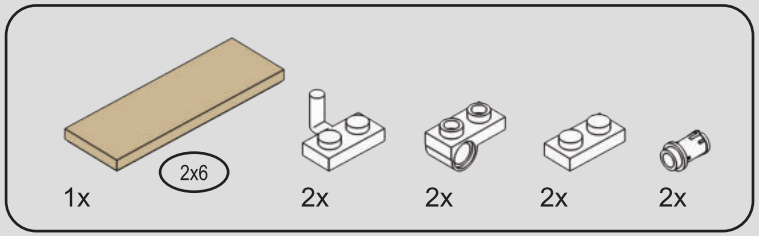

224

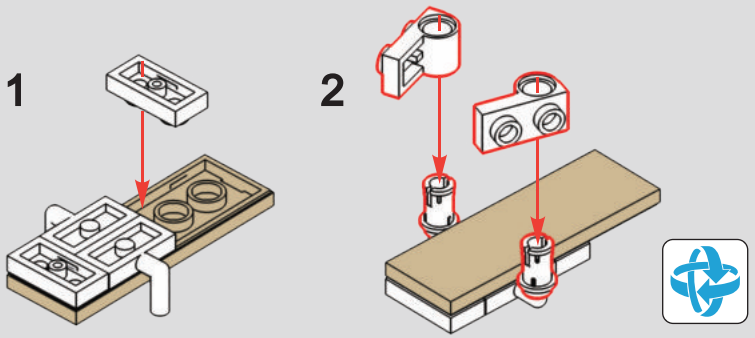

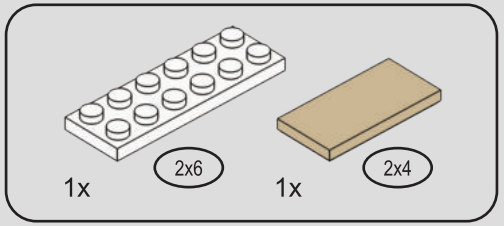

225

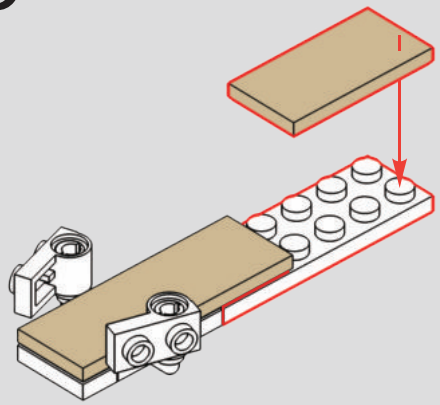

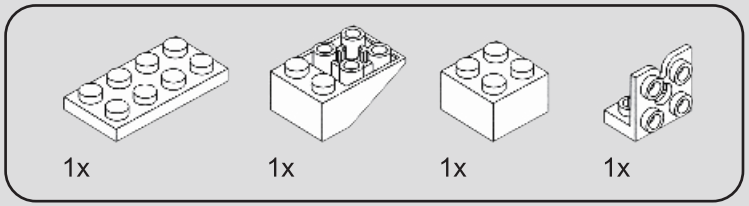

226

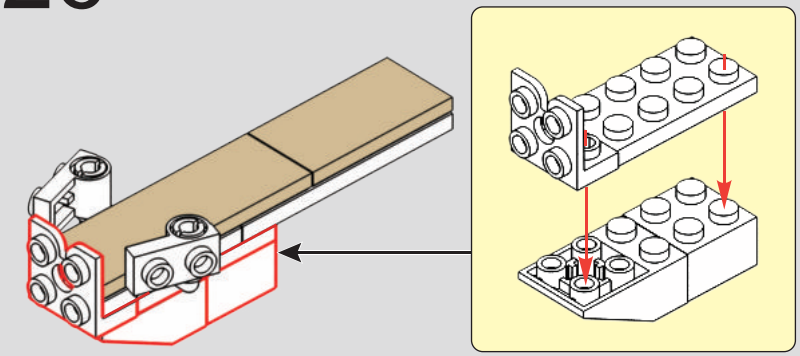

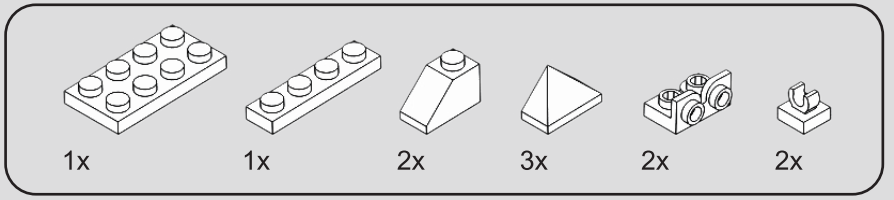

227

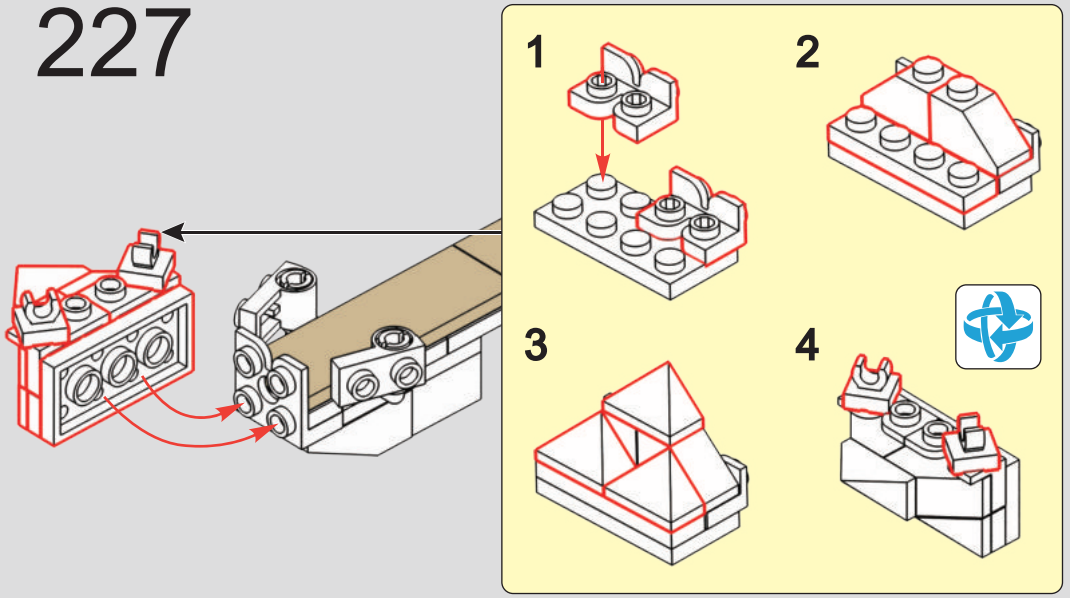

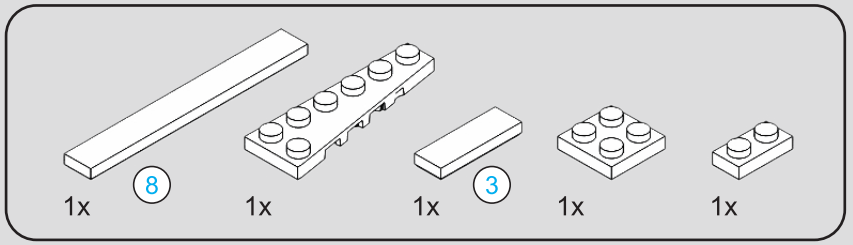

228

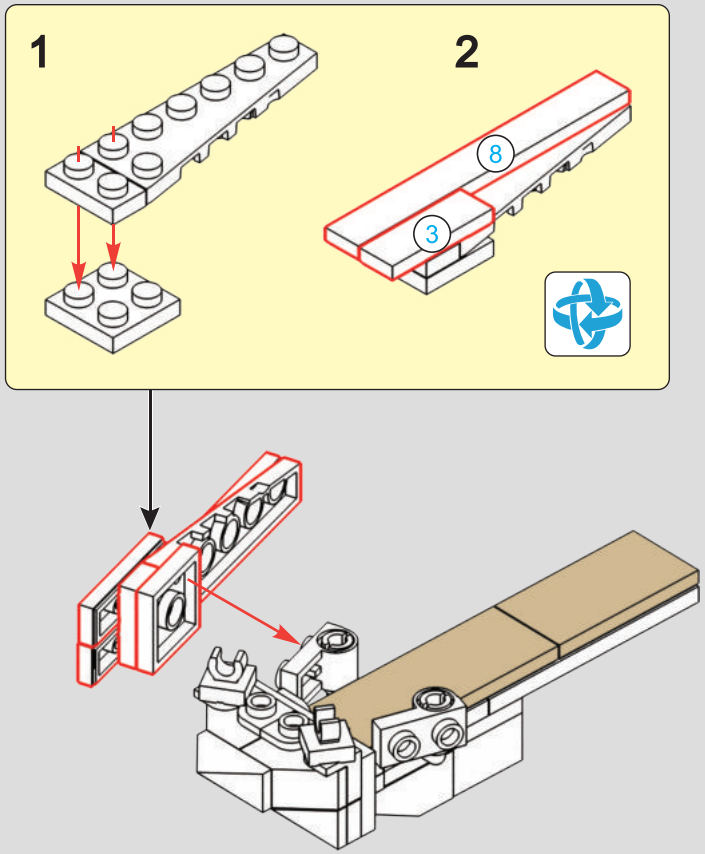

8 1:1

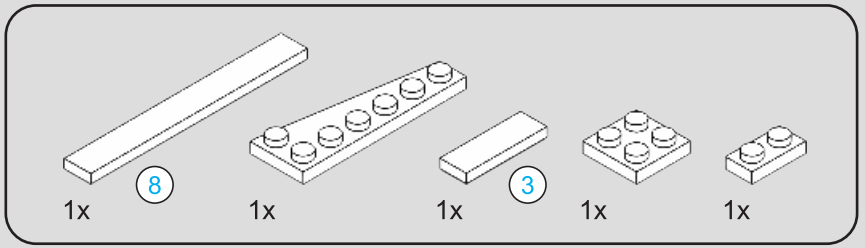

229

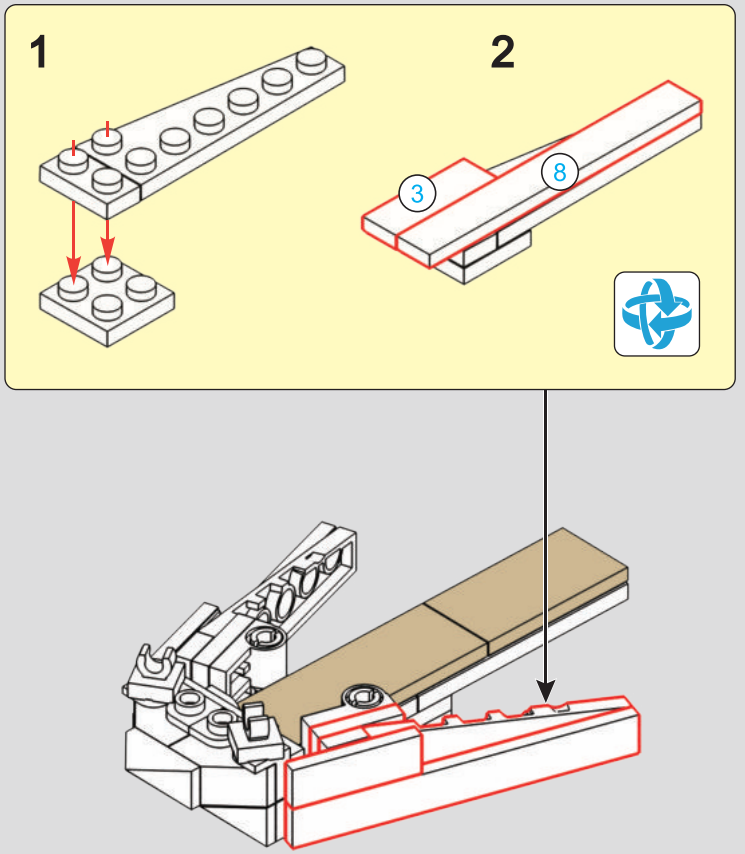

8 1:1

230

1

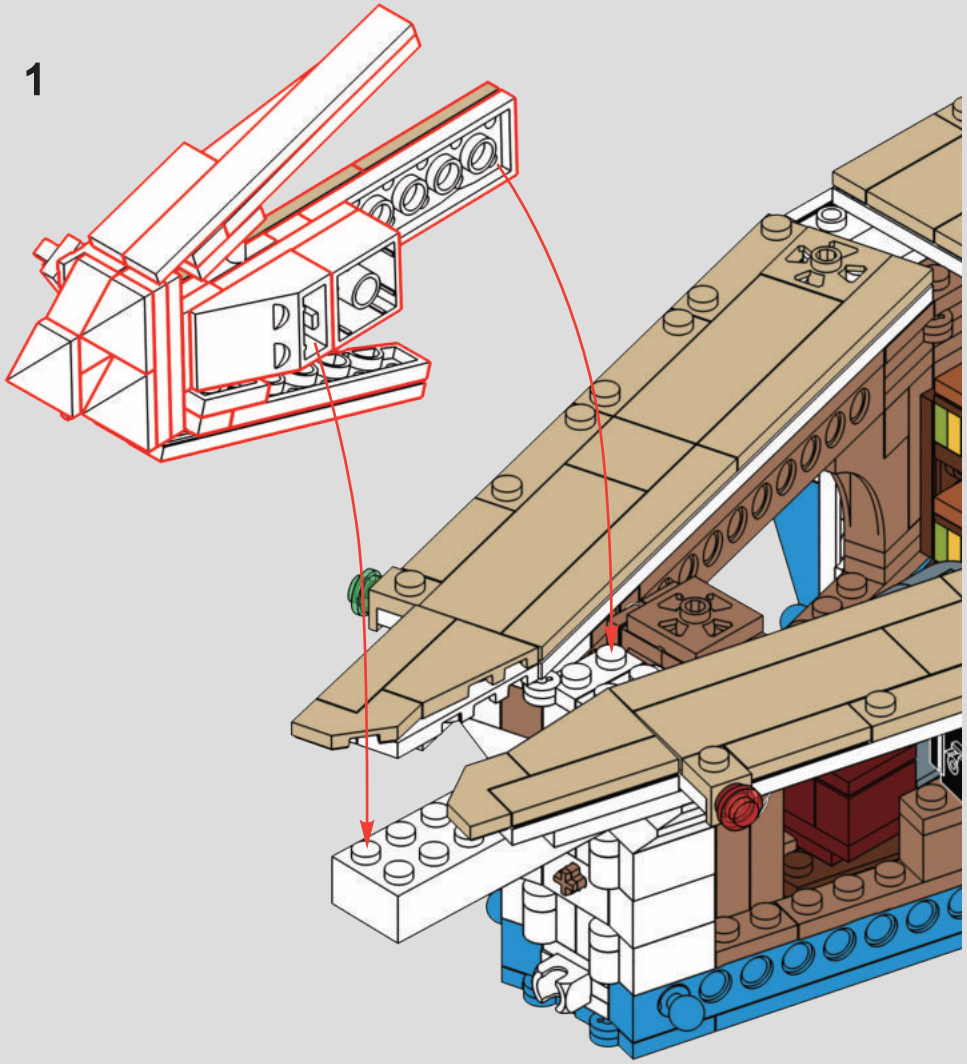

2

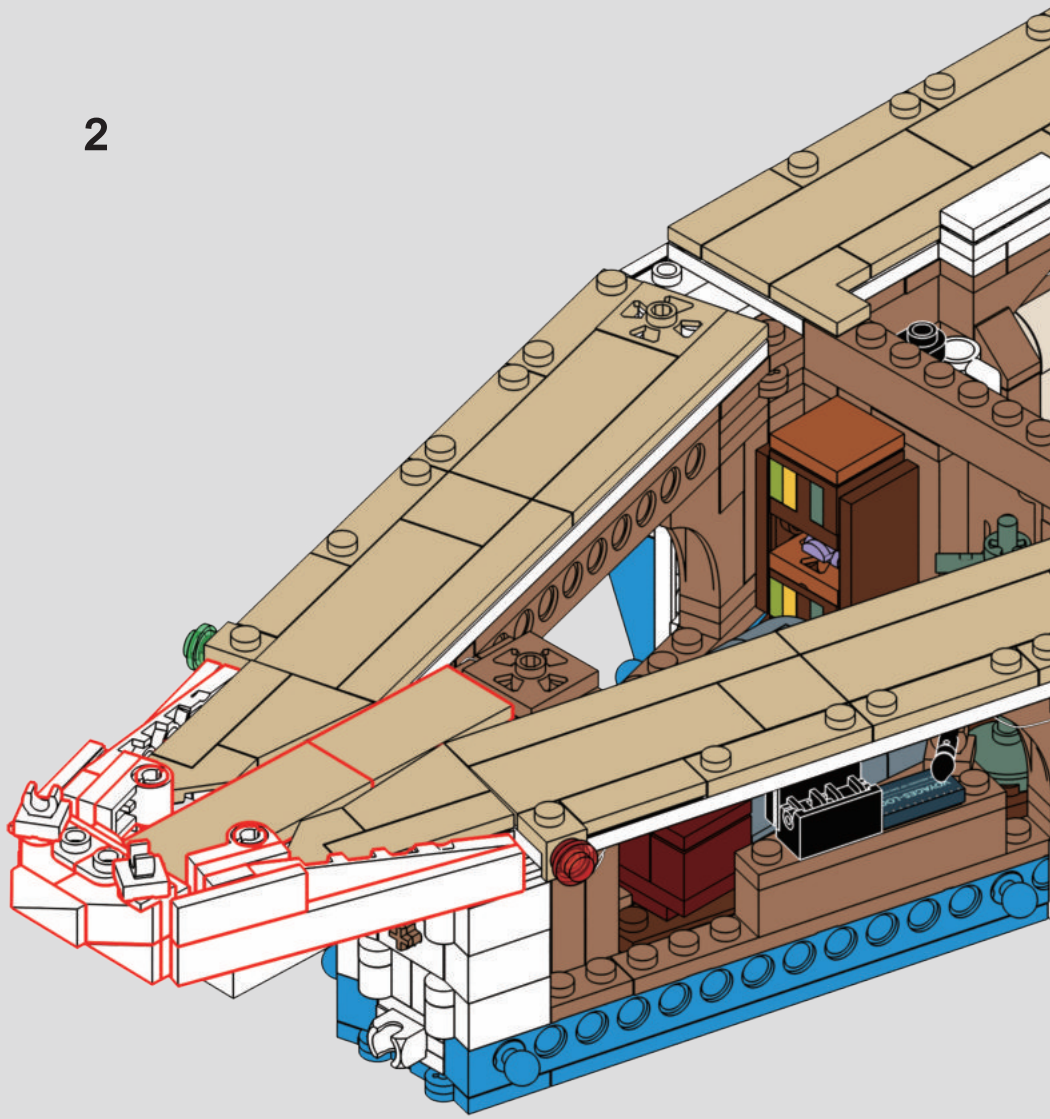

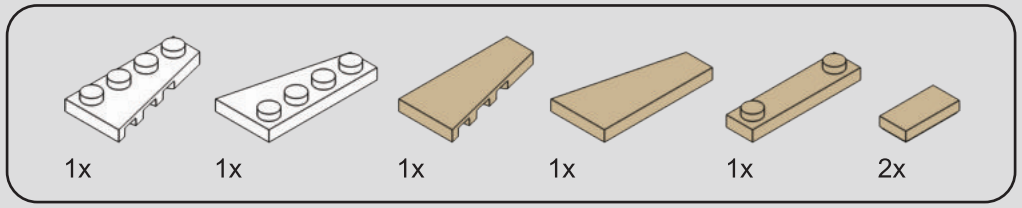

231

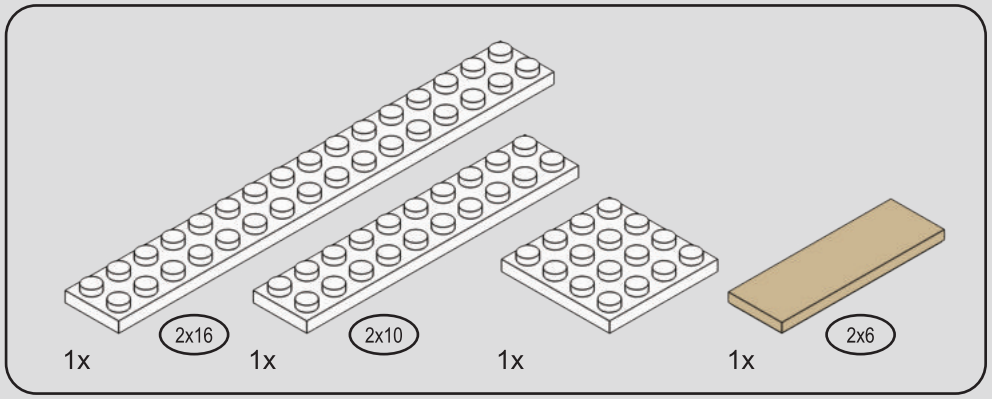
1x
2x16
1x
2x10
1x
1x
2x6

232

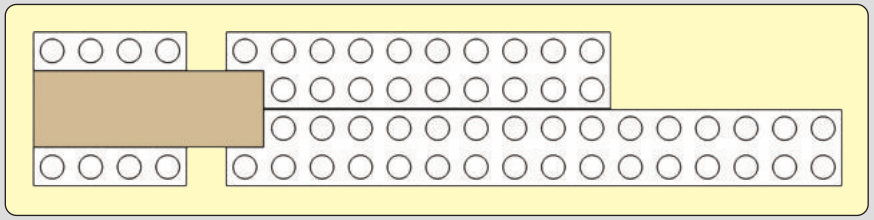

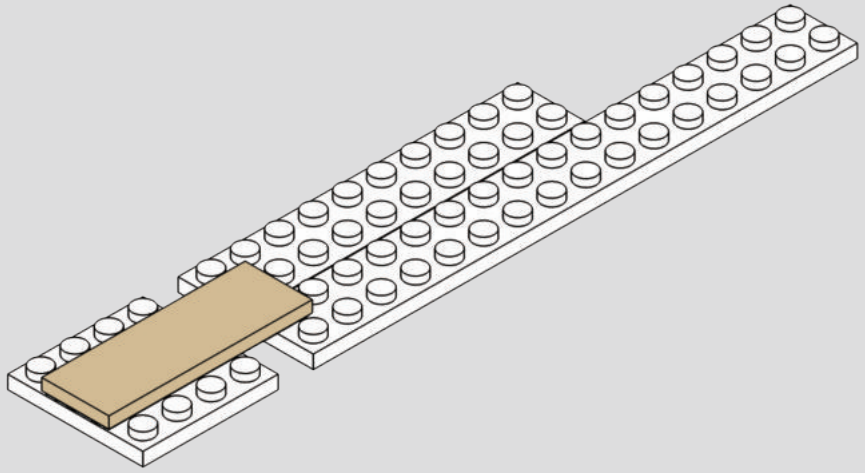

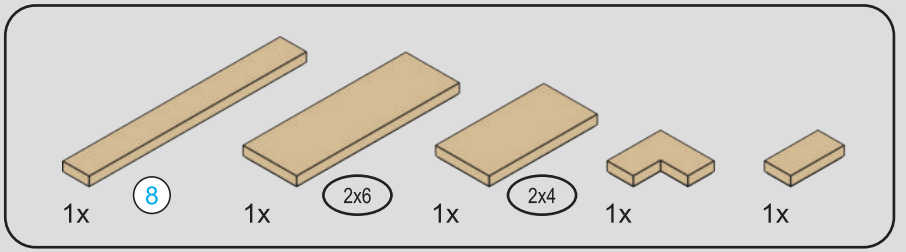
1x
8
1x
2x6
1x
2x4
1x
1x

233

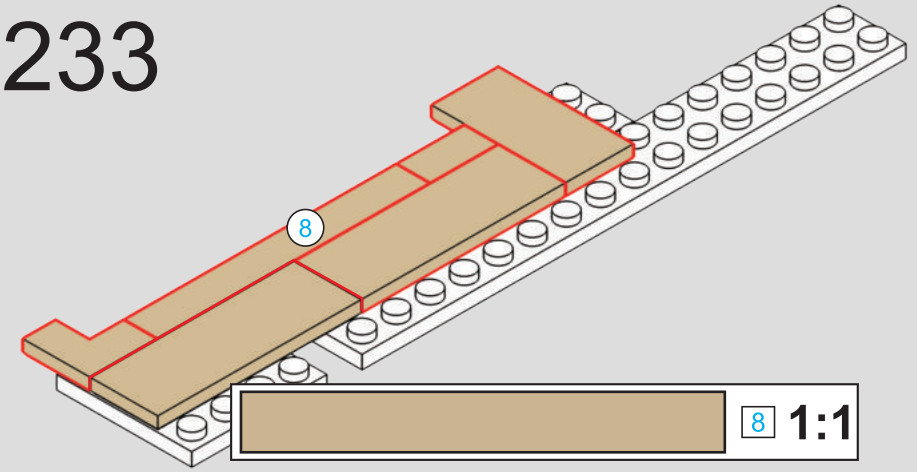
8
8
1:1

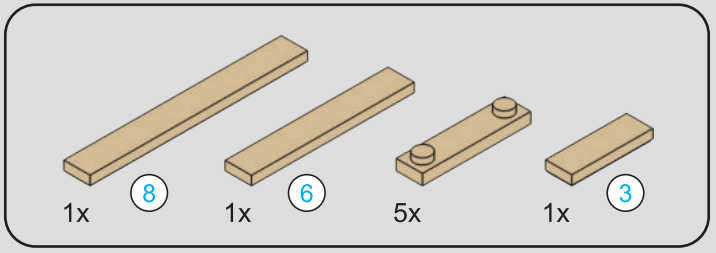
1x
8
1x
6
5x
1x
3

234

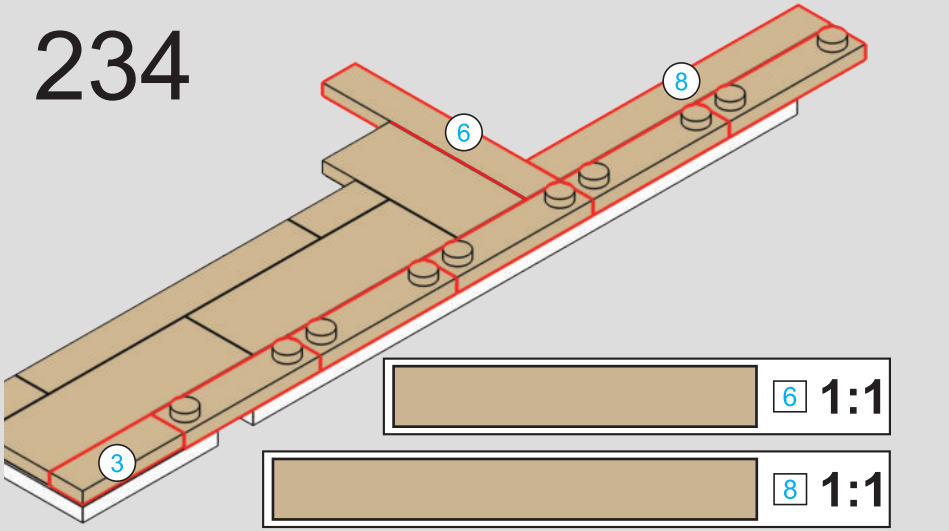
8
6
3
6
1:1
8
1:1

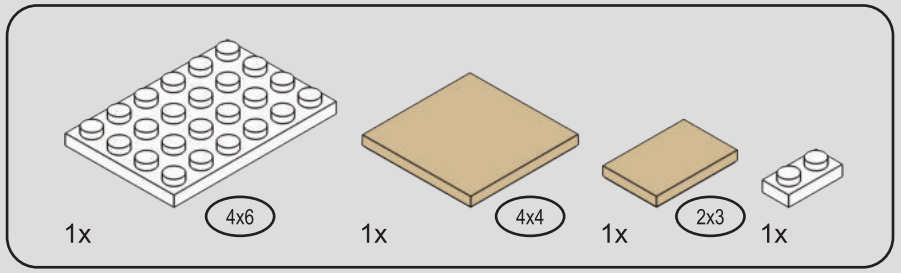

235

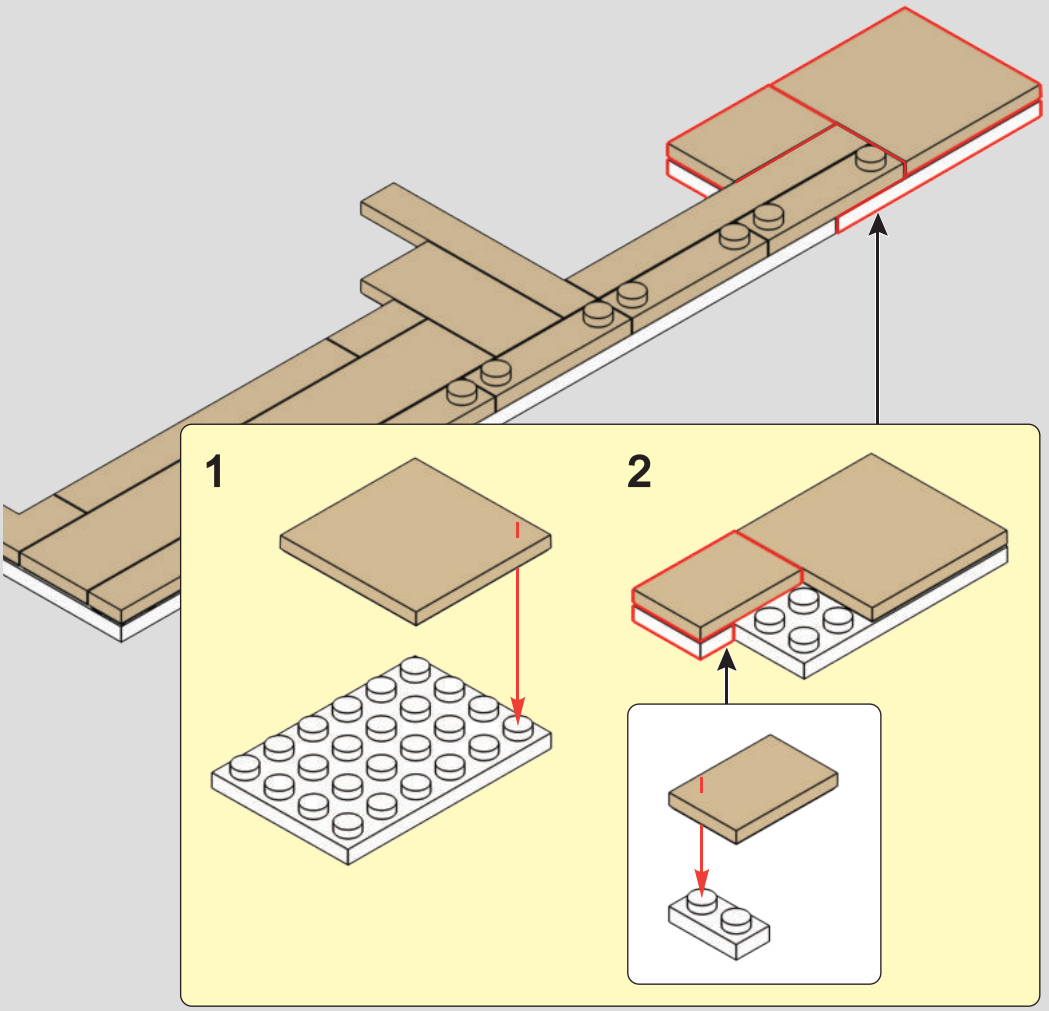

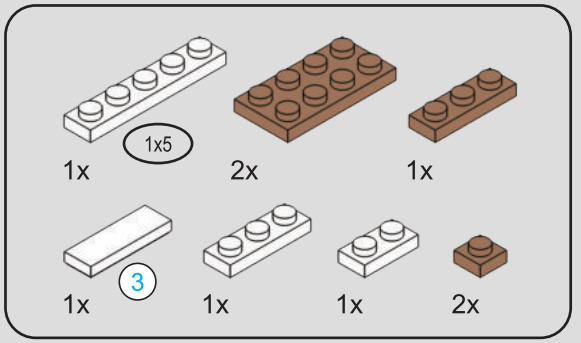

236

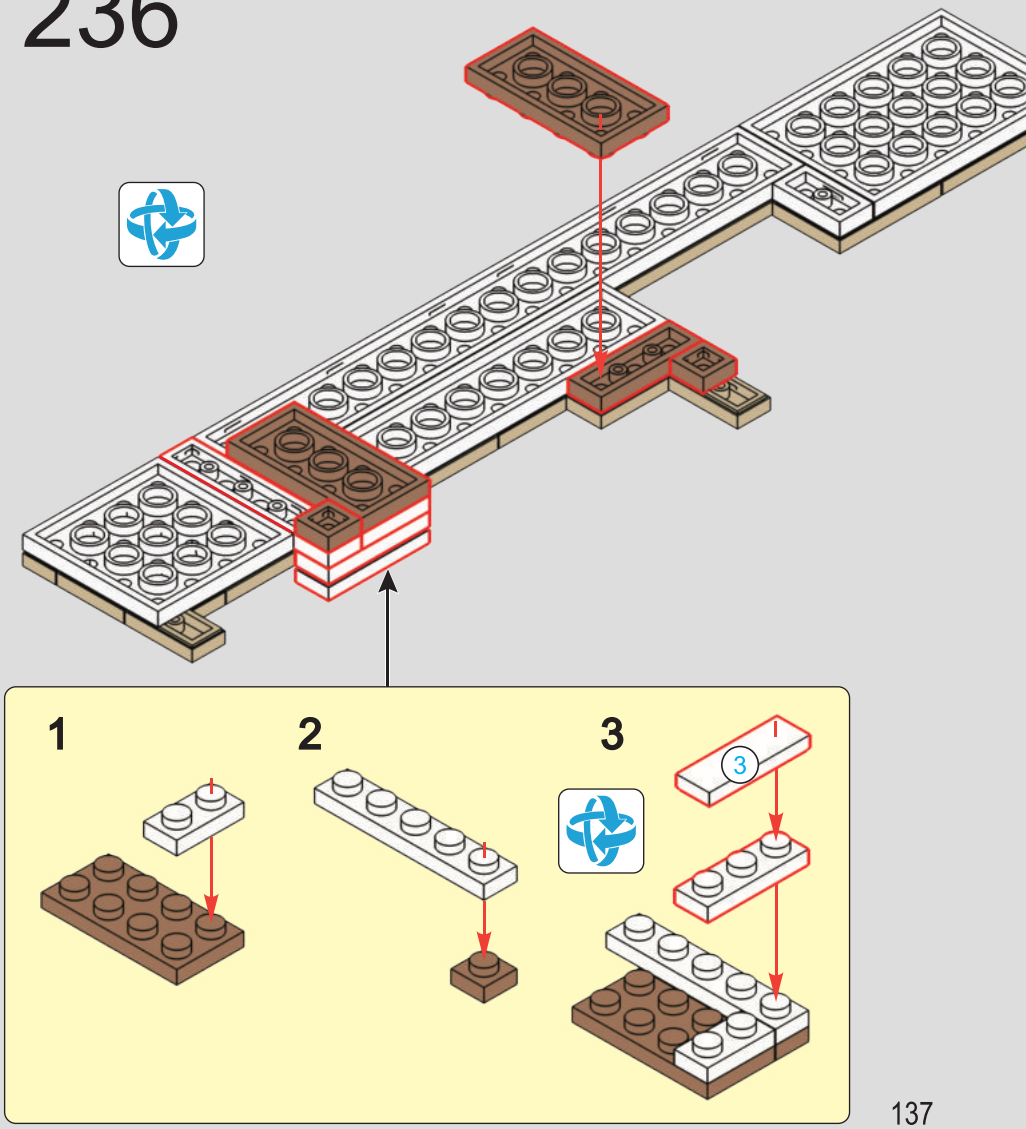



237

1

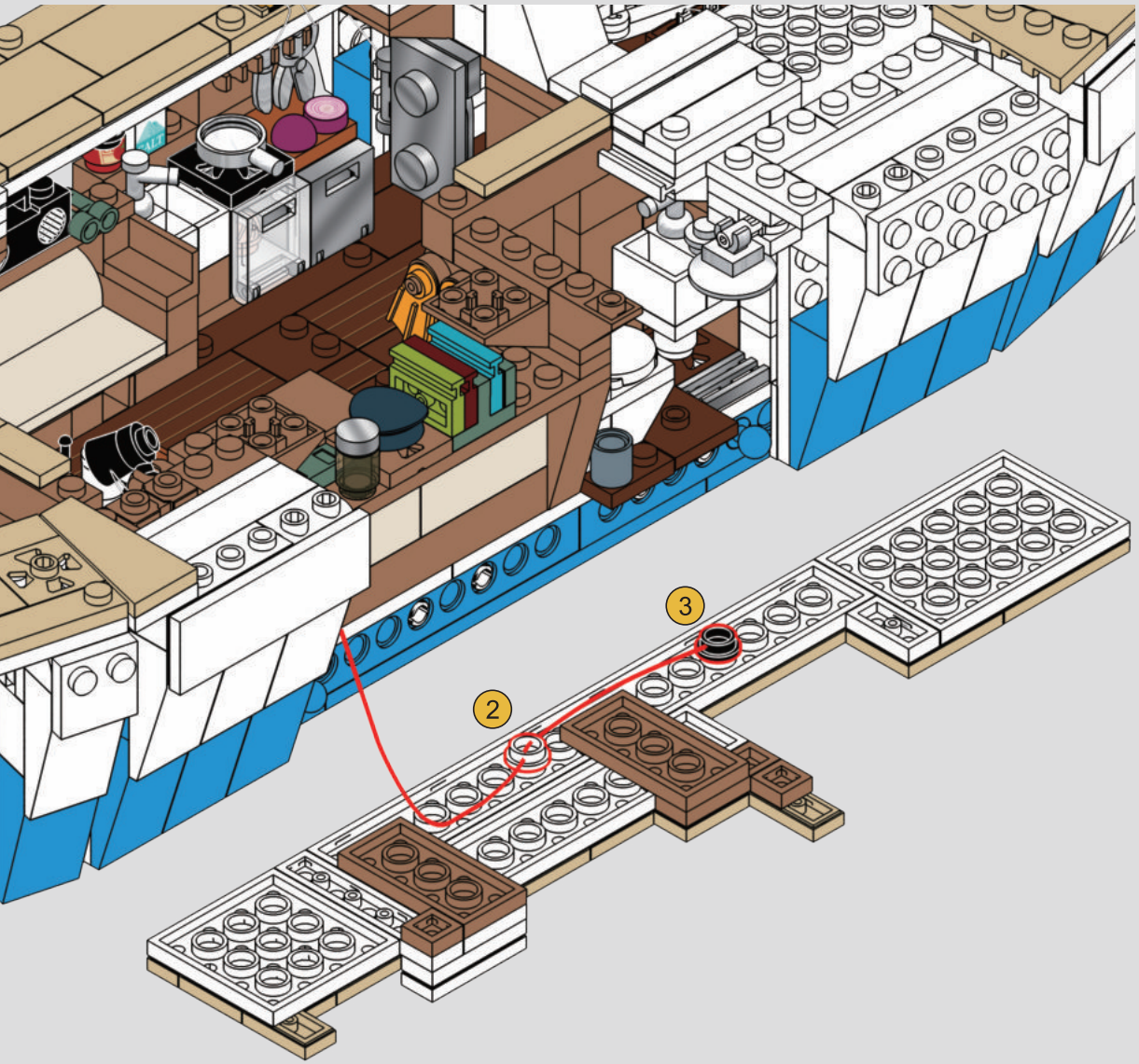

2

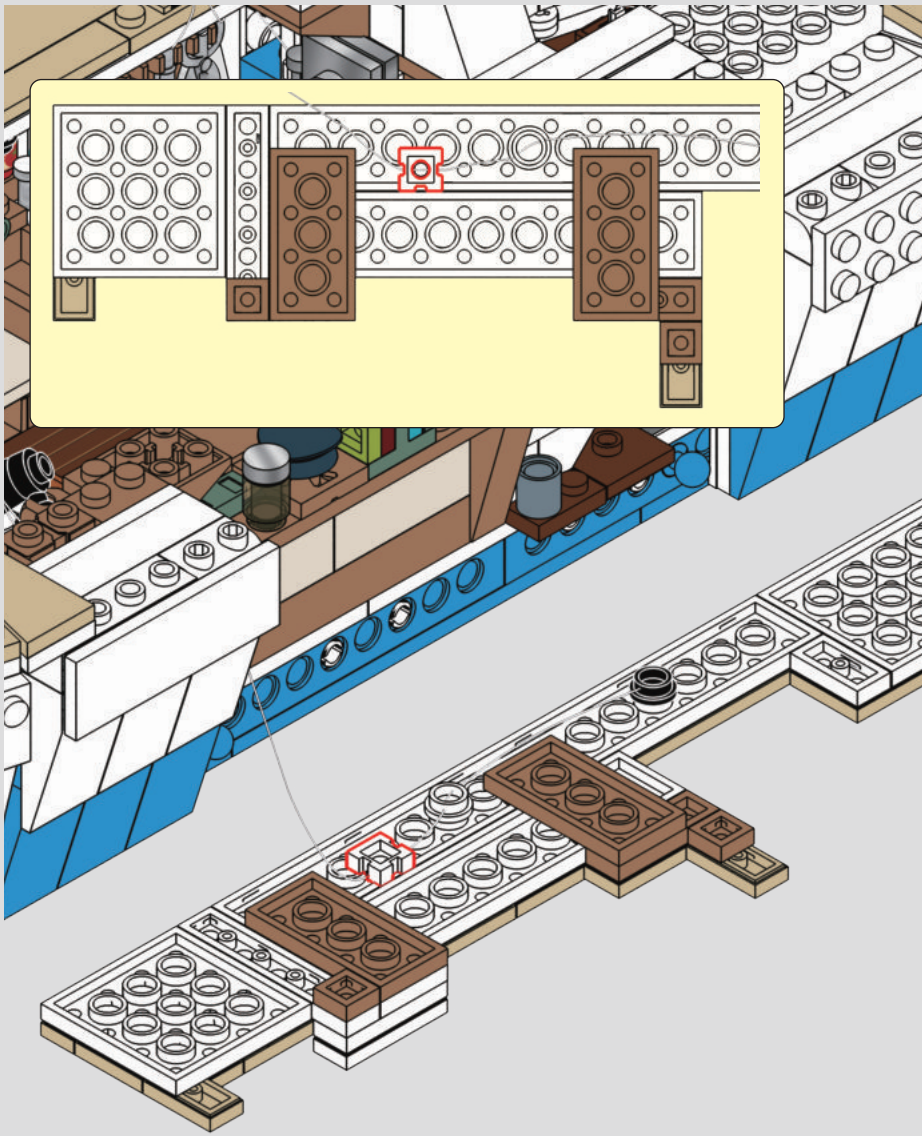

238

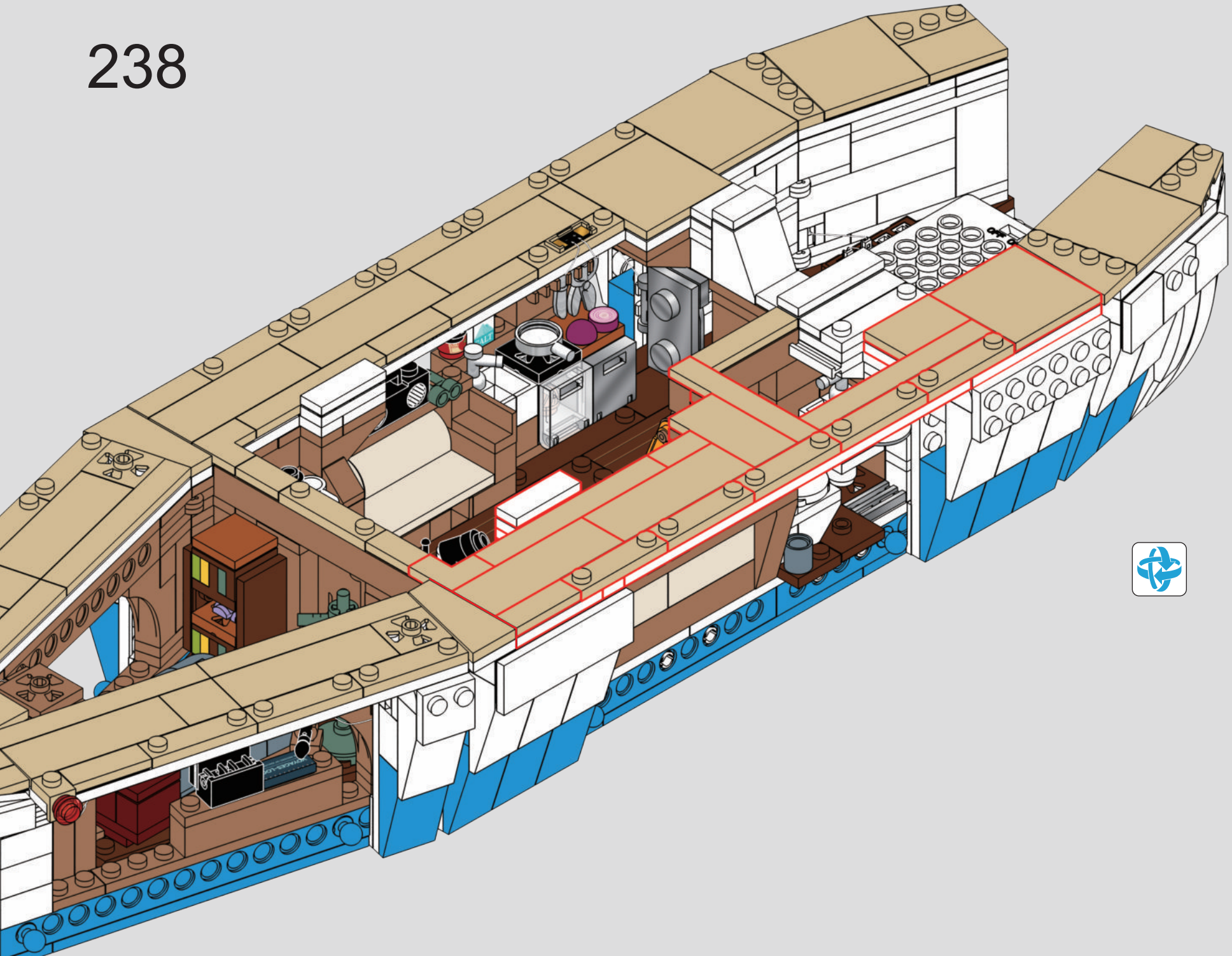

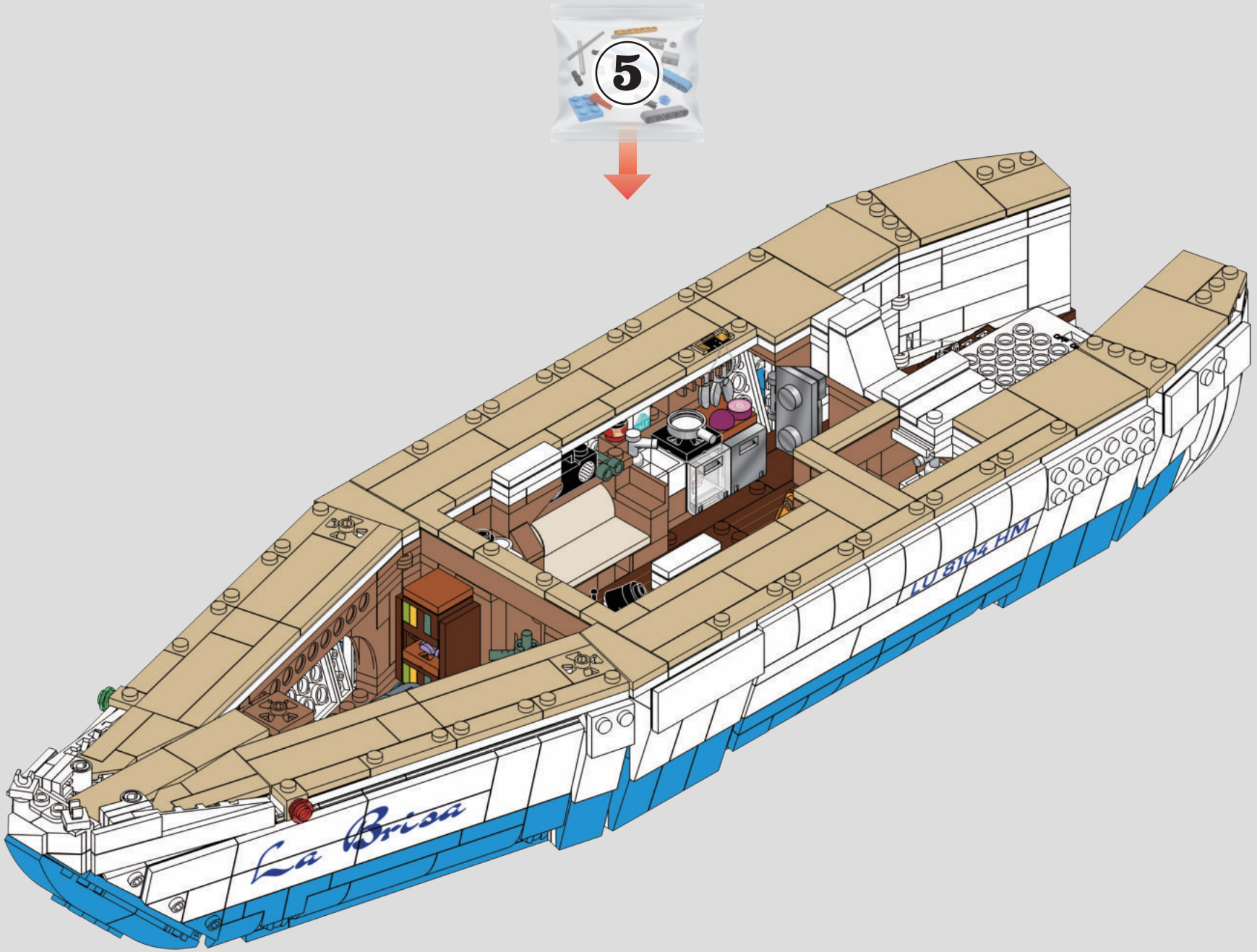
5
La Brisa
LU B104 HM

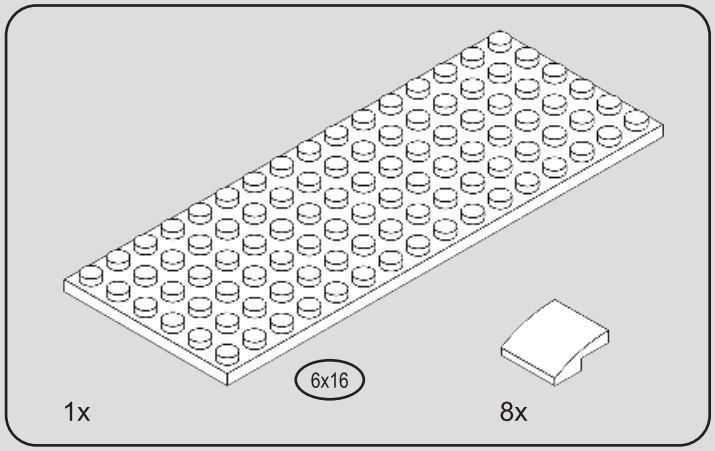
6x16
1x
8x

239

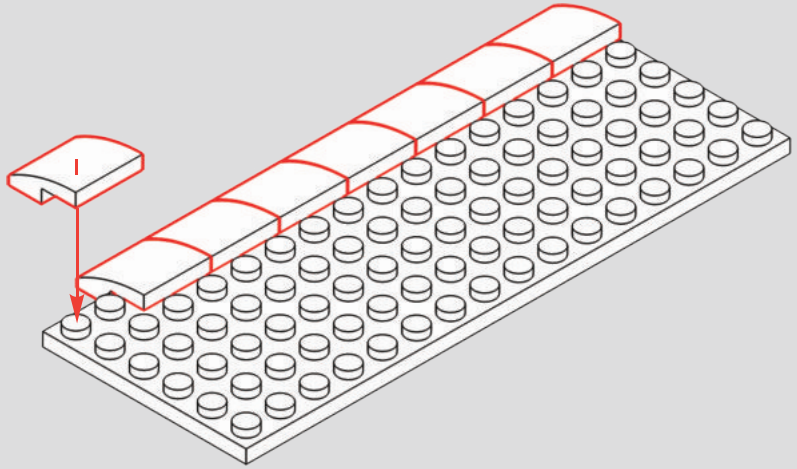

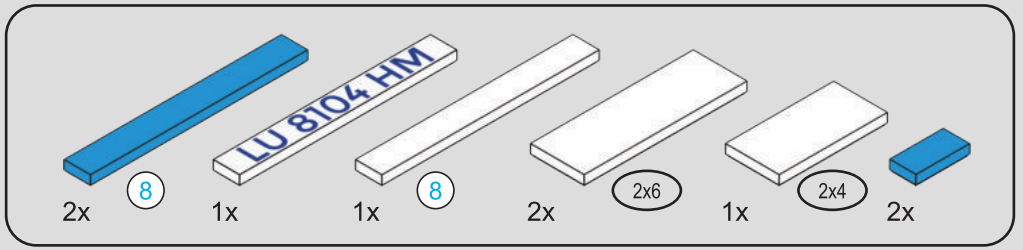
LU 8104 HM
2x
8
1x
1x
8
2x
2x6
1x
2x4
2x

240

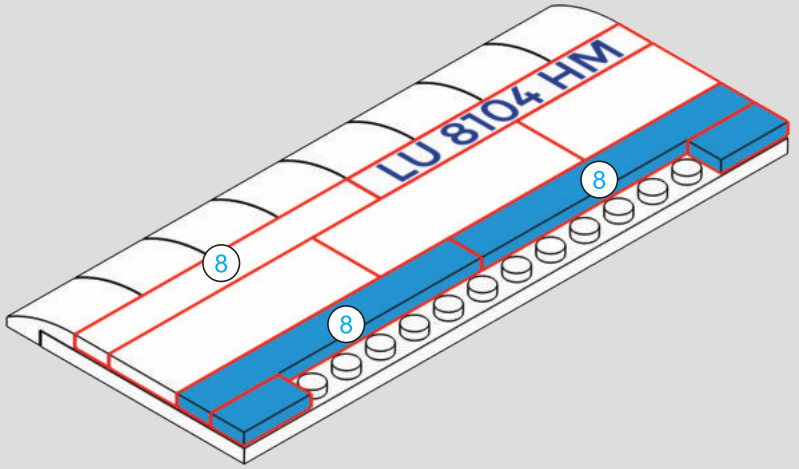
LU 8104 HM
8
8
8

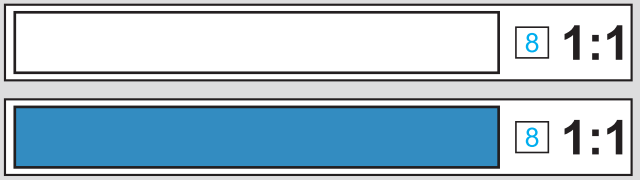
8
1:1
8
1:1

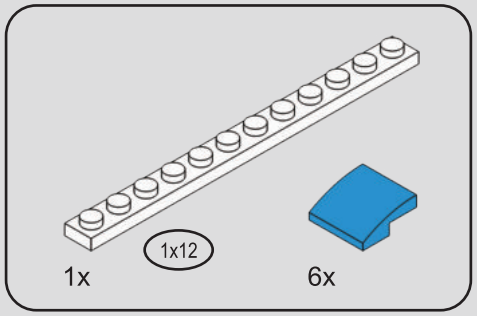

241

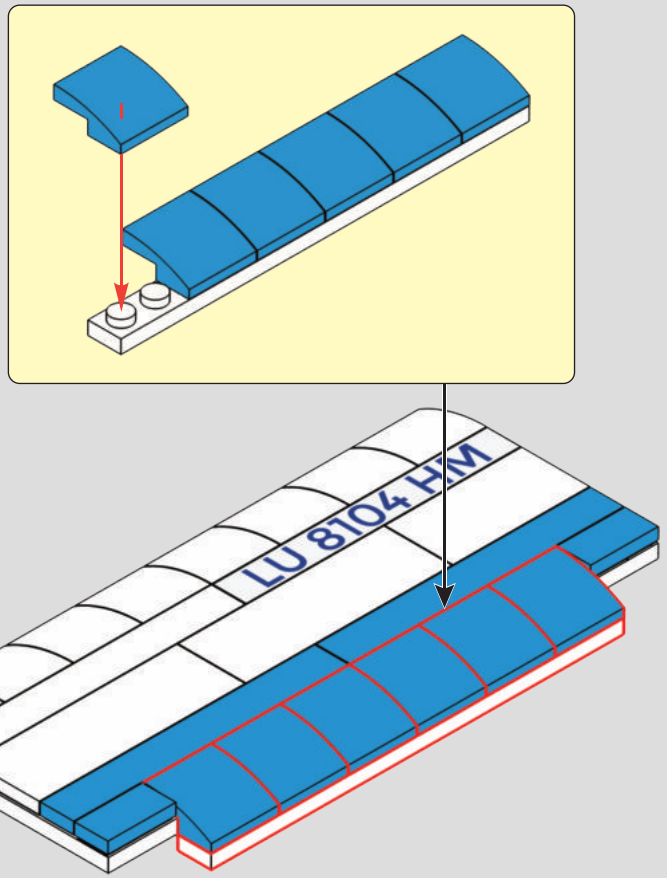

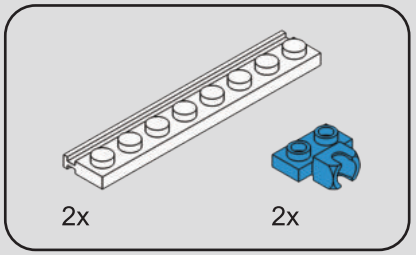

242

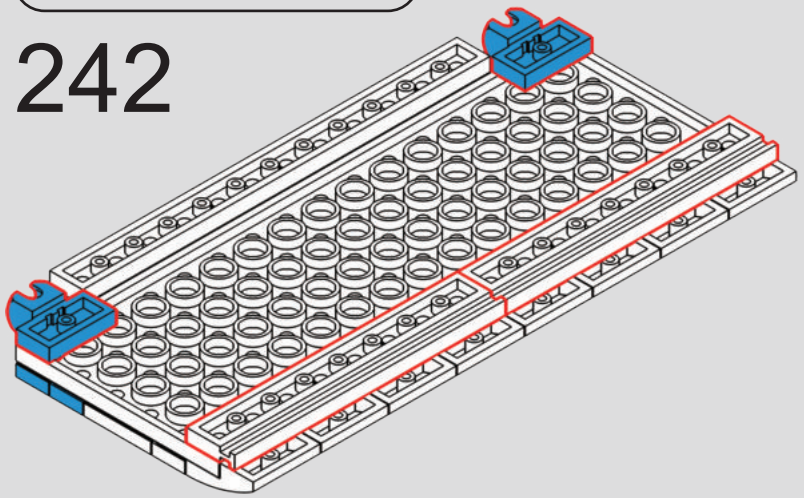

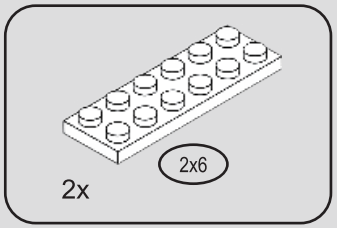

243

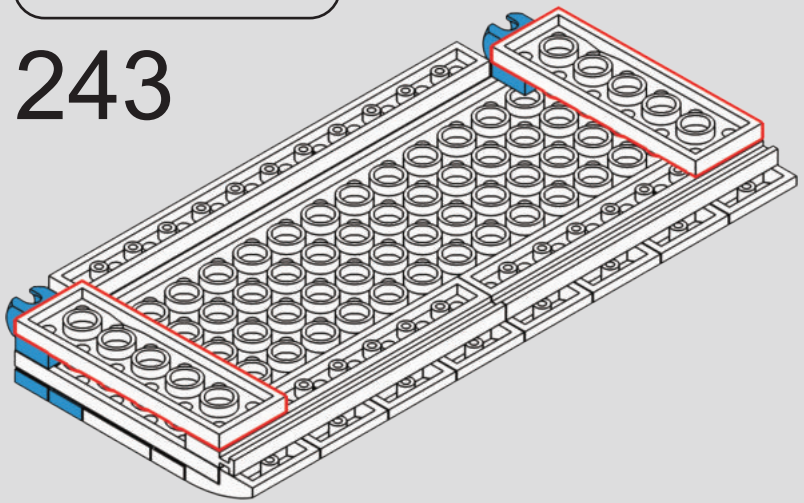

244

1

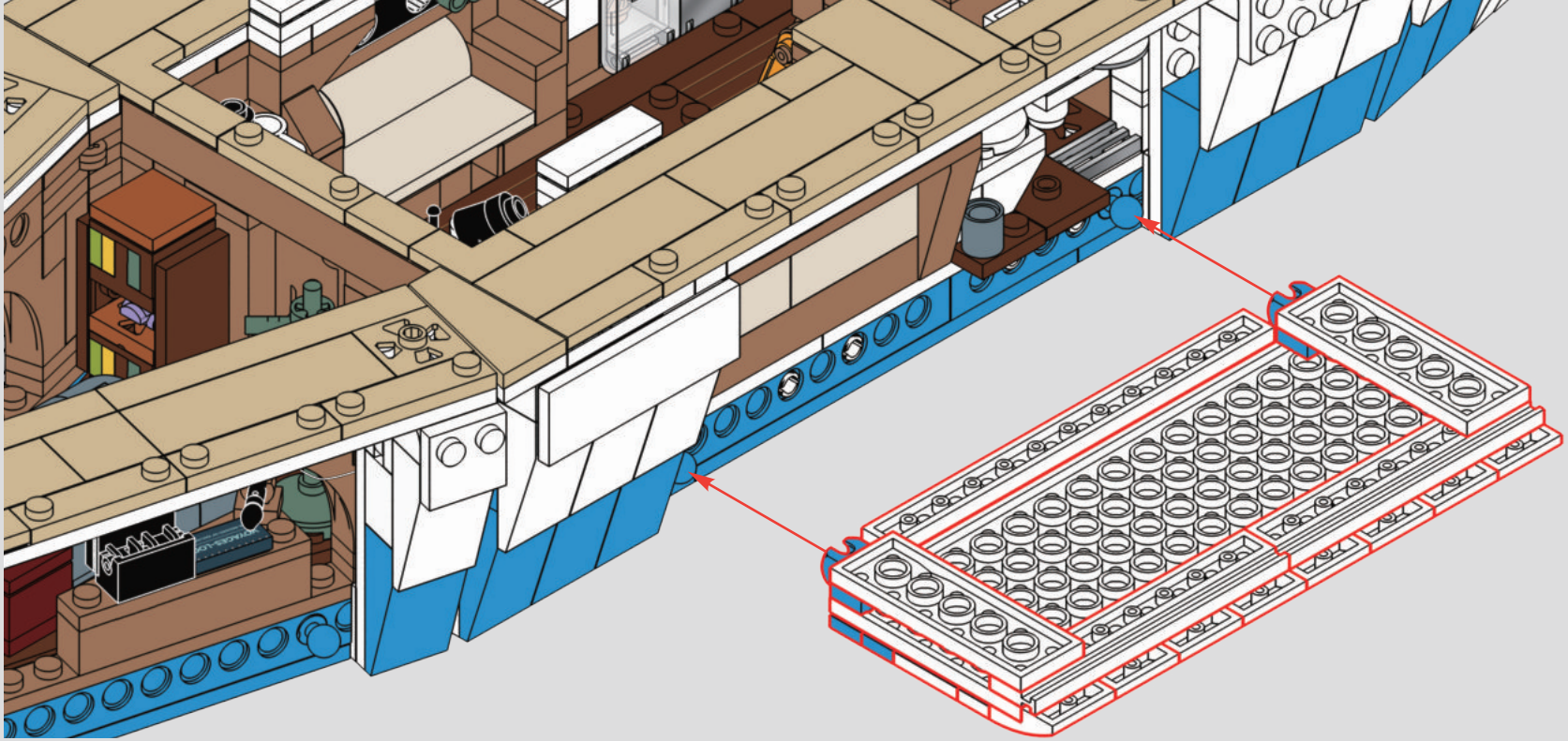

2

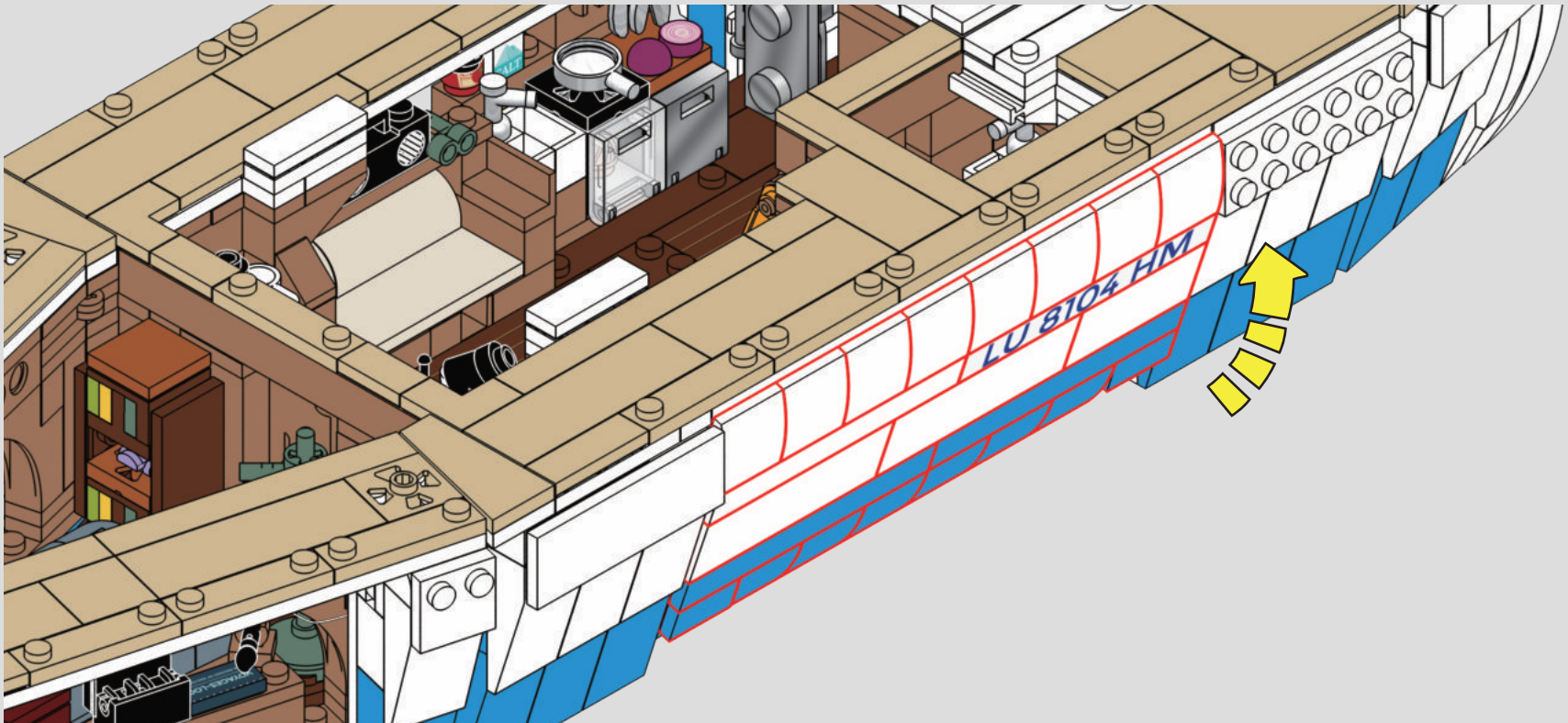

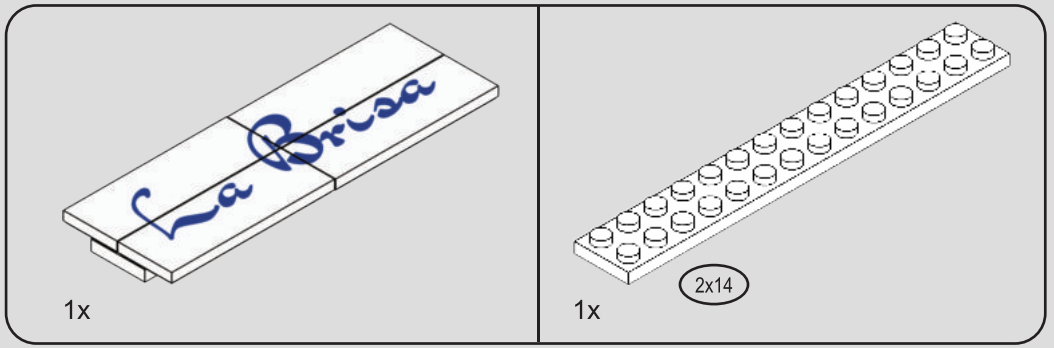

245

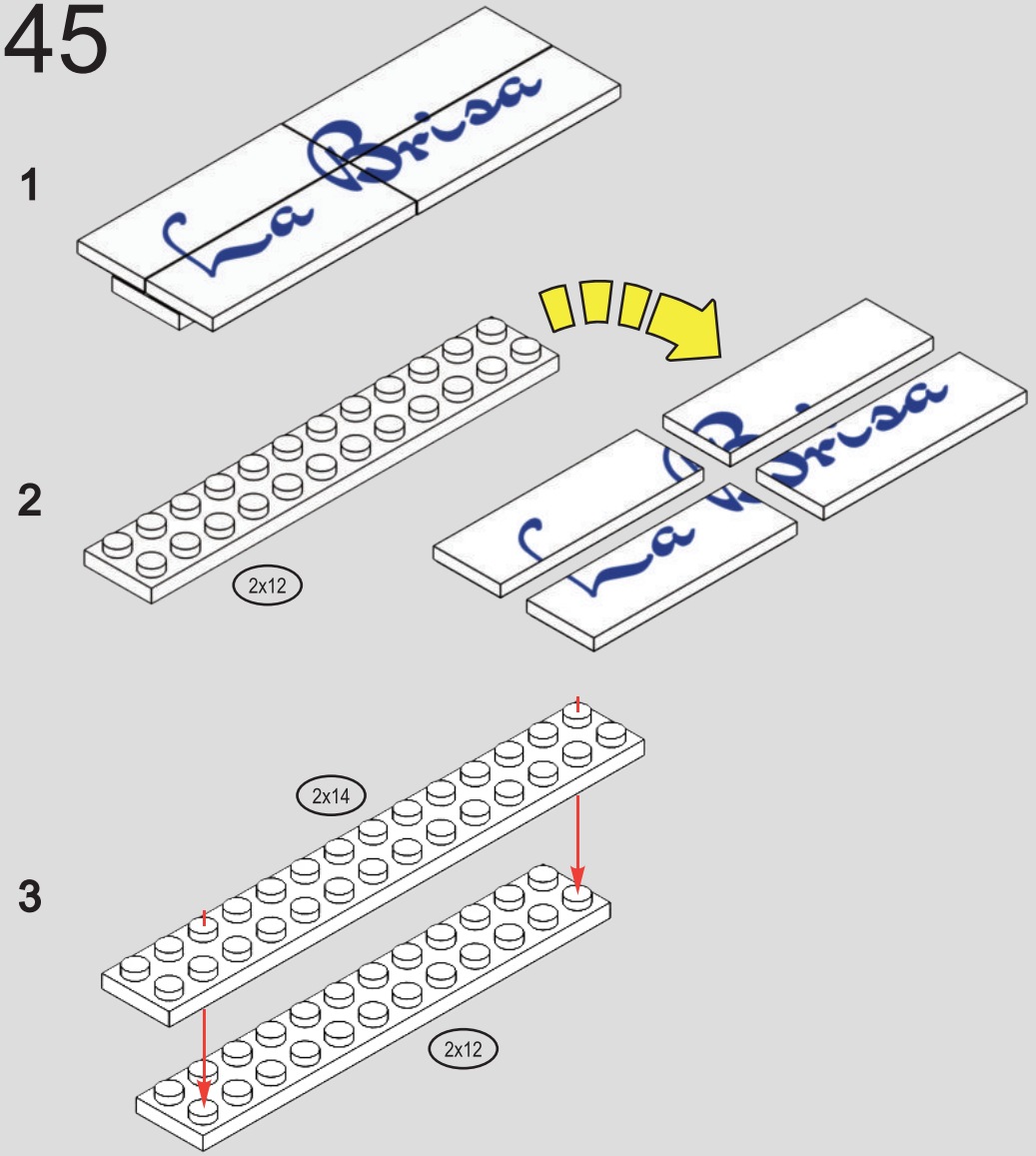

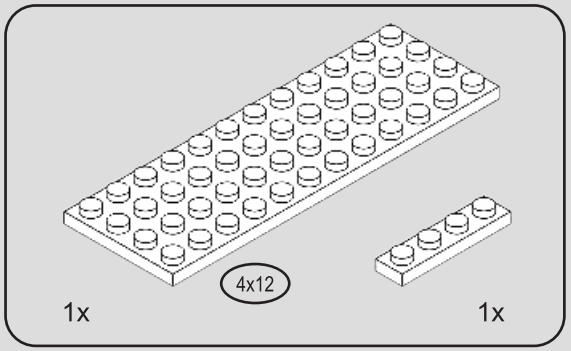

246

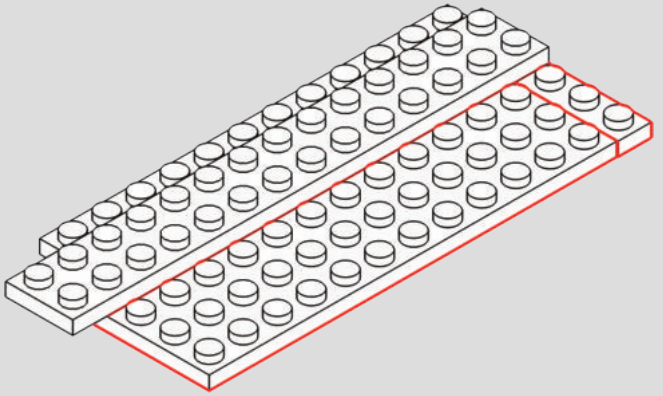

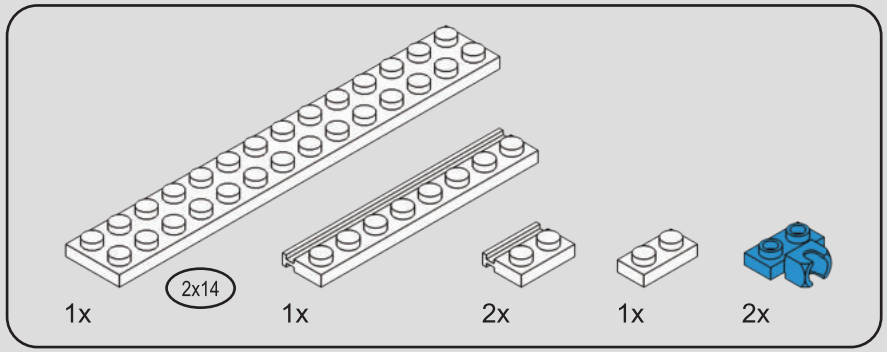

247

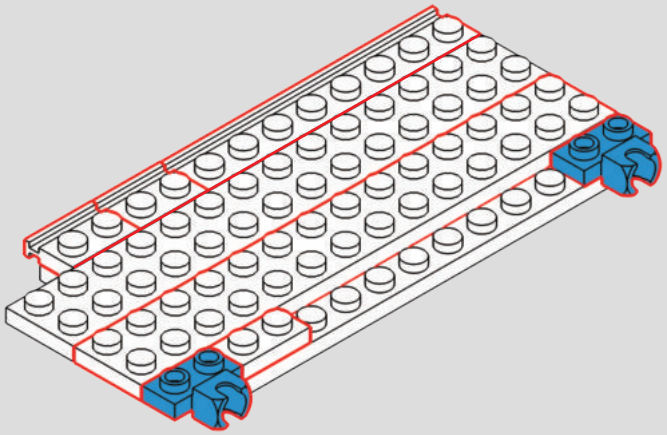

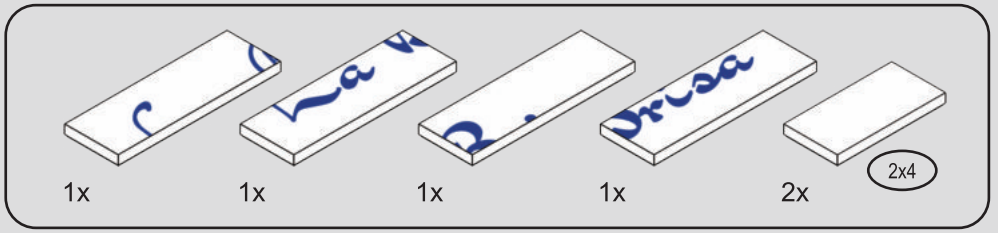

248

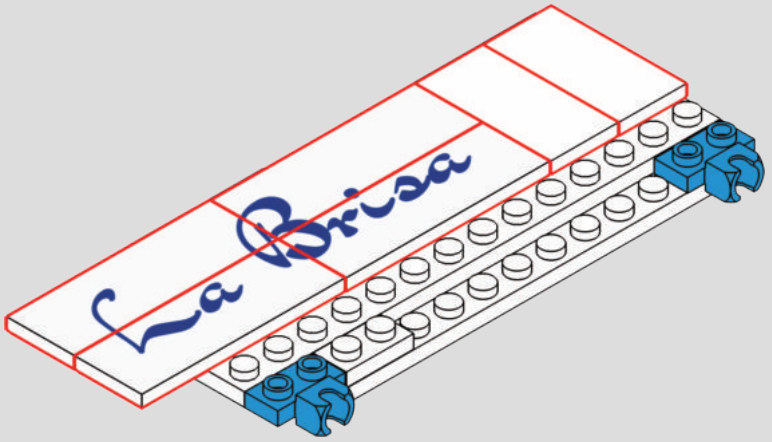

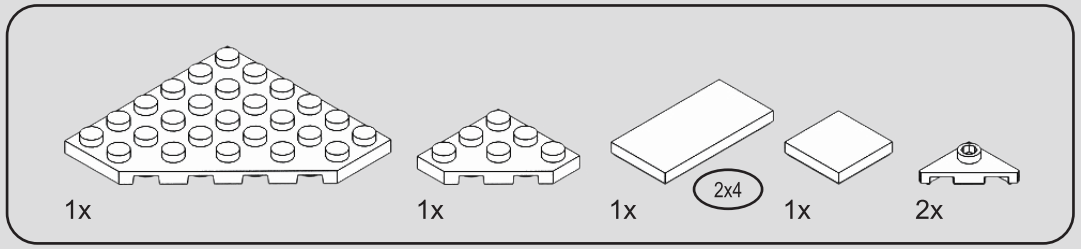

249

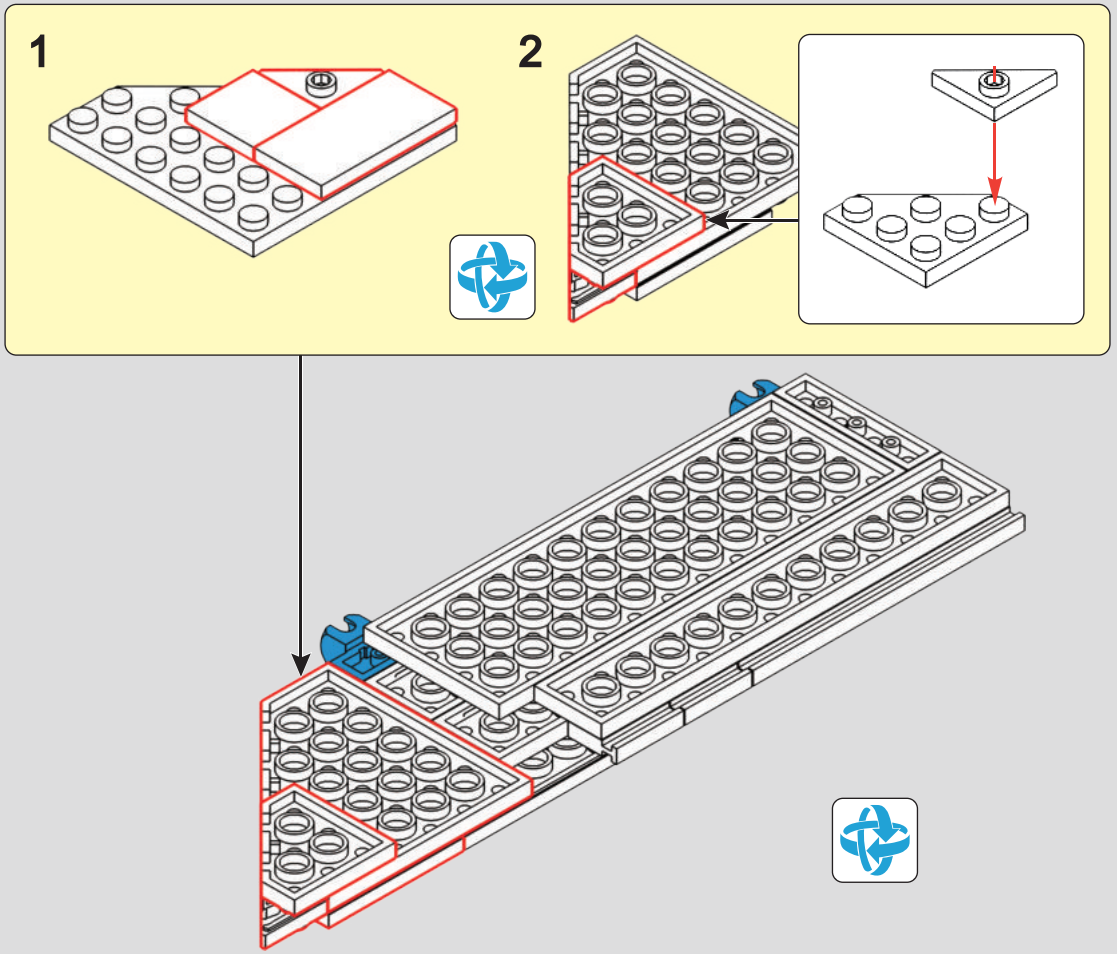

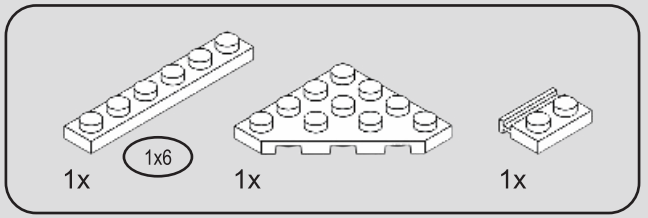

250

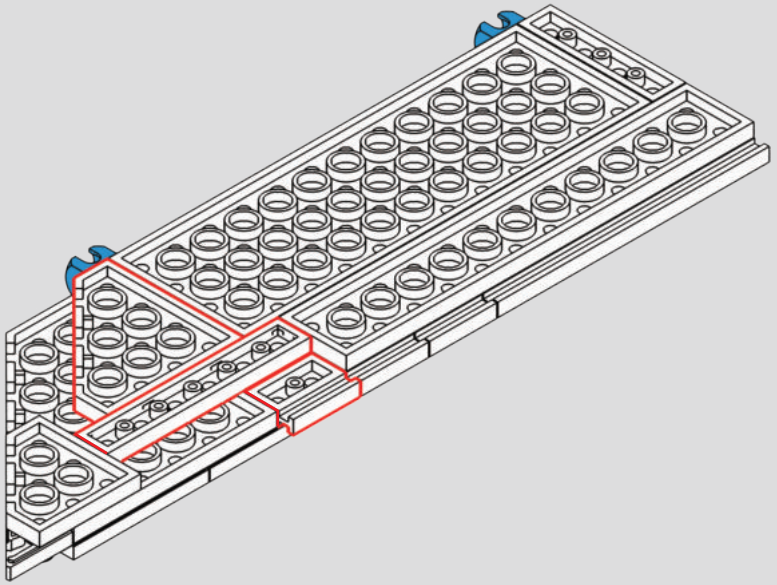

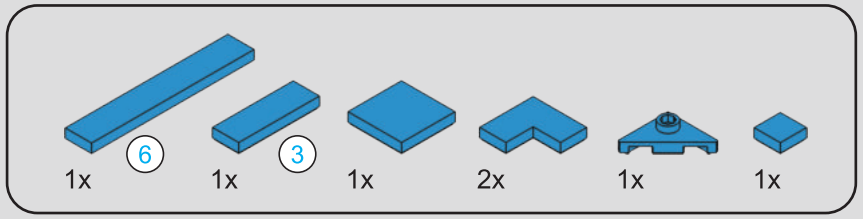

251

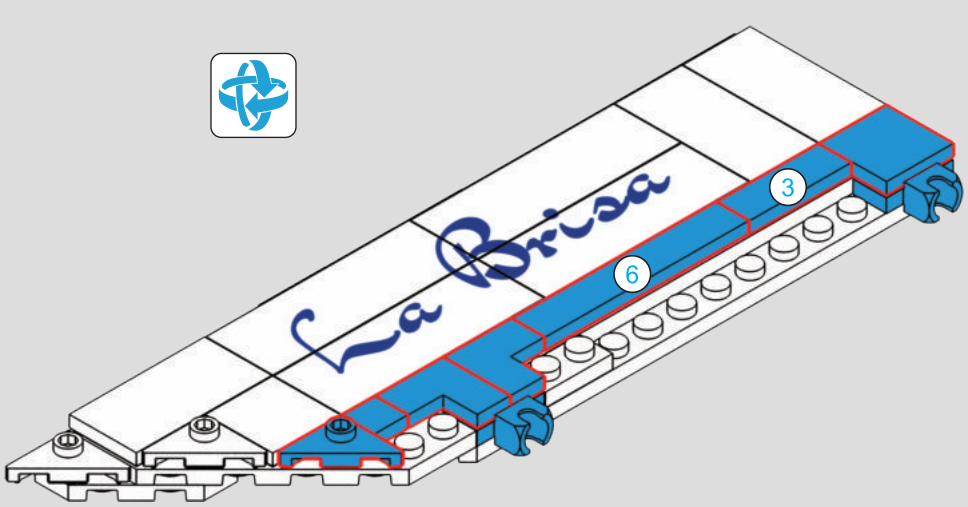



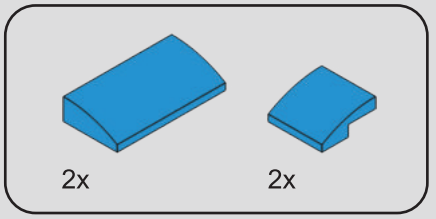

252

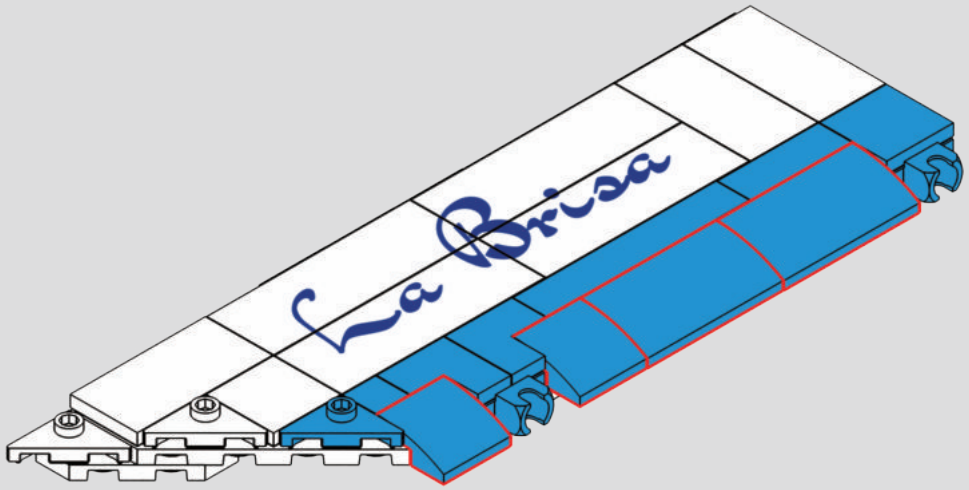

253

1

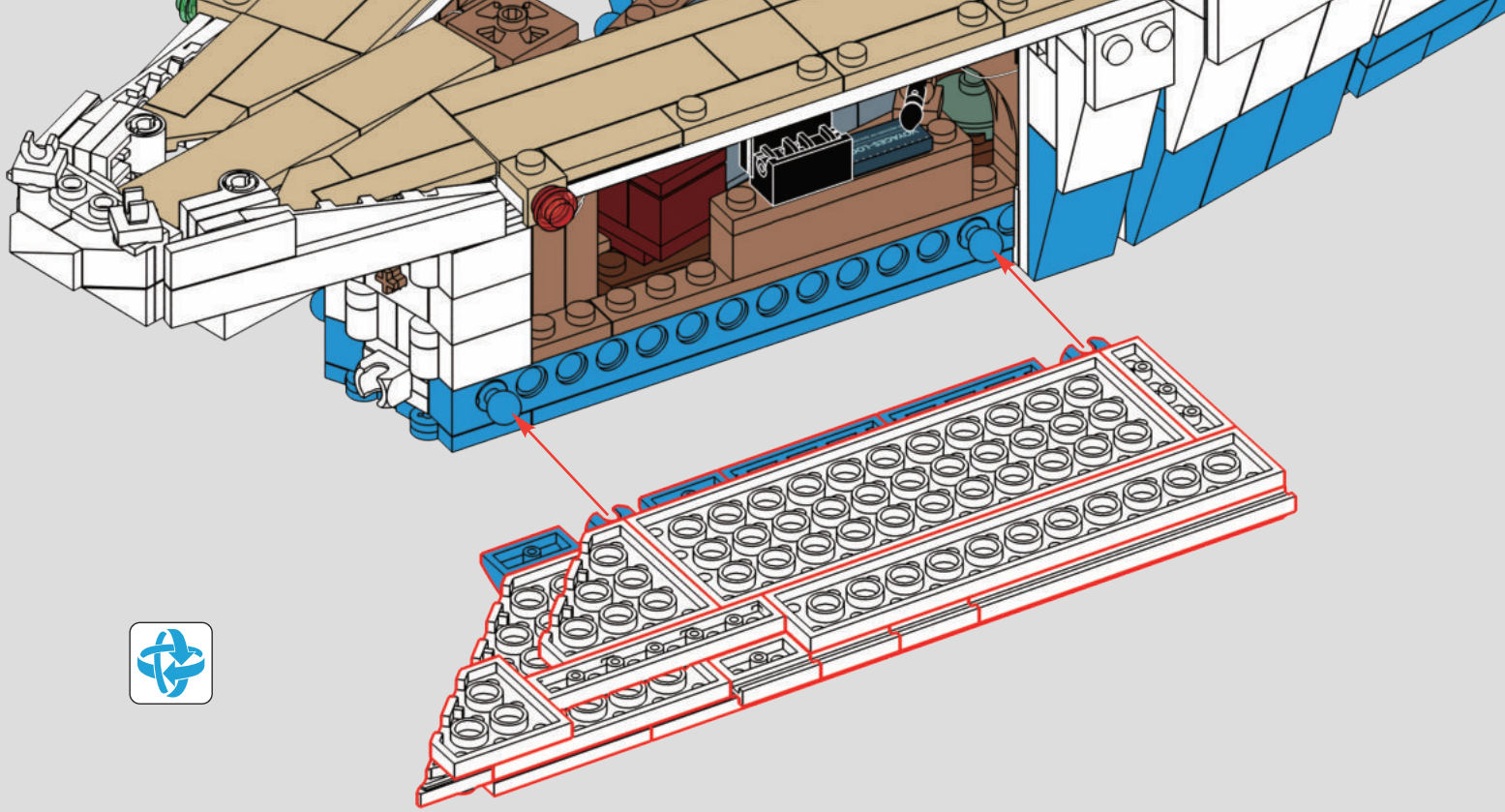

2

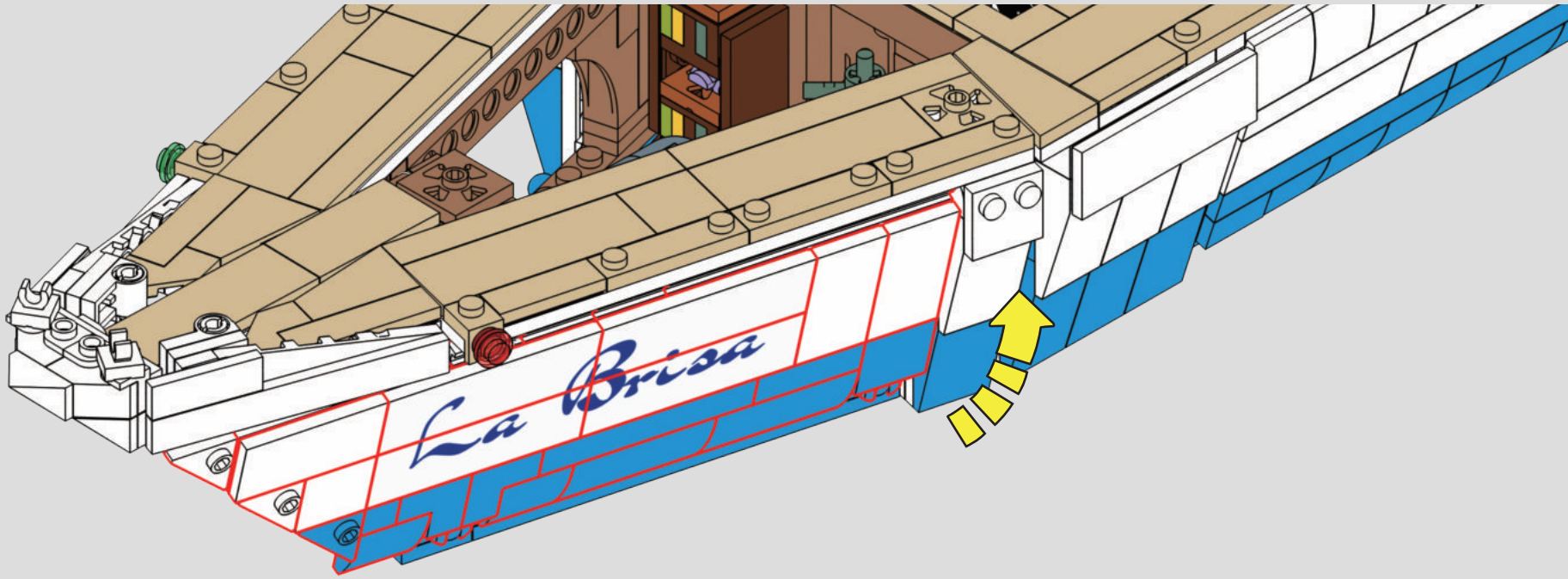

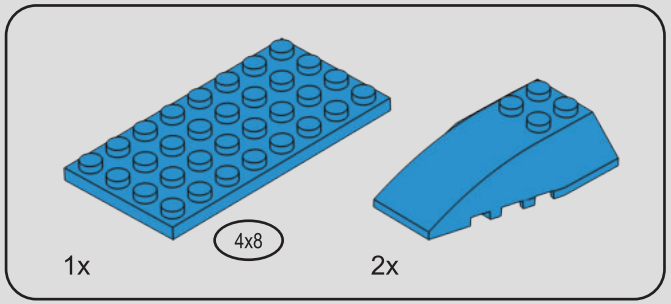

254

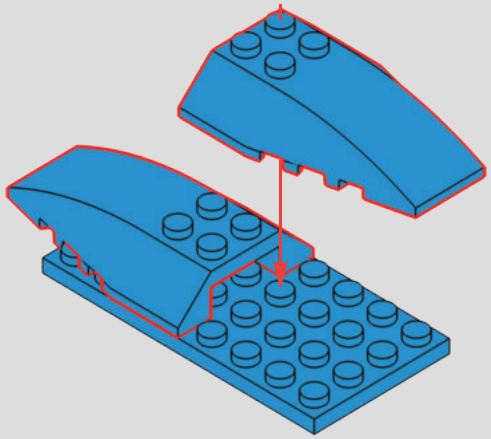

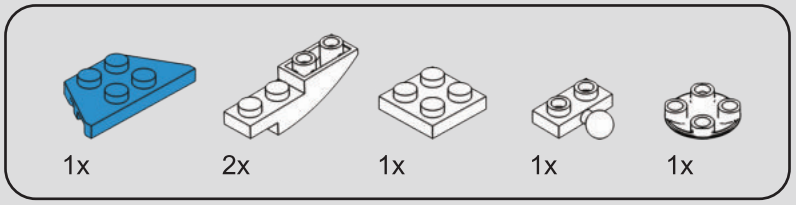

255

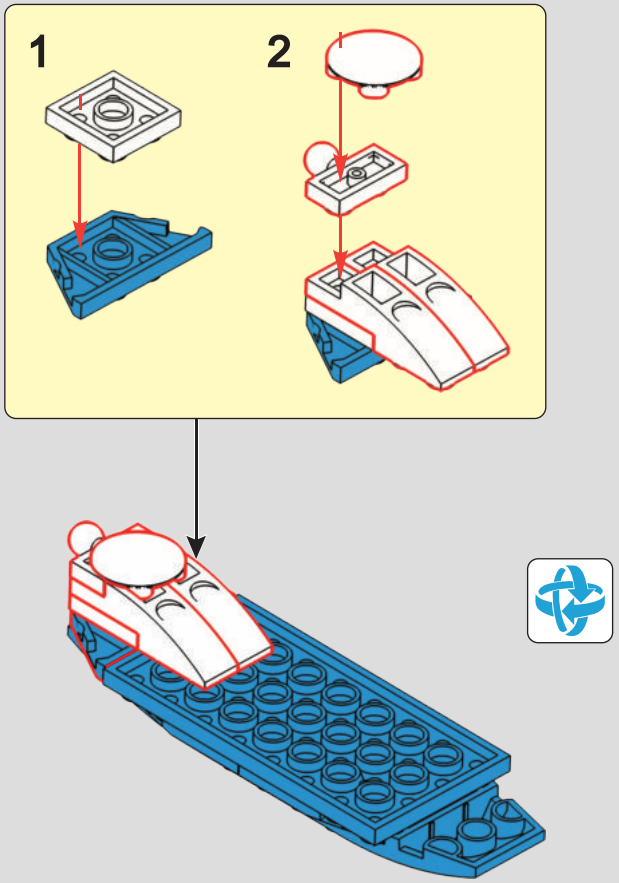

256

1

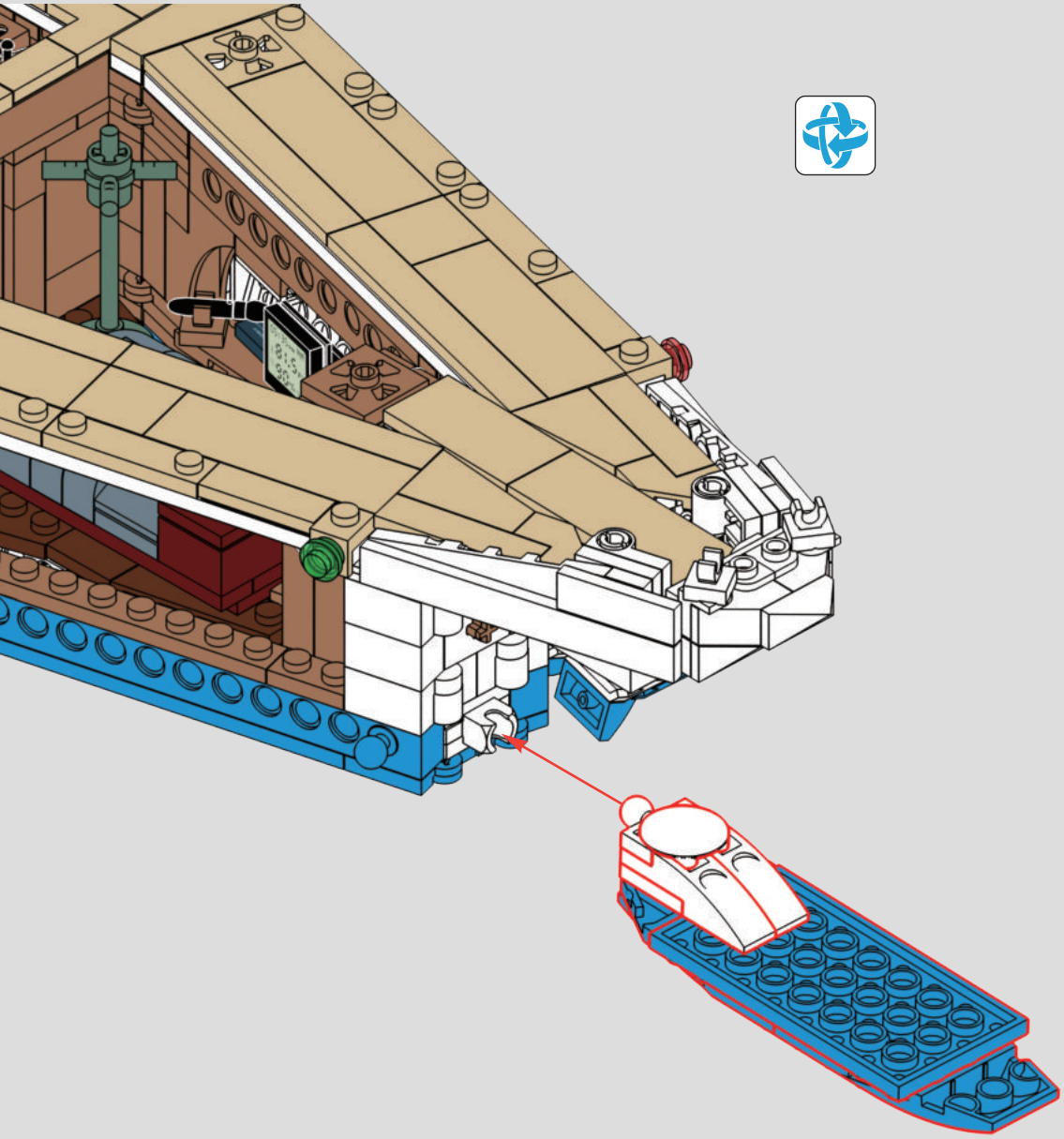

2

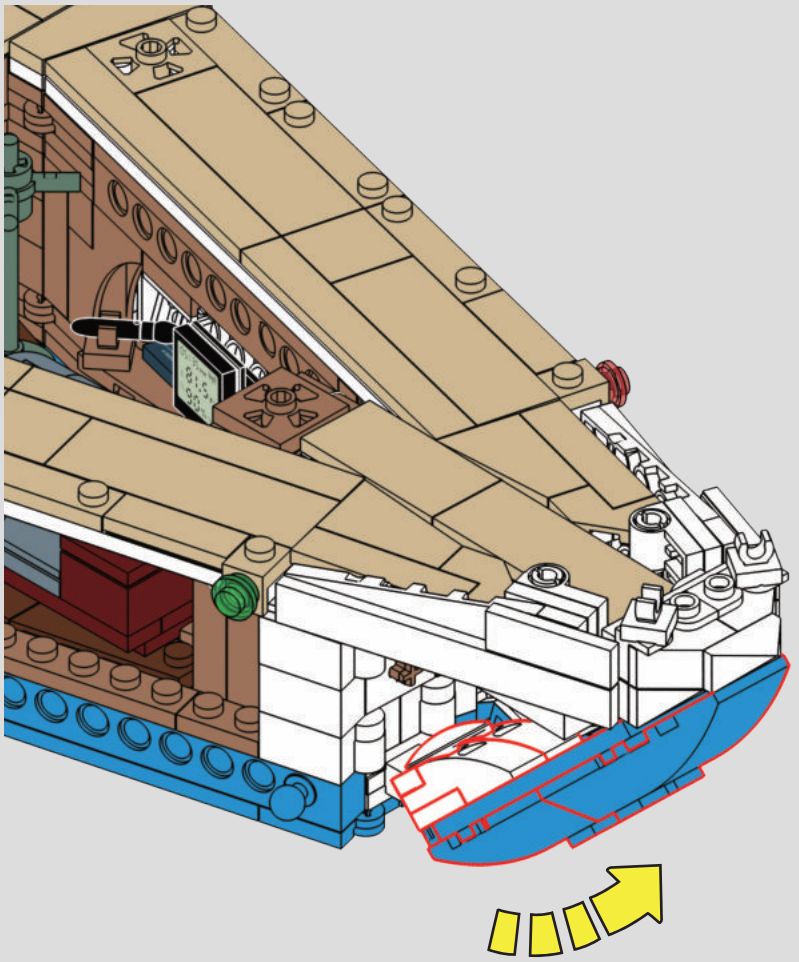

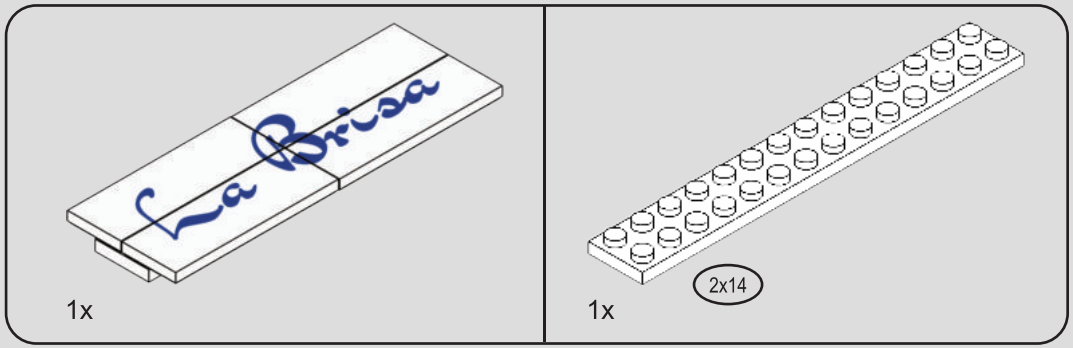

257

1

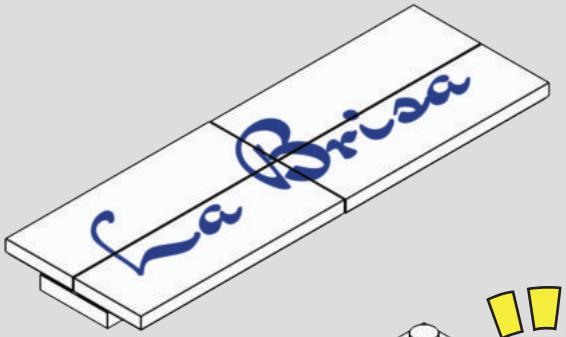

2

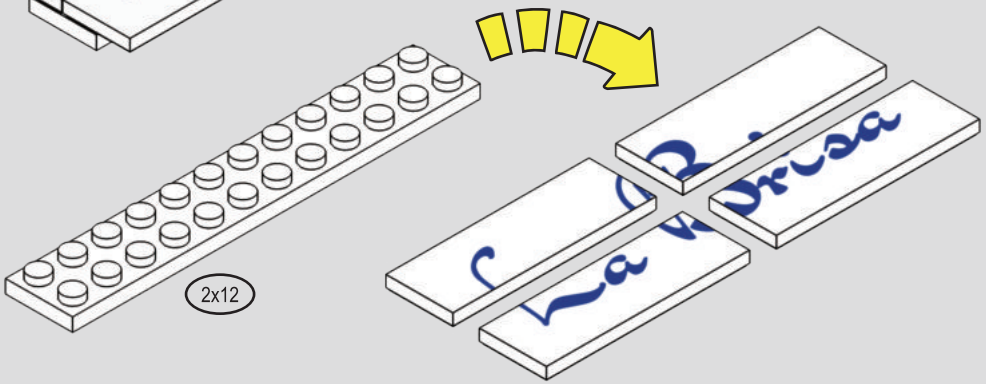

3

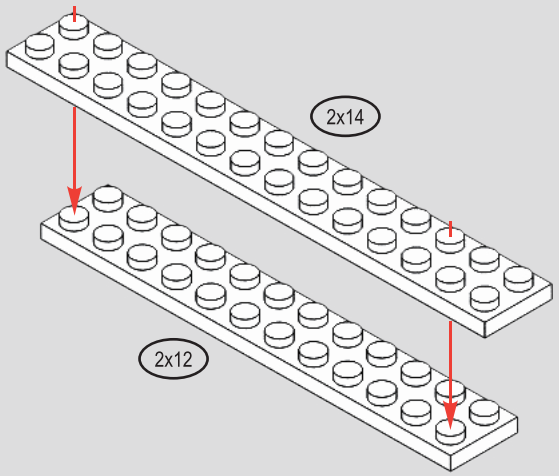

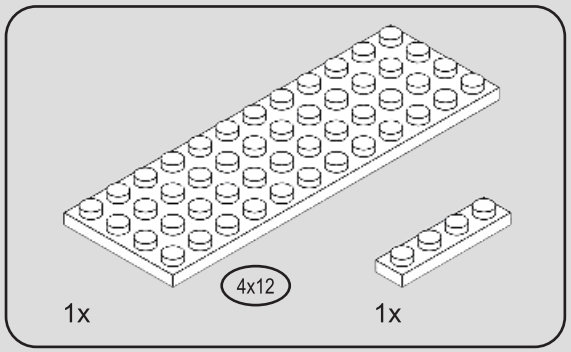

258

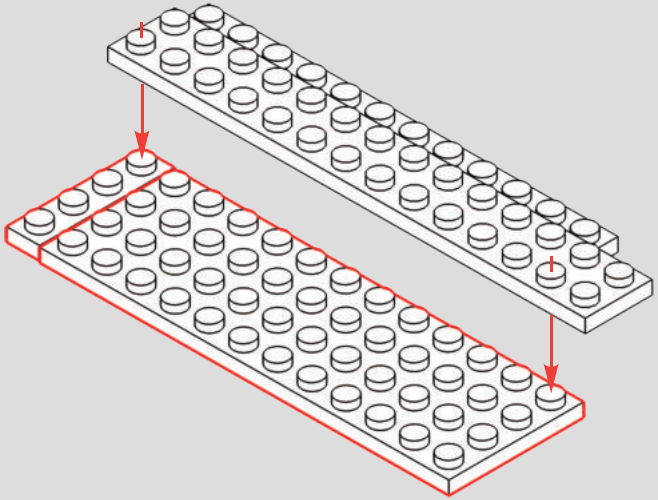

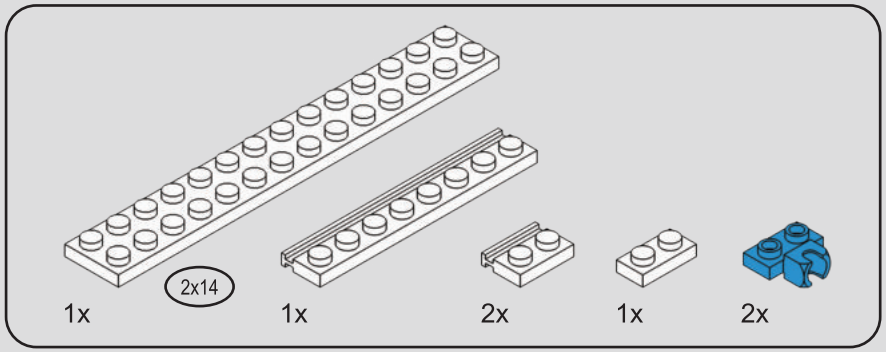

259

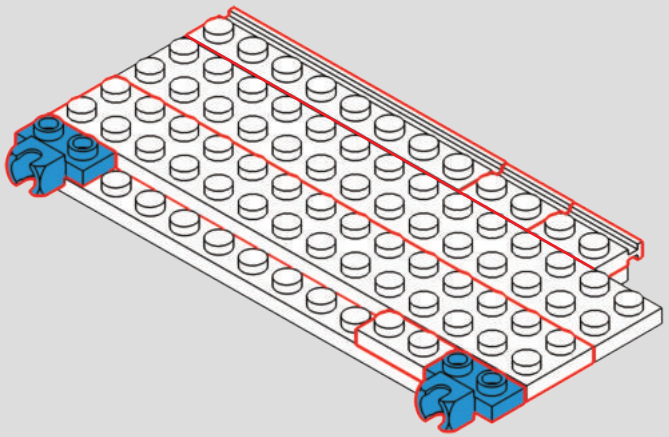

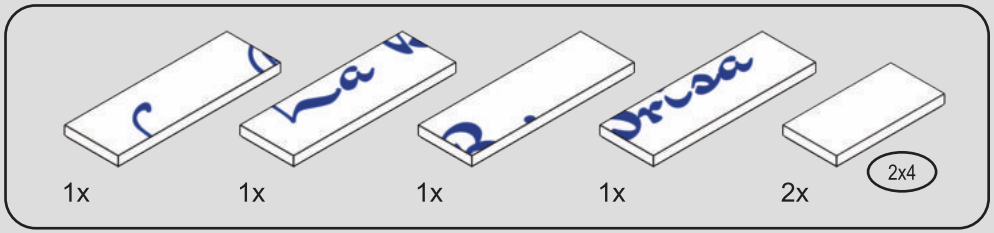

260

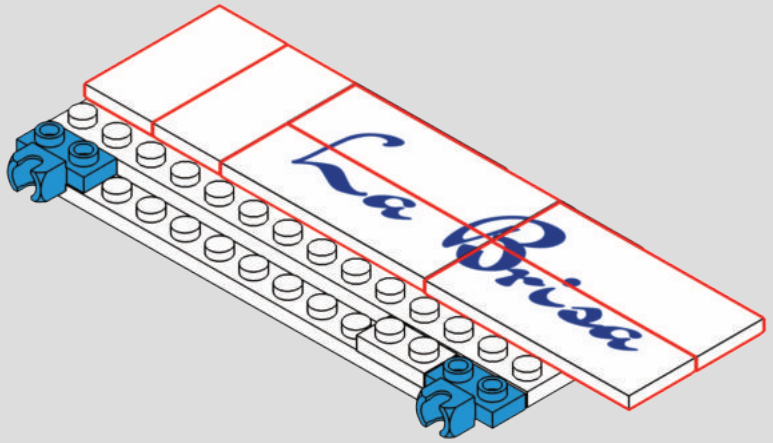

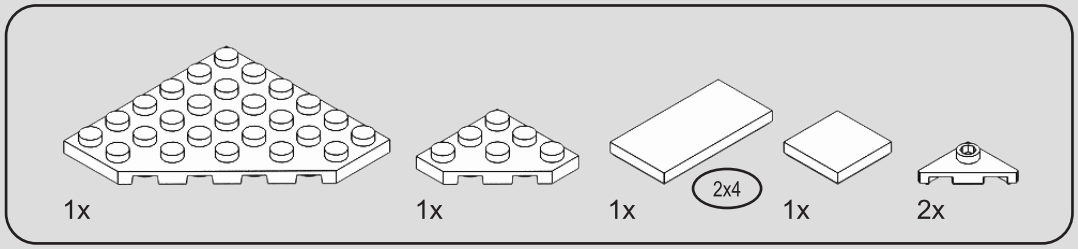

261

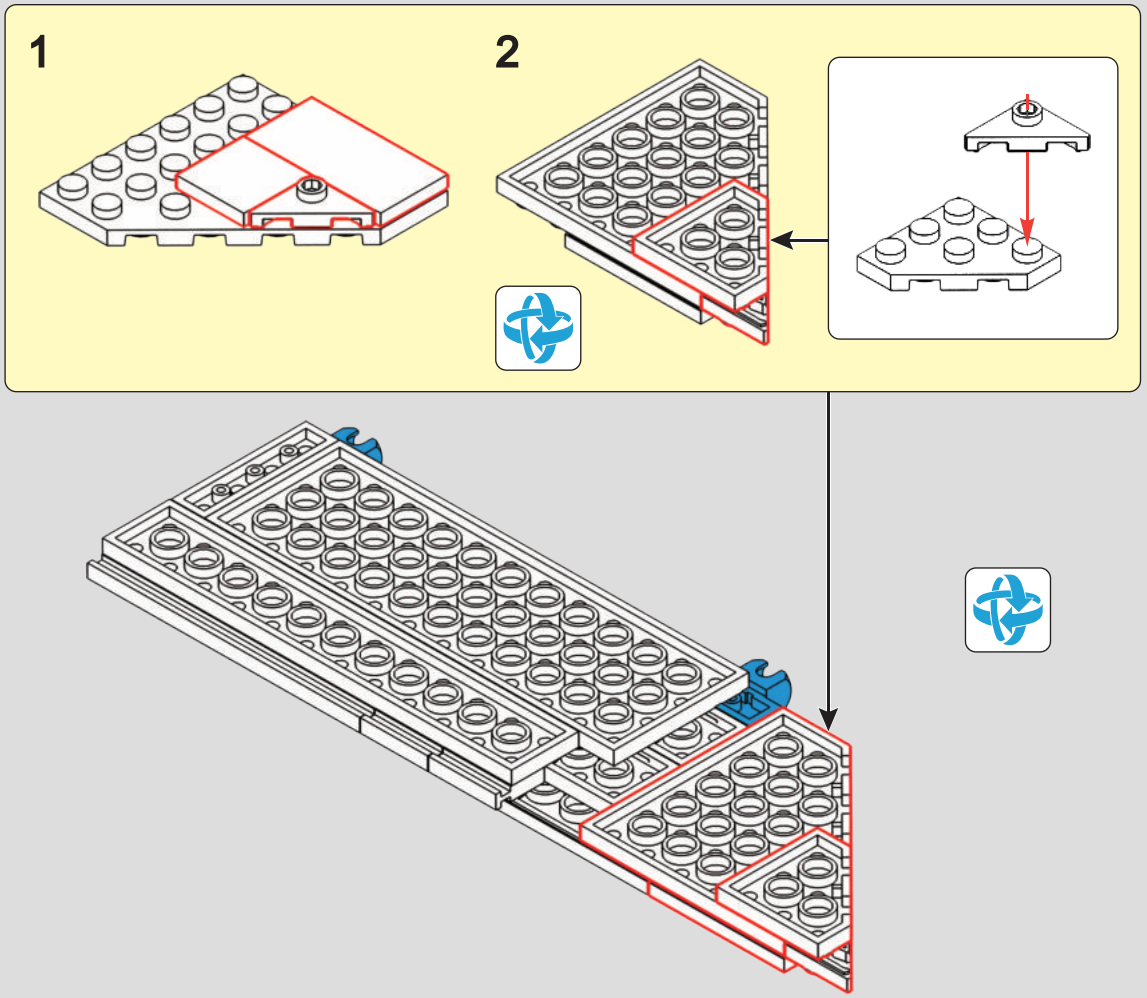

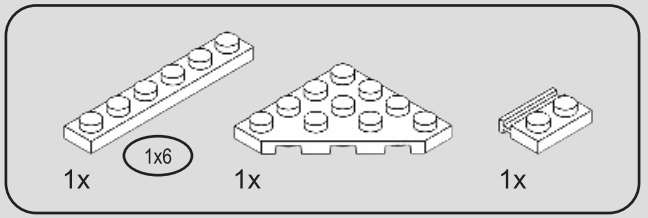

262

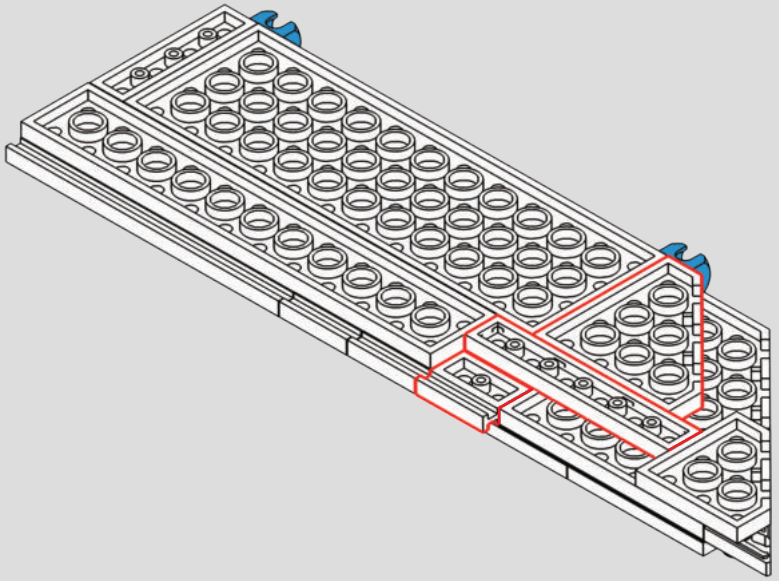

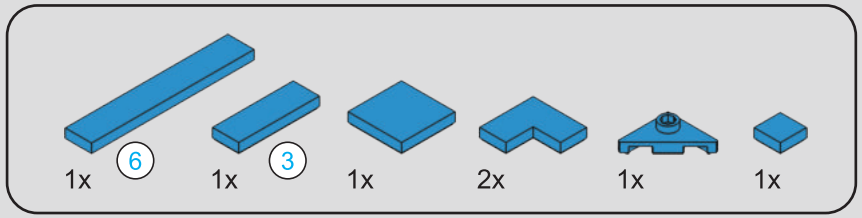

263

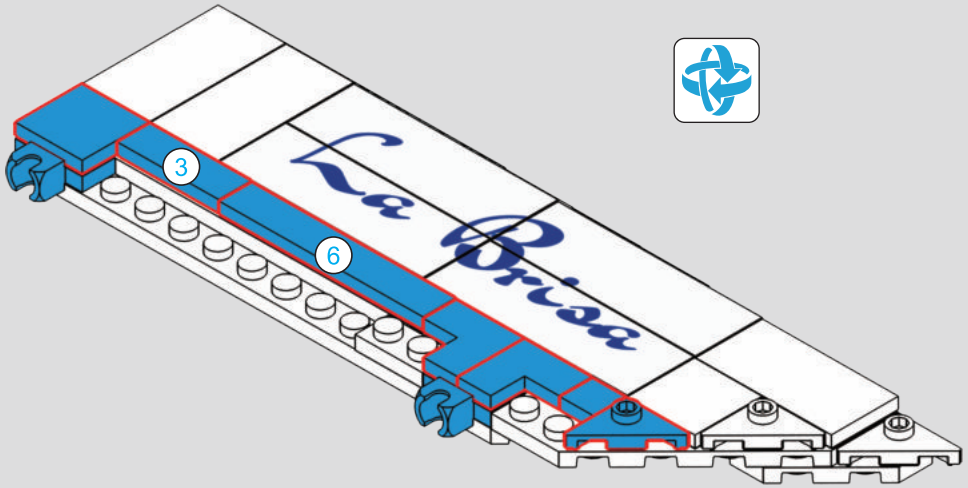



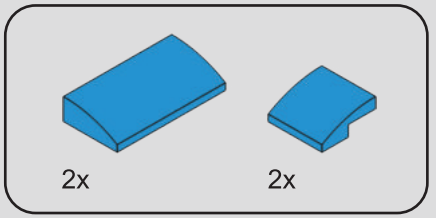

264

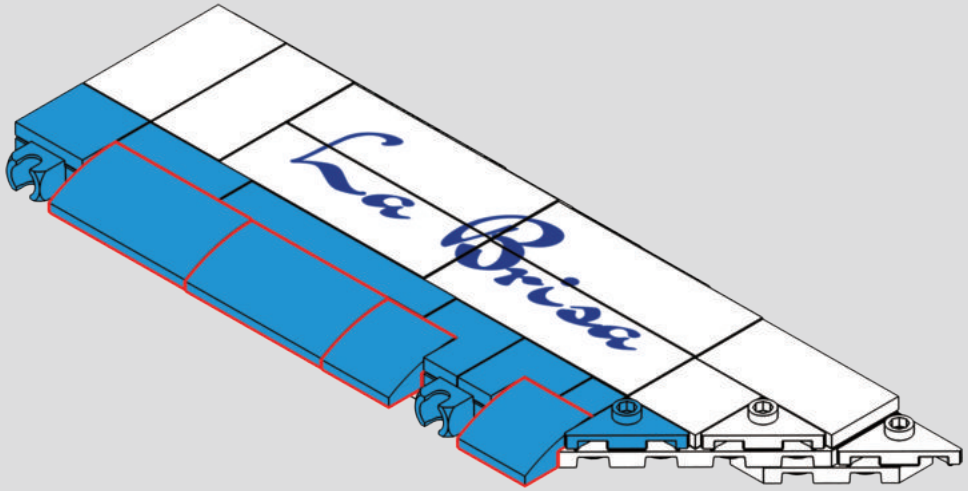

265

1

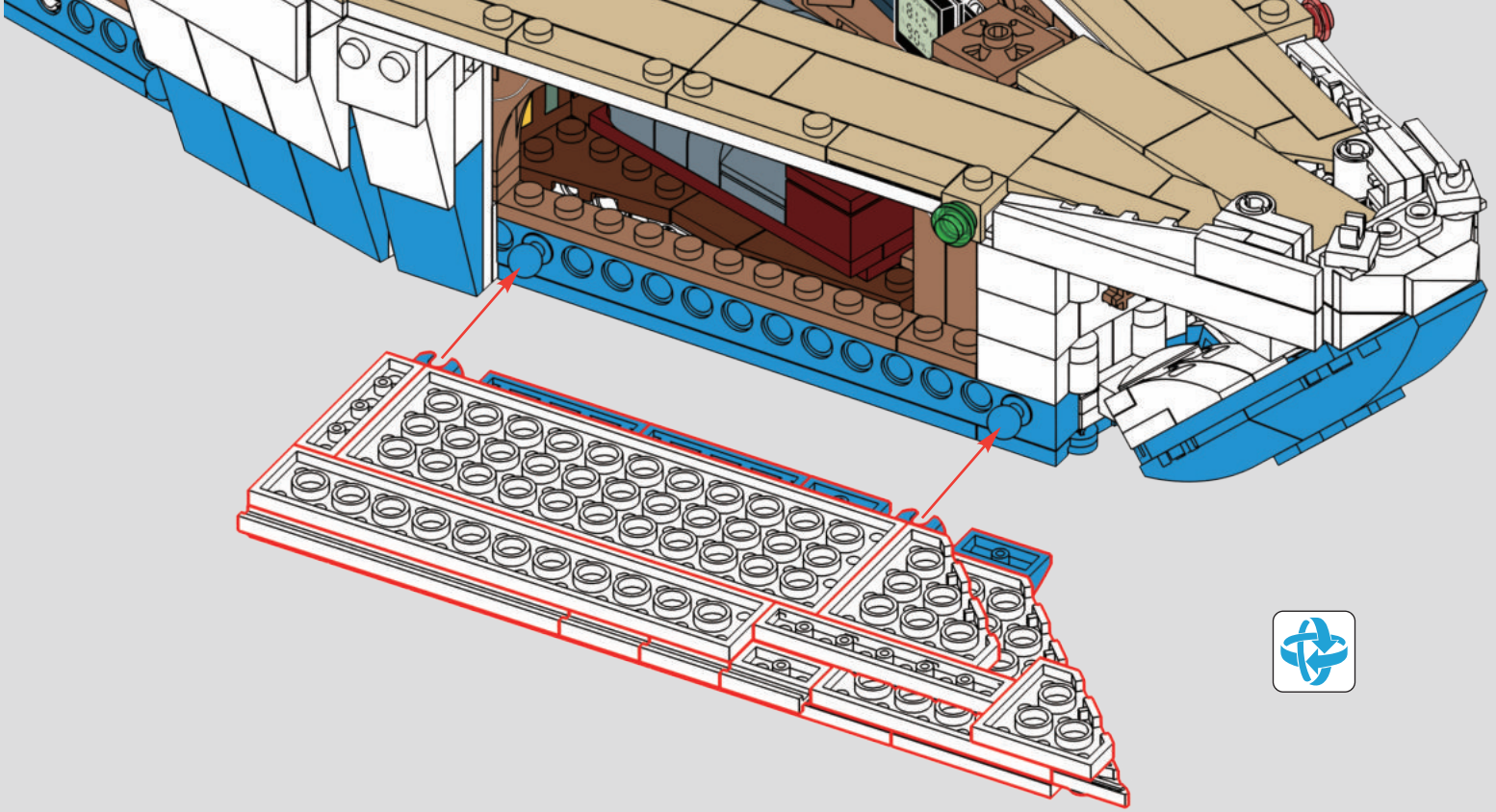

2

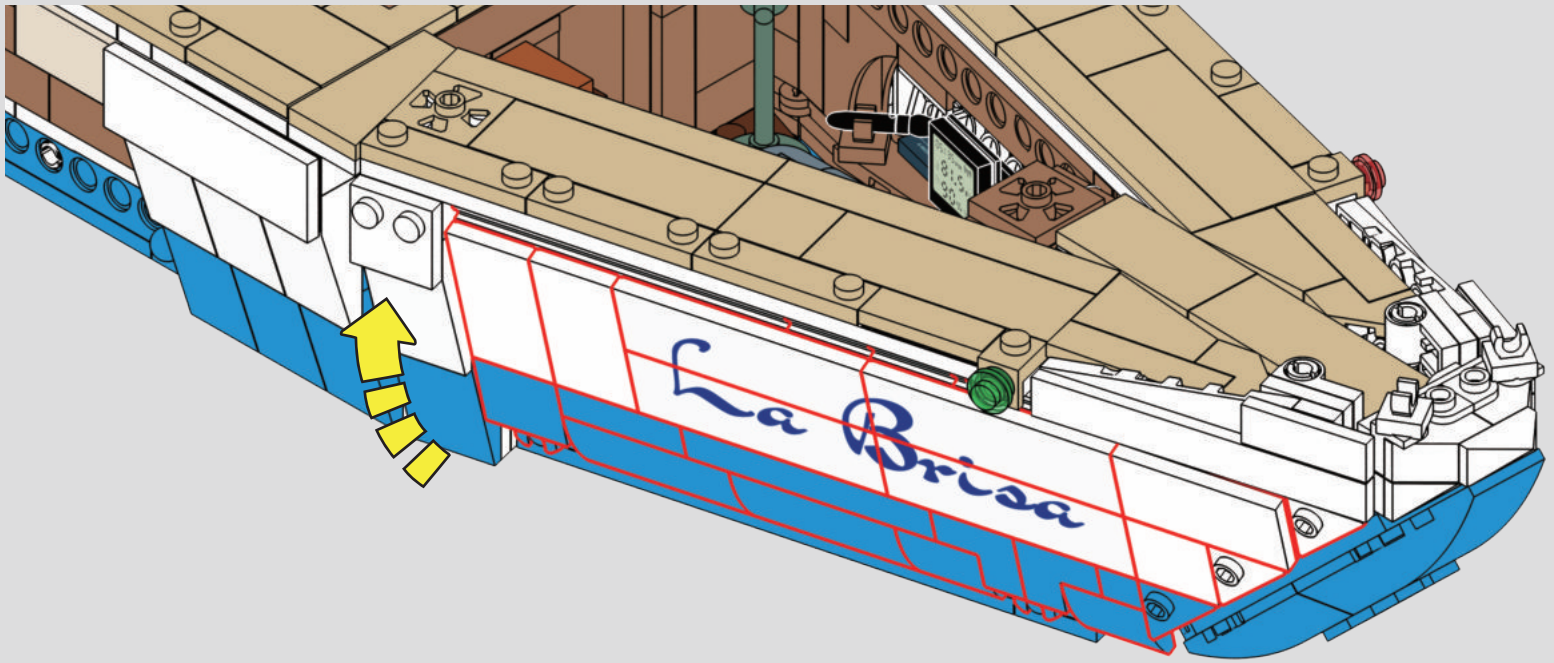

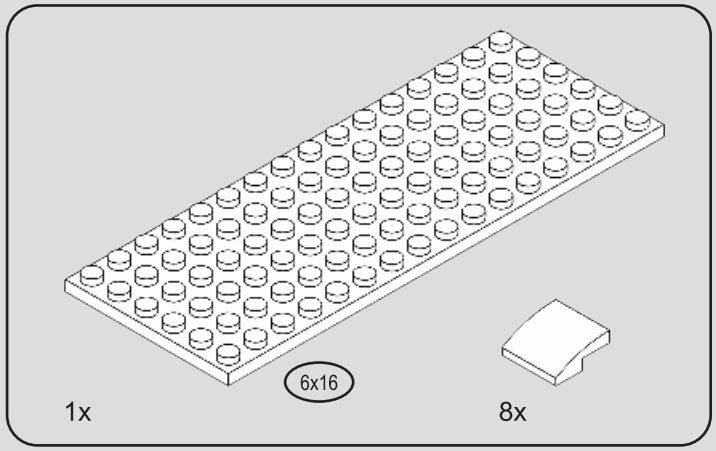

266

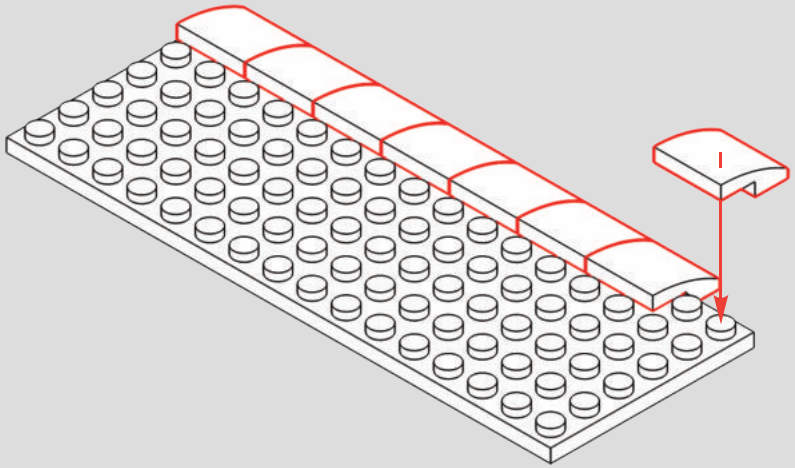

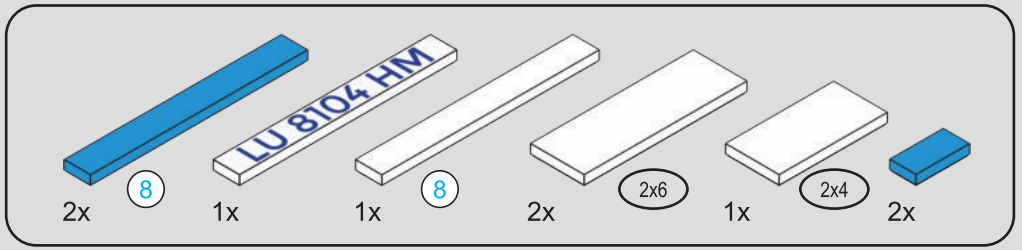

267

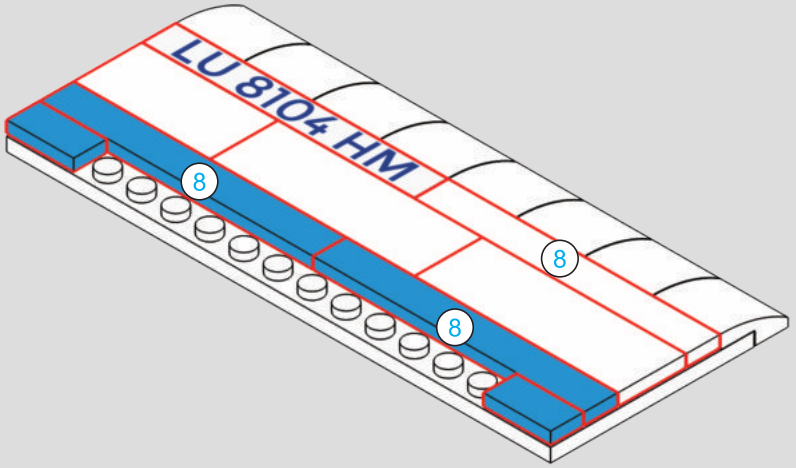

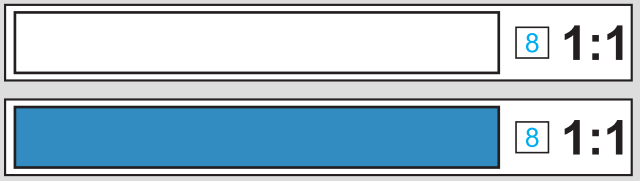

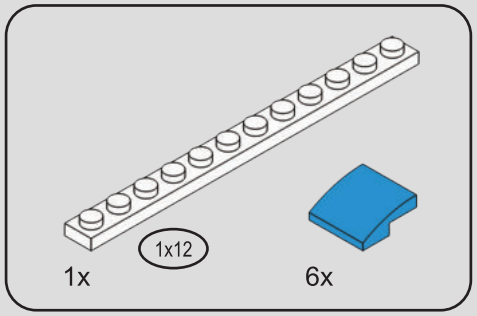

268

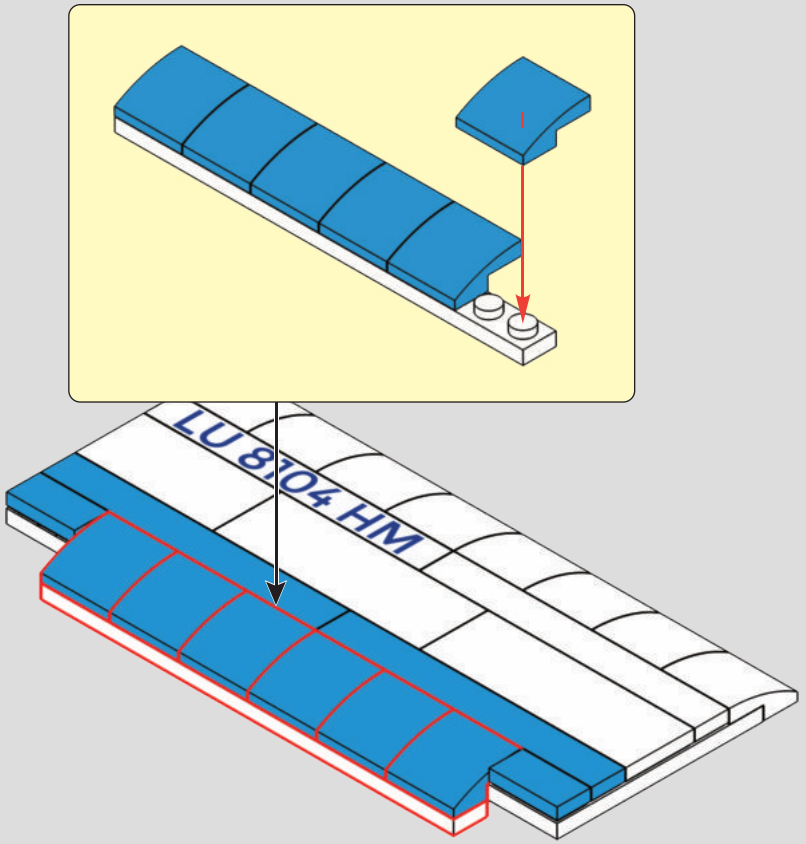

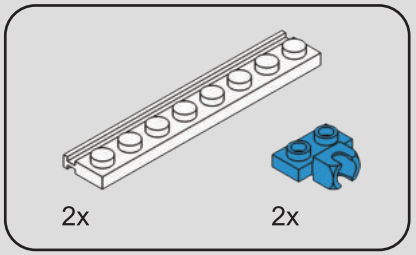

269

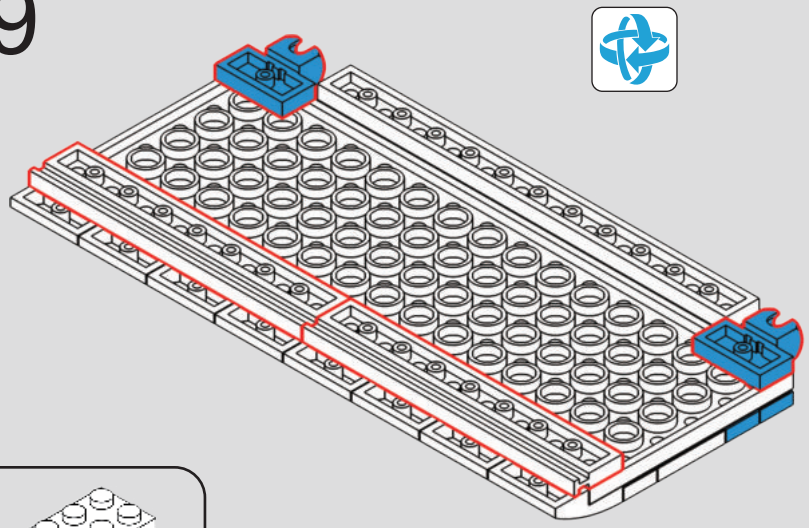

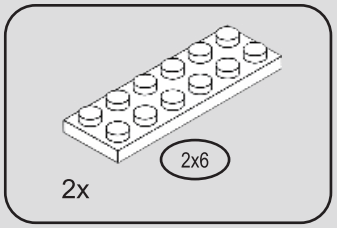

270

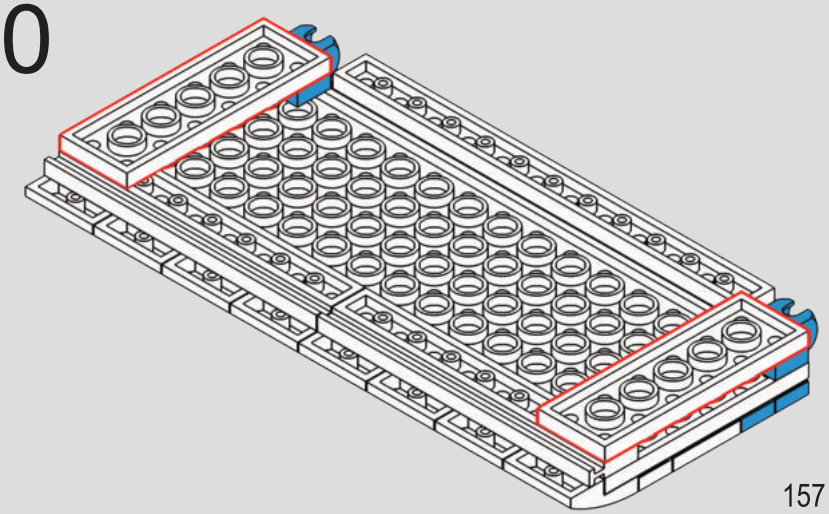

271

1

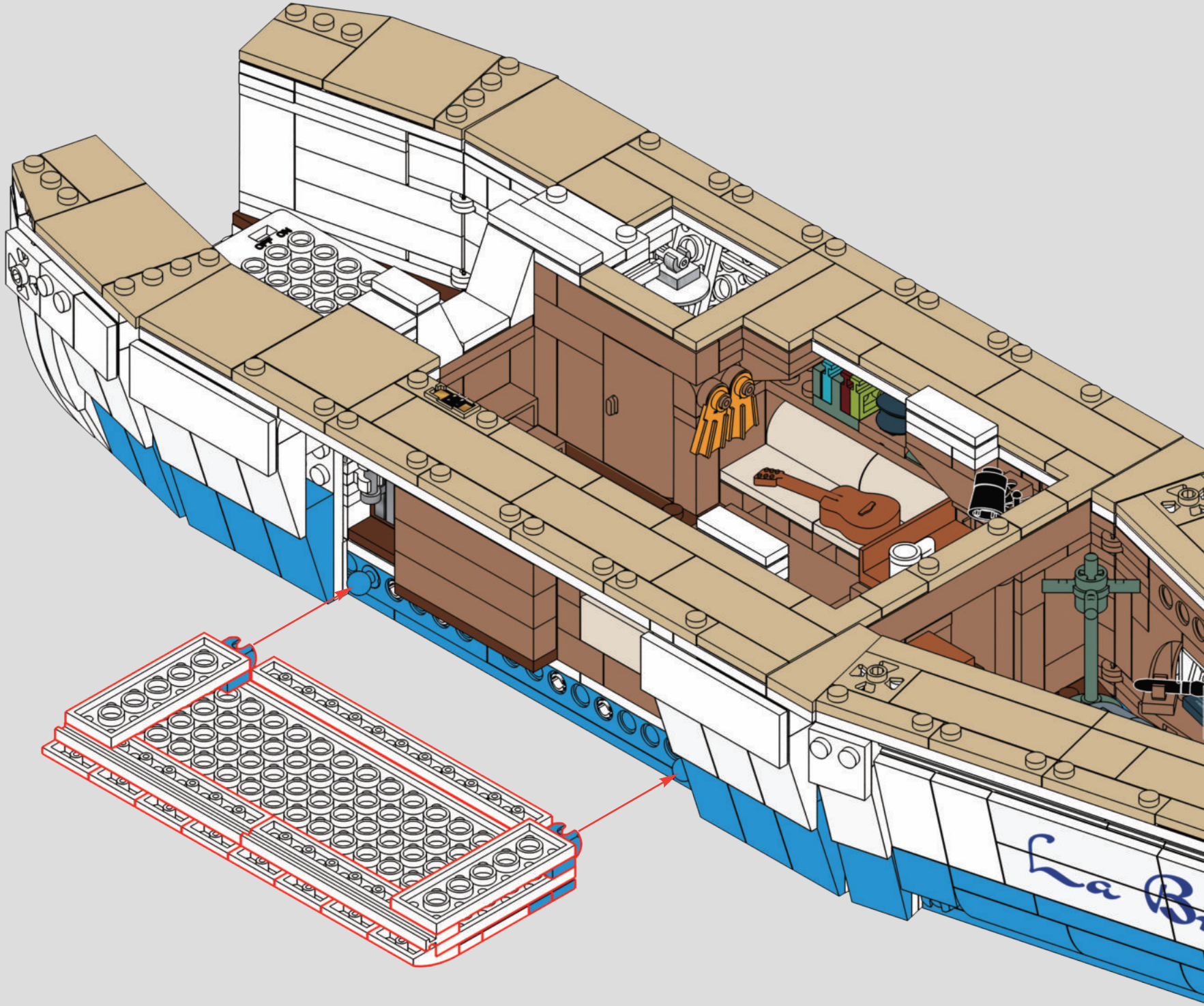

2

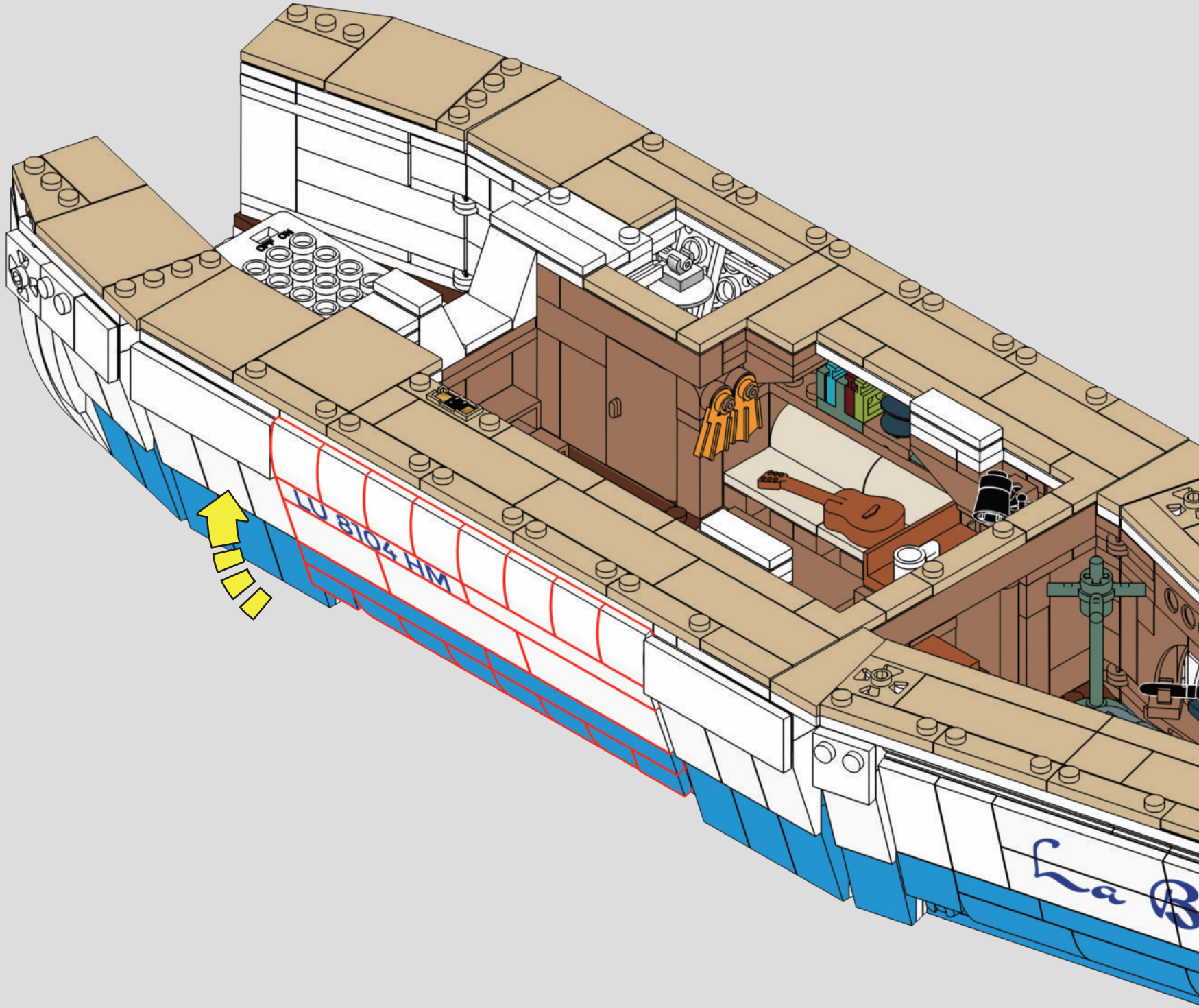

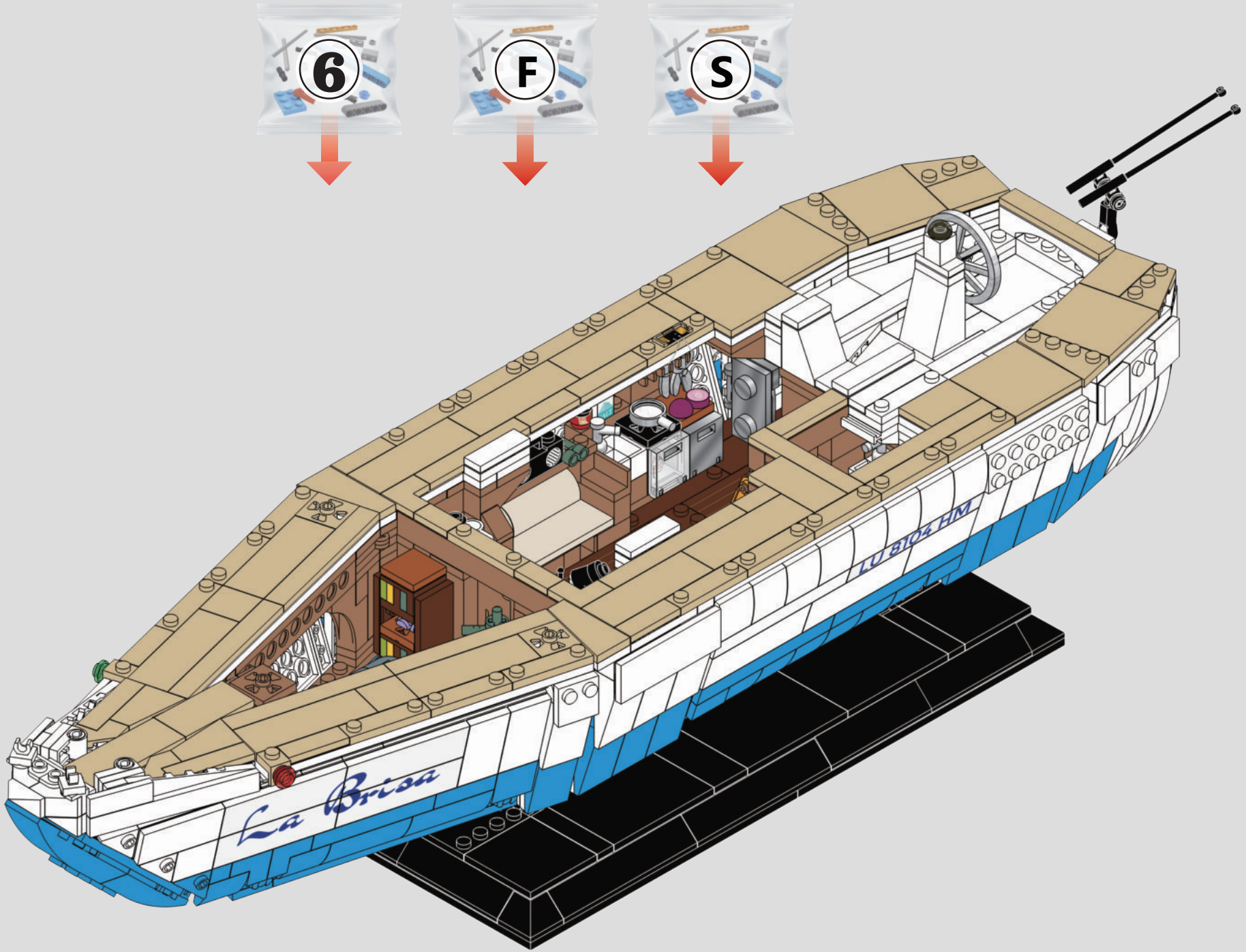
6
F
S
La Brisa
LU 8104 HM

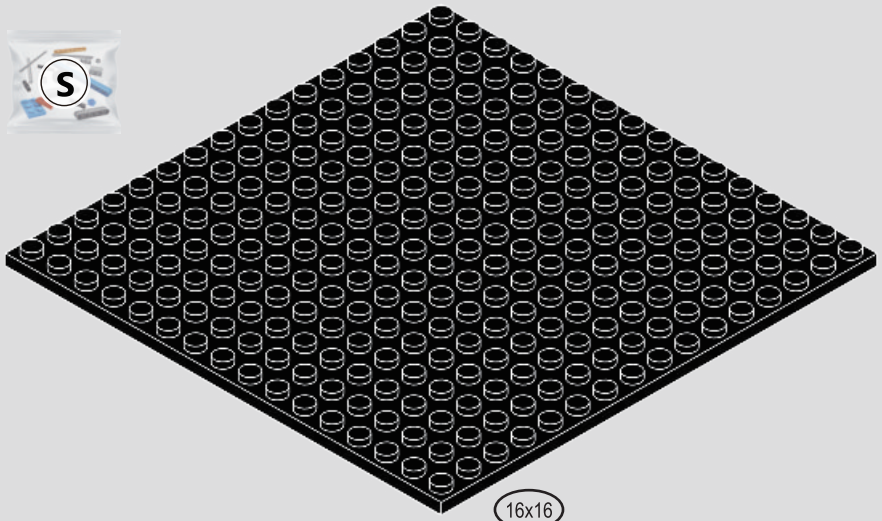

1x

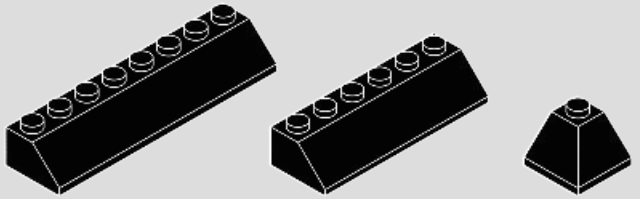

4x 2x 2x

272

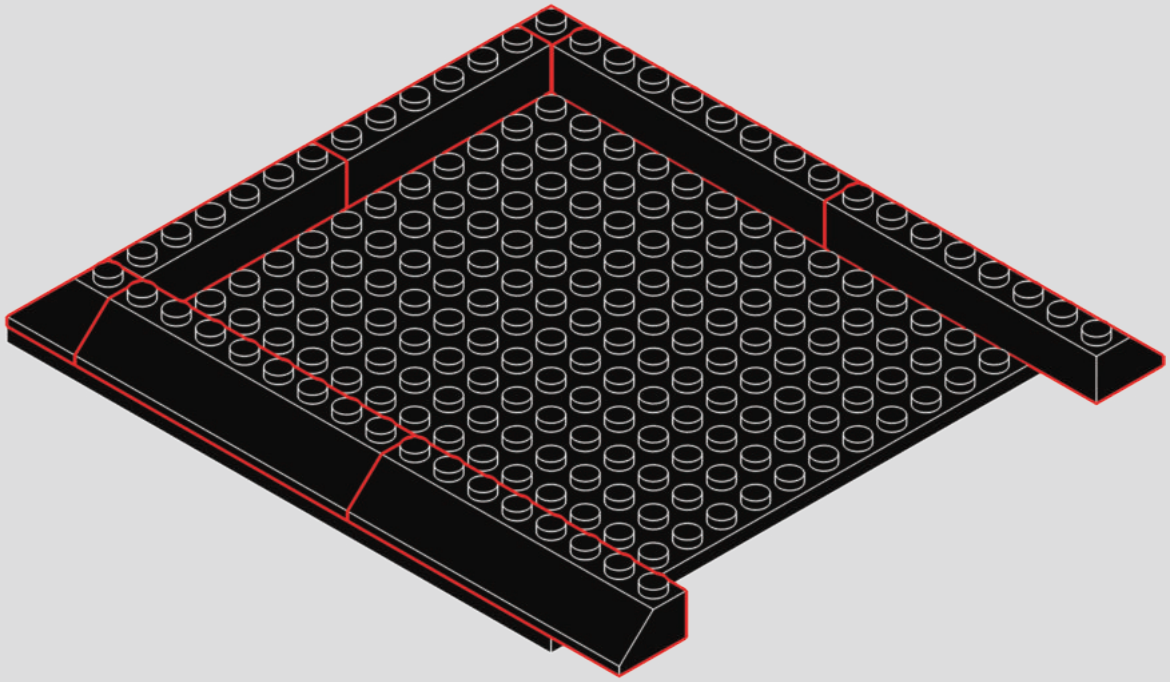

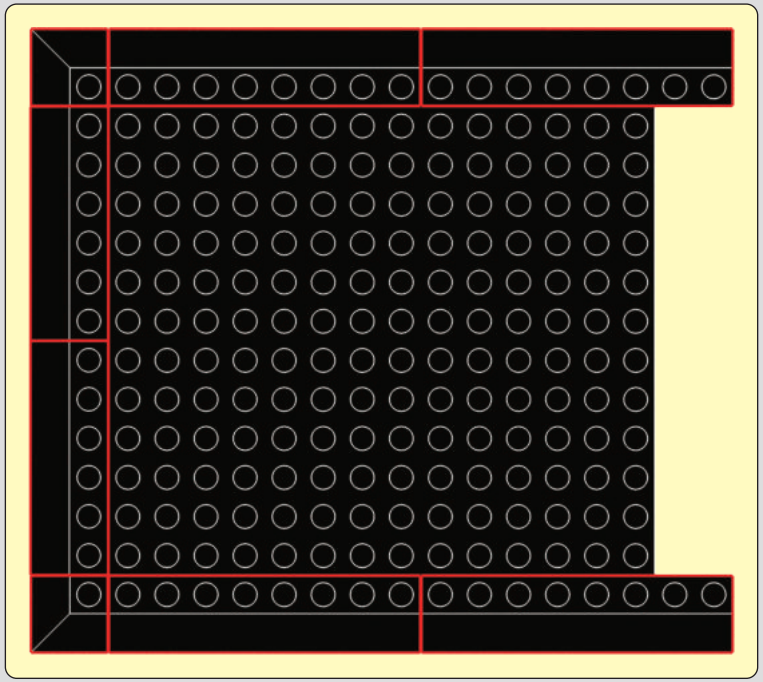

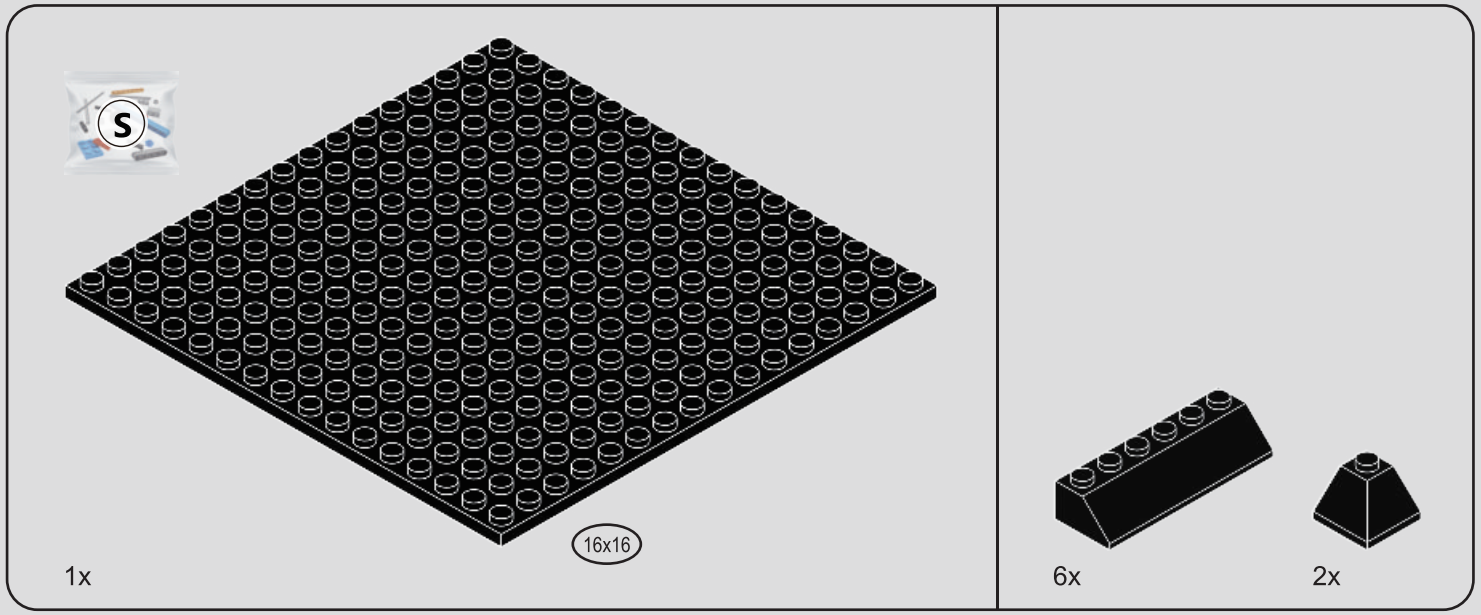

273

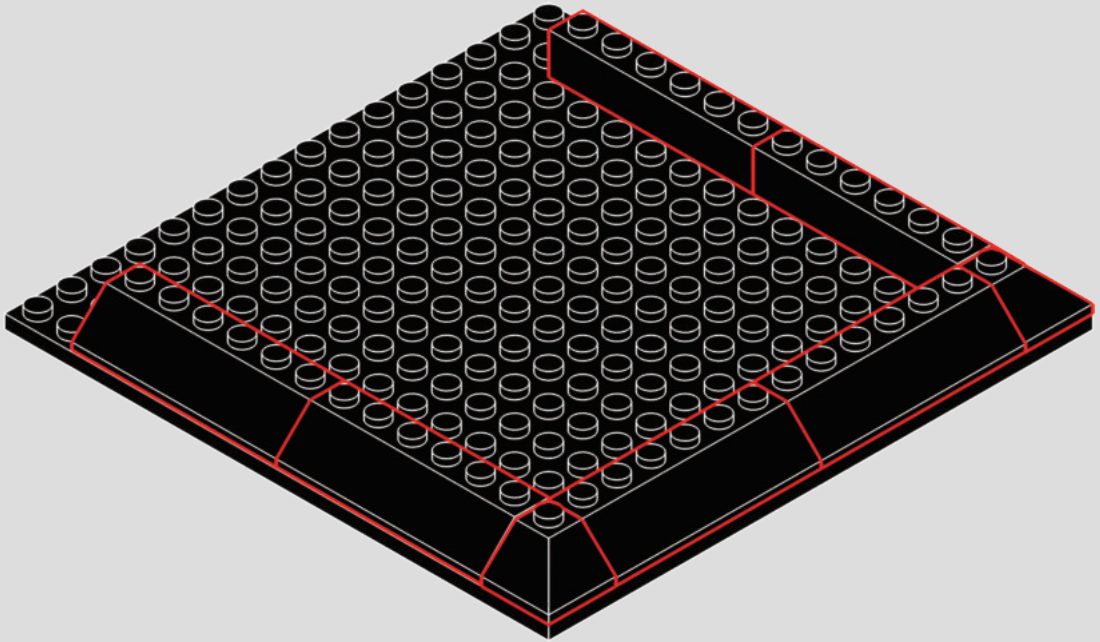

274

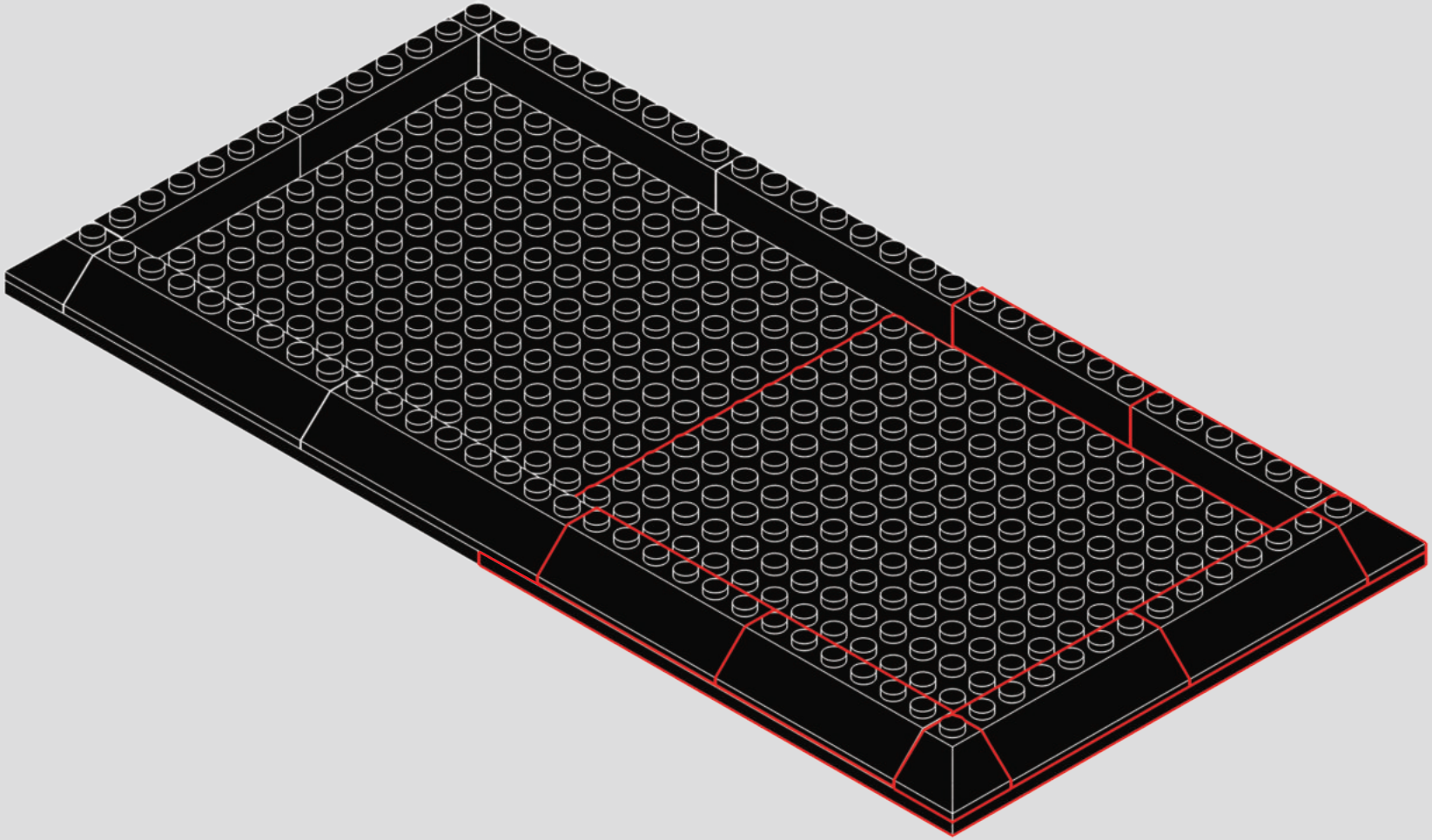

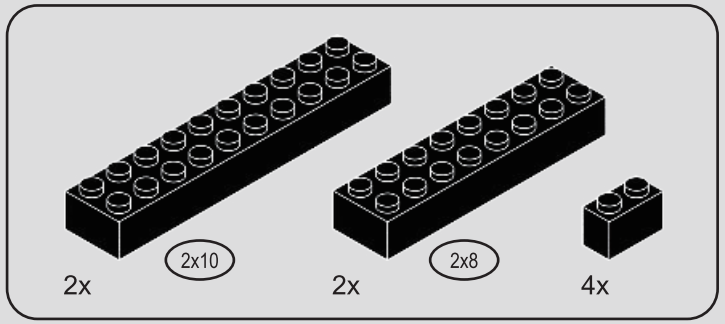

275

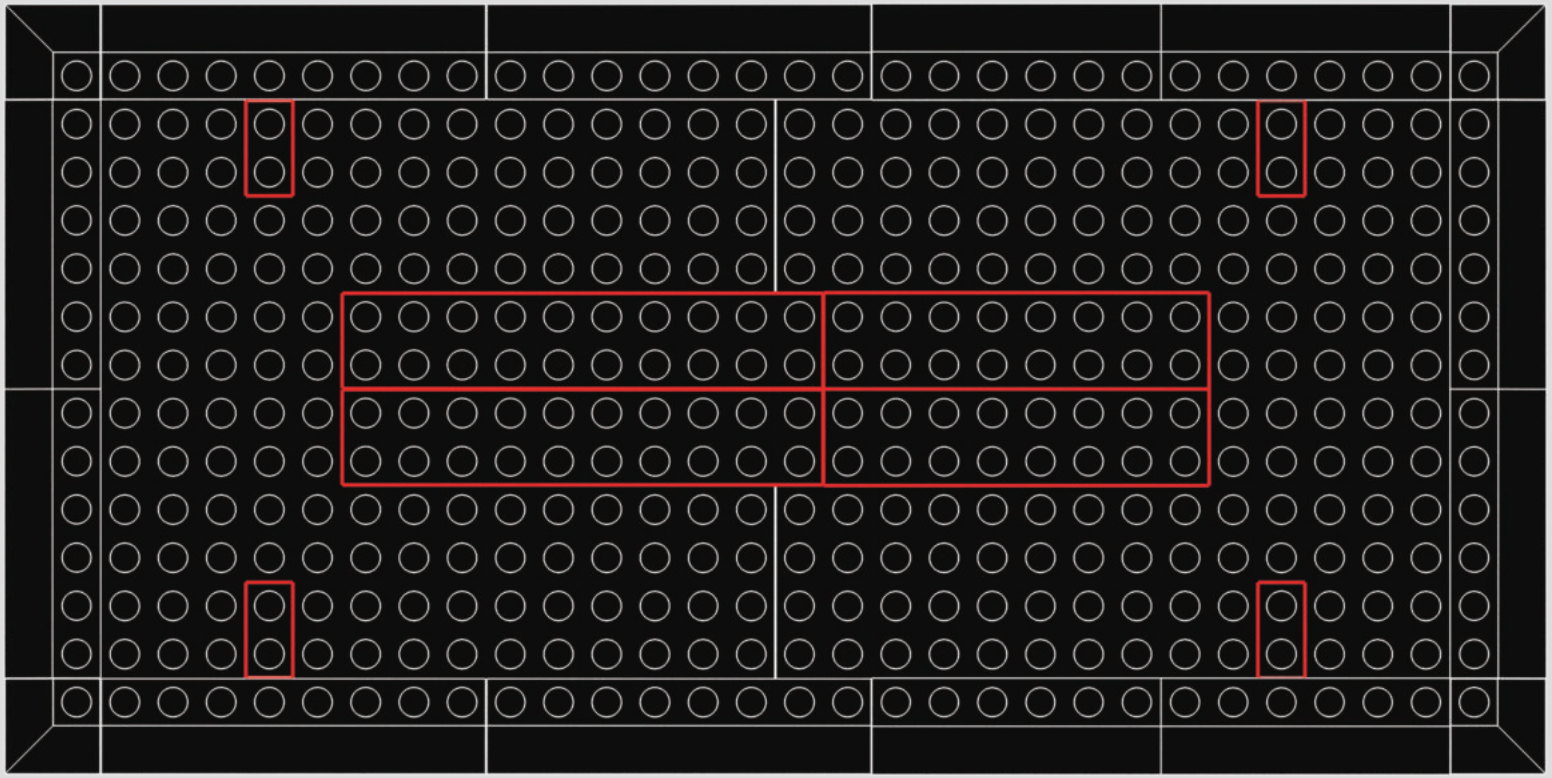

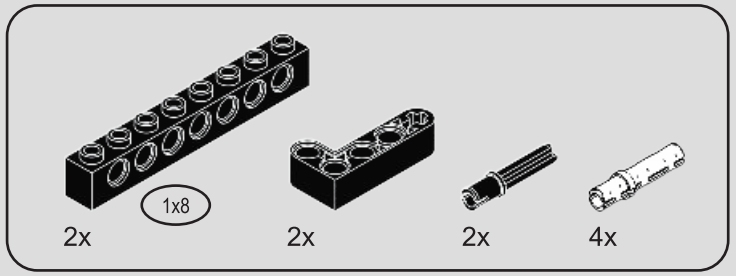

276

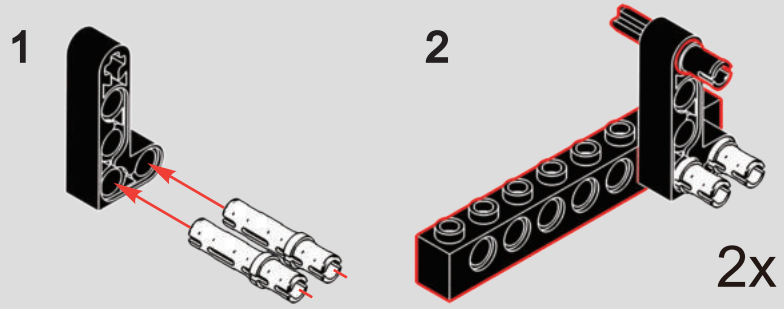

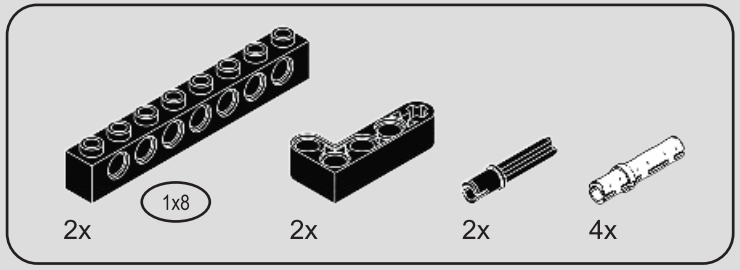

277

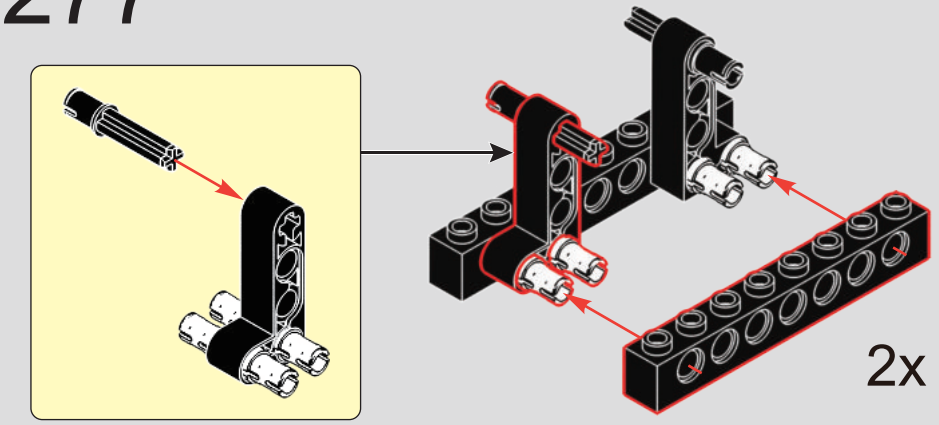

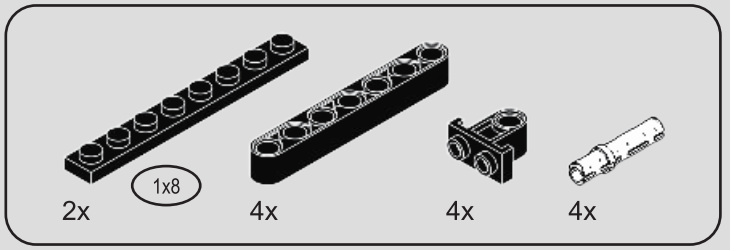

278

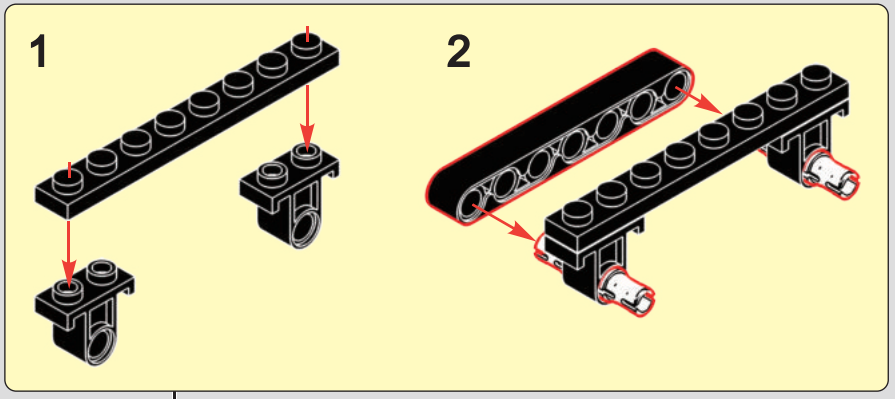

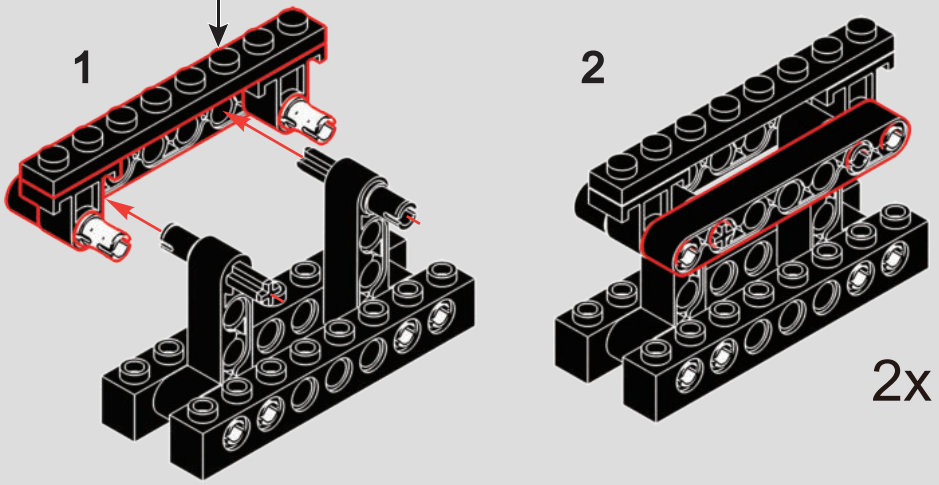

279

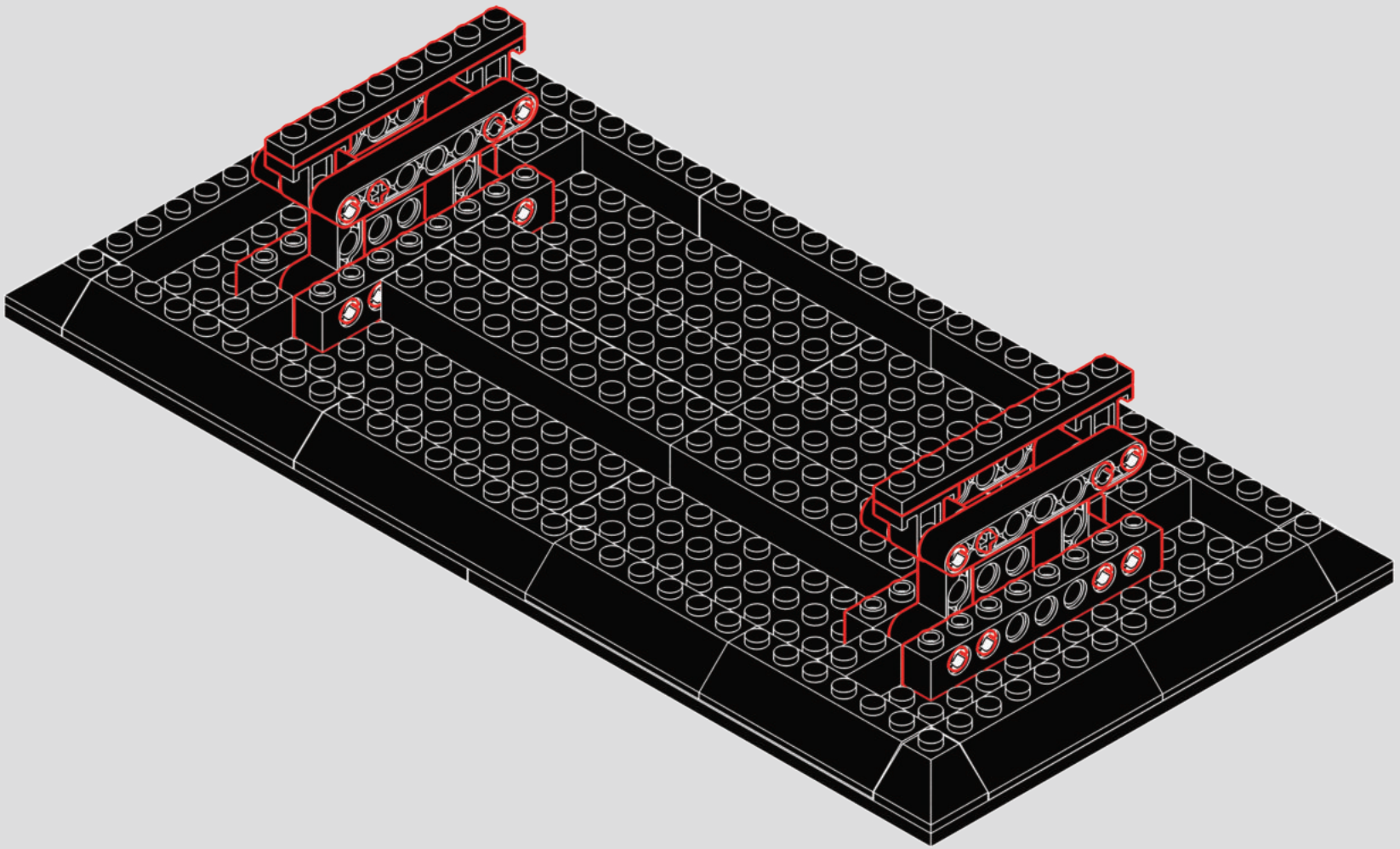

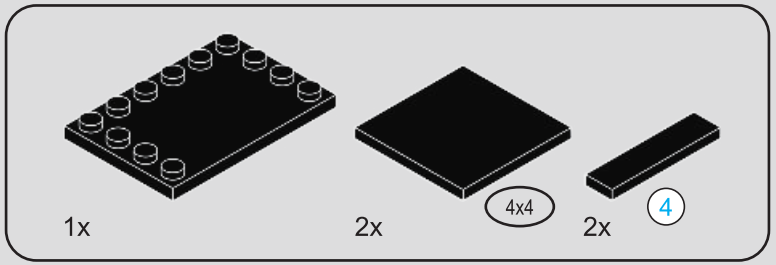



280

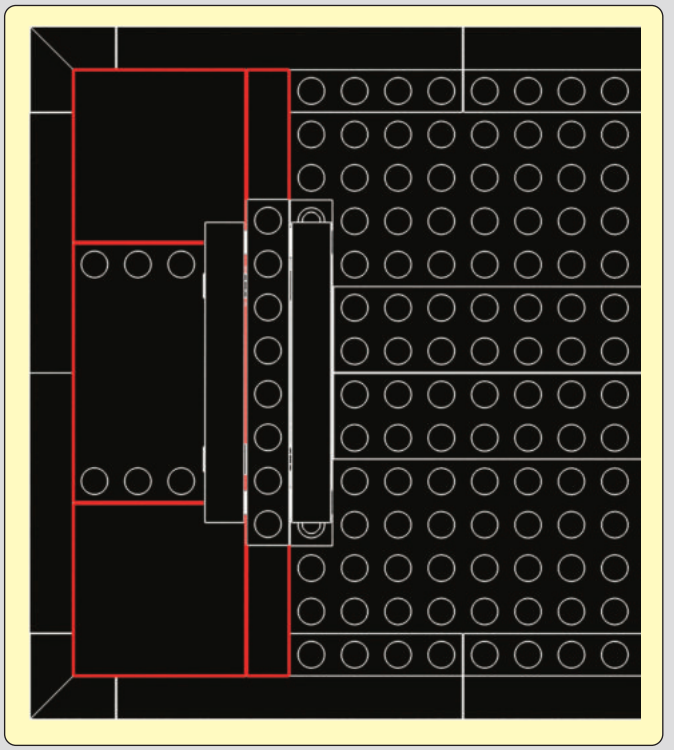

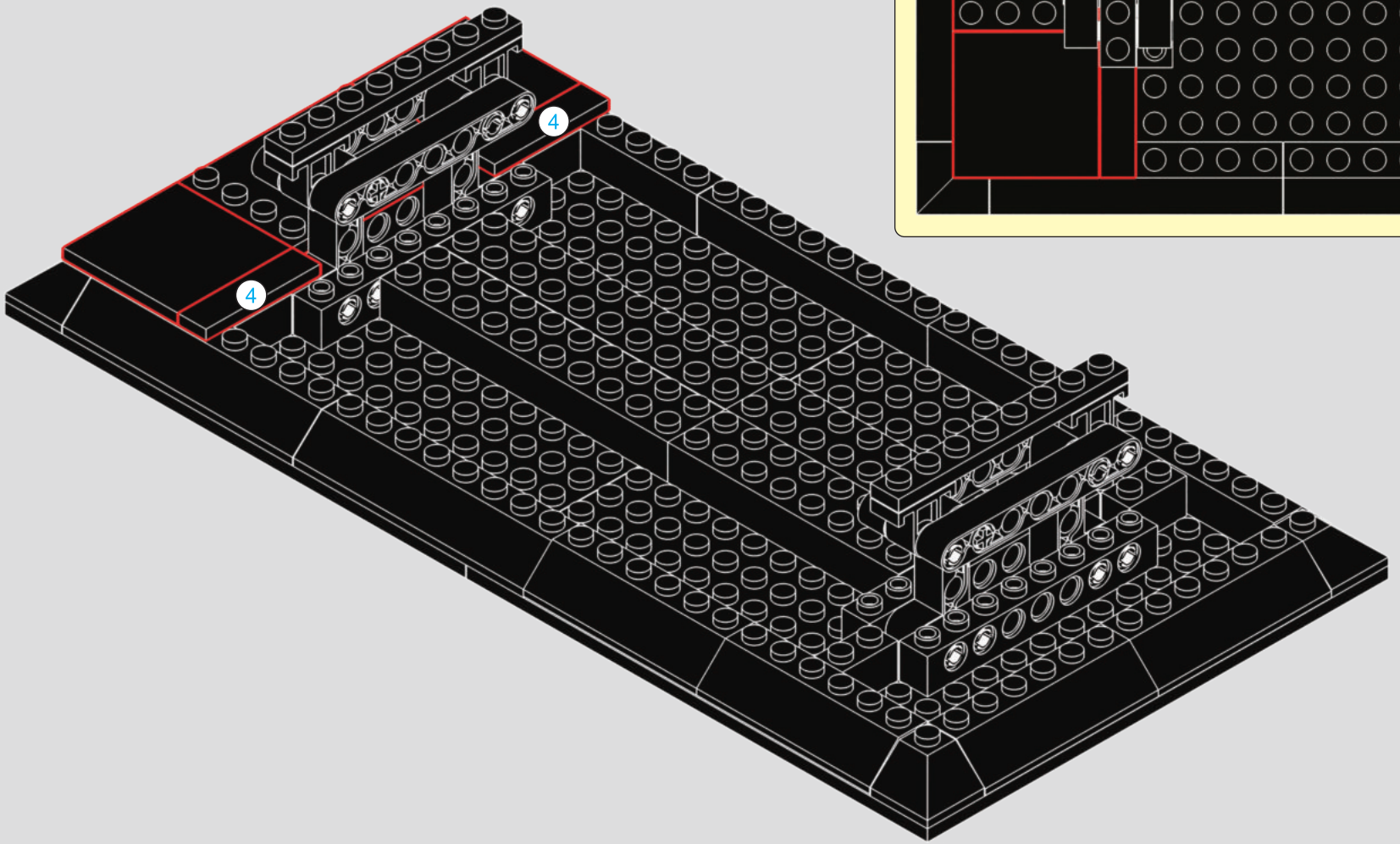

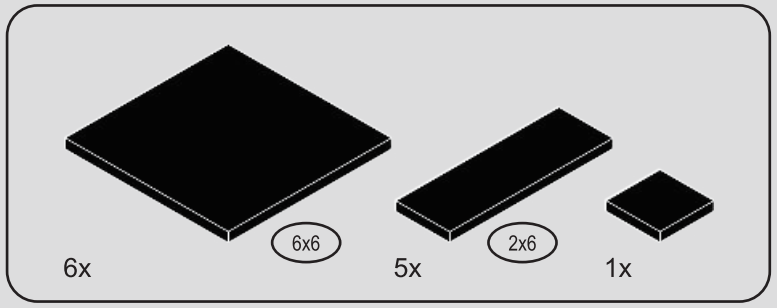

281

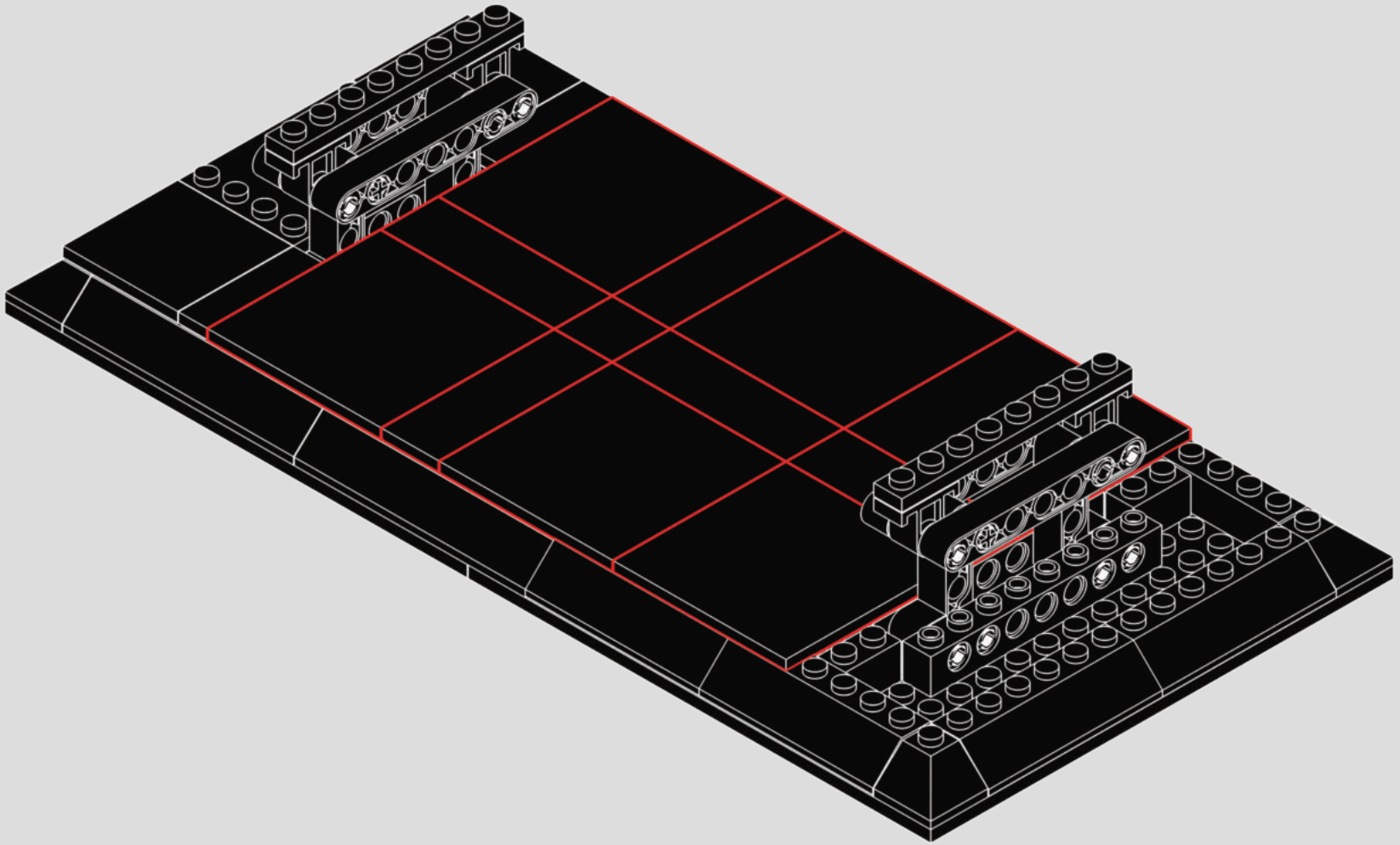

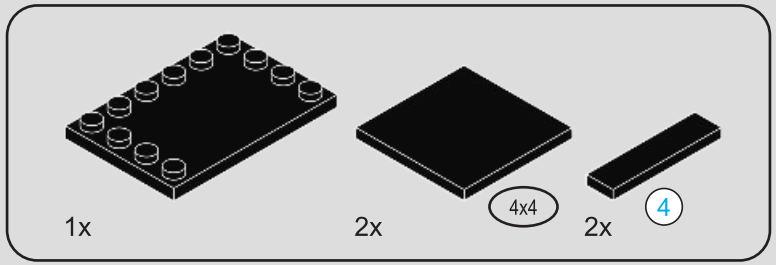



282

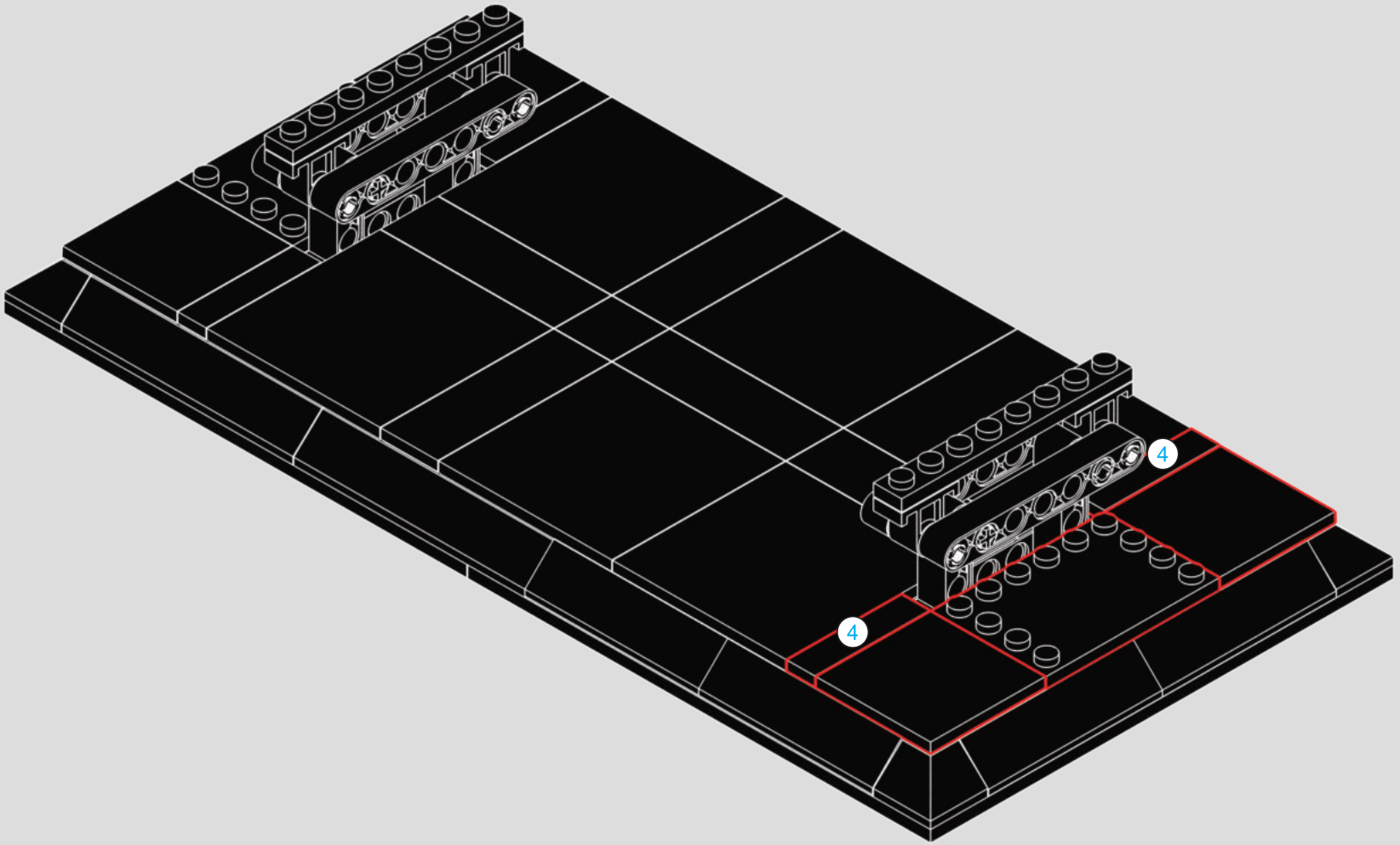

283

1

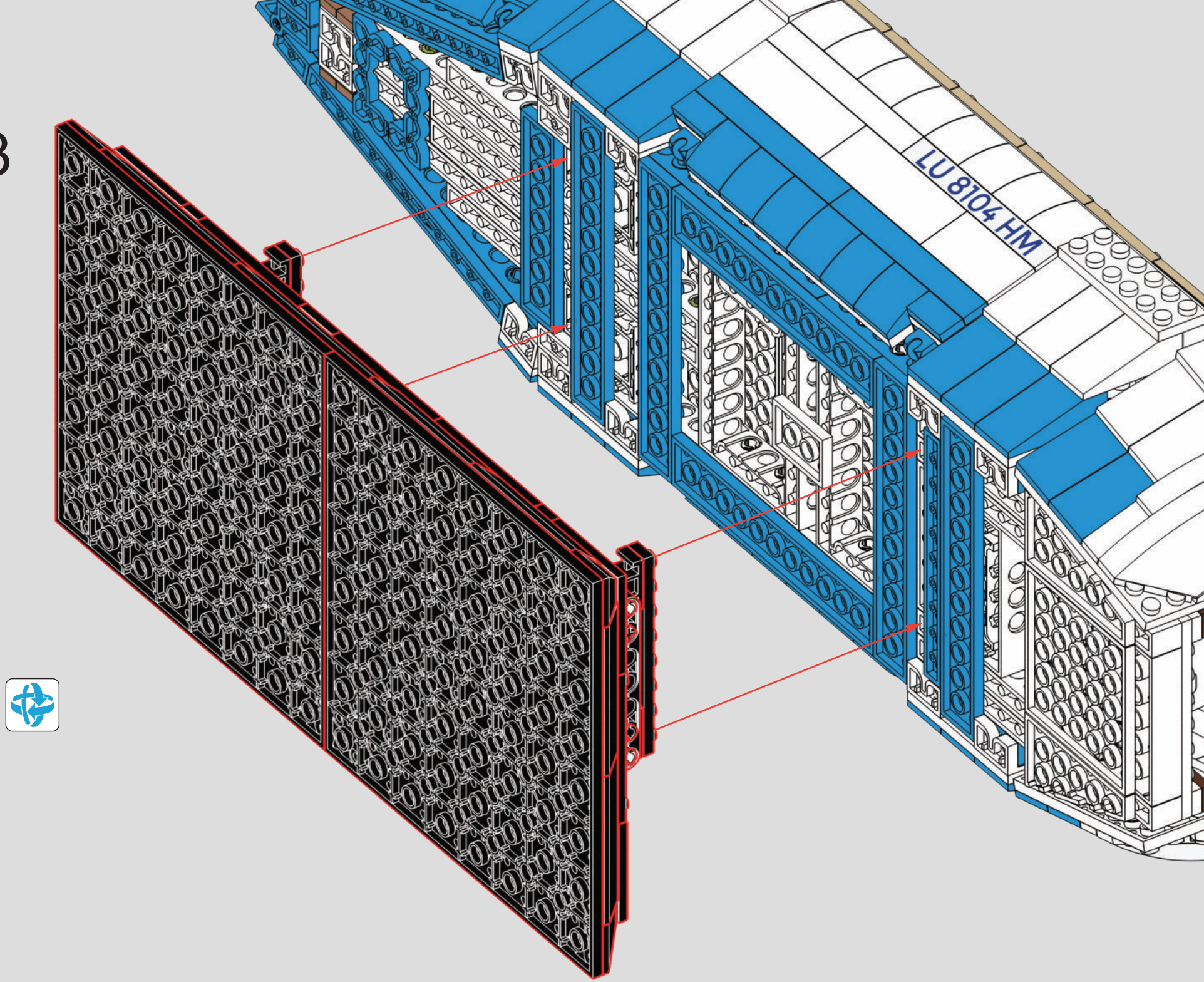

2

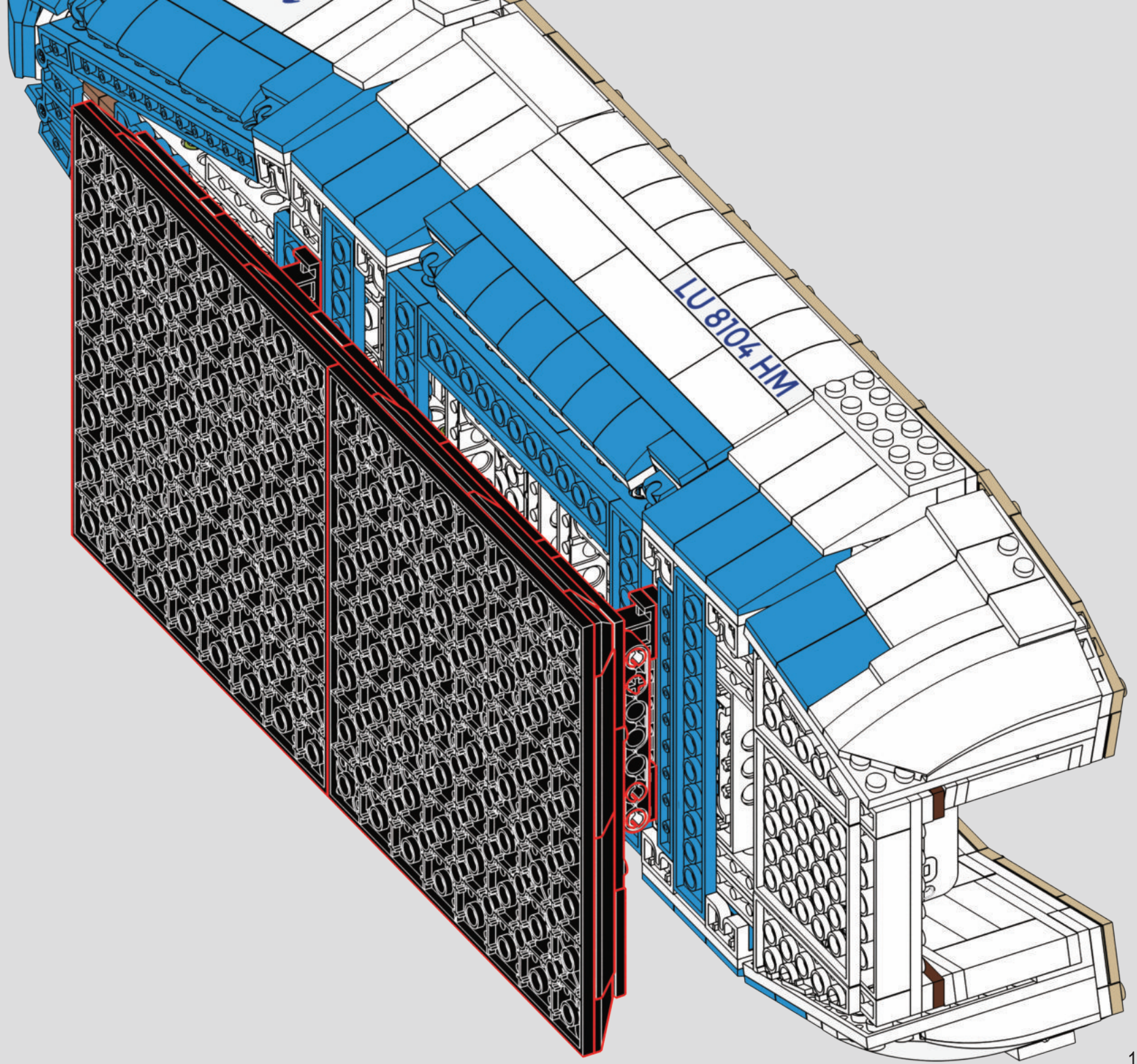

3

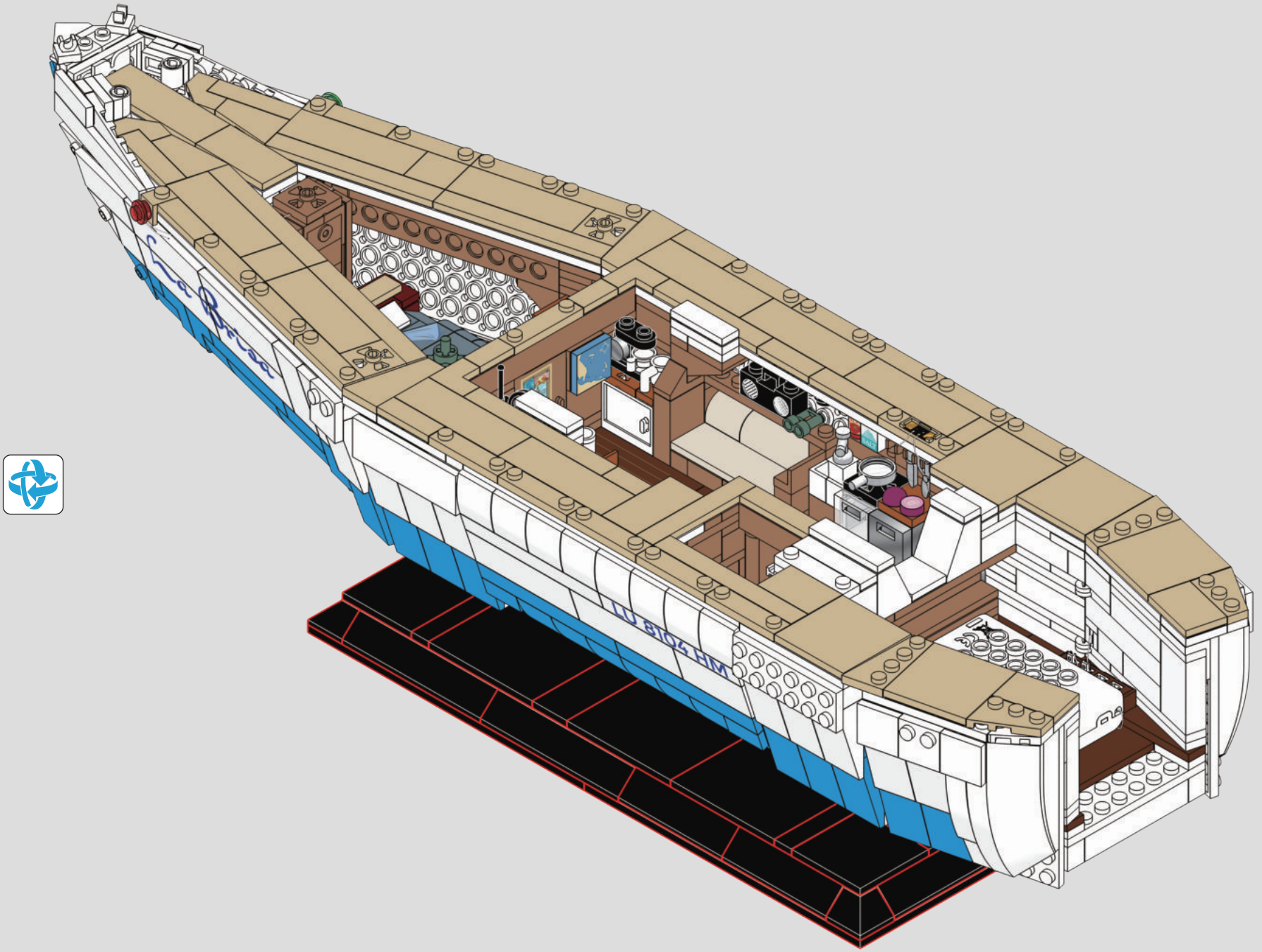

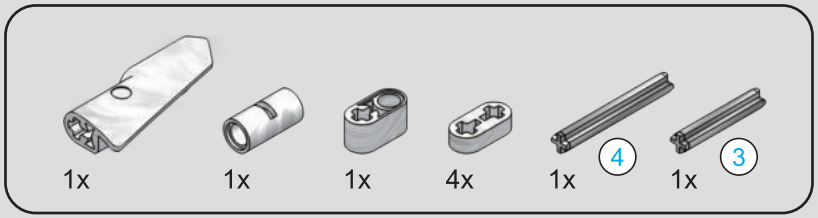

284

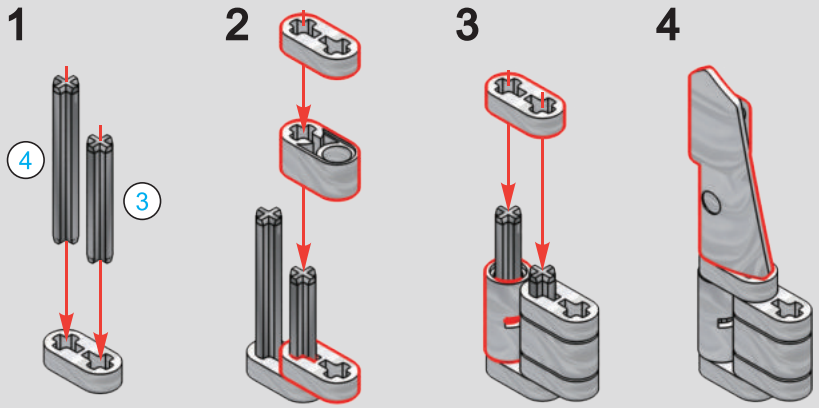



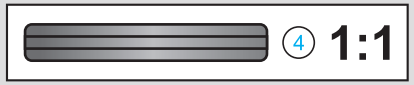

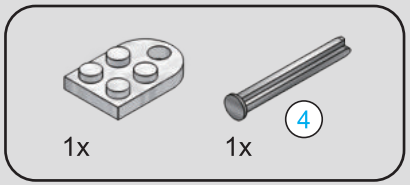

285

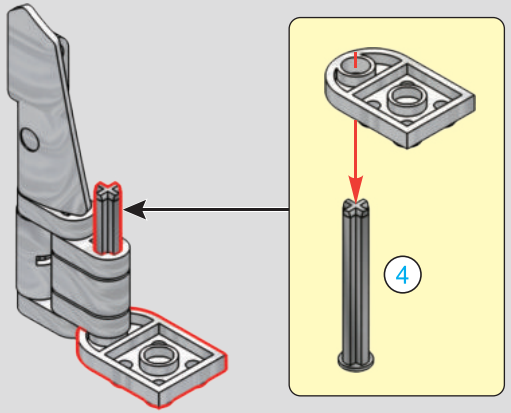



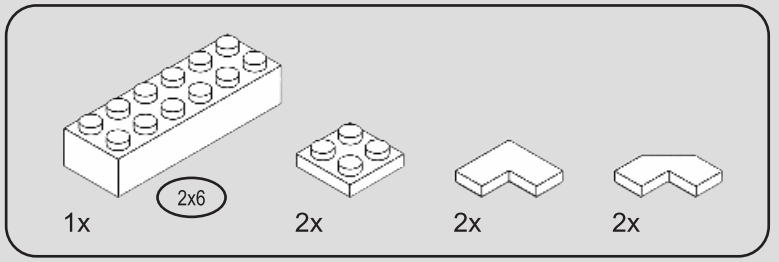

286

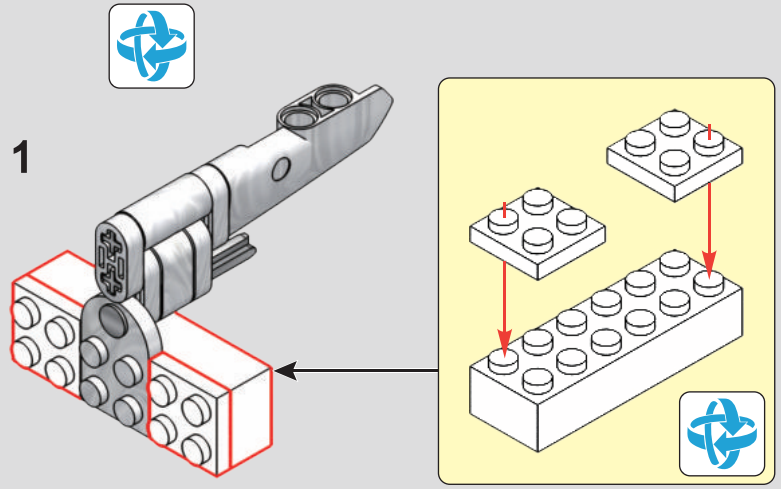

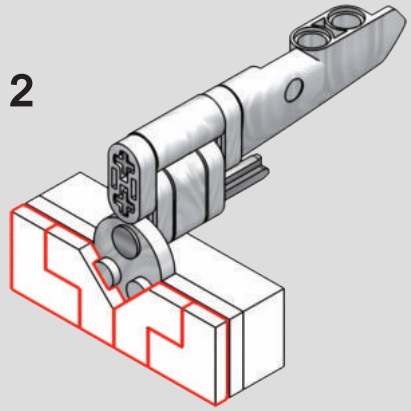

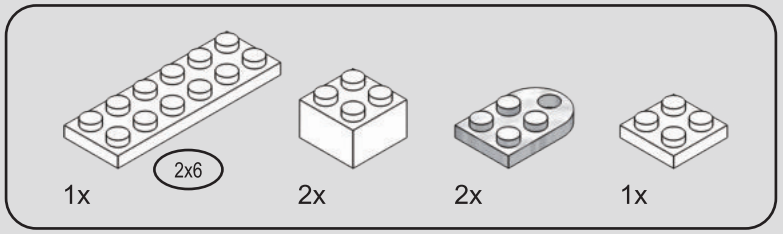

287

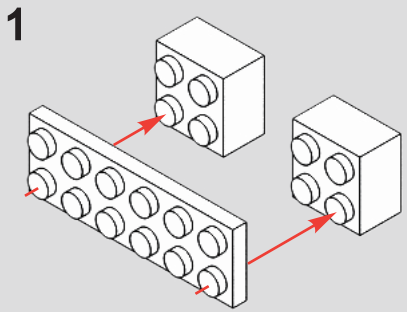

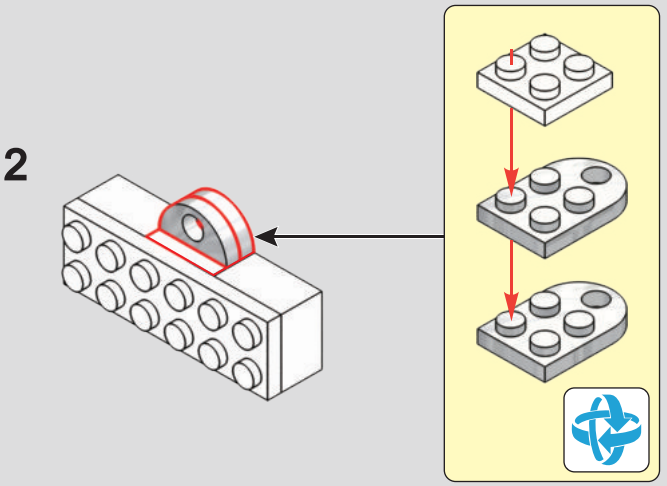

288

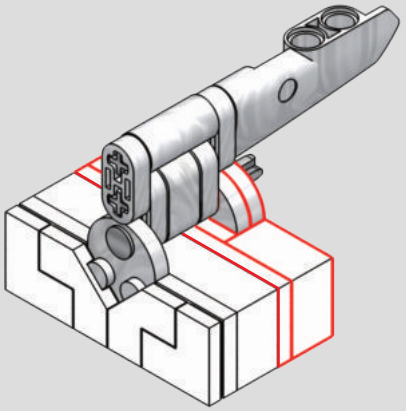



289

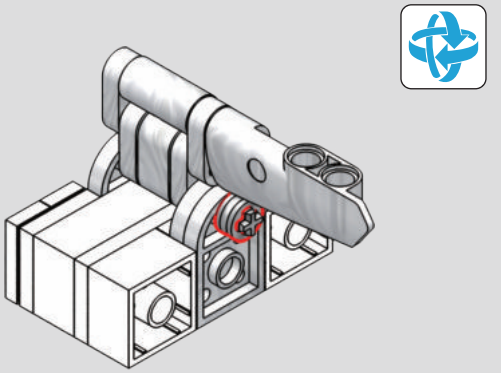

290

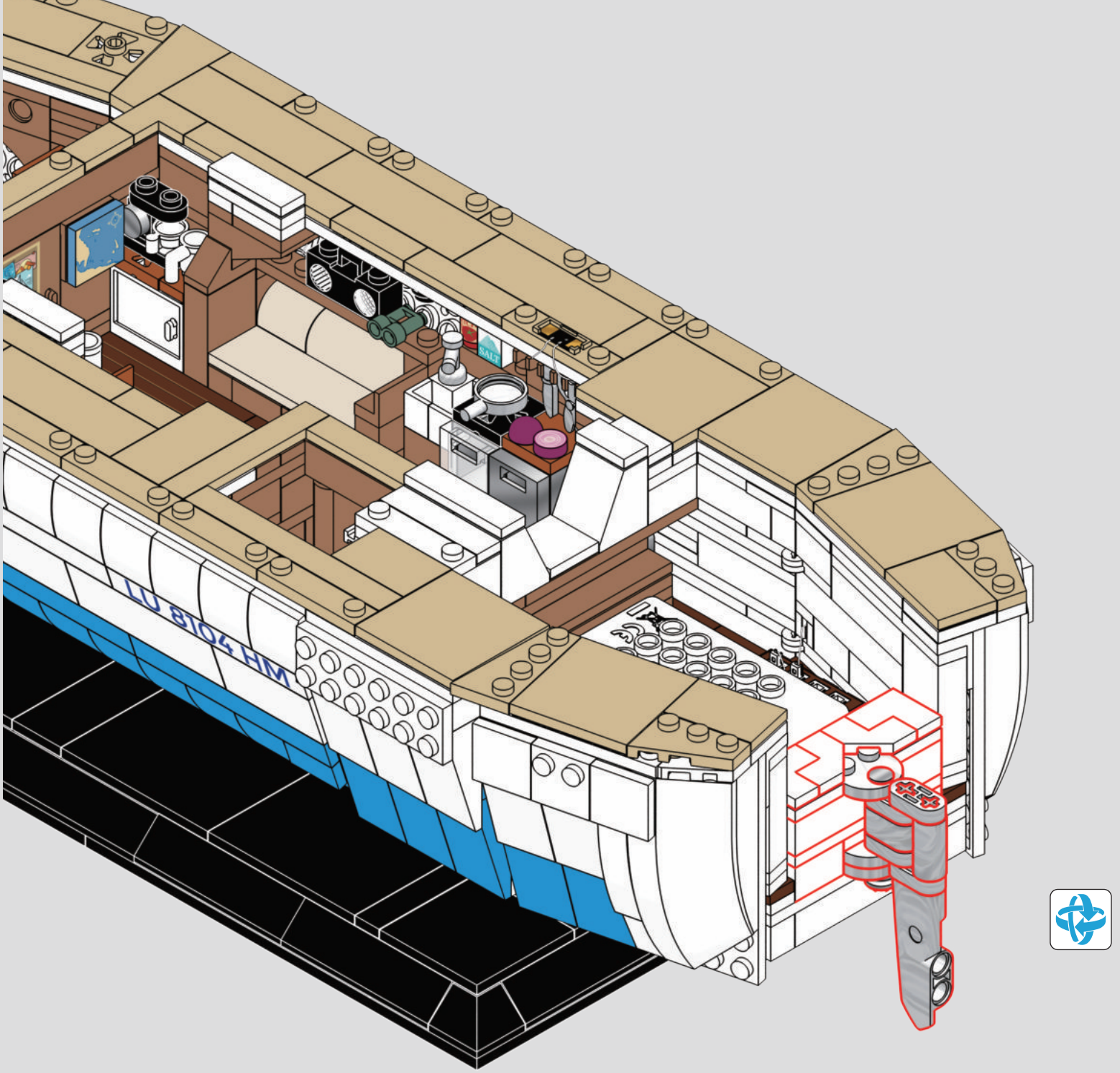

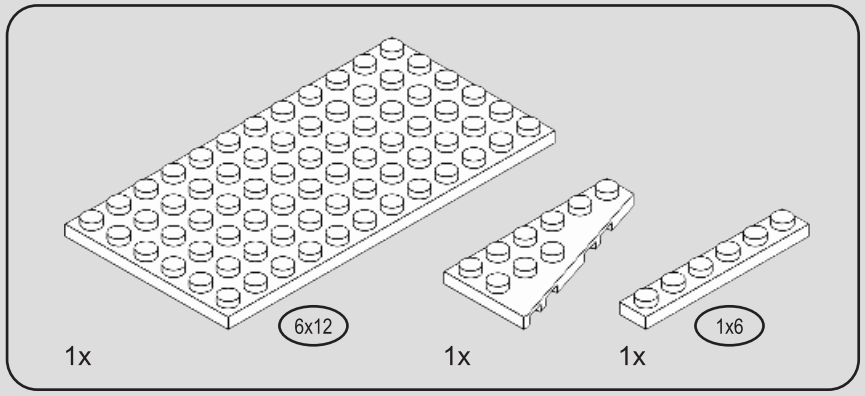

291

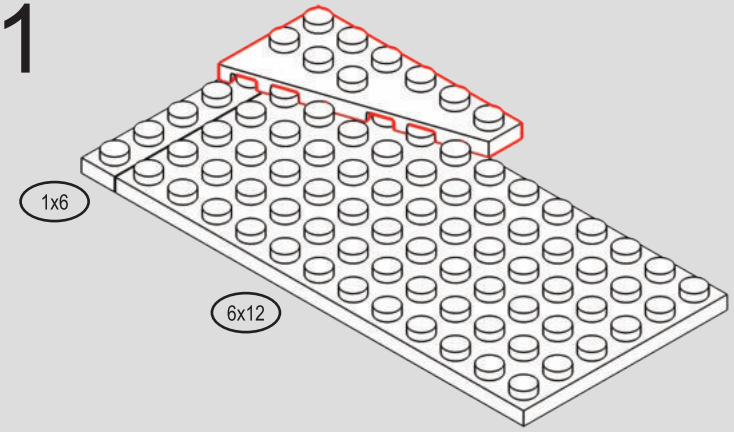

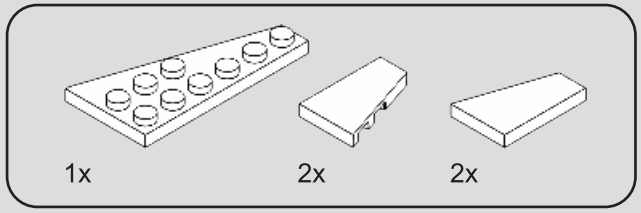

292

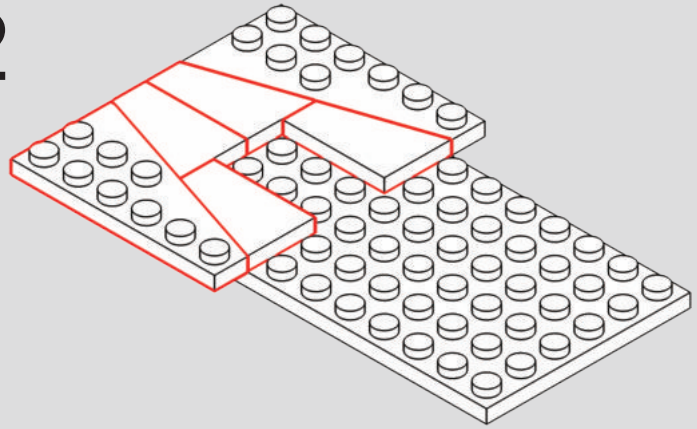

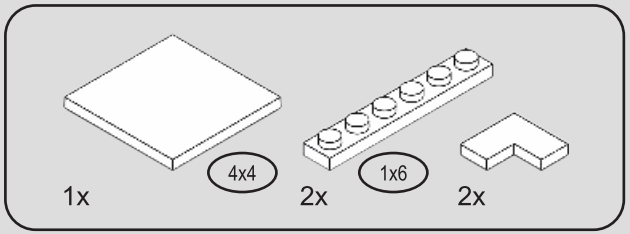

293

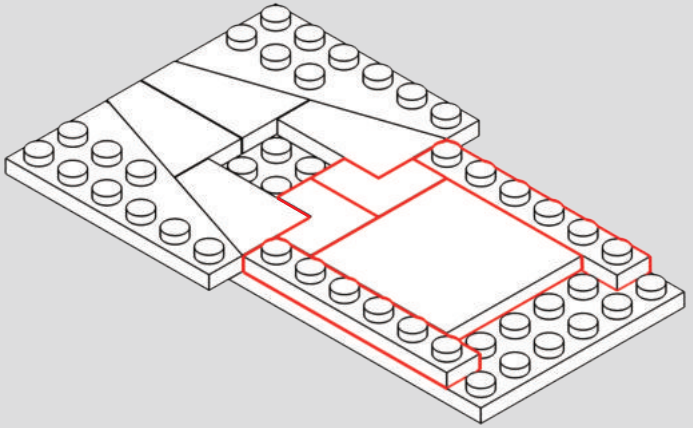

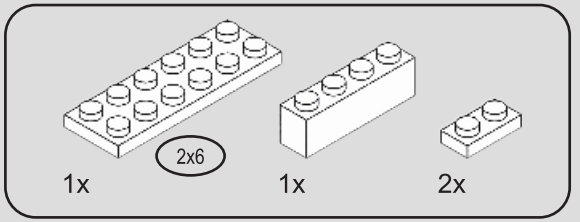

294

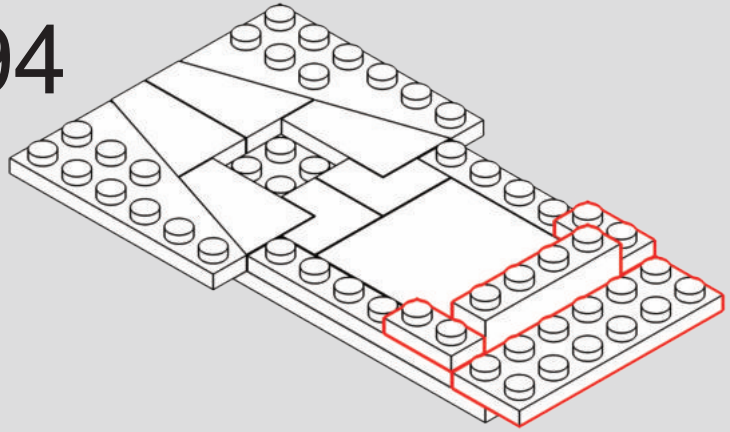

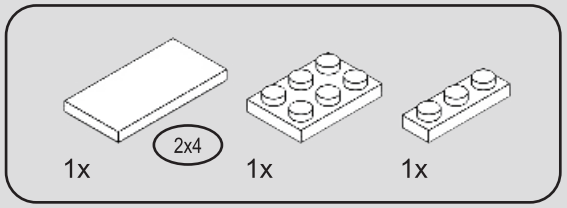

295

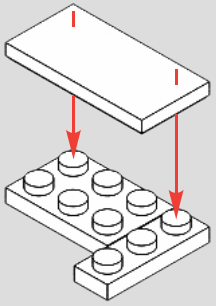

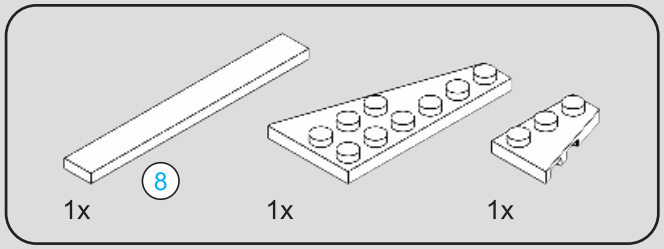

296

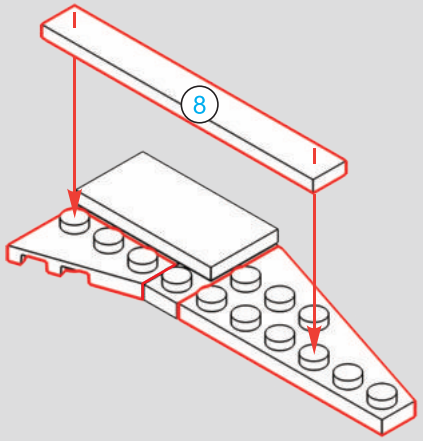

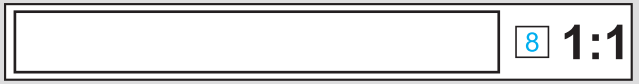

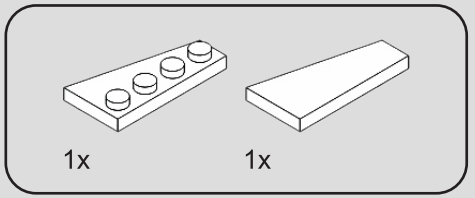

297

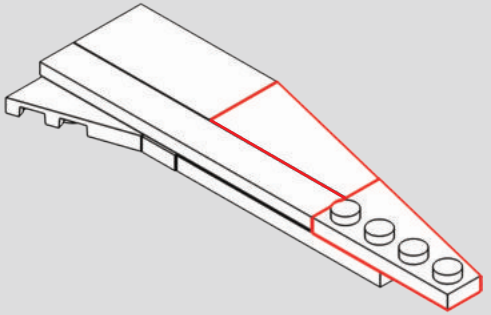

298

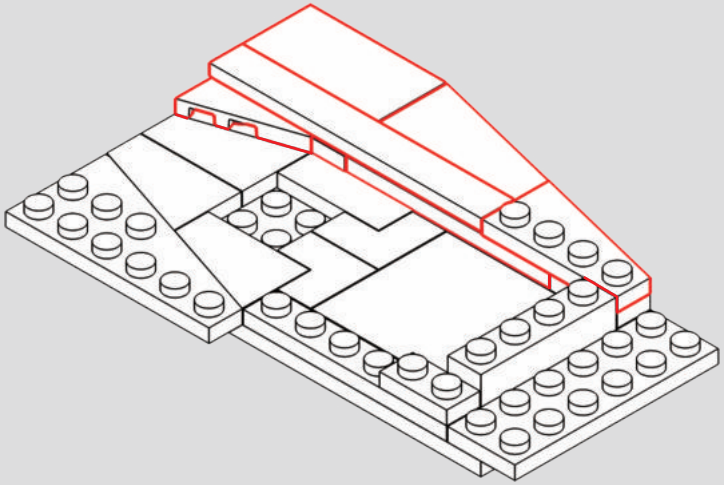

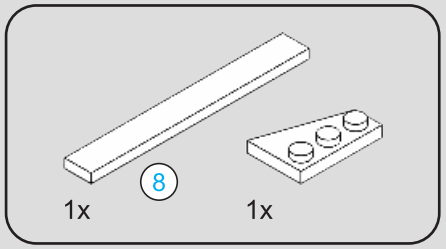

299

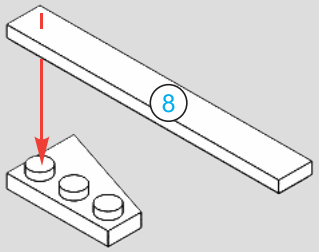



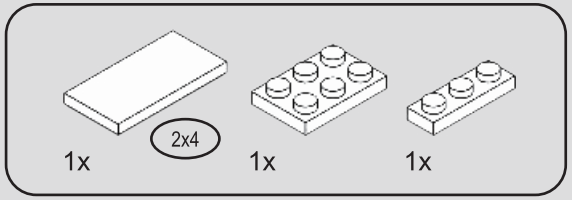

300

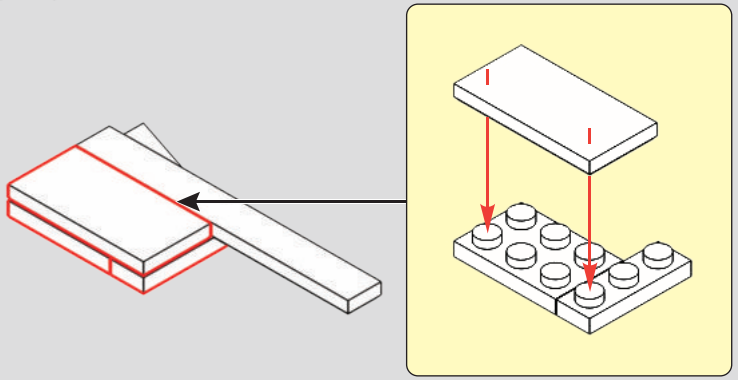

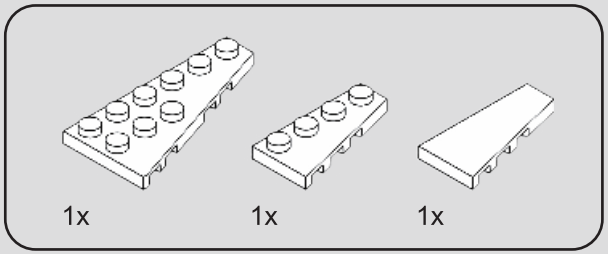

301

1

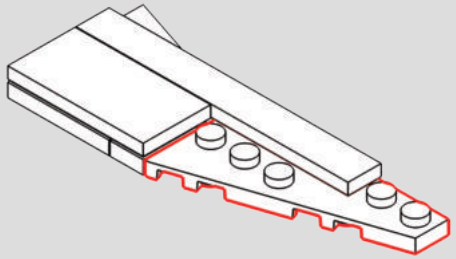

2

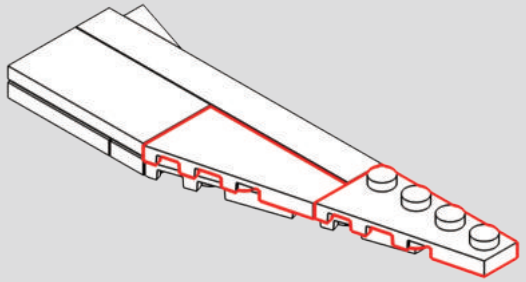

302

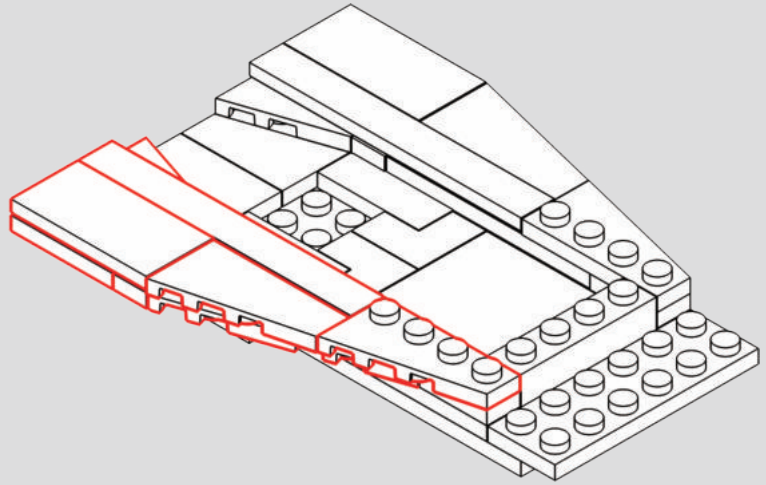

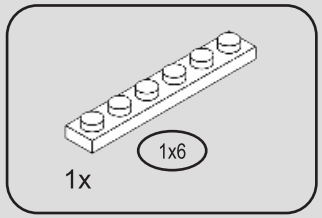

303

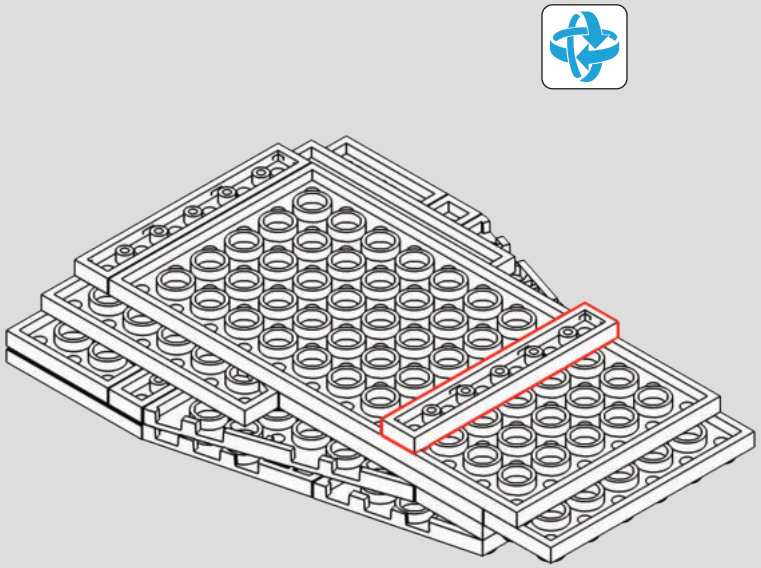

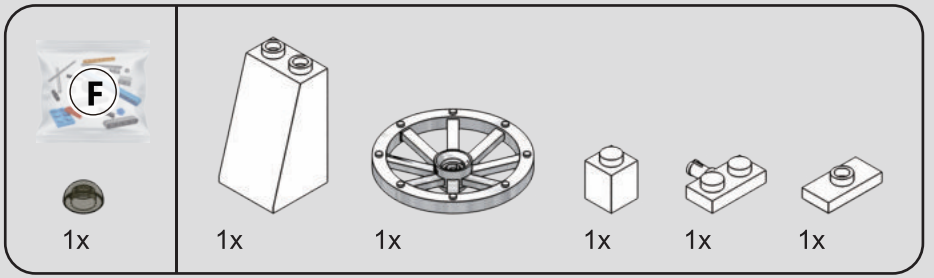

304

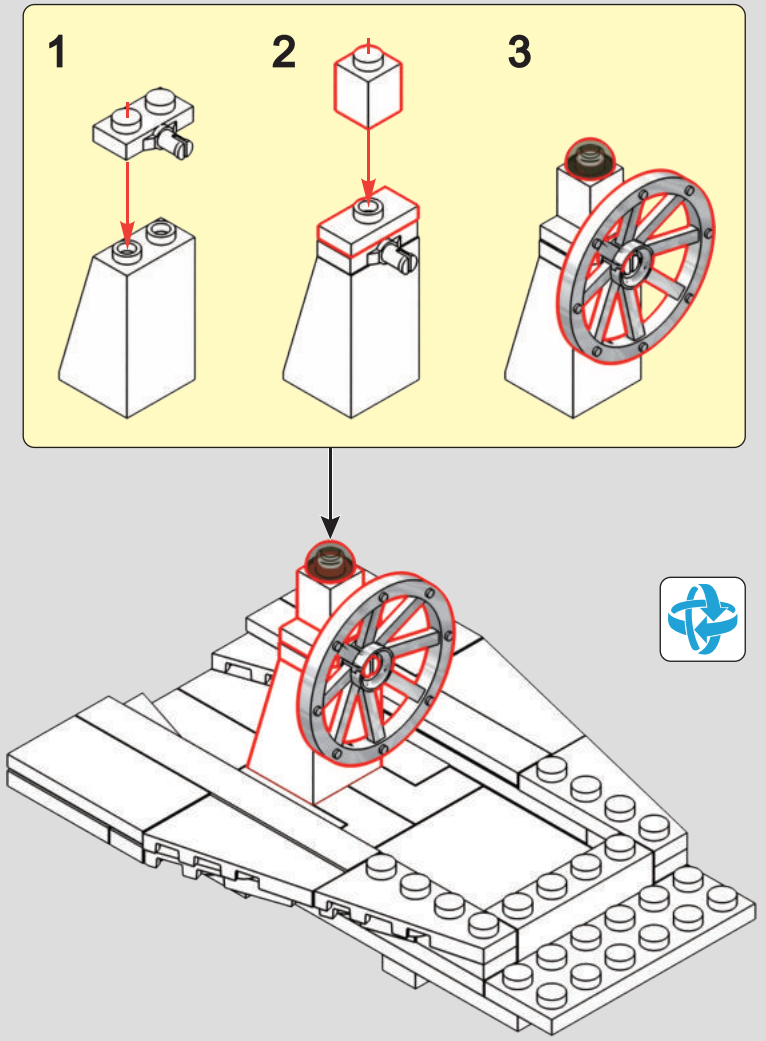

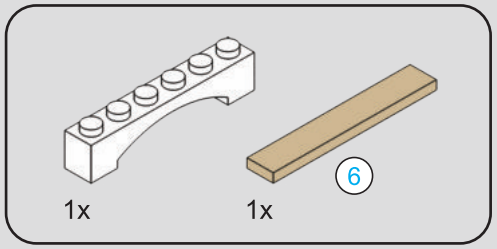

305

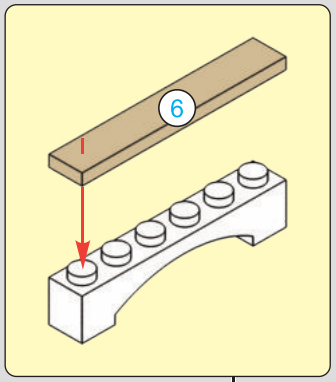

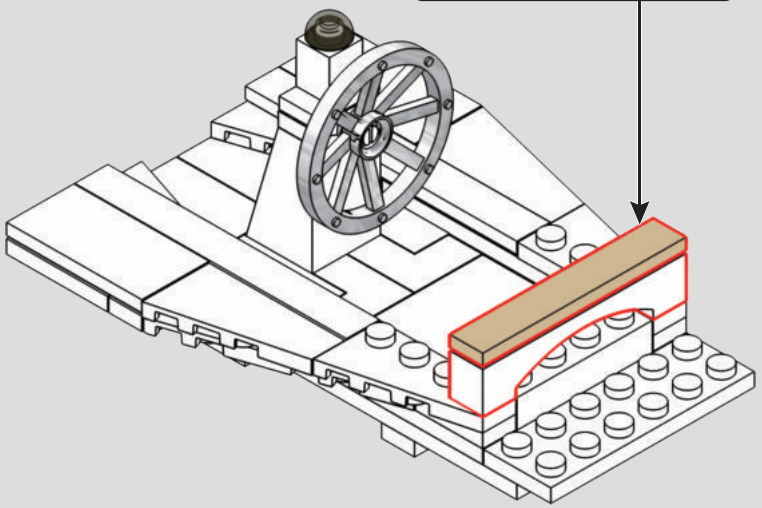



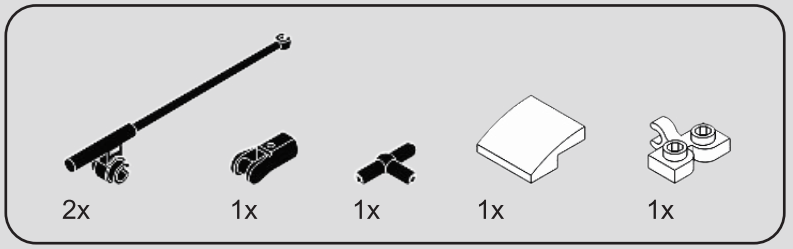

306

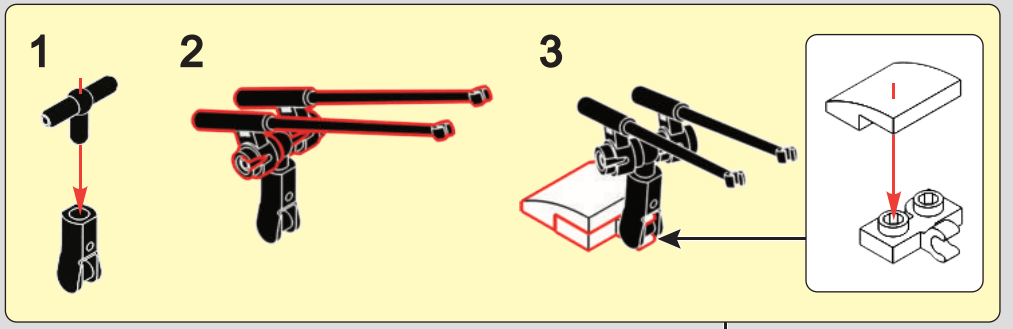

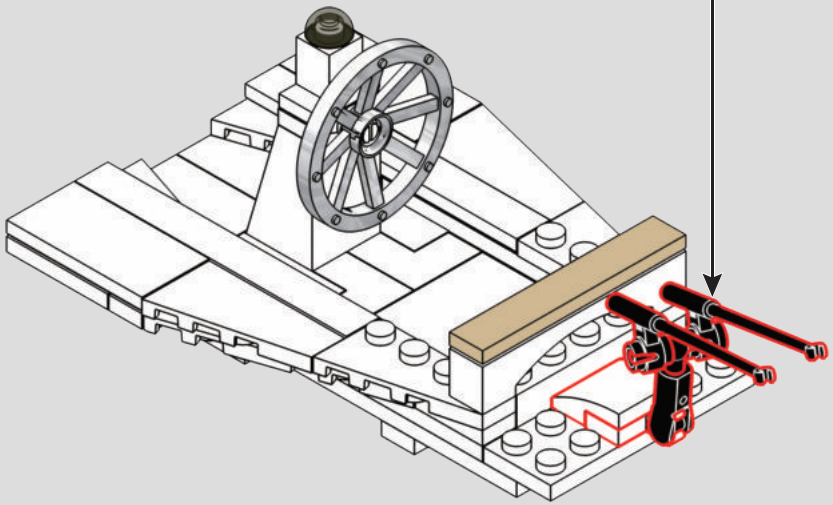

307

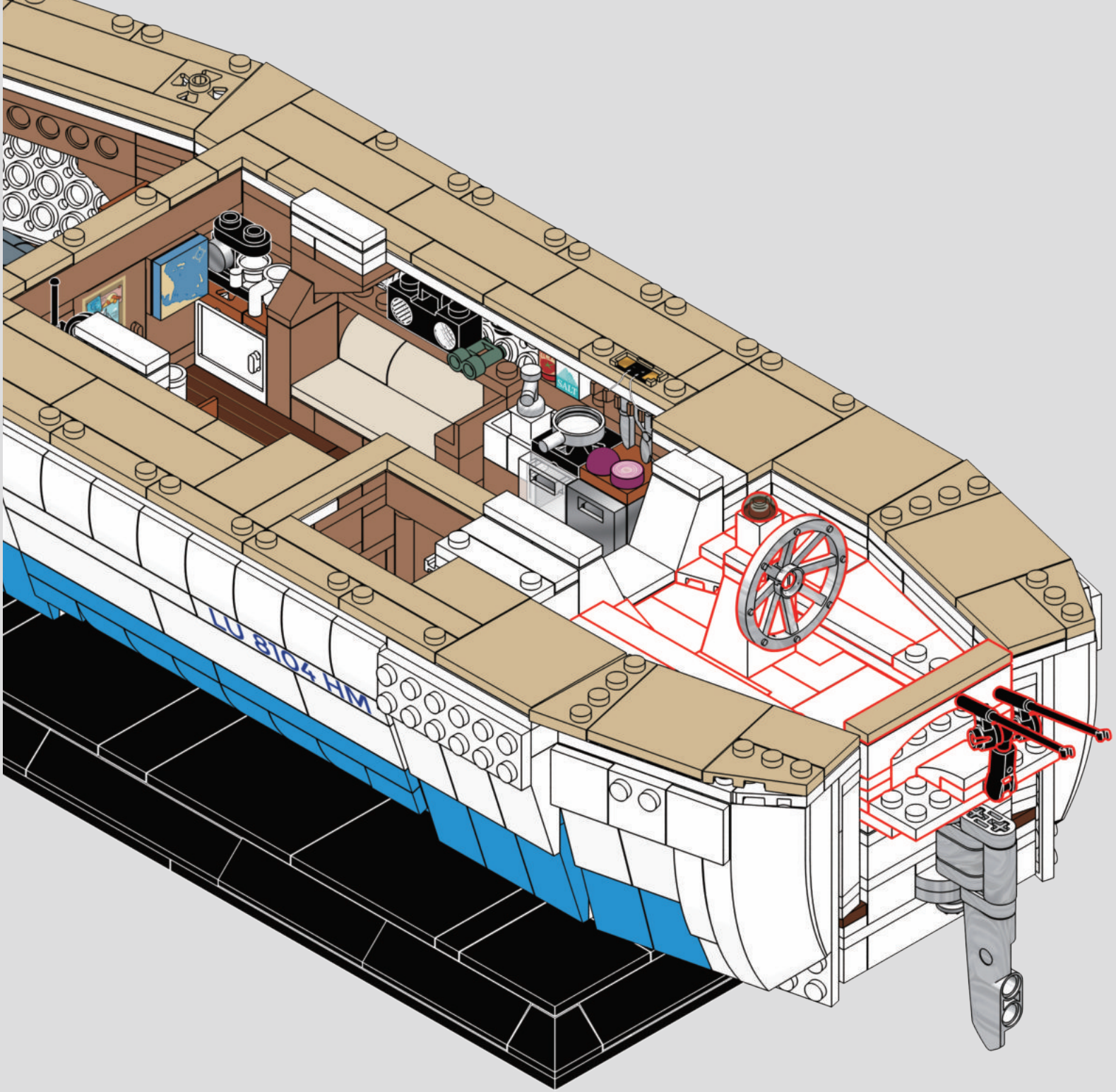


7
F
F.O
2
DELIGHT DAY AND NIGHT

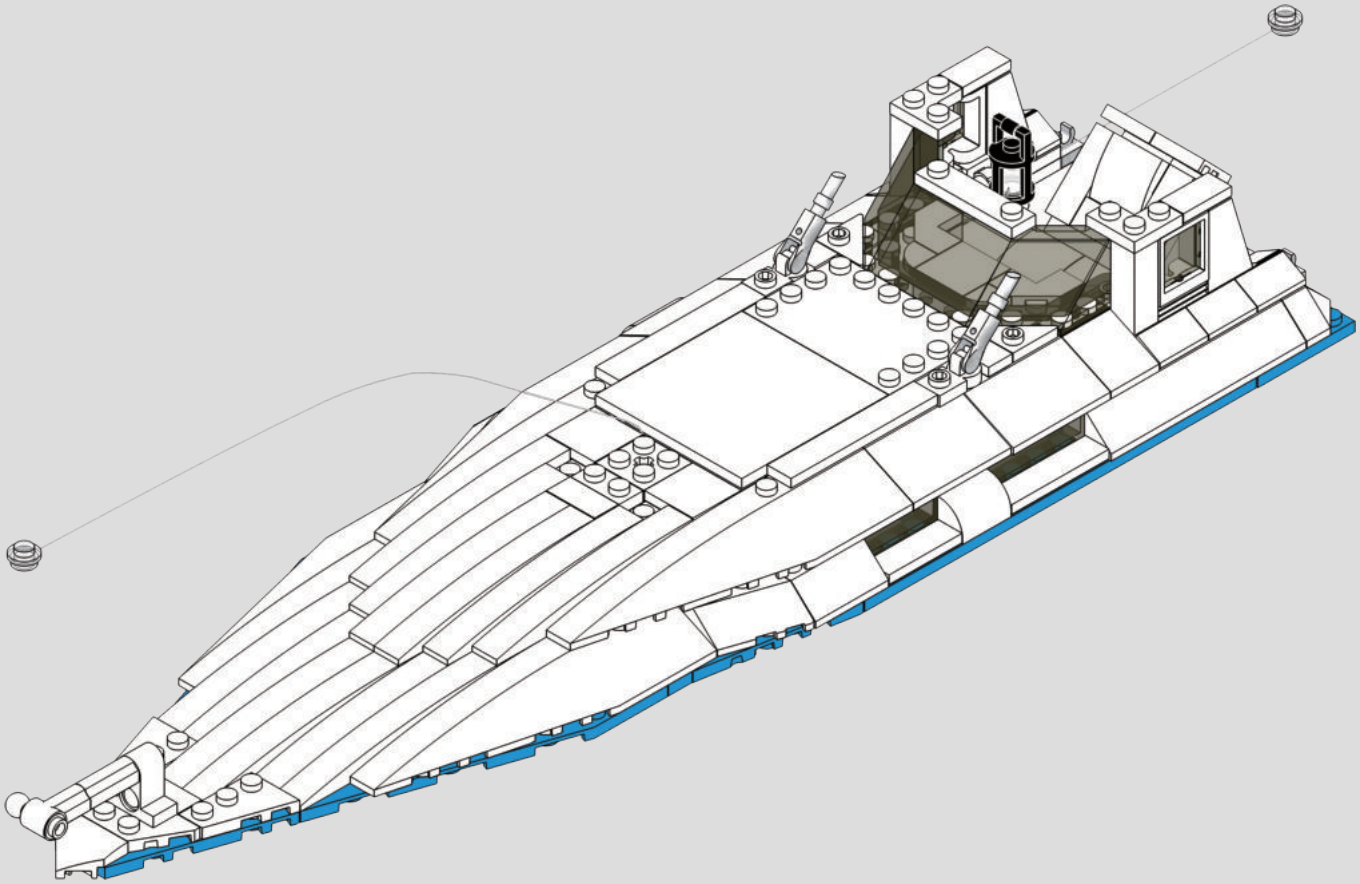

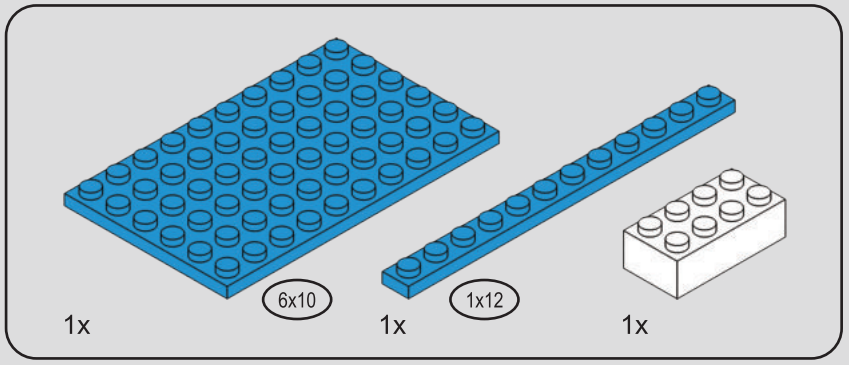

308

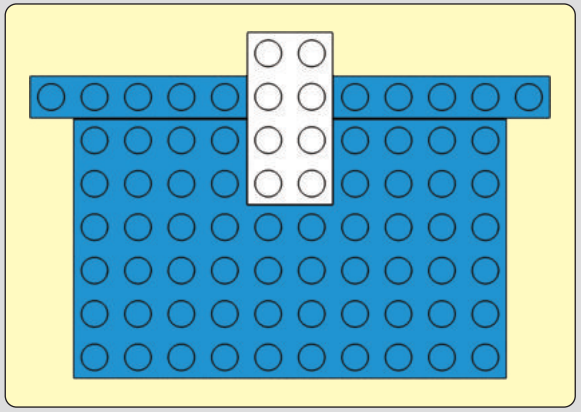

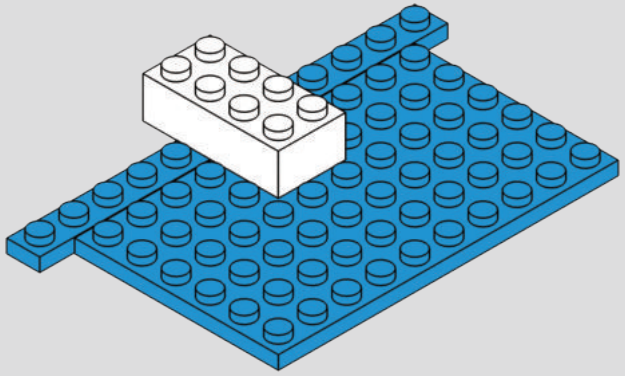

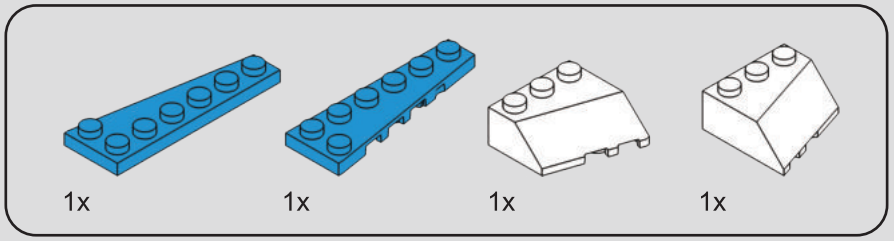

309

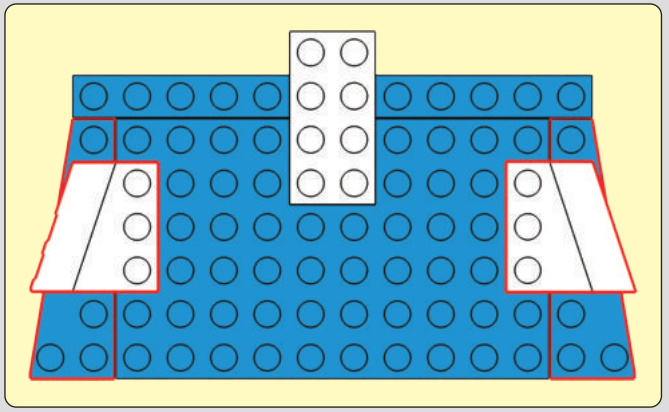

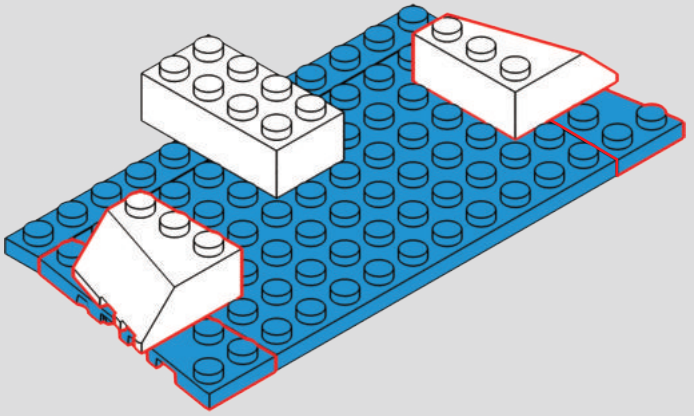

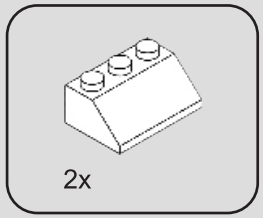

310

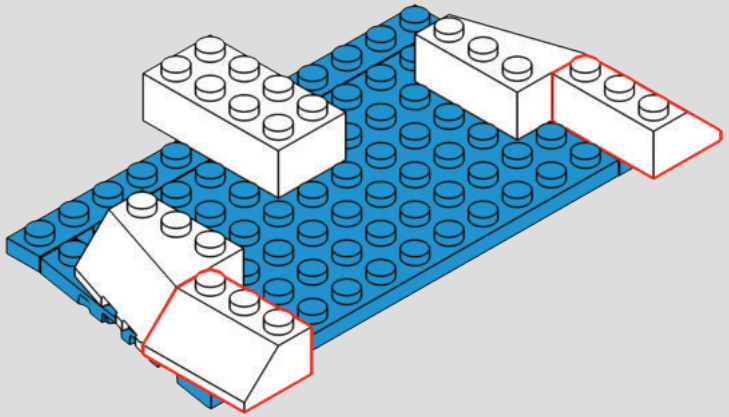

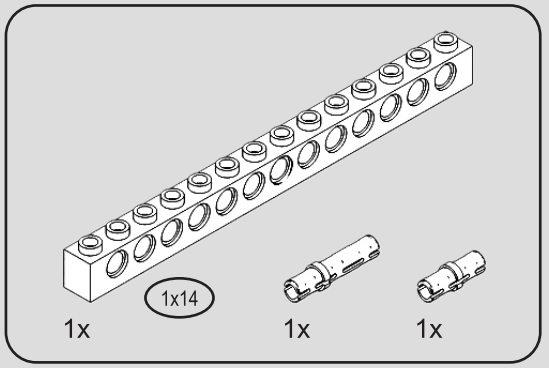

311

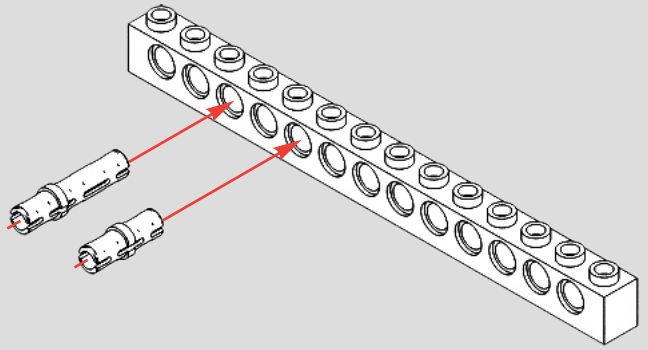

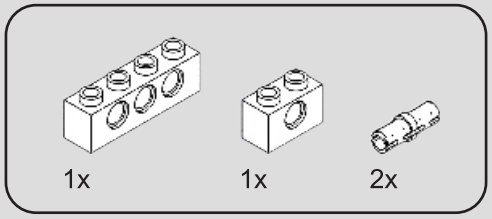

312

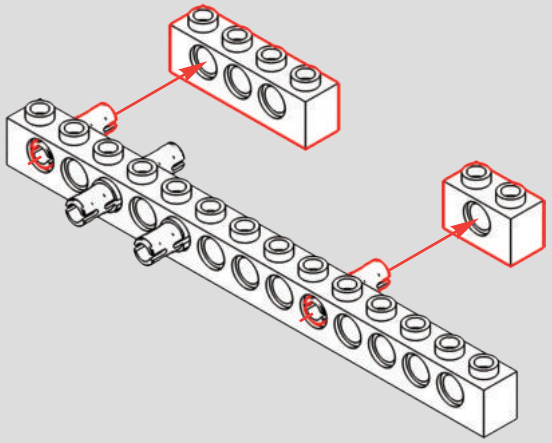

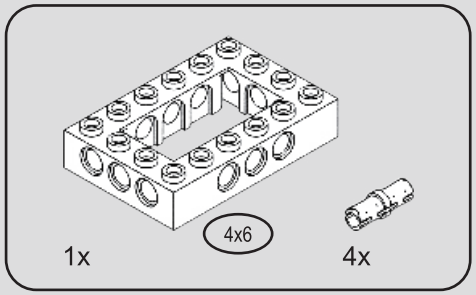

313

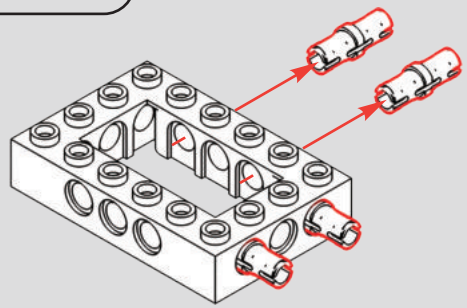

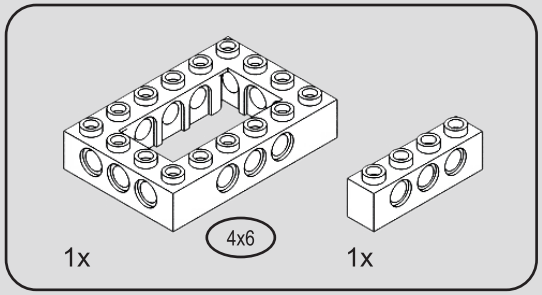

314

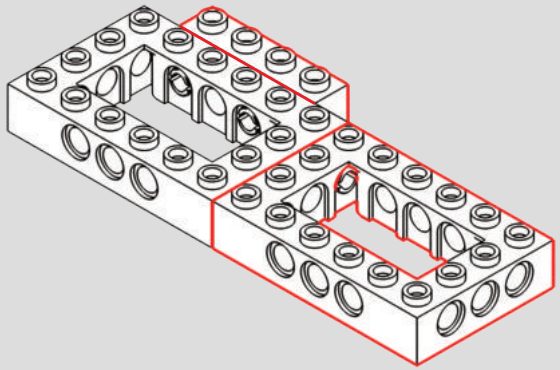

315

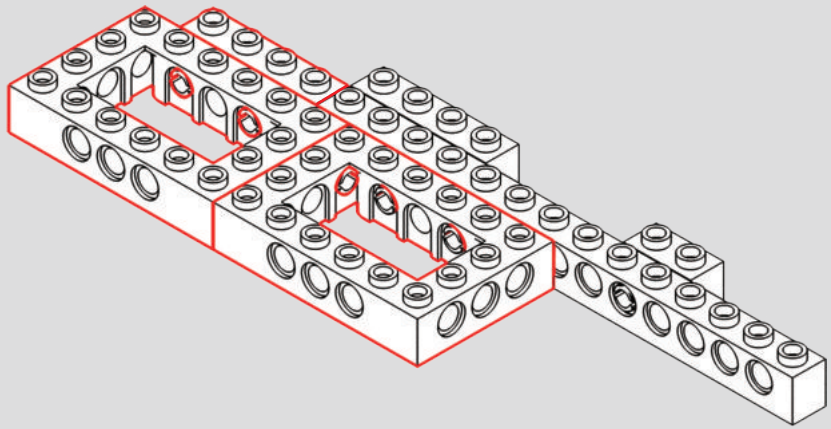

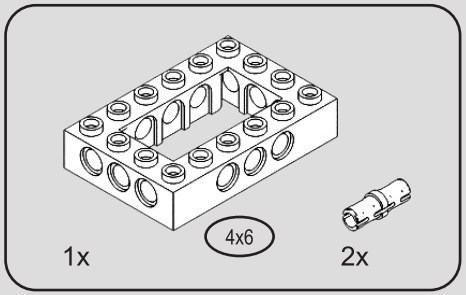

316

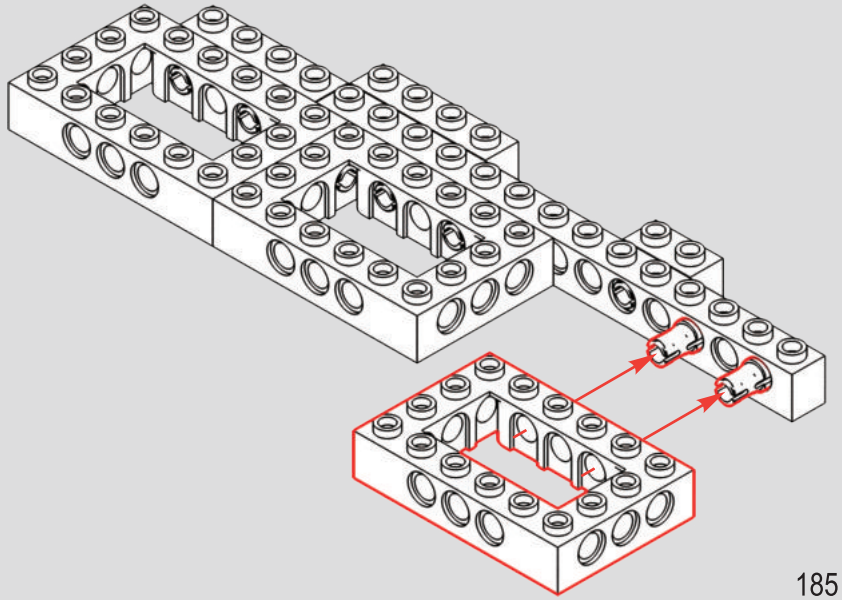

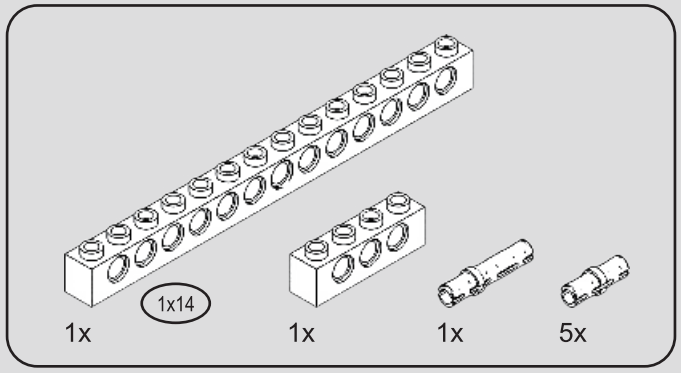

317

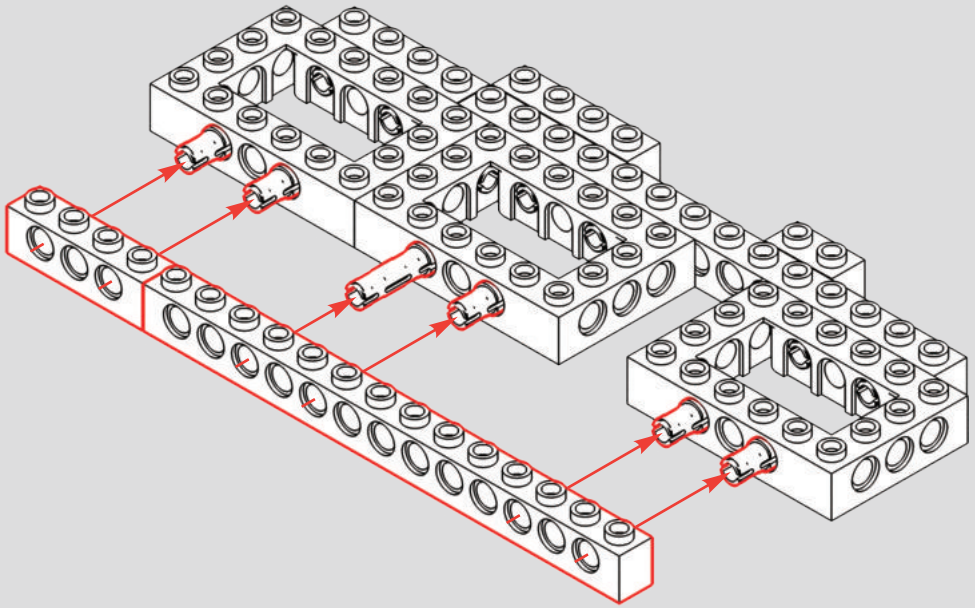

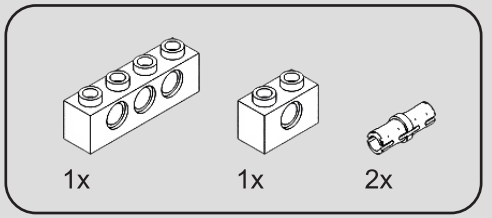

318

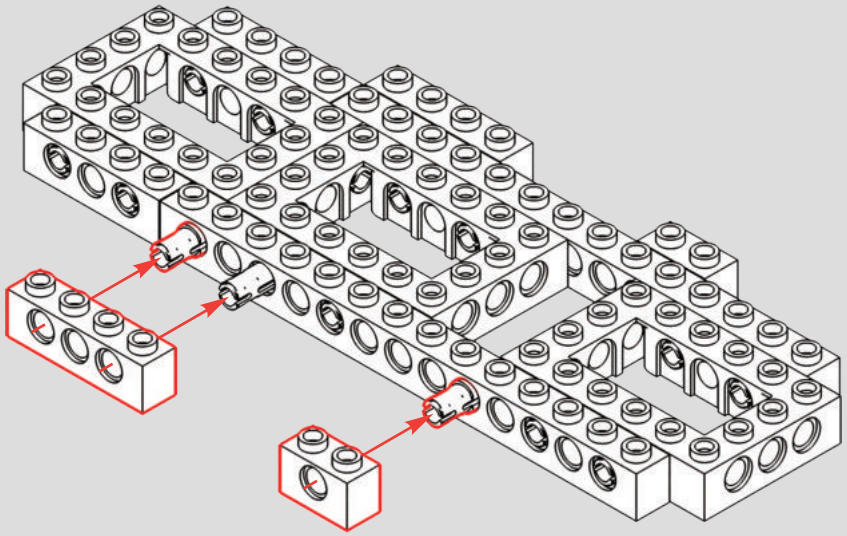

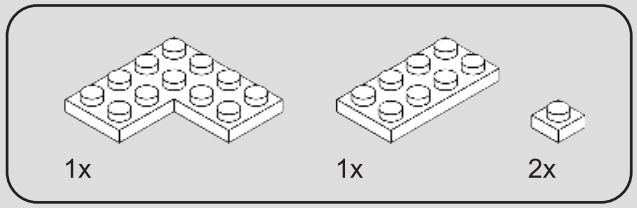

319

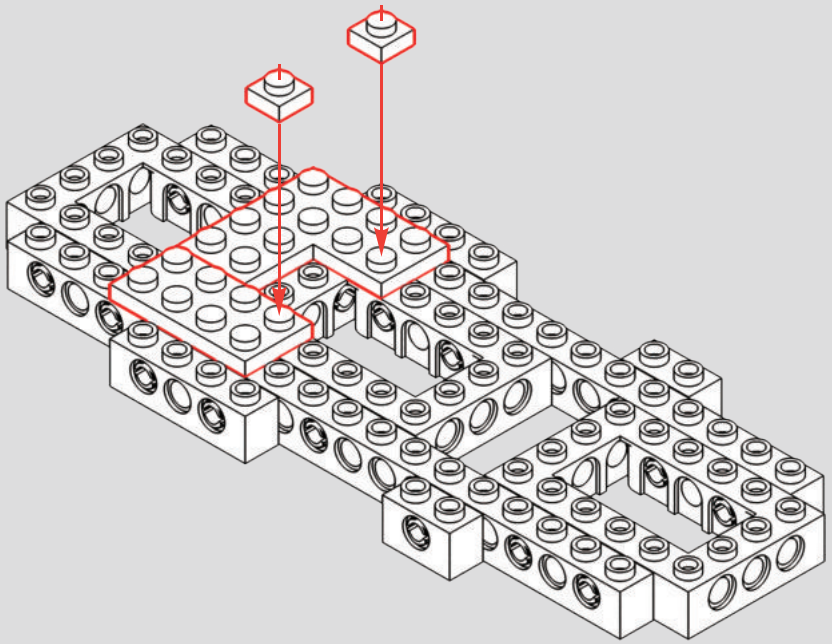

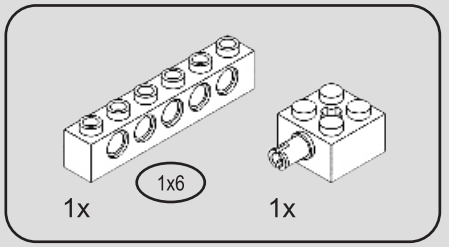

320

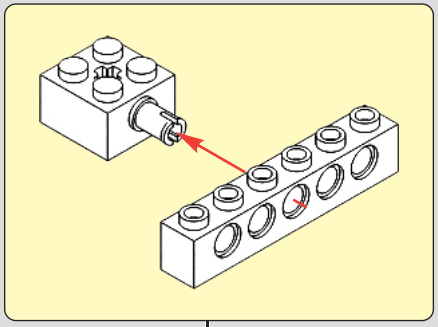

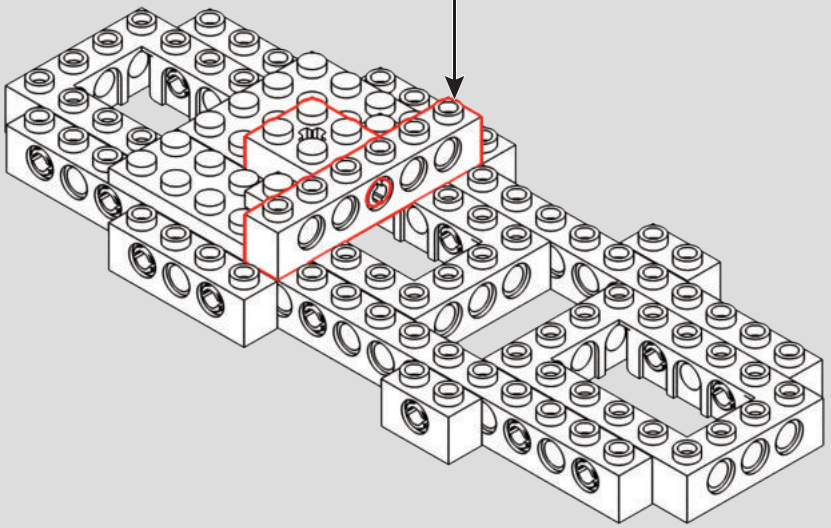

321

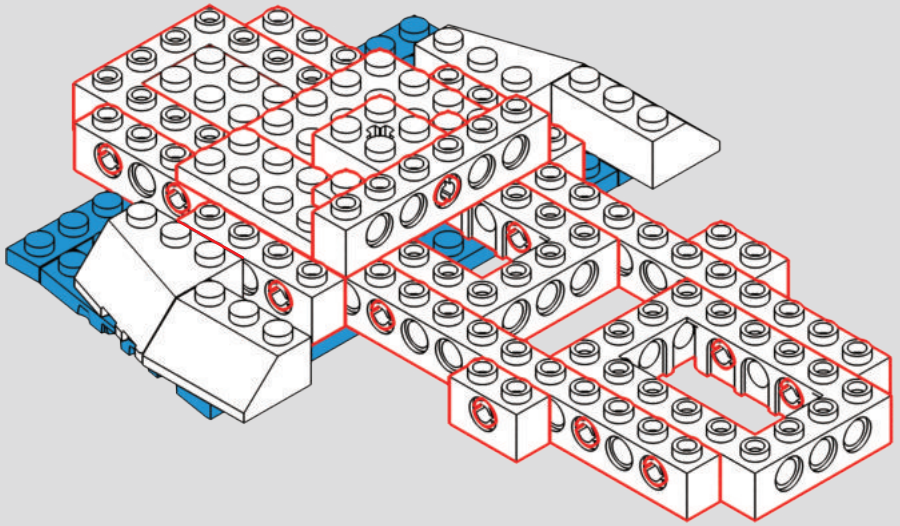

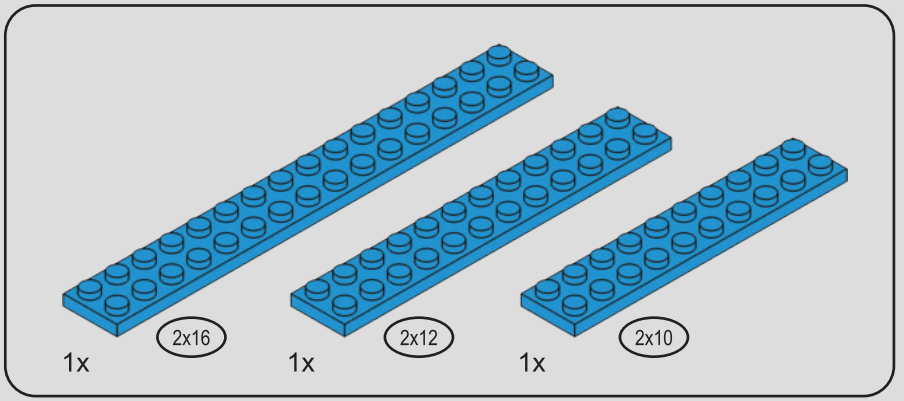

322

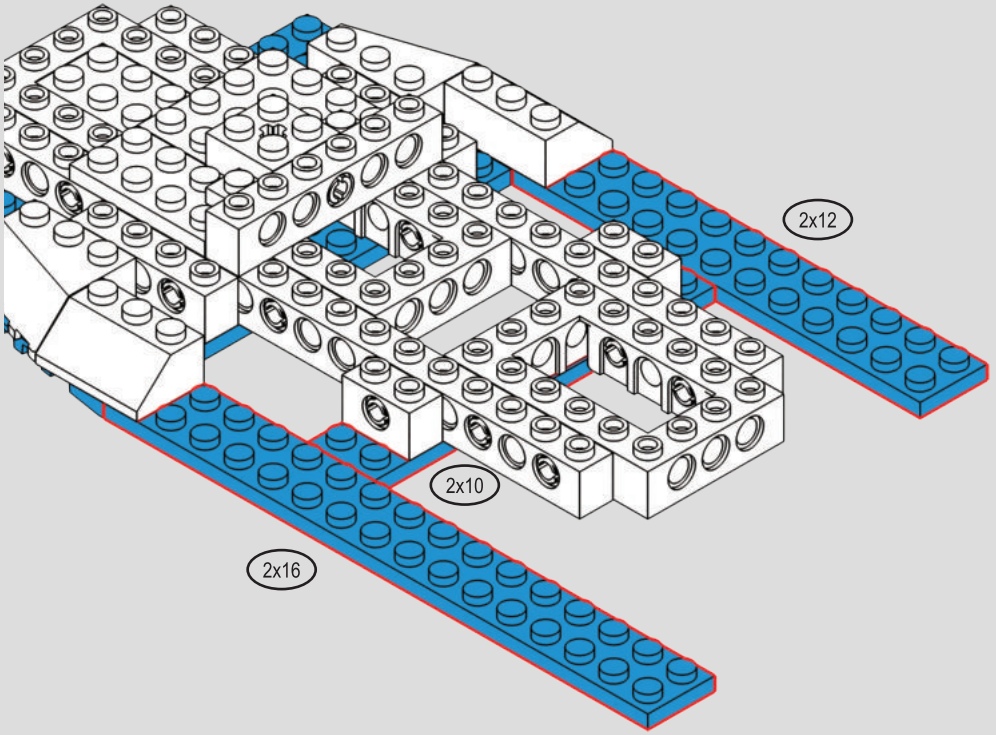

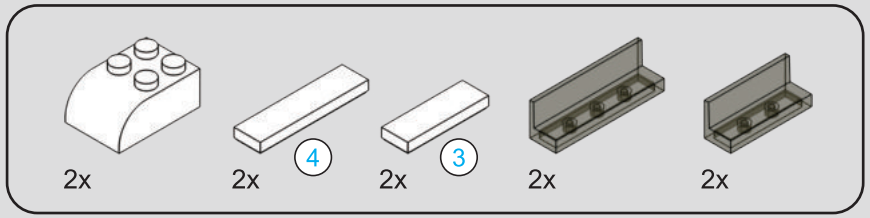

323

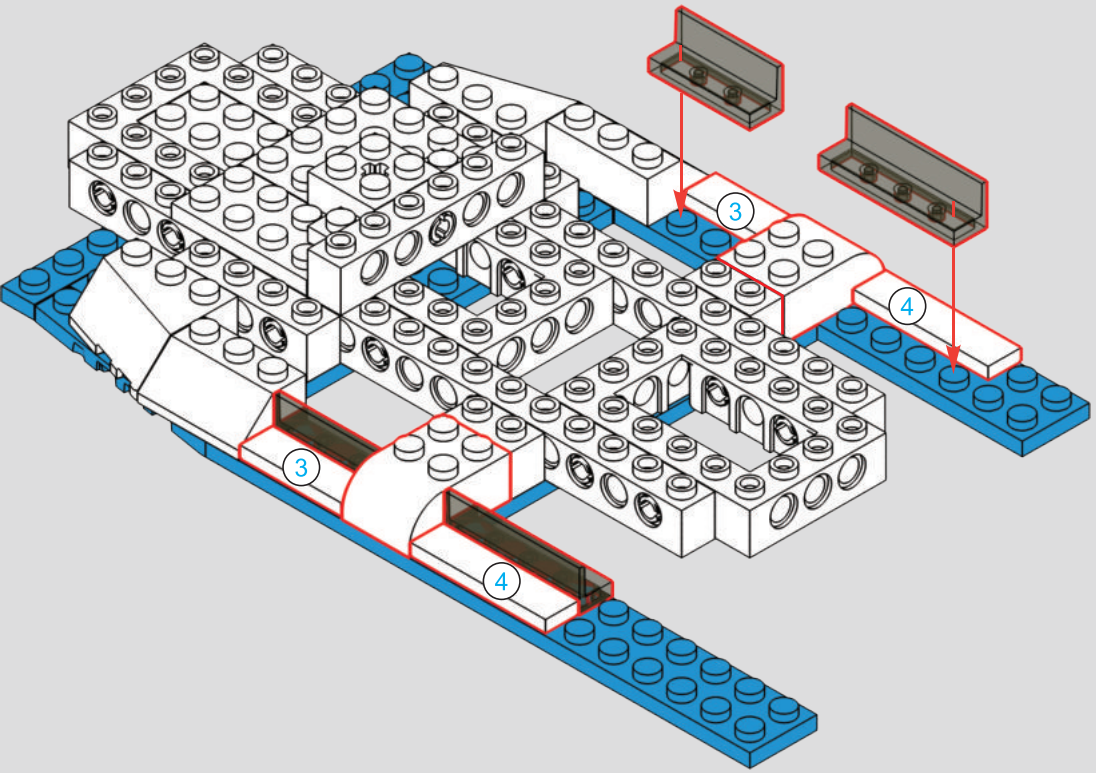

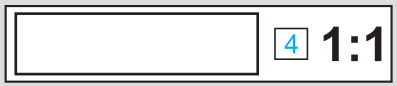

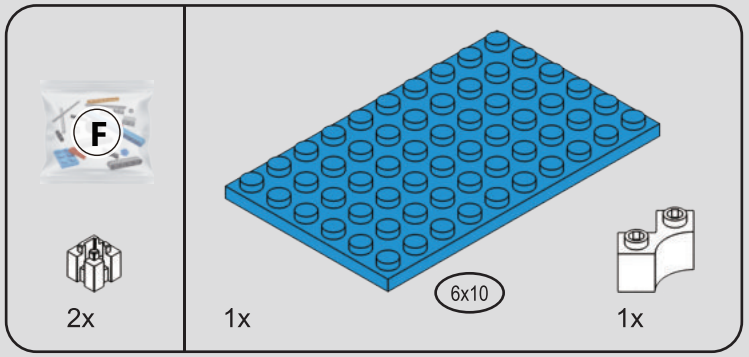

324

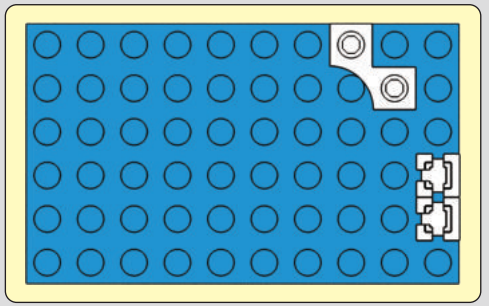

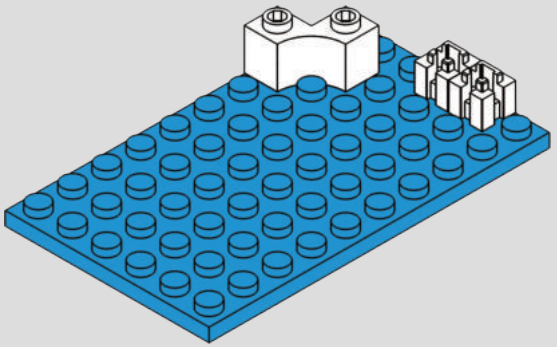

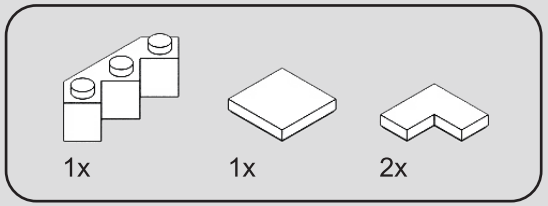

325

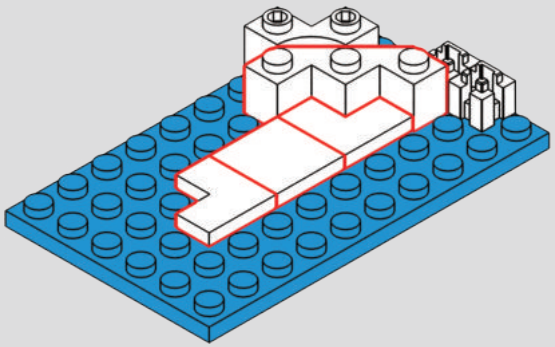

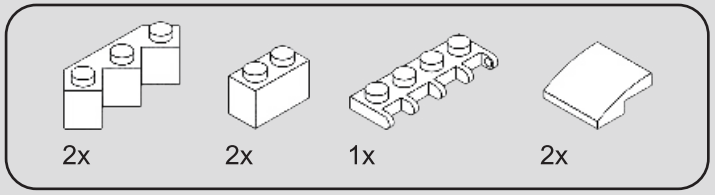

326

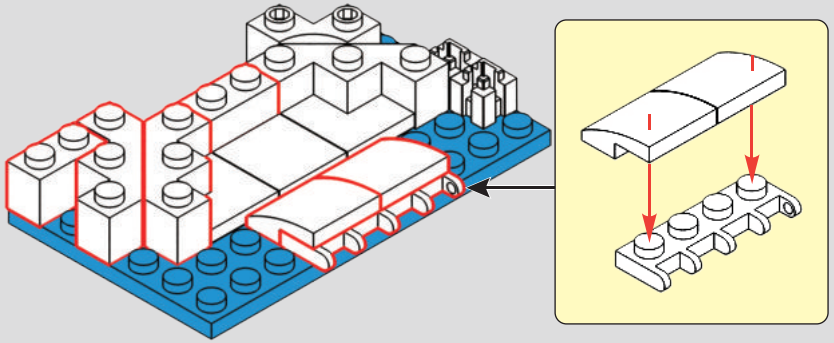

327

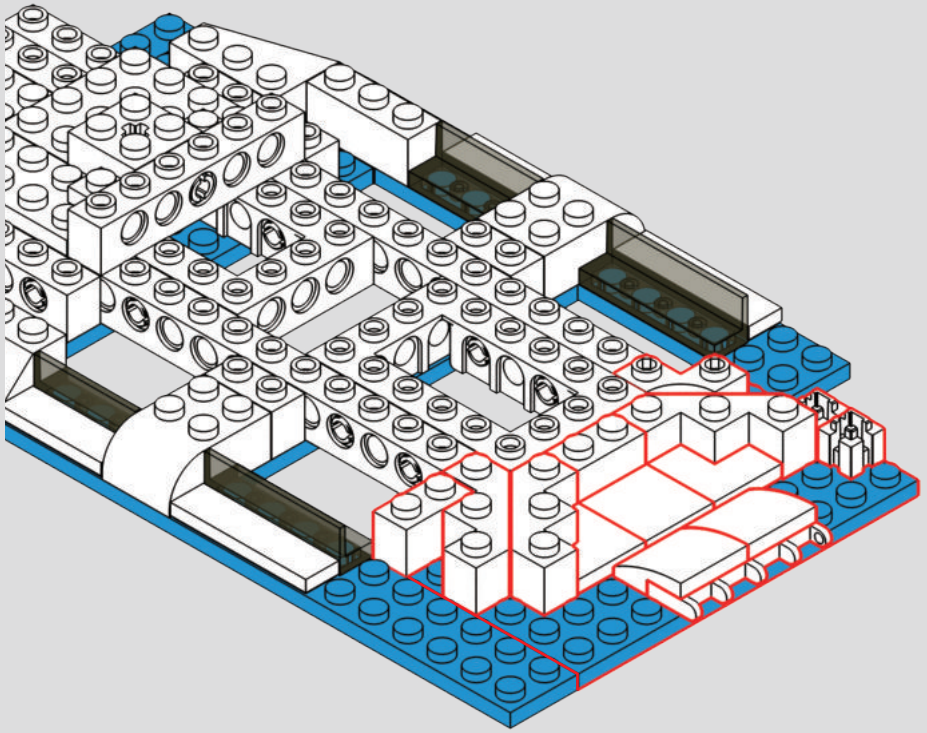

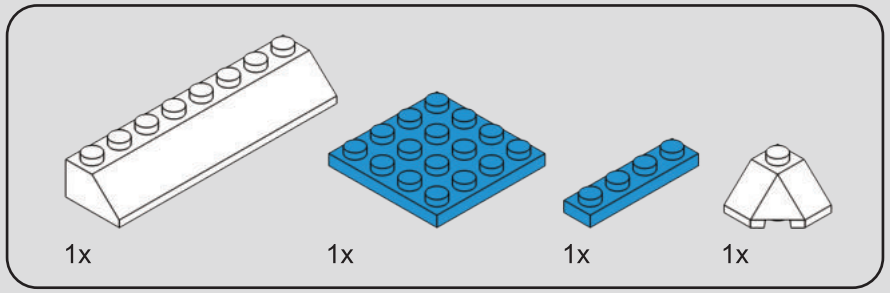

328

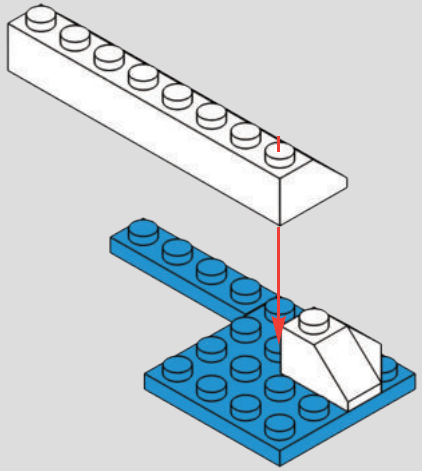

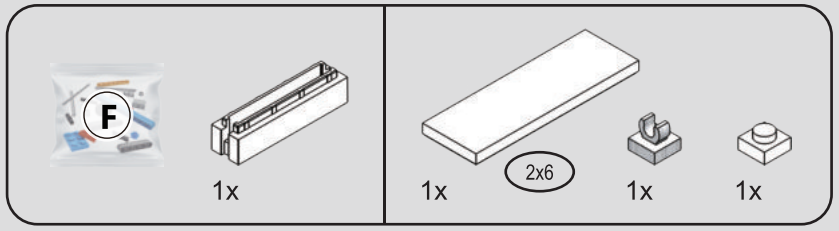

329

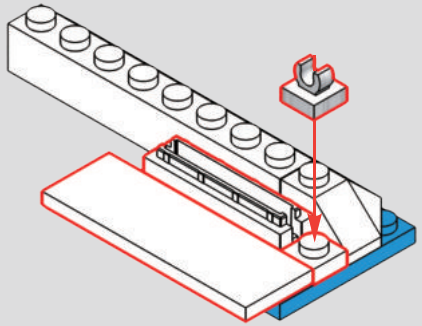

330

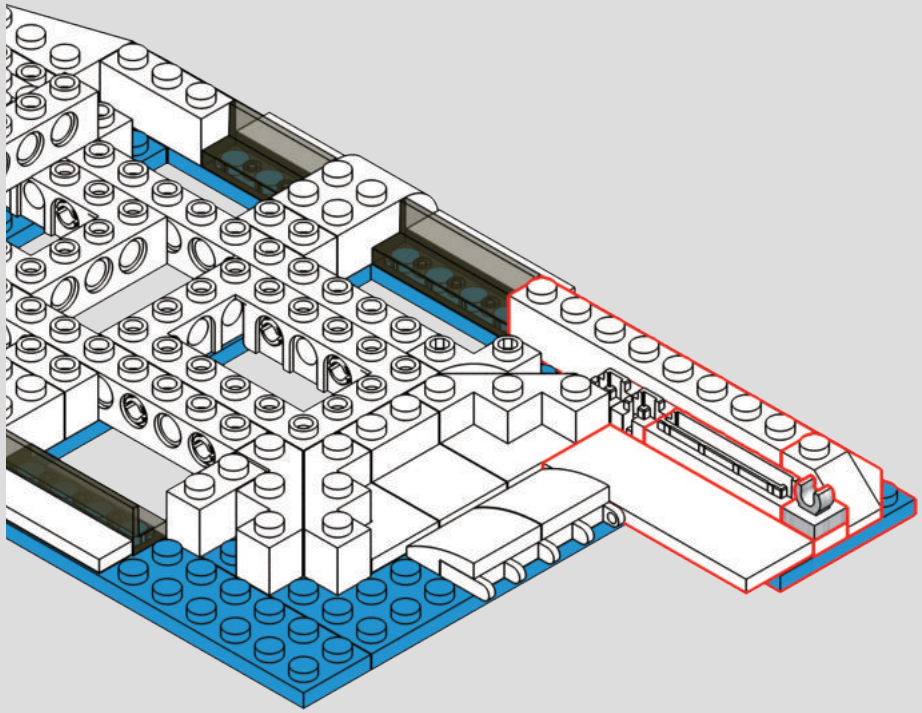

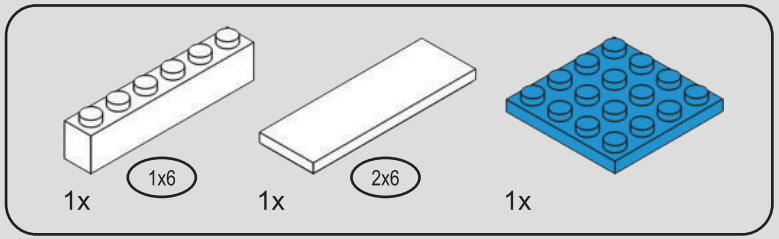

331

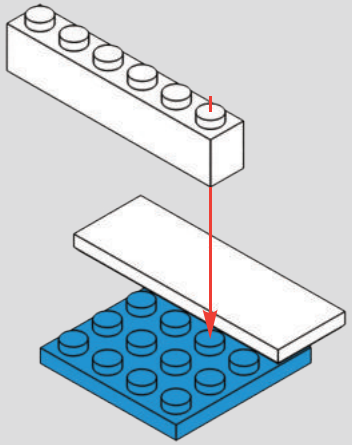

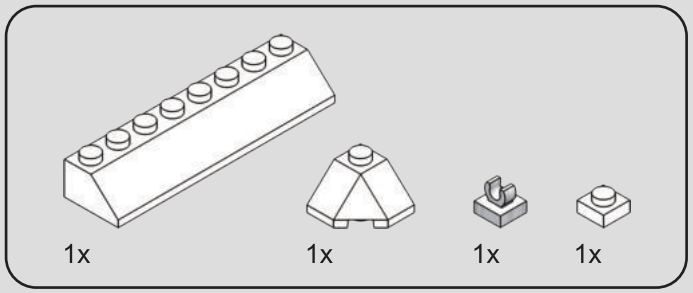

332

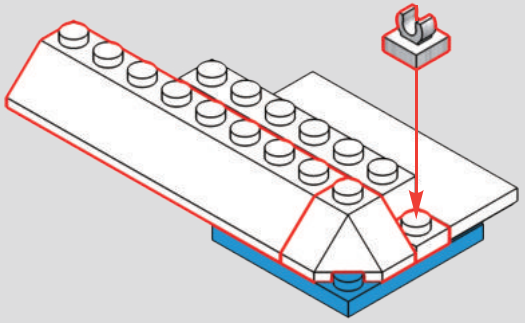

333

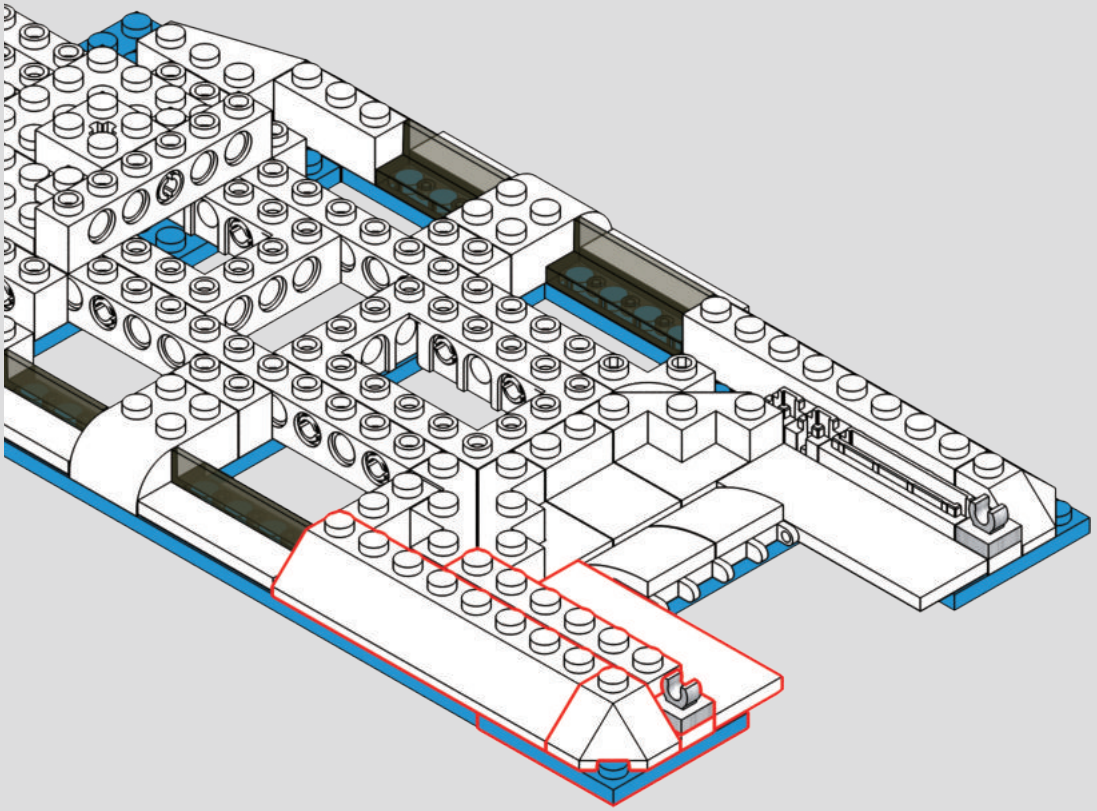

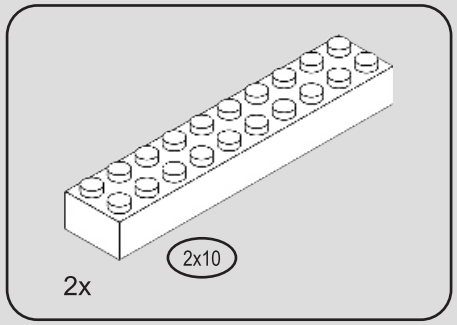

334

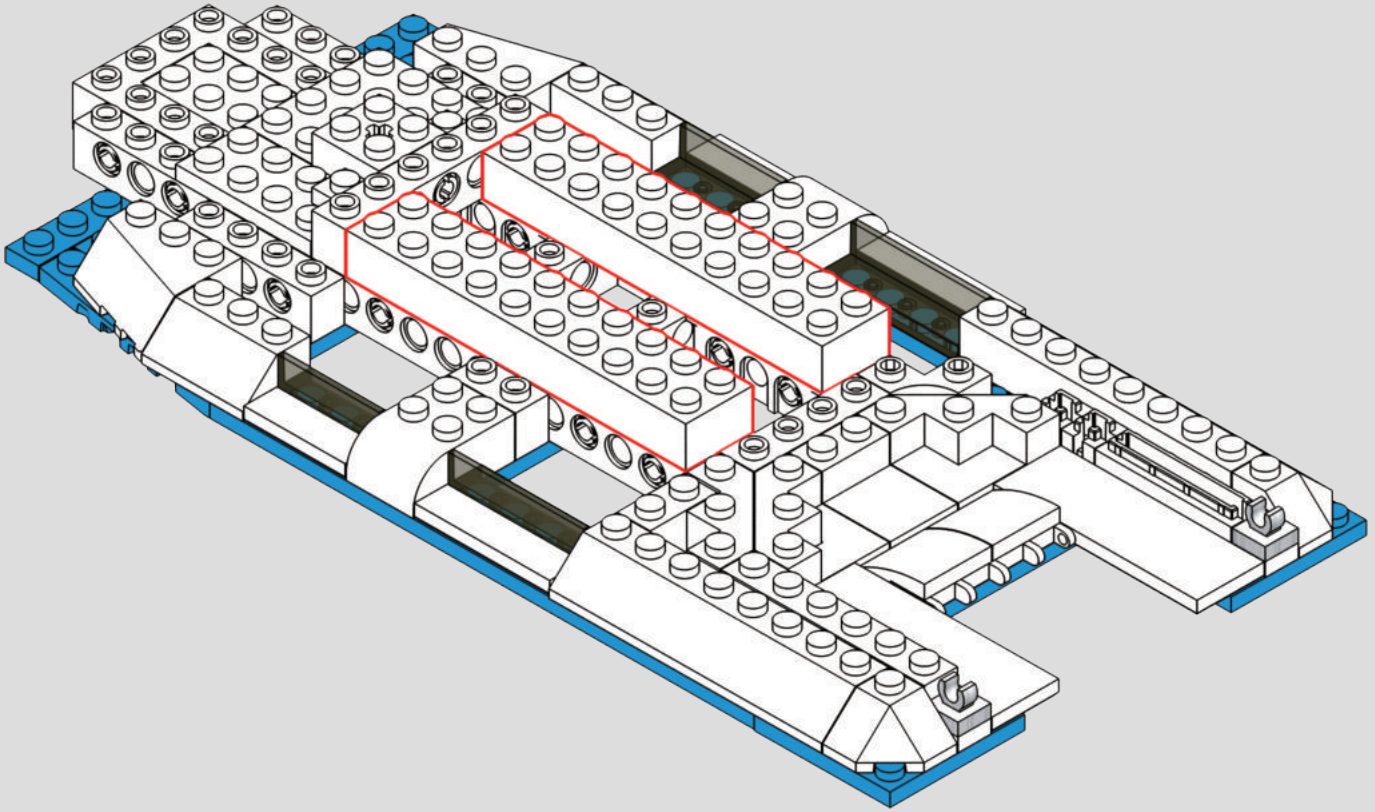

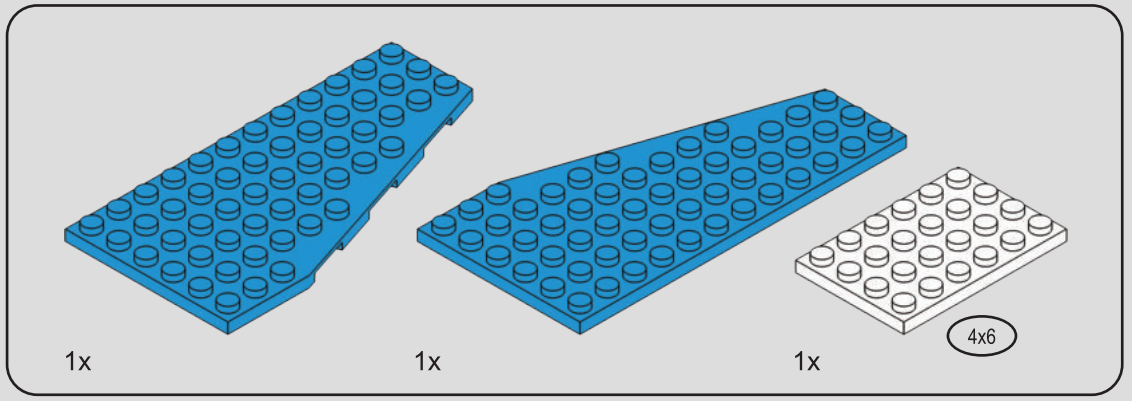

335

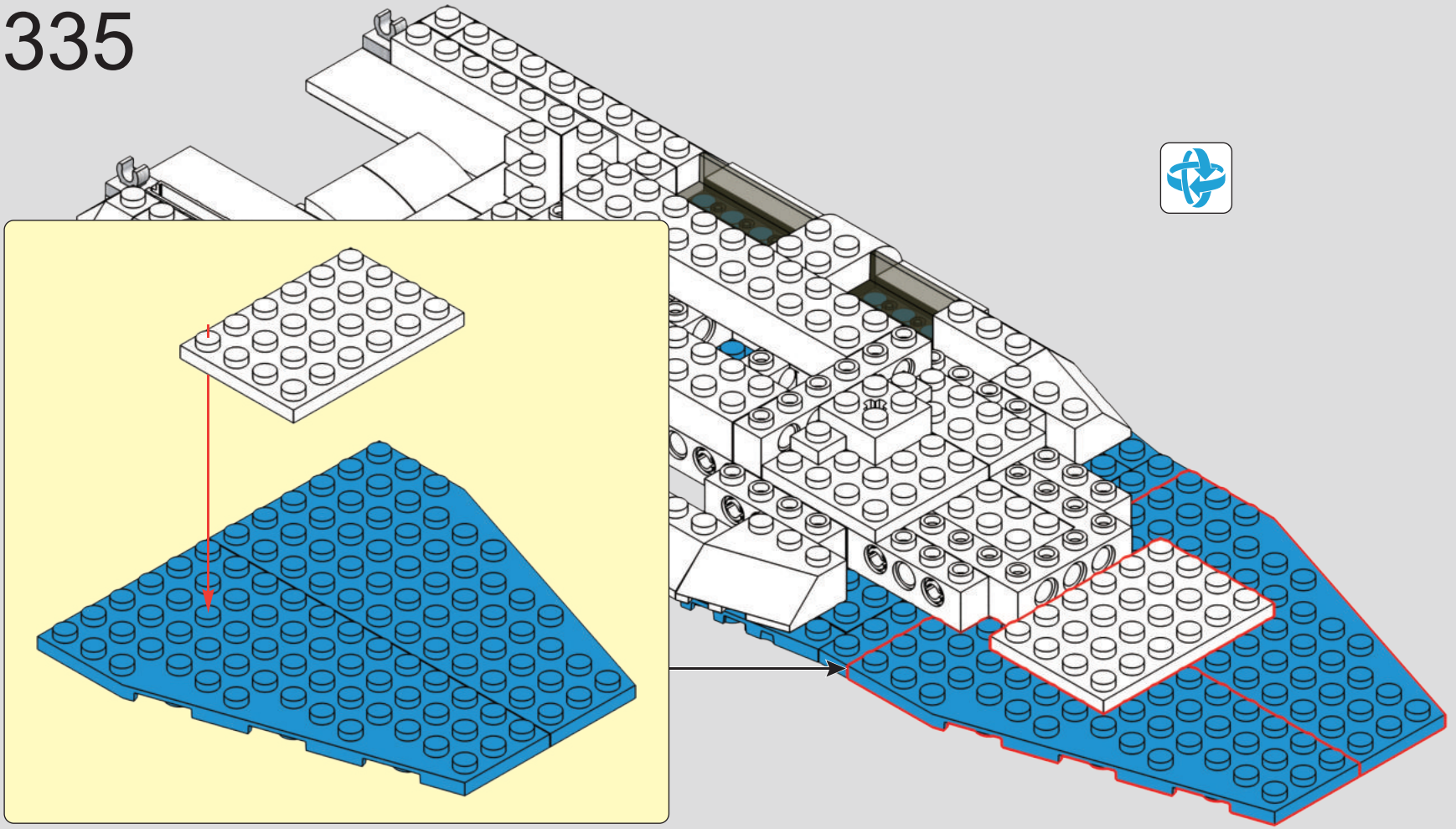

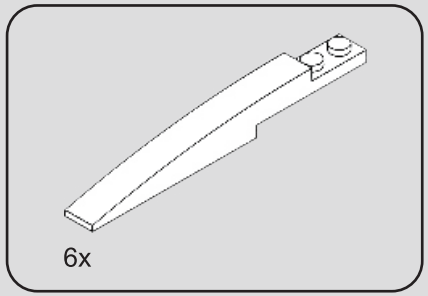

336

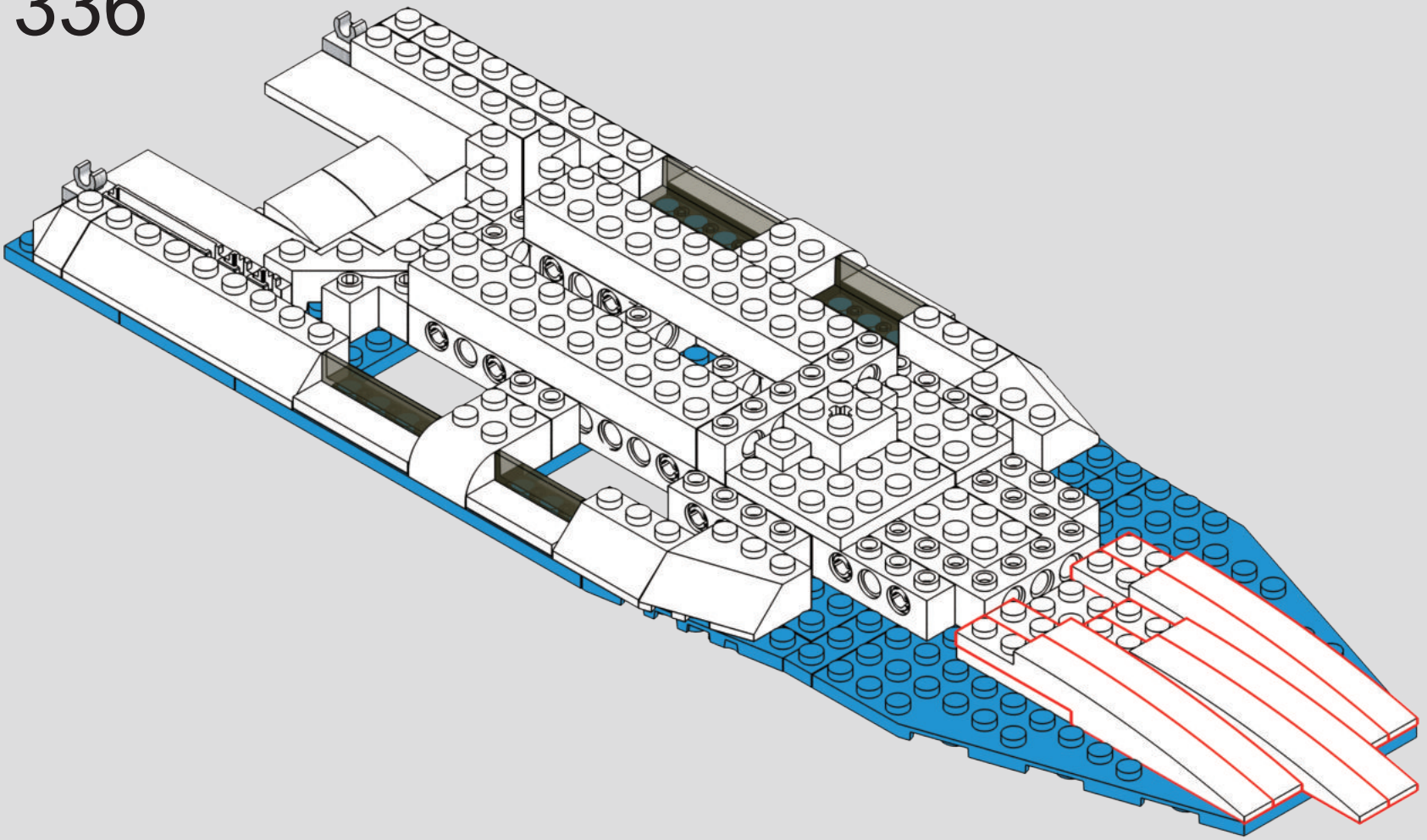

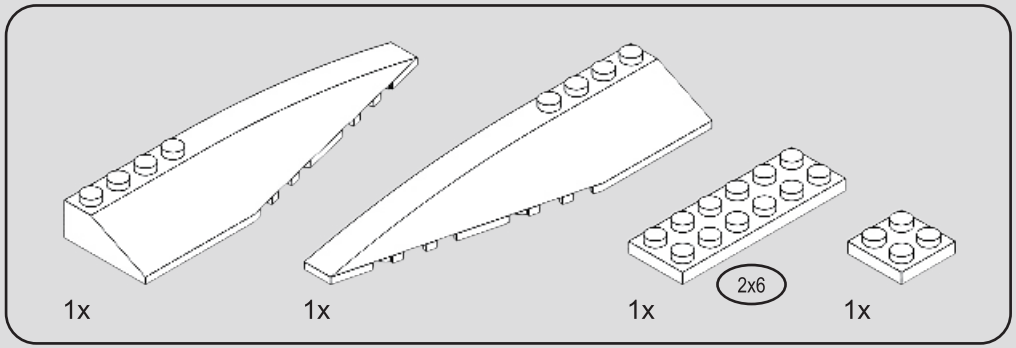

337

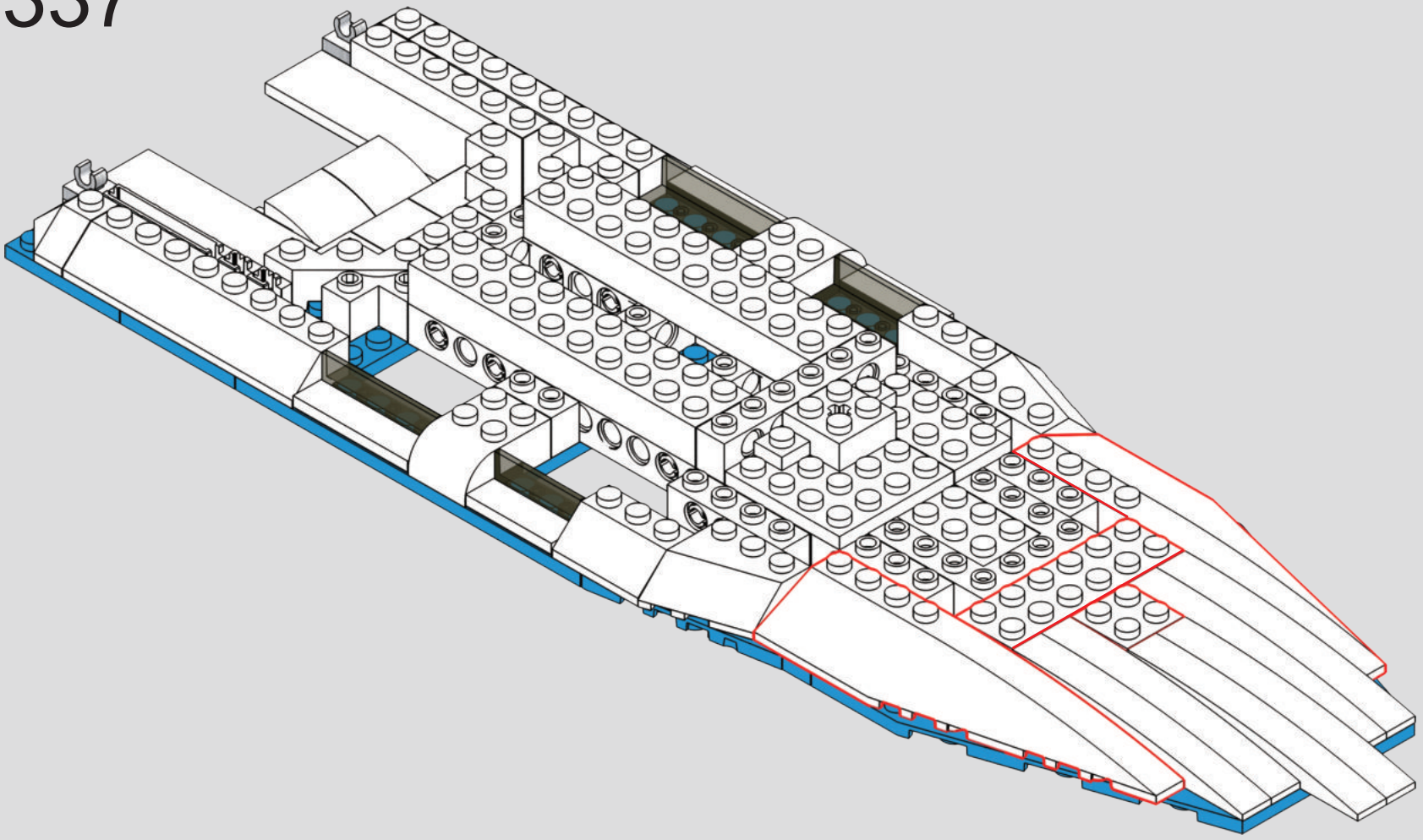

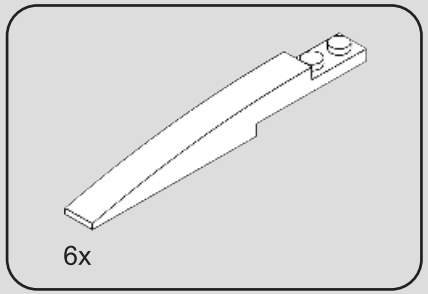

338

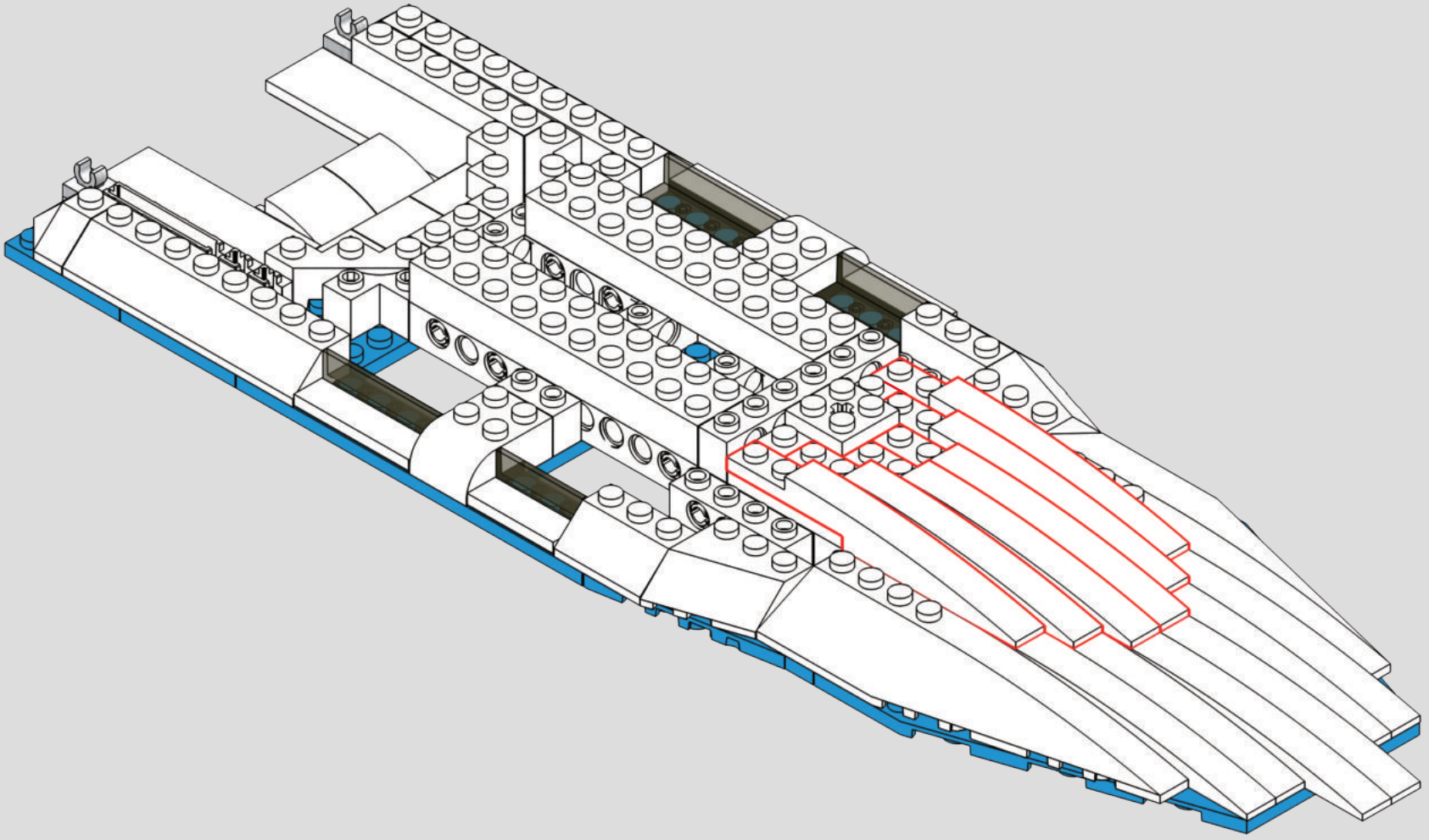

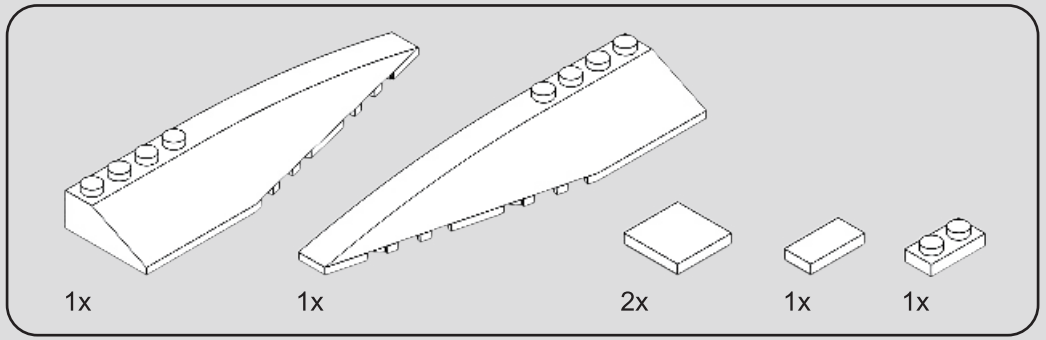

339

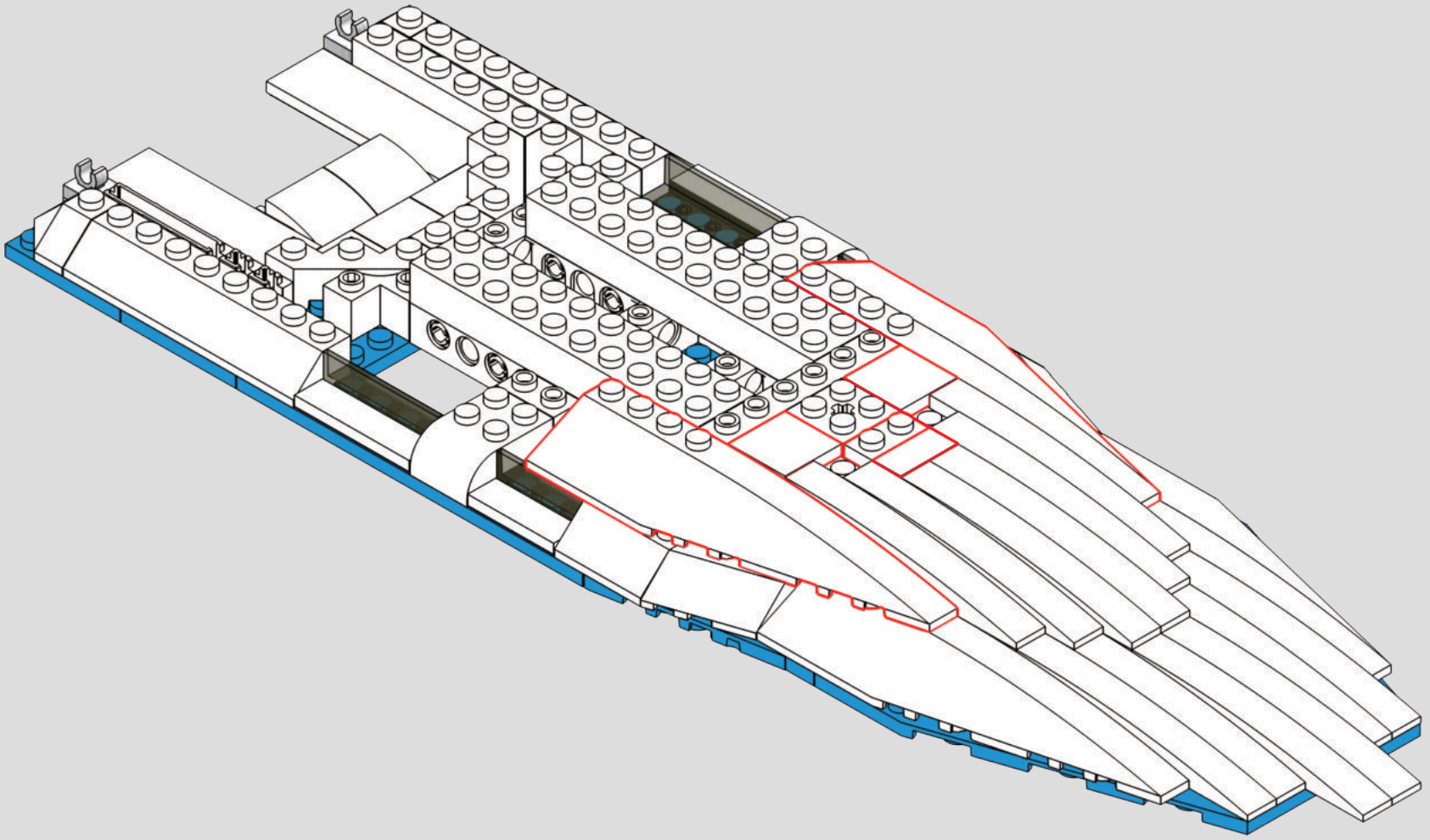

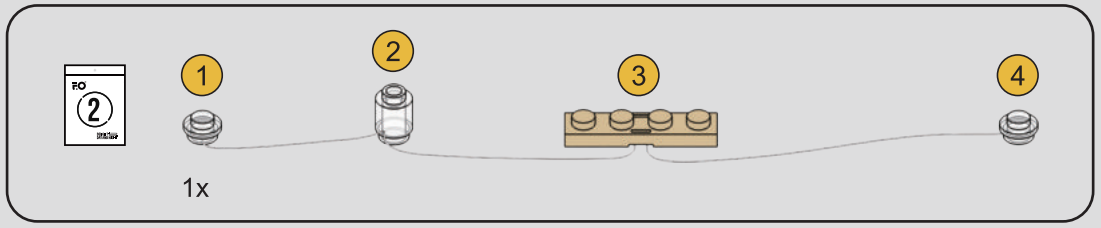

340

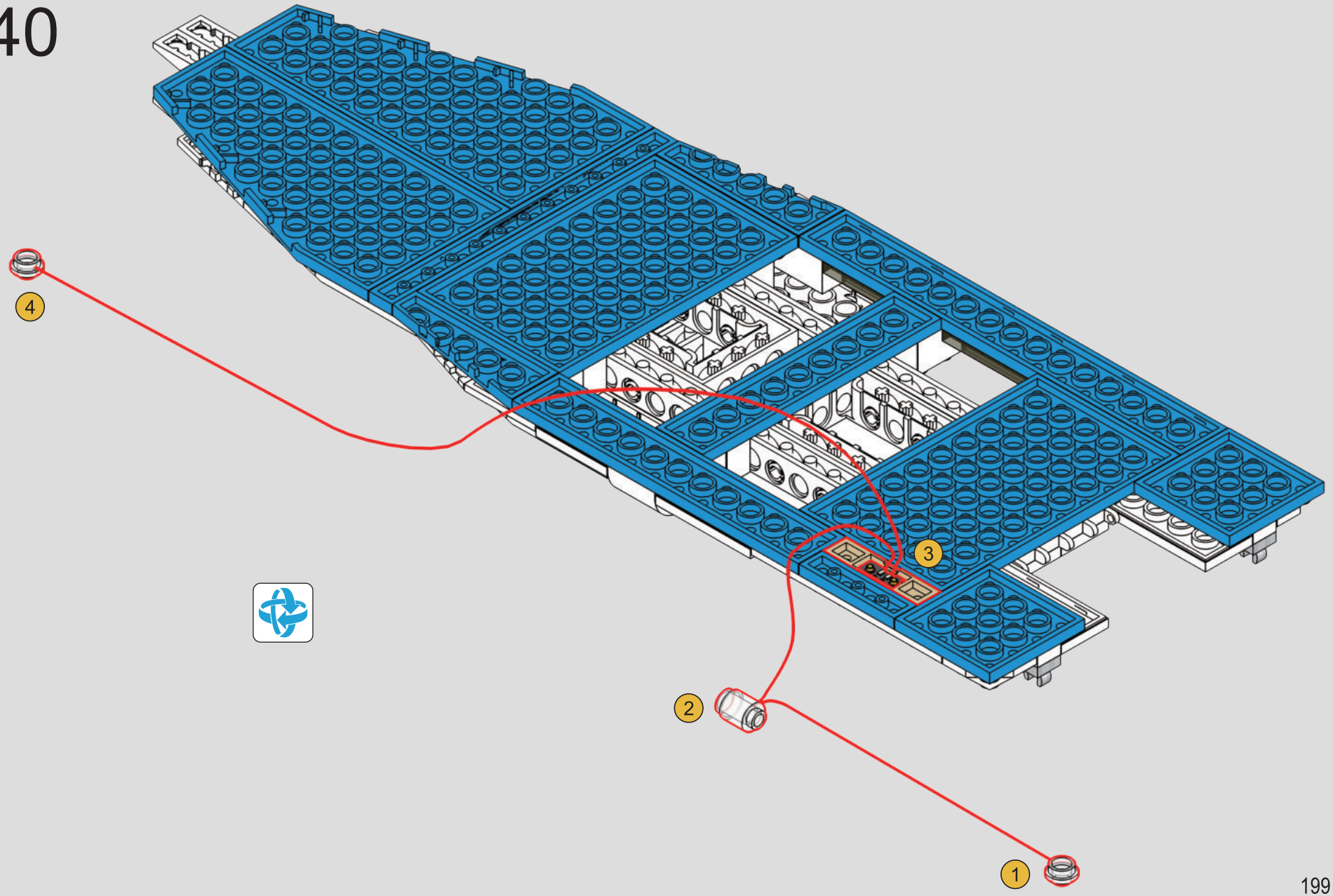

341

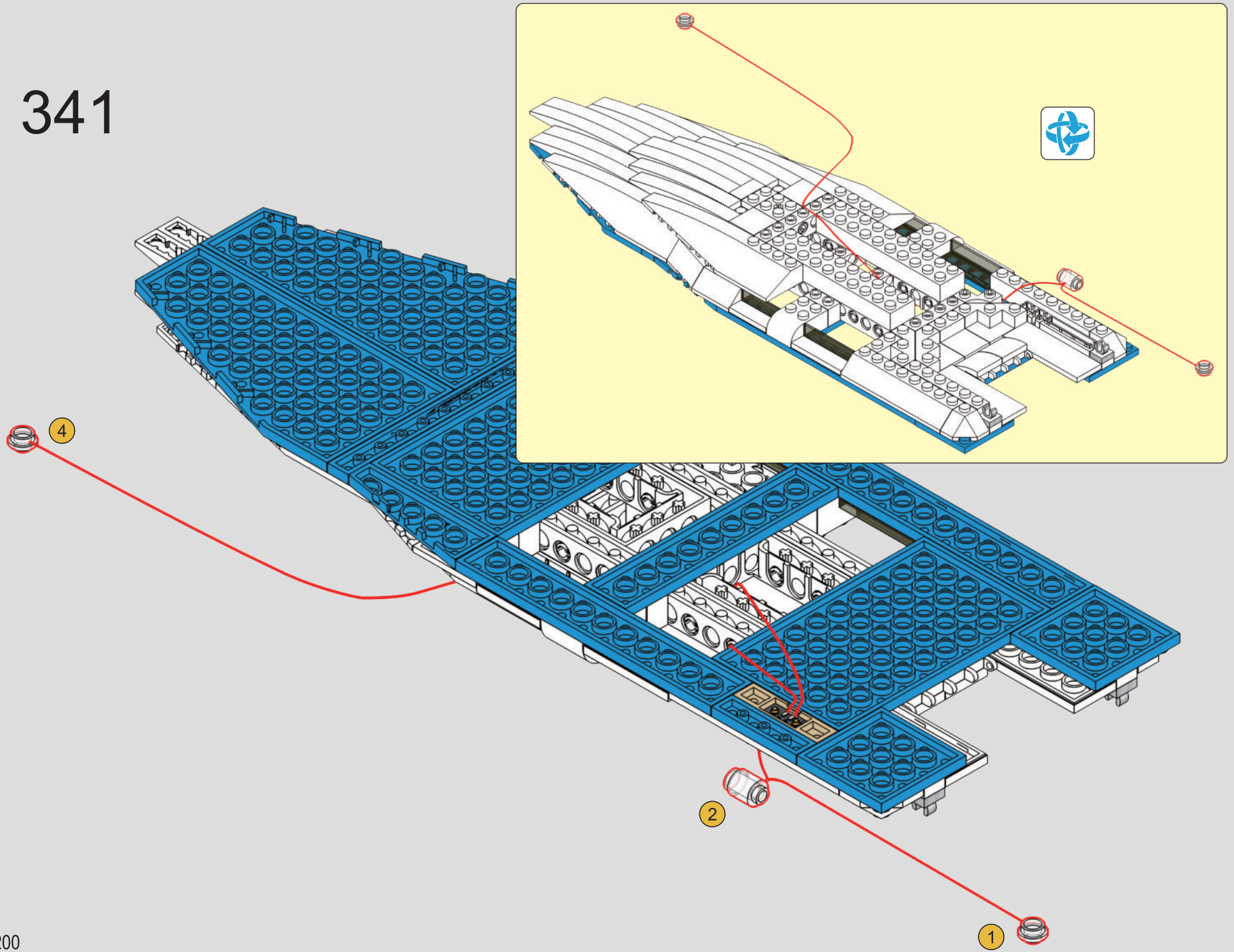



342

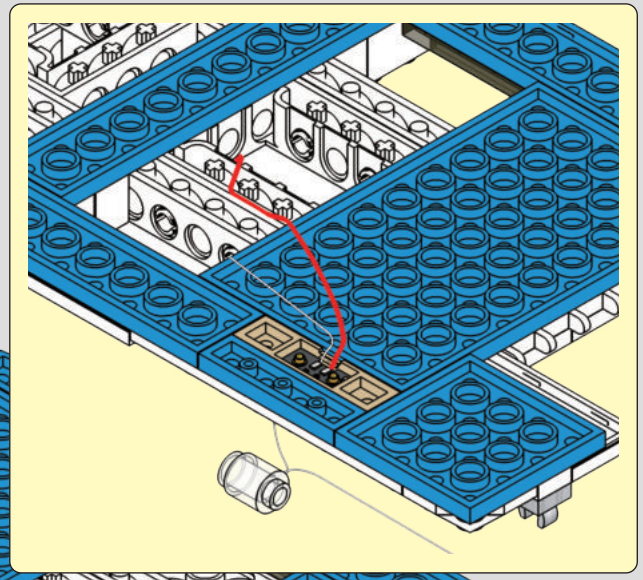

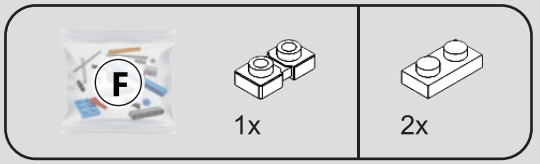

343

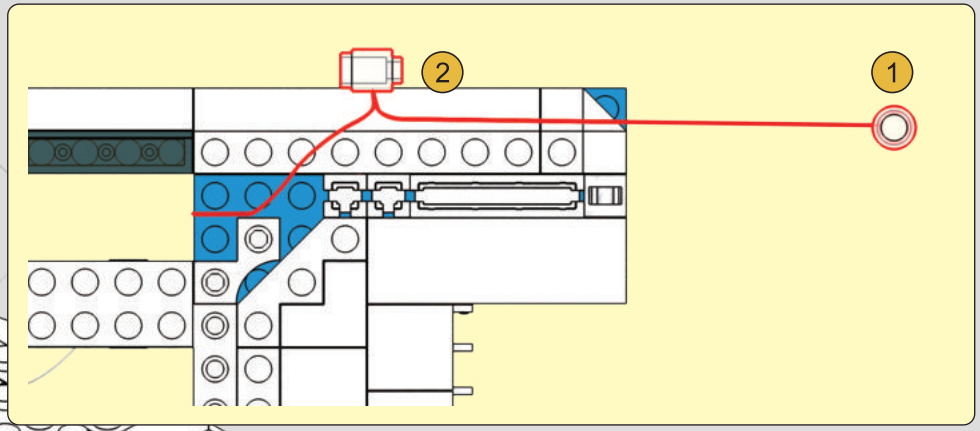

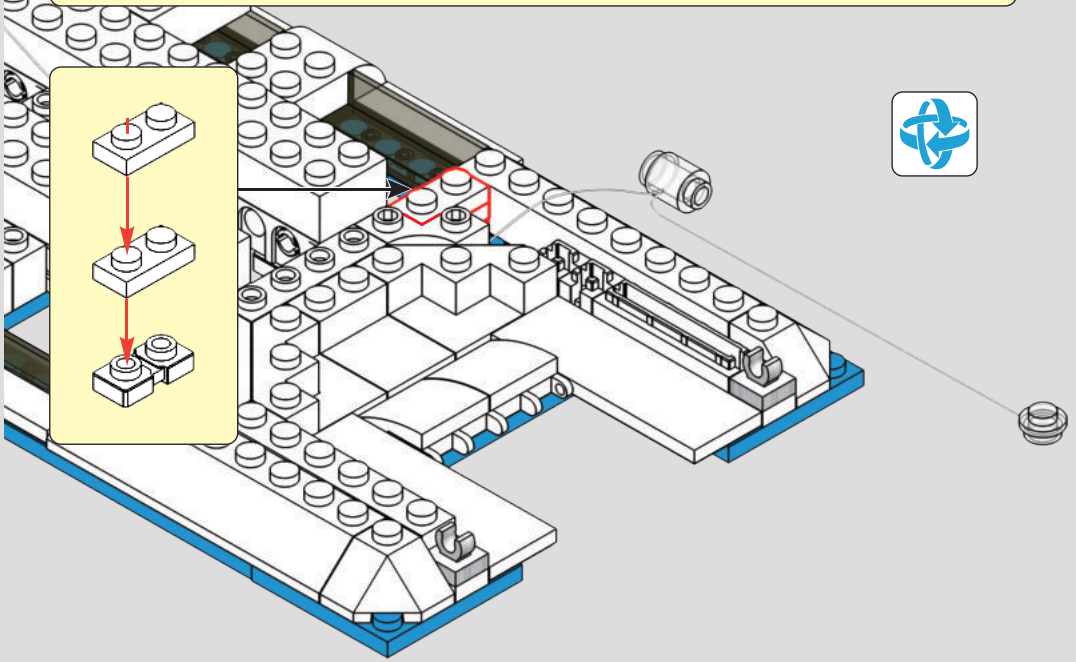

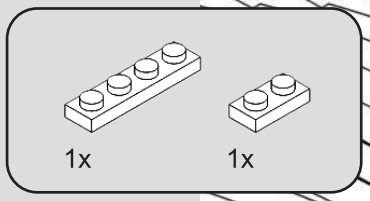

344

1

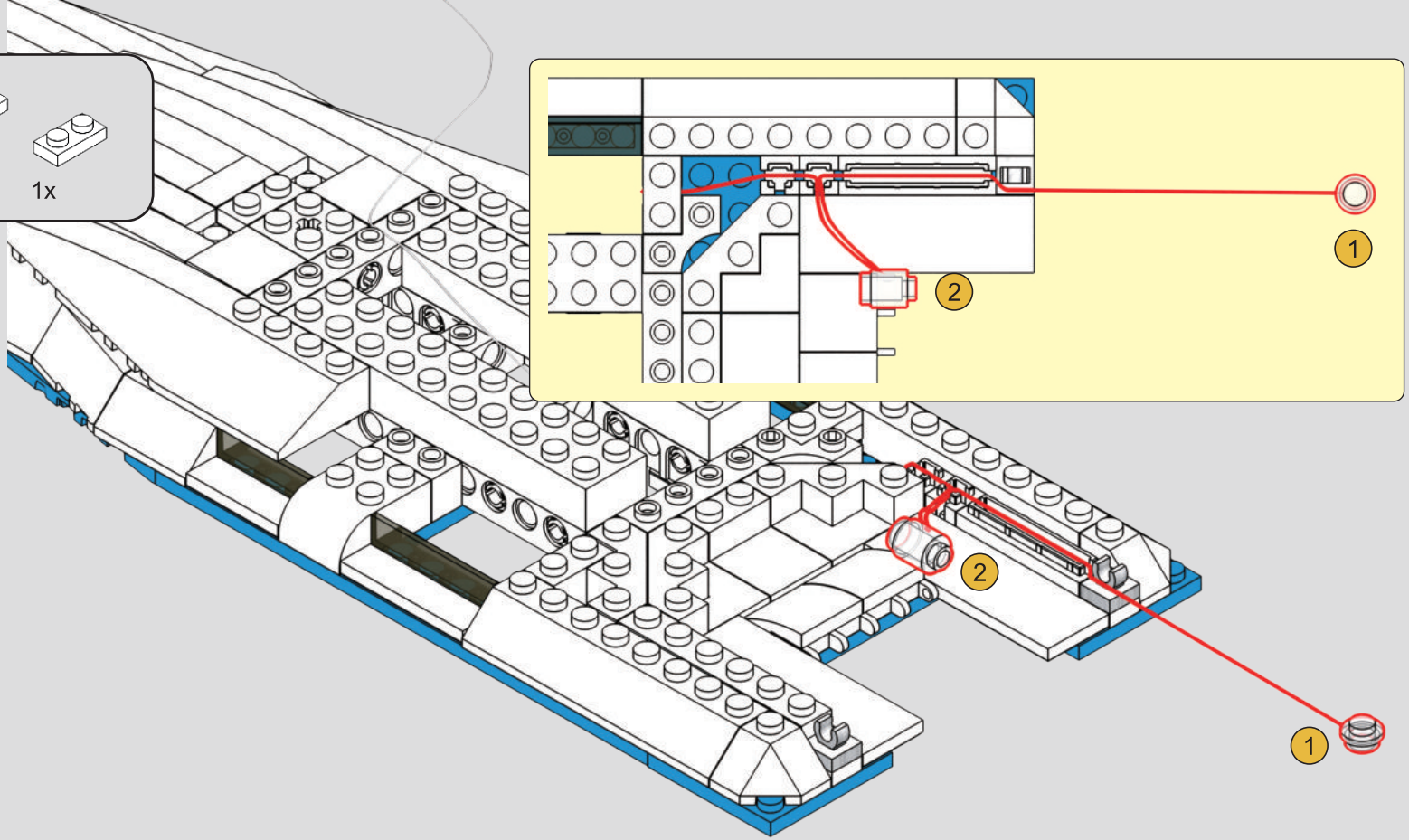

2

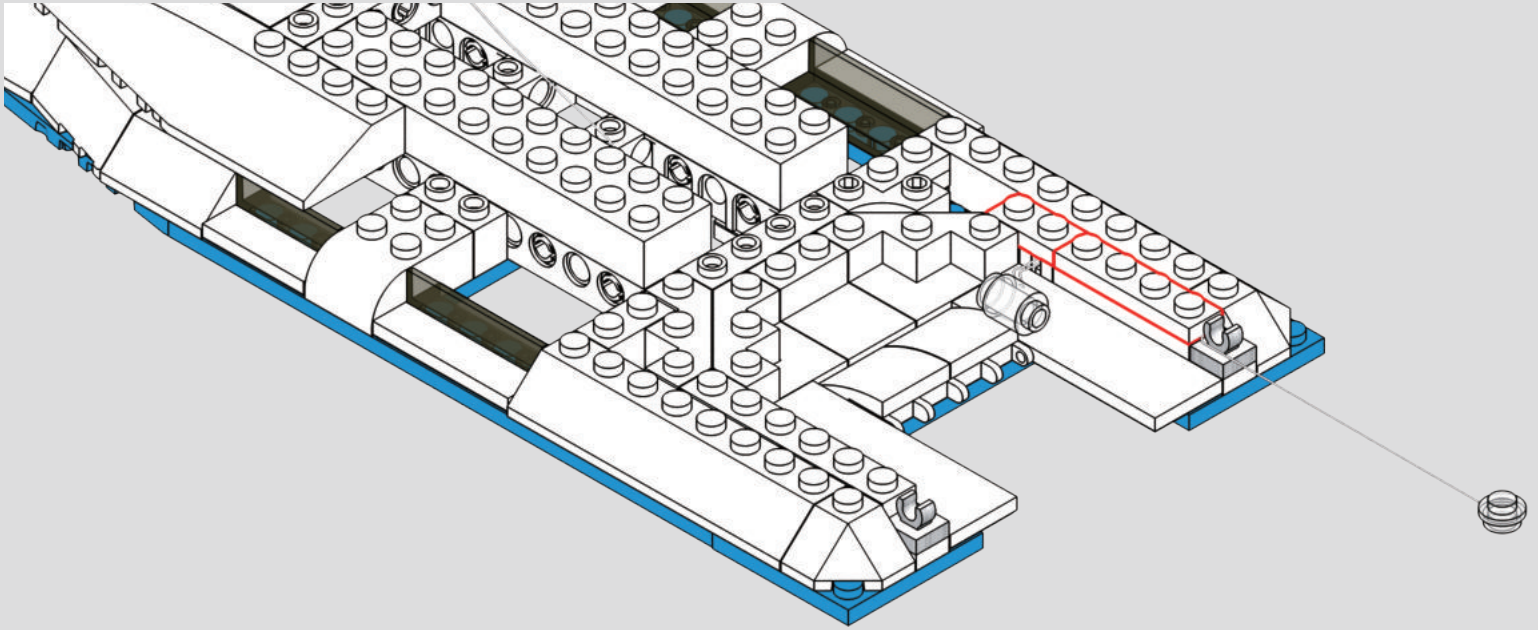

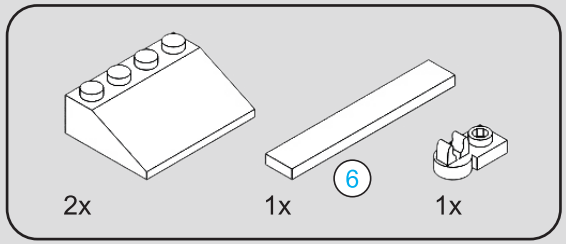

345



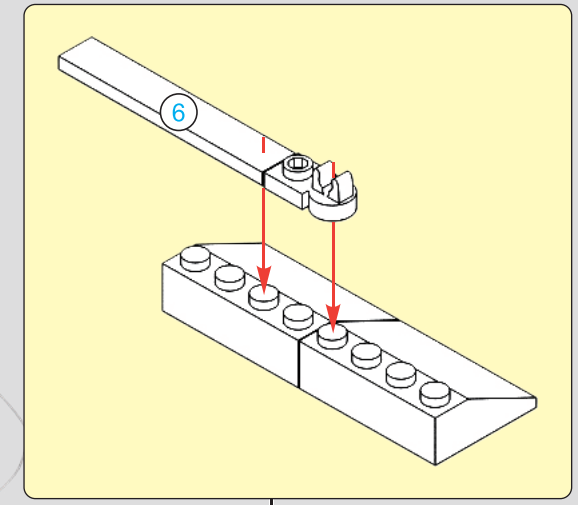

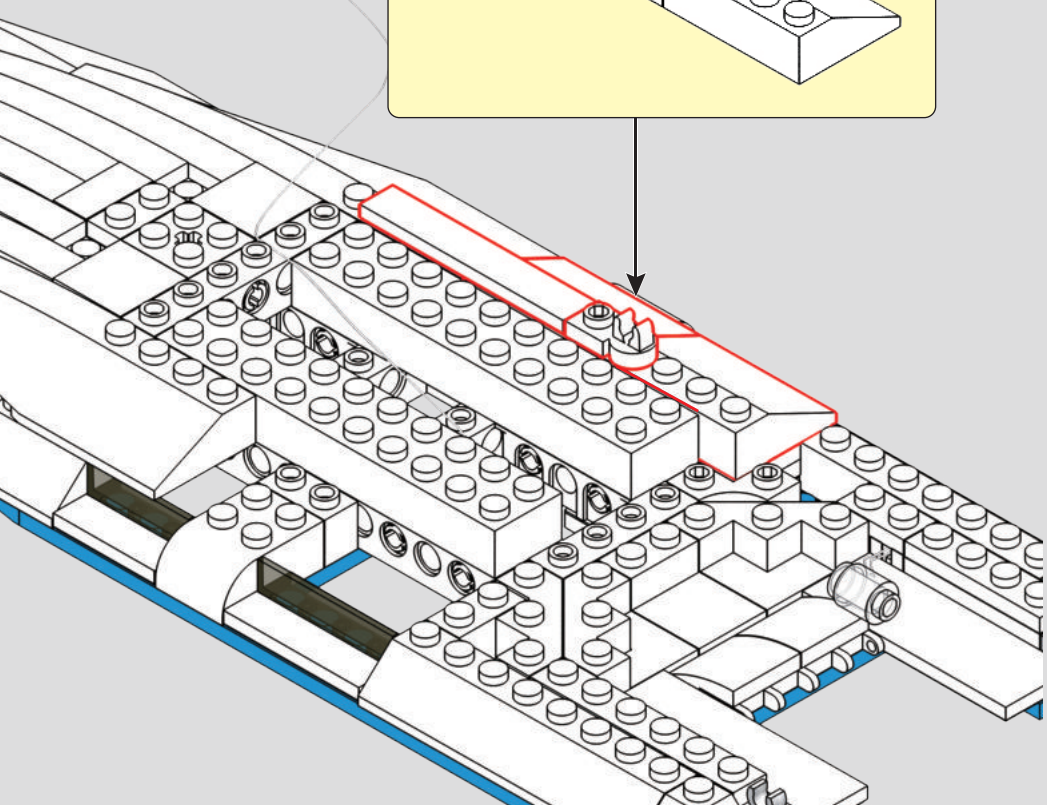

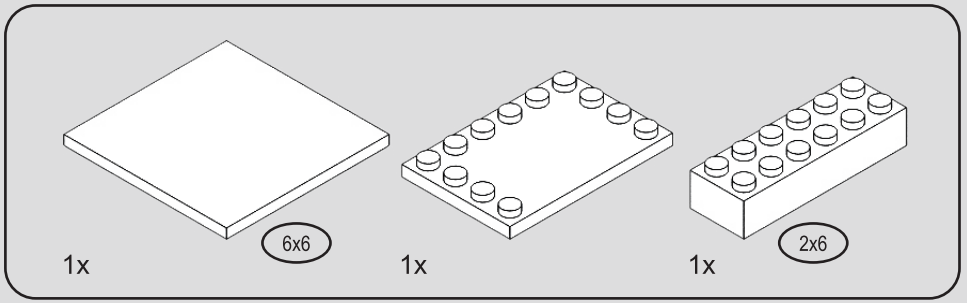

346

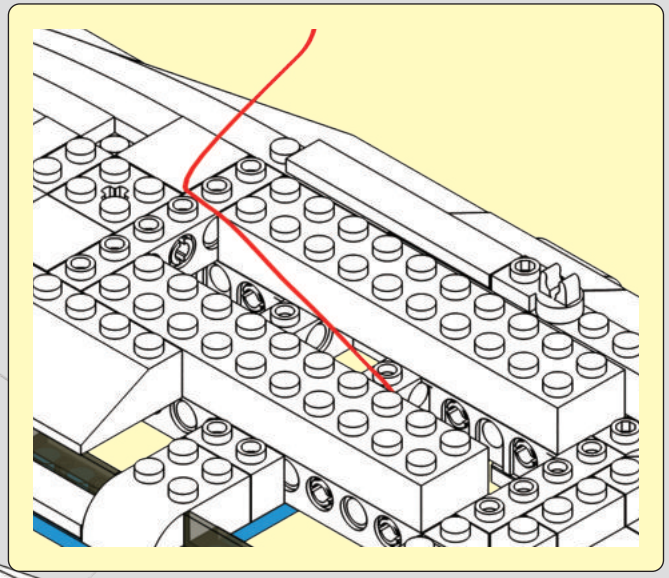

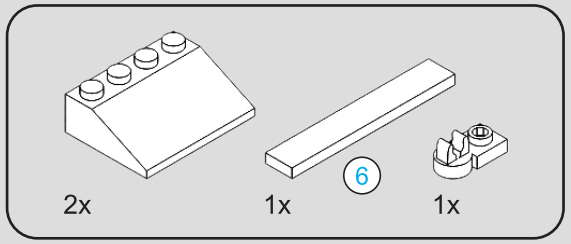

347

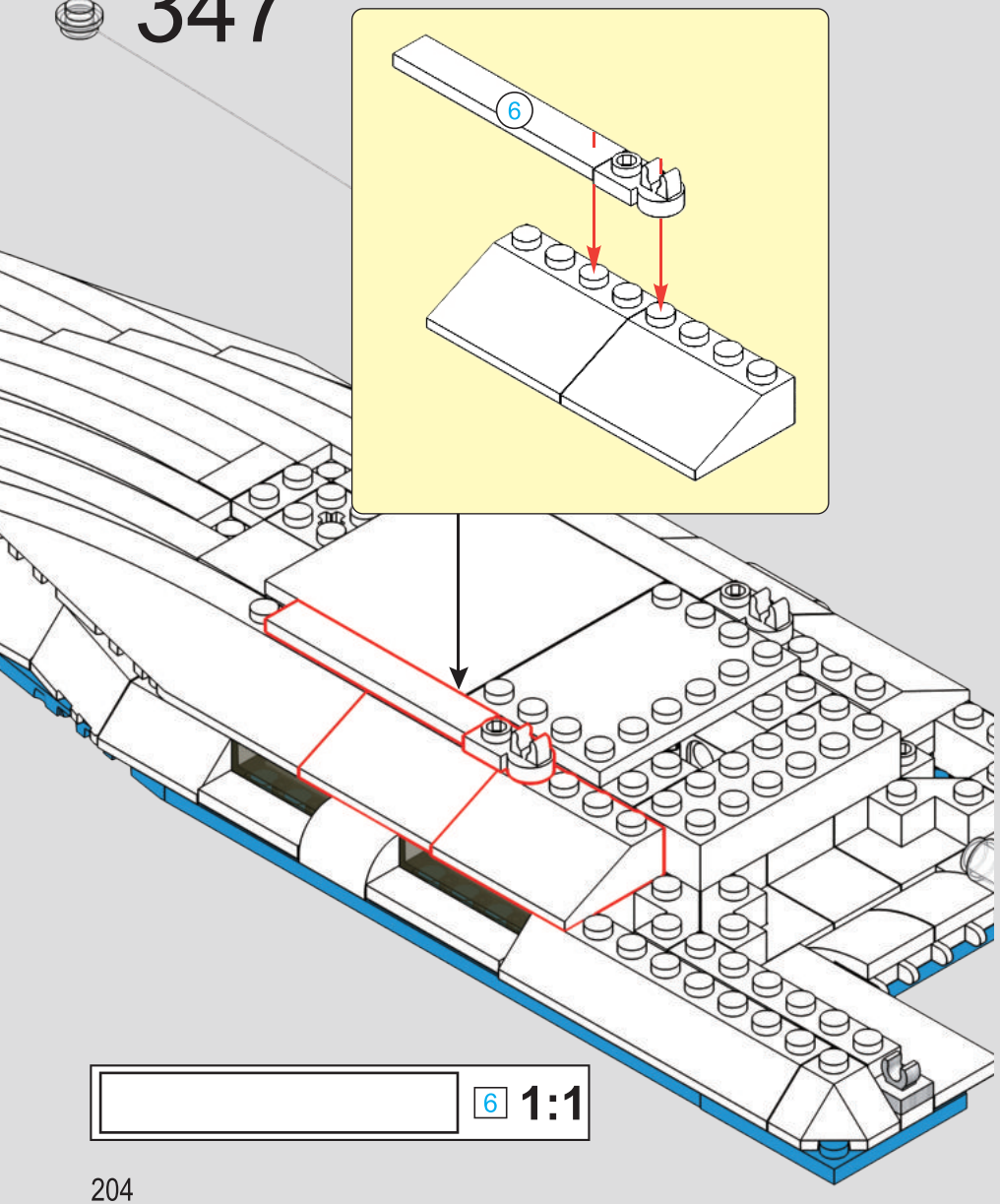

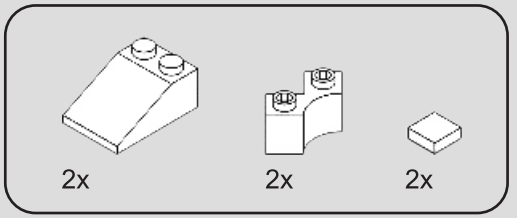

348

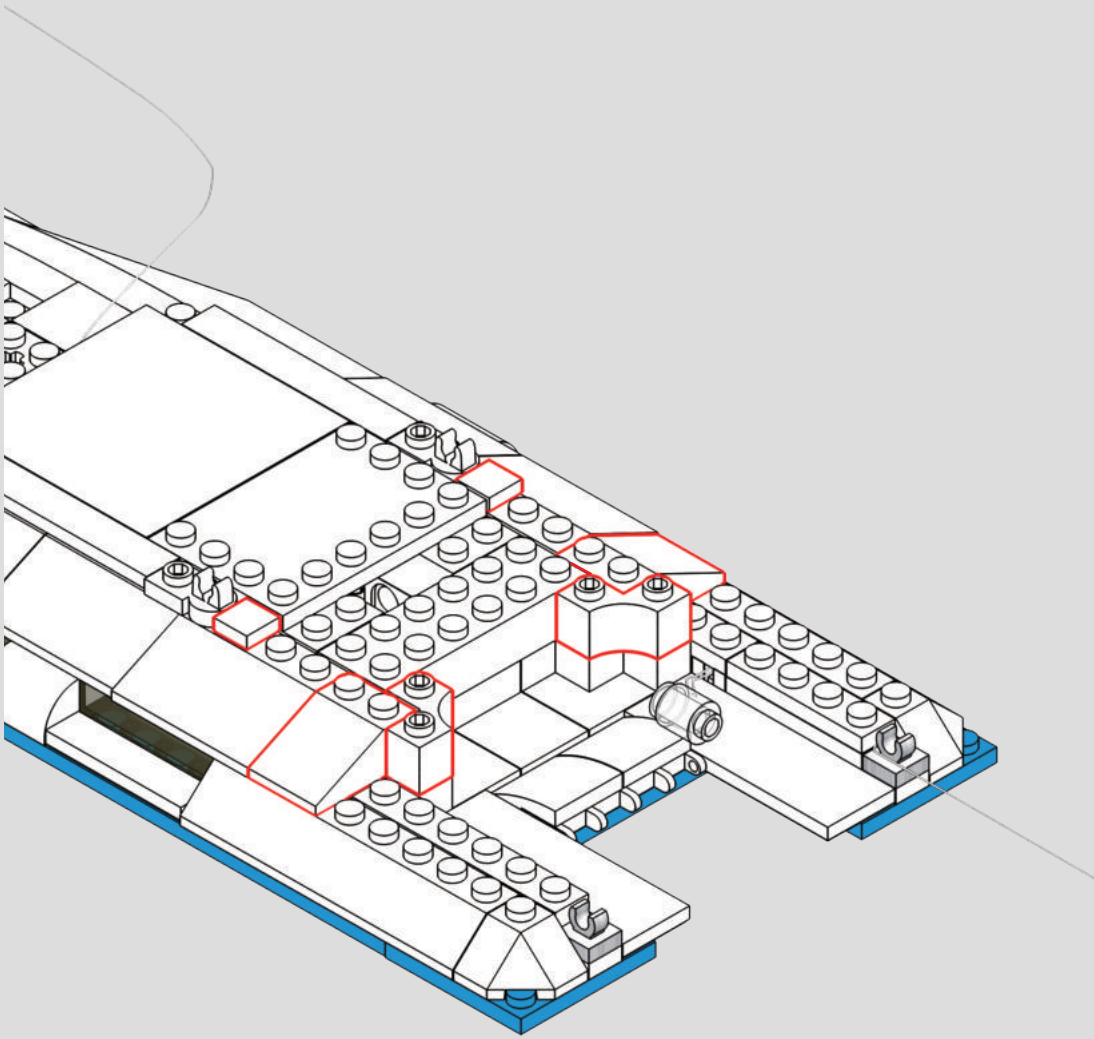

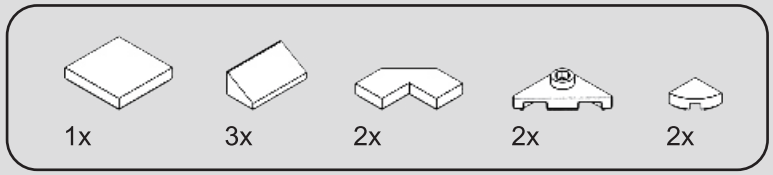

349

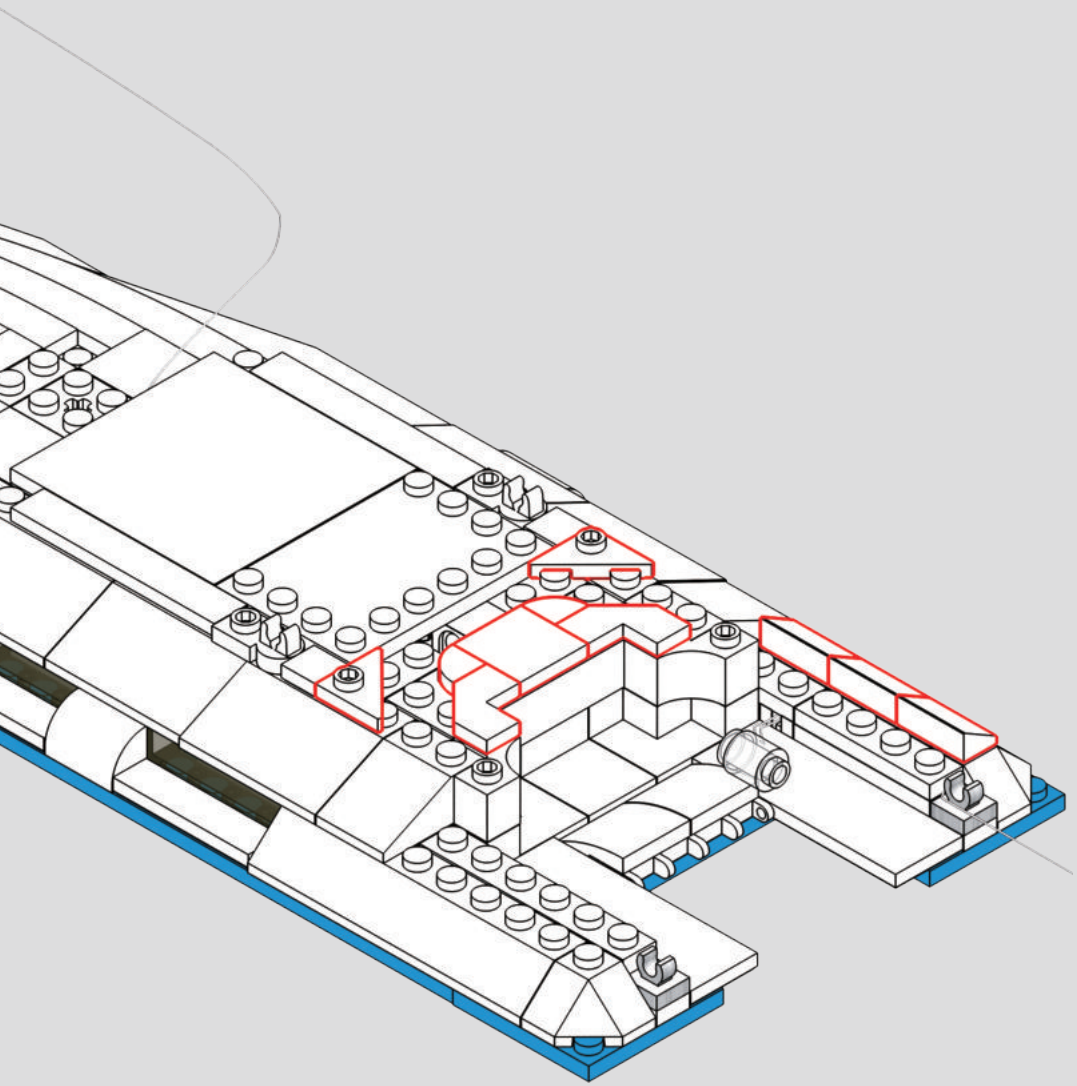

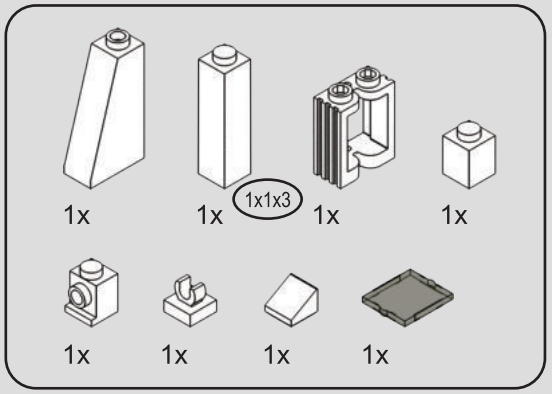

350

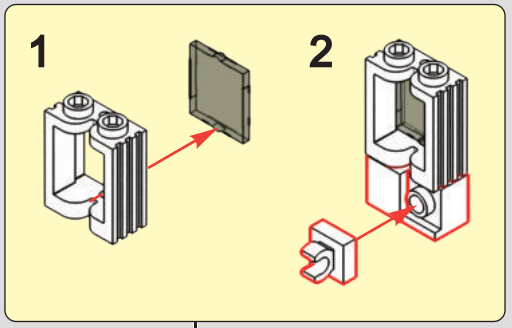

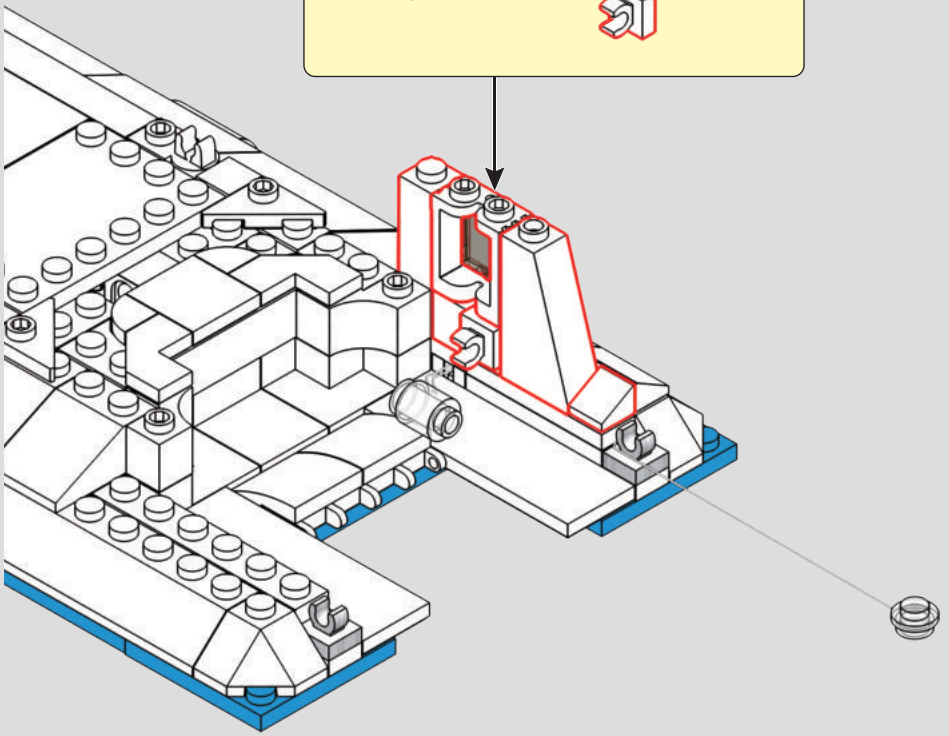

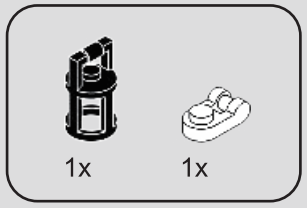

351

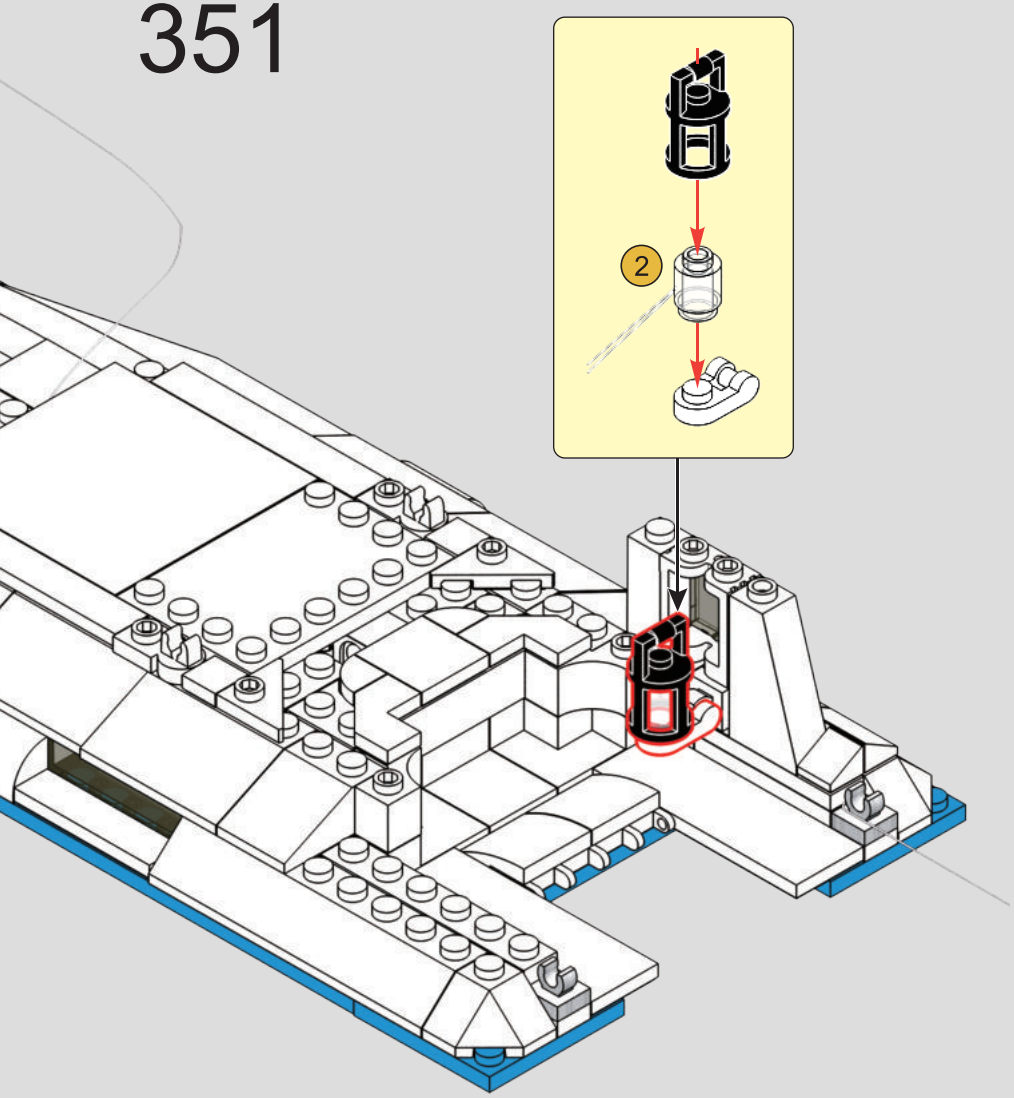

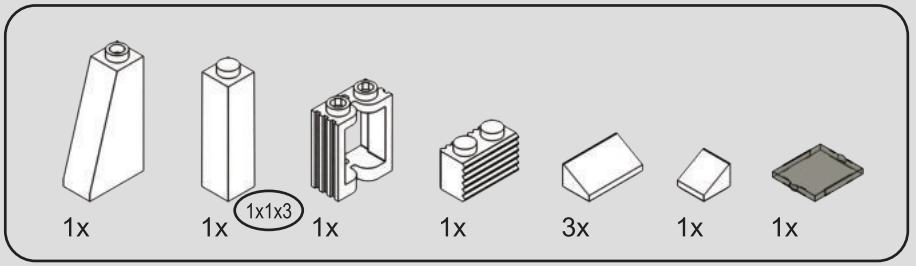

352

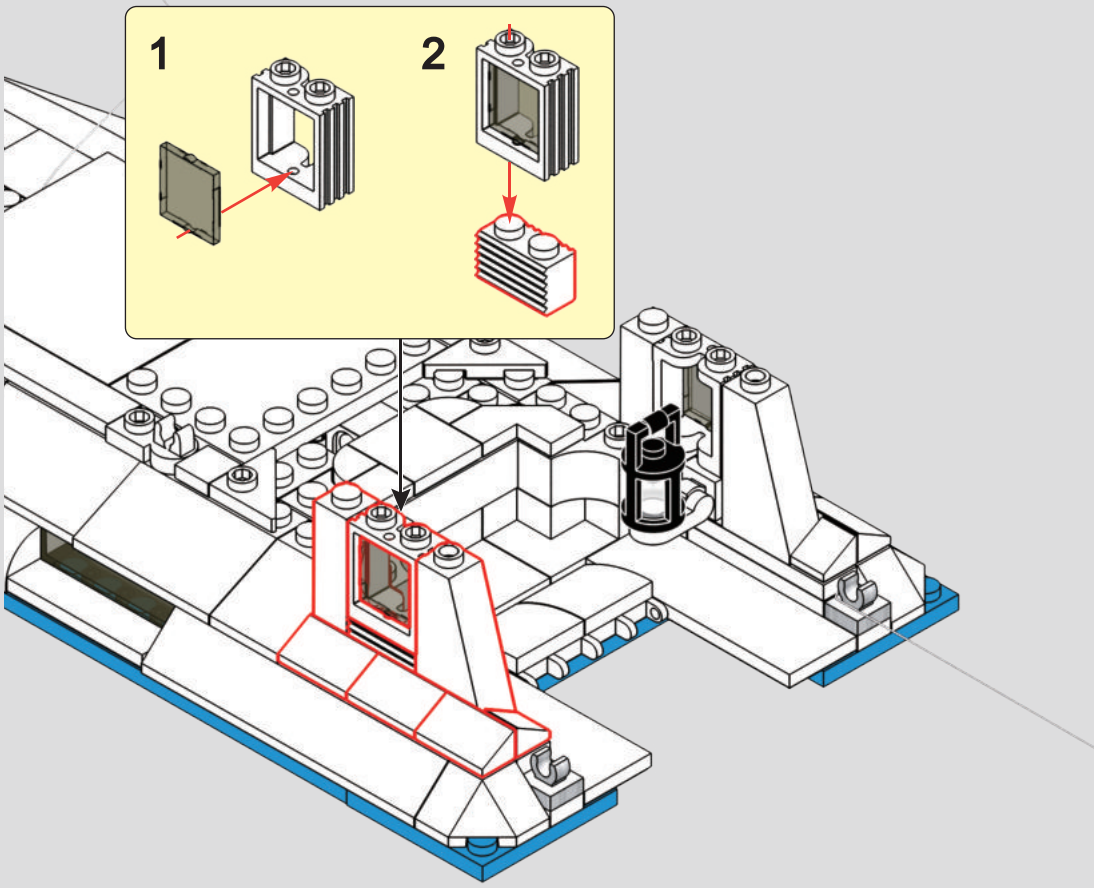

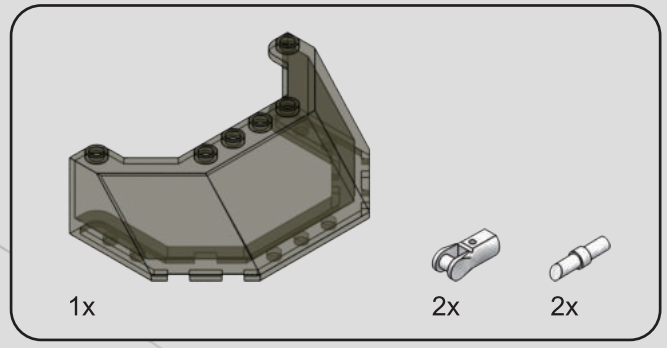

353

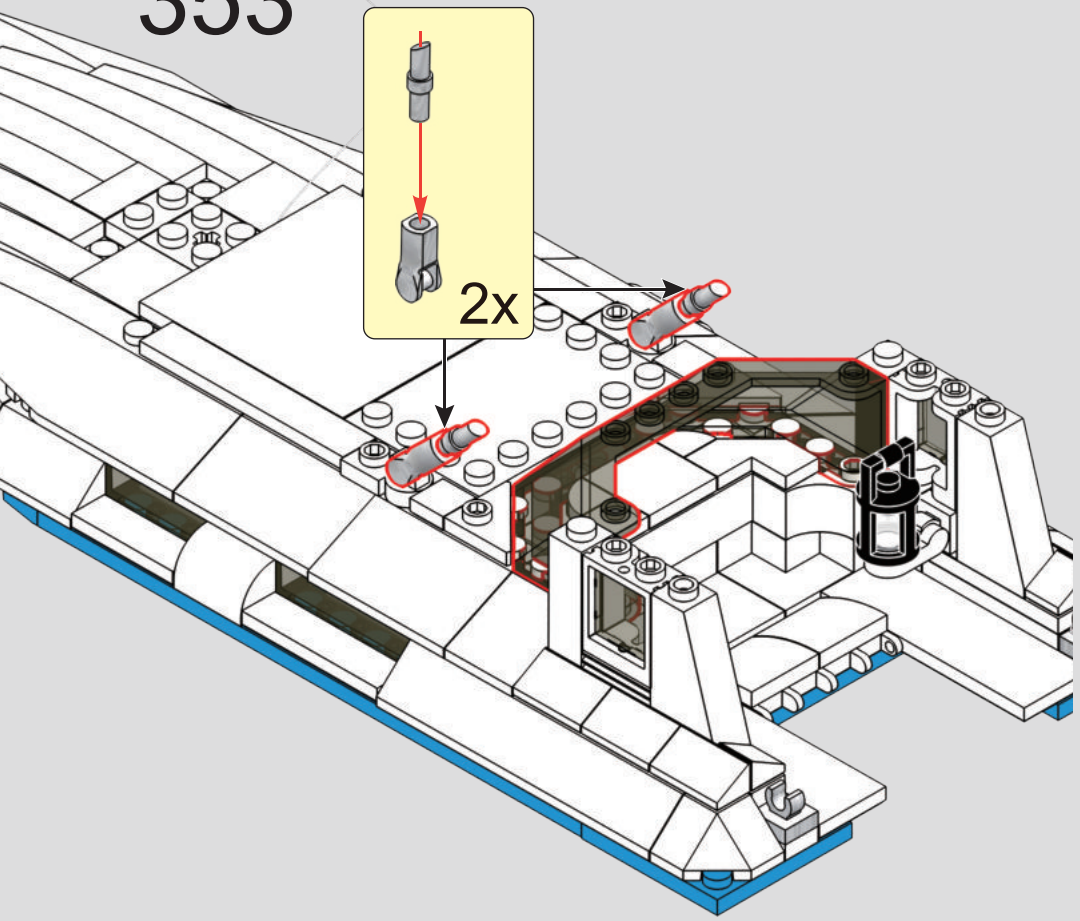

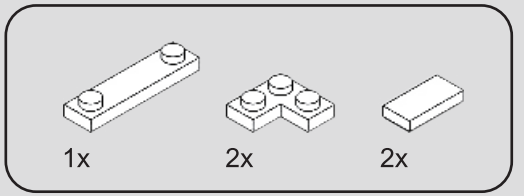

354

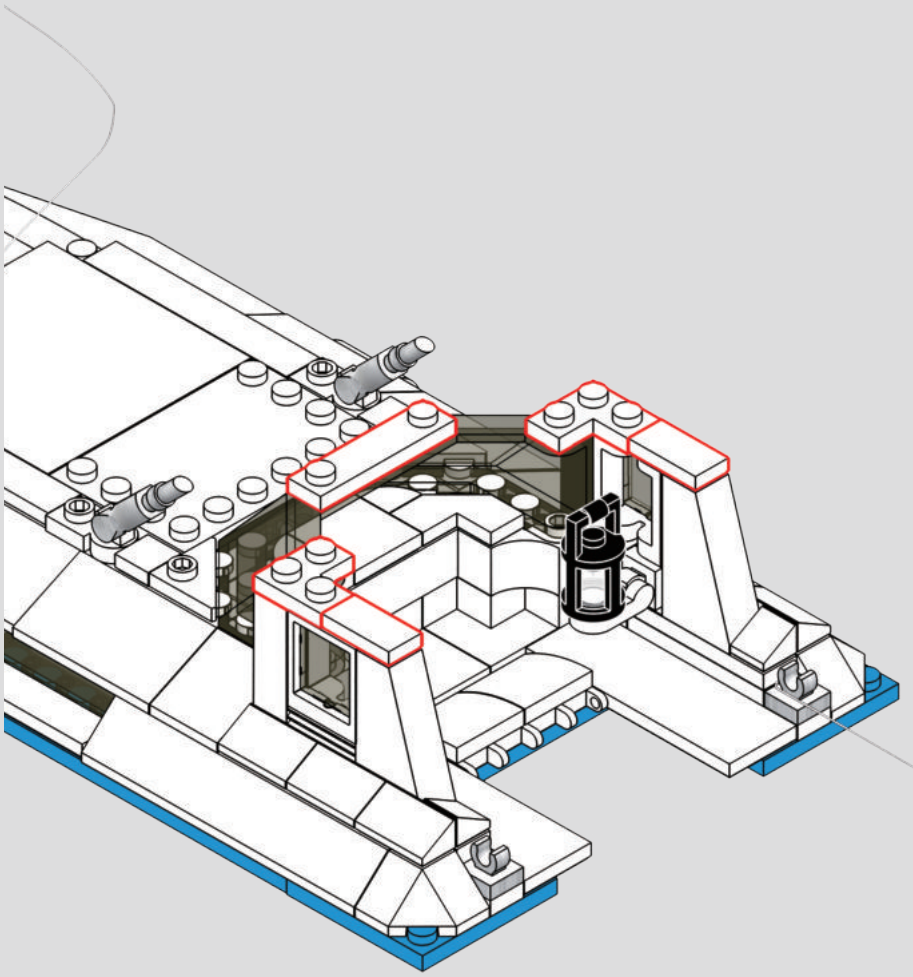

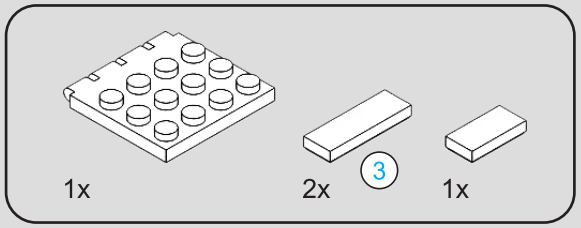

355

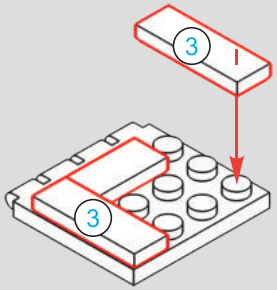

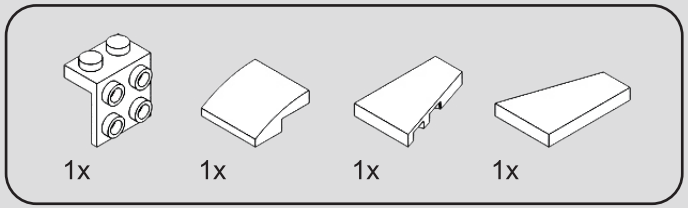

356

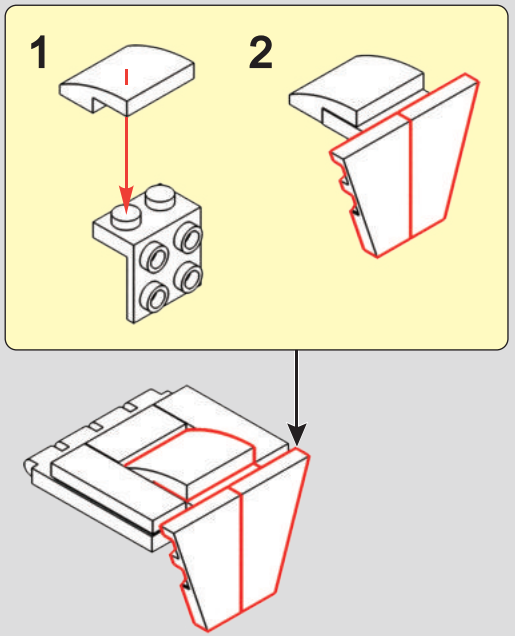

357

1

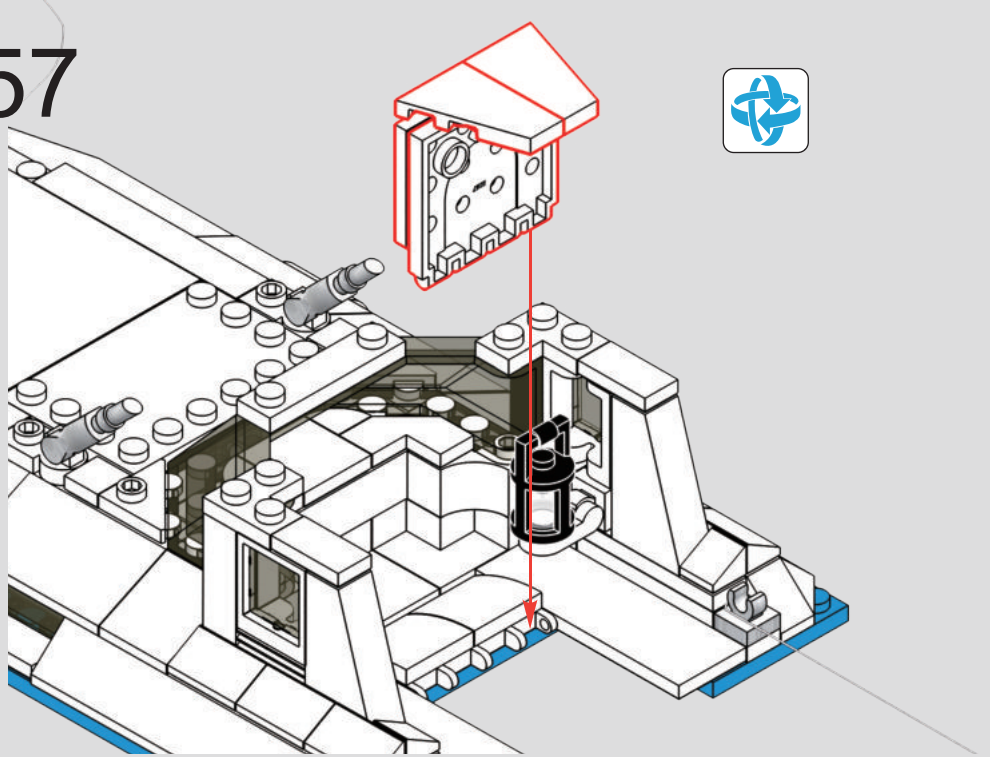

2

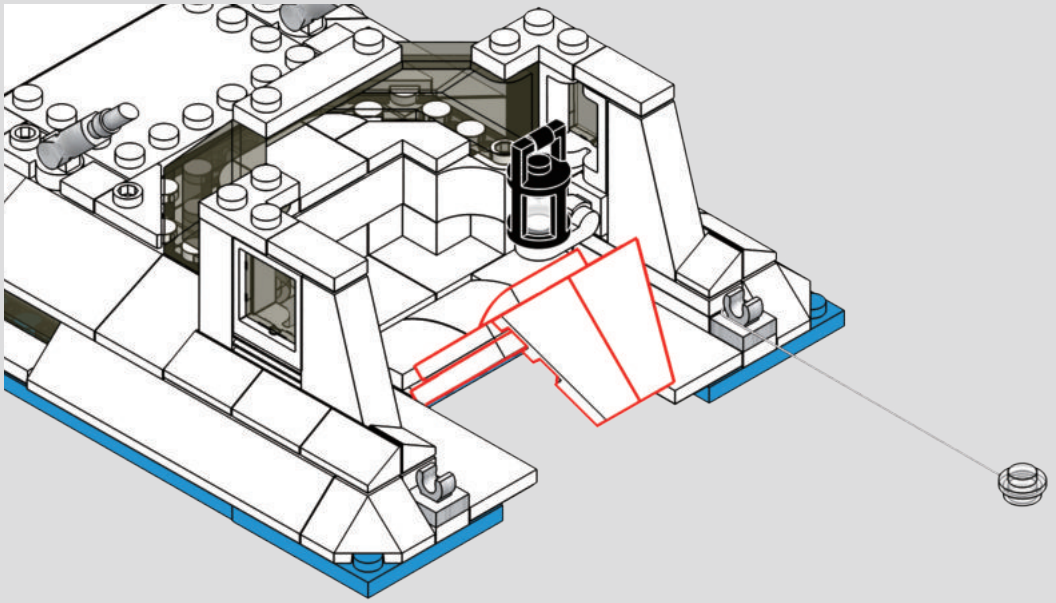

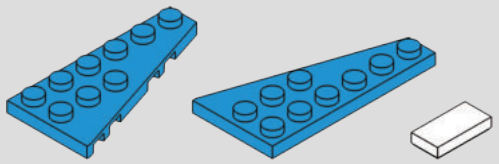

358

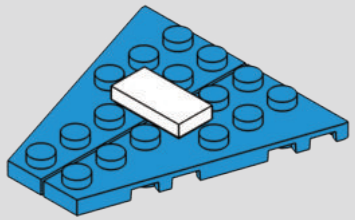

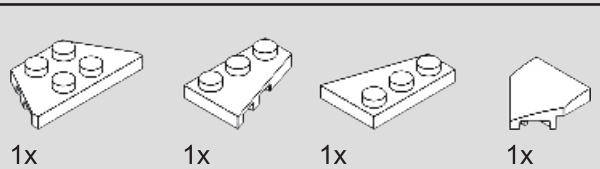

359

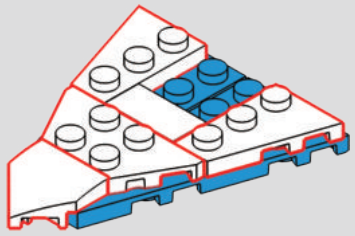

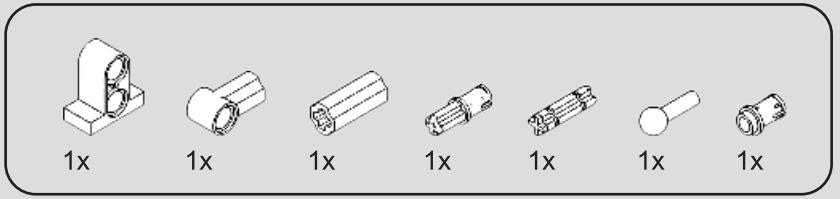

360

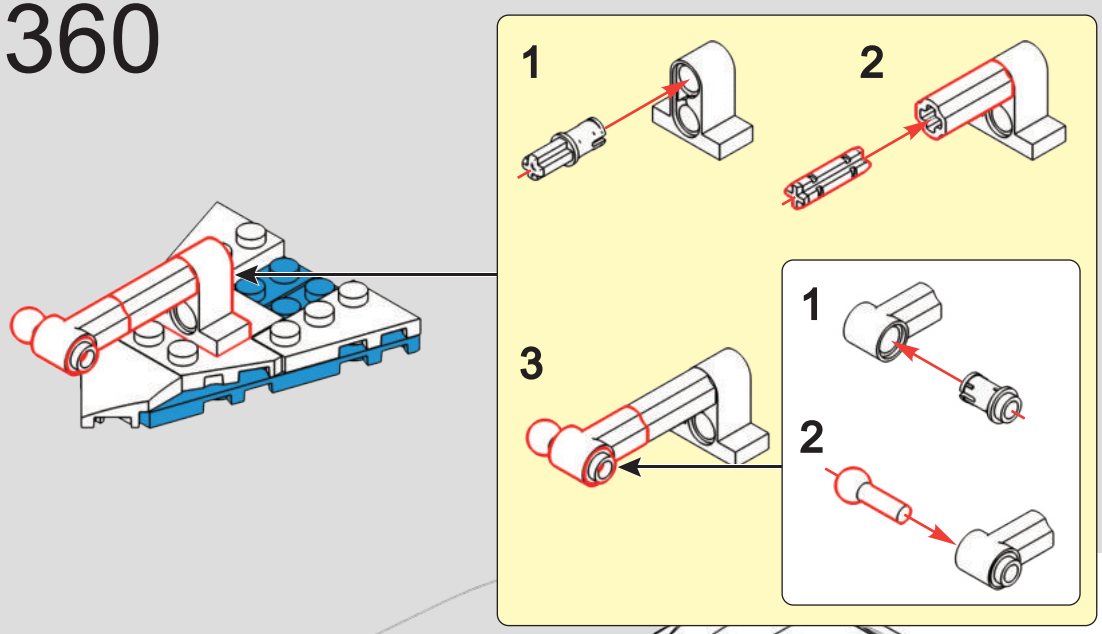

361

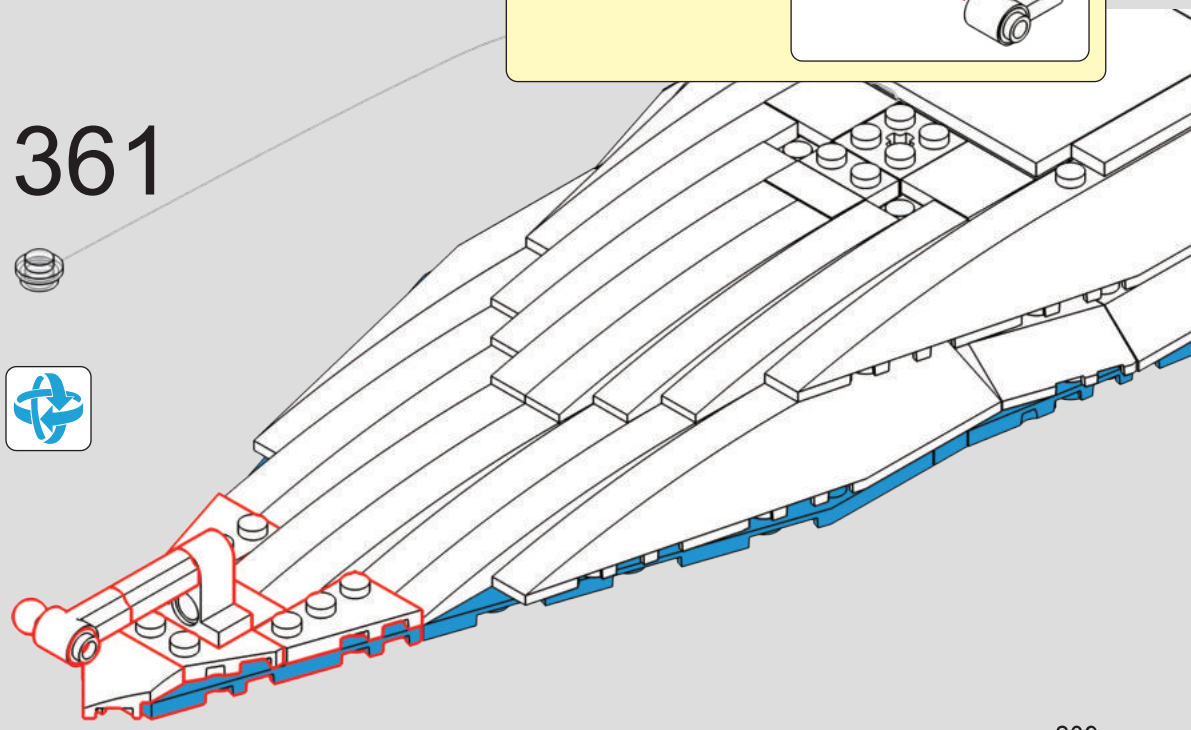


8


F


La Brisa

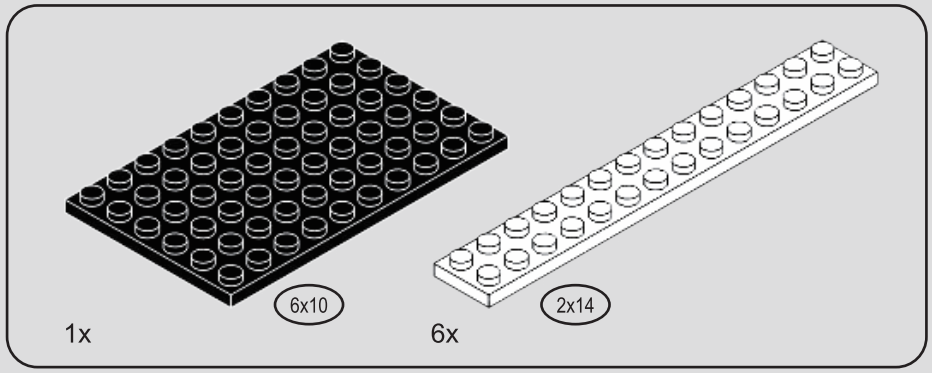

362

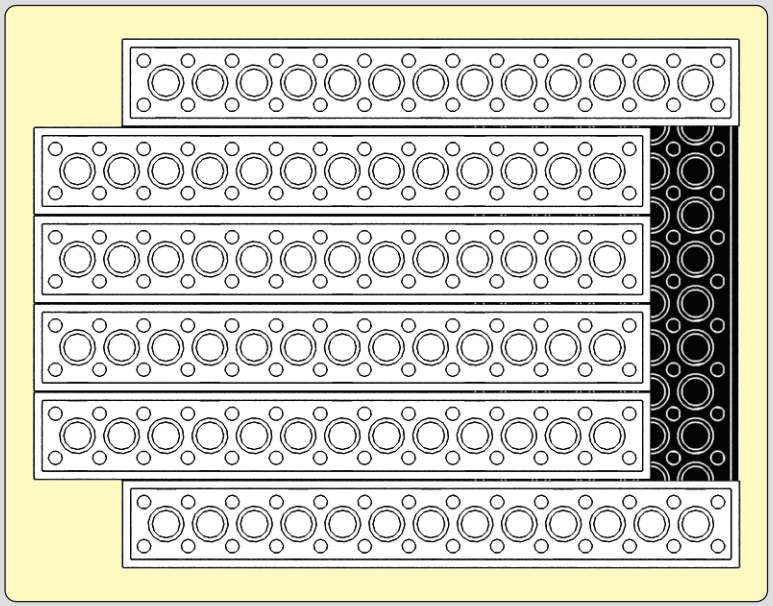

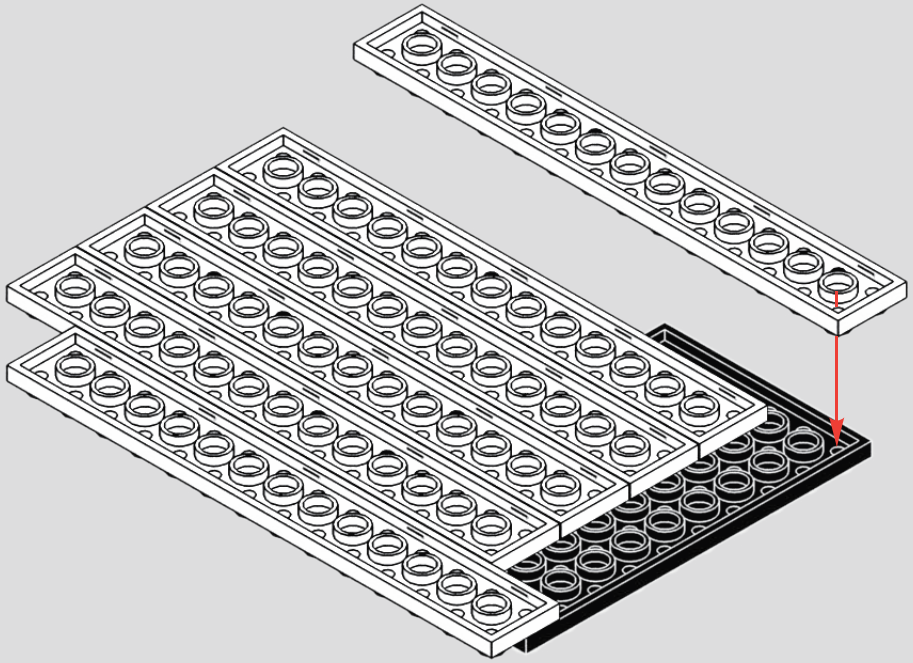

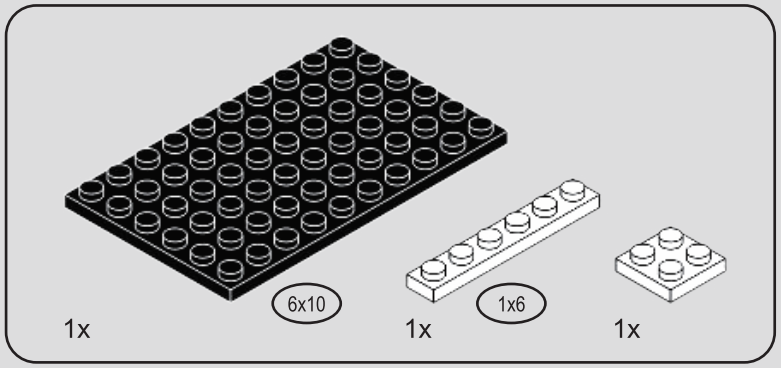

363

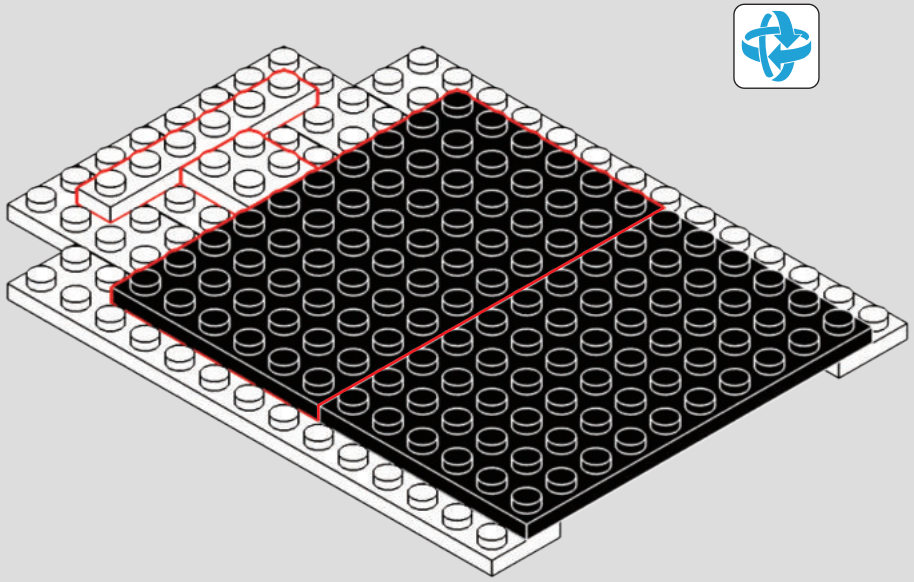

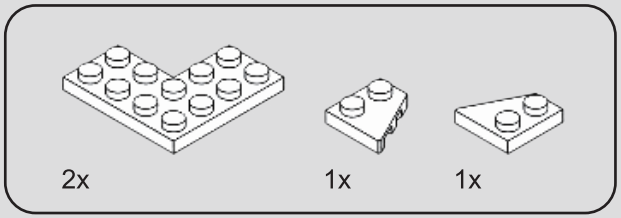

364

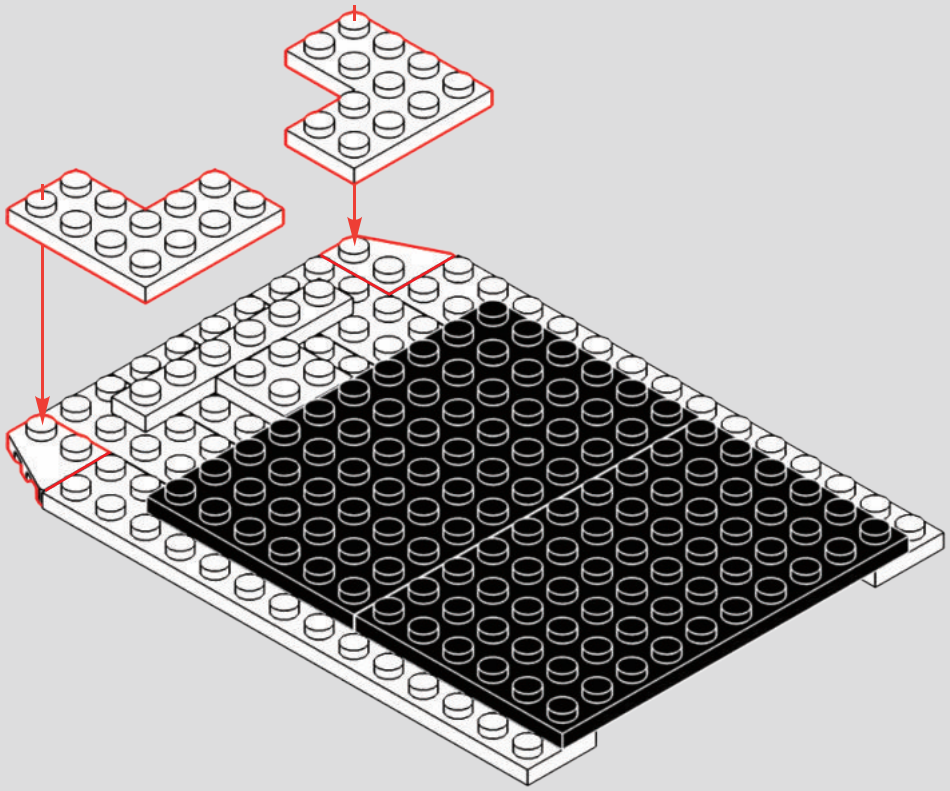

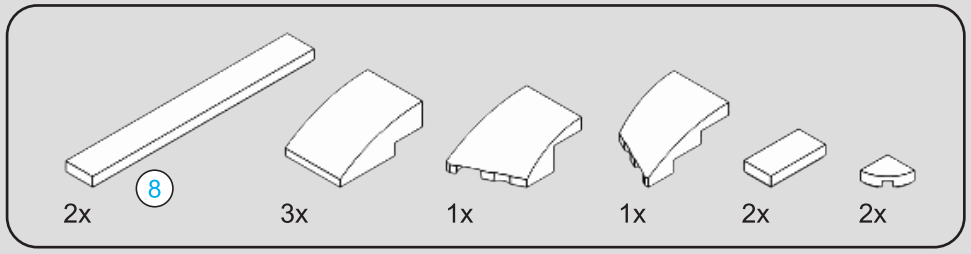

365

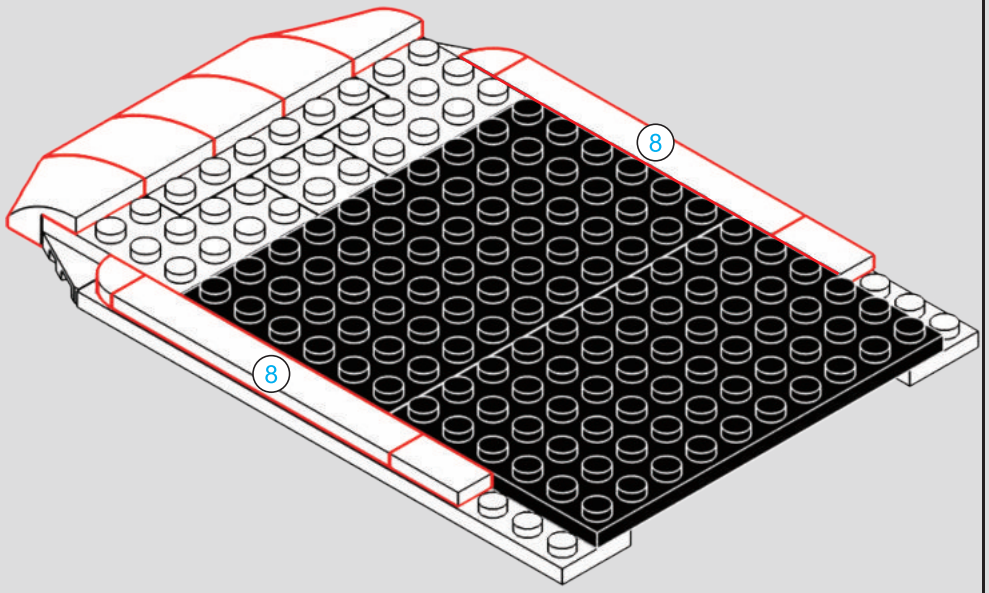

8 1:1

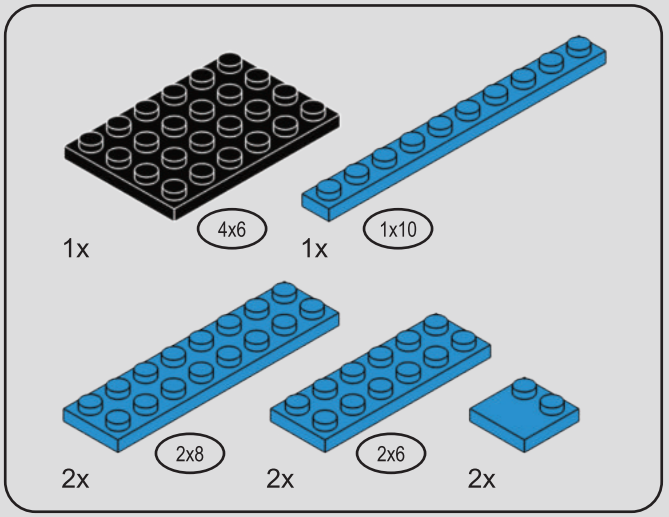

366

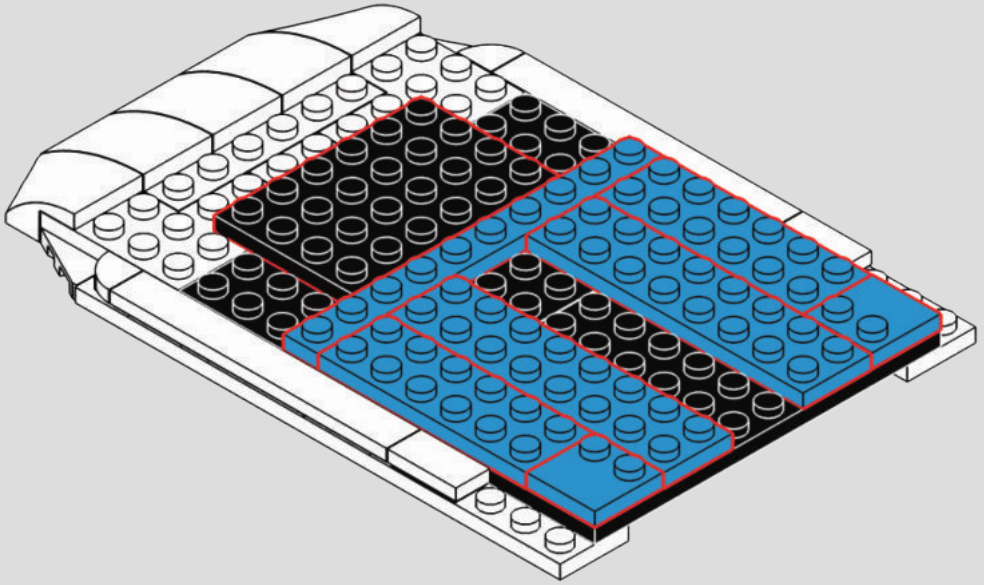

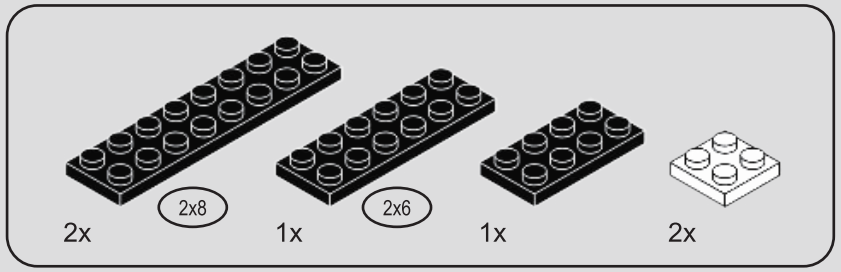

367

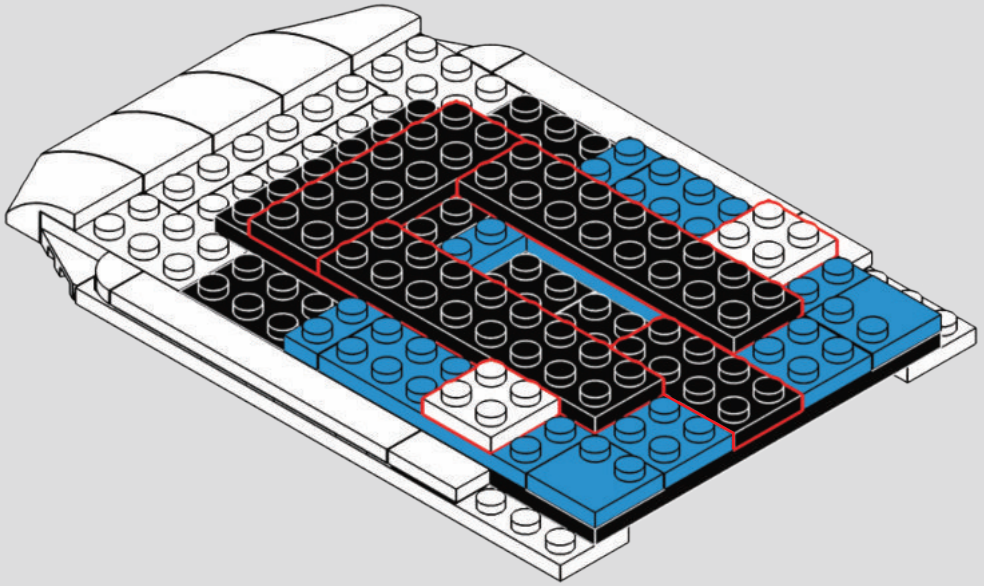

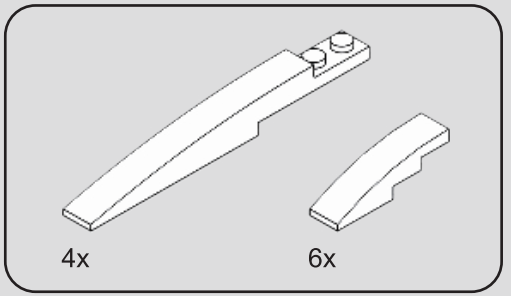

368

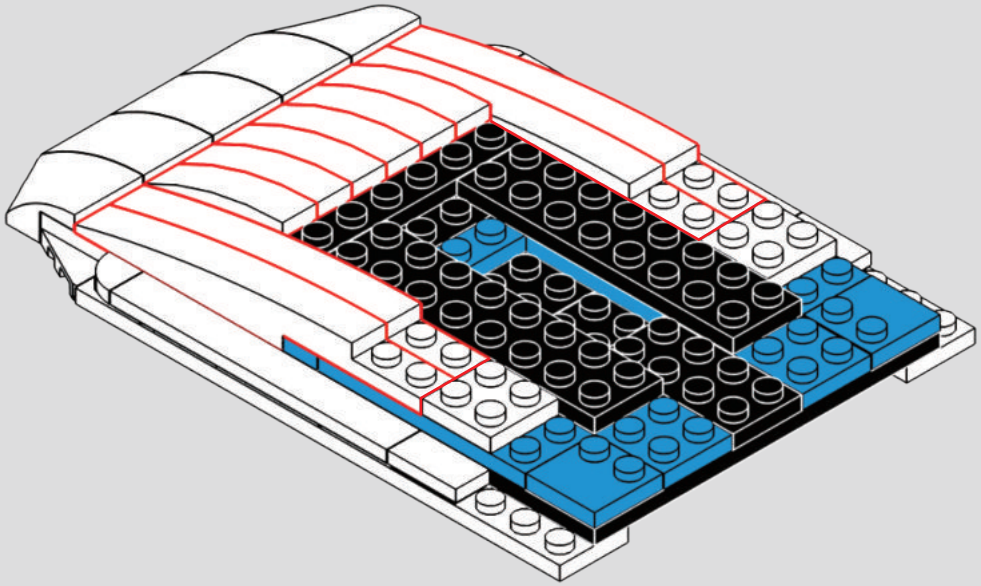

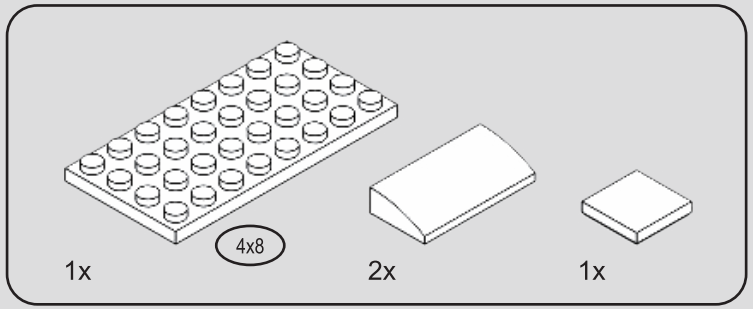

369

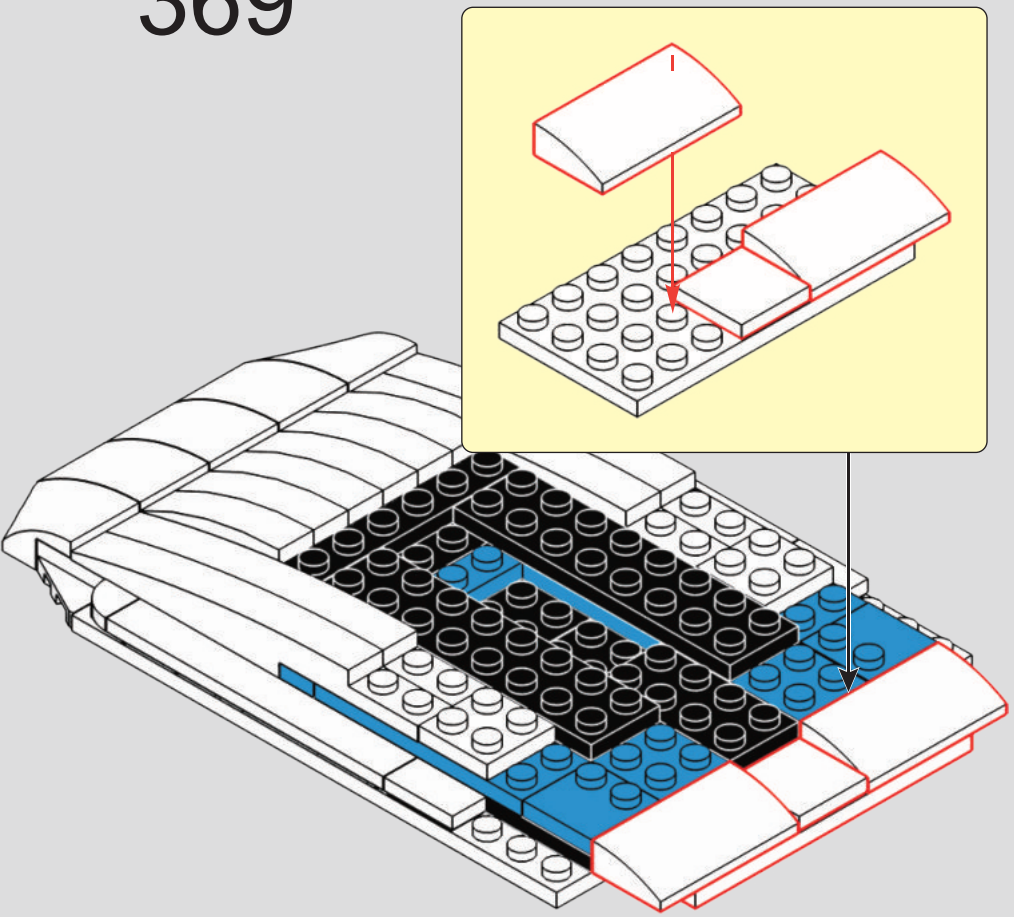

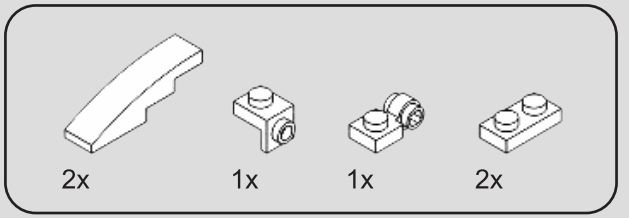

370

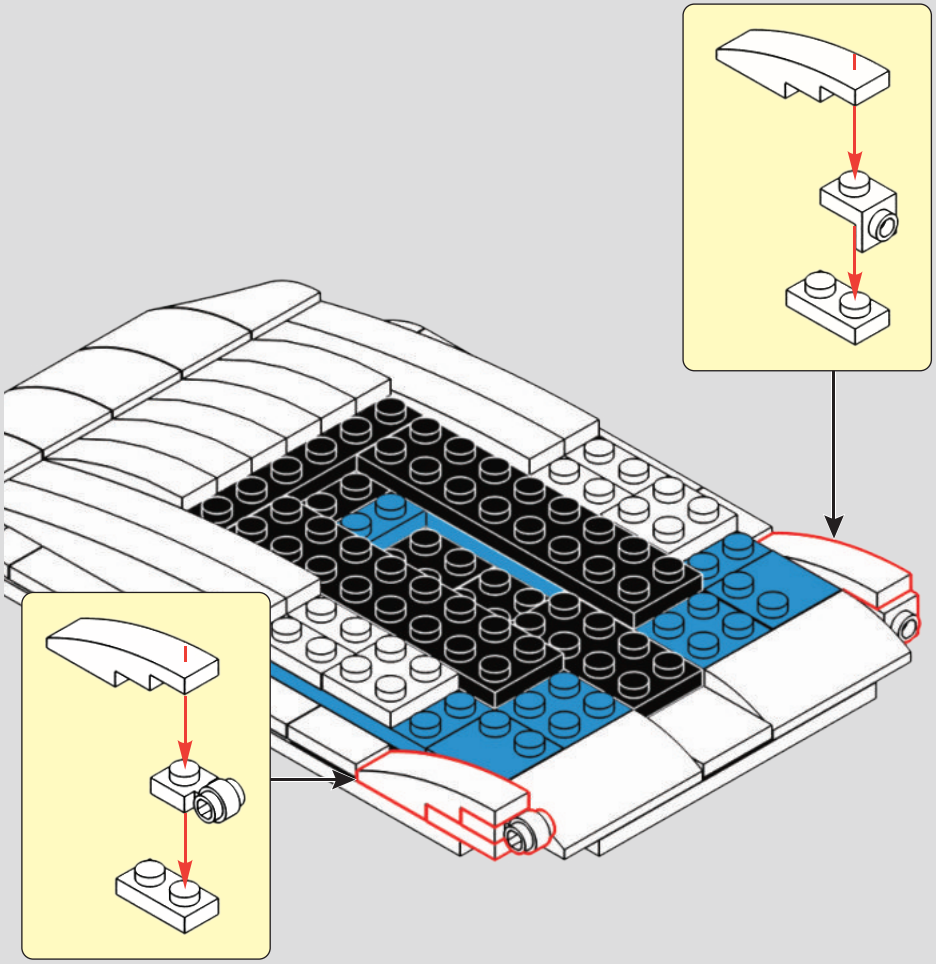

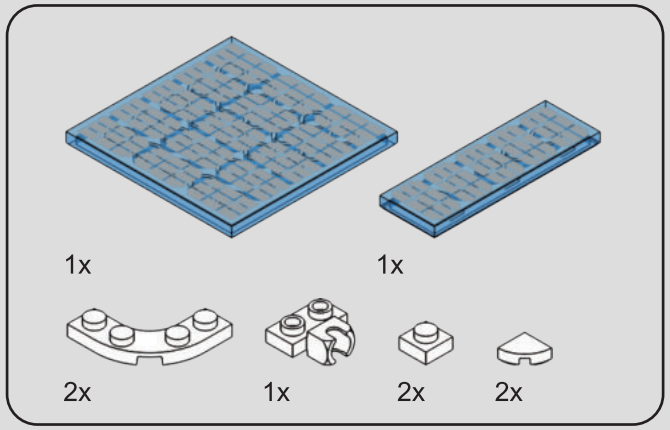

371

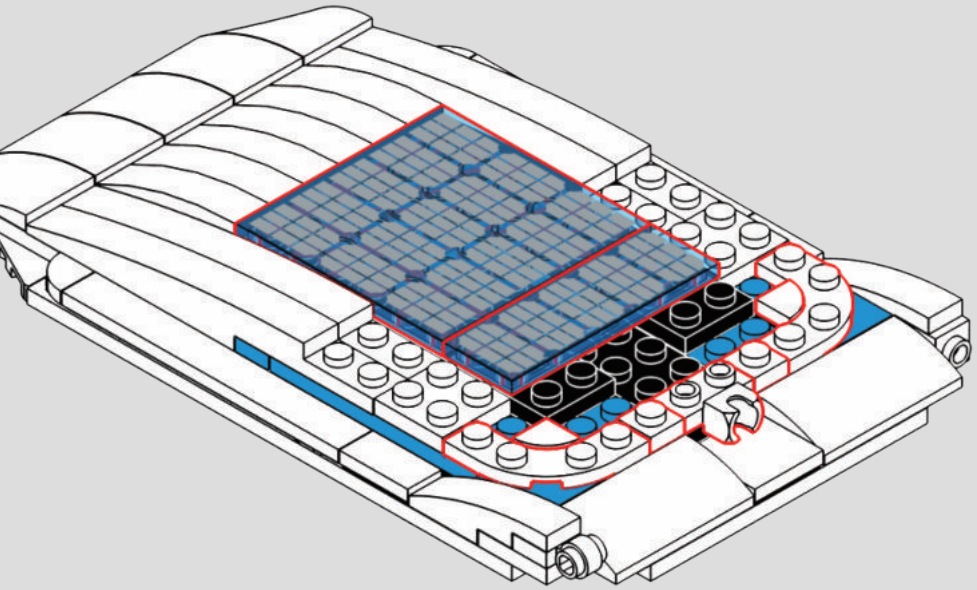

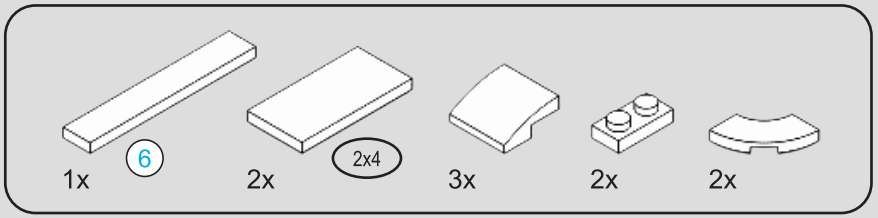

372

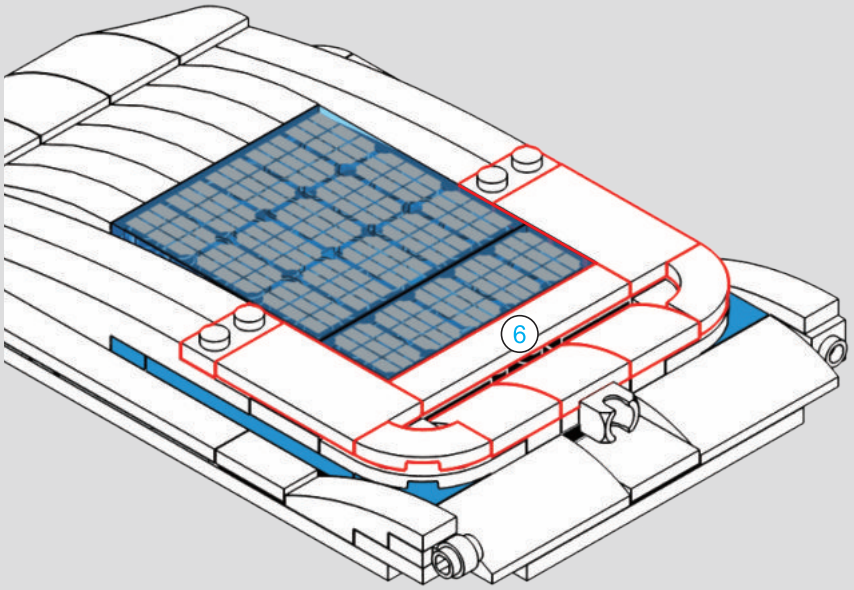

6 1:1

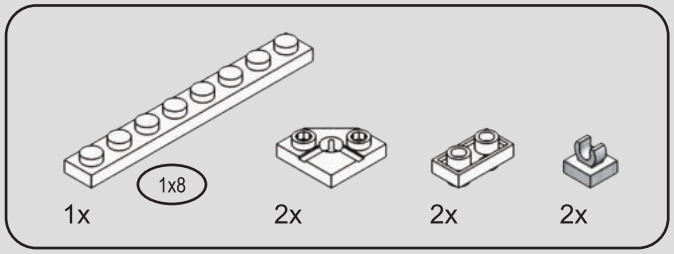

373

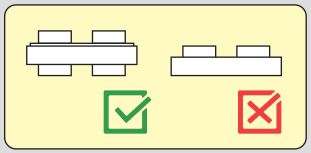

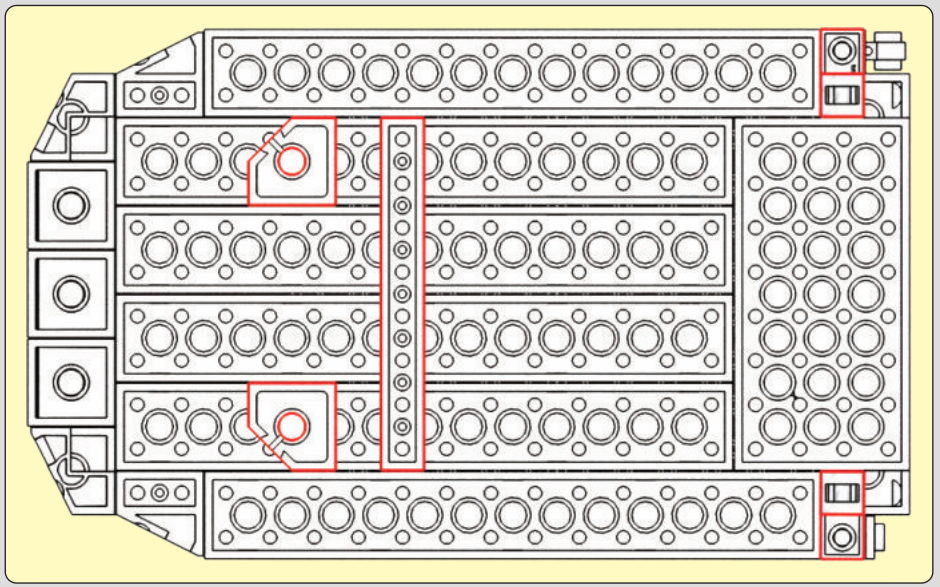

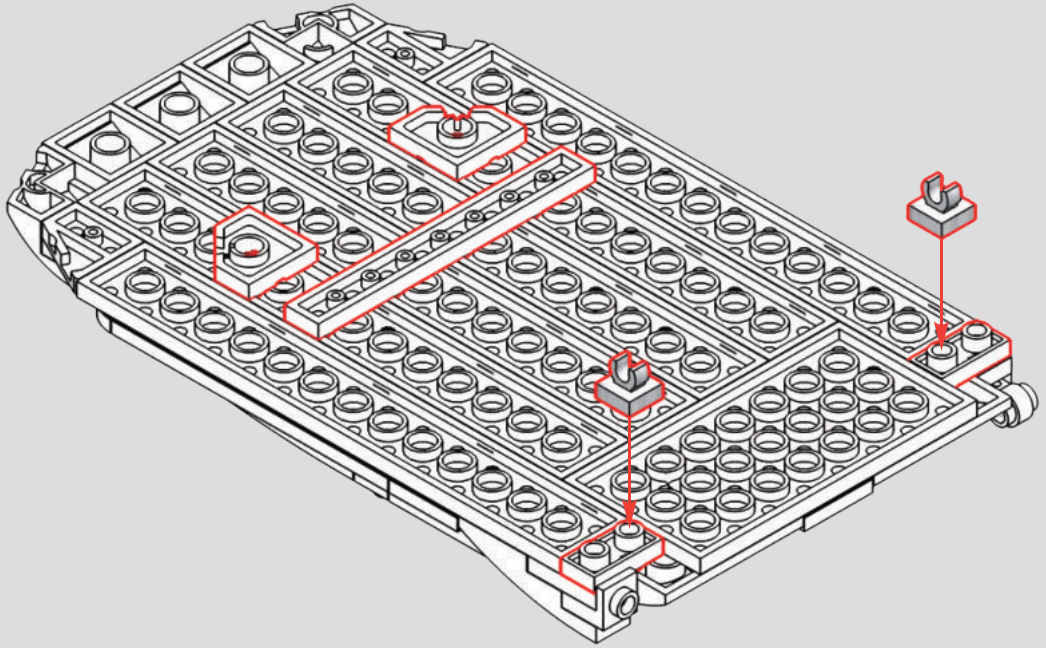

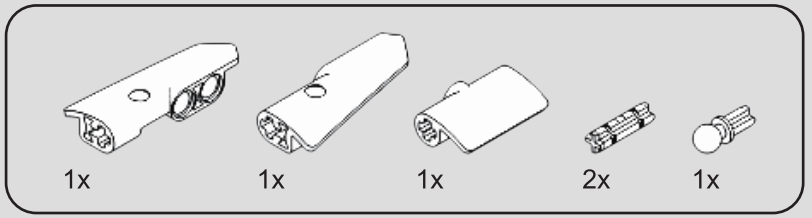

374

1

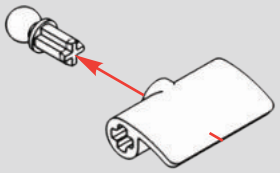

2

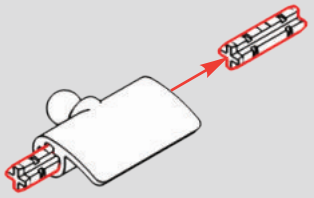

3

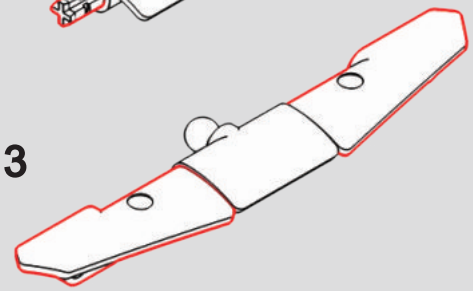

375

1

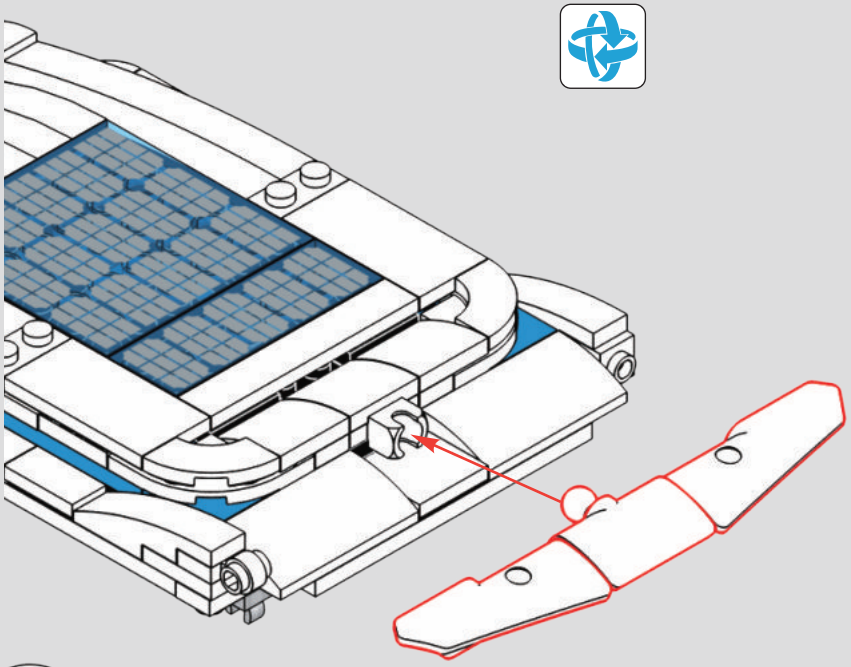

2

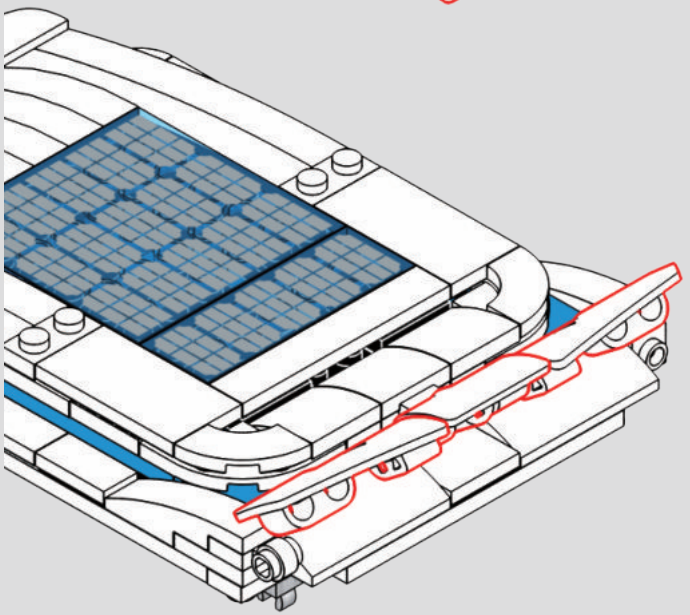

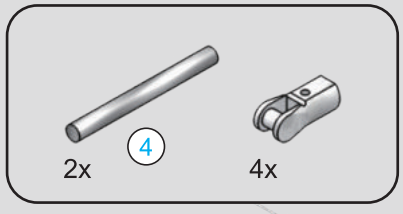

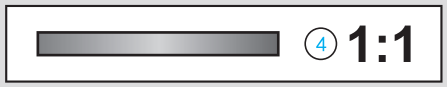

376

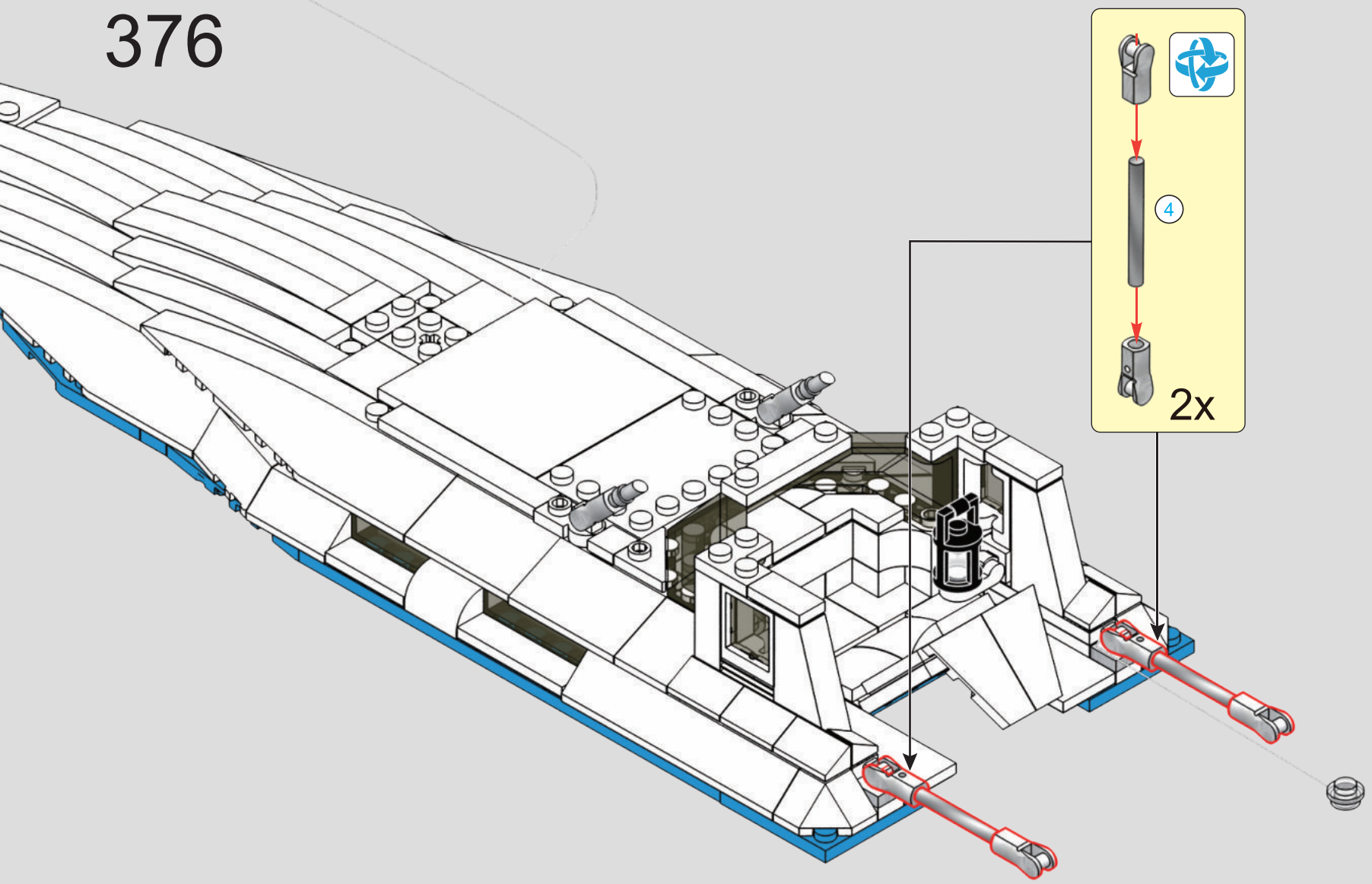

377

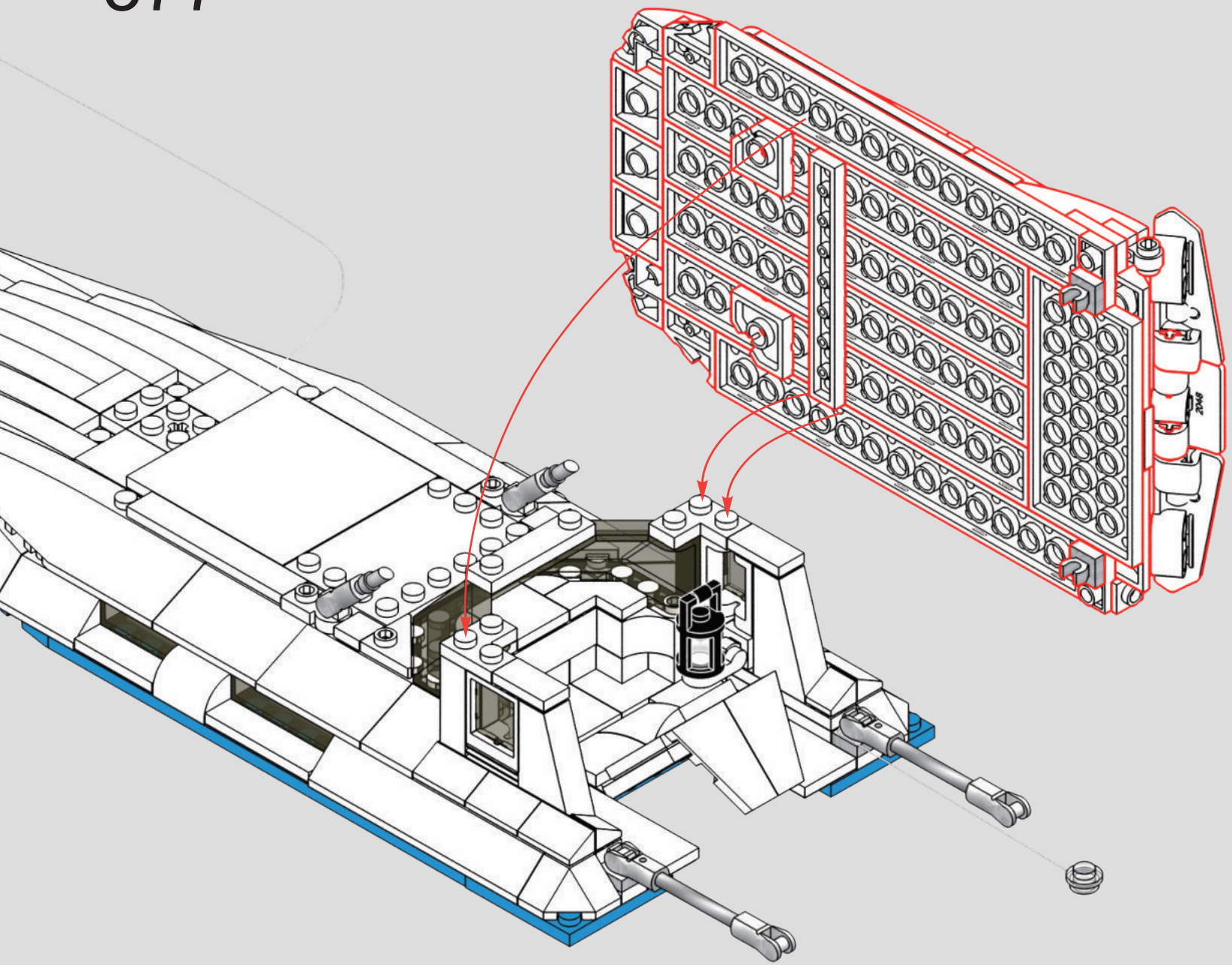

378

1

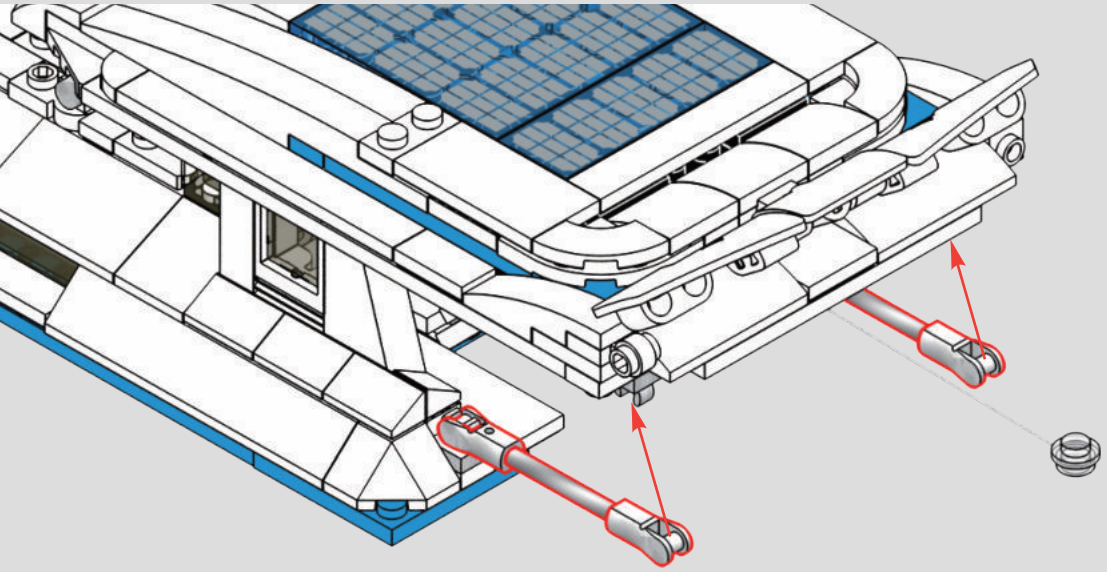

2

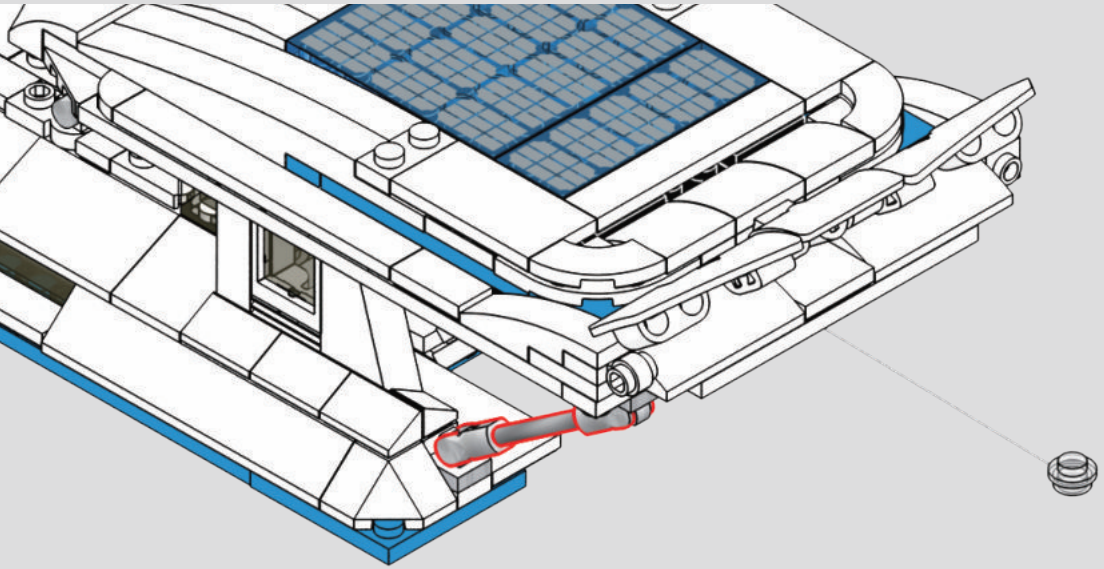

379

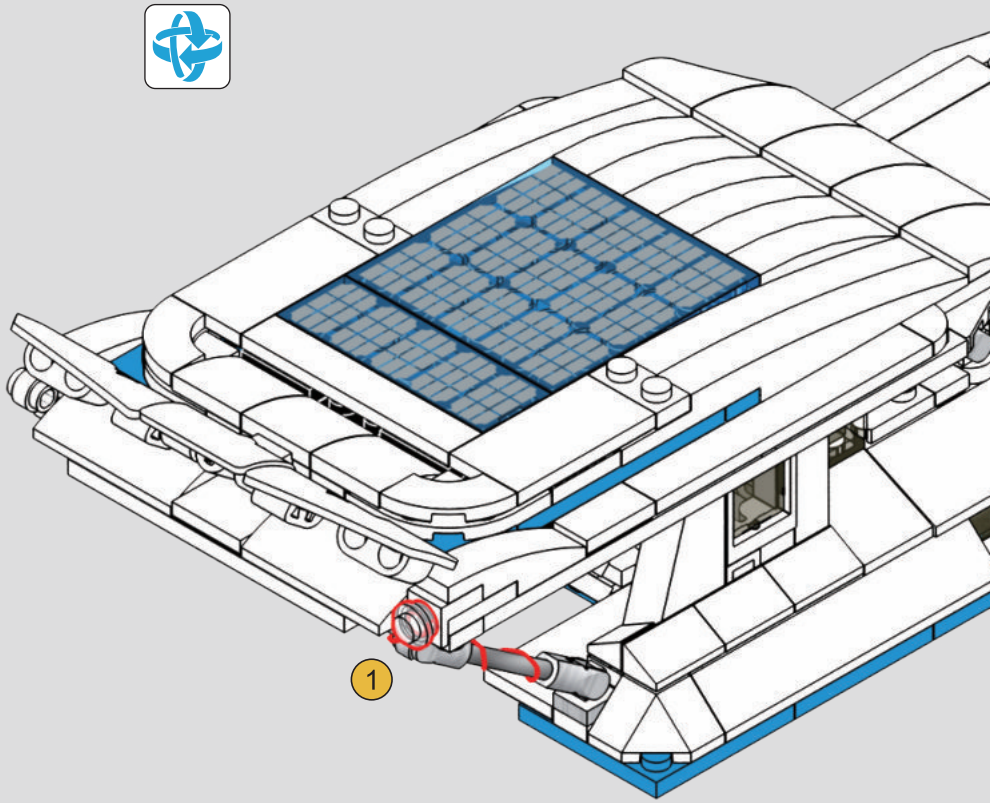

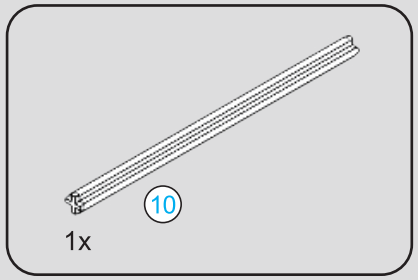

380

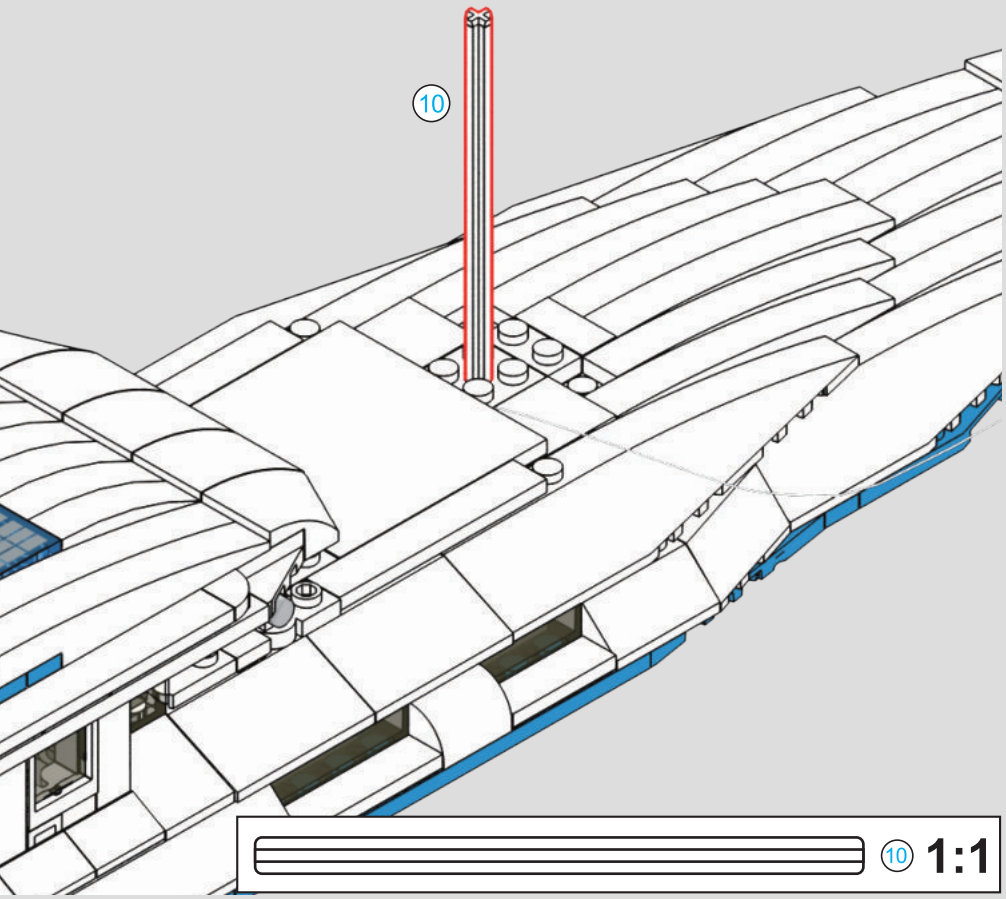

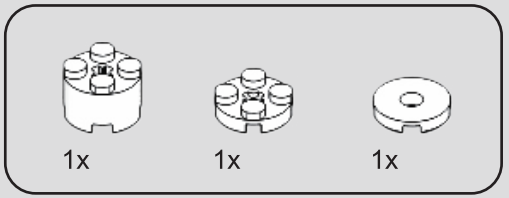

381

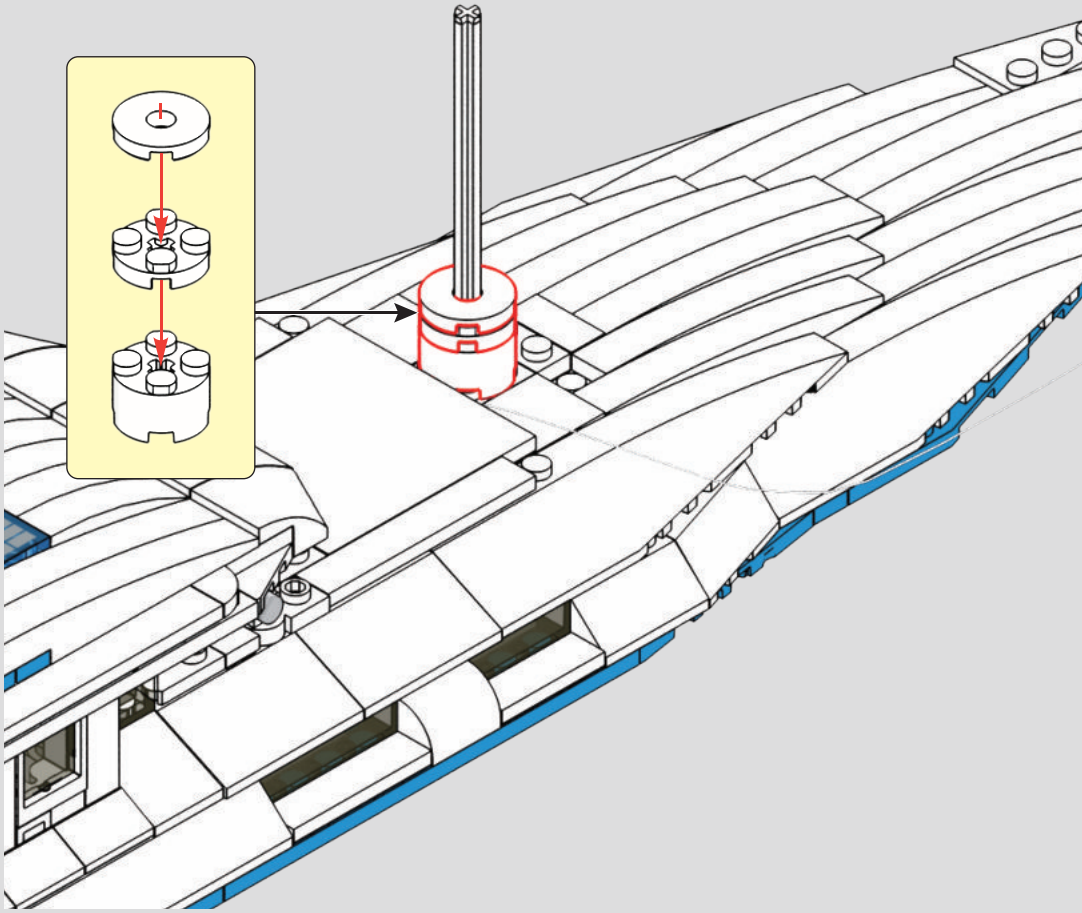

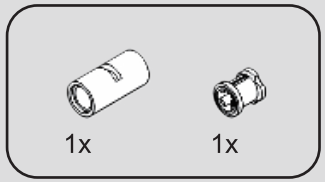

382

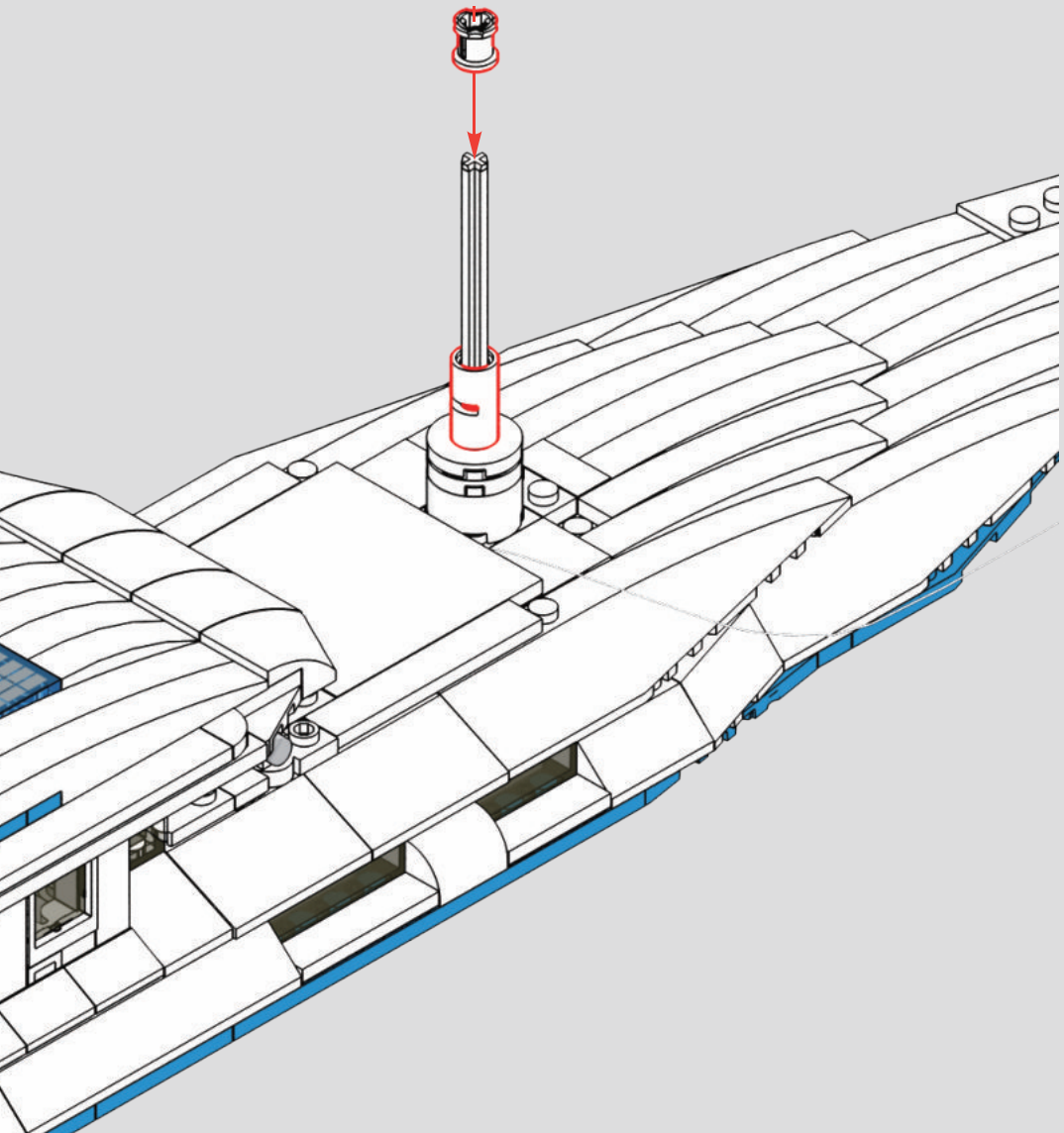

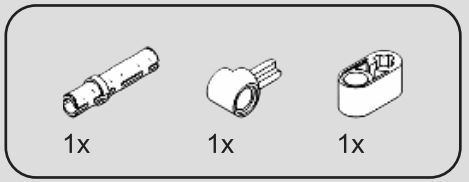

383

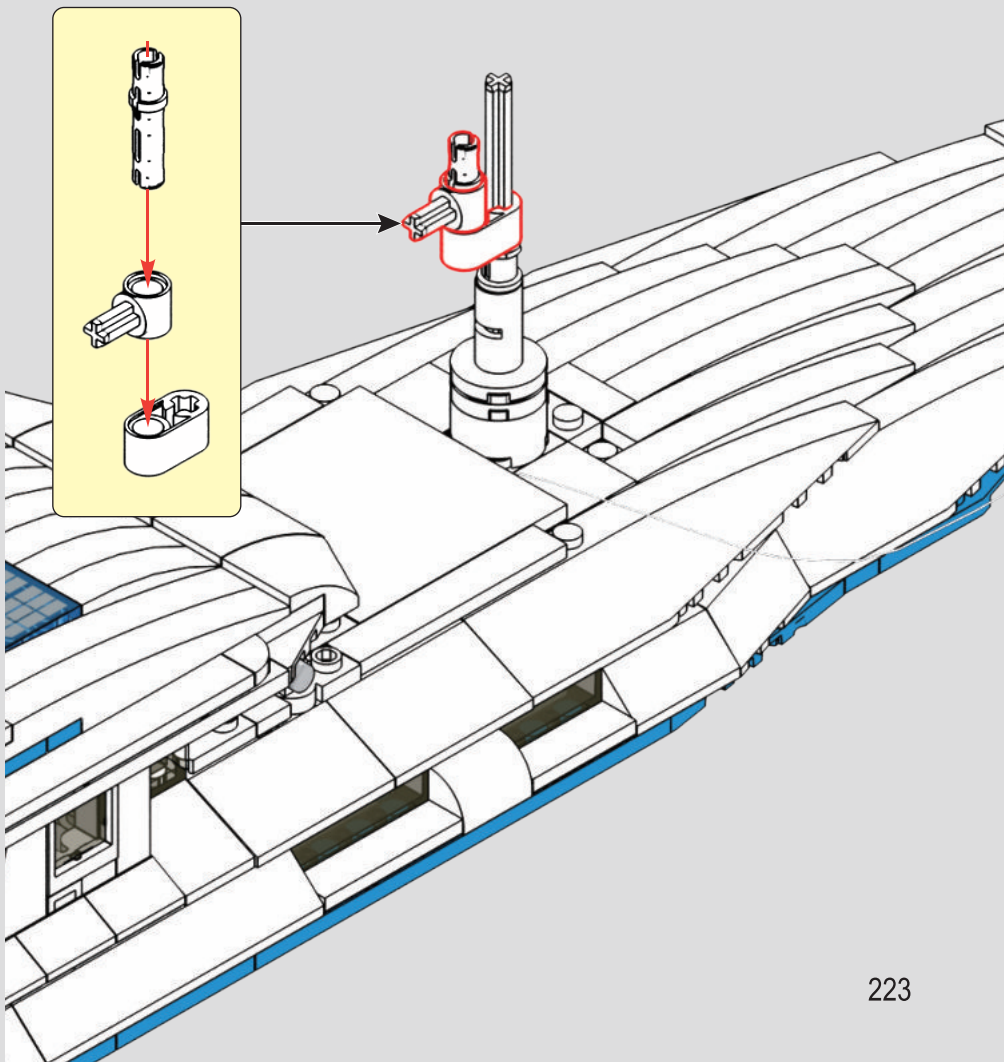

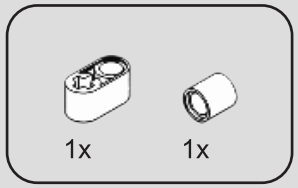

384

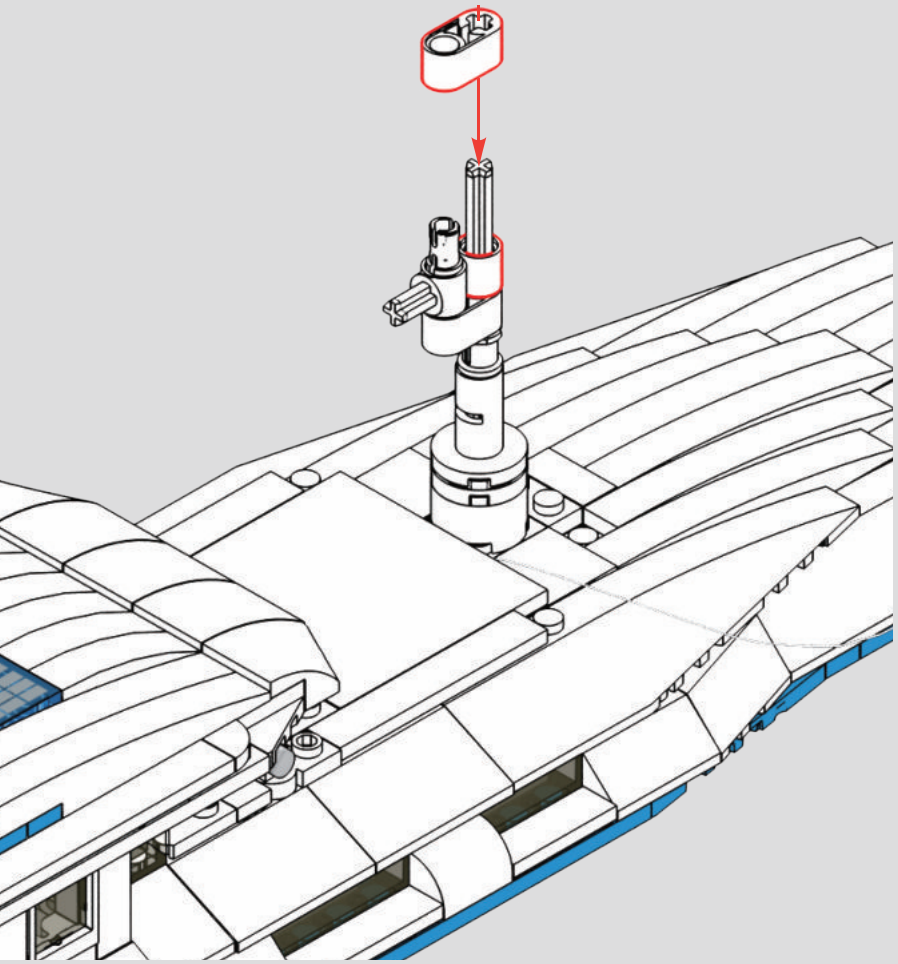

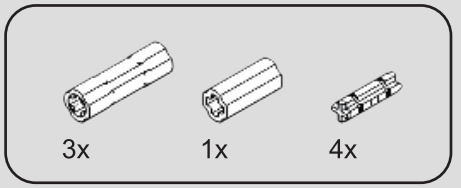

385

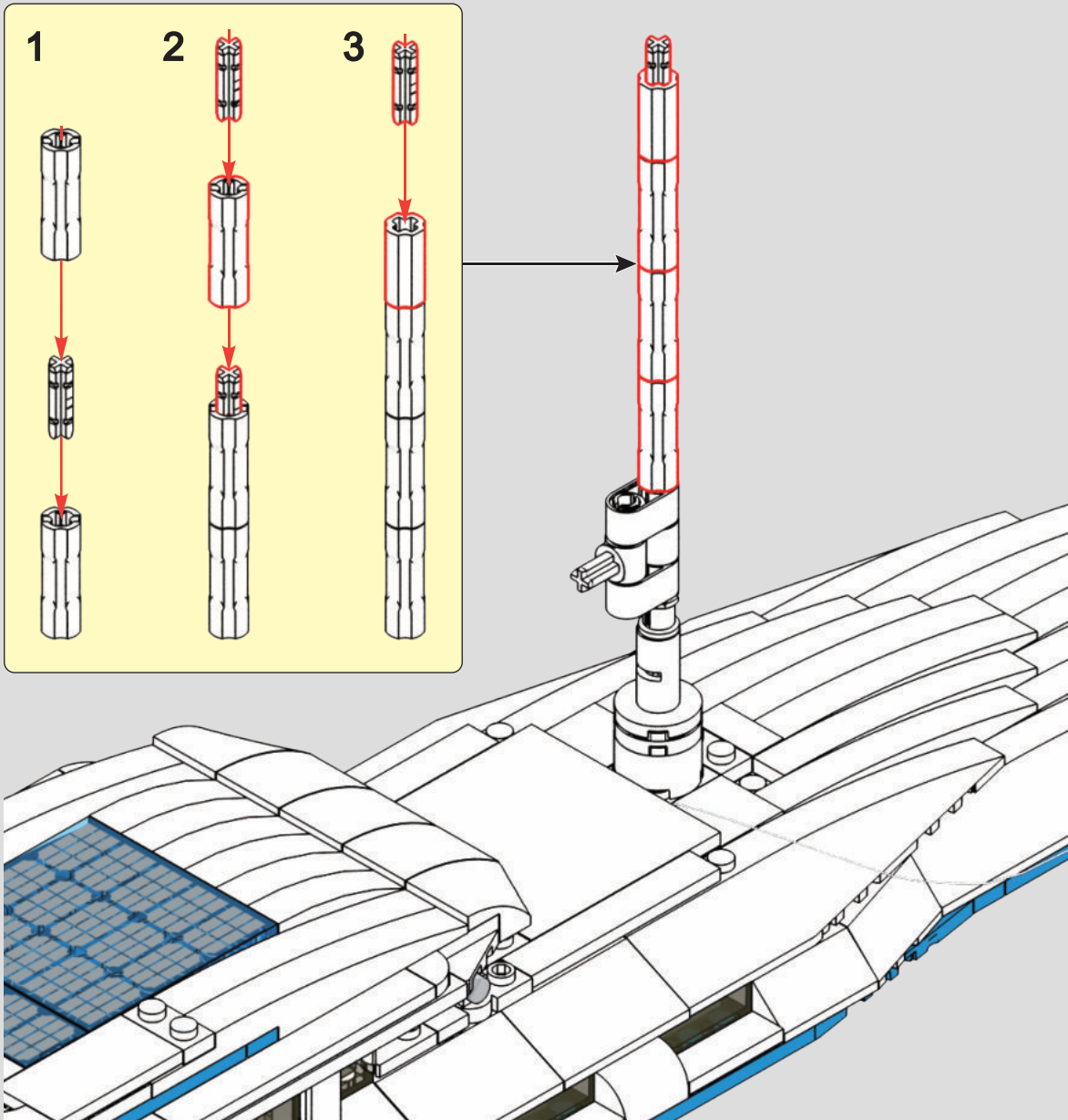

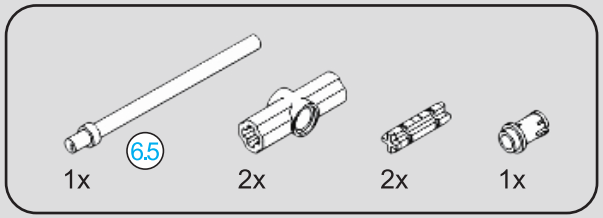

386

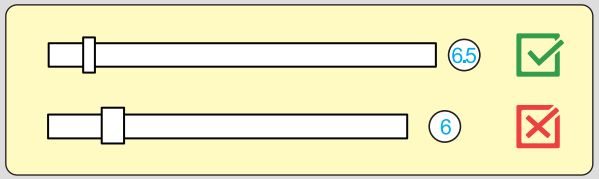

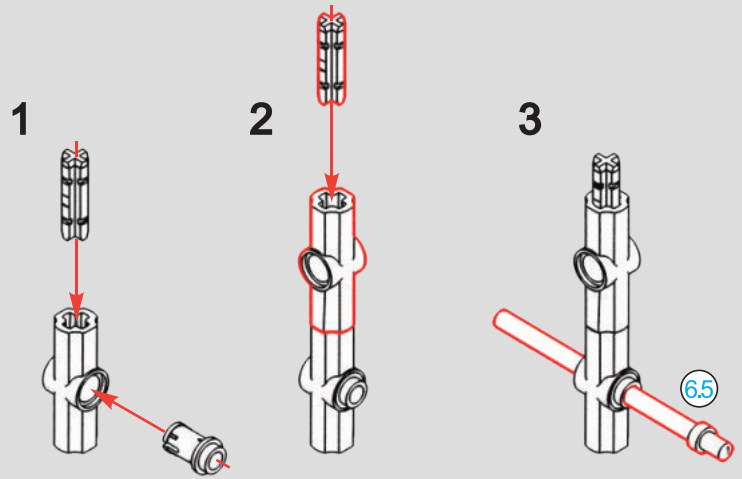

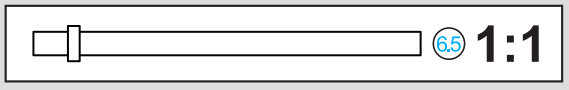

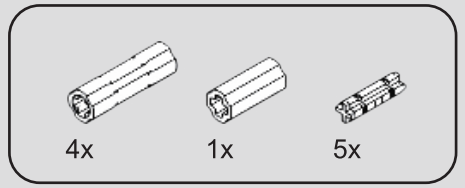

387

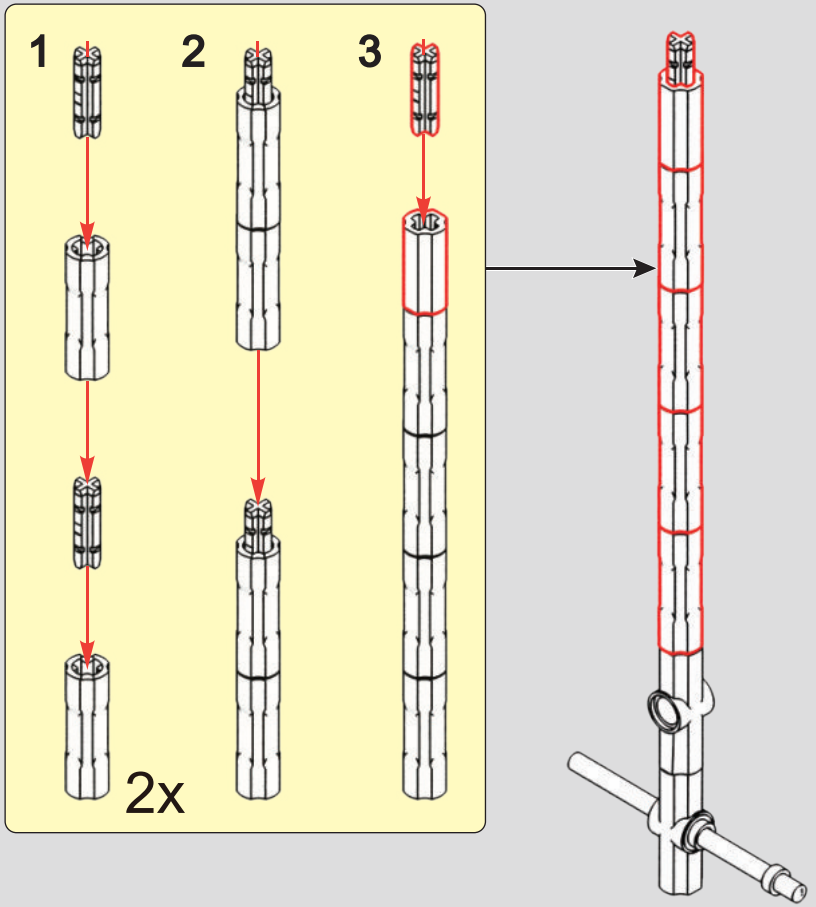

388

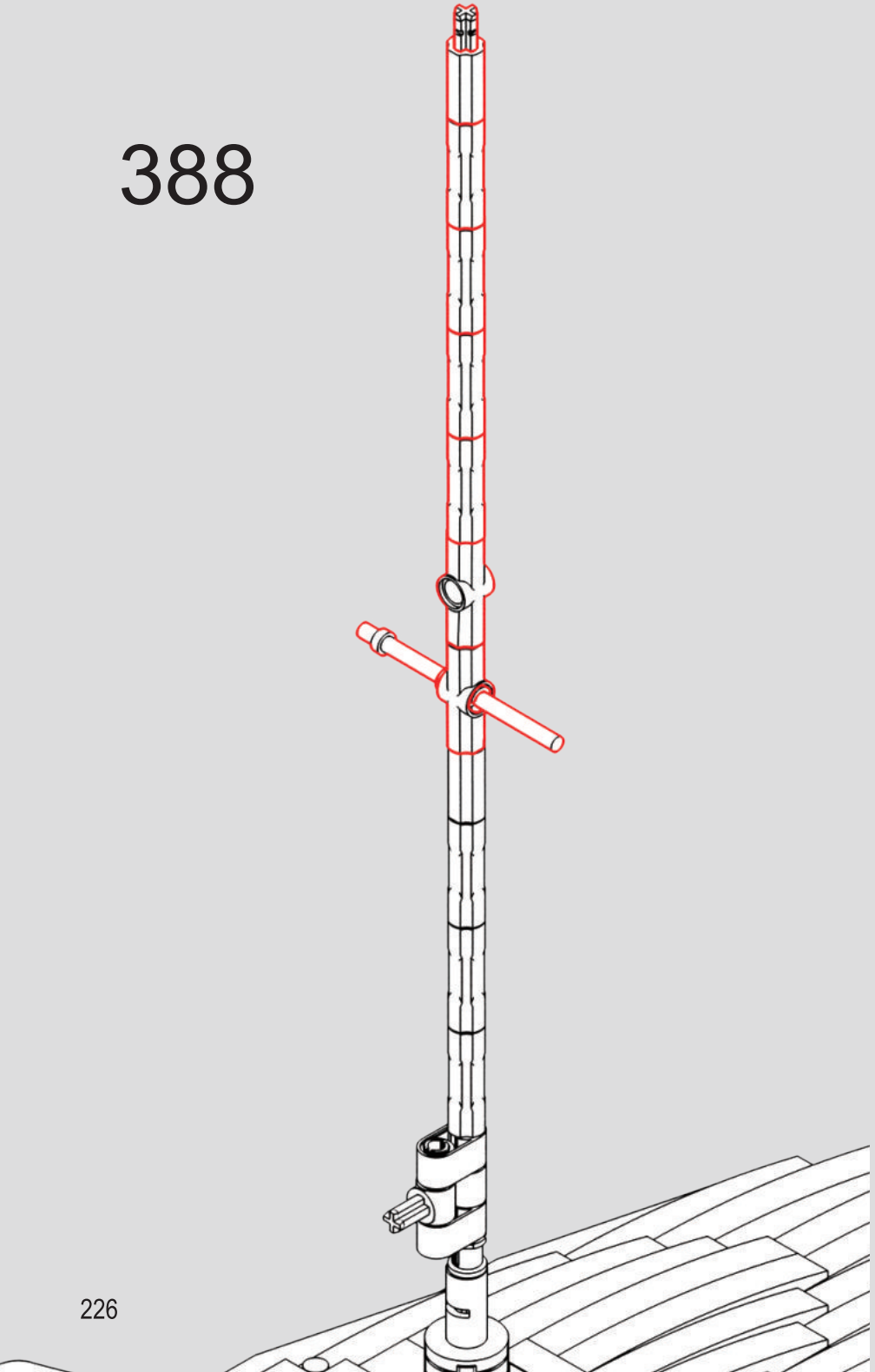

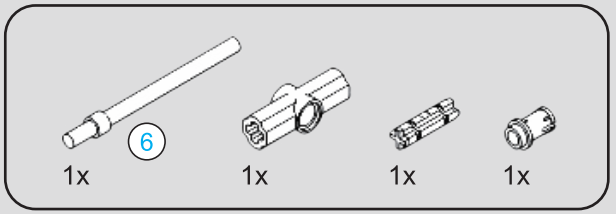

389

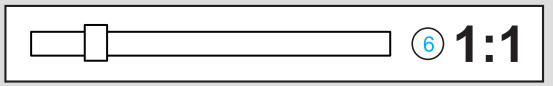

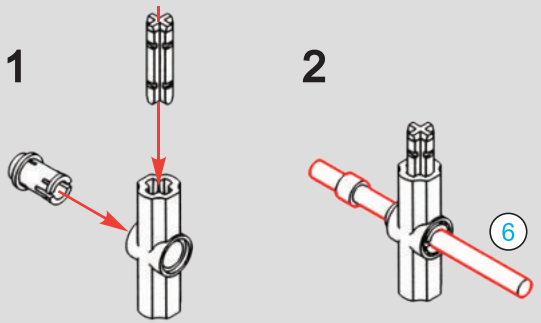

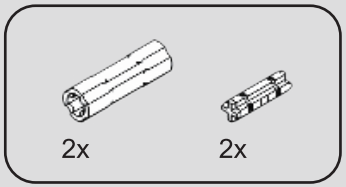

390

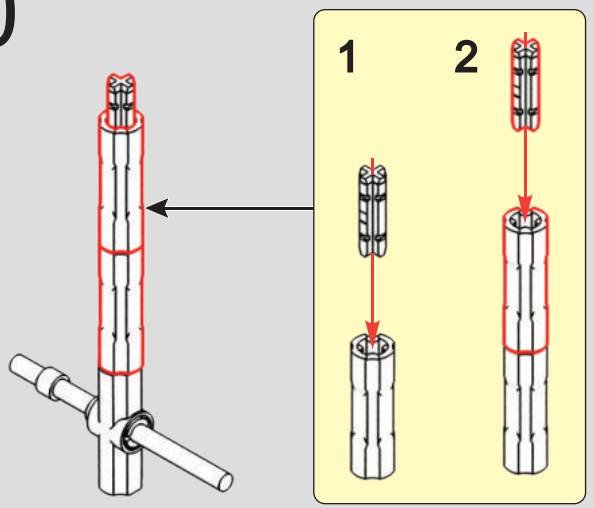

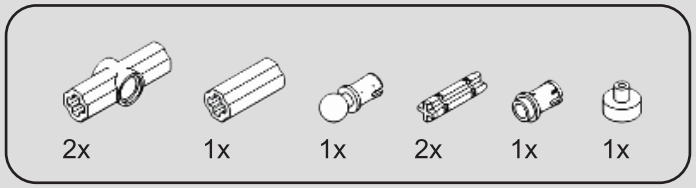

391

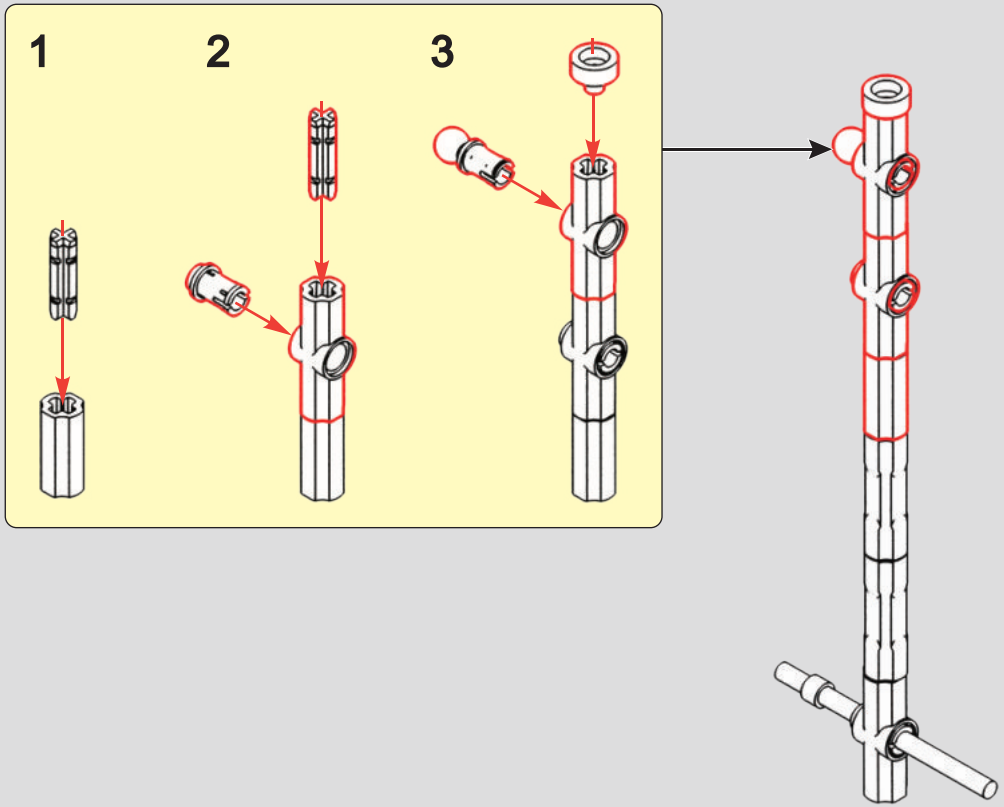

392

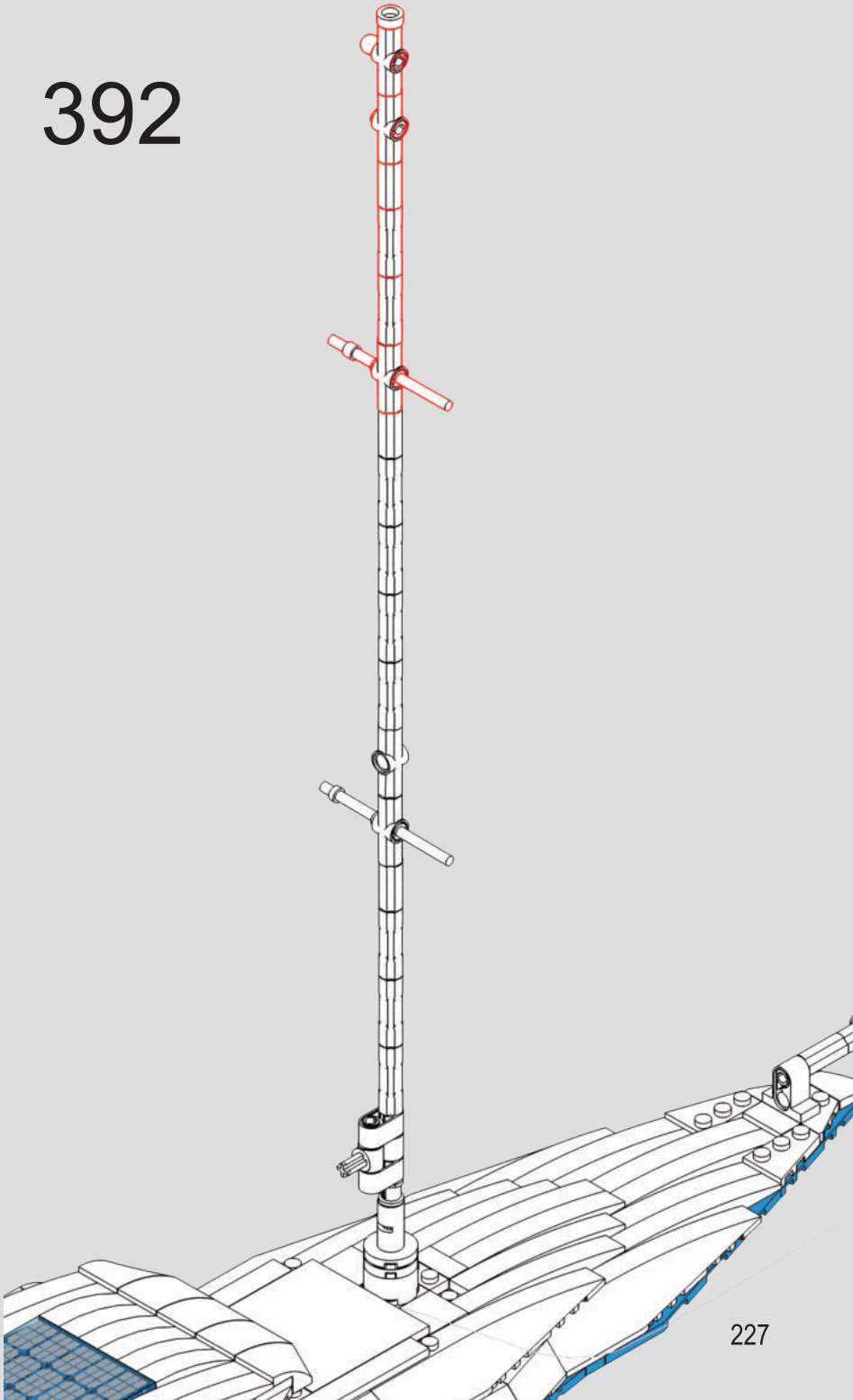

393

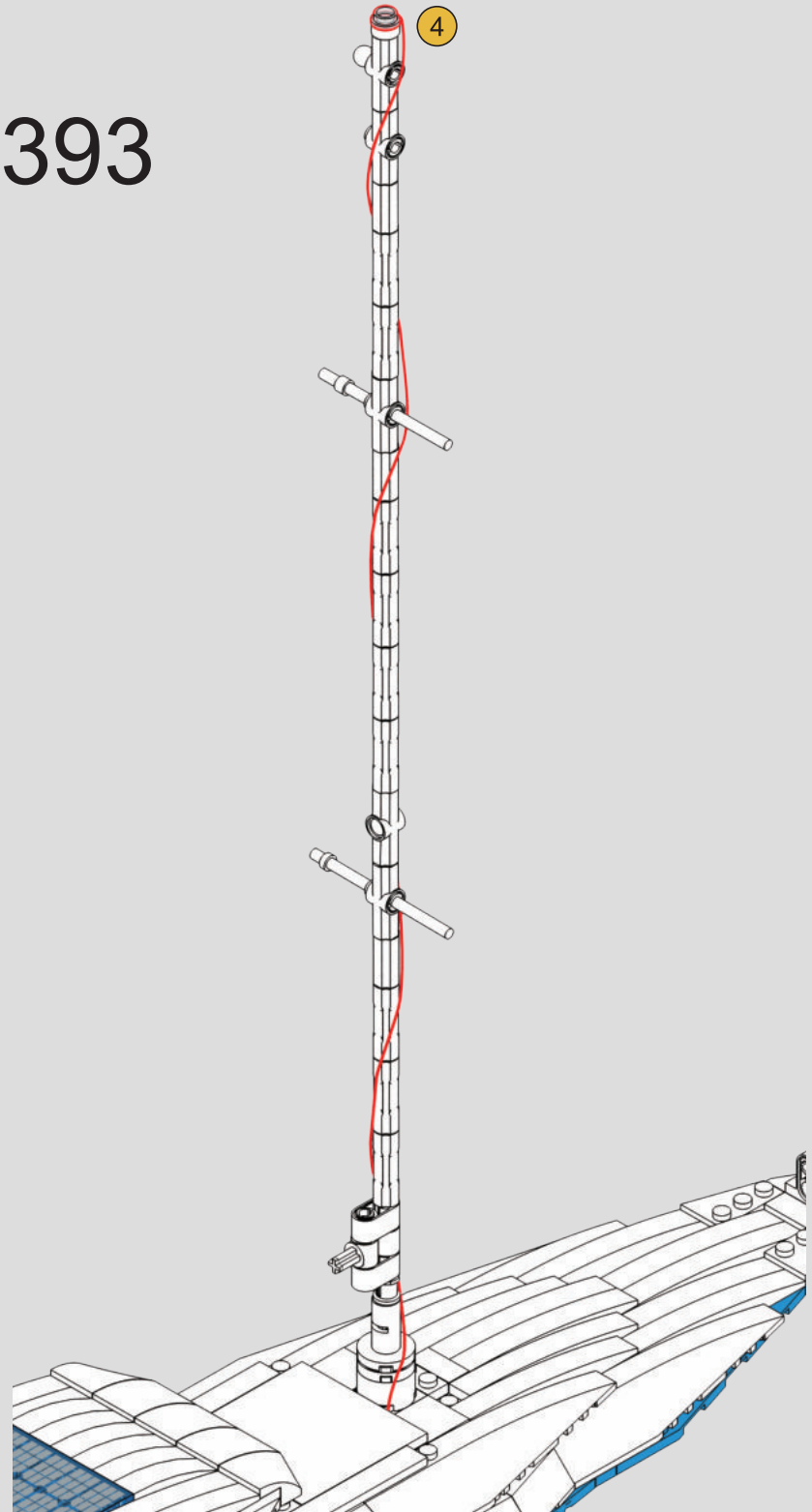

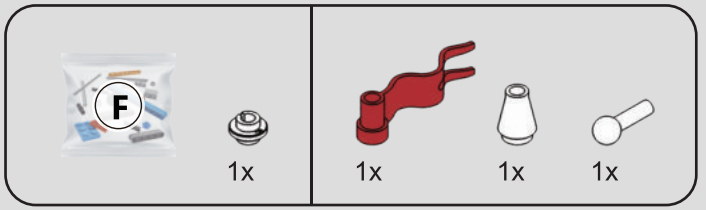

394

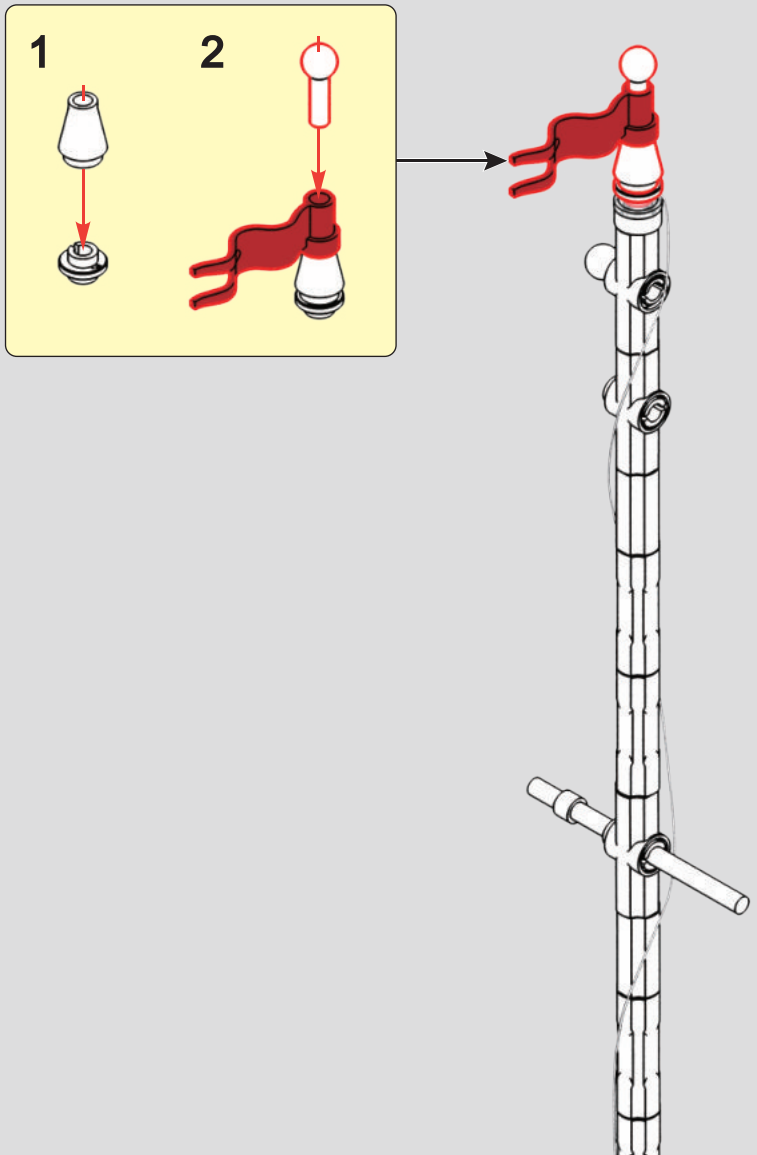

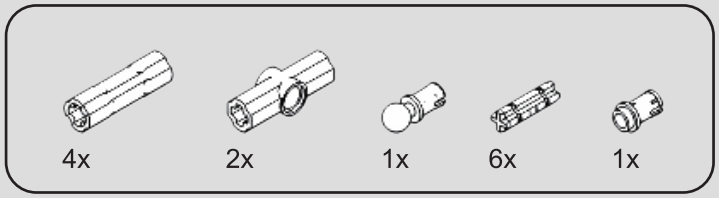

395

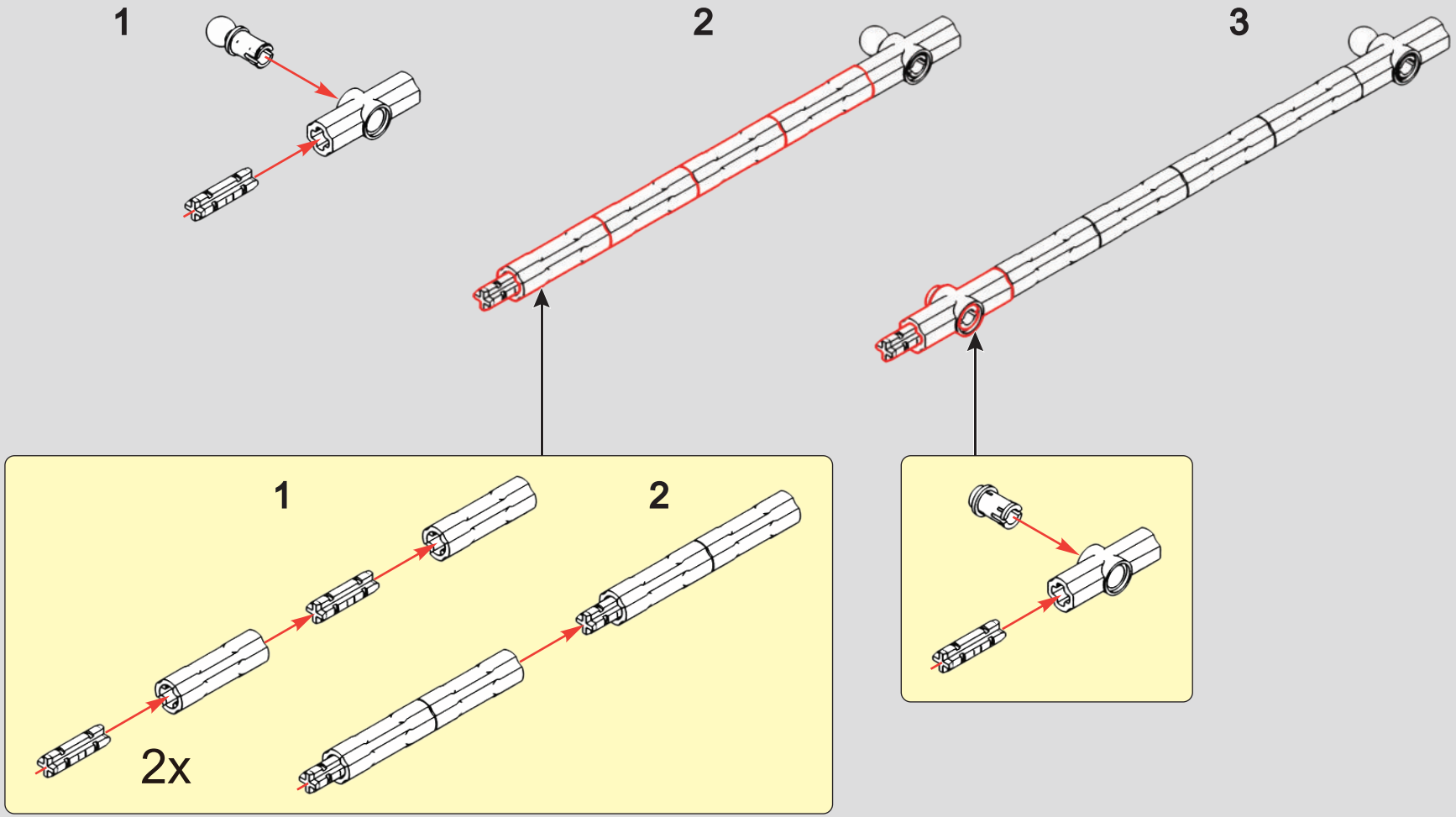

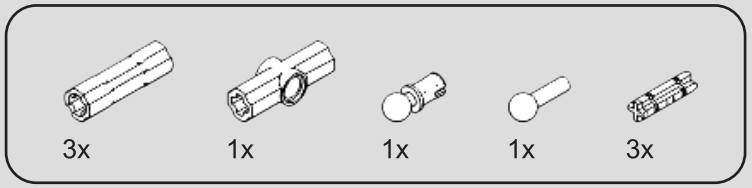

396

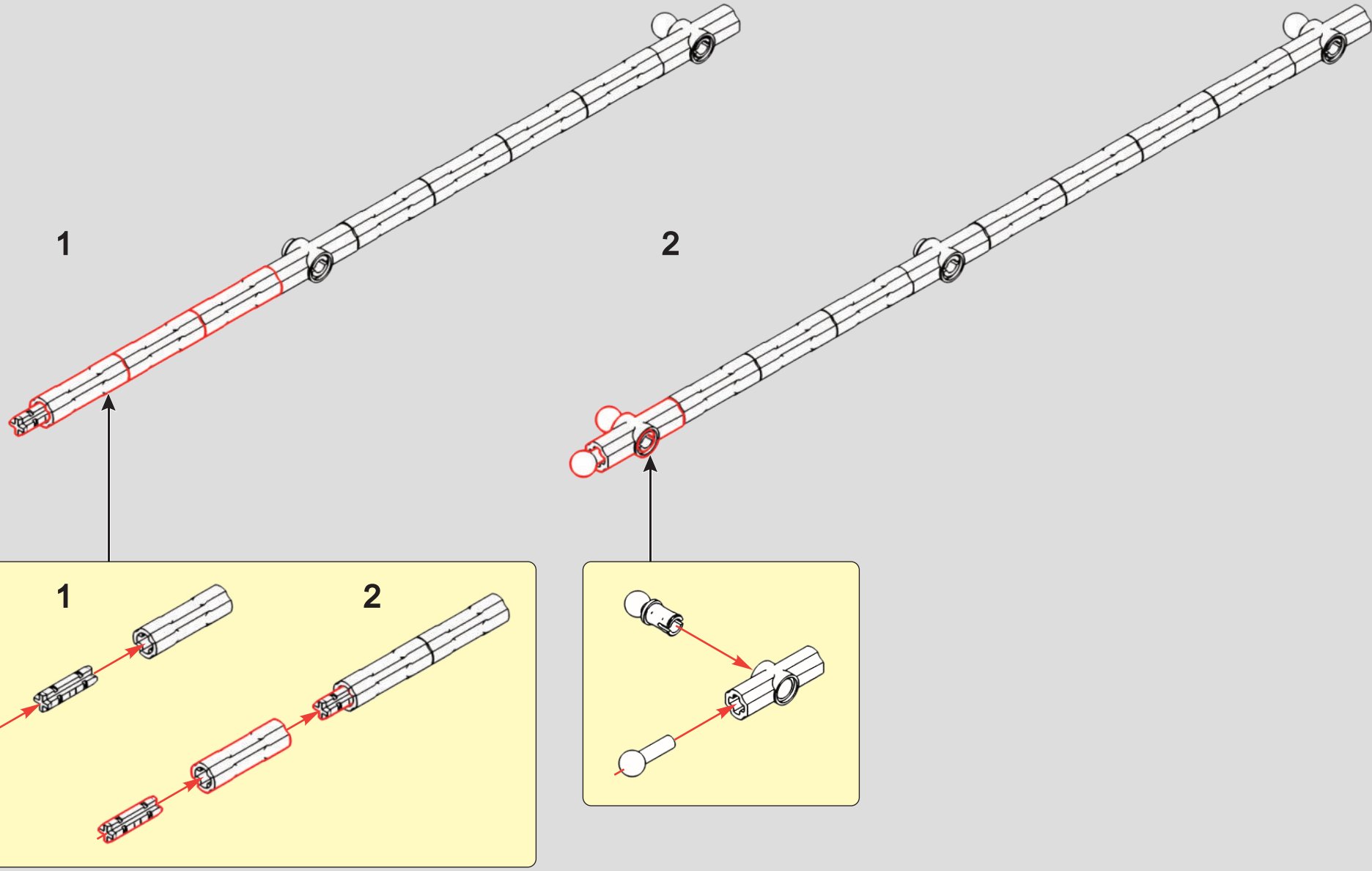

397

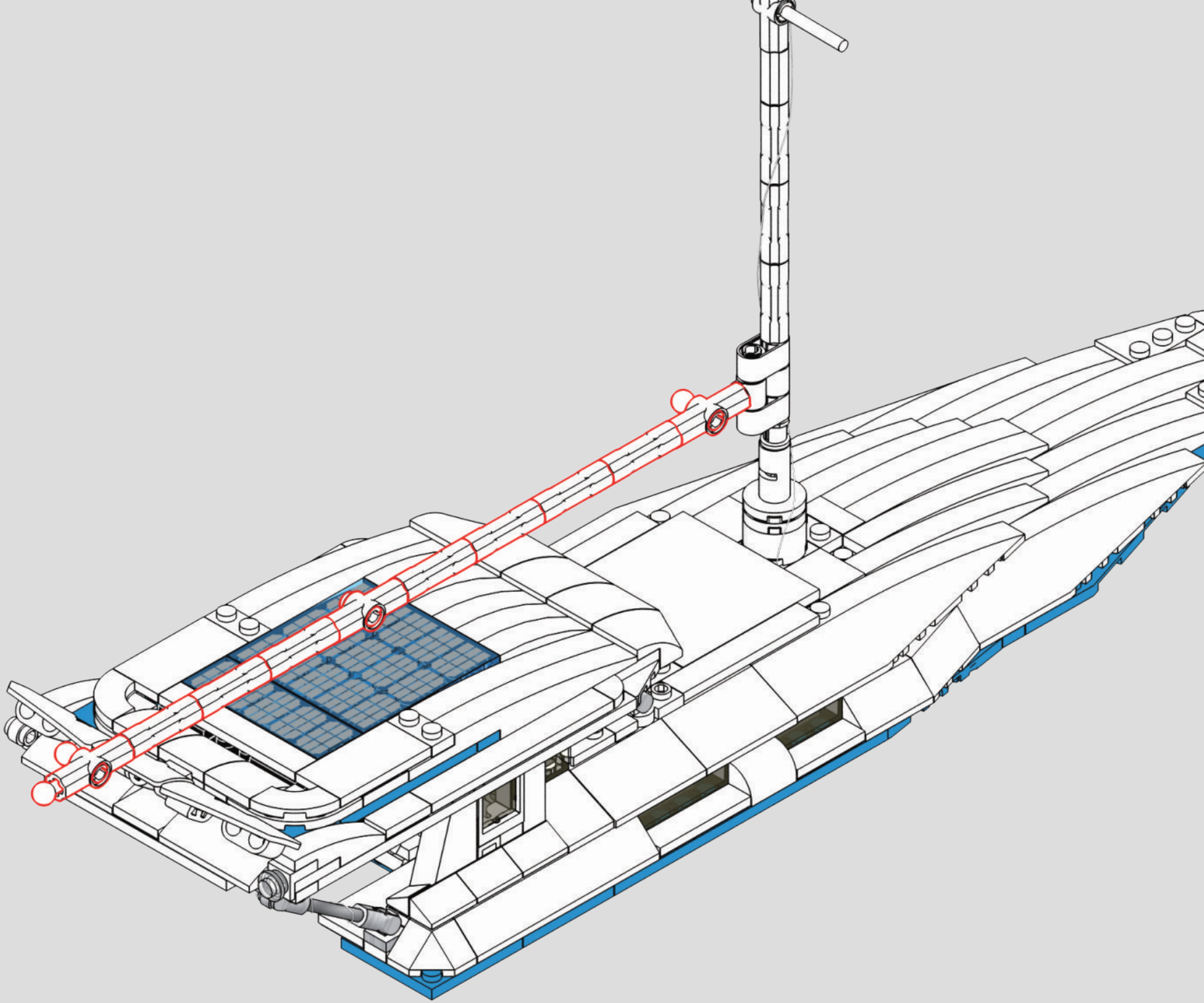

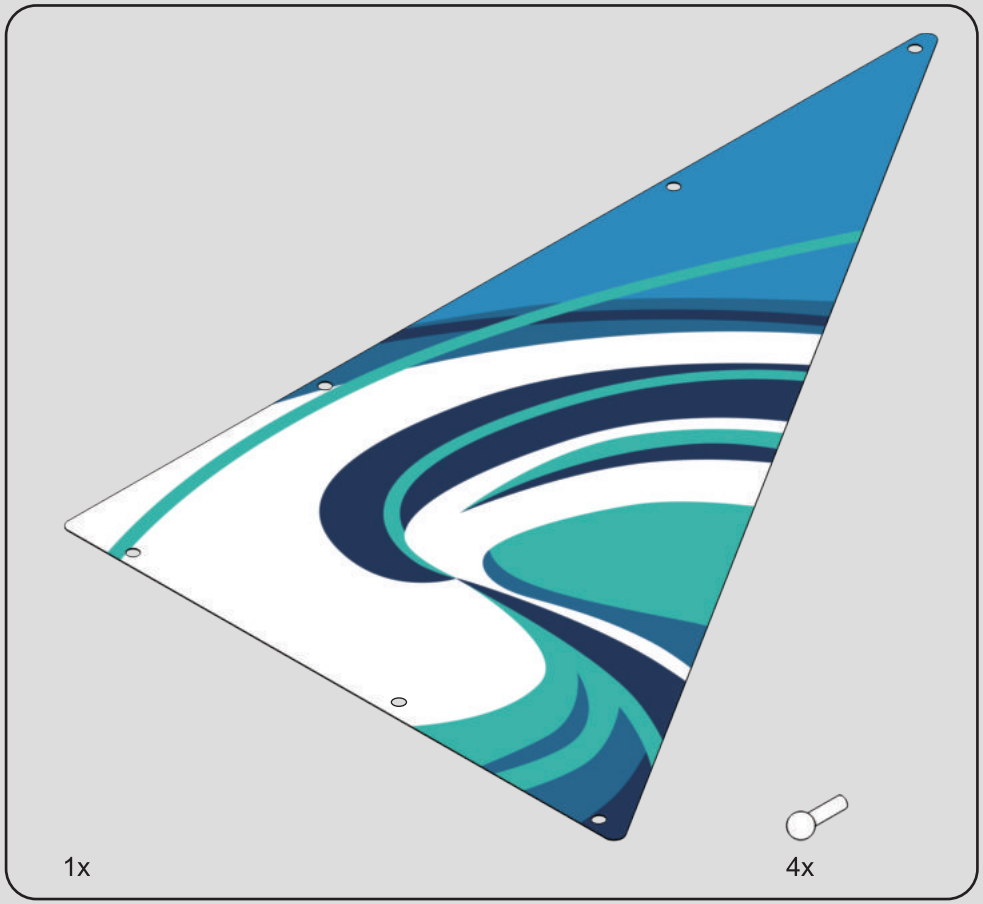

398

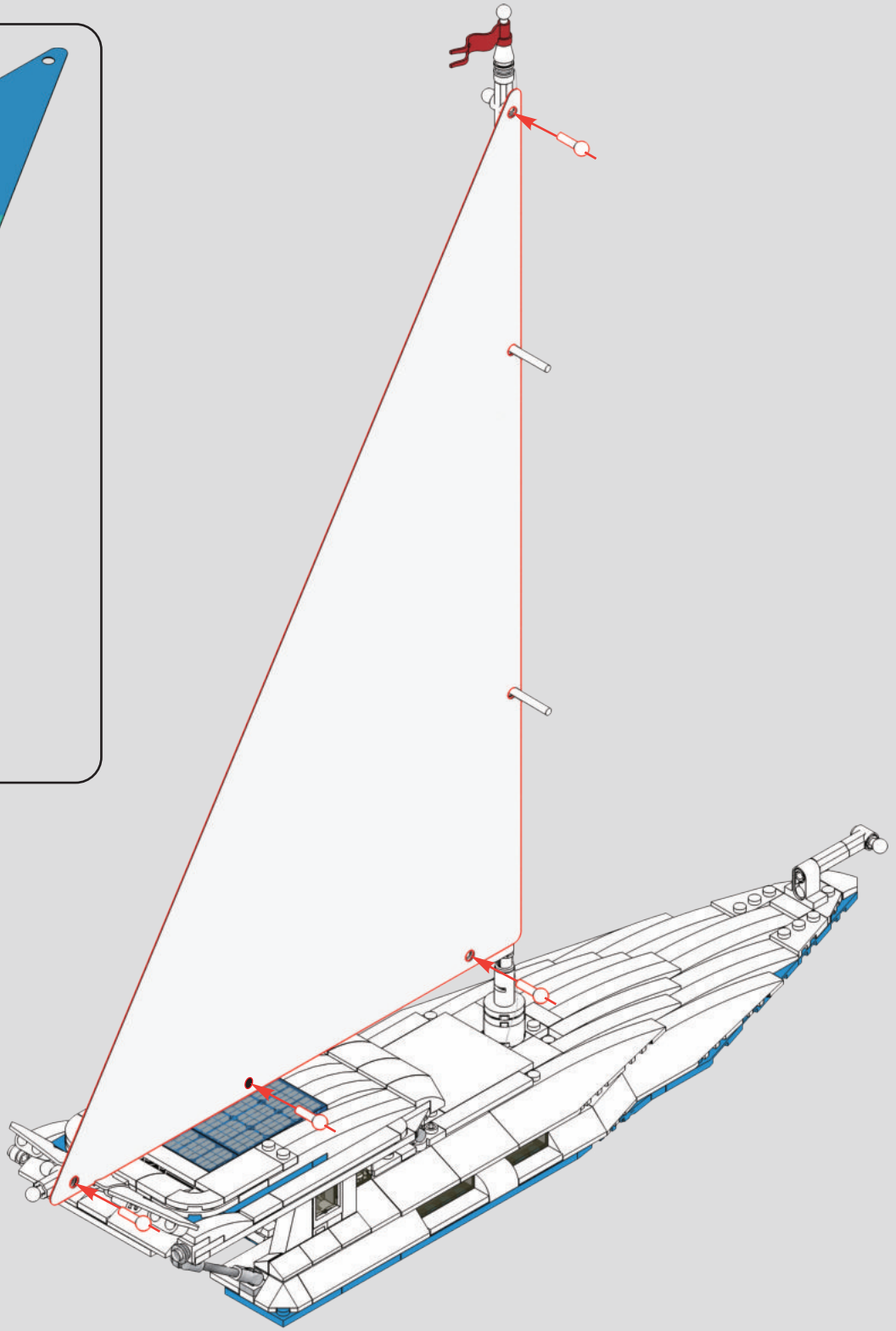

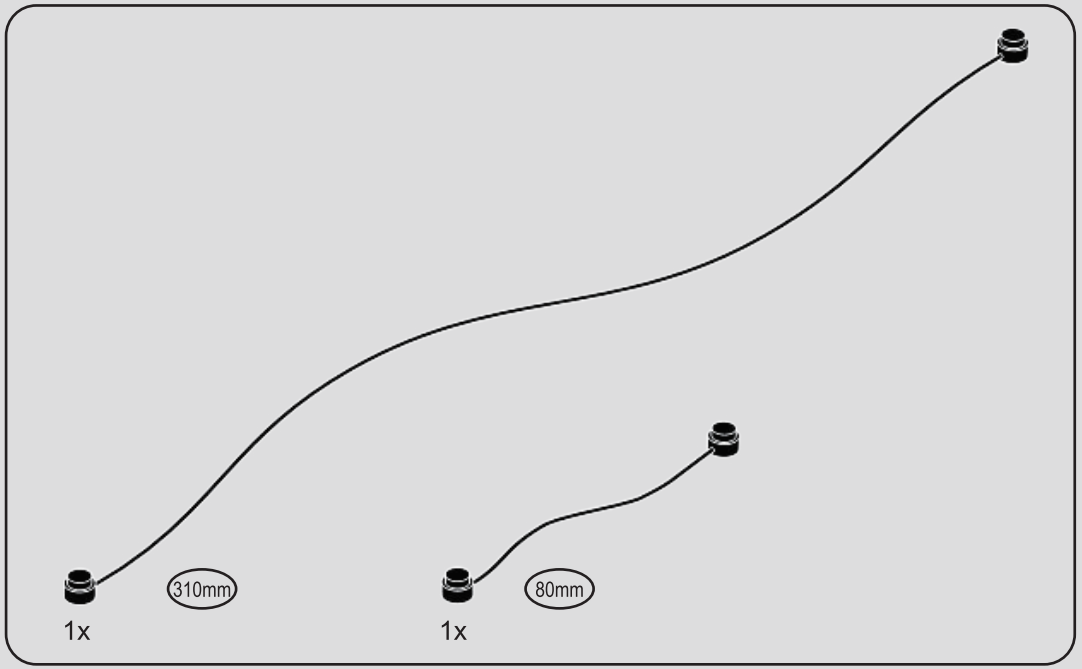

399

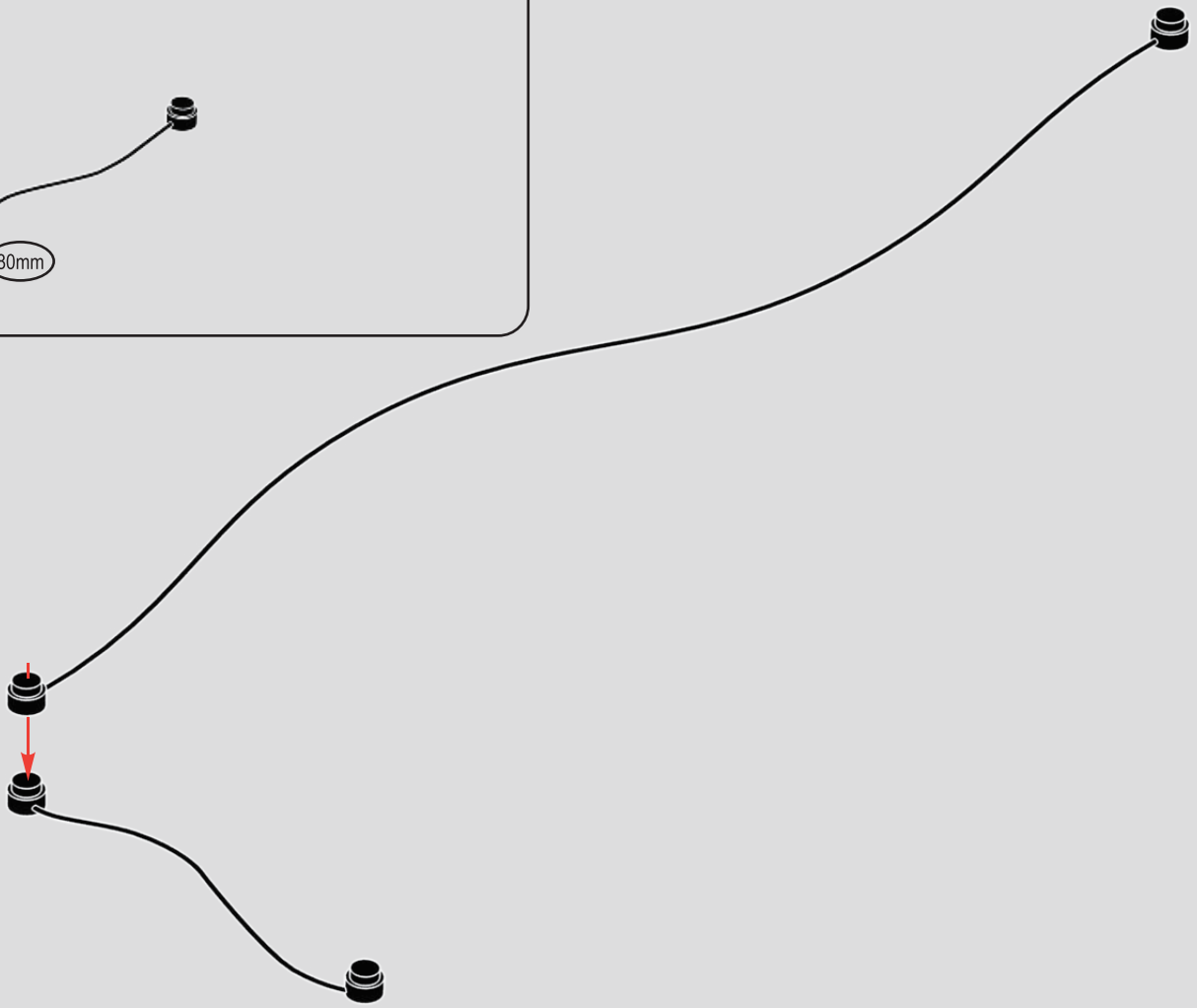

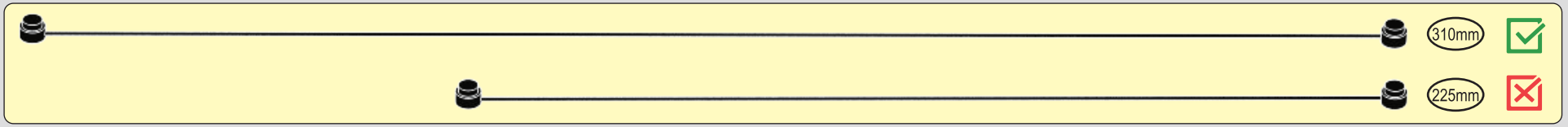

400

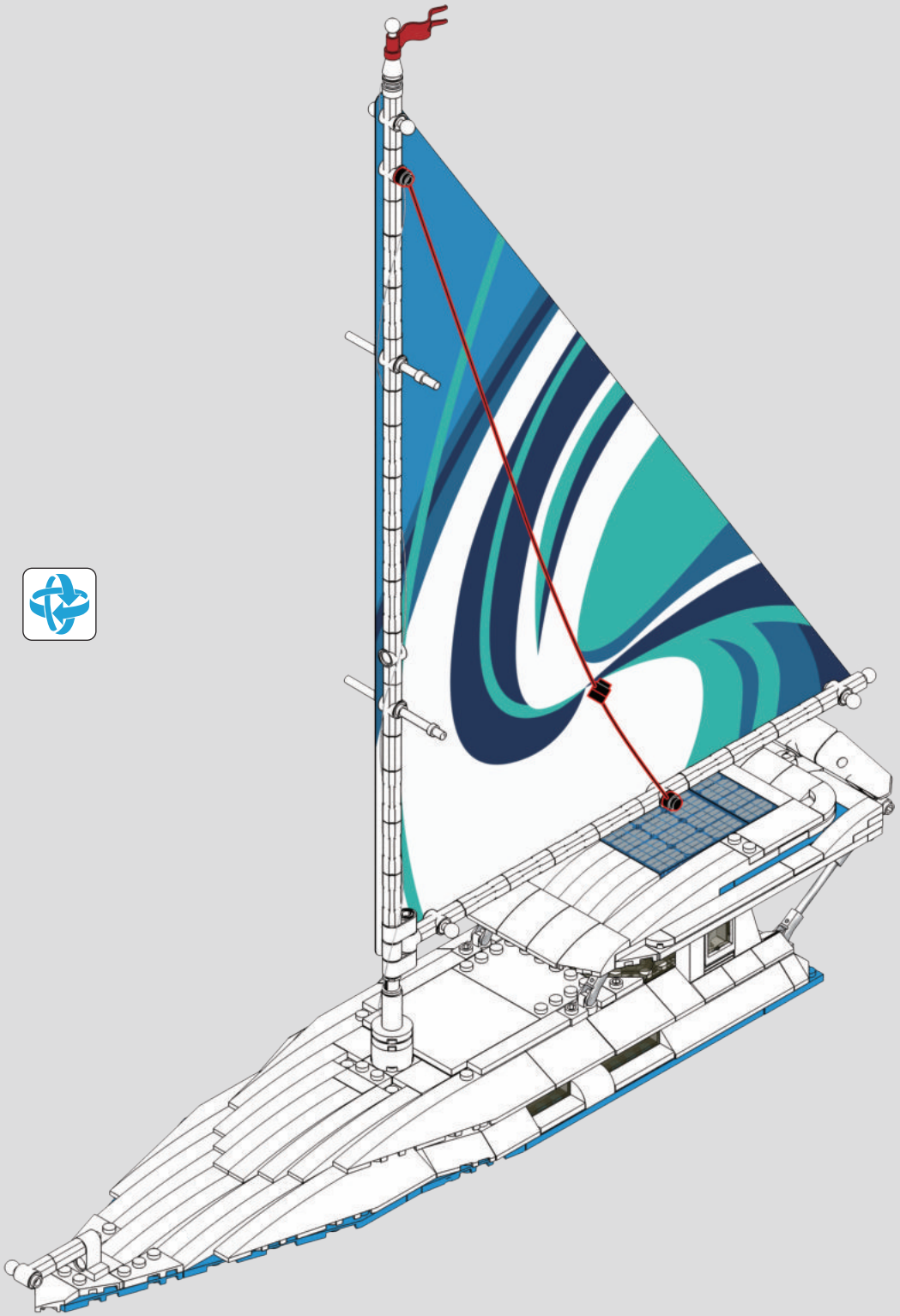

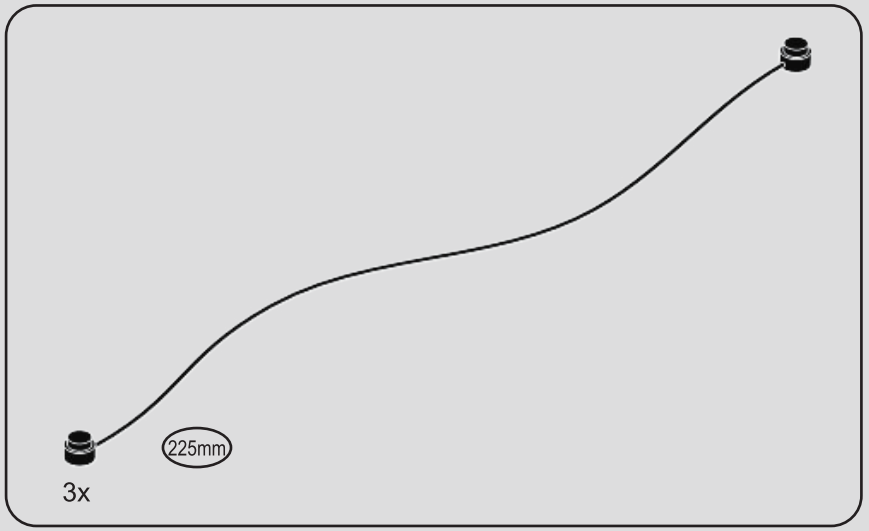

401

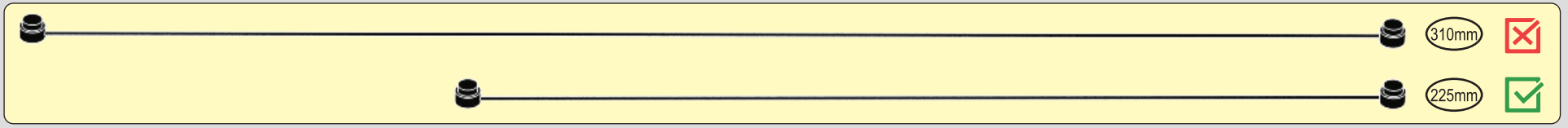

402

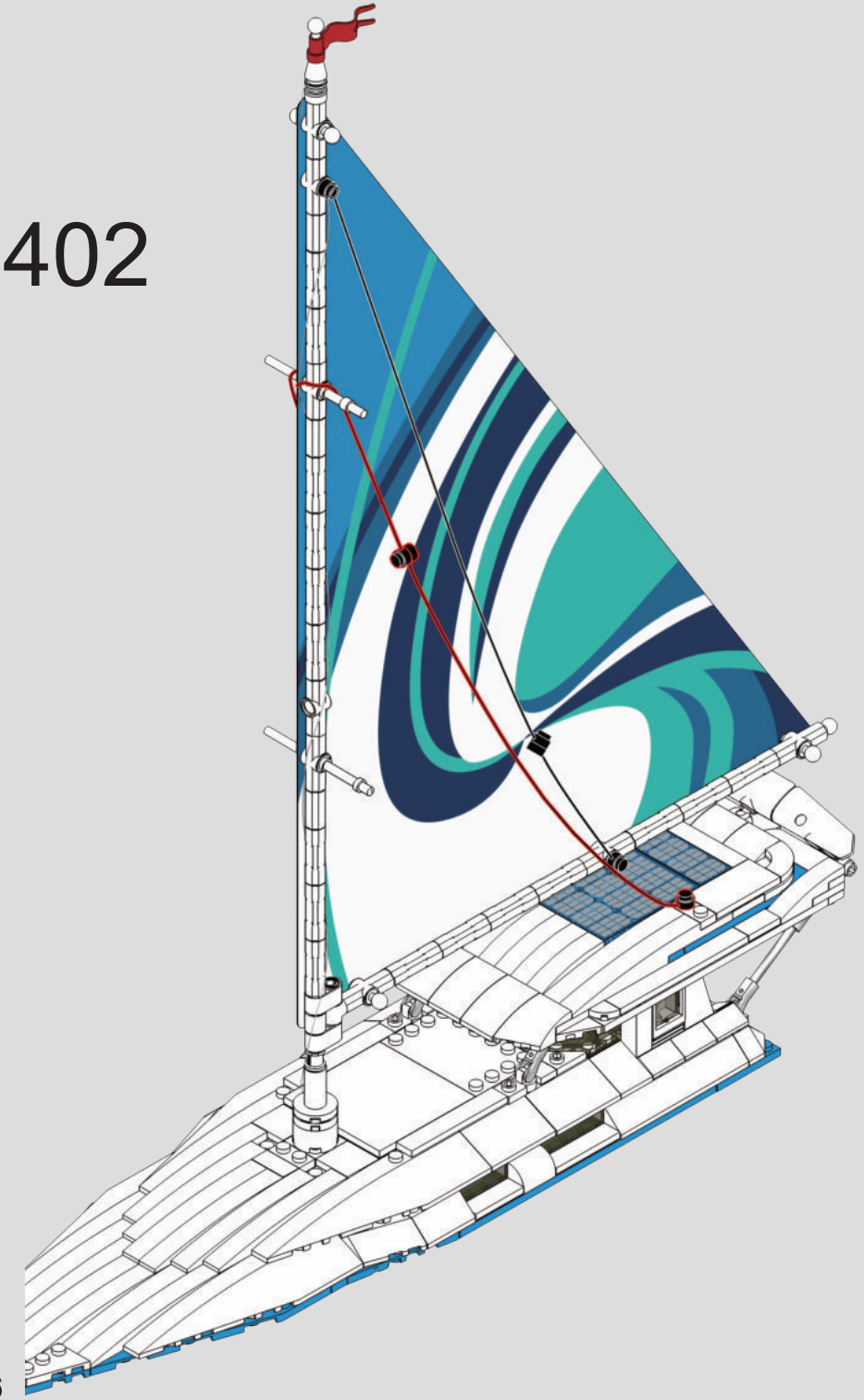

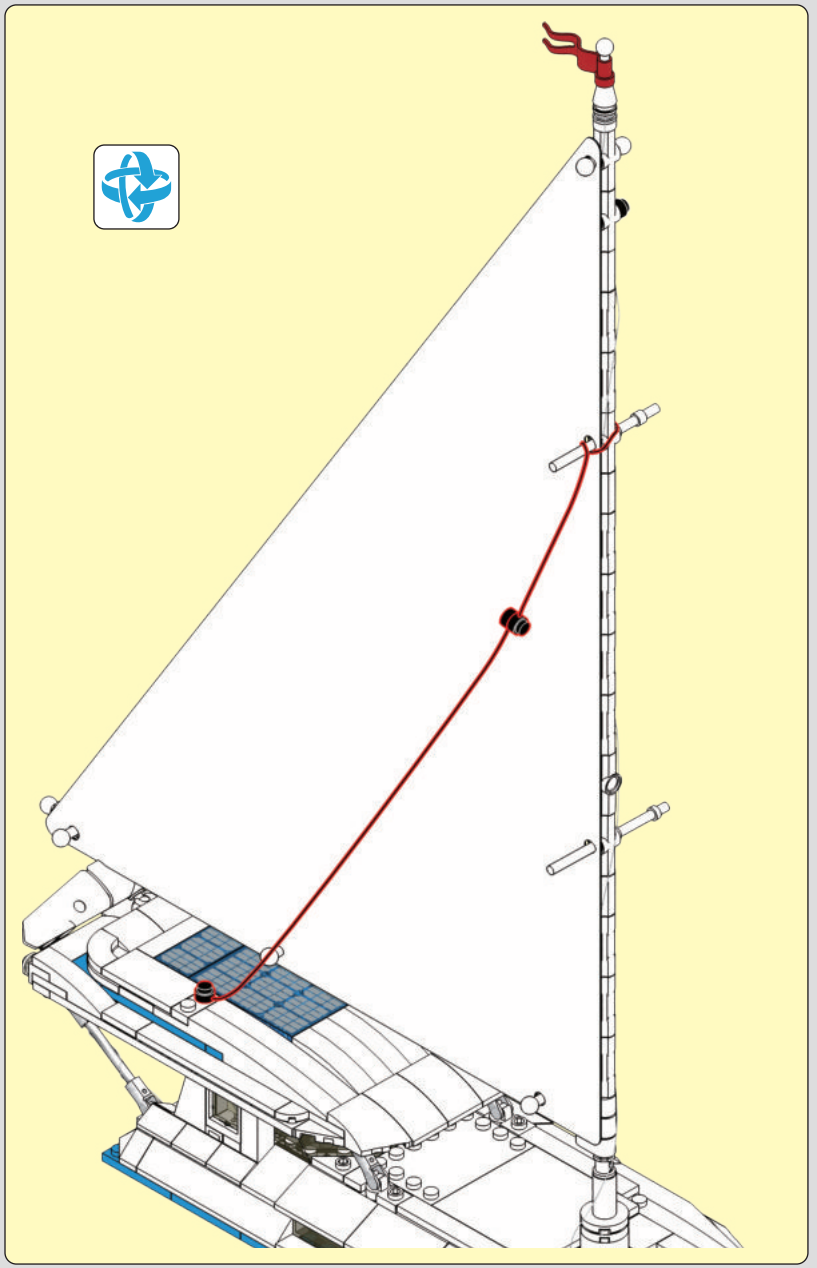

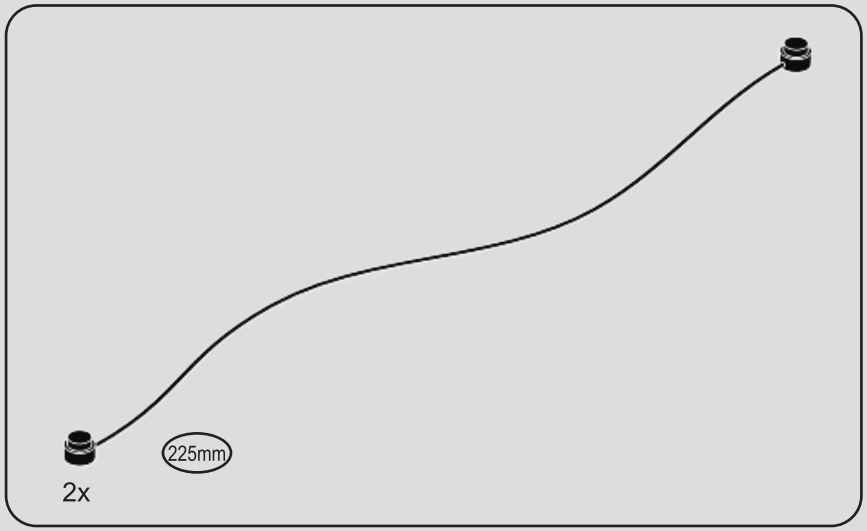

403

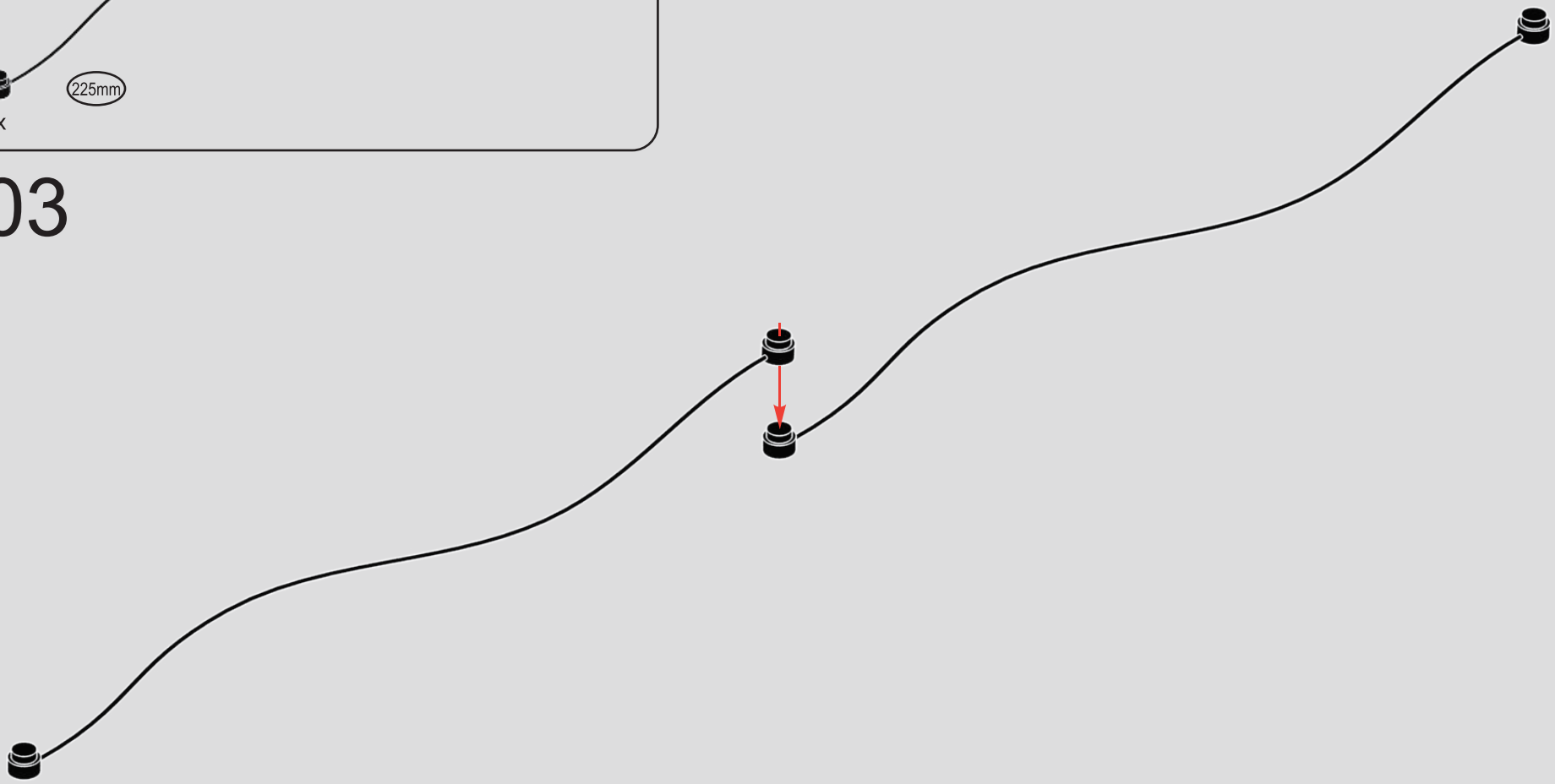

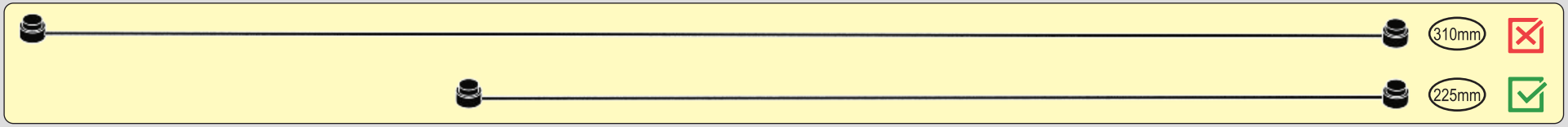

404

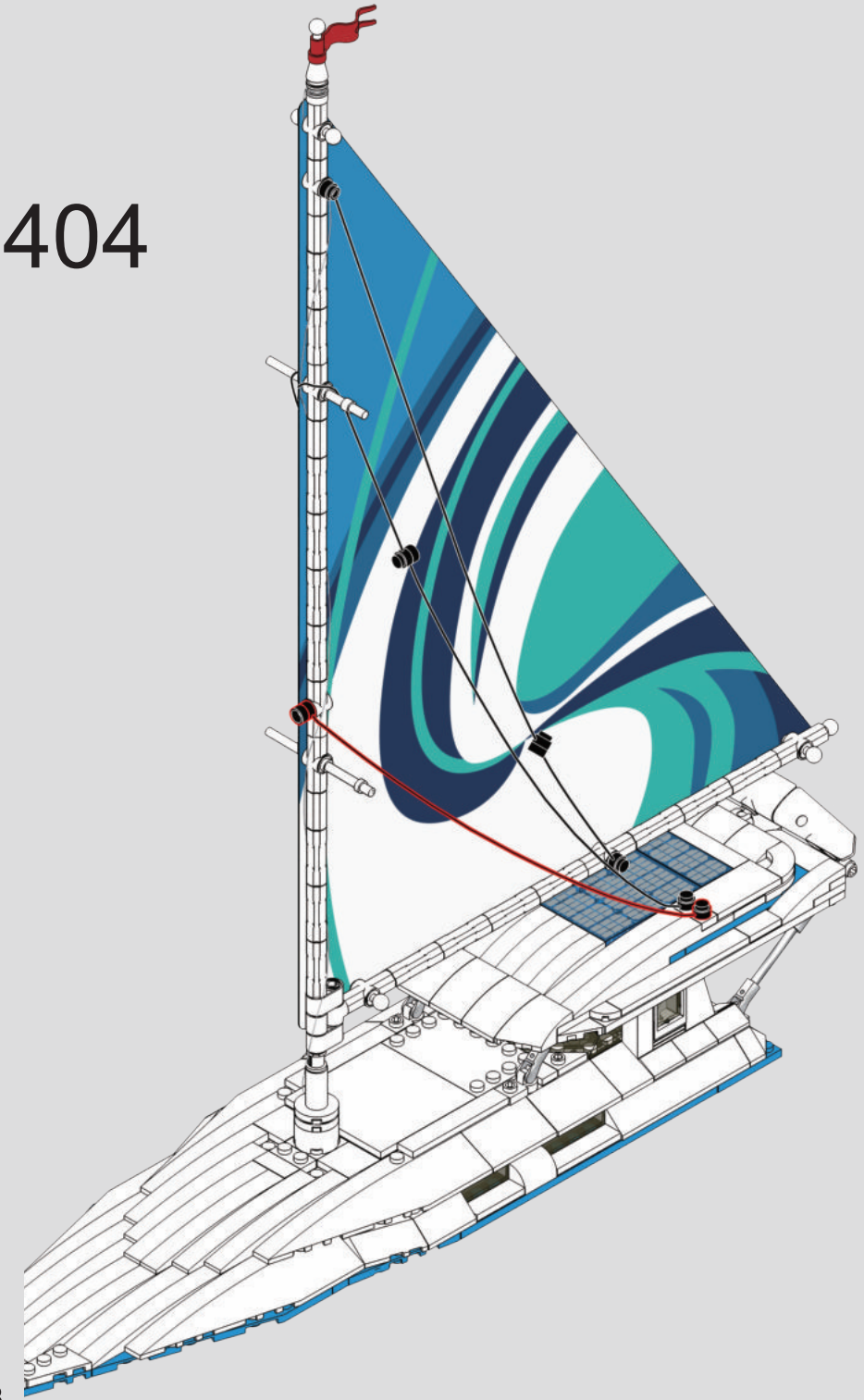

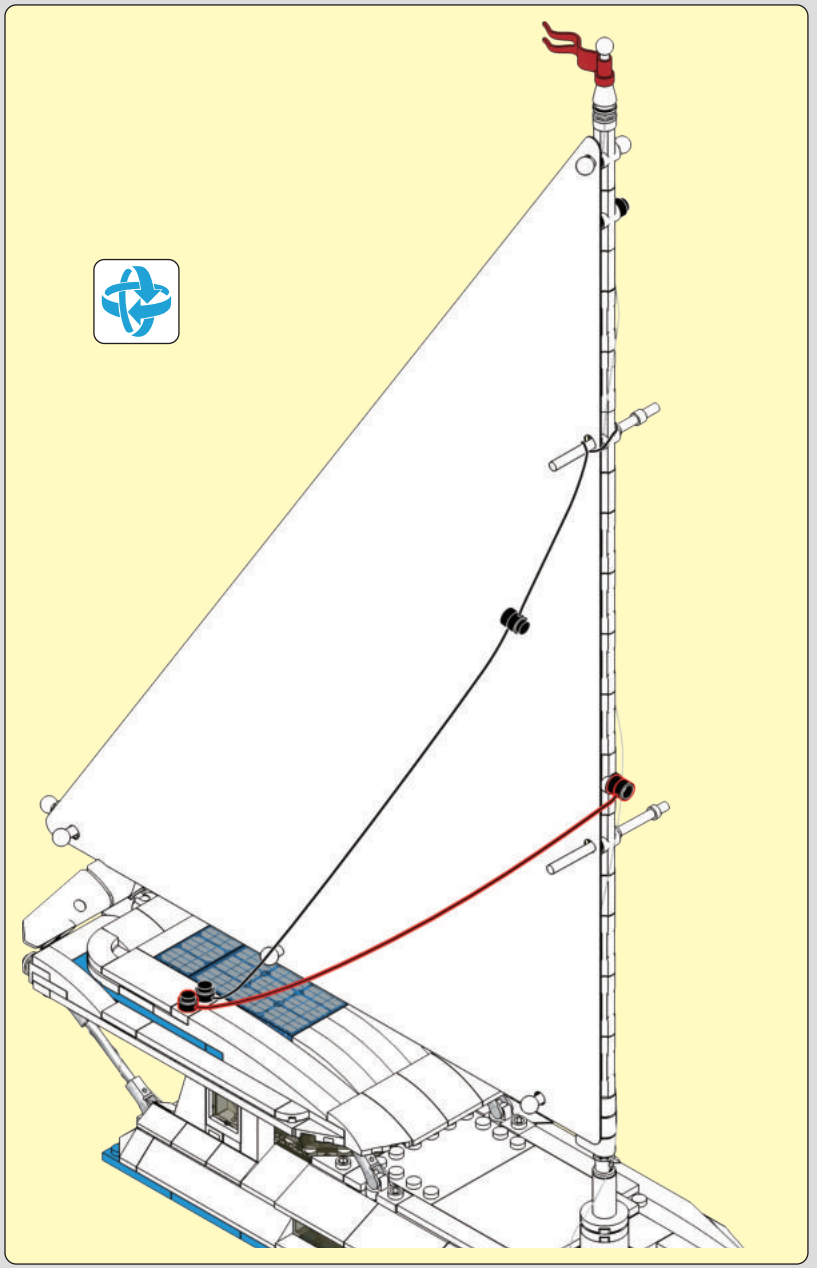

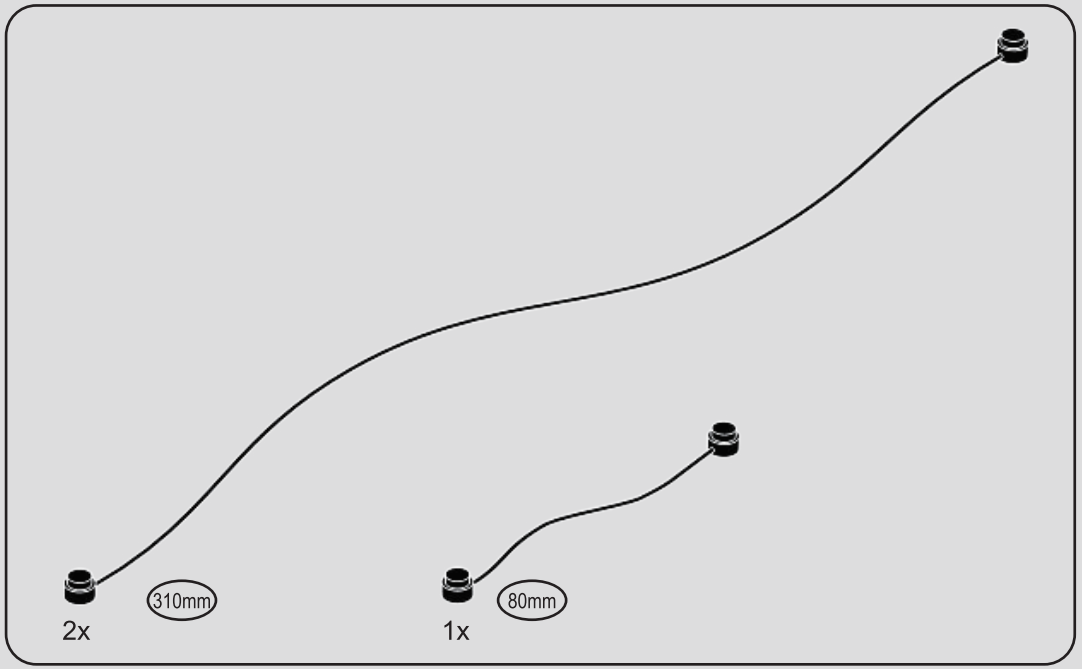

405



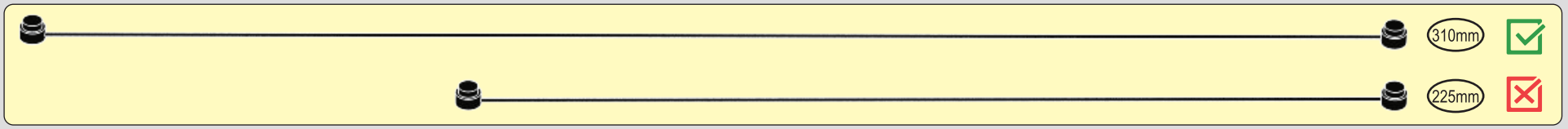

406

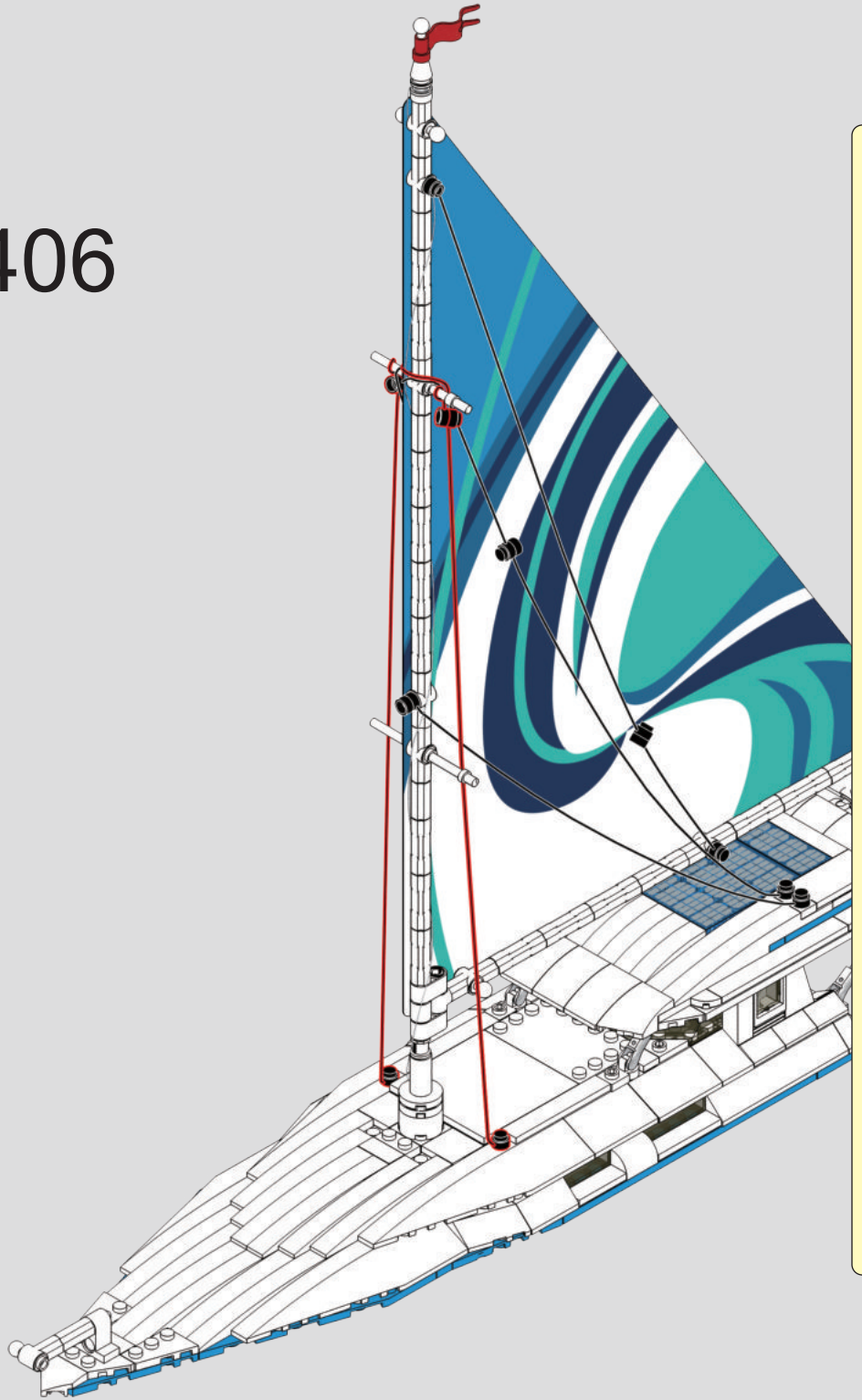

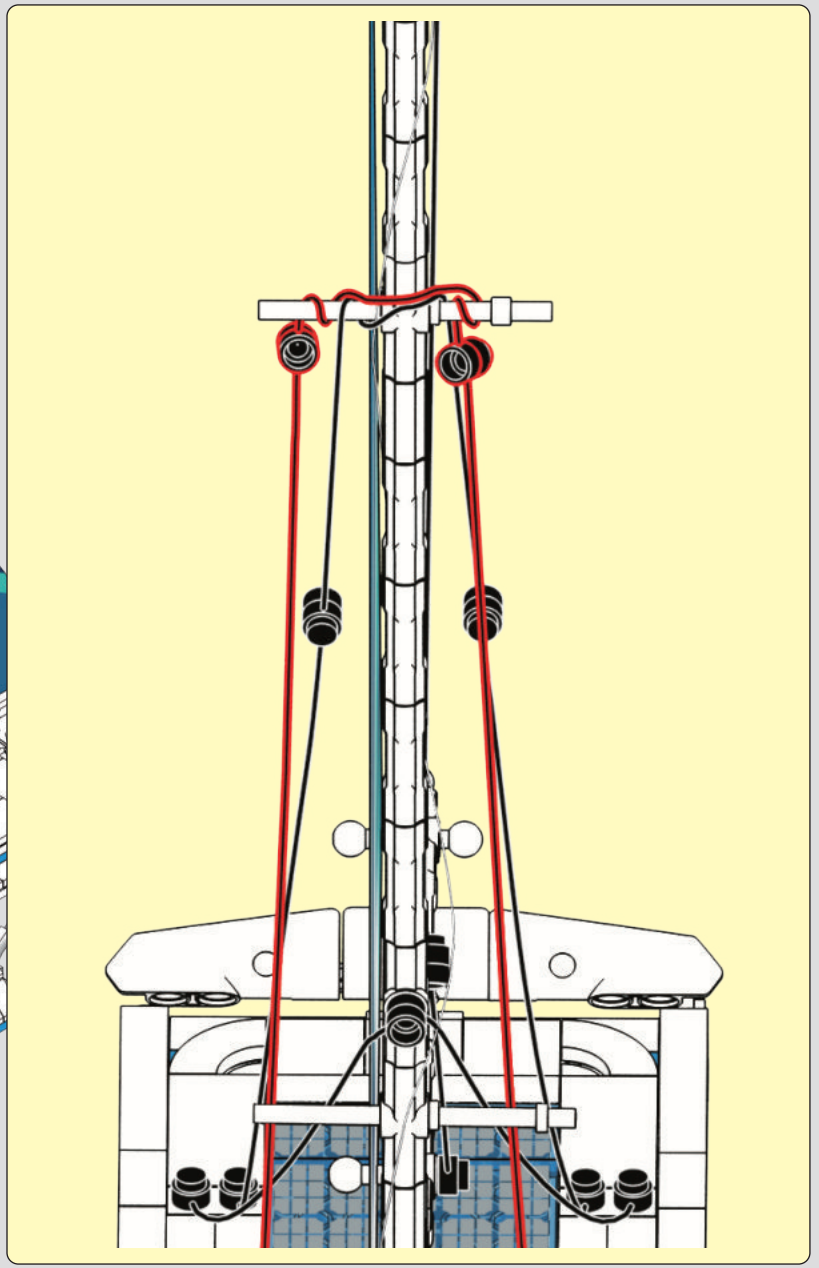

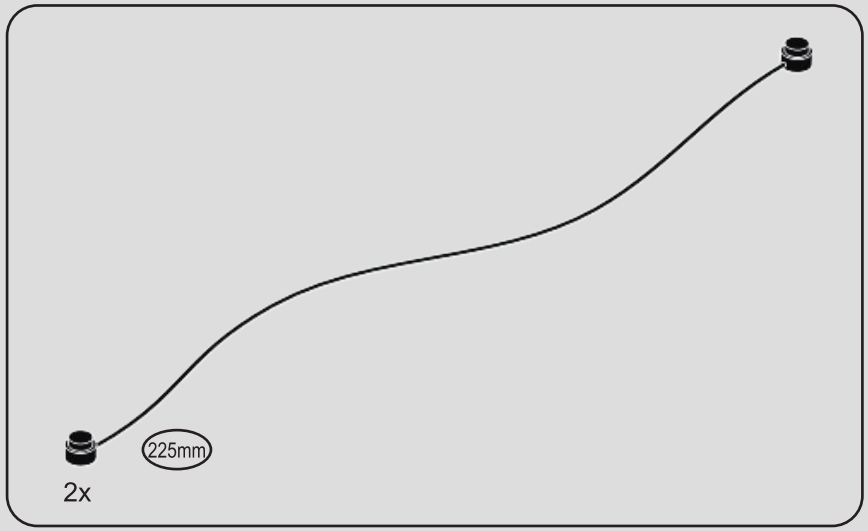

407

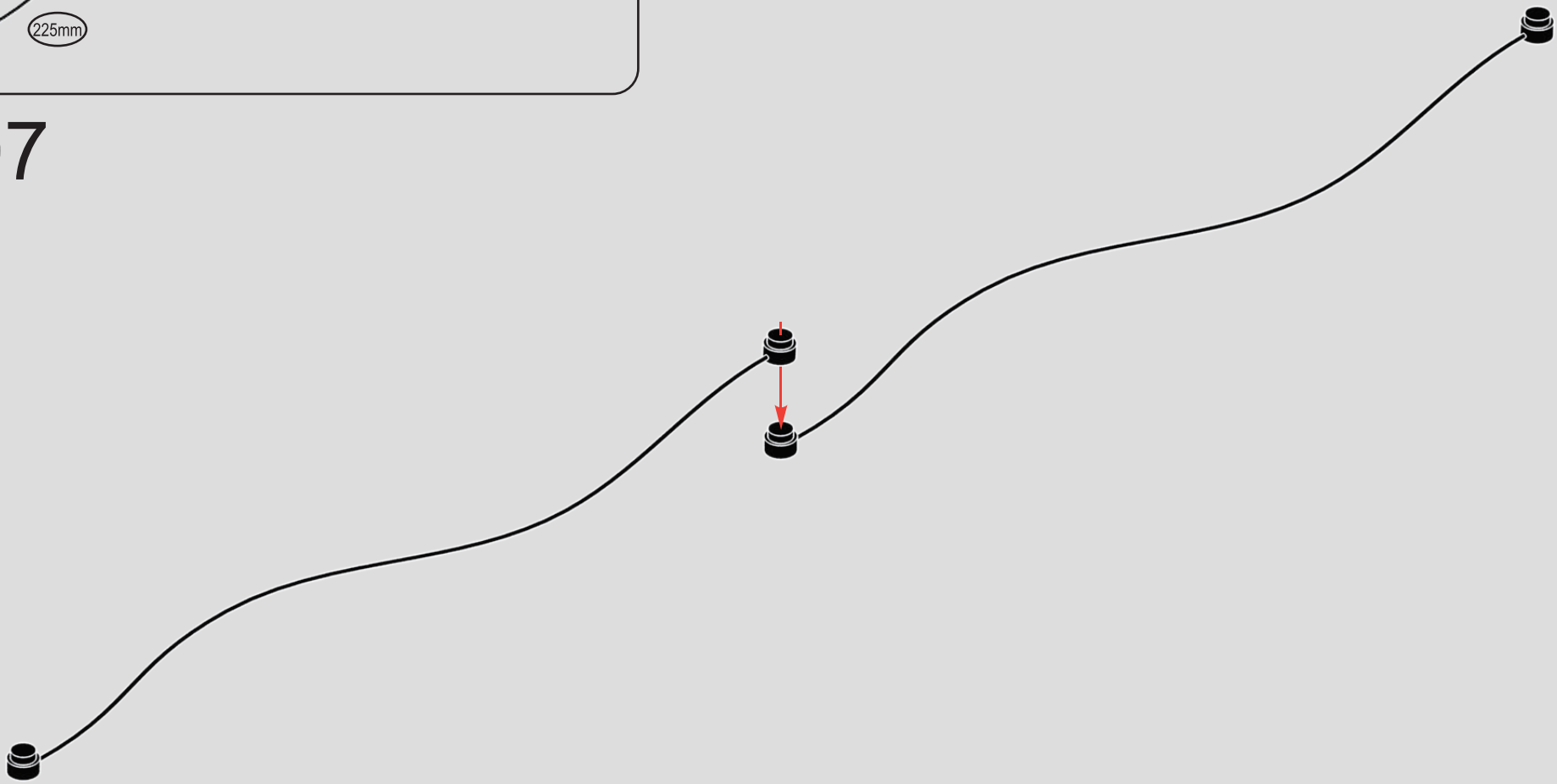

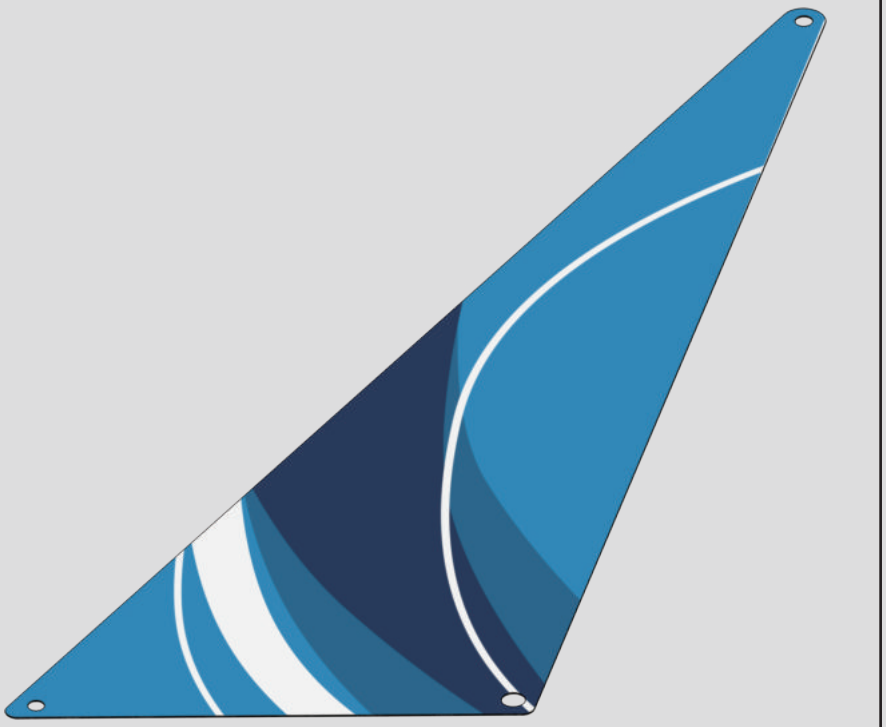

1x

408

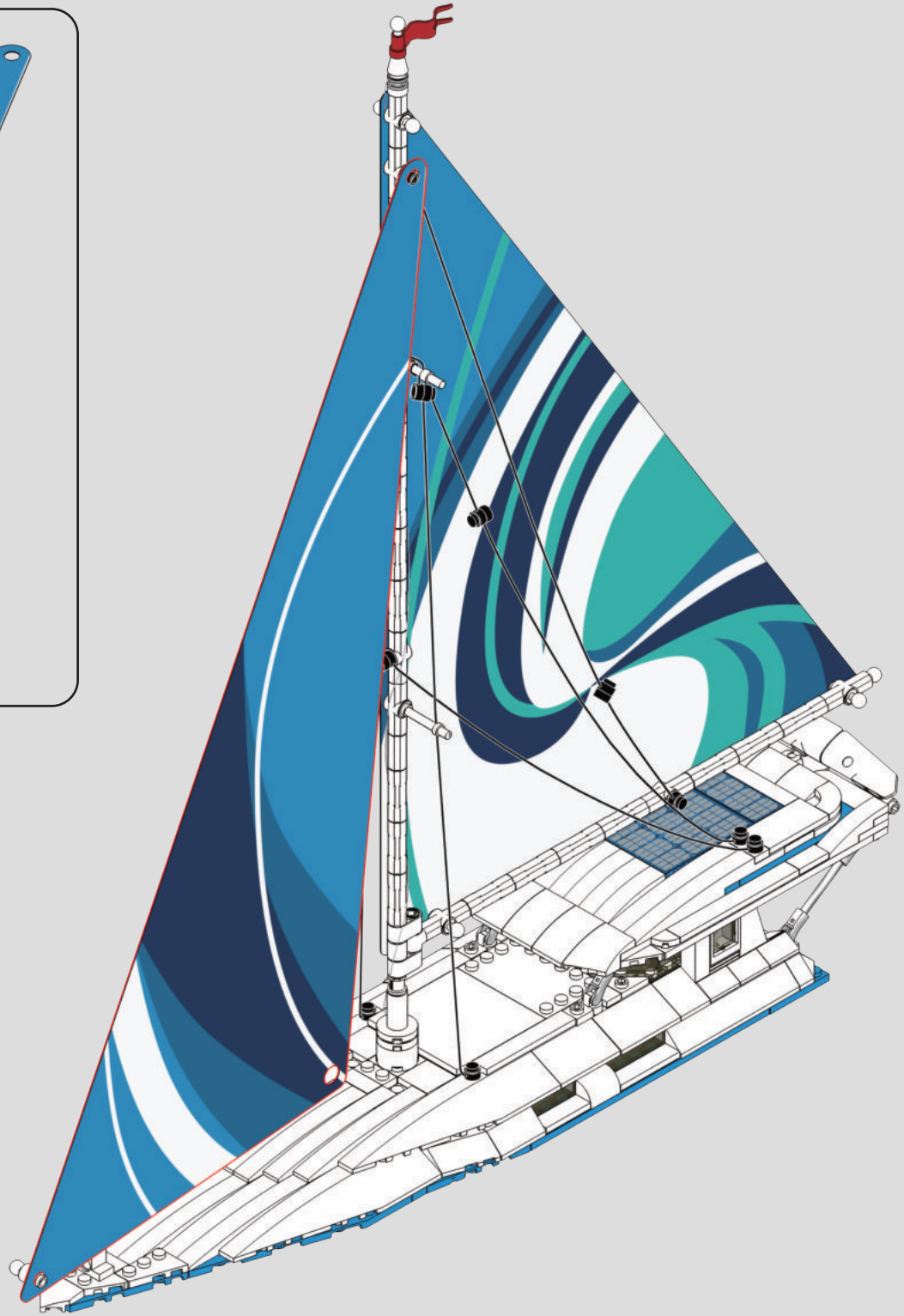

409

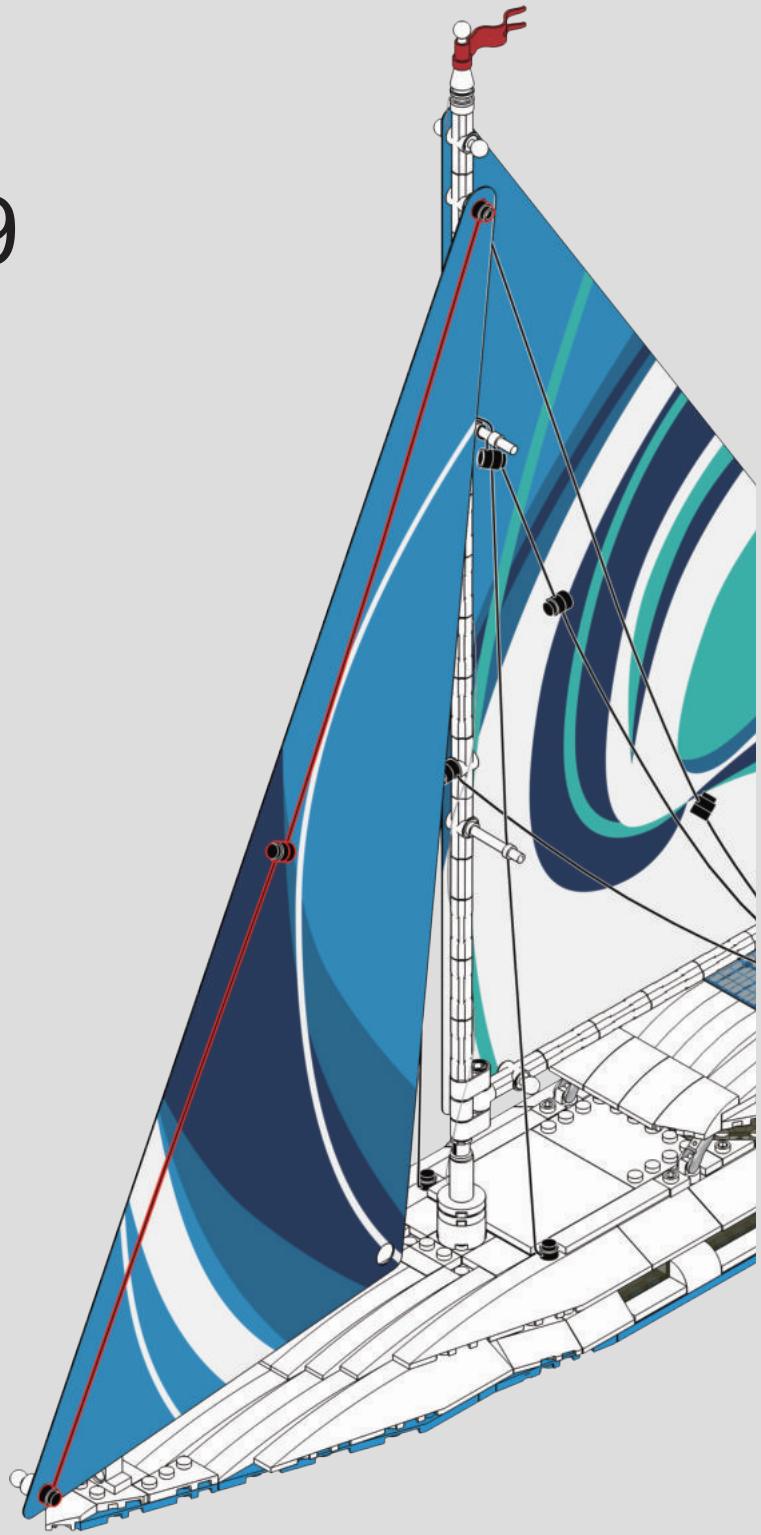

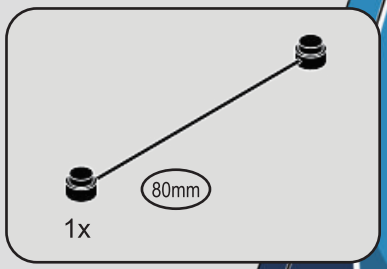

410

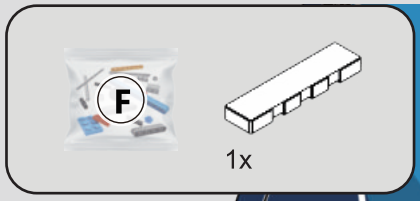

411

412

1

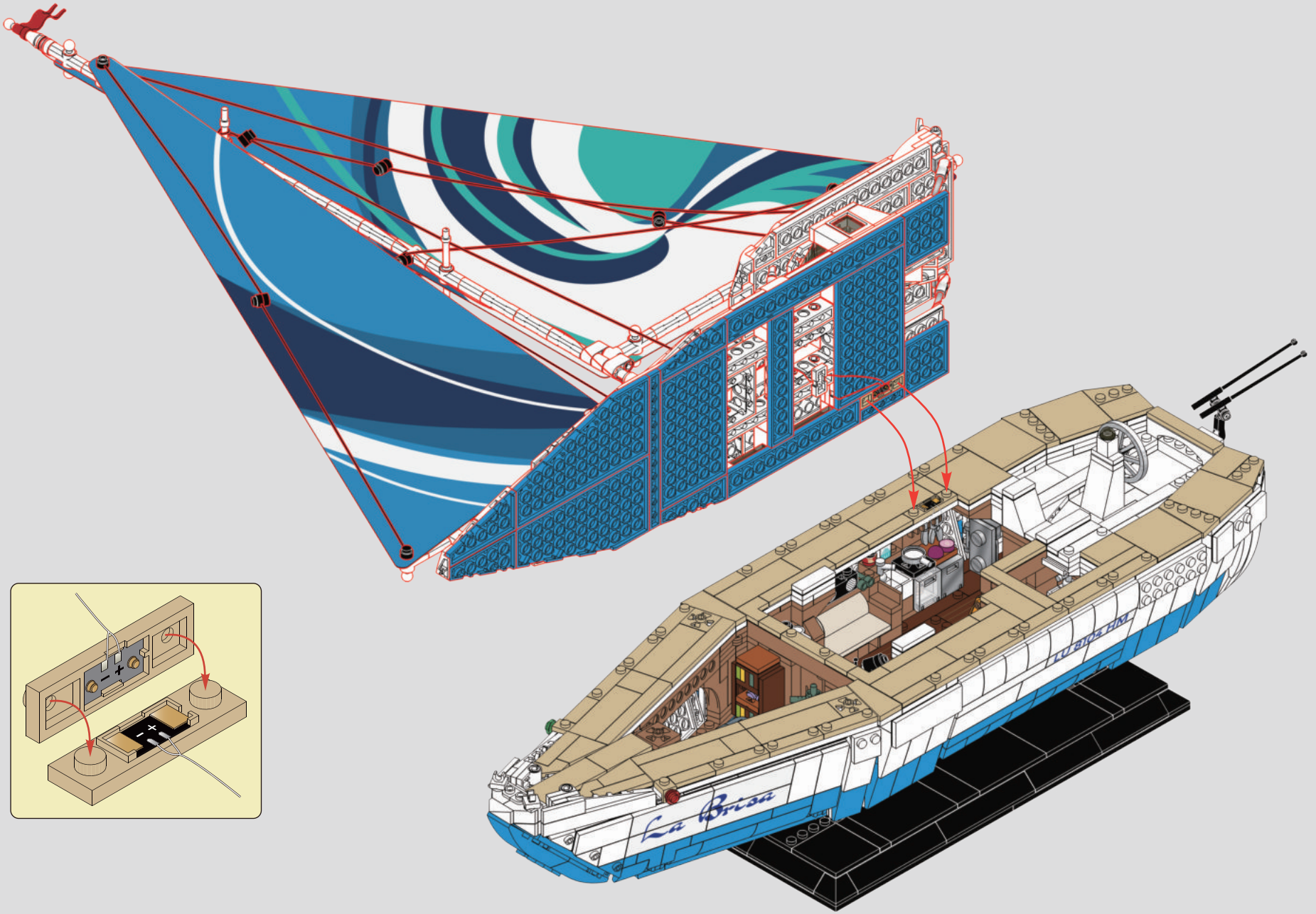

2



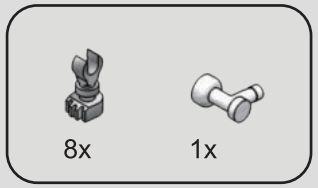

413

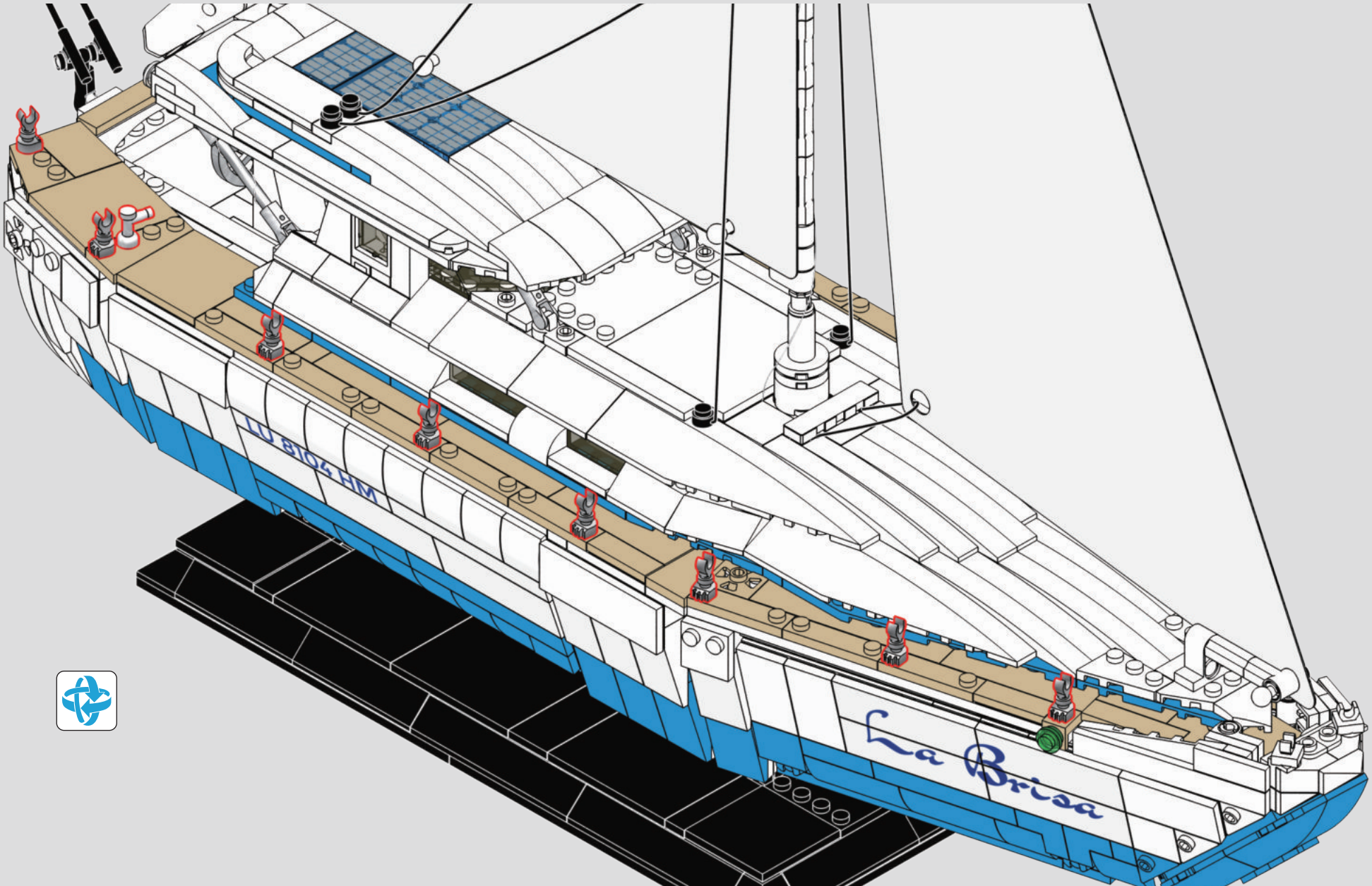

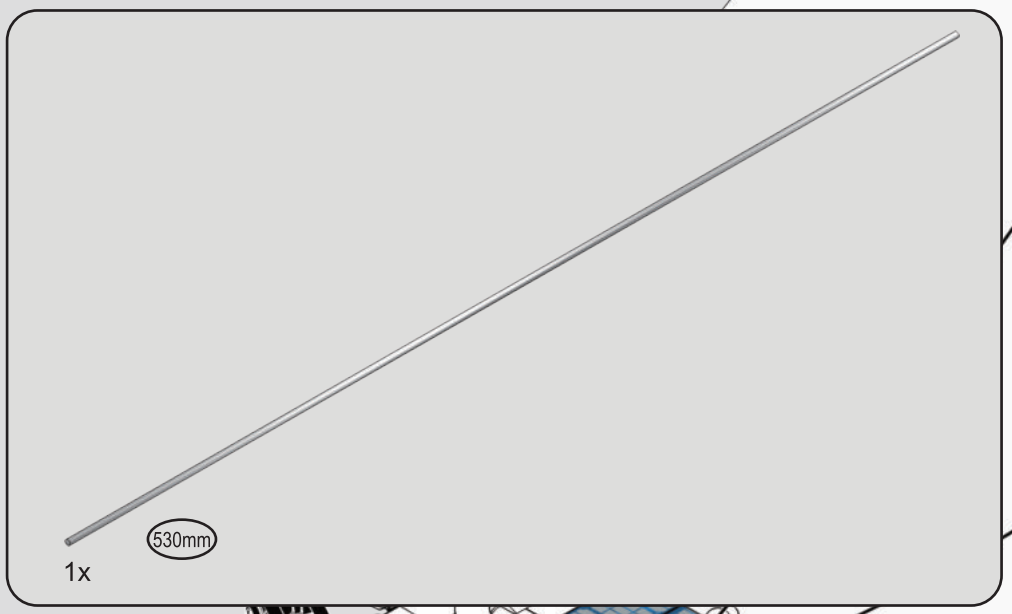

414

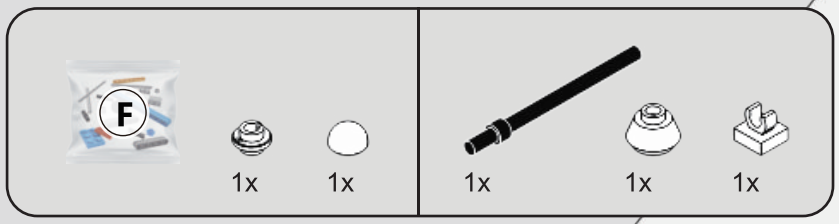

415

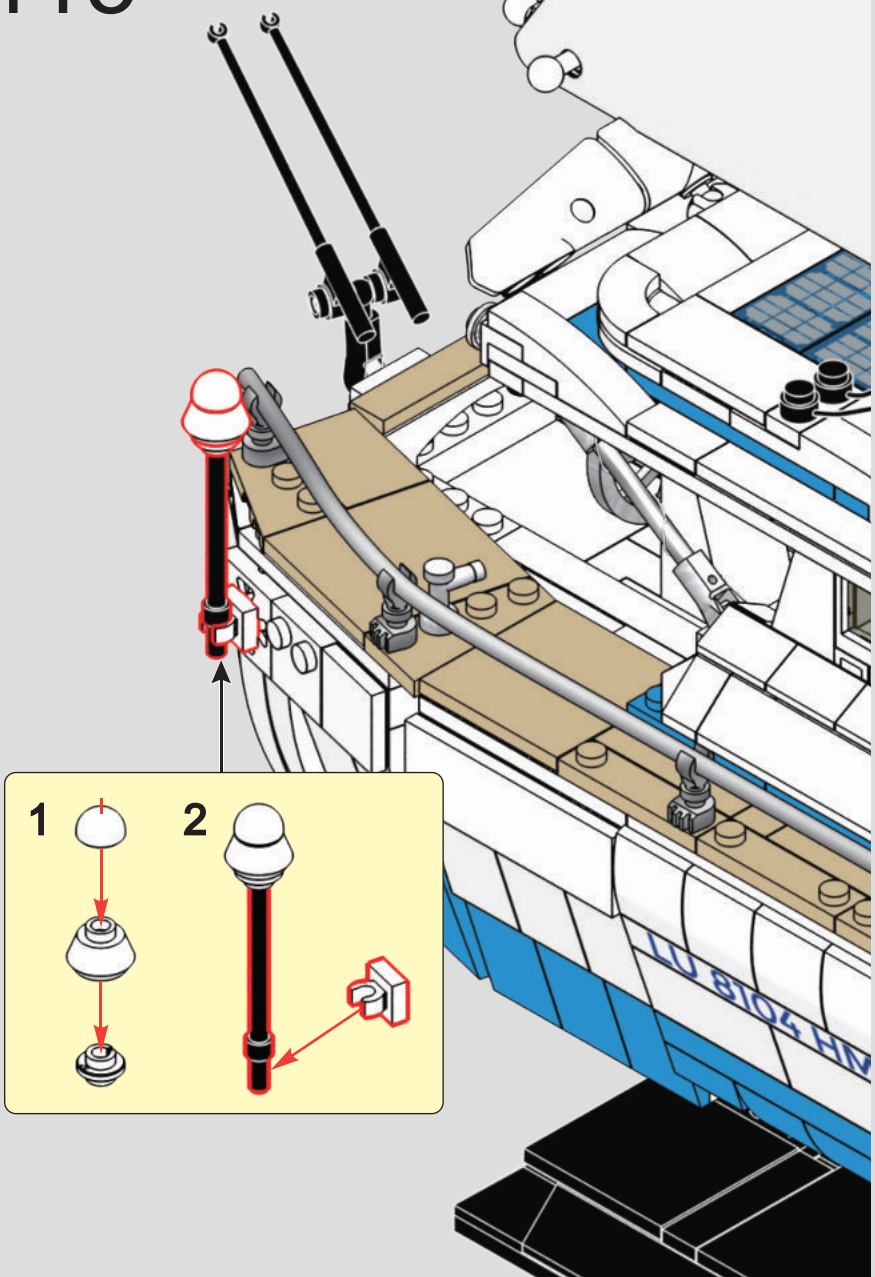



416

1

2

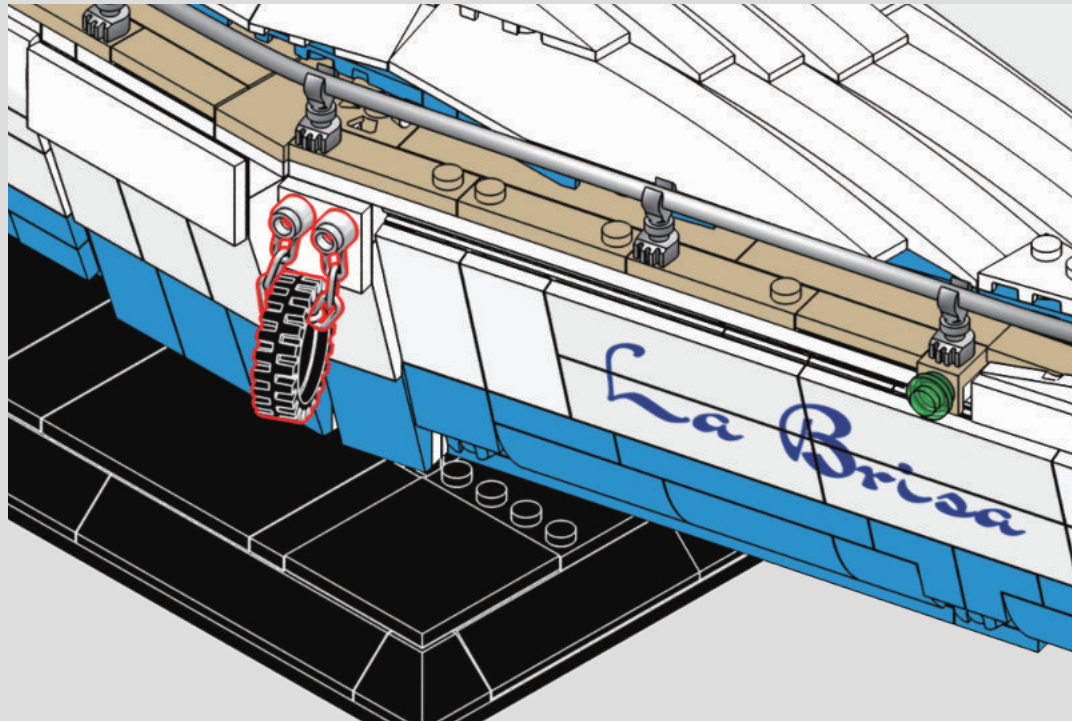

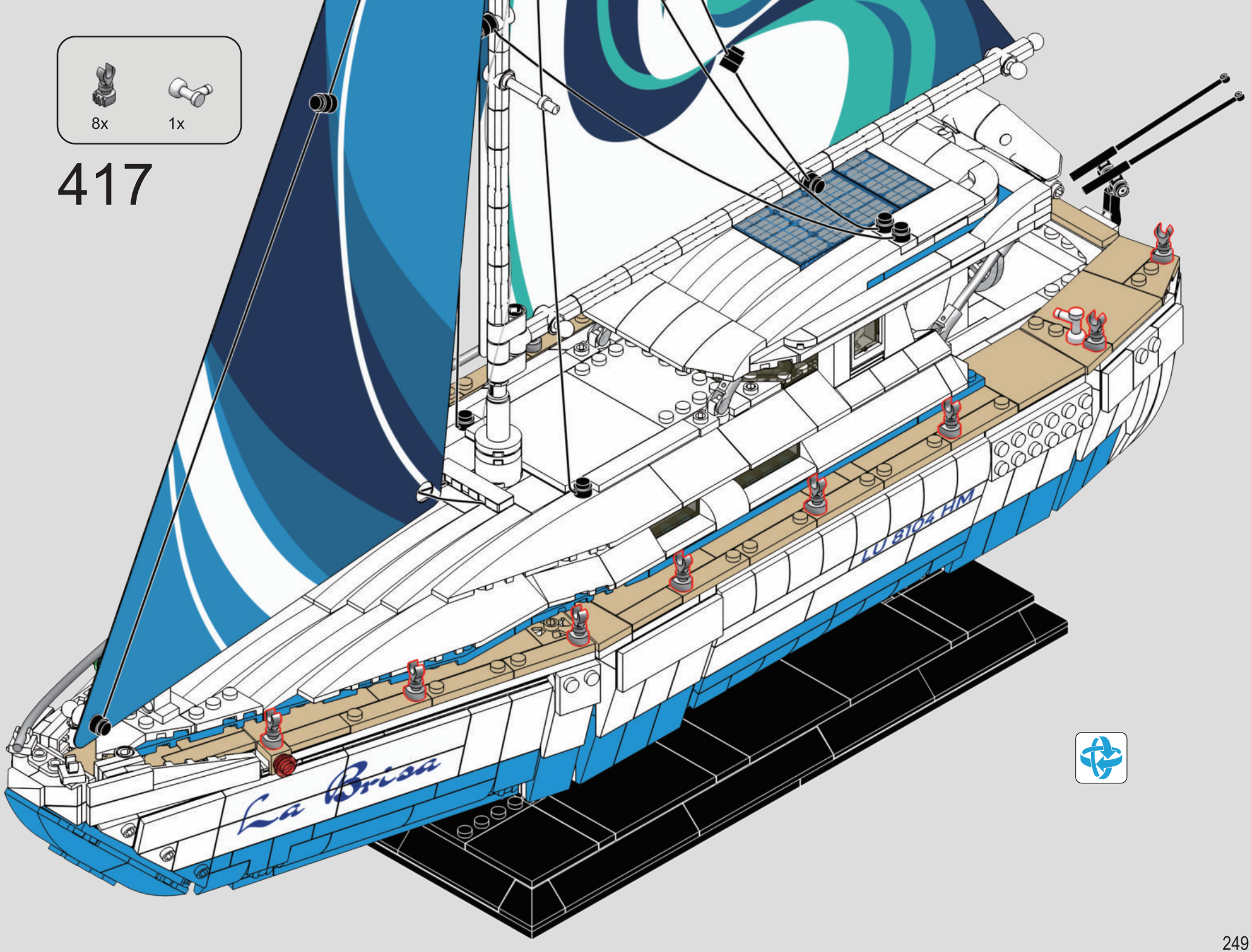
8x
1x
417
La Brisa
LU 8104 HM

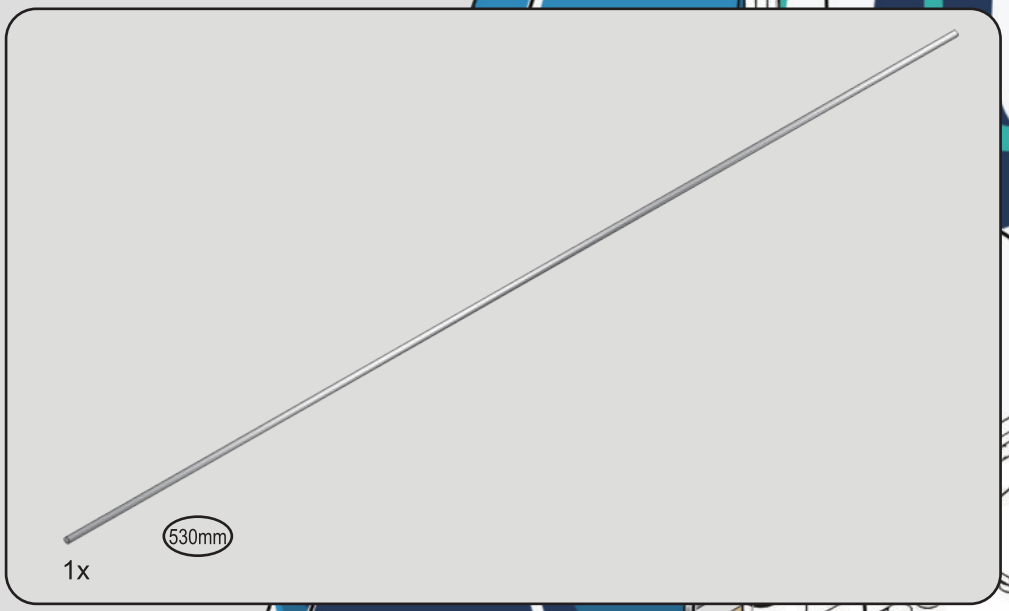

418

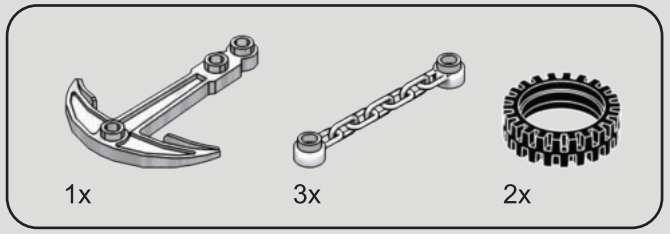

419

1

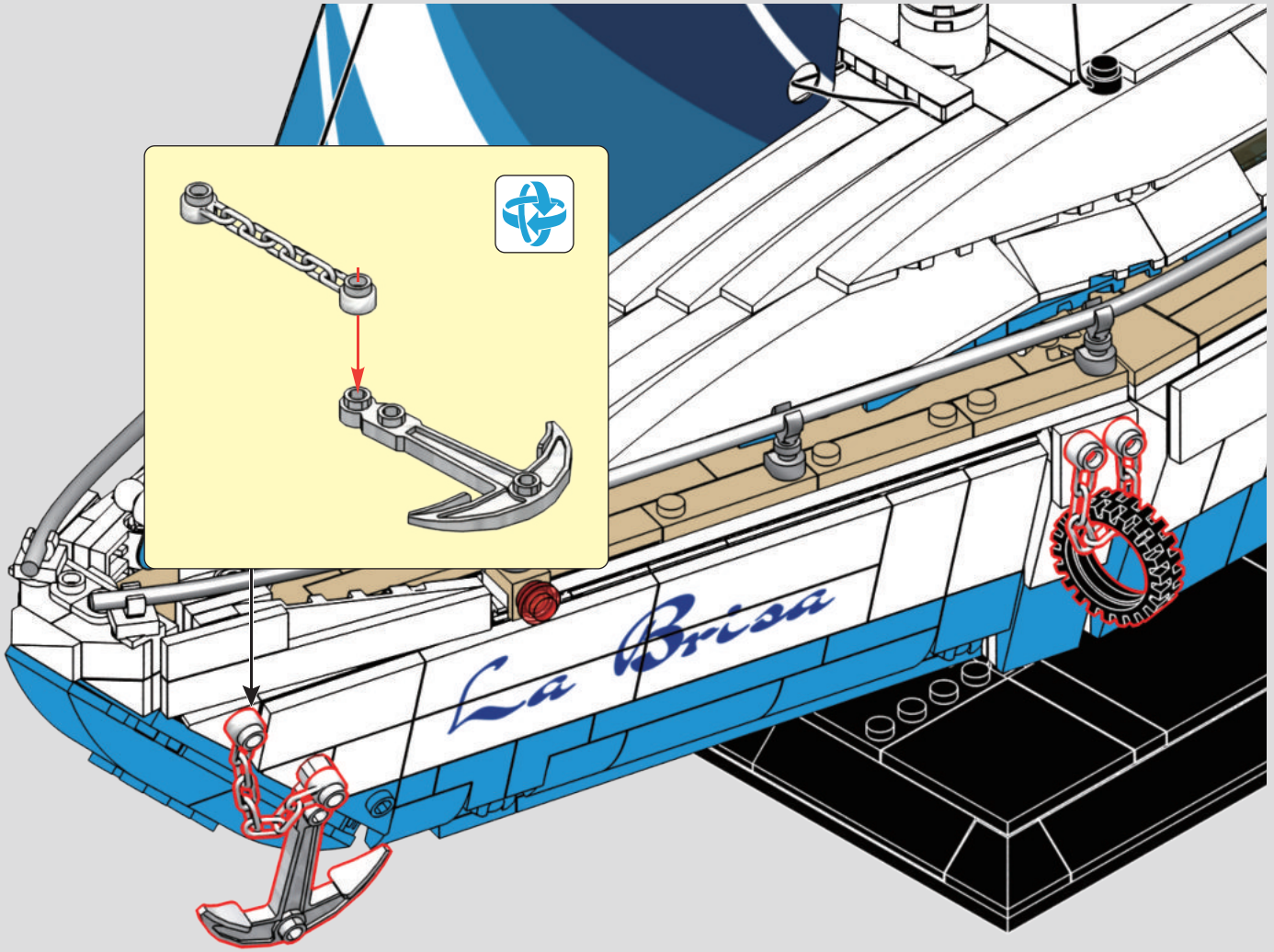

2

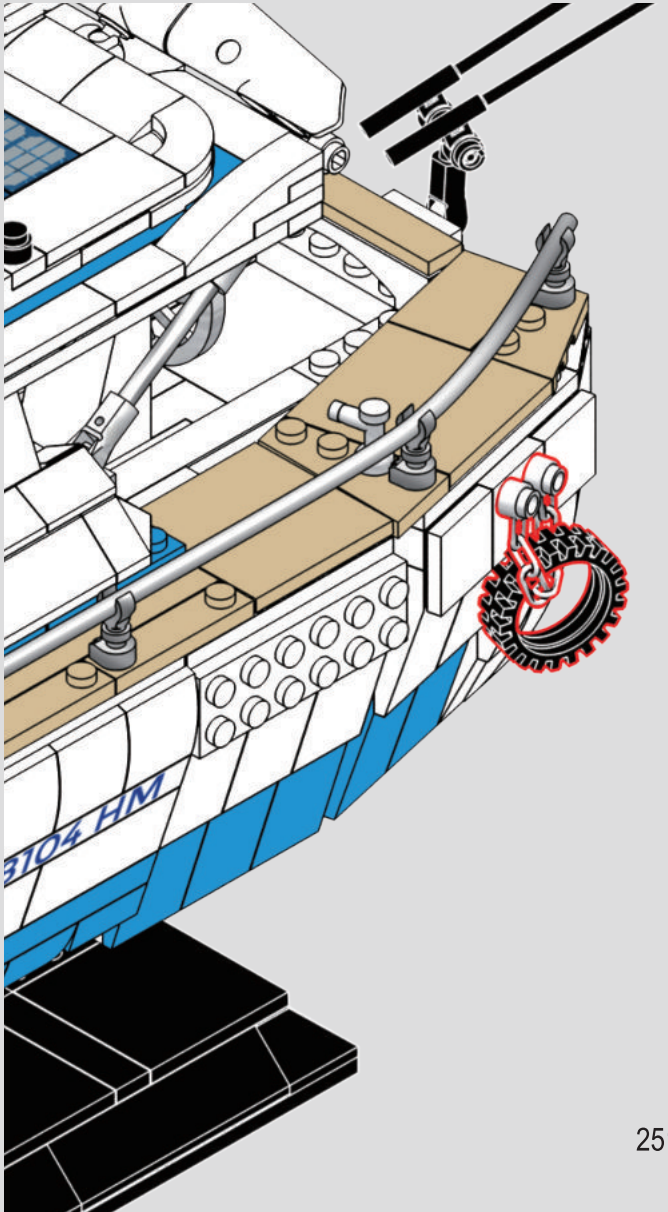

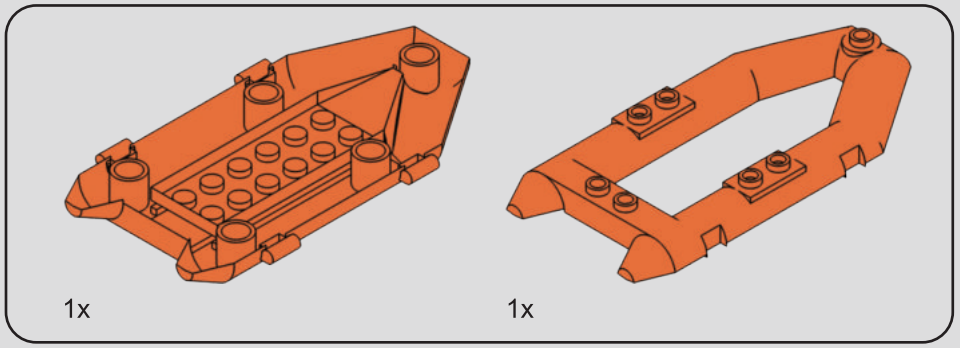

420

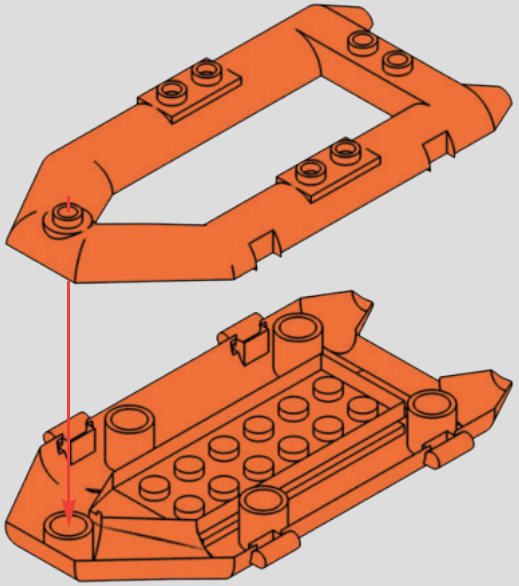

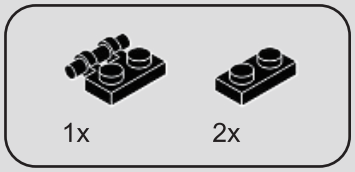

421

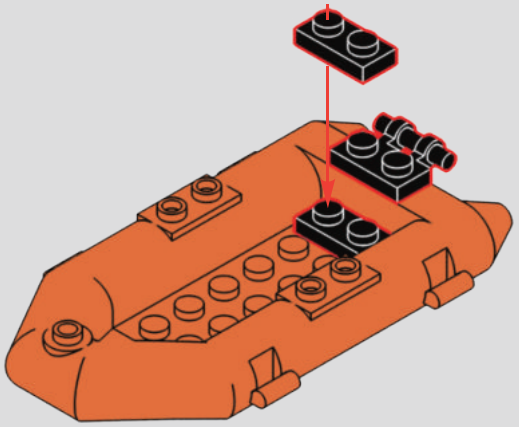

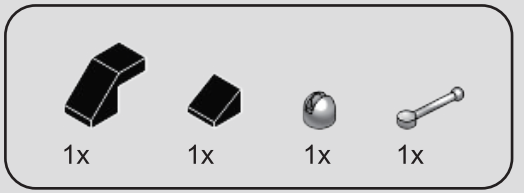

422

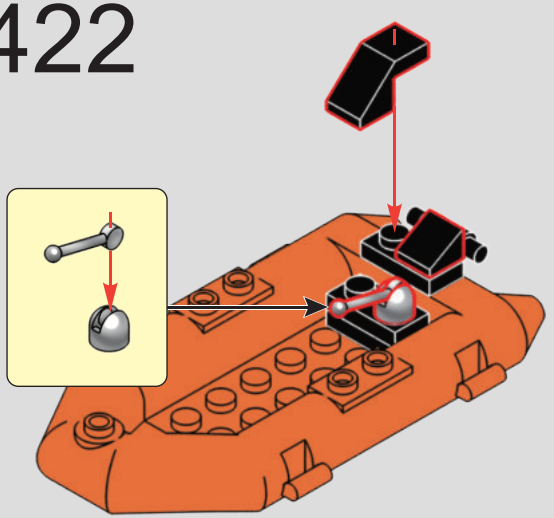

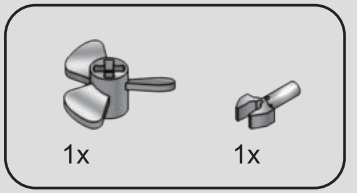

423

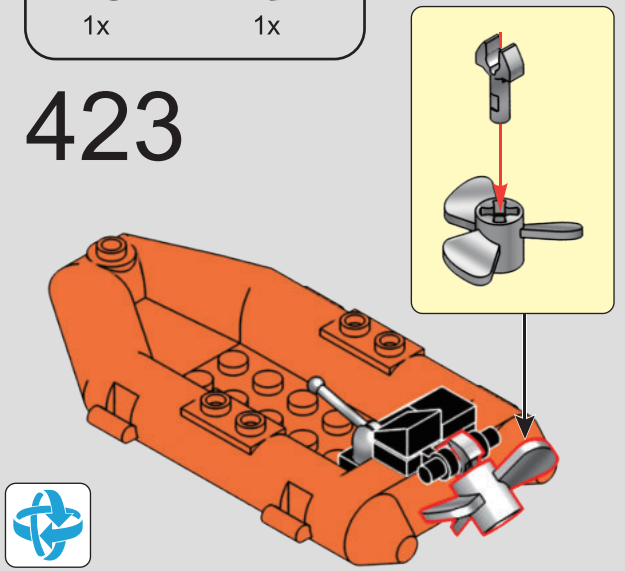

424

1

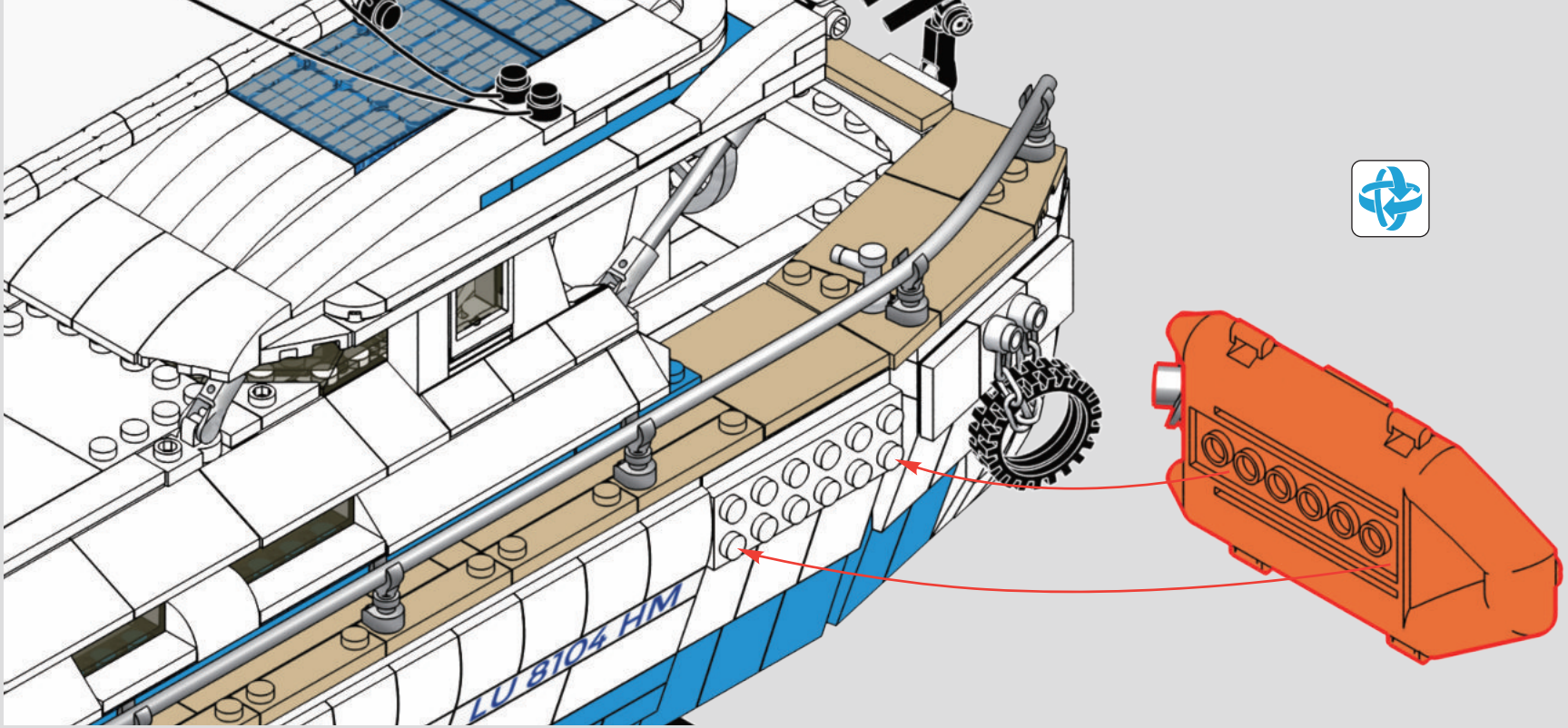

2

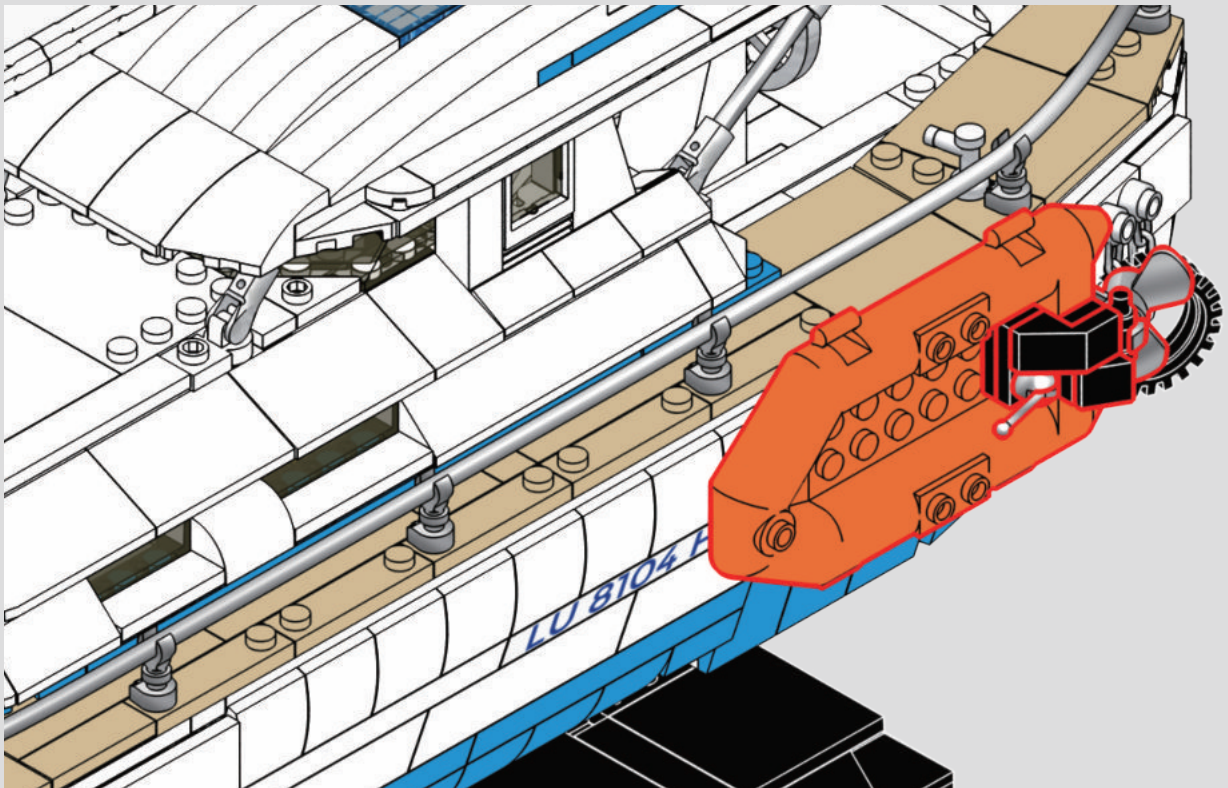

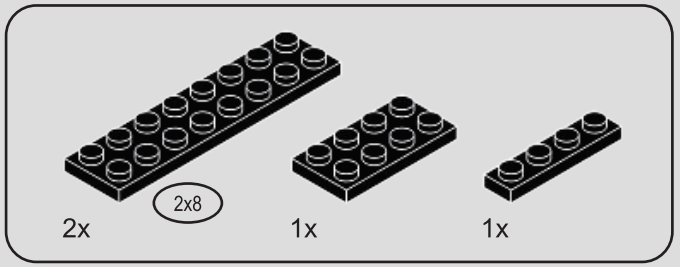
2x
2x8
1x
1x

425

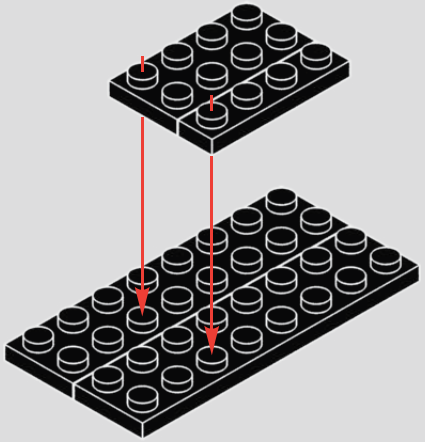

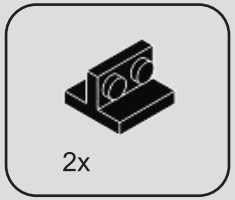
2x

426



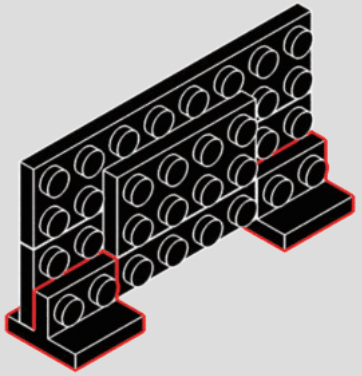

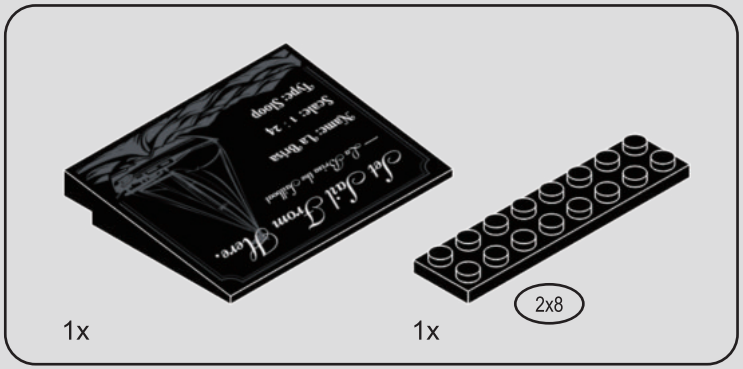
1x
1x
2x8

427


Set Sail From Here.
— La Brisa the Sailboat
Name: La Brisa
Scale: 1 : 24
Type: Sloop

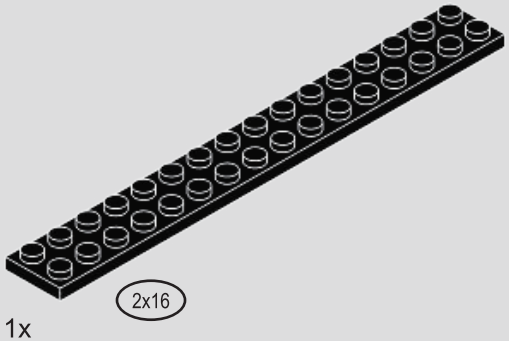
2x16
1x

428


Set Sail From Here.
— La Brisa the Sailboat
Name: La Brisa
Scale: 1 : 24
Type: Sloop

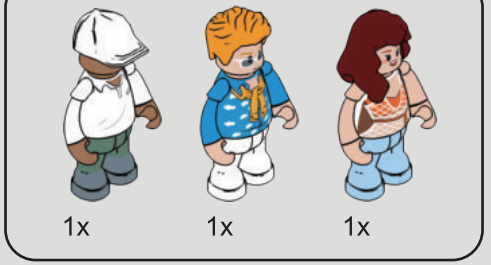
1x
1x
1x

429


Set Sail From Here.
— La Brisa the Sailboat
Name: La Brisa
Scale: 1 : 24
Type: Sloop

430

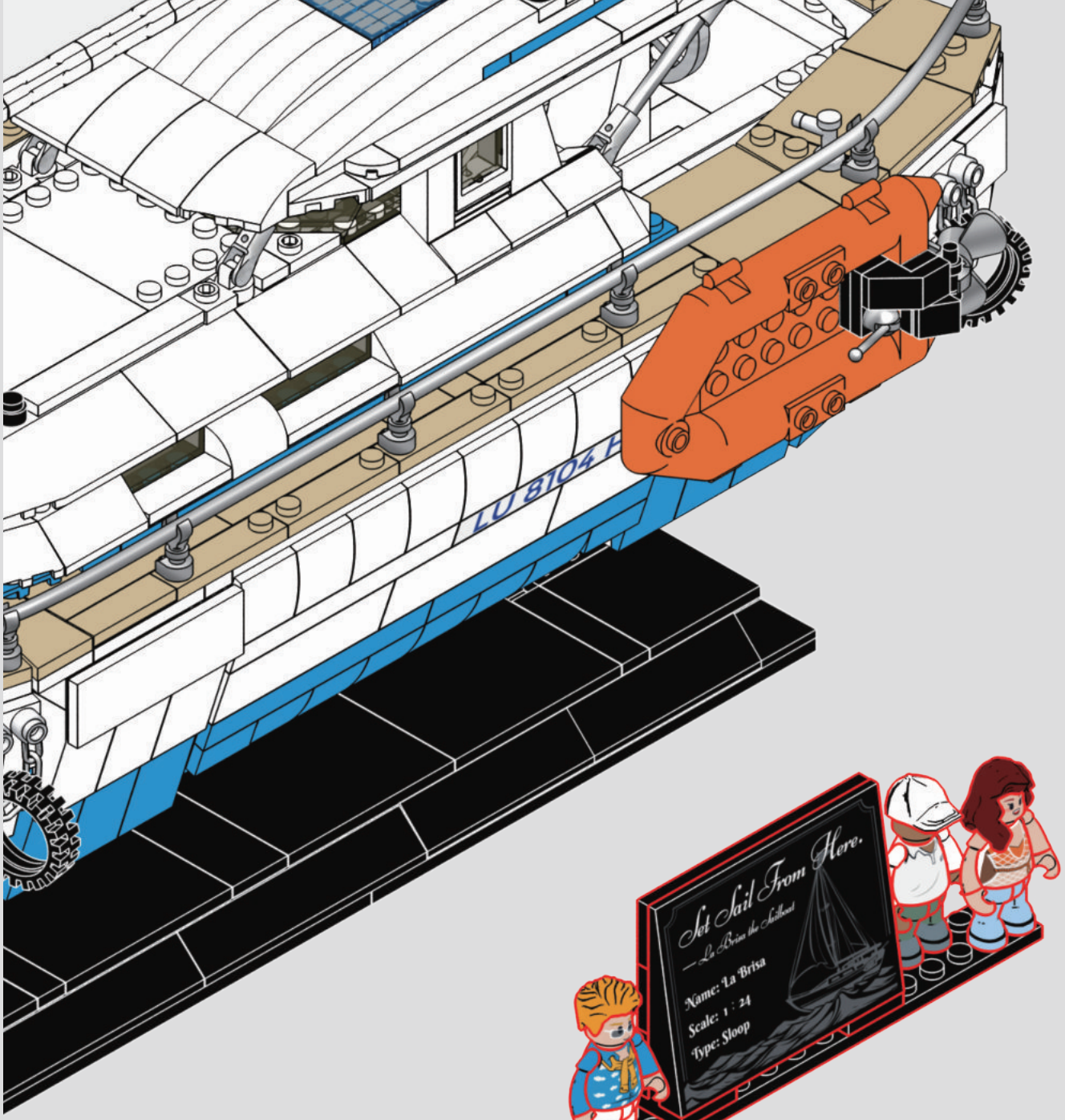
LU 8104

Set Sail From Here.
— La Brisa the Sailboat
Name: La Brisa
Scale: 1 : 24
Type: Sloop

VACATION

We value your thoughts on your purchase of our new product. Your feedback is crucial in shaping the future of this product line. Please share your opinions **with us at: https://www.funwhole.com/pages/feedback.**

We genuinely hope you're enjoying your new product, and we eagerly anticipate serving you again in the near future. Please don't hesitate to reach out if there's anything more we can assist you with.



• STREET FUSION



F9051
Skate Shop



F9058
Record Store



F9066
Graffiti Bus Stop



F9046
Chili Dog Trailer

• ROAD TRIP



F9053
Deer Crossing



F9054
Twilight Mote

• RETRO HOUSE



F9001
Wood Cabin



F9004
Lakeside Lodge



F9013
A-Frame Cabin



F9018
Hunting Cabin



F9022
Lookout Campground



F9041
Ski Lodge

• FARM LIFE



F9029
Farm Store



F9059
Home Greenhouse



F9062
Bee Farm



F9037
The Cow Barn

• STEAMPUNK WORLD



F9017
Steampunk Trading Center



F9047
Steampunk City Bridge



F9007
Steampunk Train Station



F9050
Steampunk Flying Club

• TOWN LIFE



F9033
Antique Store



F9031
Book Cafe

V1.1

Funwhole and the funwhole logo are
trademarks of the funwhole group.

WWW.FUNWHOLE.COM 