
VINEYARD ESTATE
FARM LIFE
16010
2800PCS
16+
Rossi's Winery
EST 1888
VINEYARD
Scan the QR code
for a PDF instruction
扫码关注公众号
获取电子版说明书

ABOUT LUMIBRICKS

Welcome to Lumibricks, where imagination meets illumination in the brick world!

Formerly known as FUNWHOLE, the world's first lighting bricks manufacturer, Lumibricks continues its legacy as a trailblazer in the world of building brick sets with a unique twist - integrated lighting that transforms every creation into a radiant masterpiece.

Every Lumibricks' set celebrates the joy of building and the magic of illumination. Whether you're crafting intricate architectures or imaginative scenes, the design details and lighting features bring the sets to life, and also bring you joy and shine whether it is the day or night.

At Lumibricks, we believe in the power of light to transform and elevate. With our slogan, "Delight day and night," we invite you to explore the possibilities of illuminated brick sets. Discover a hobby that doesn't just shine - it glows with your inner creativity.

欢迎来到Lumibricks灯搭的乐园

在这里，我们不仅仅是玩具制造商，我们还是创造快乐的艺术家。

自2014年诞生起，Lumibricks灯搭（原FUNWHOLE）就坚守一个独特的愿景：在日与夜的交替中，为我们的玩家揭示积木之美的无限可能。

作为全球领先的灯光积木品牌，本着充分表现积木套装整体之美的初衷，Lumibricks致力于灯光积木套装产品的开发，将积木与灯光合为一体。

Lumibricks不仅仅是一套普通的积木，更是代表了一种全新的玩乐方式，每一块积木，每一束光线，都承载着我们带给全球数百万家庭更多欢笑的承诺。

我们相信，积木有灯，生活有光，让Lumibricks与你一起，拼搭出更多乐趣，创造属于你的灯光宇宙。


6
S

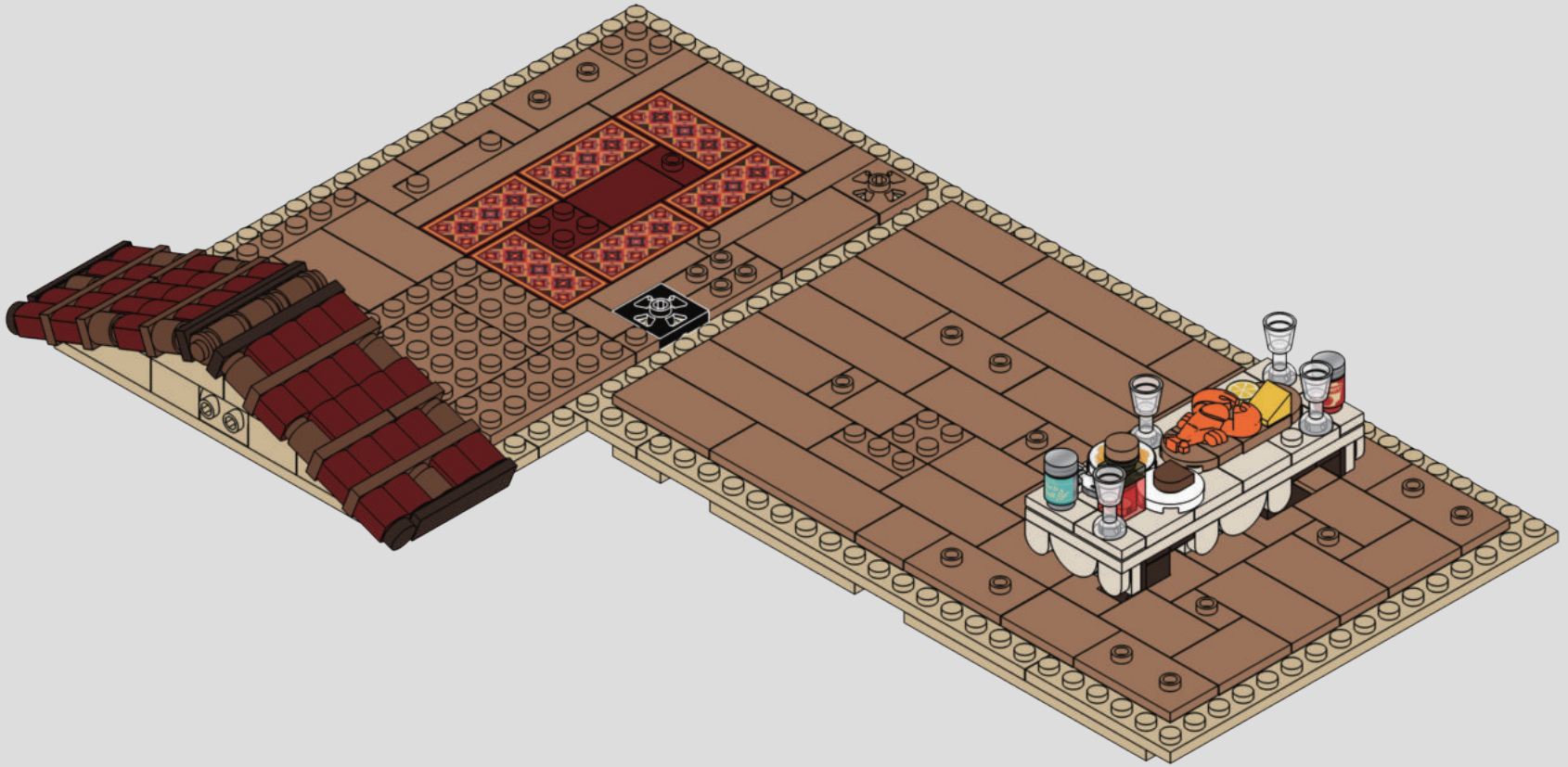



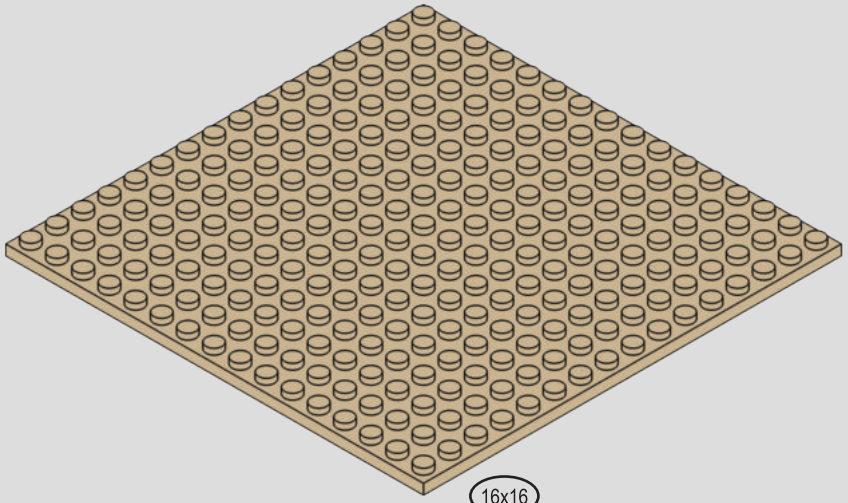

1x

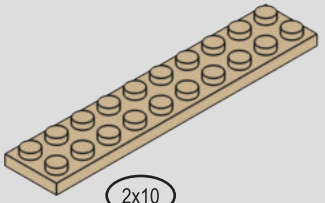

1x

1

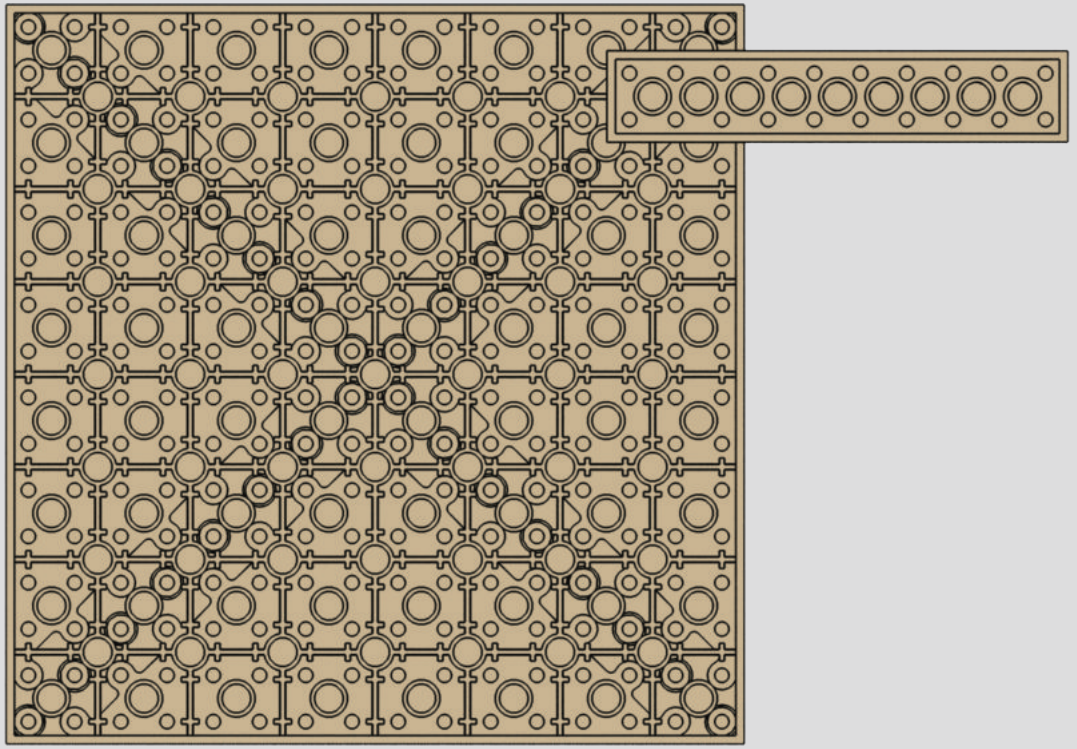

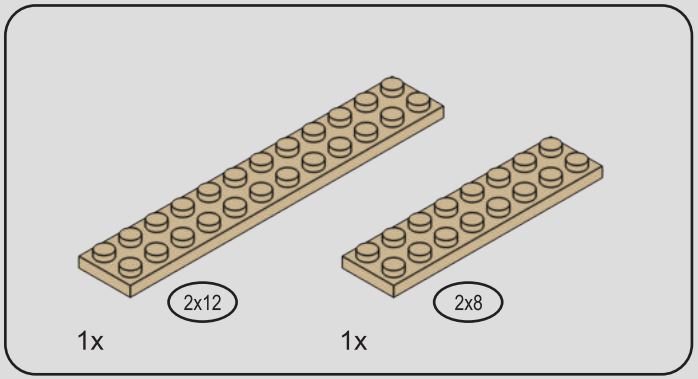

2

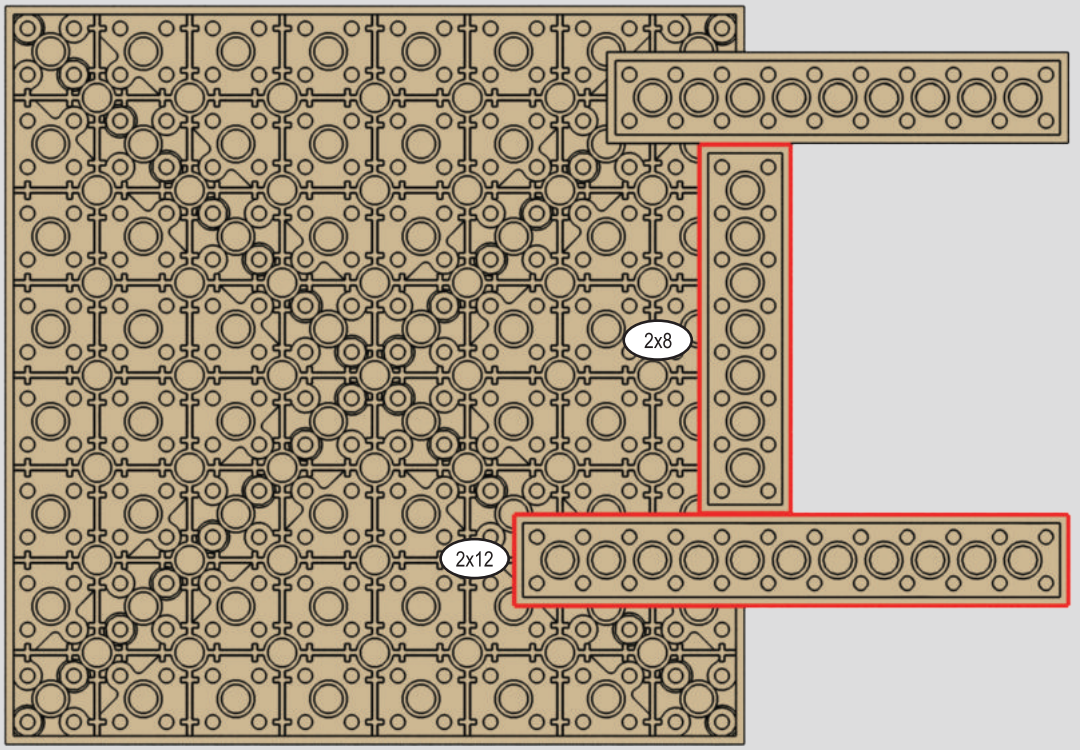

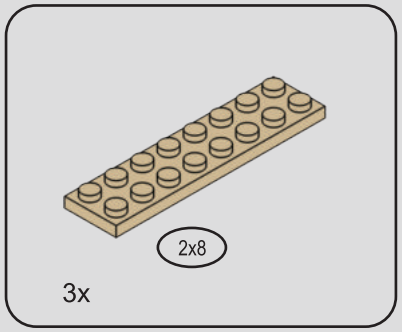

3

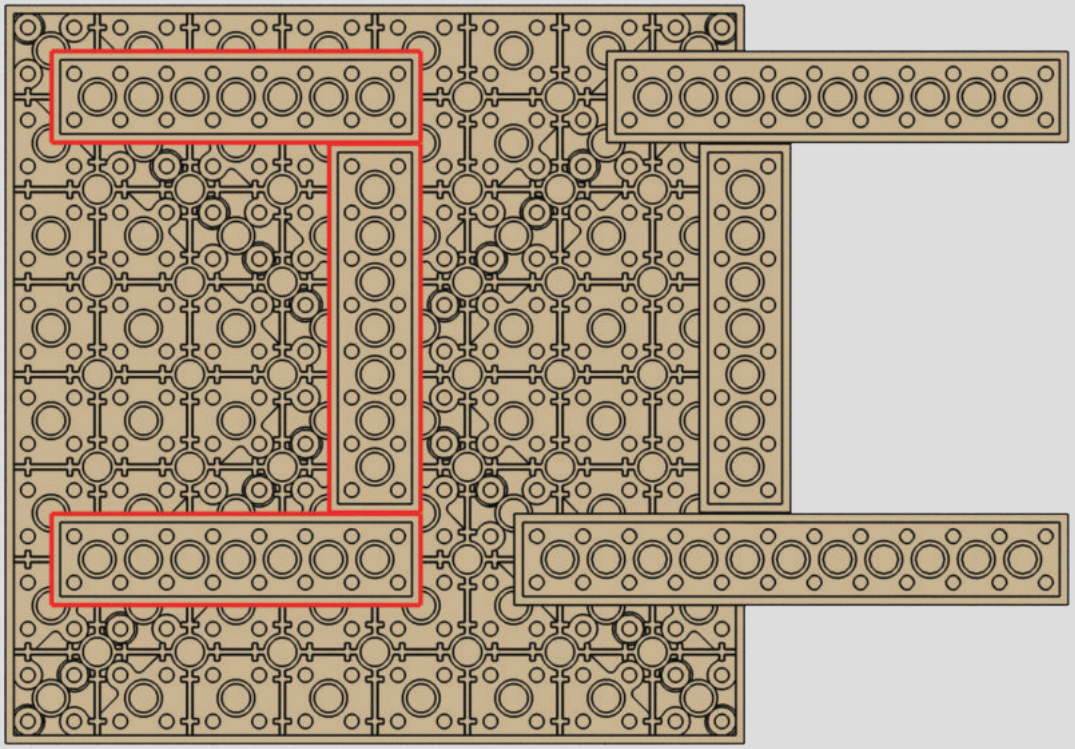

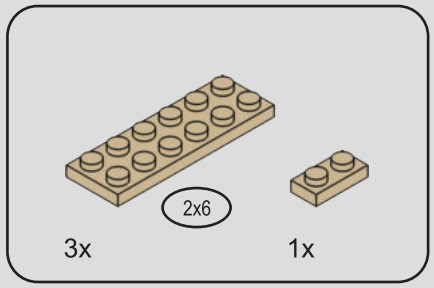

4

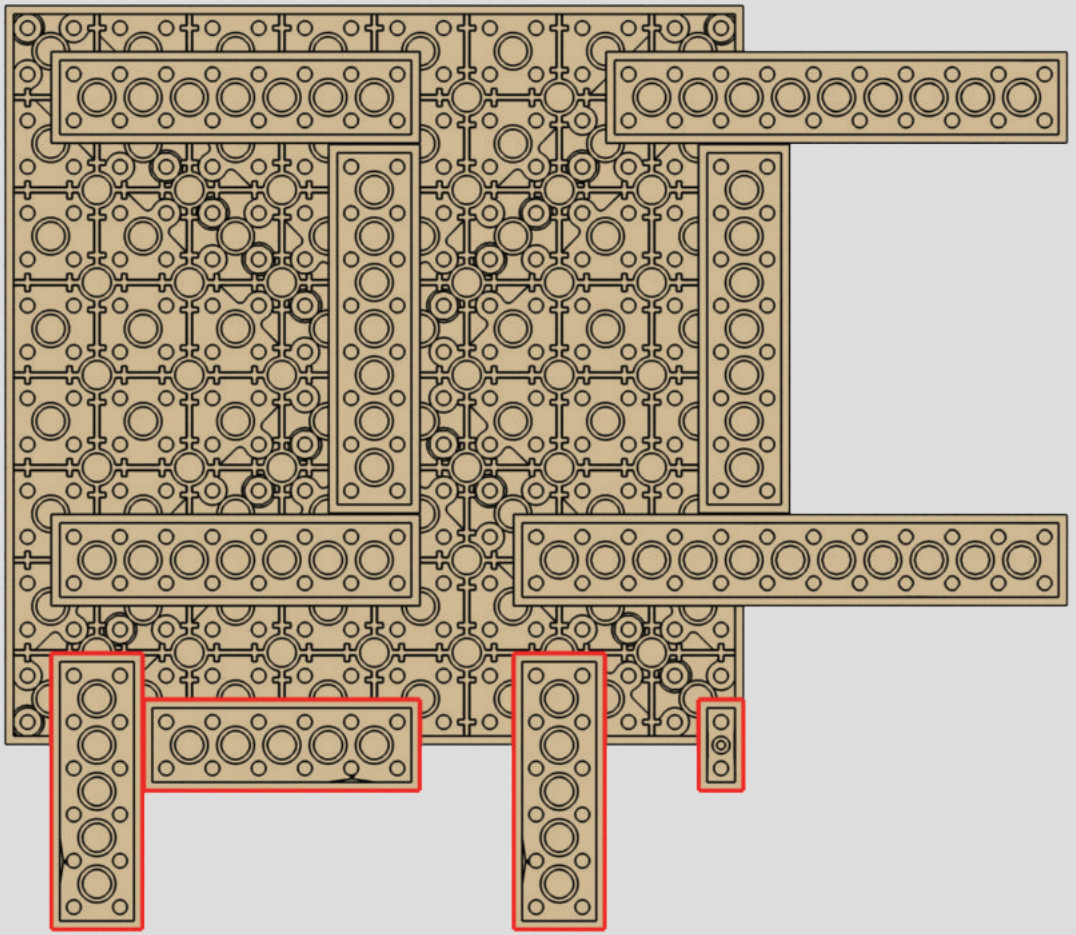

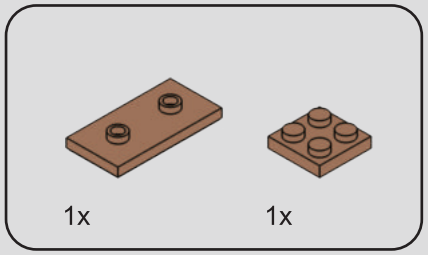

5

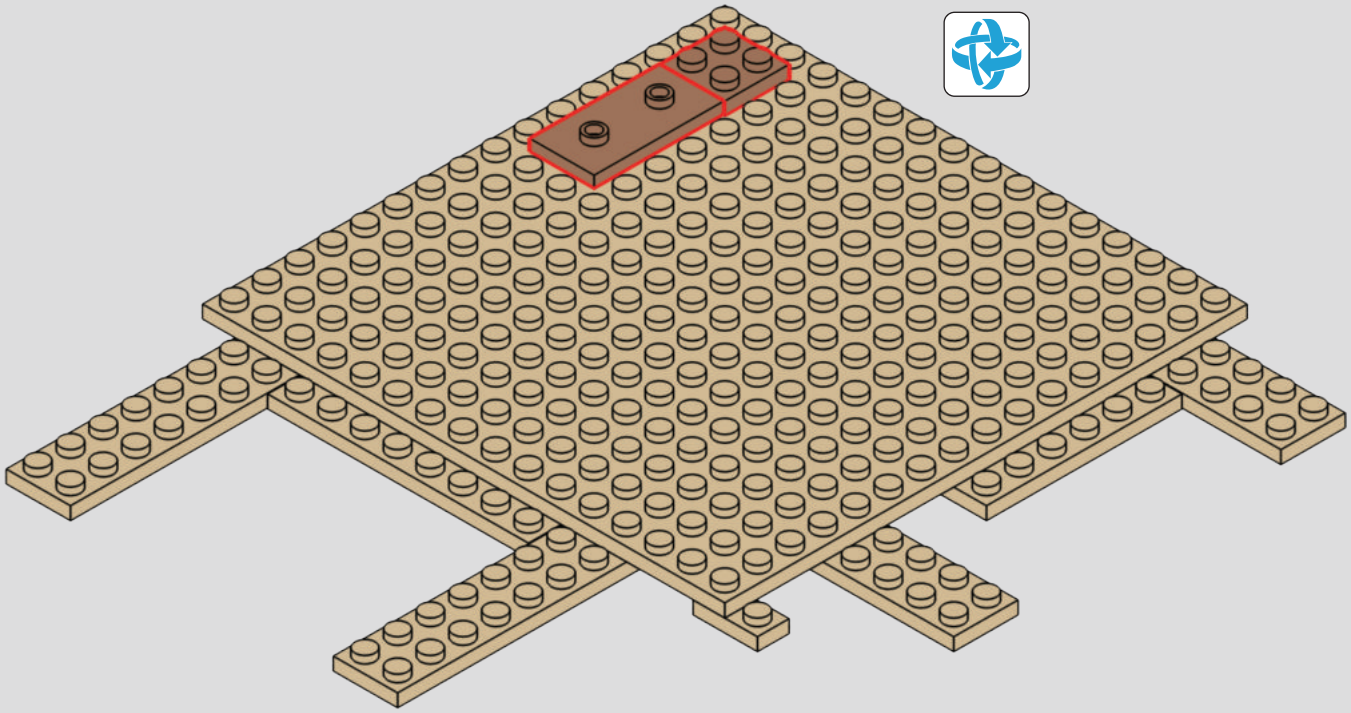

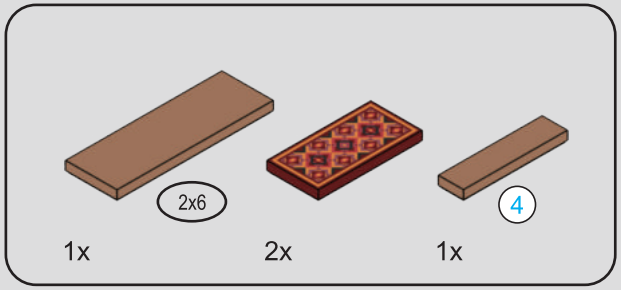

6

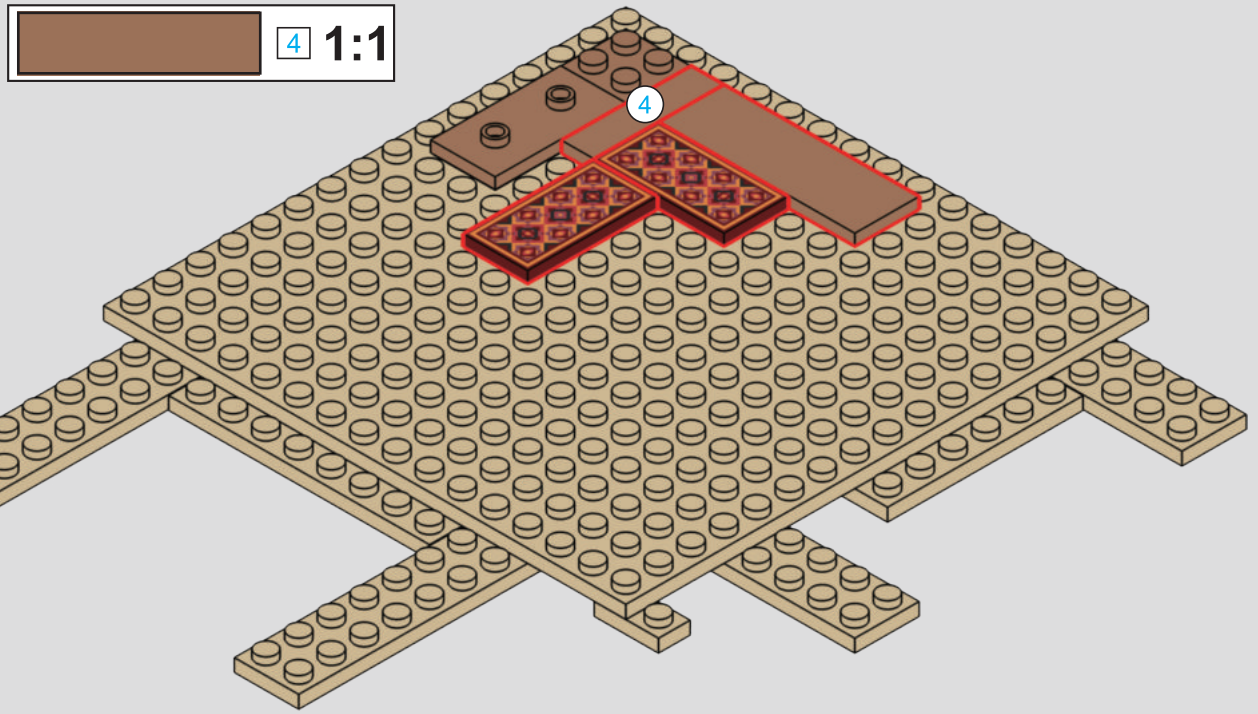

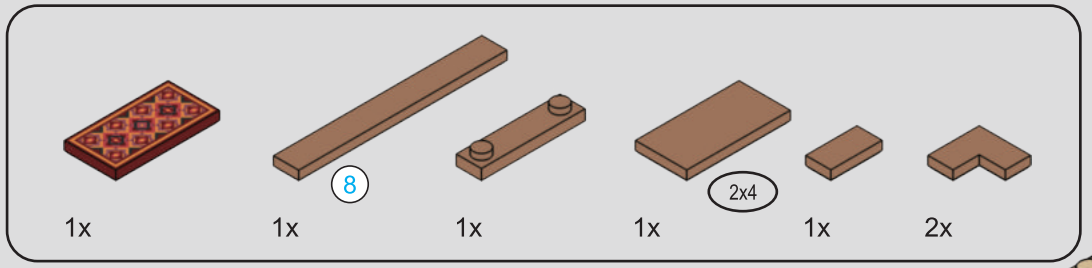

7

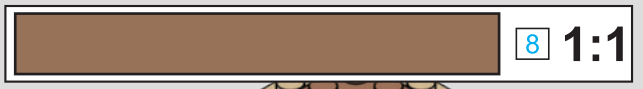

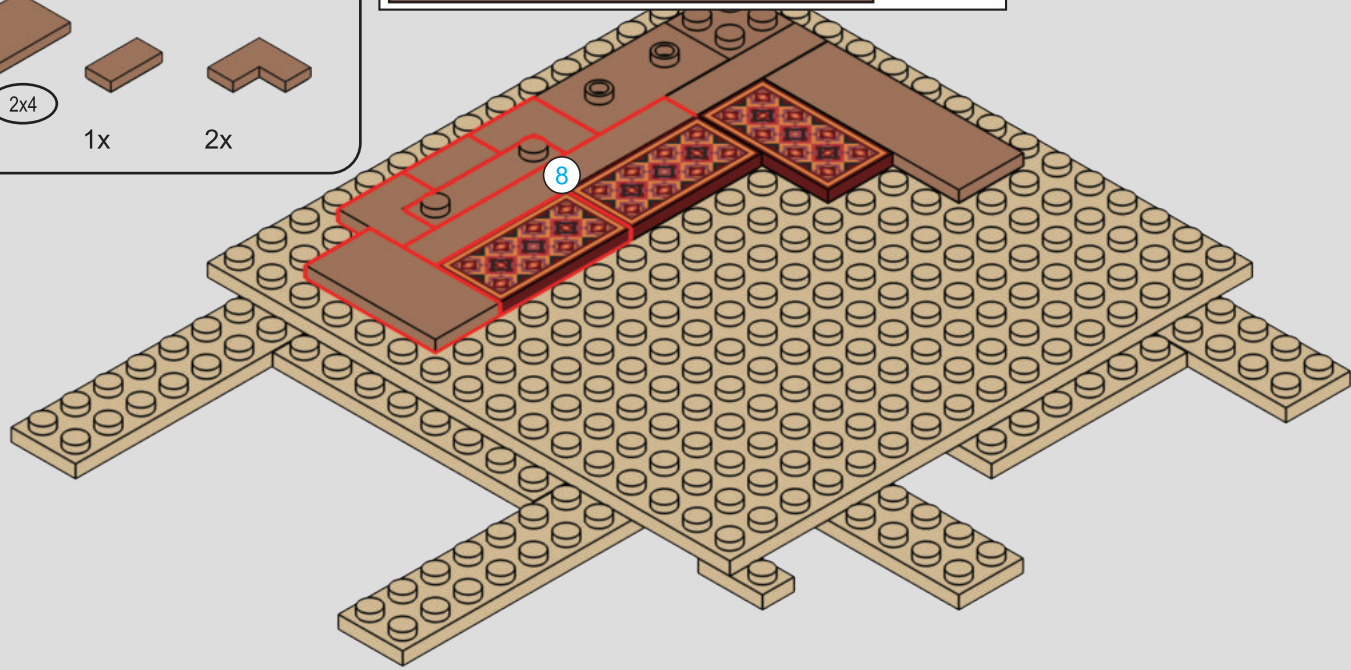

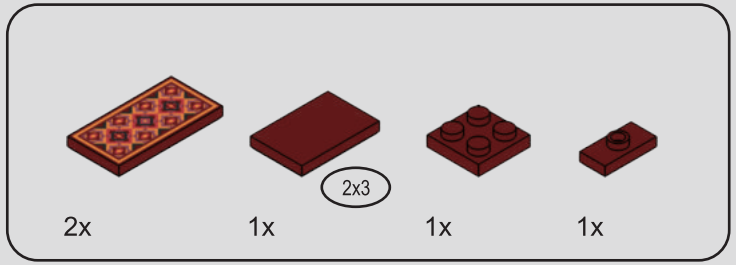

8

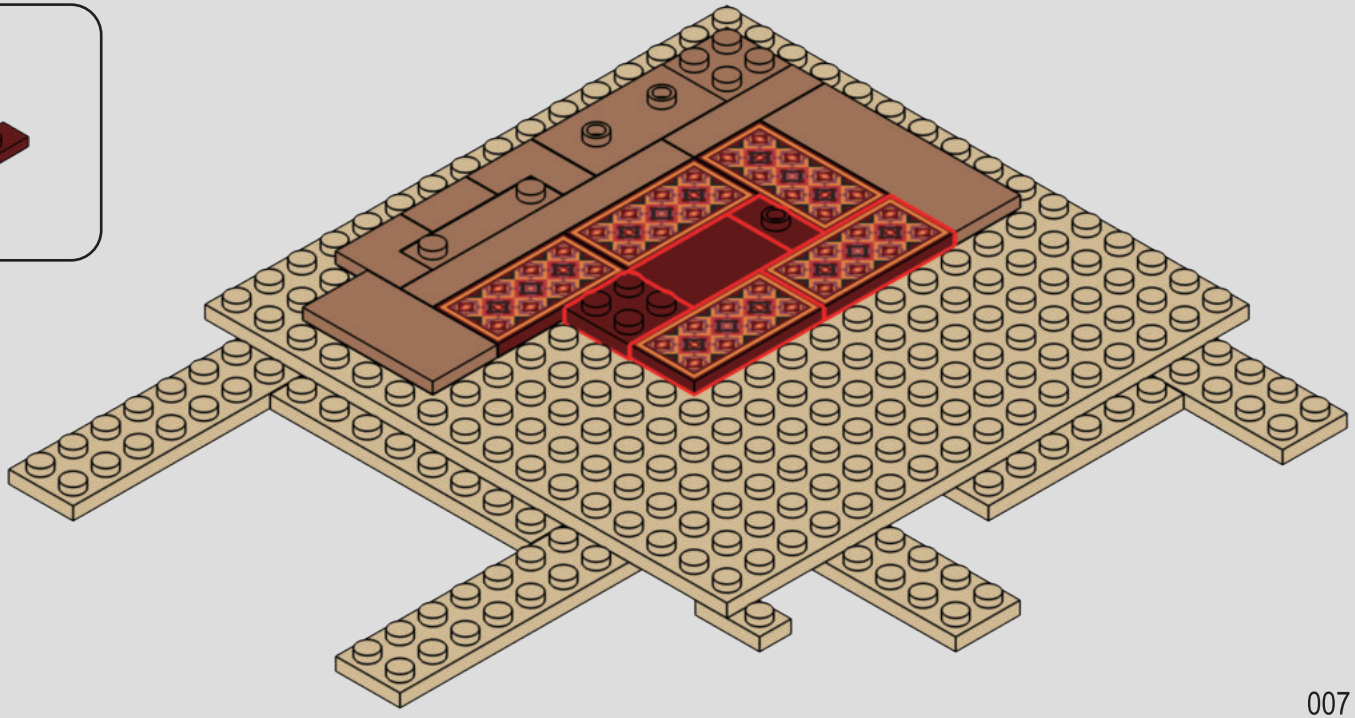

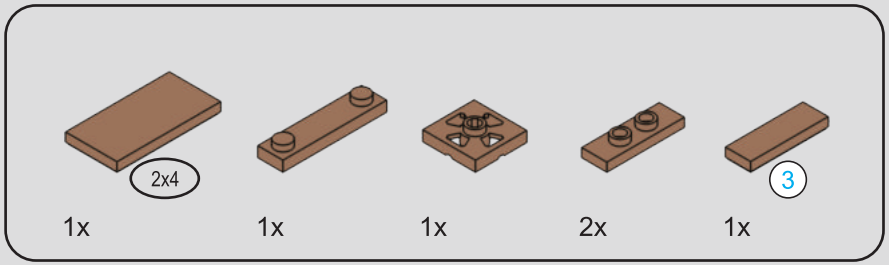

9

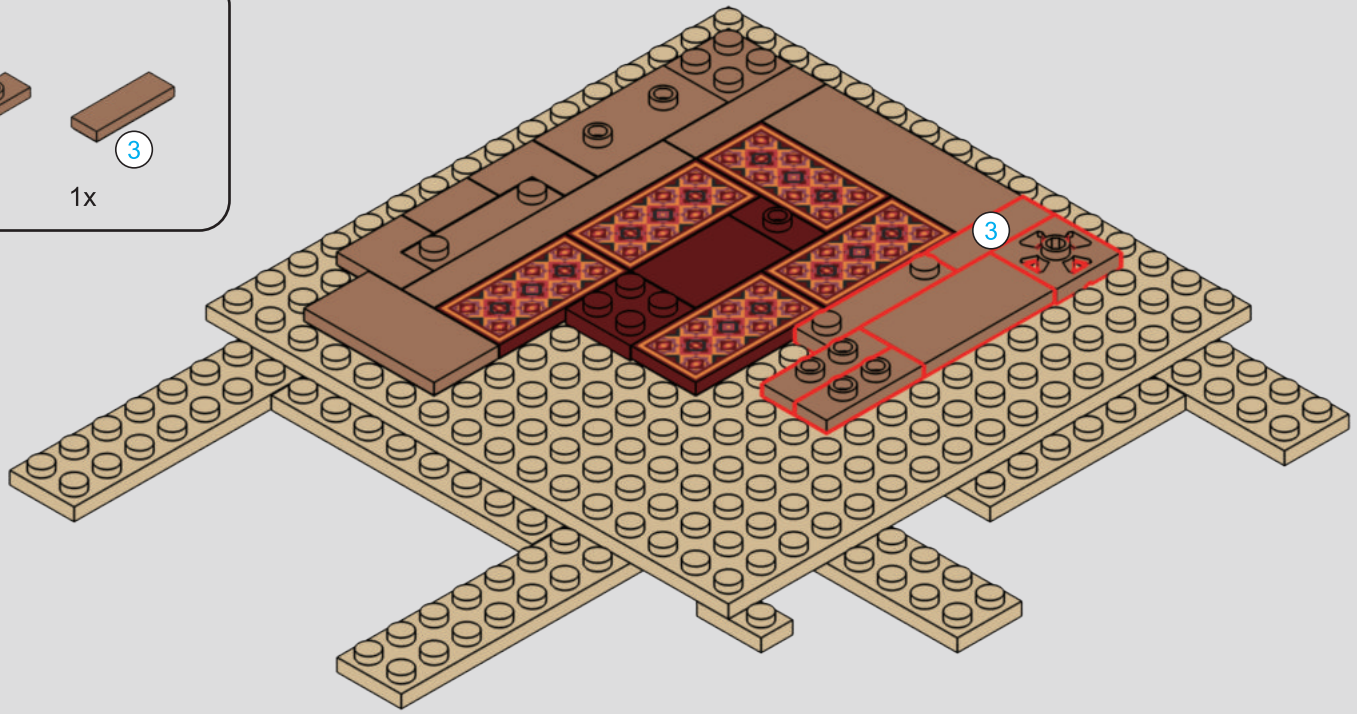

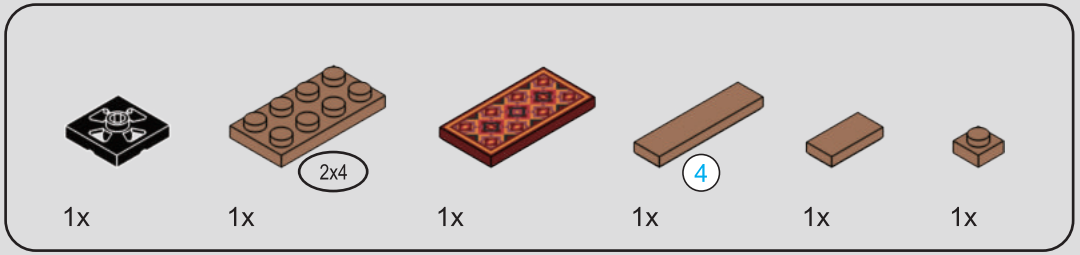

10



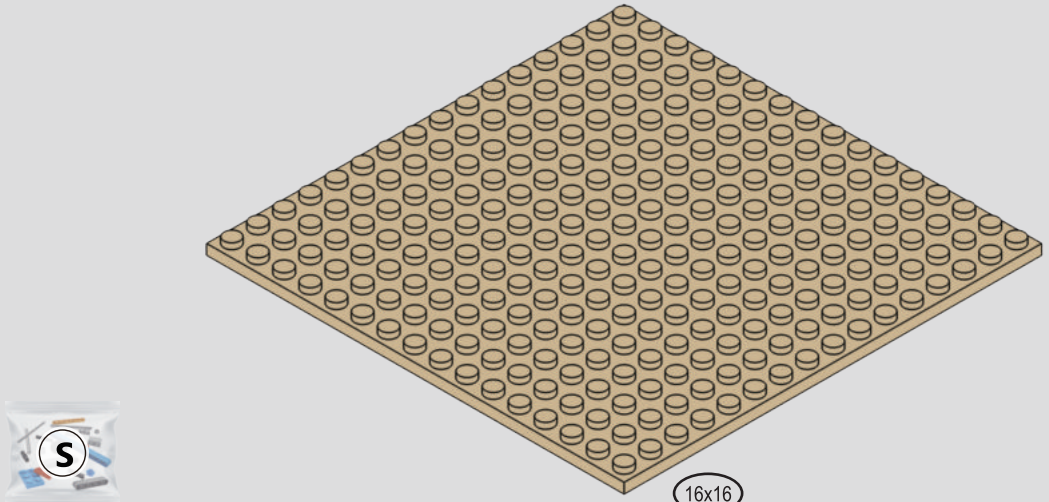

1x

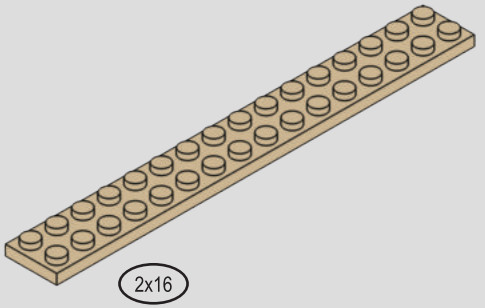

1x

11

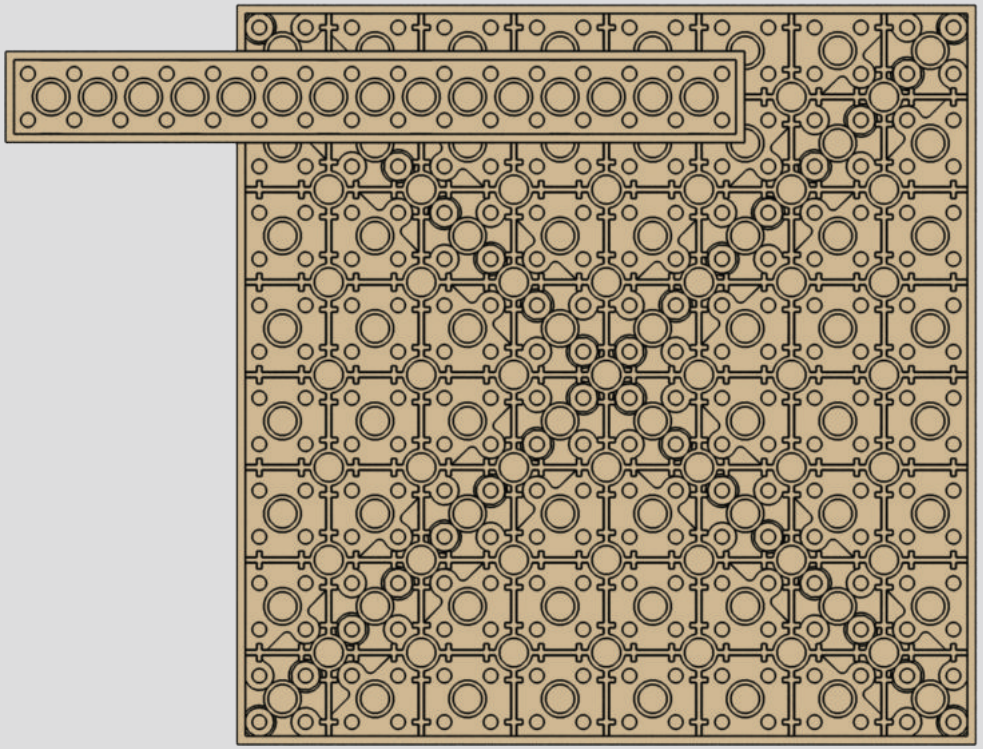

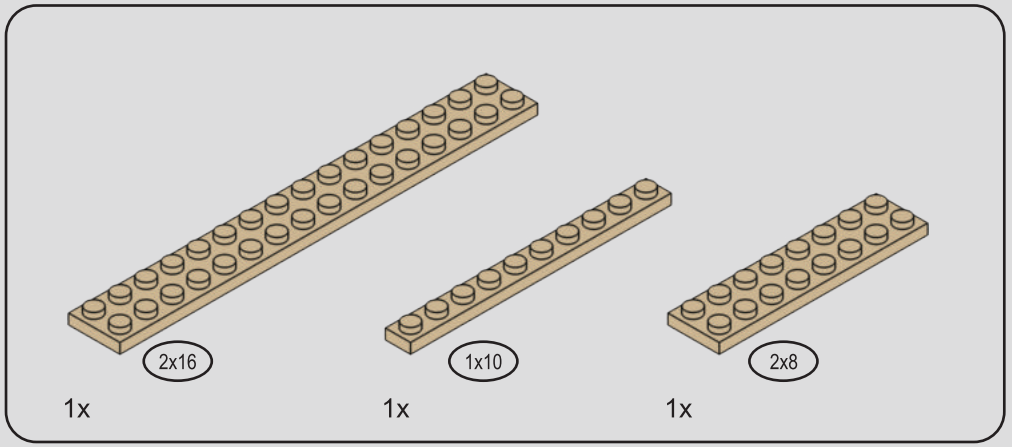

12

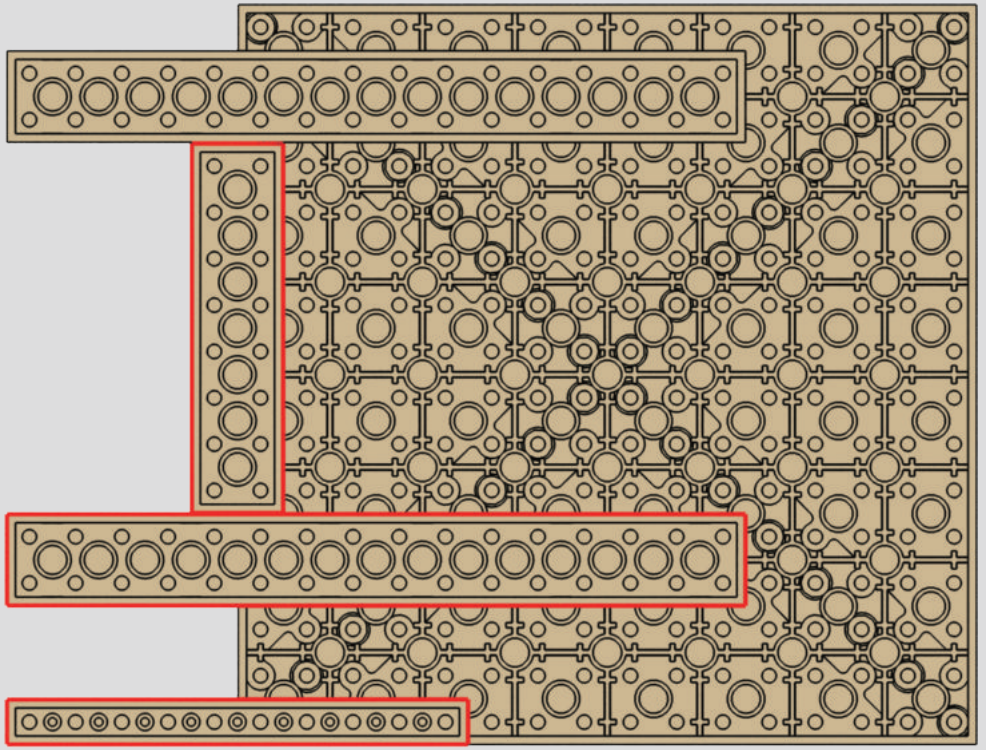

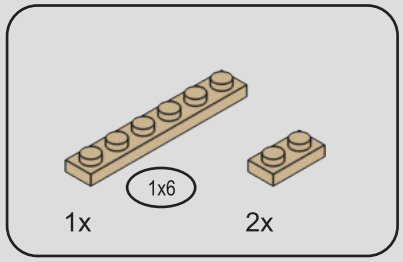

13

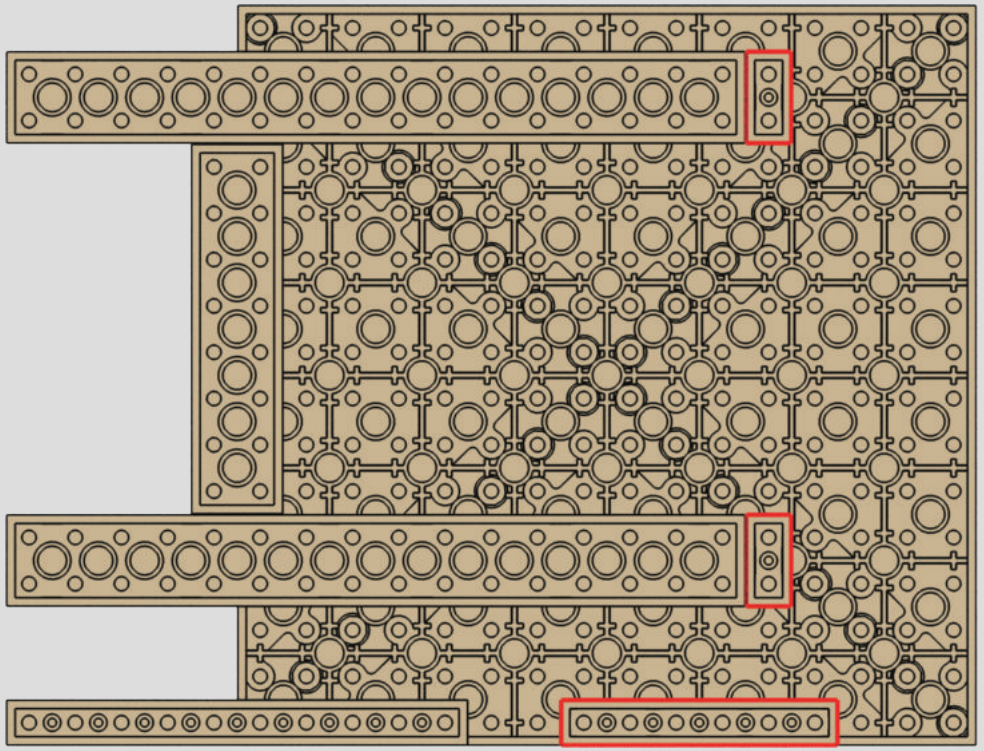

14

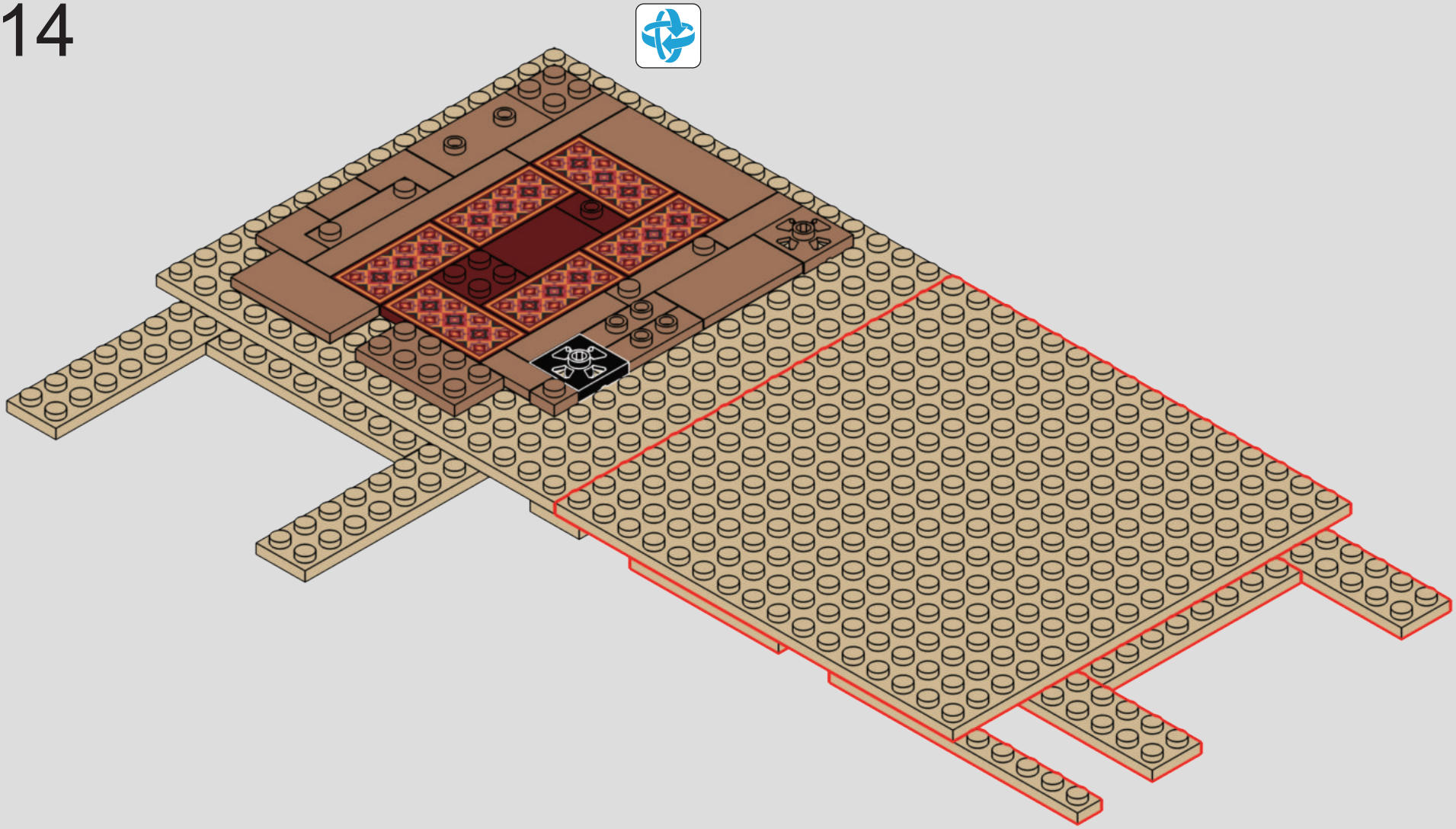

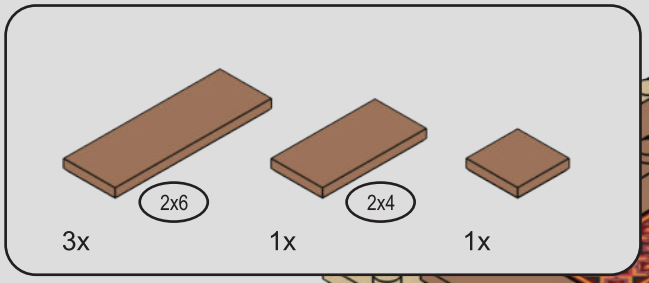

15

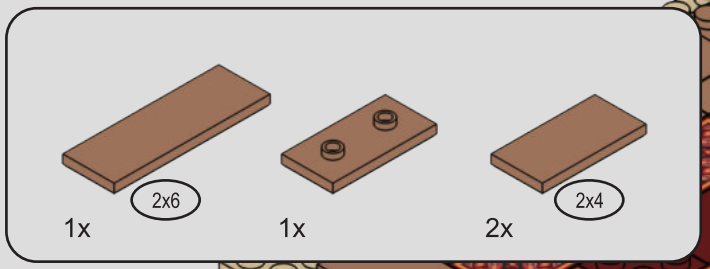

16

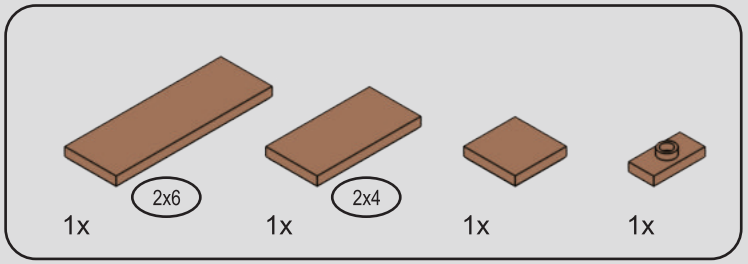

17

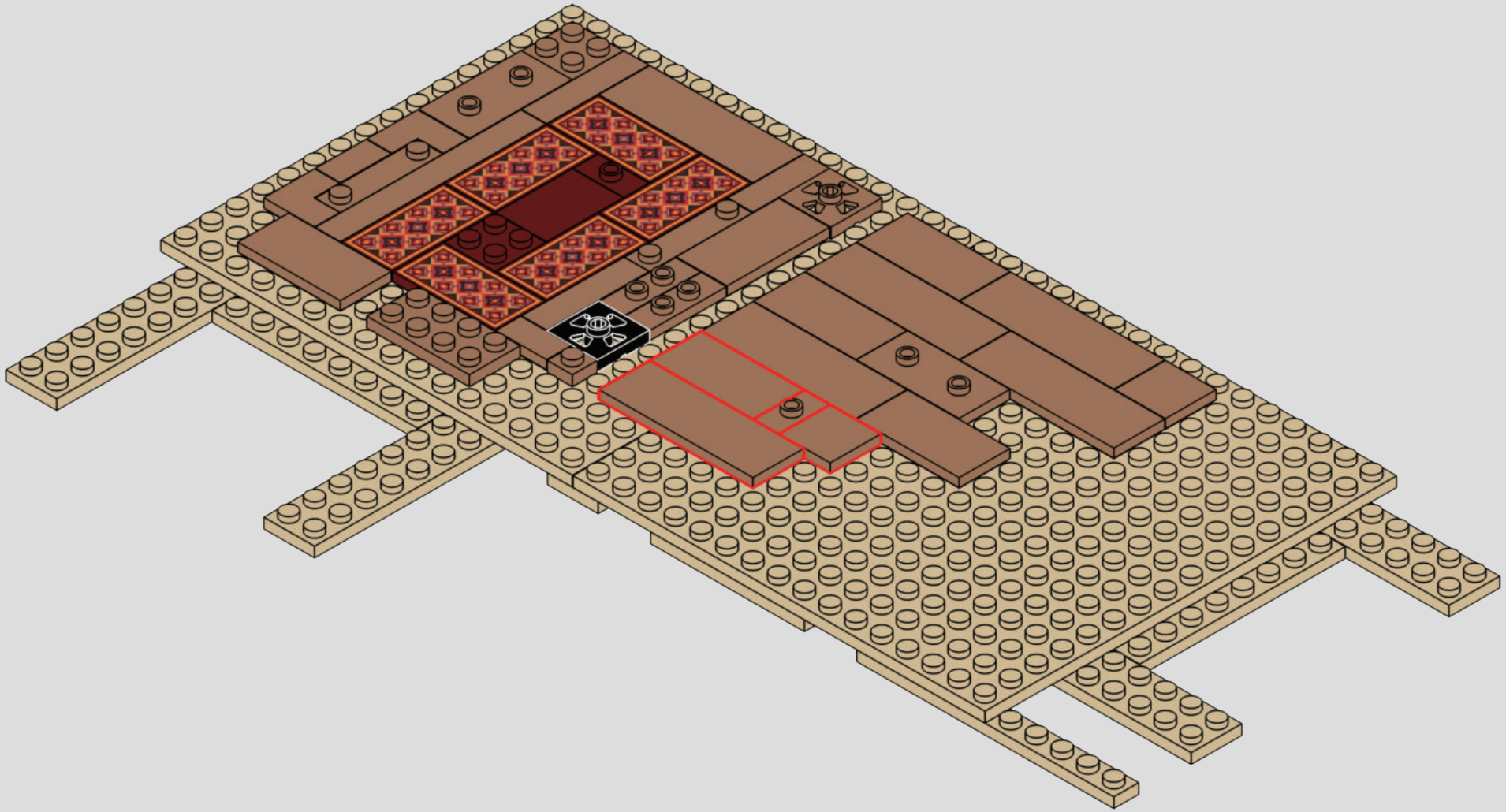

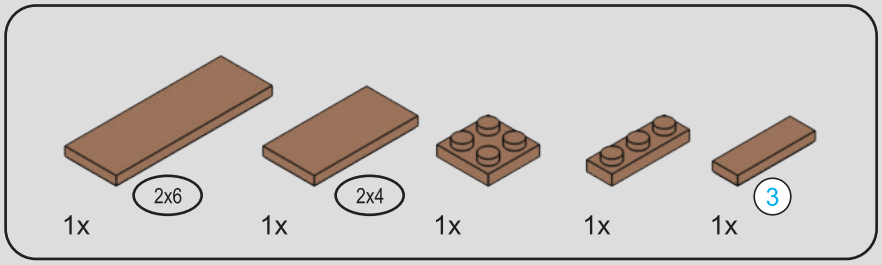

18

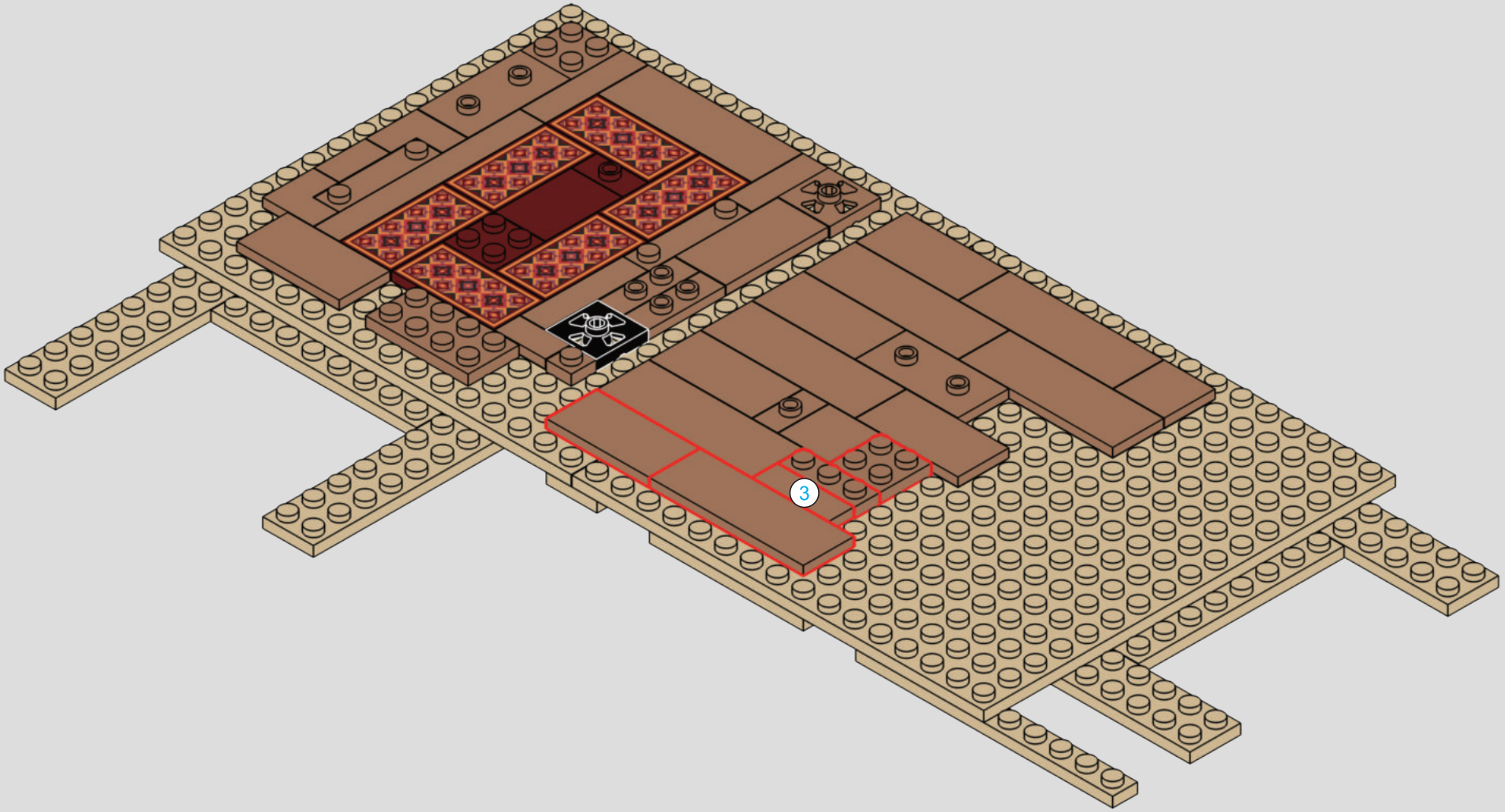

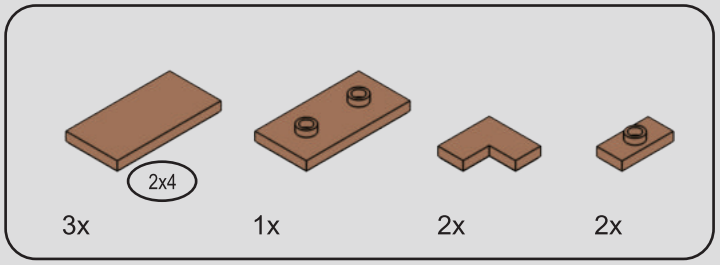

19

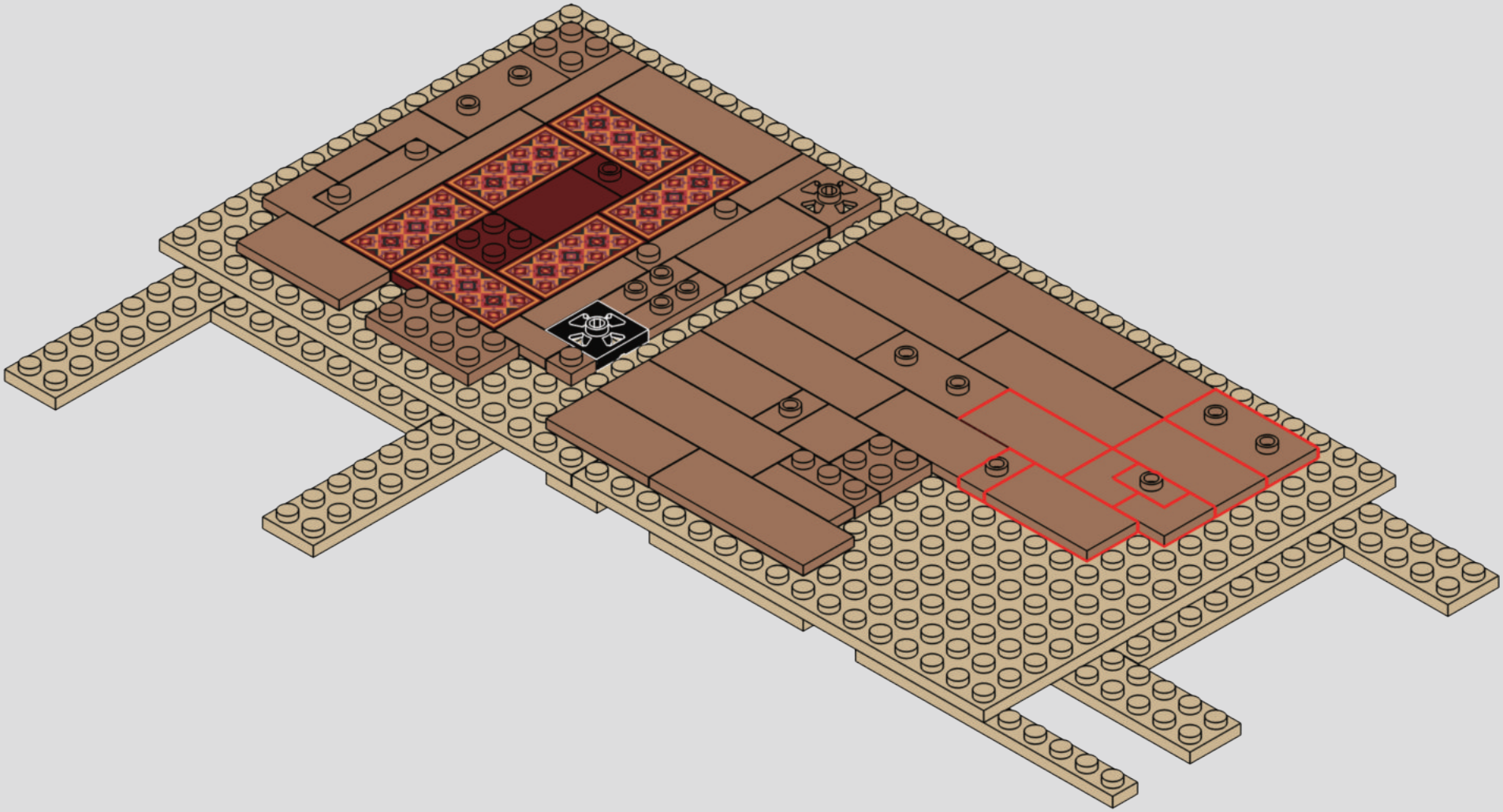

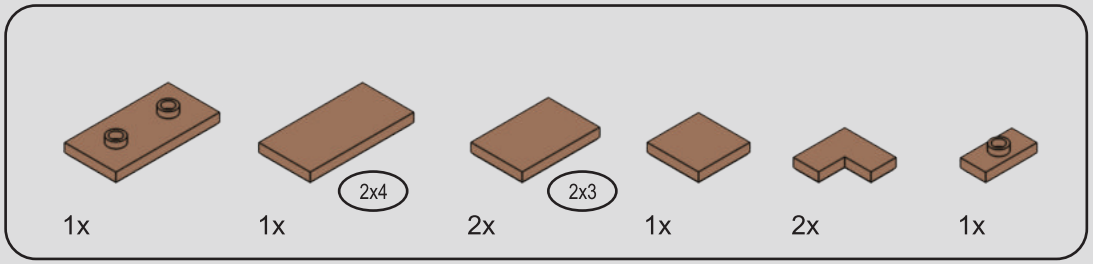

20

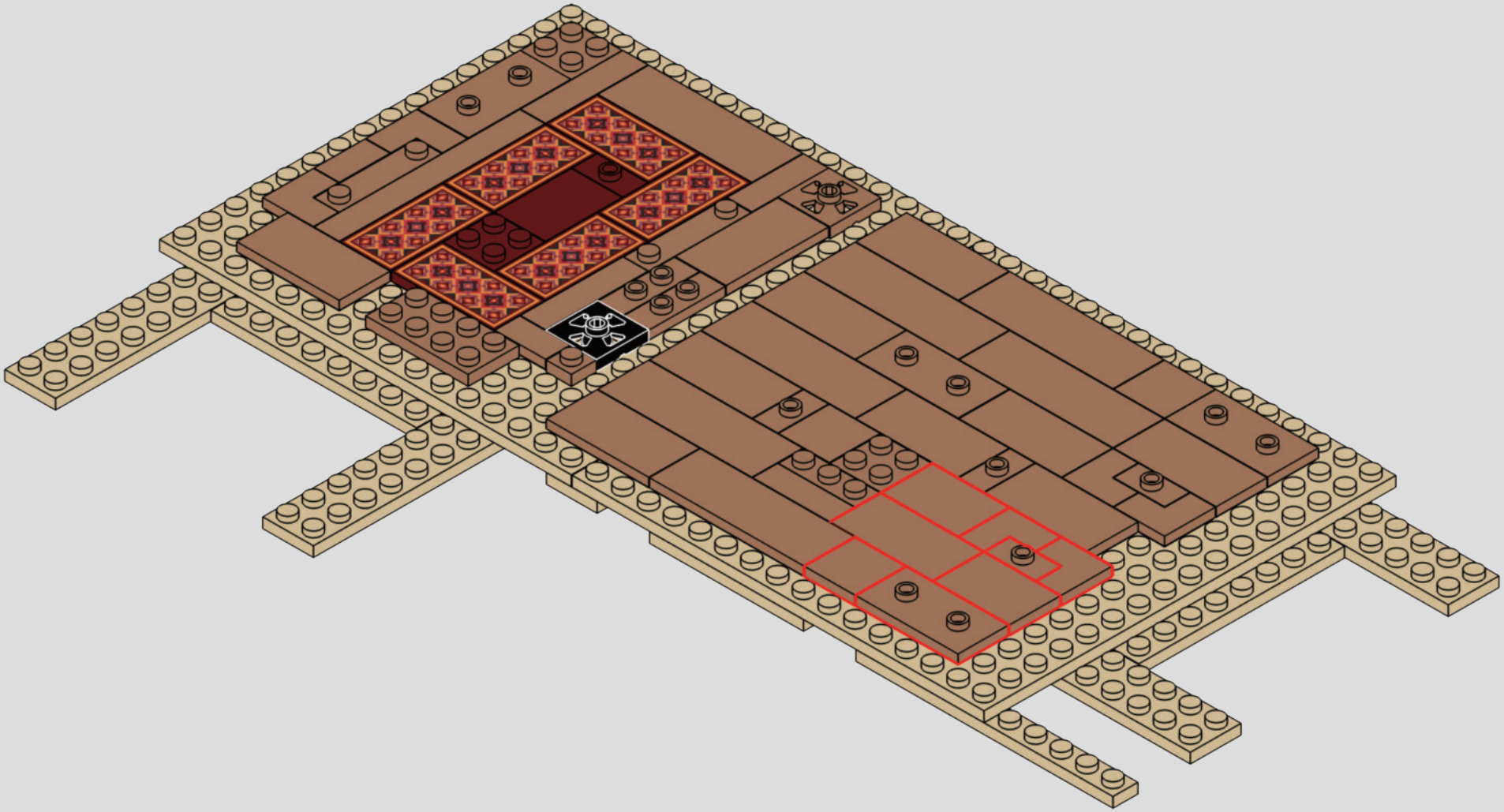

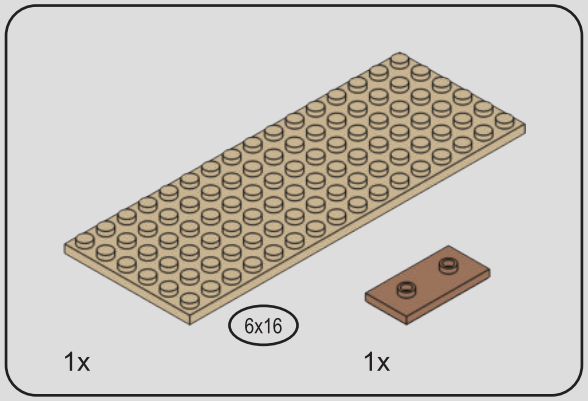

21

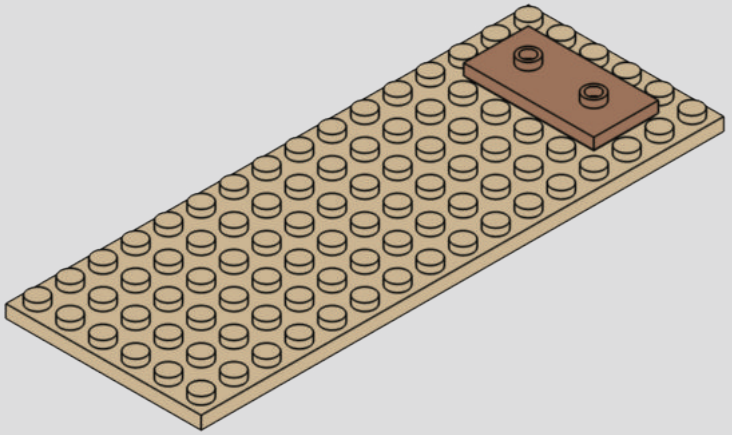

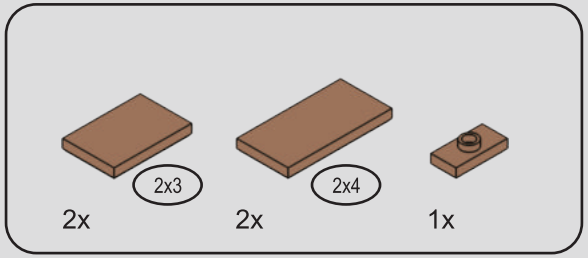

22

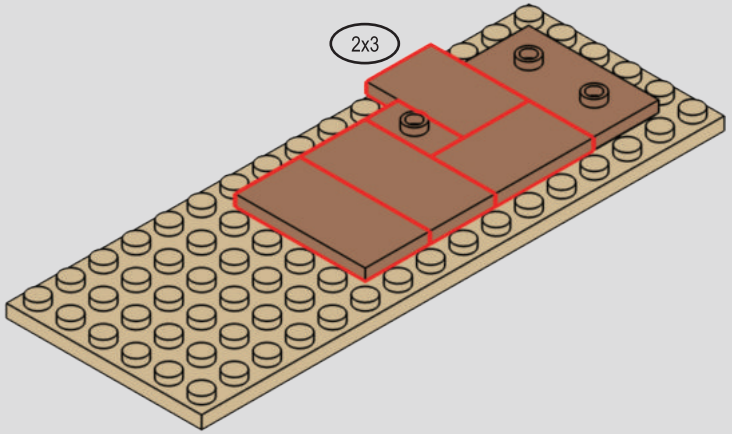

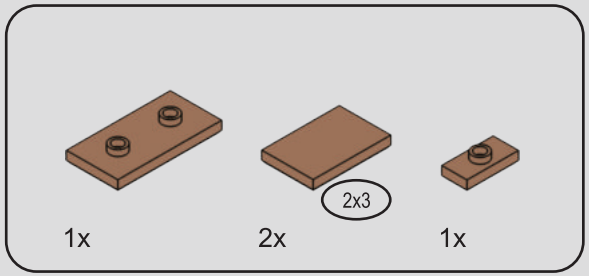

23

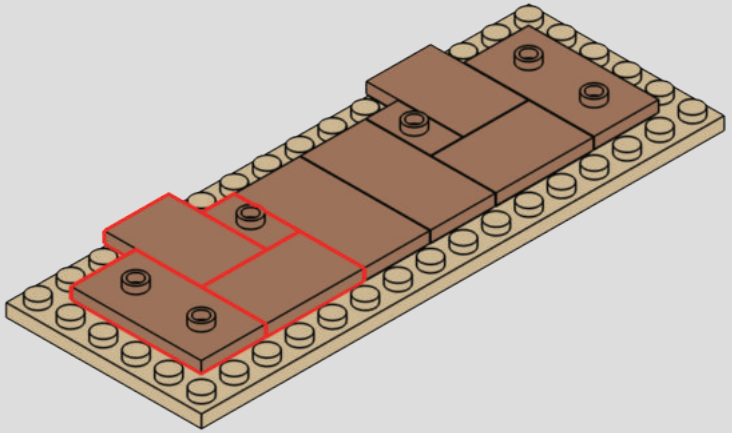

24

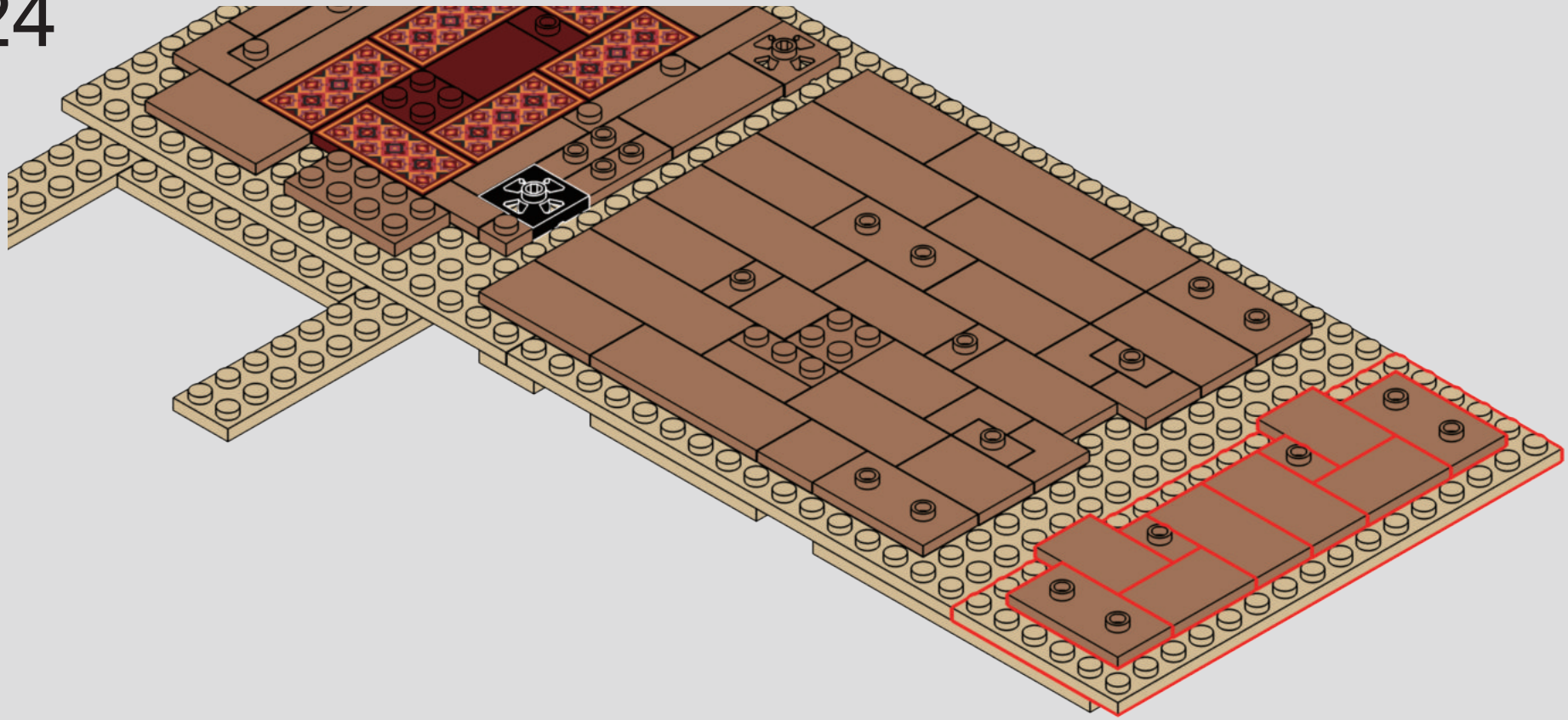

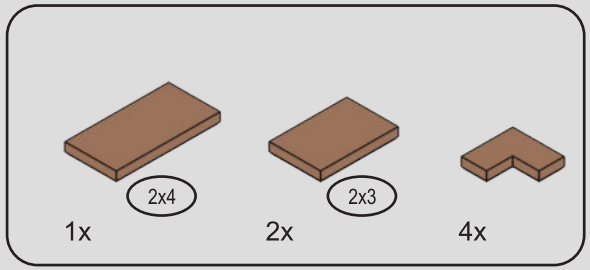

25

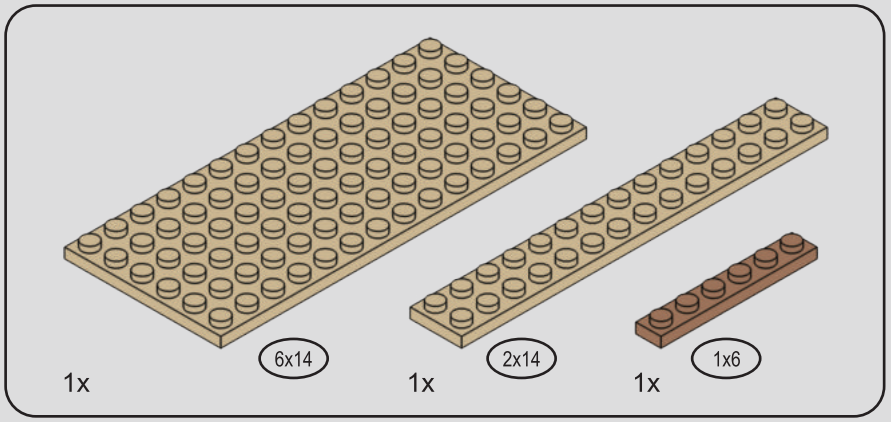

26

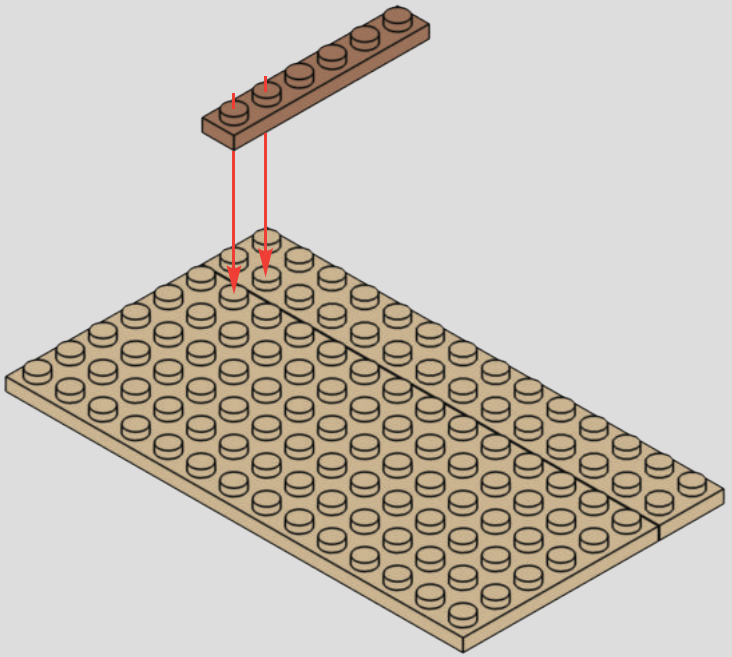

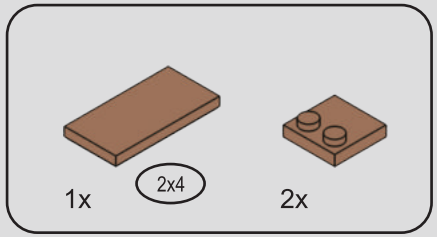

27

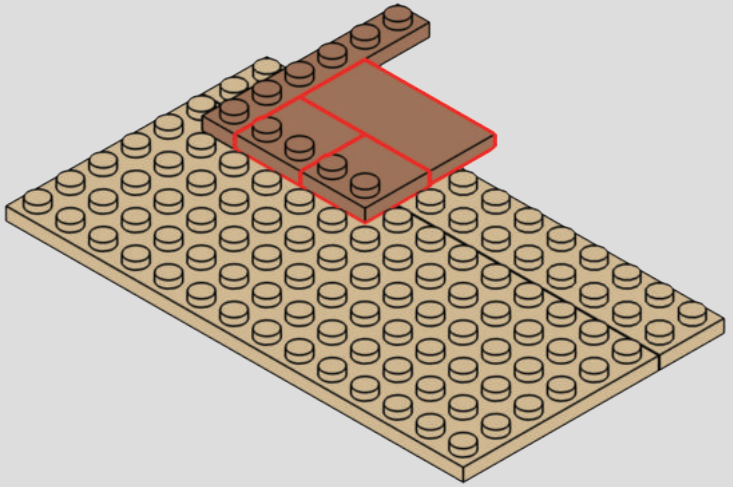

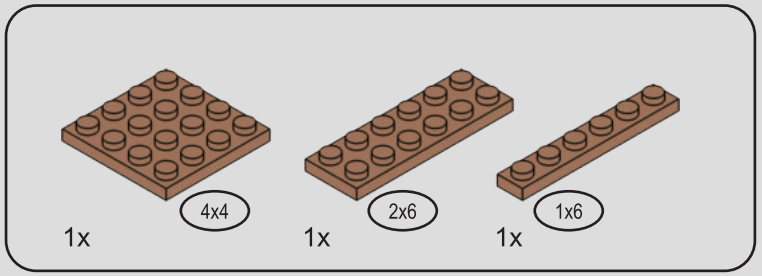

28

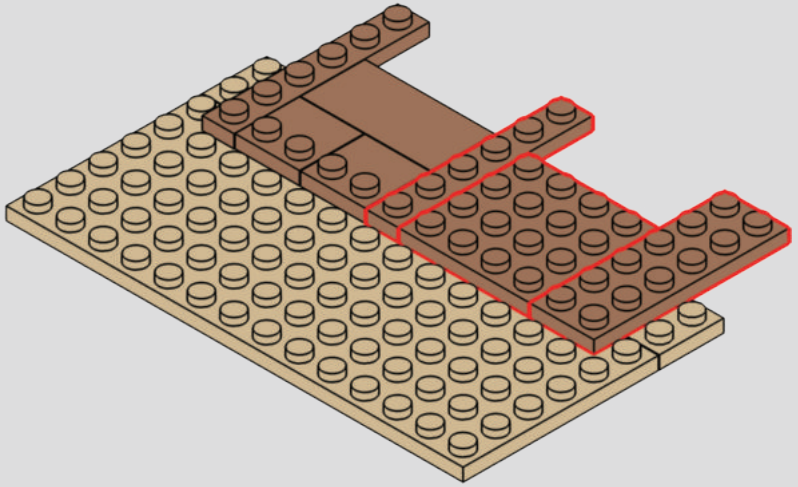

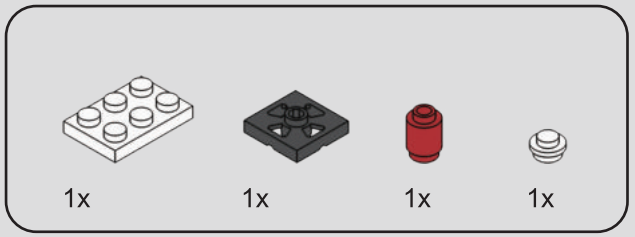

29

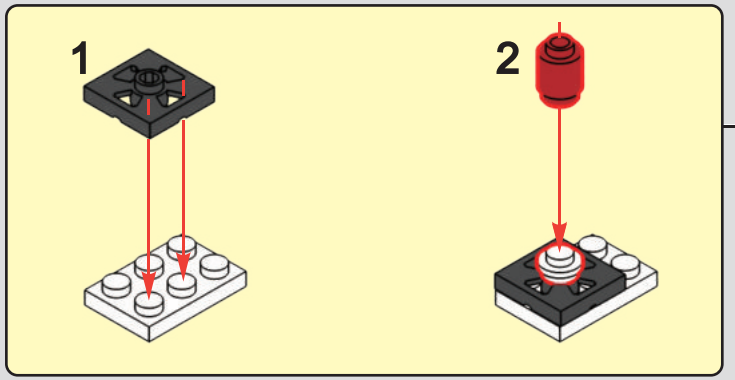

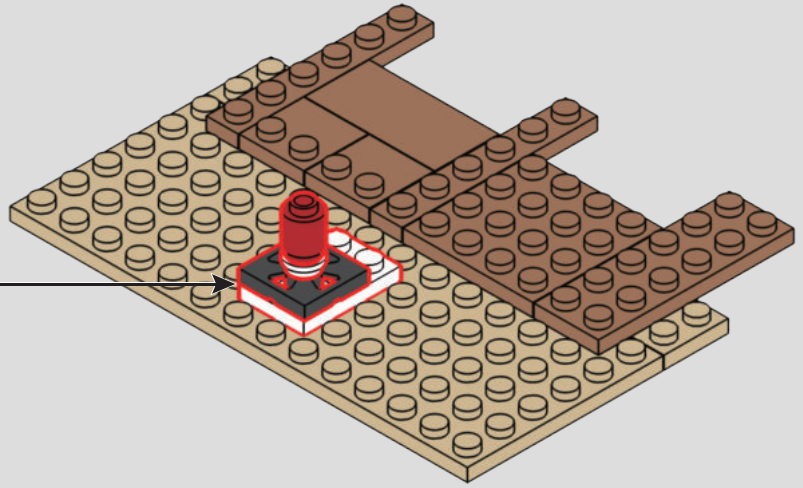

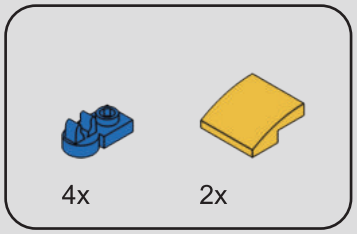

30

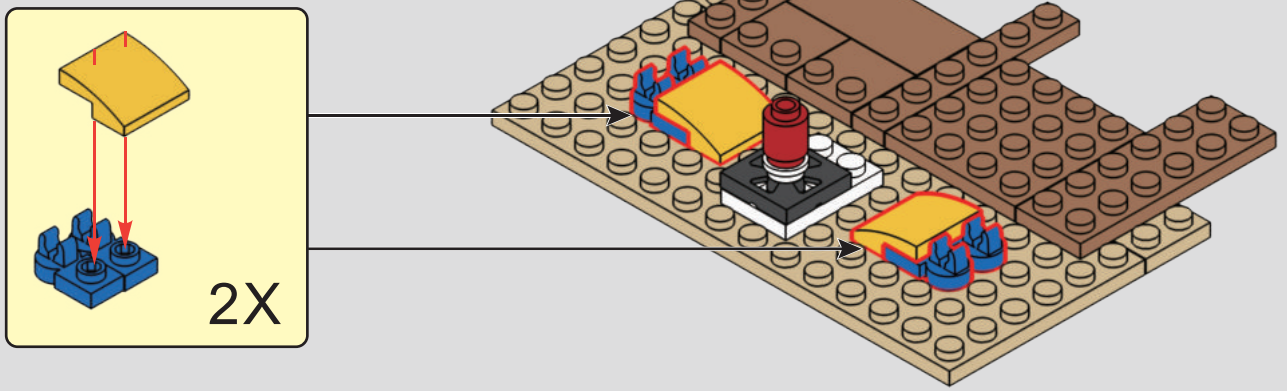

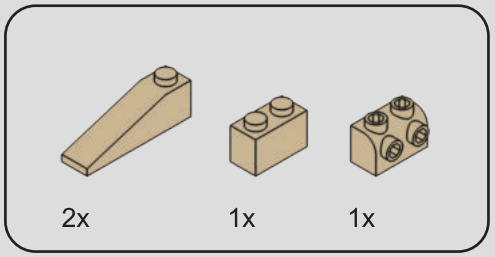

31

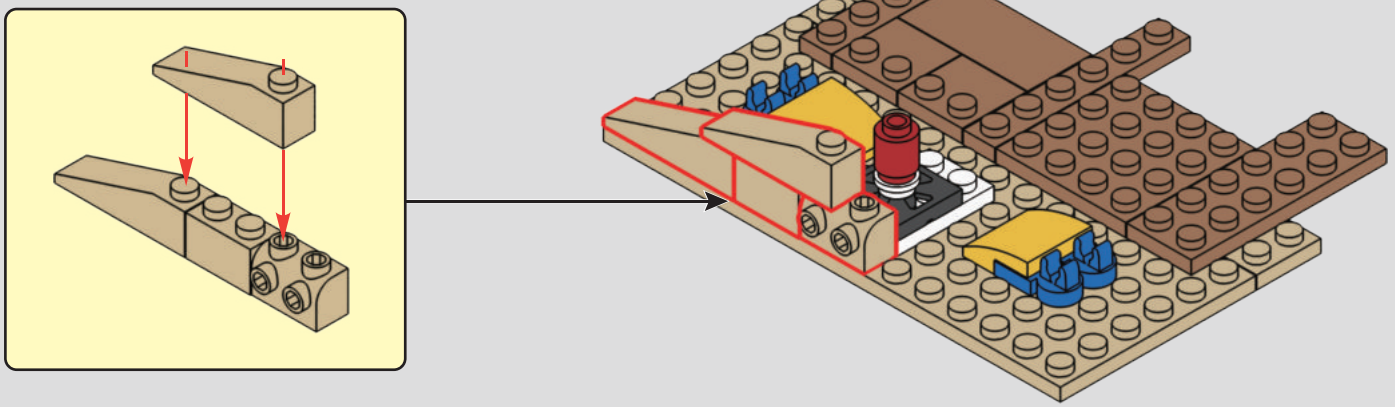

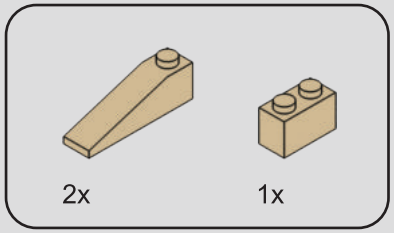

32

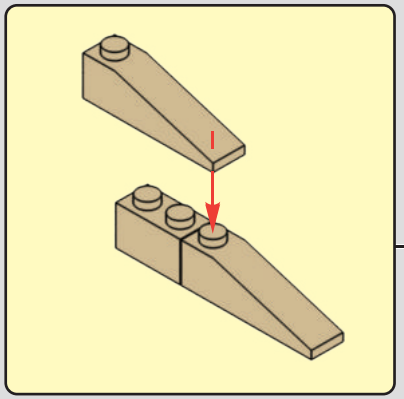

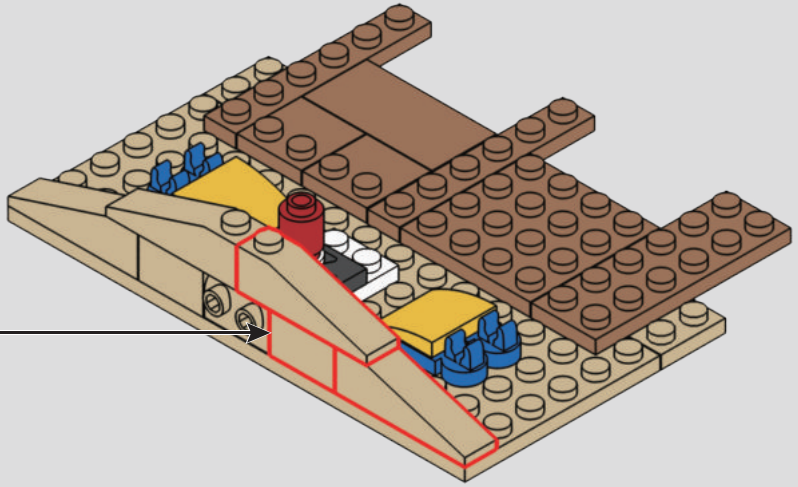

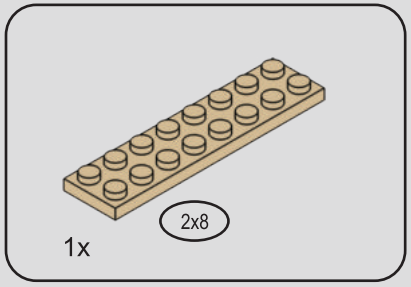

33



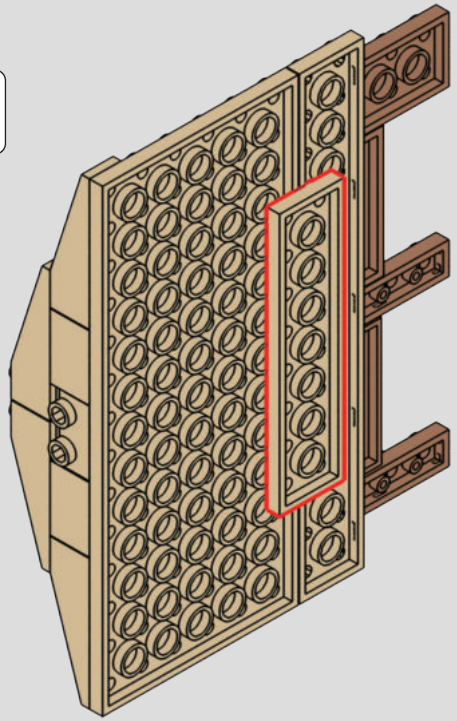

34

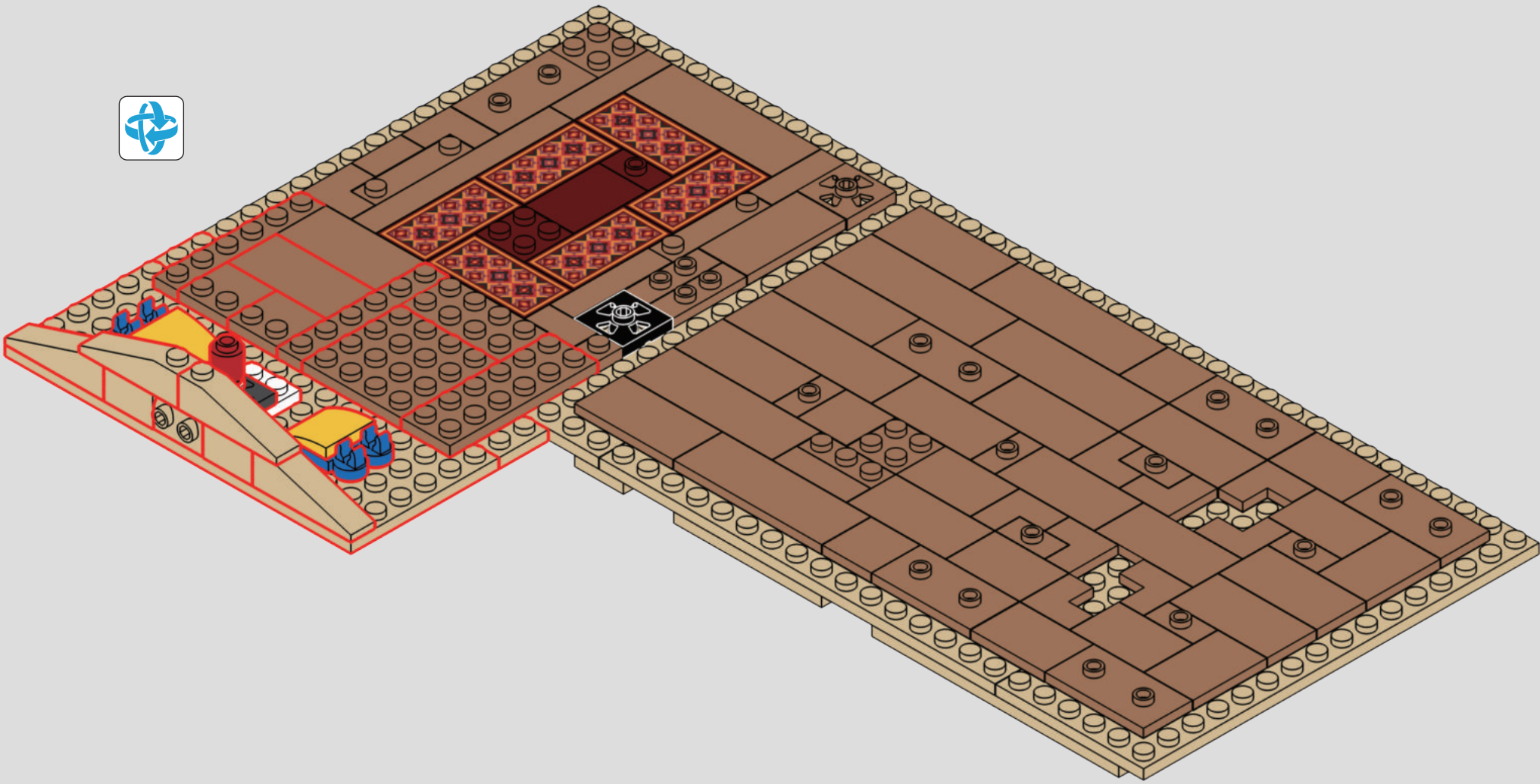

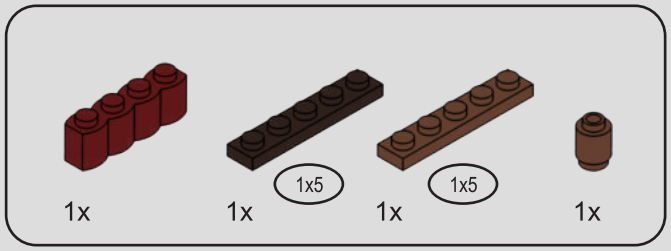

35

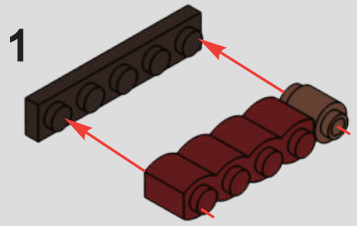

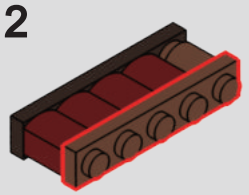

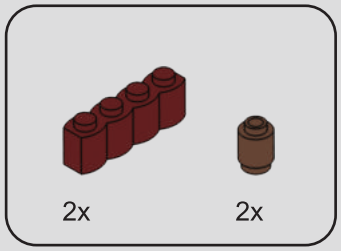

36

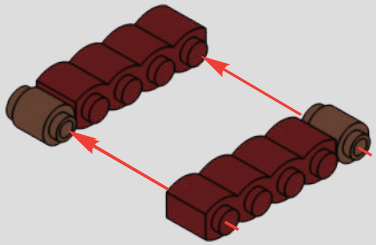

37

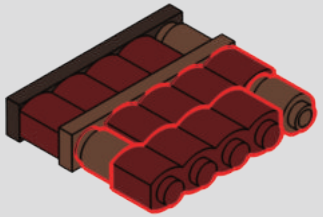

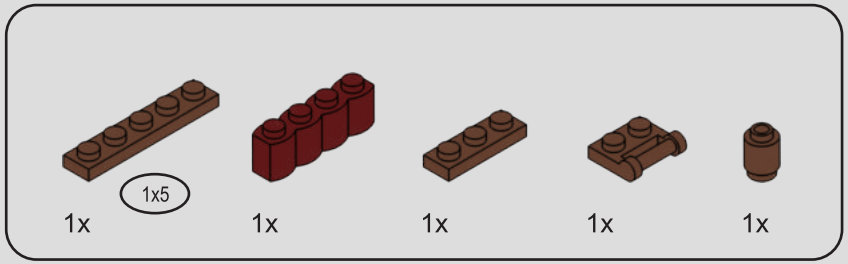

38

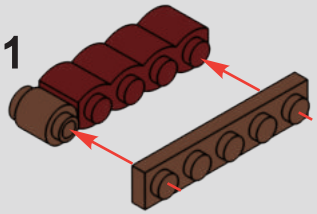

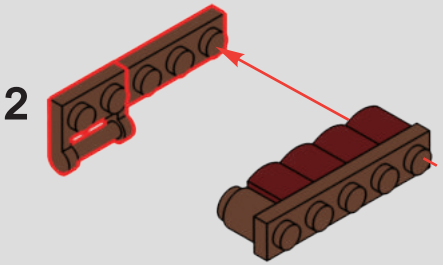

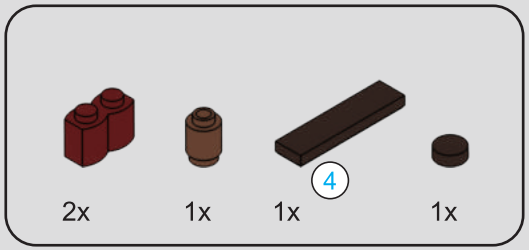



39

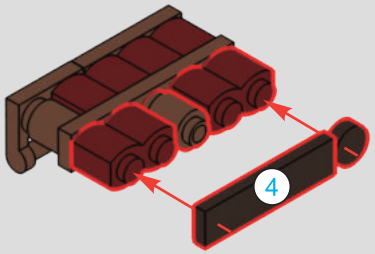

40

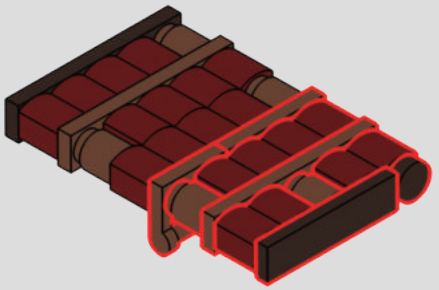

41

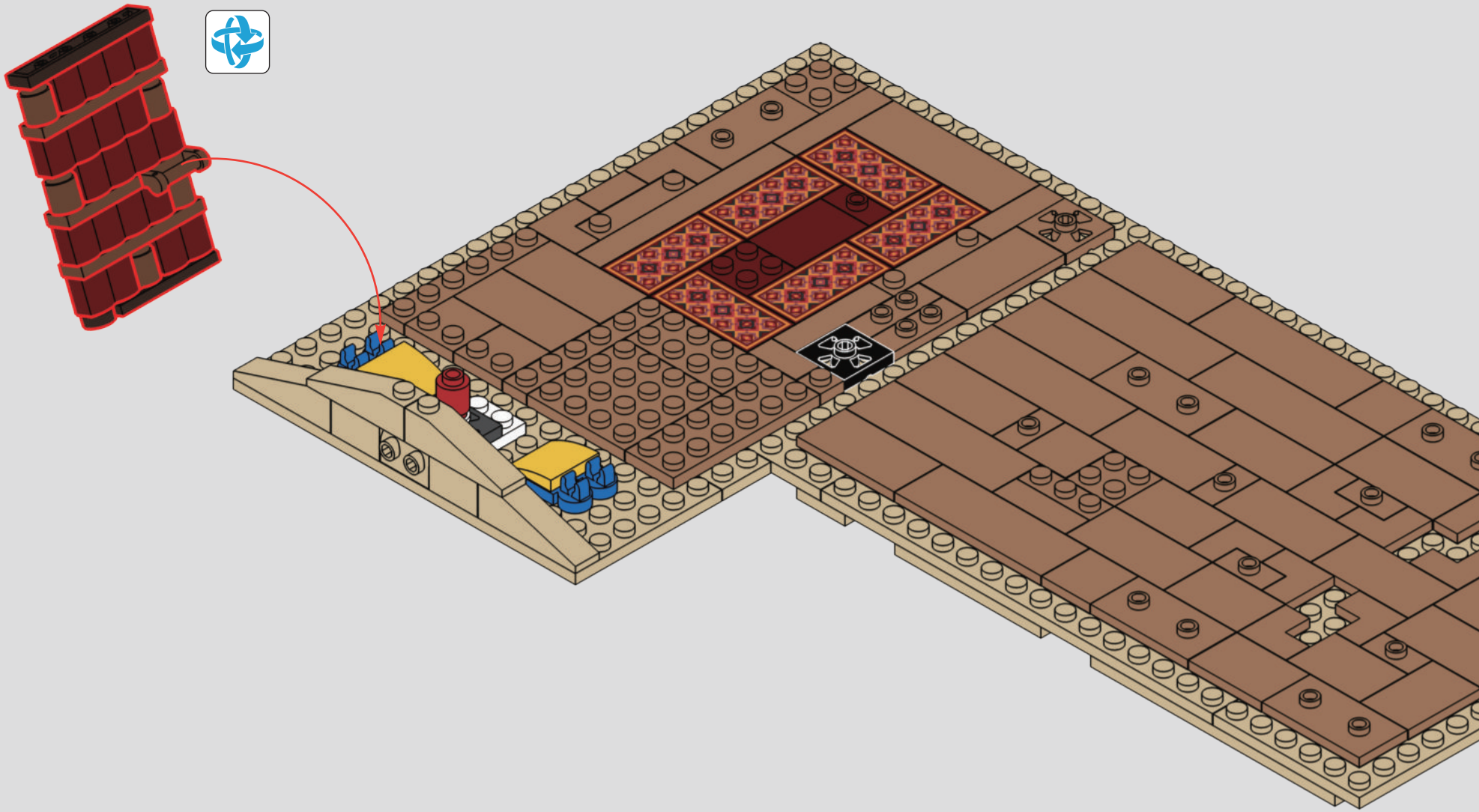

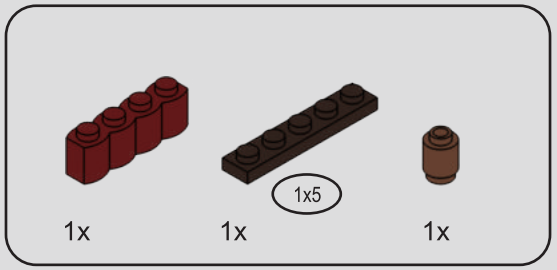

42

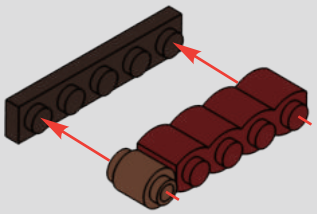

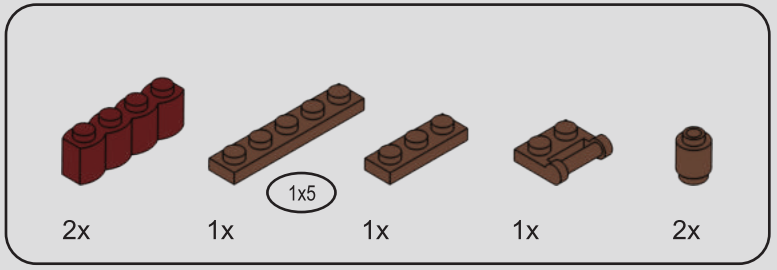

43

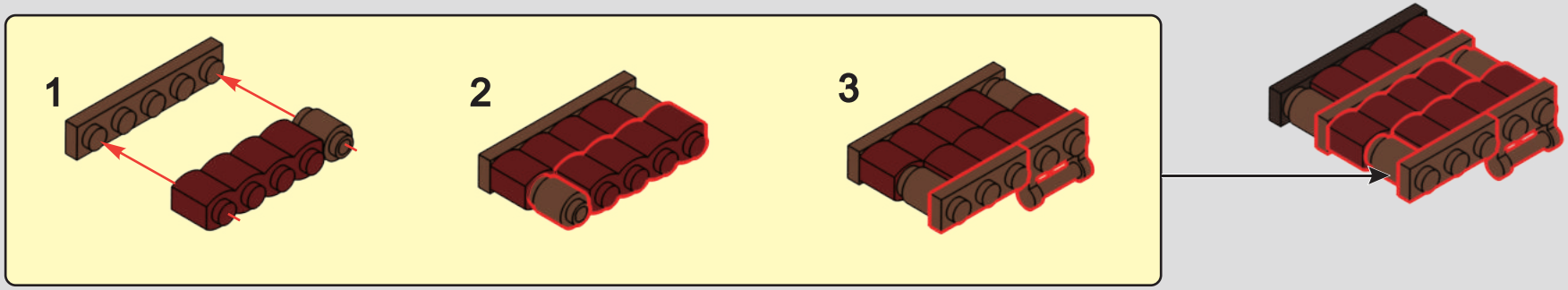

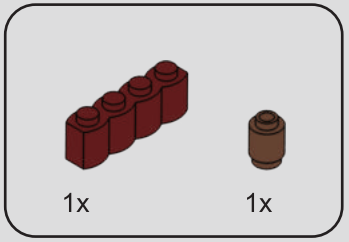

44

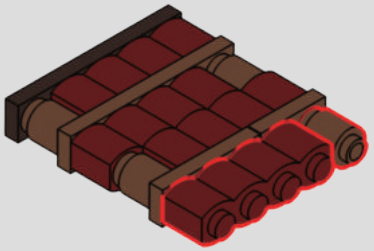

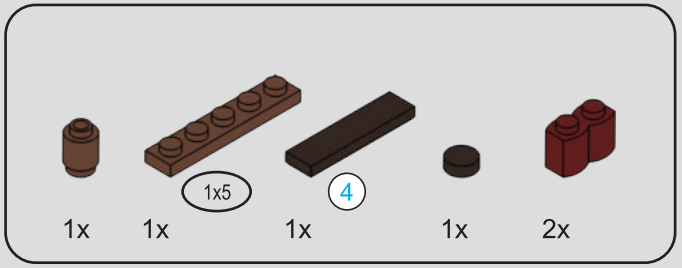



45

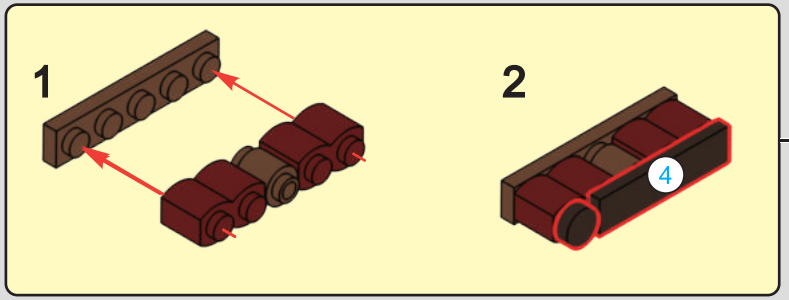

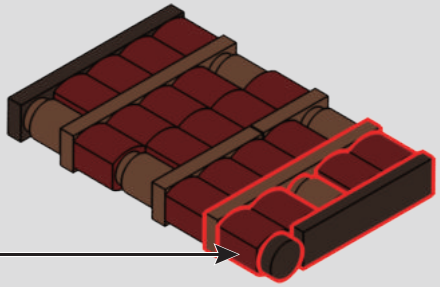

46

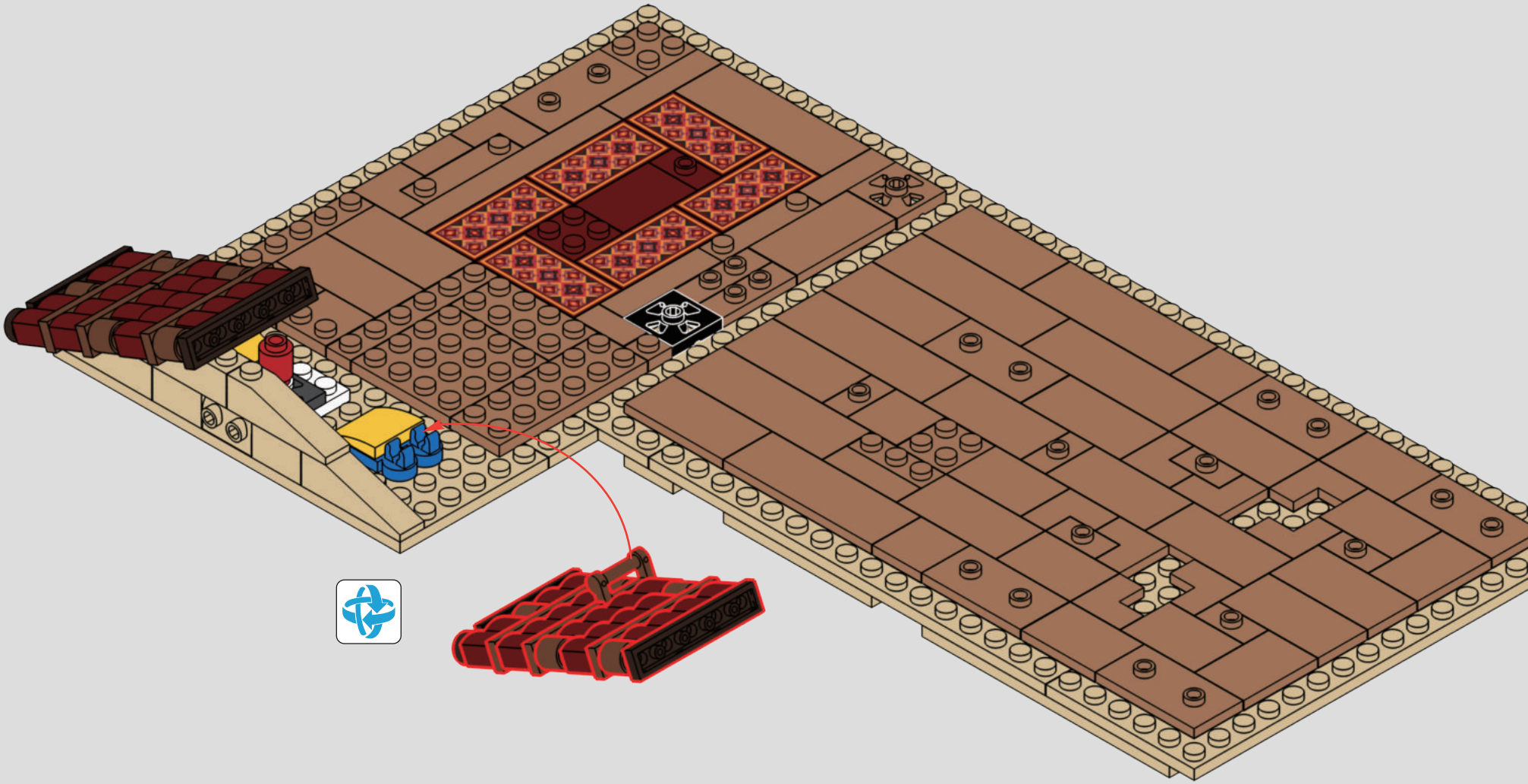

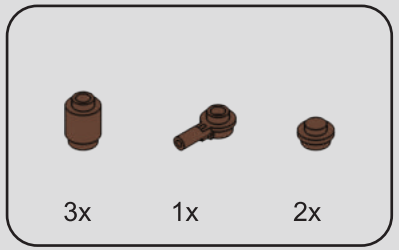

47

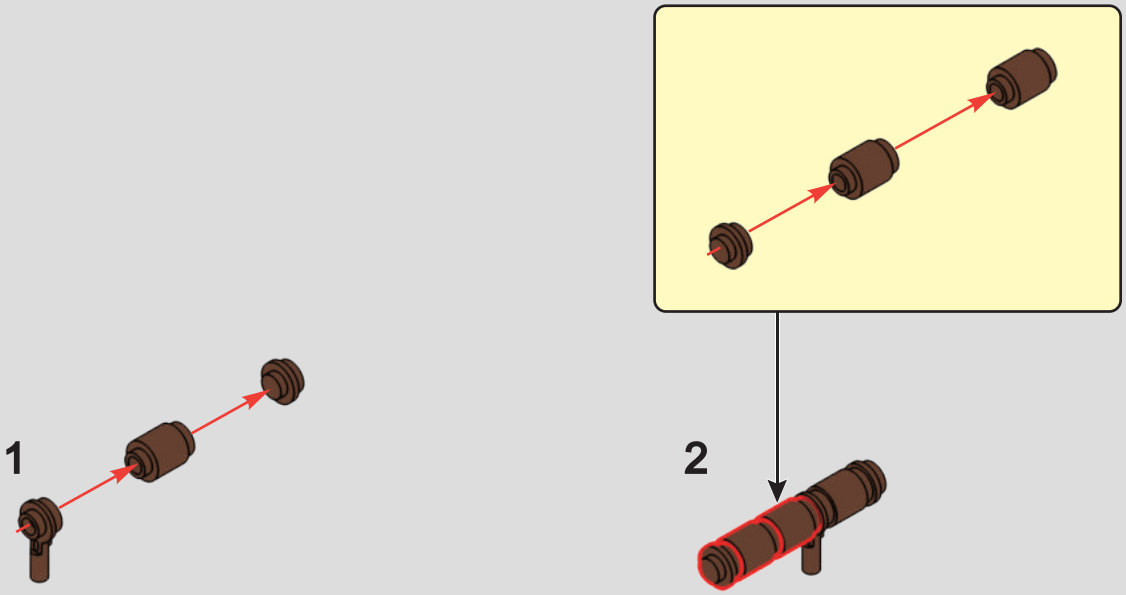

48

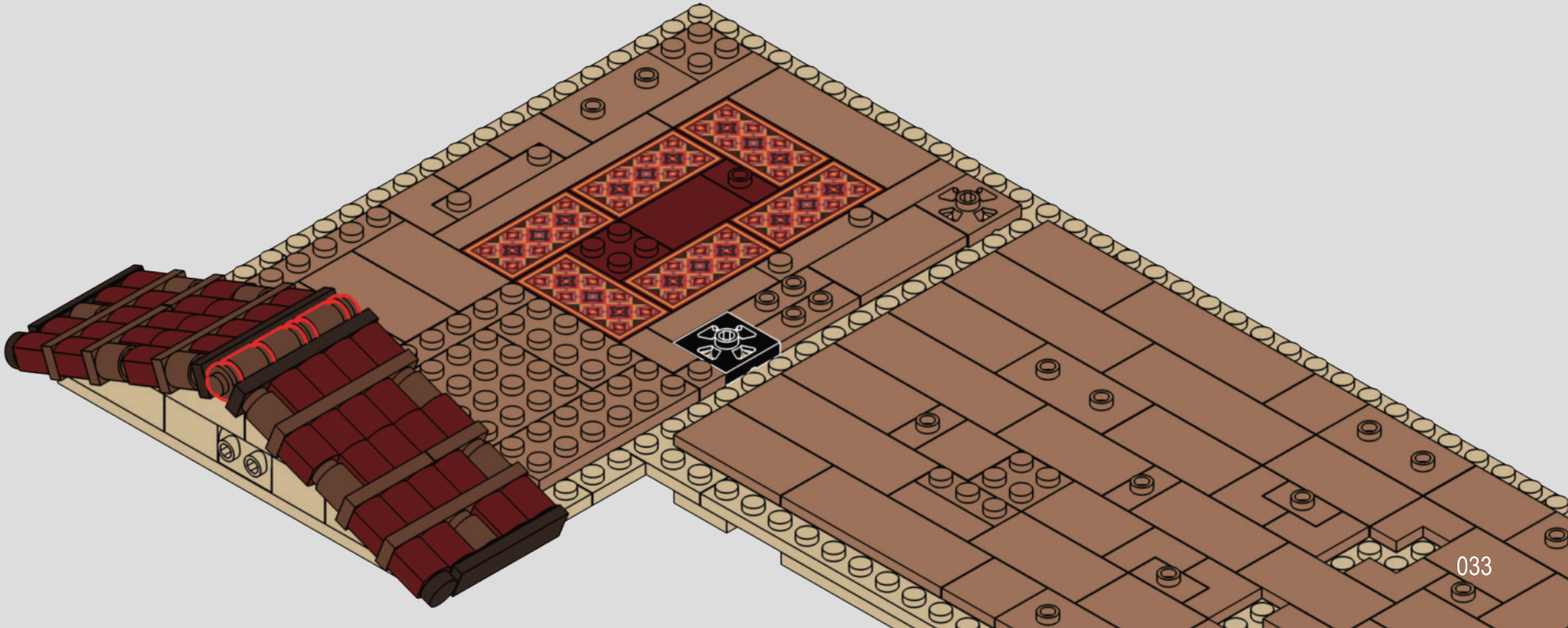

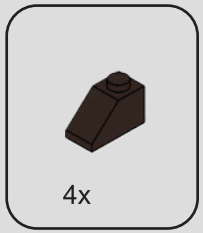

49

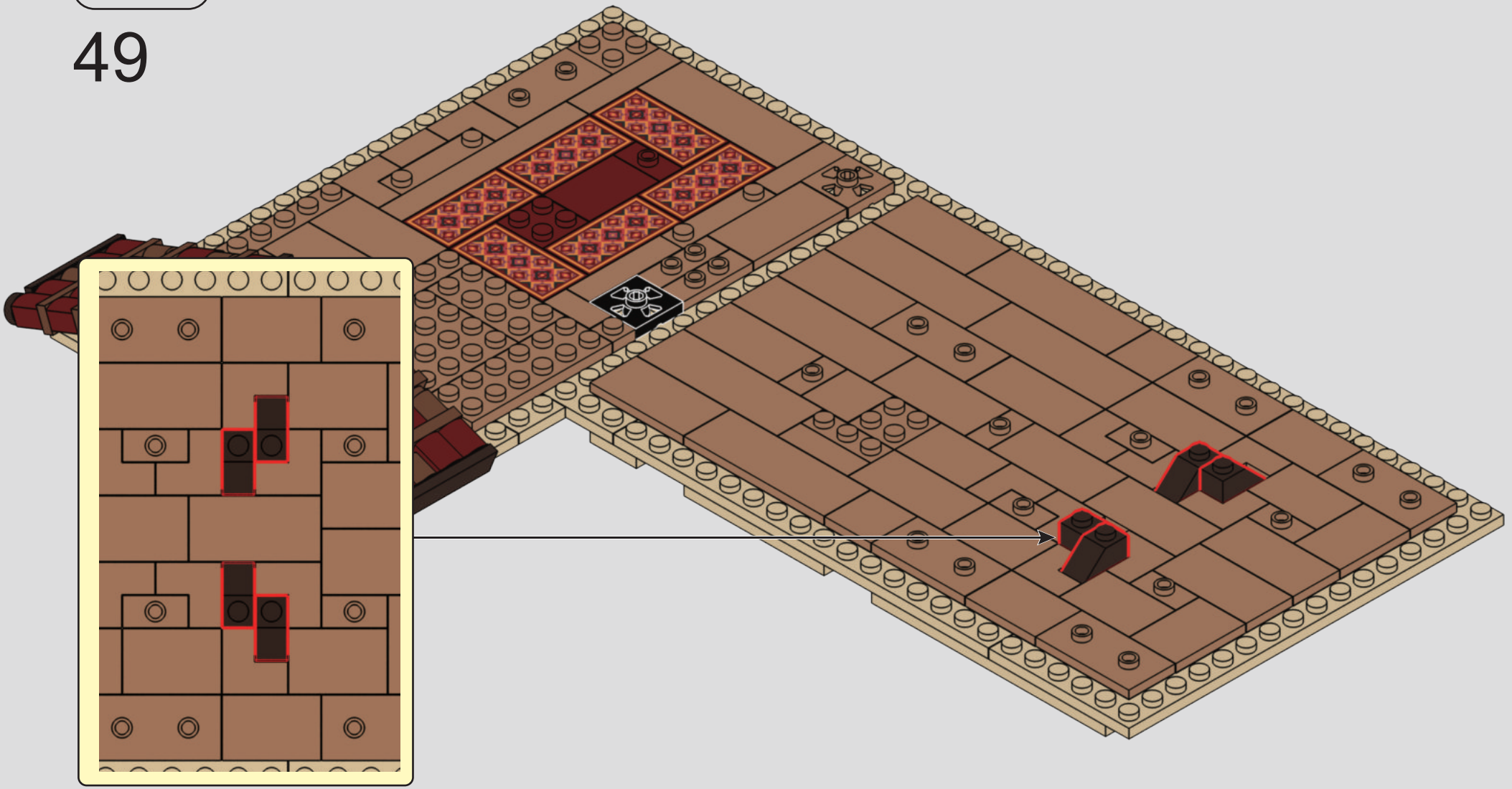

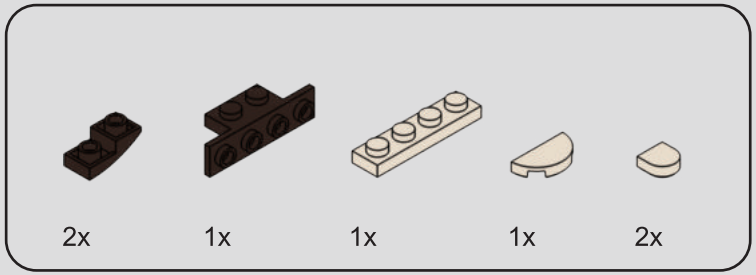

50

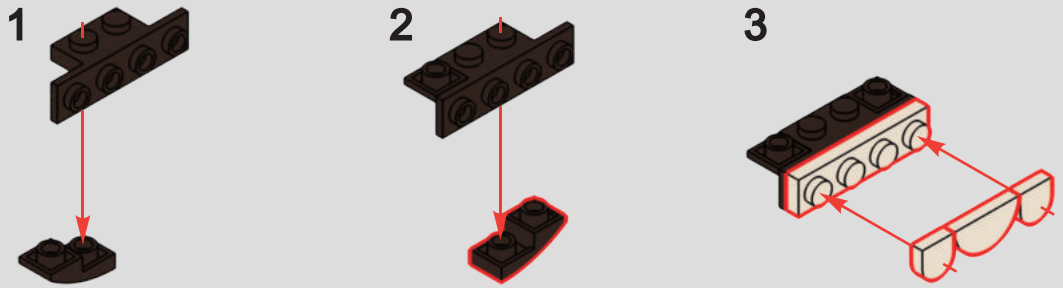

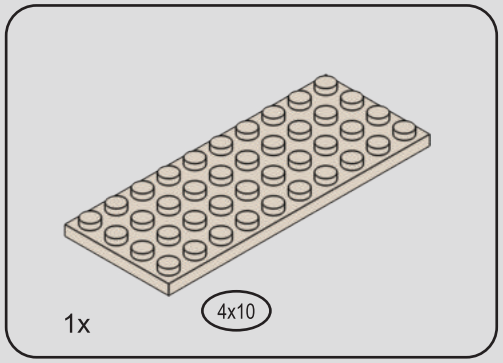

51

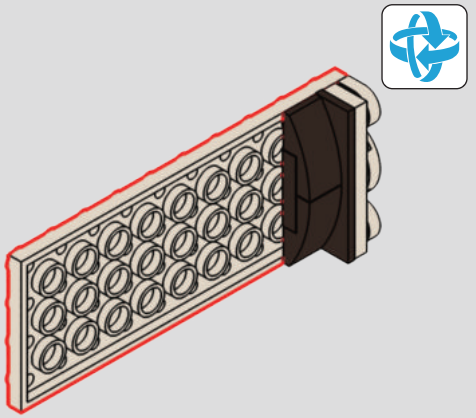

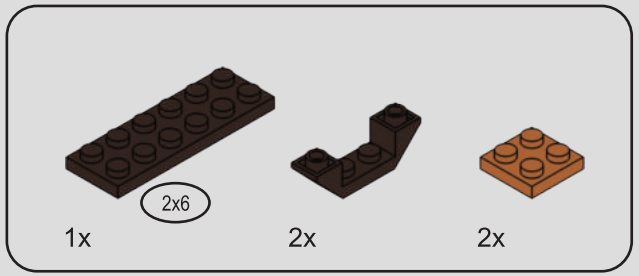

52

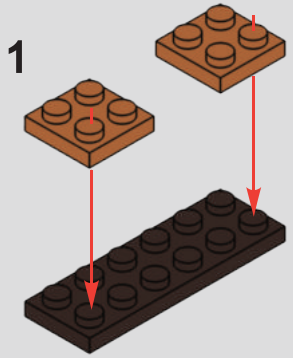

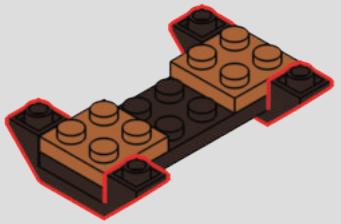

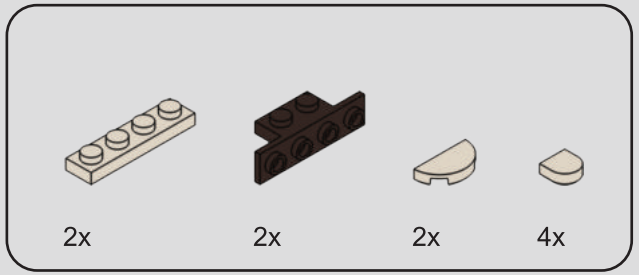

53

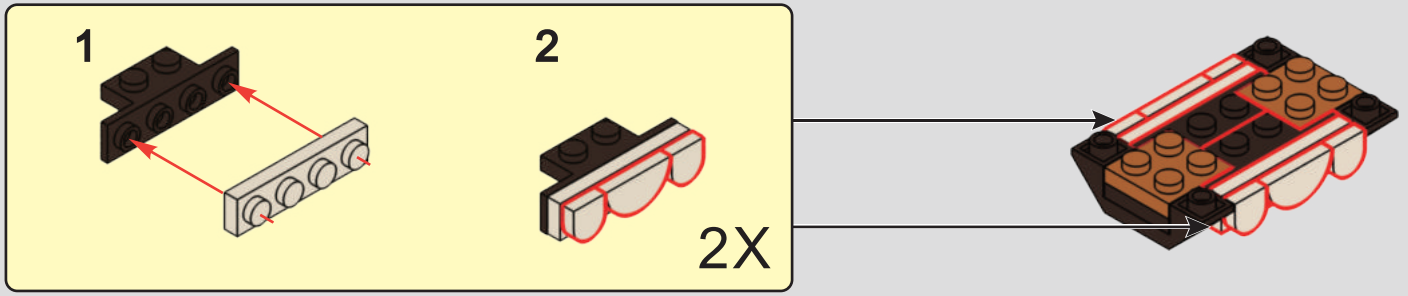

54

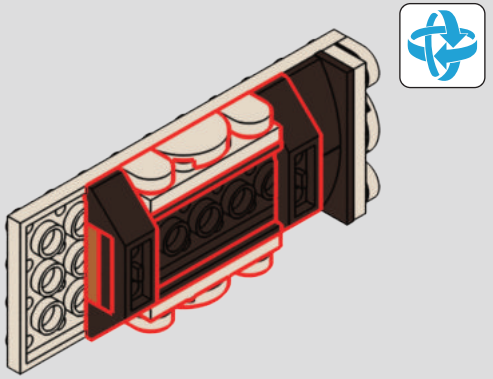

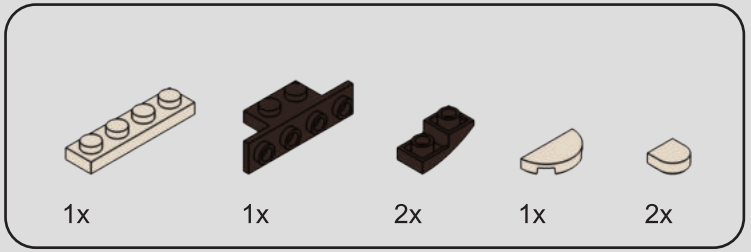

55

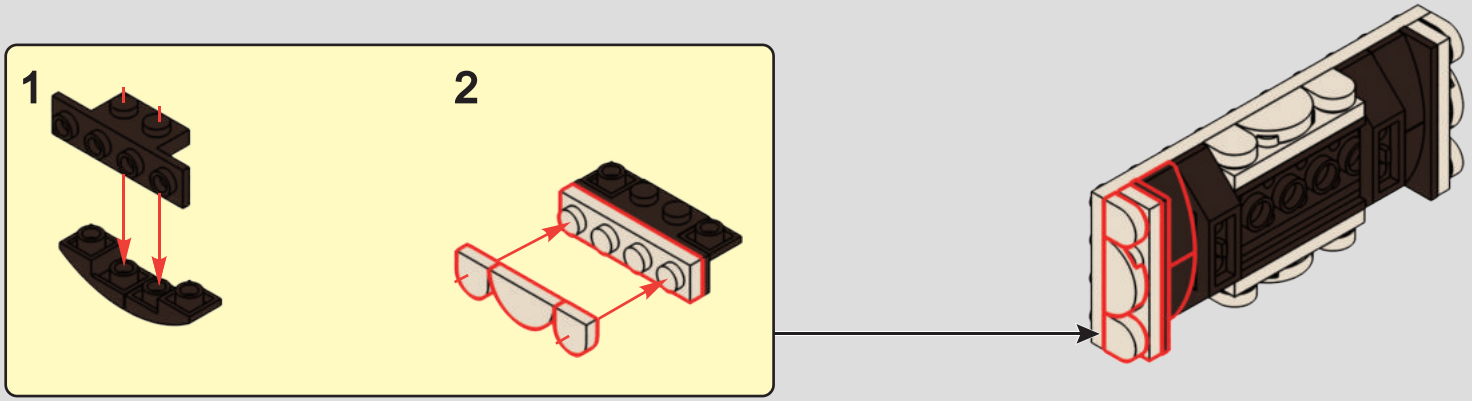

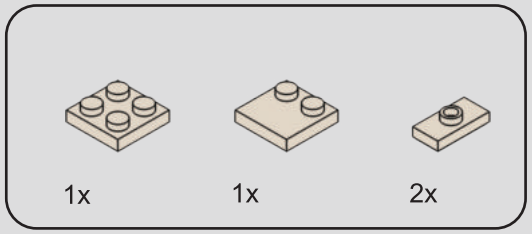

56

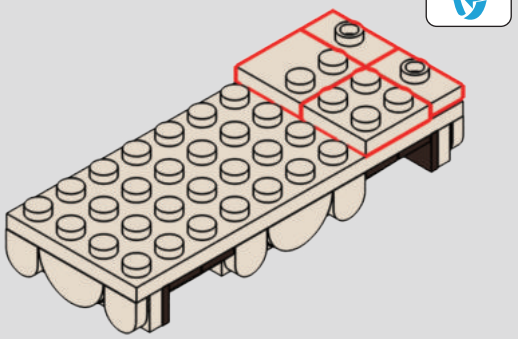

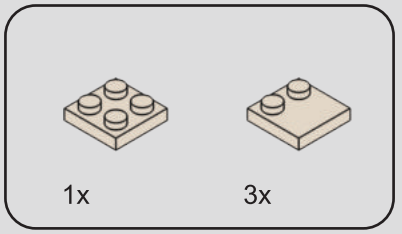

57

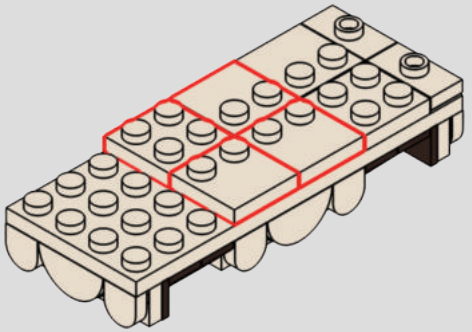

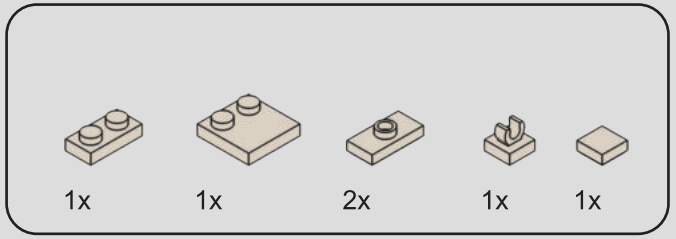

58

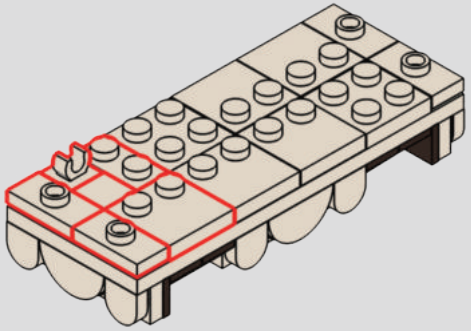

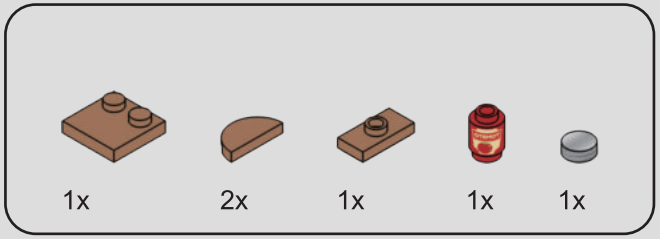

59

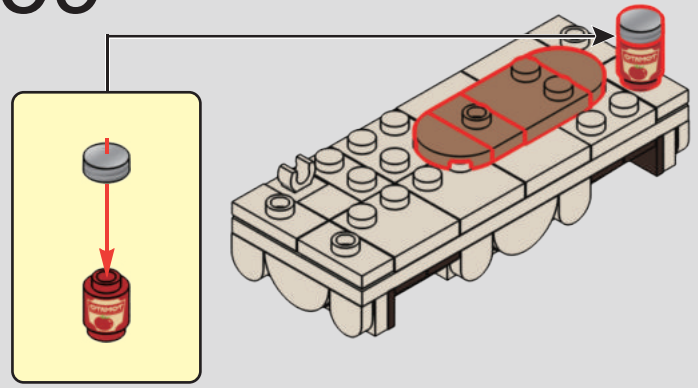

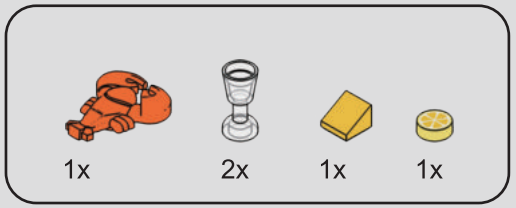

60

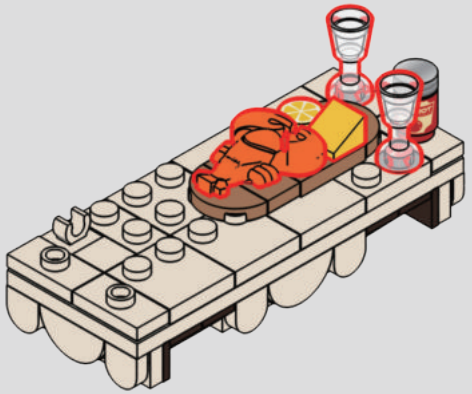

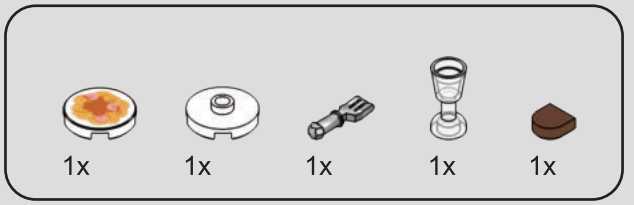

61

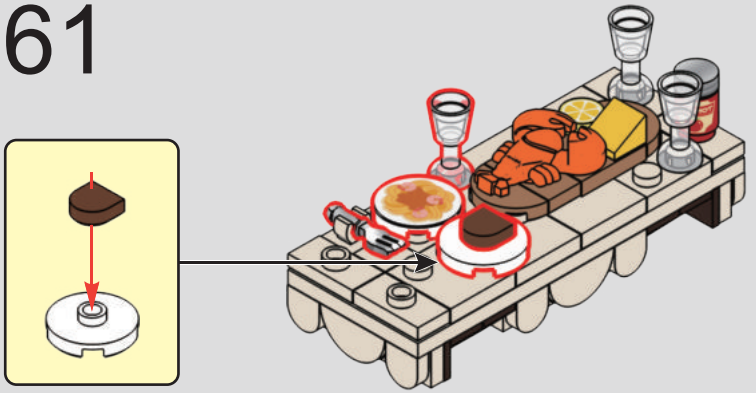

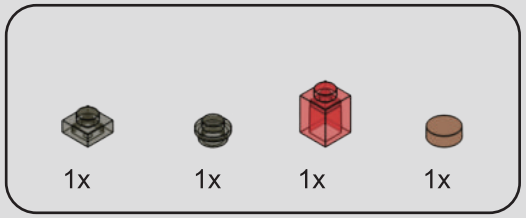

62

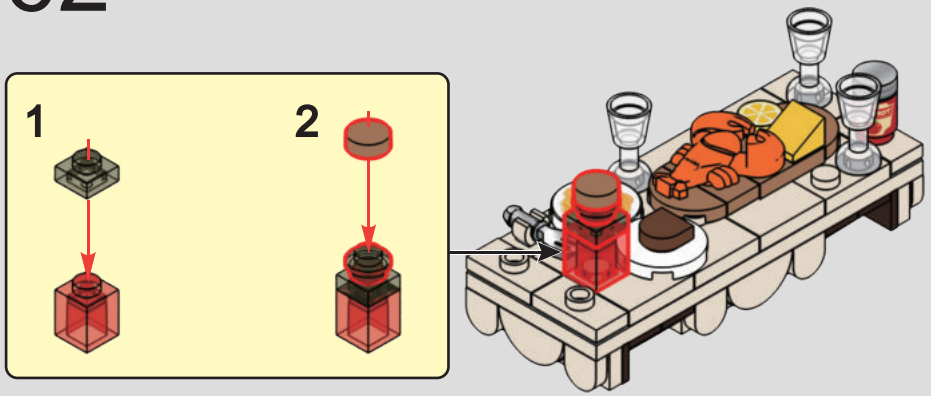

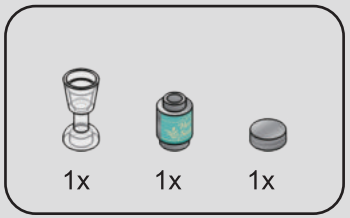

63

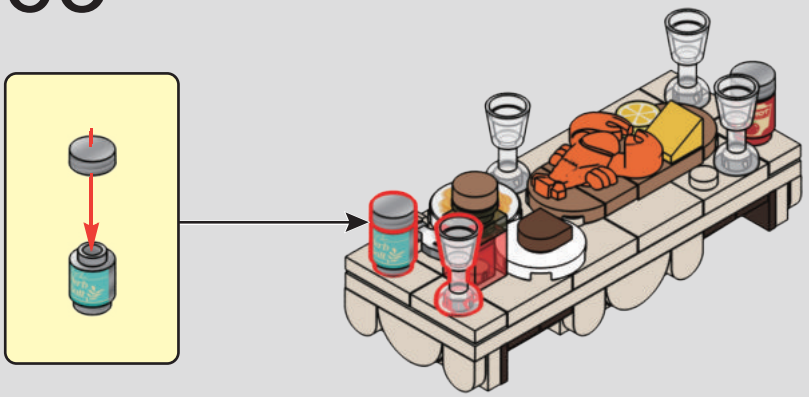

64

1

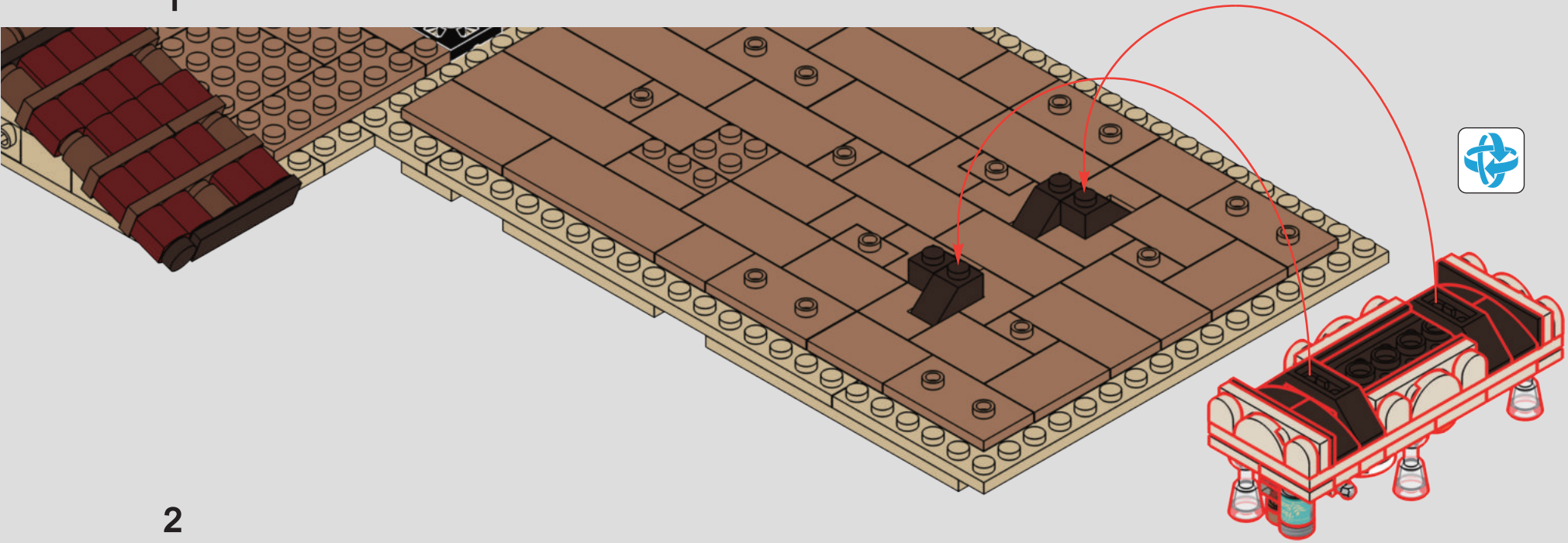

2

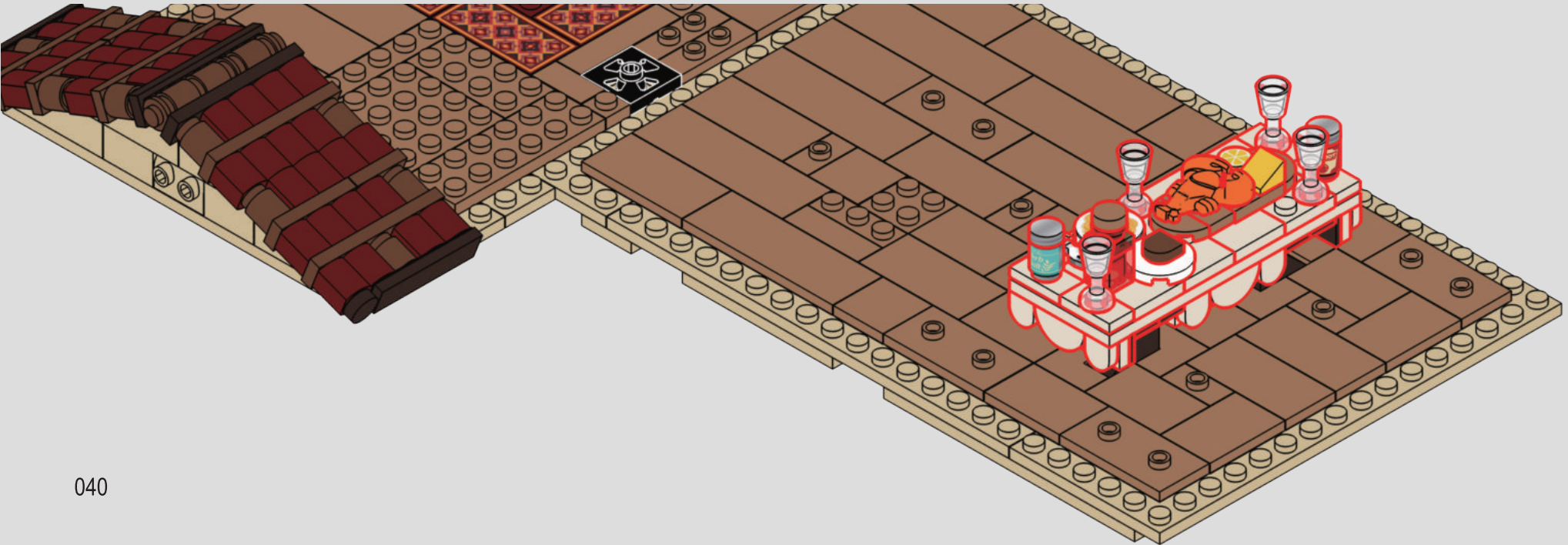

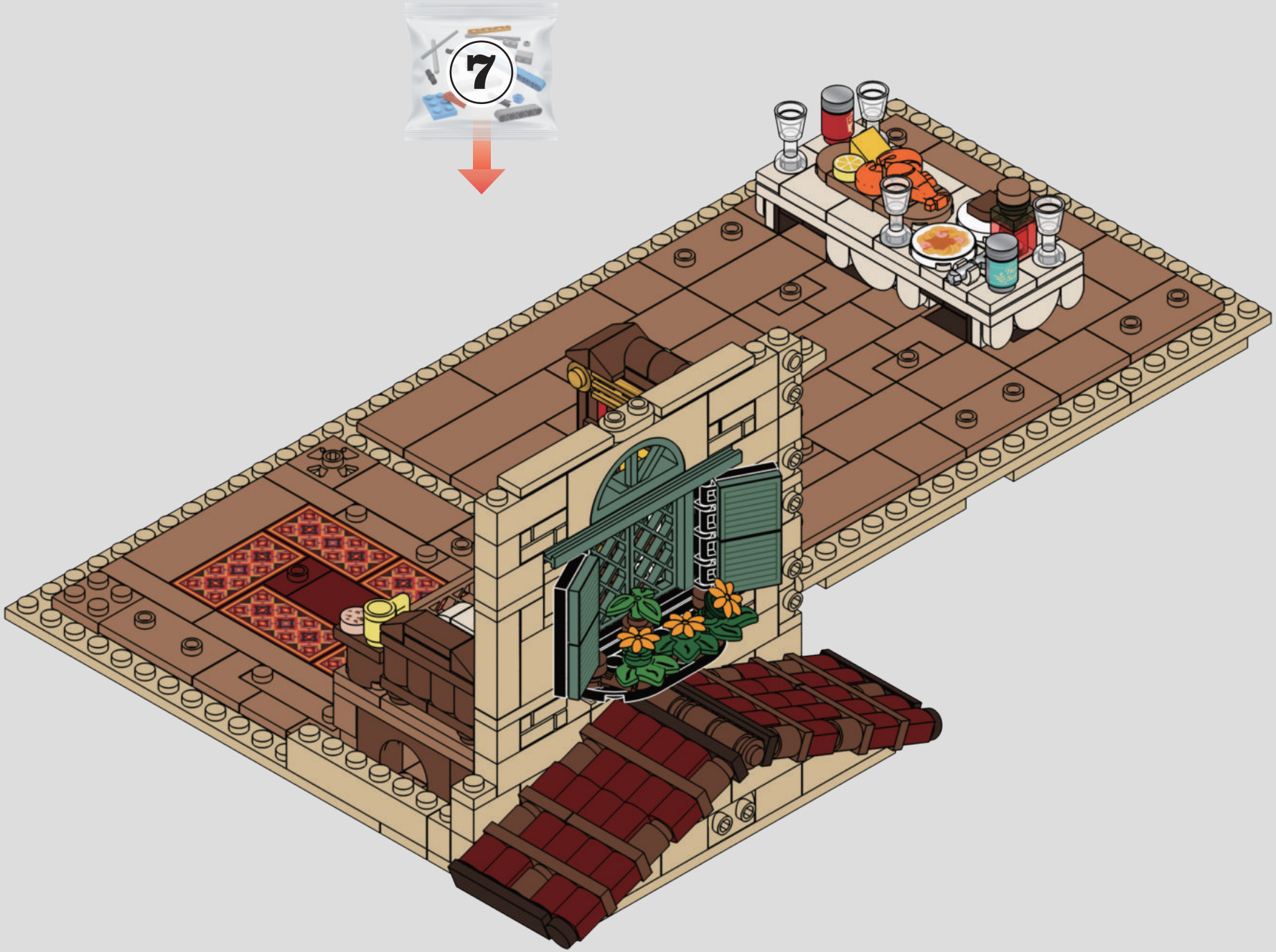
7

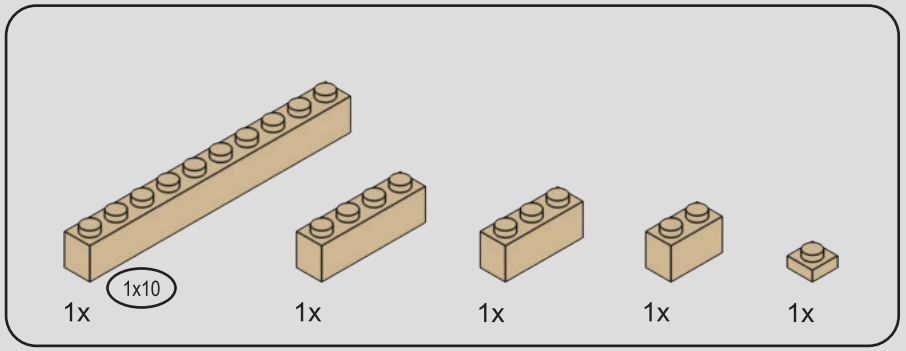

65

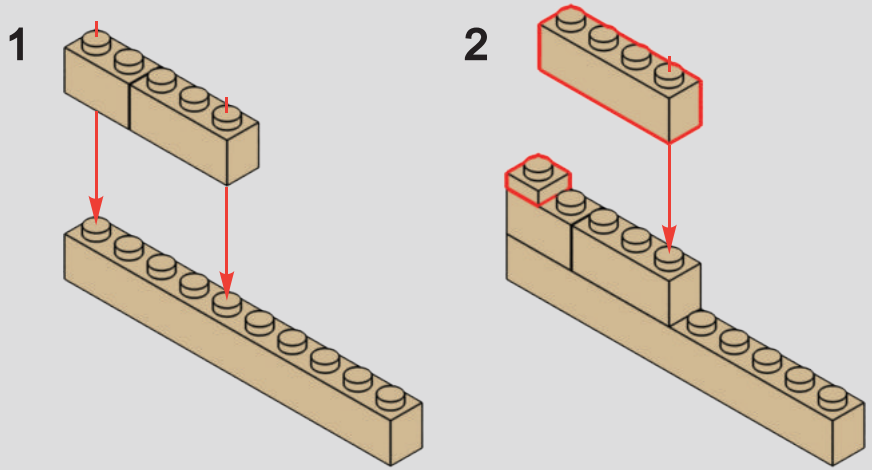

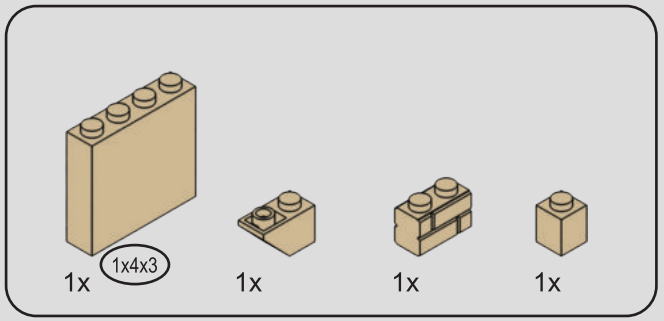

66

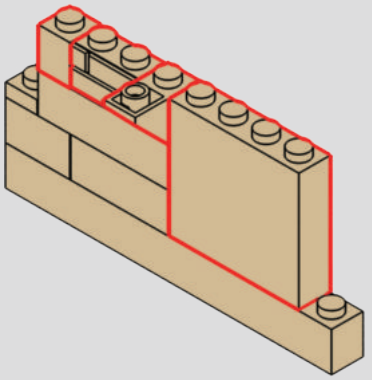

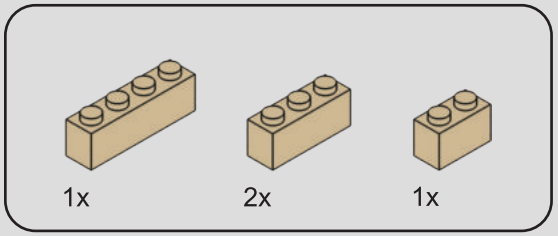

67

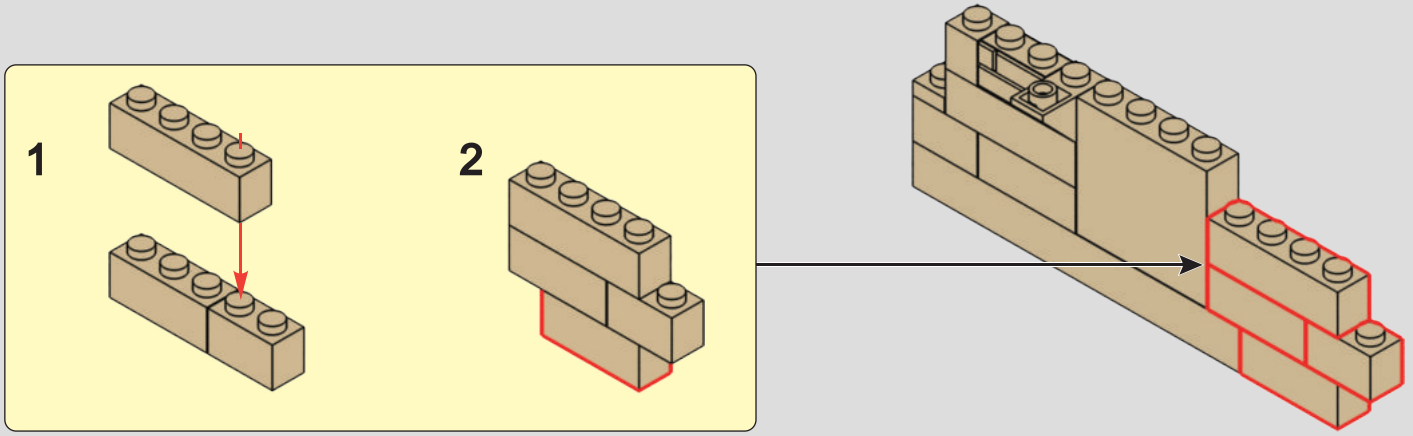

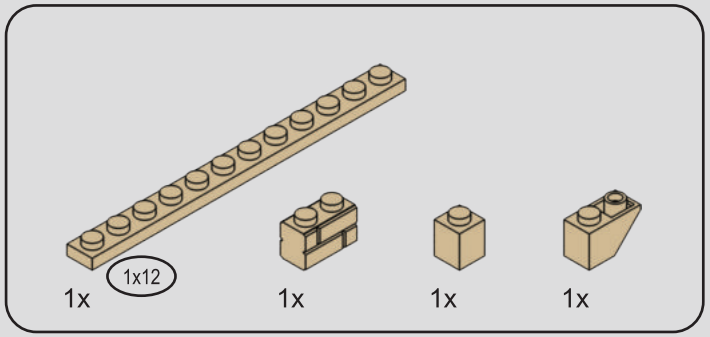

68

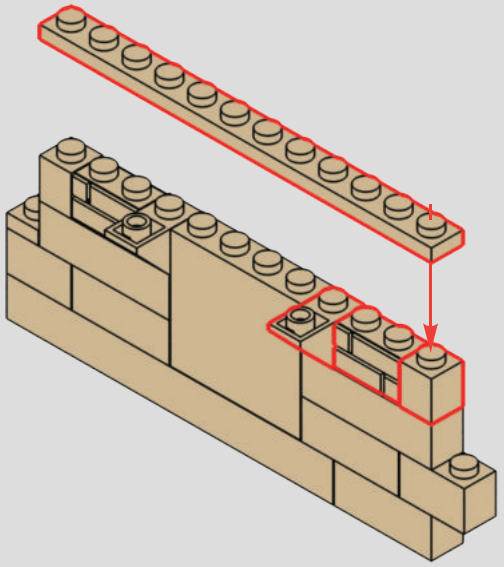

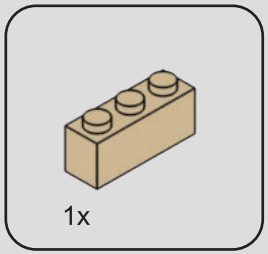

69

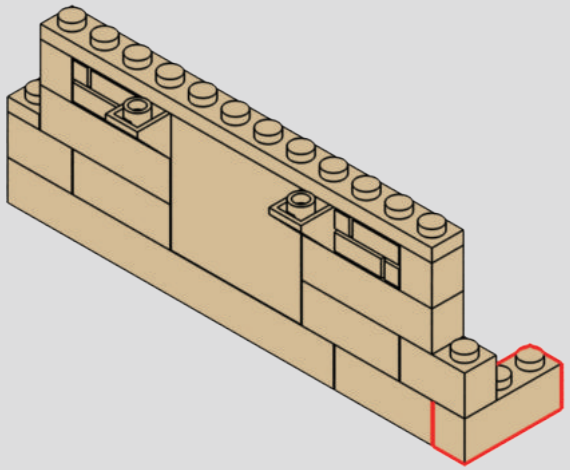

70

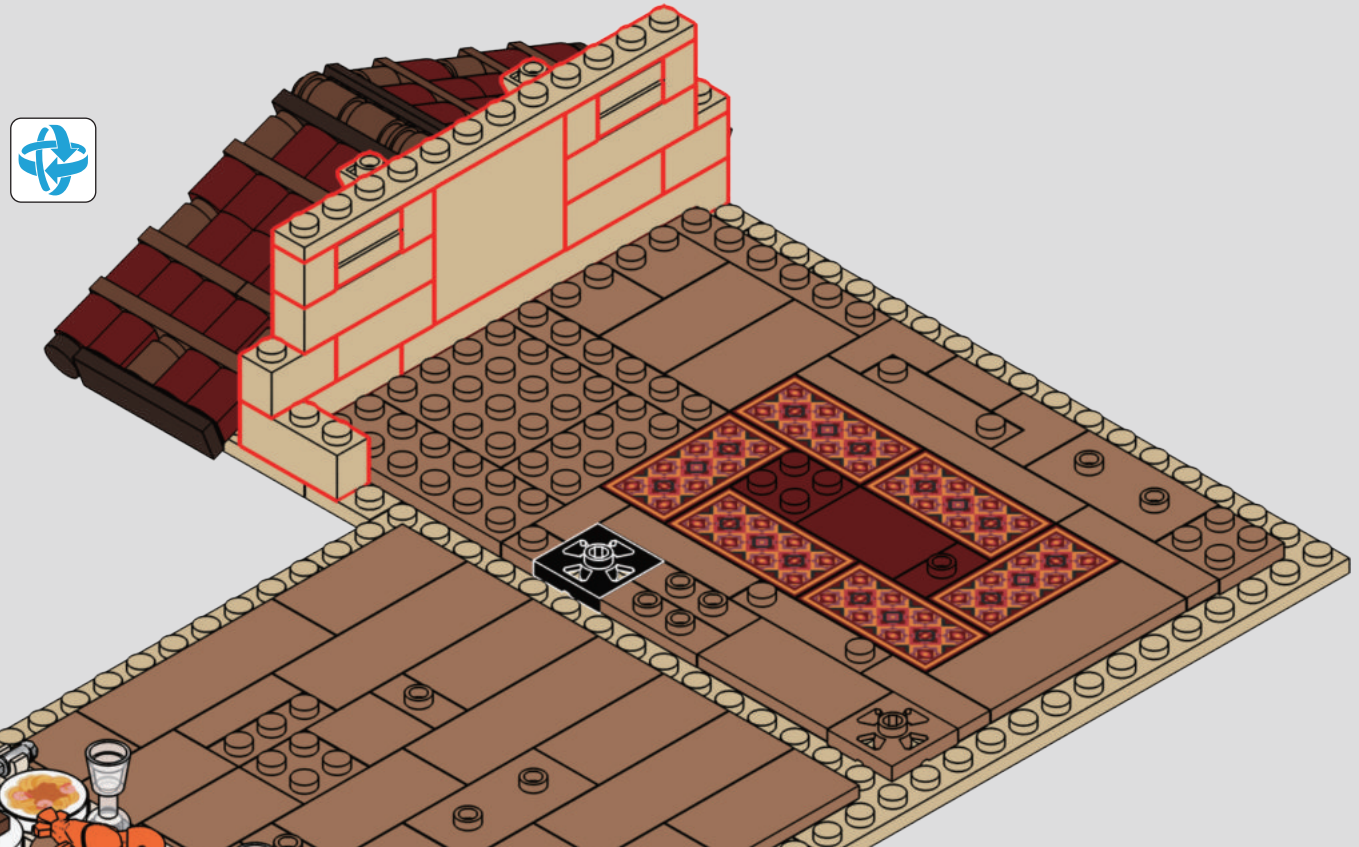

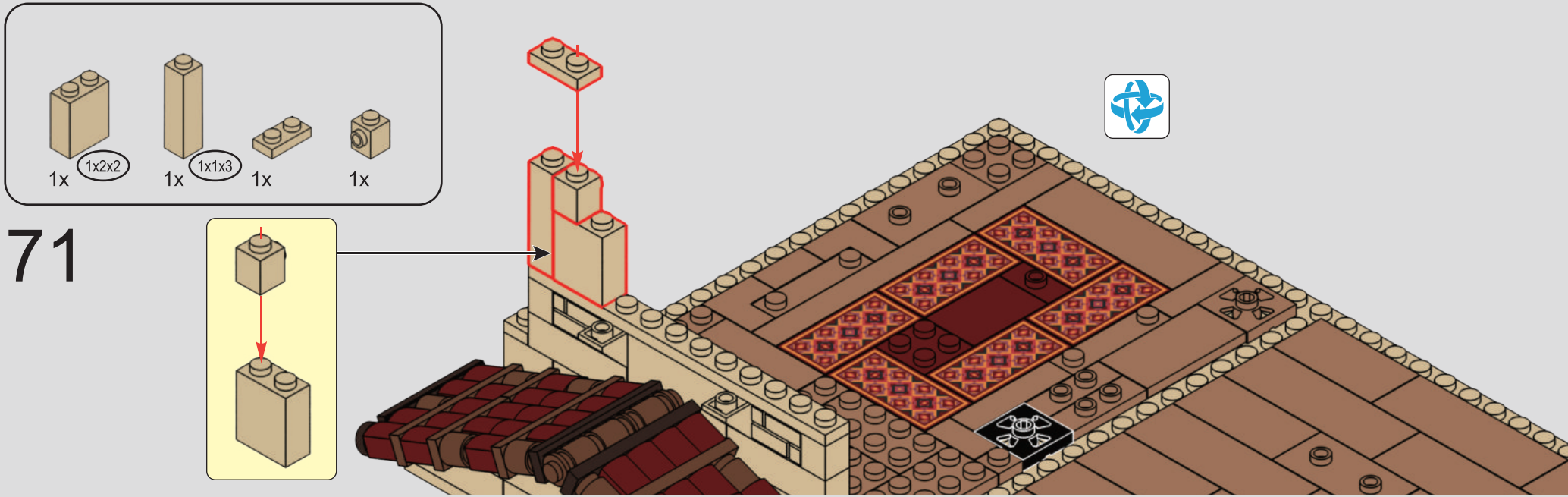

71

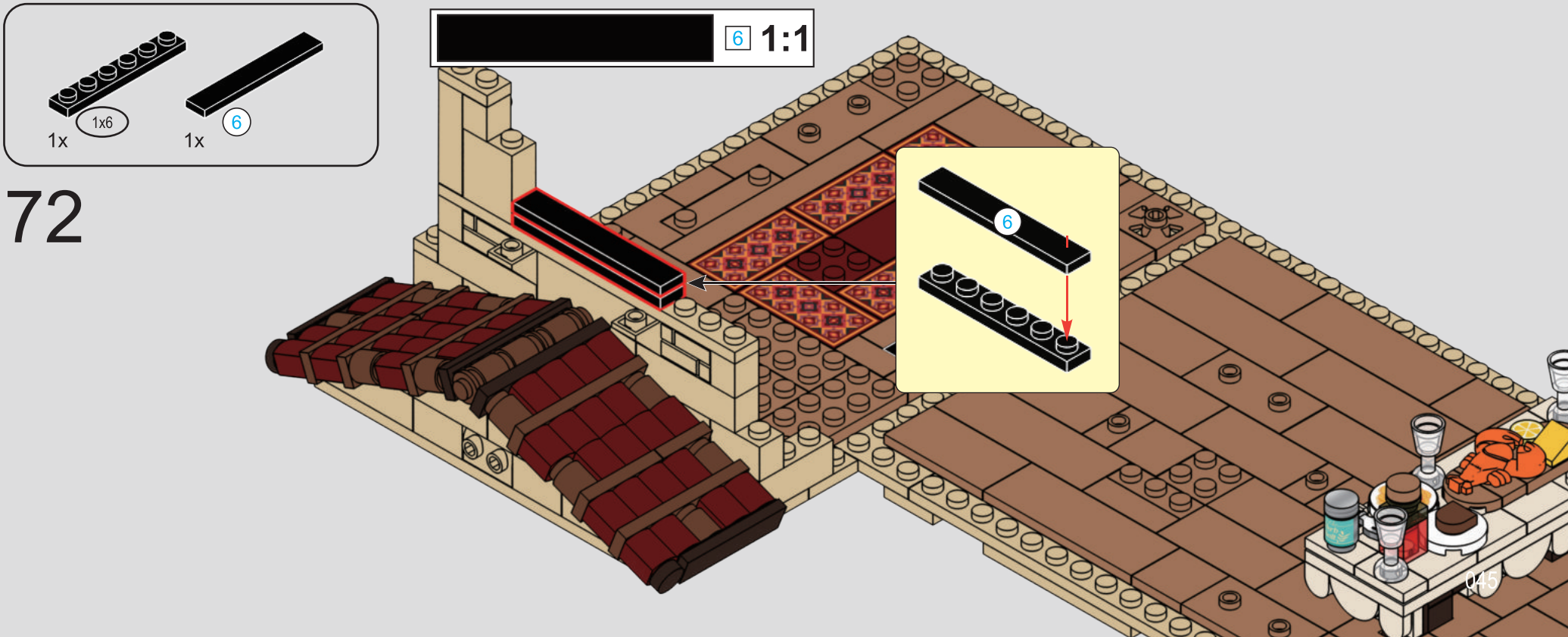

72

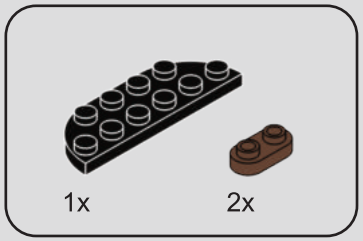

73

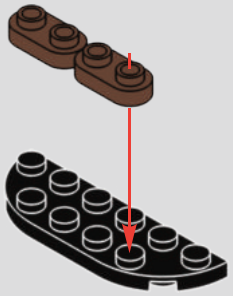



74

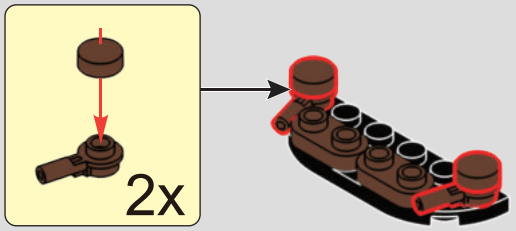

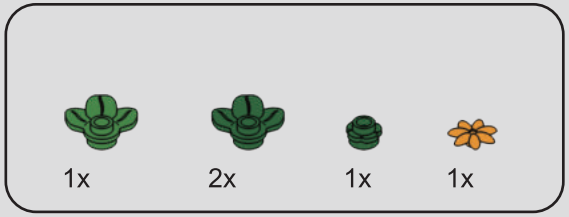

75

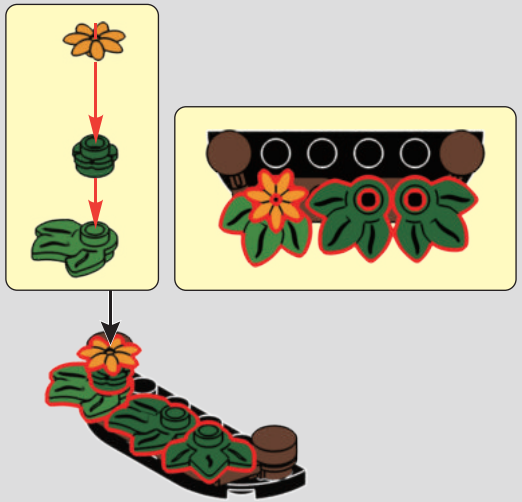

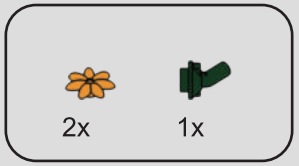

76

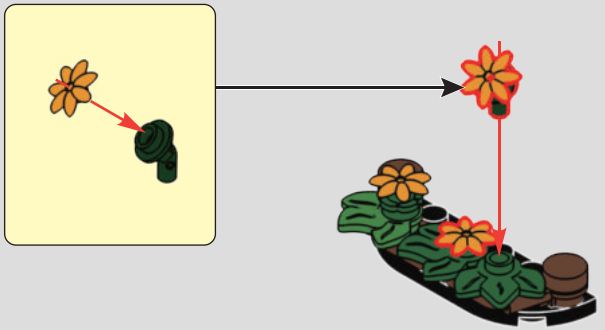

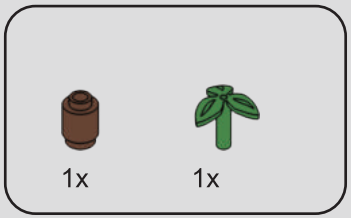

77

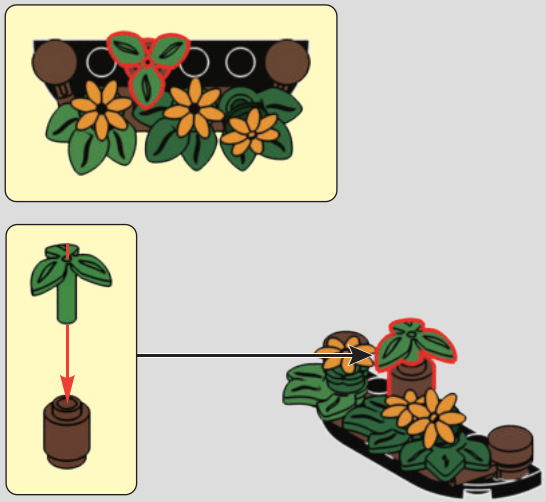

78

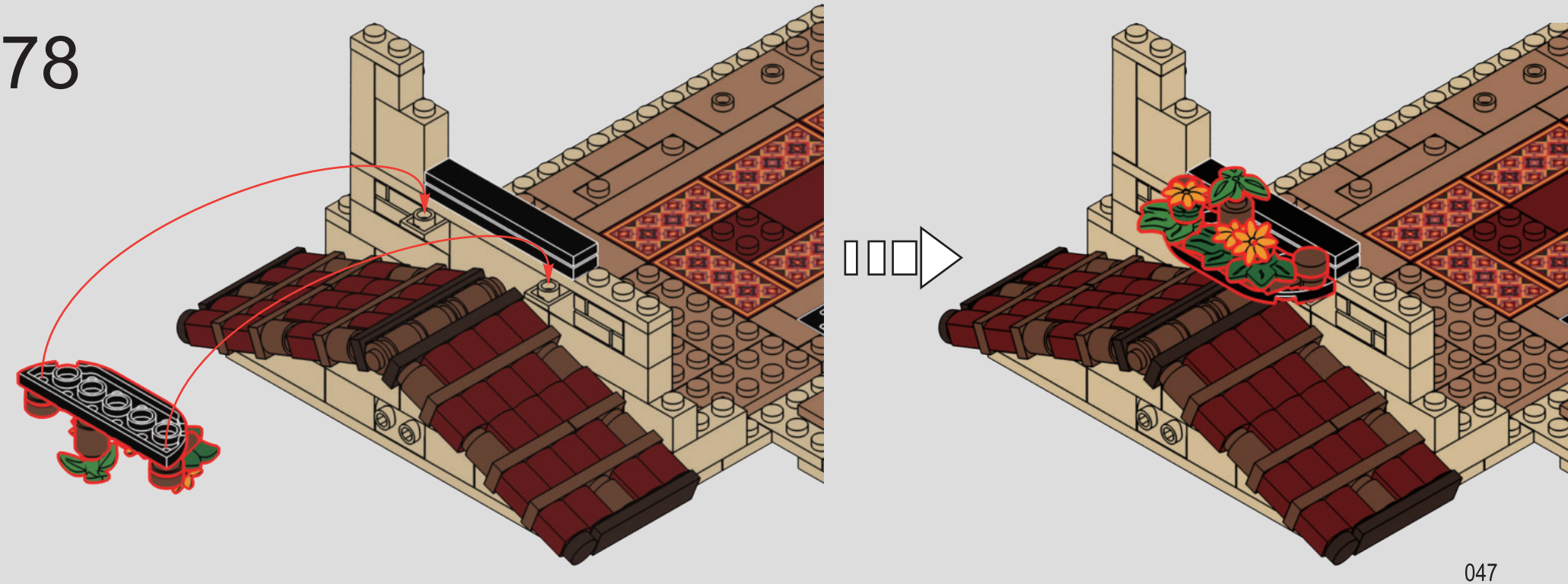

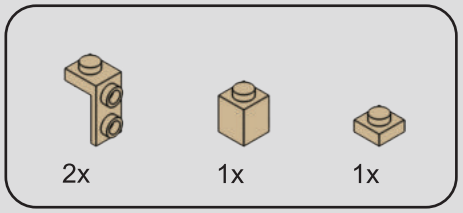

79

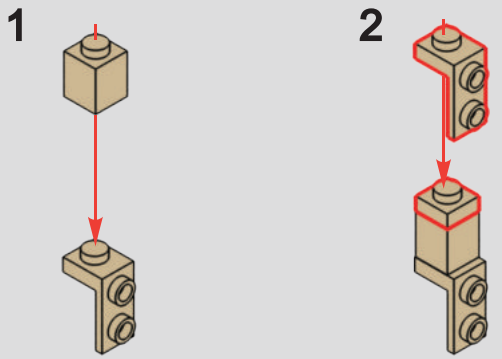

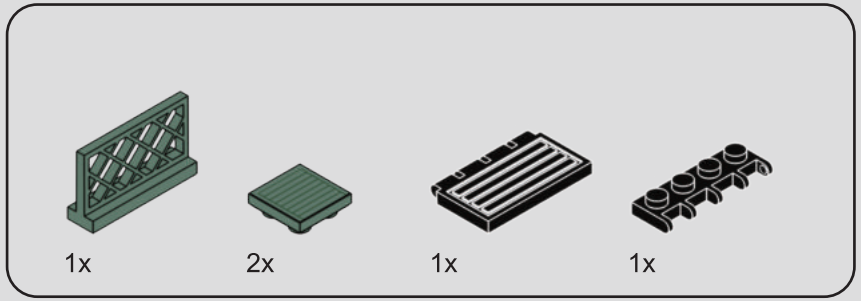

80

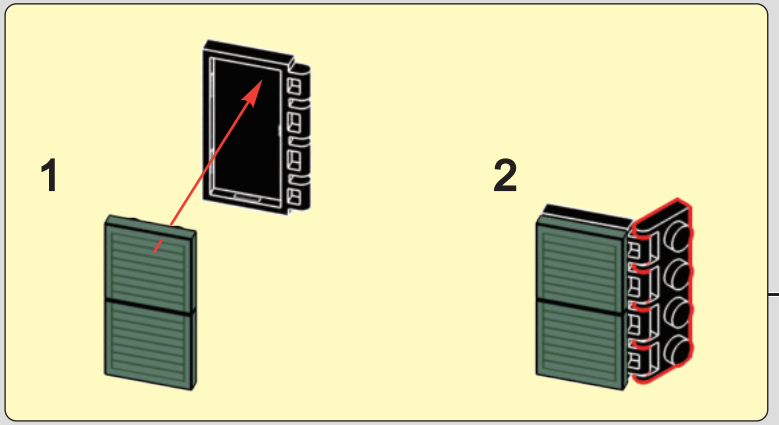

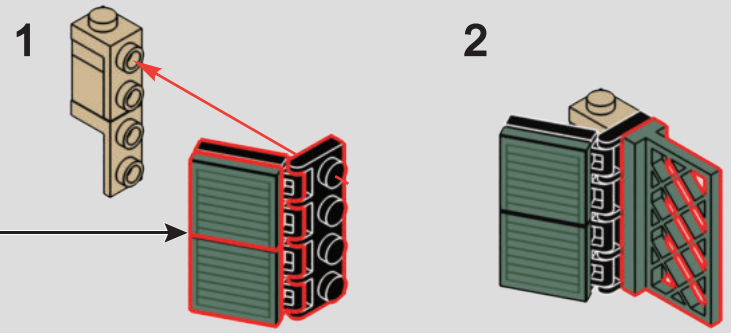

81

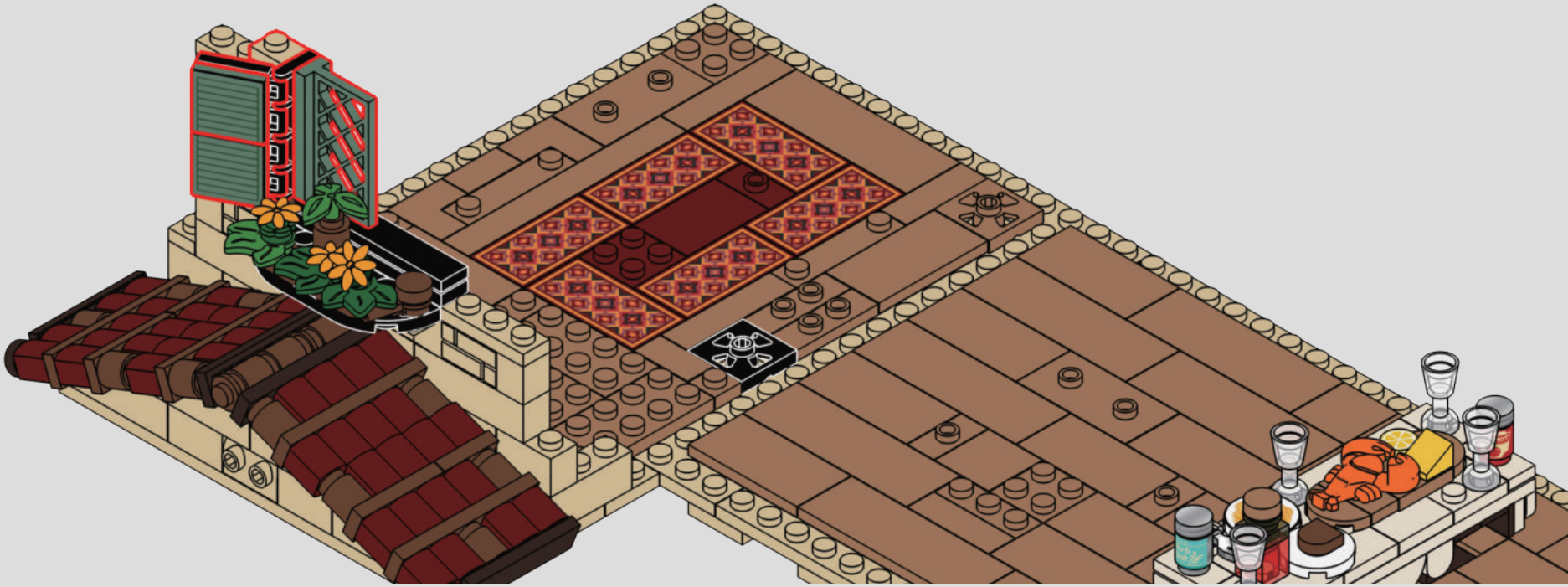

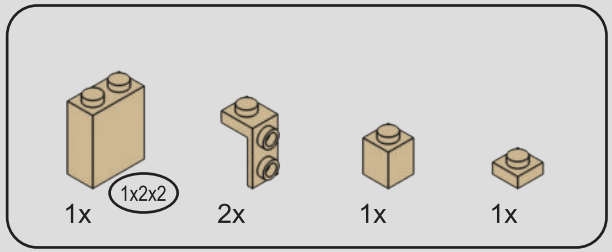

82

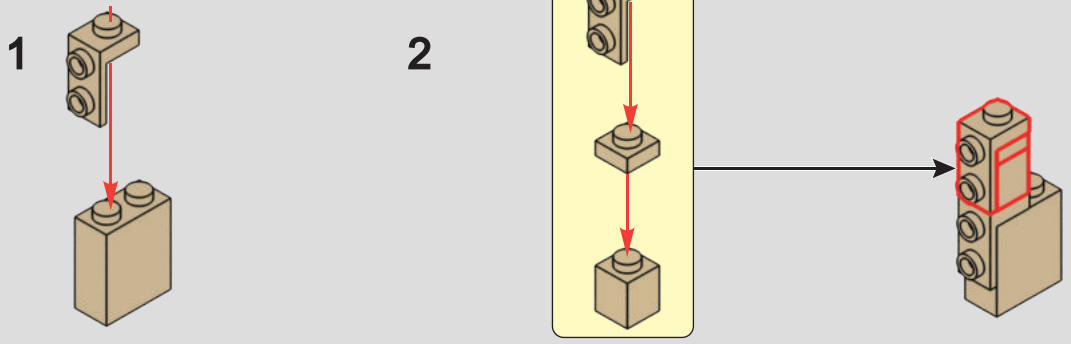

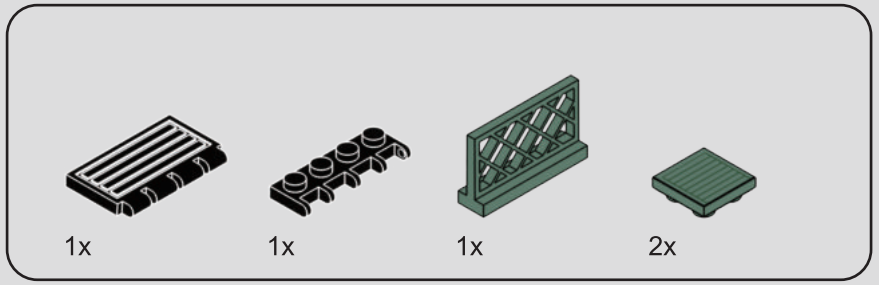

83

84

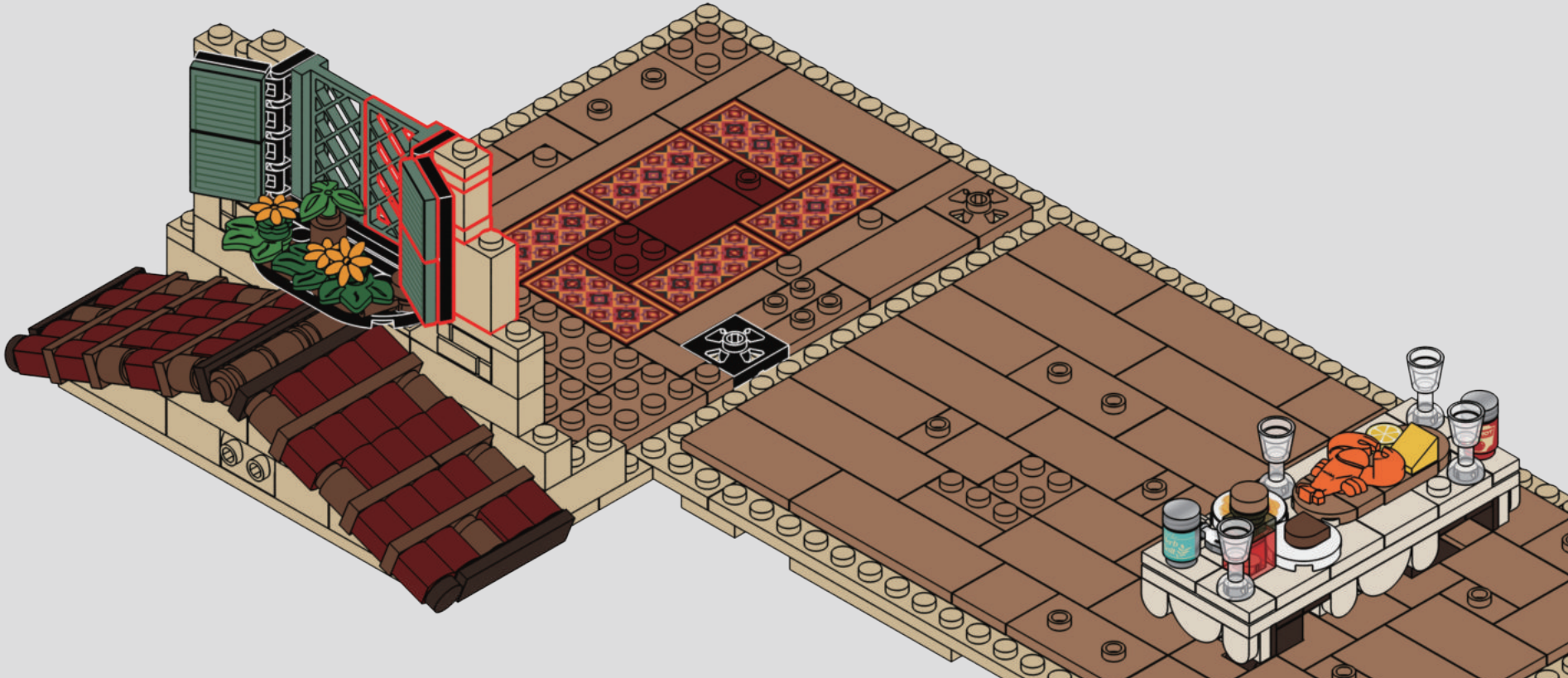

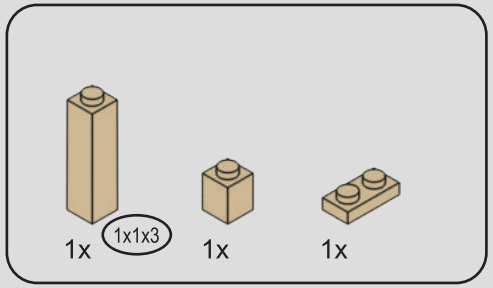

85

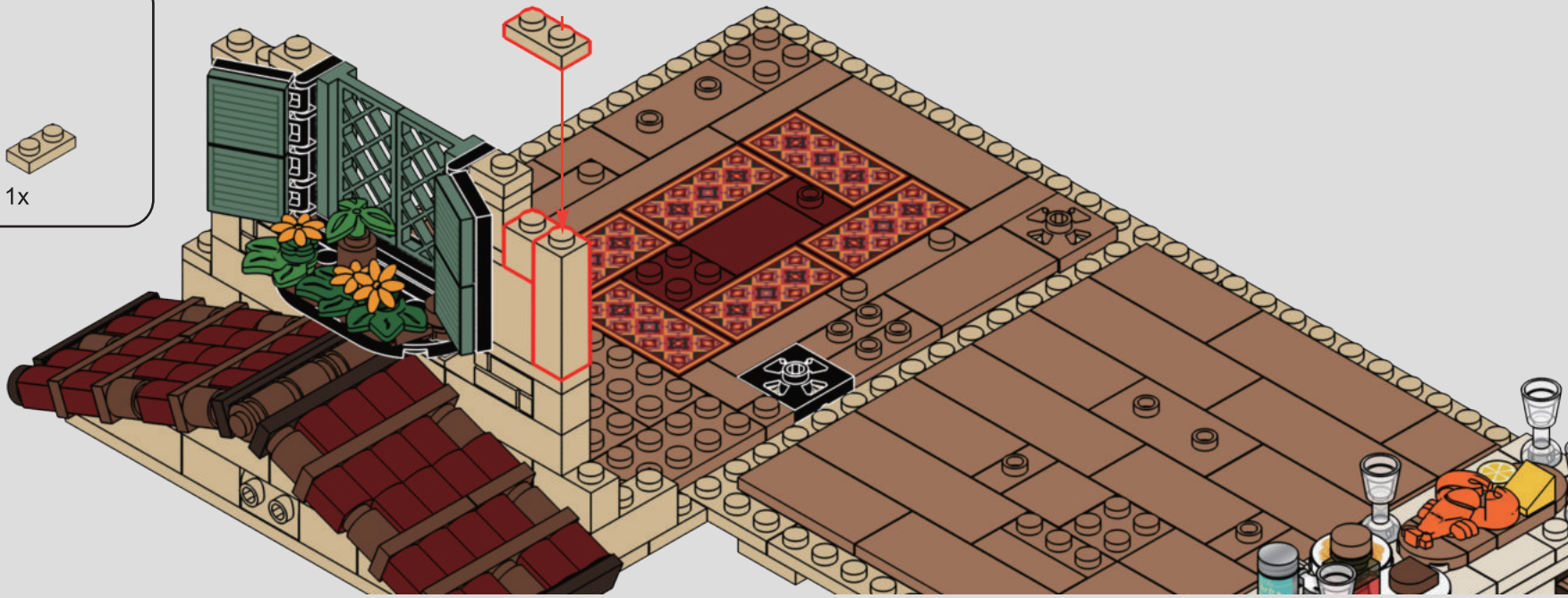

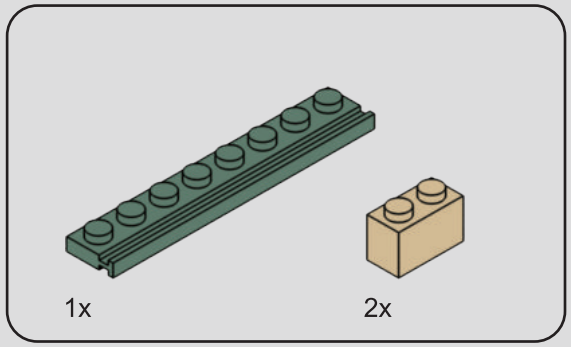

86

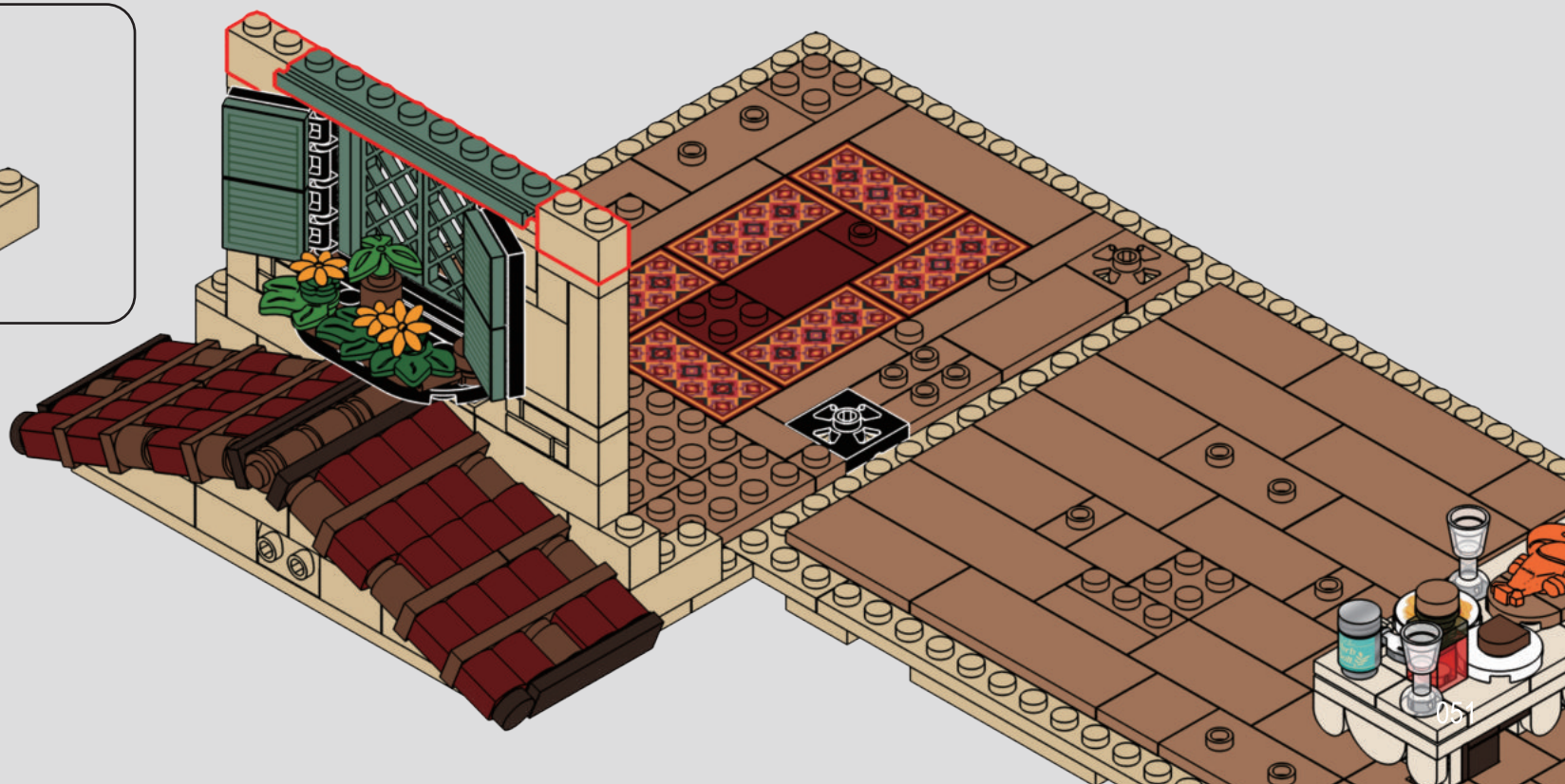

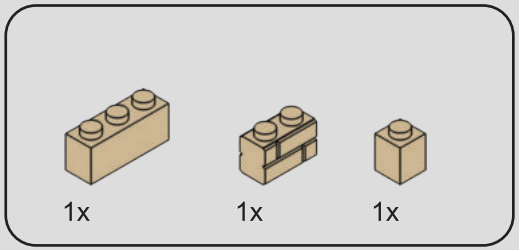

87

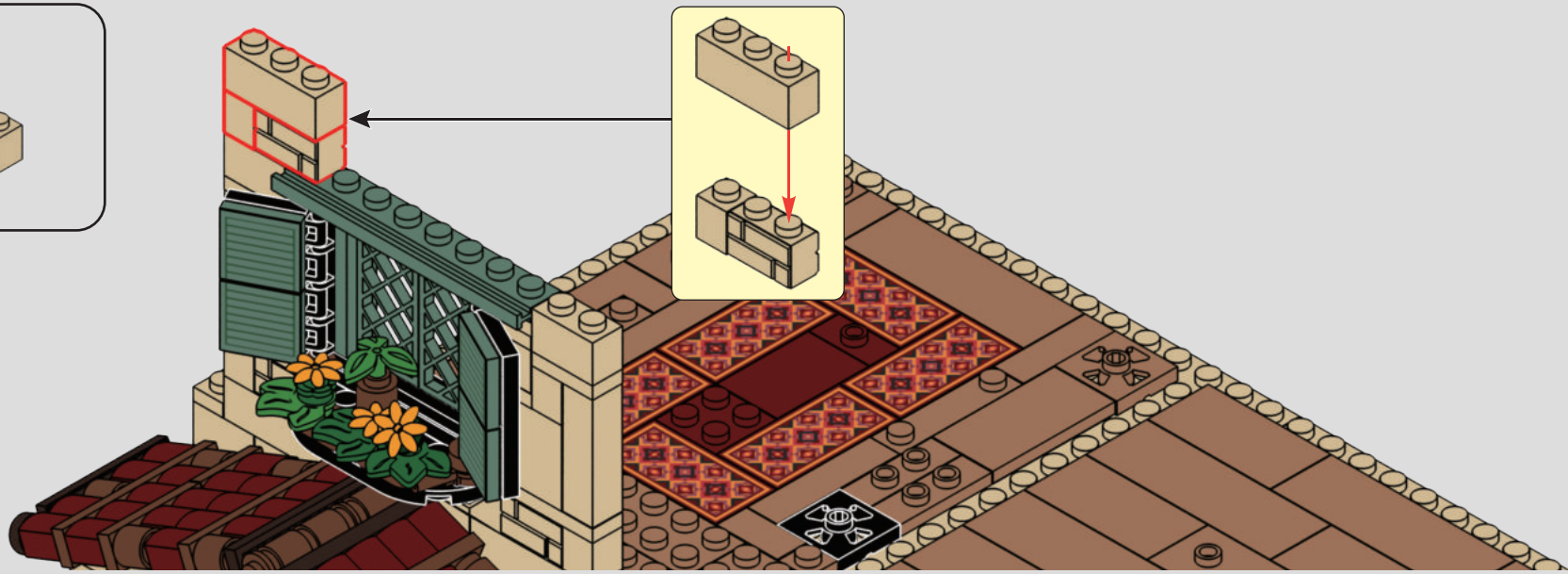

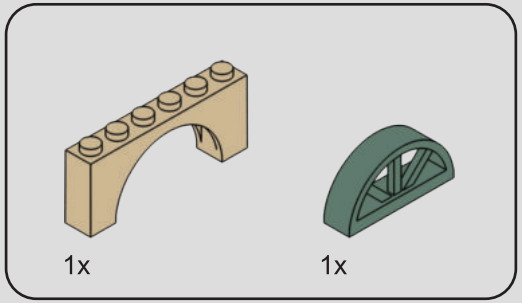

88



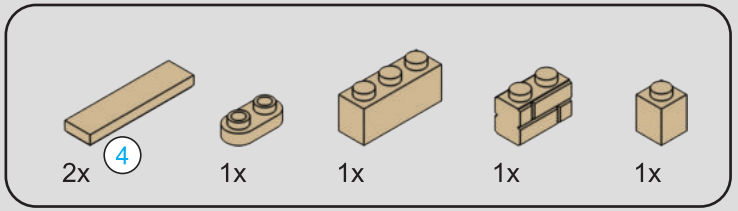

89

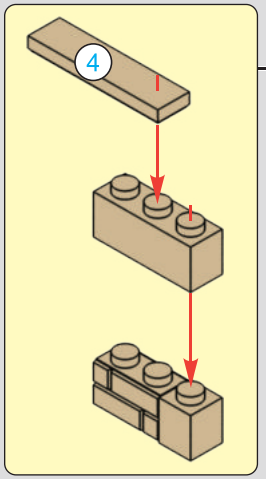

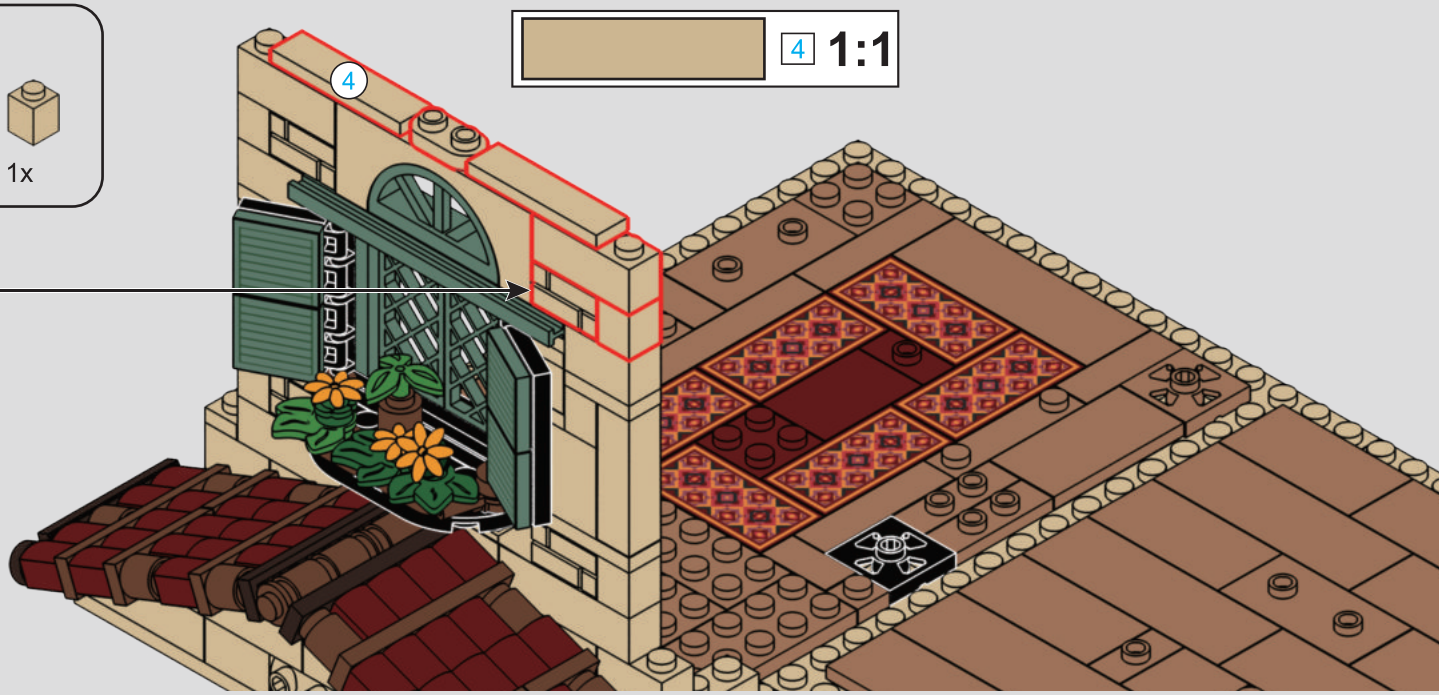

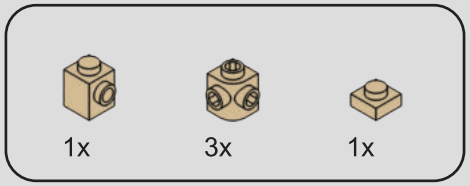

90

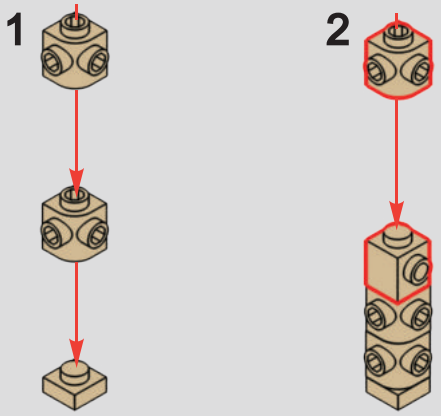

91

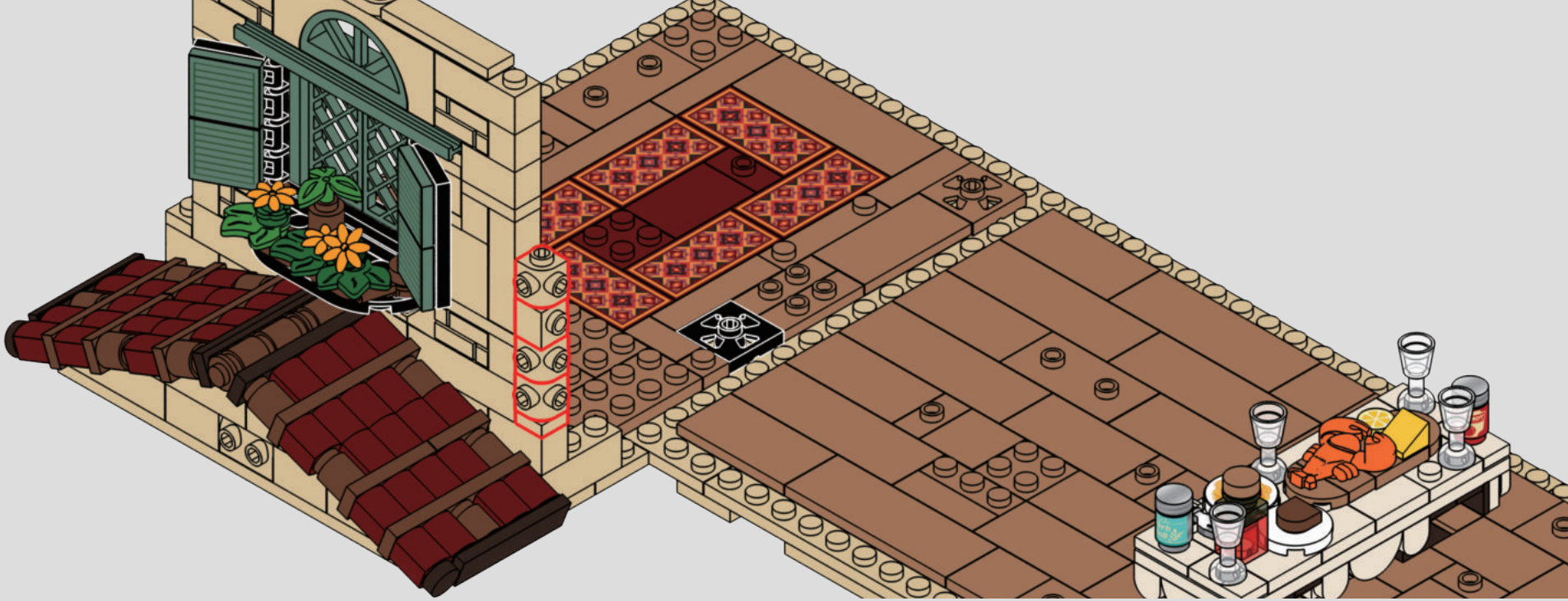

92

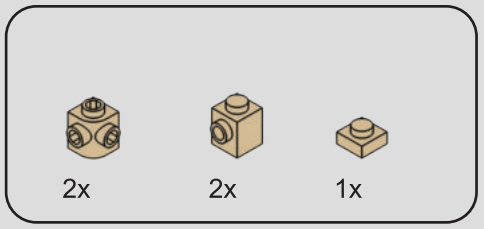

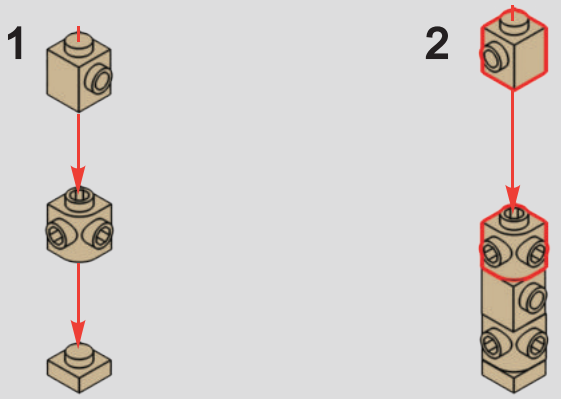

93

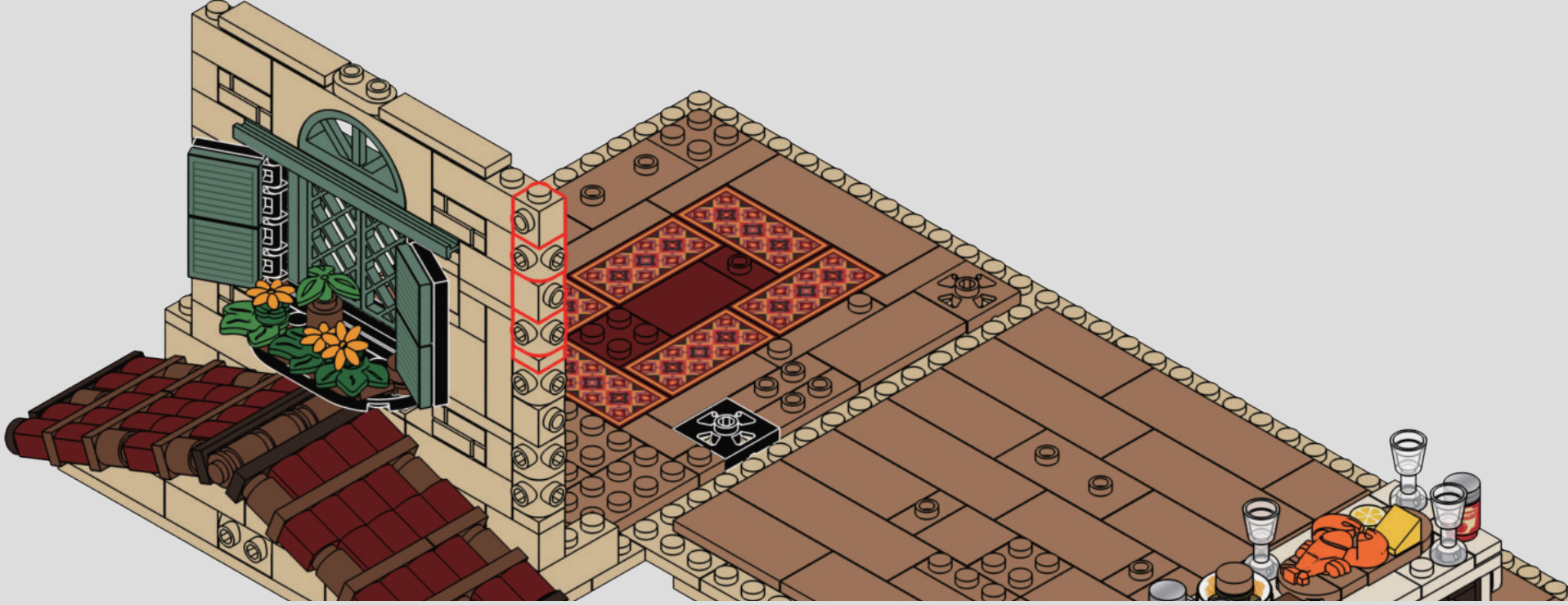



94

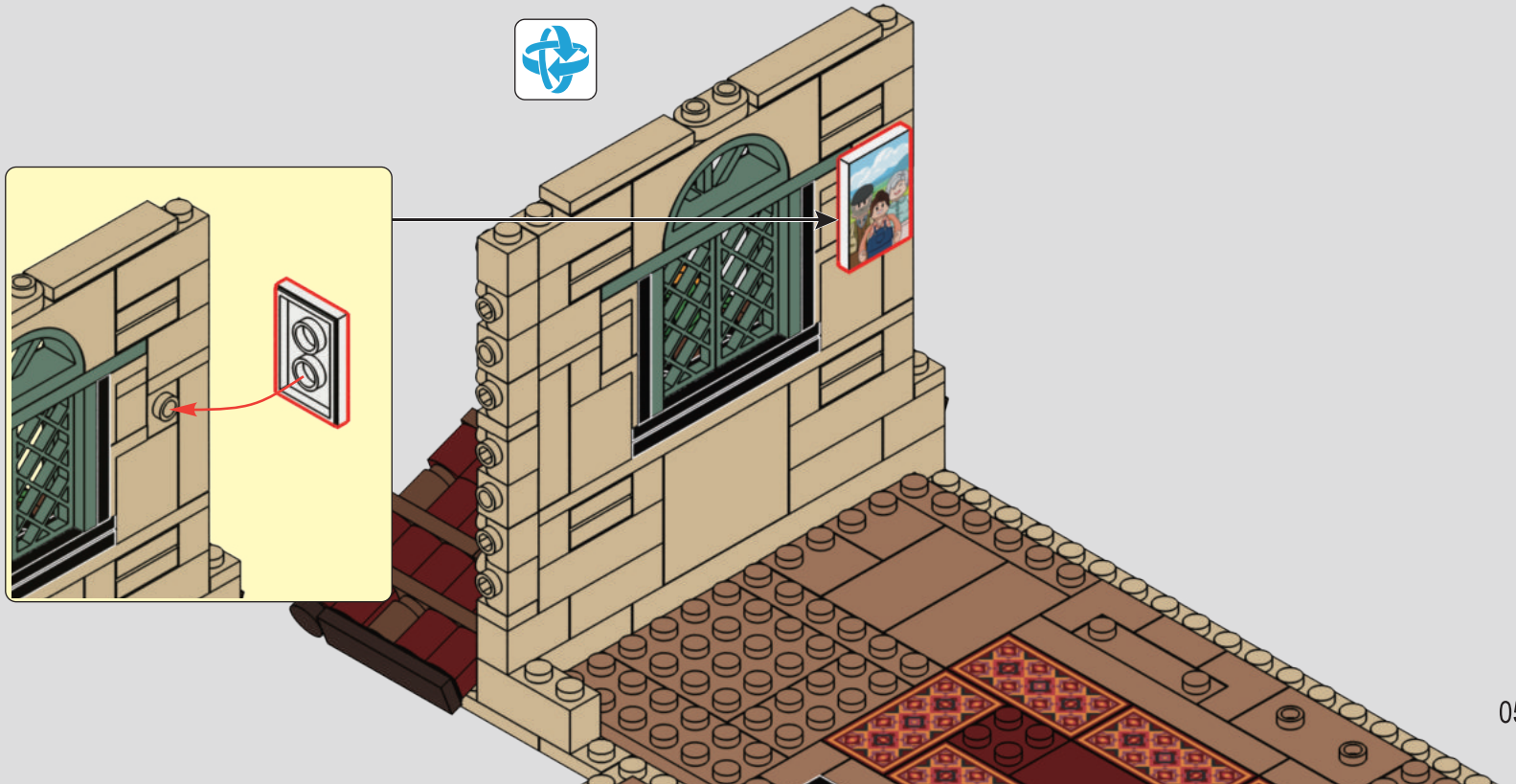

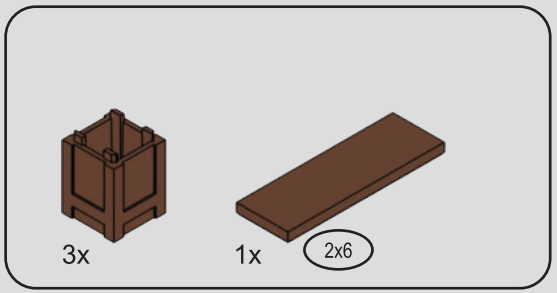

95

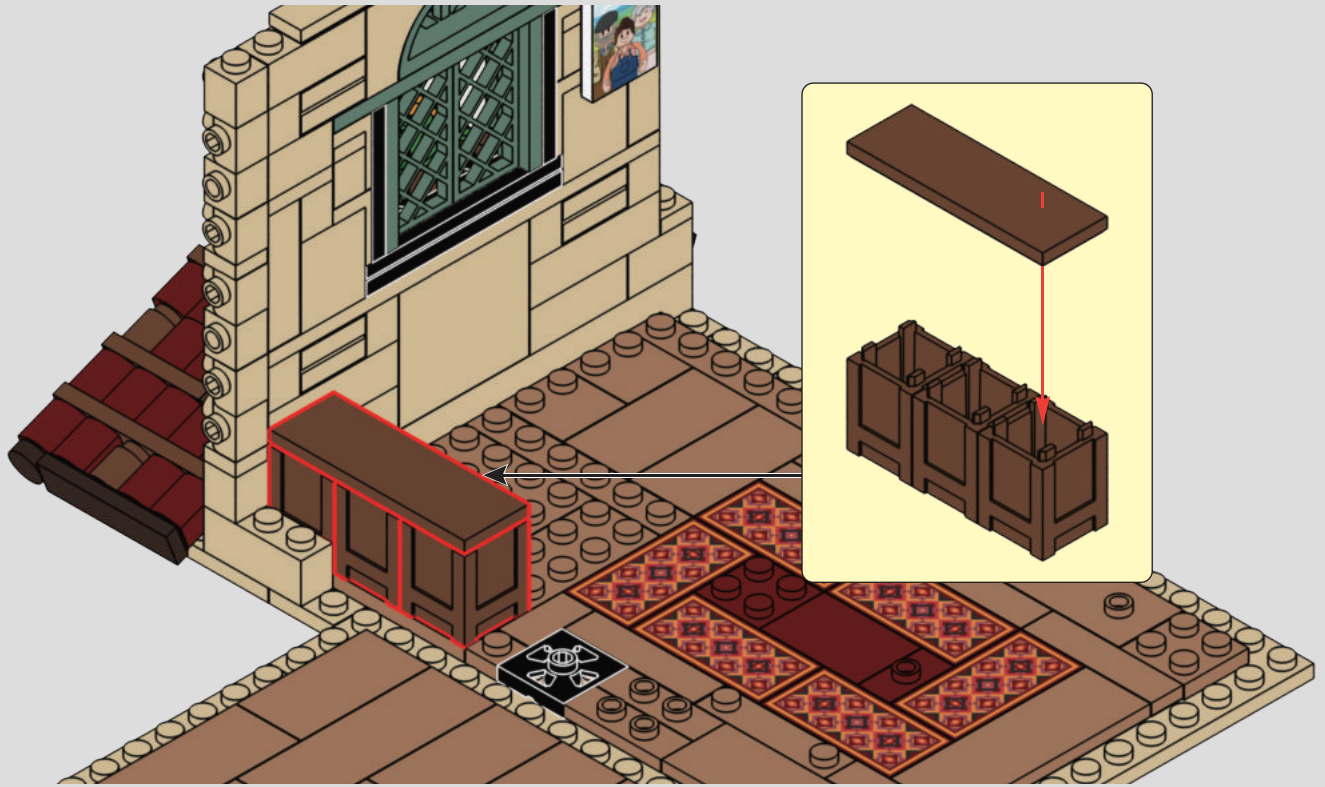

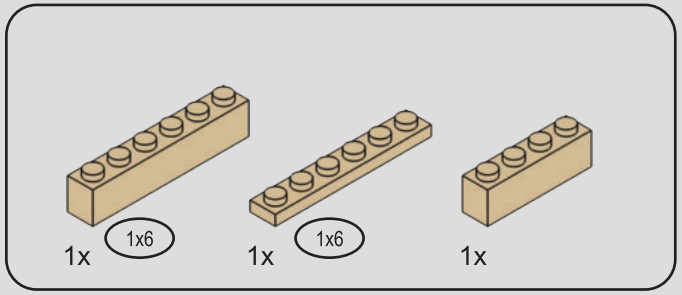

96

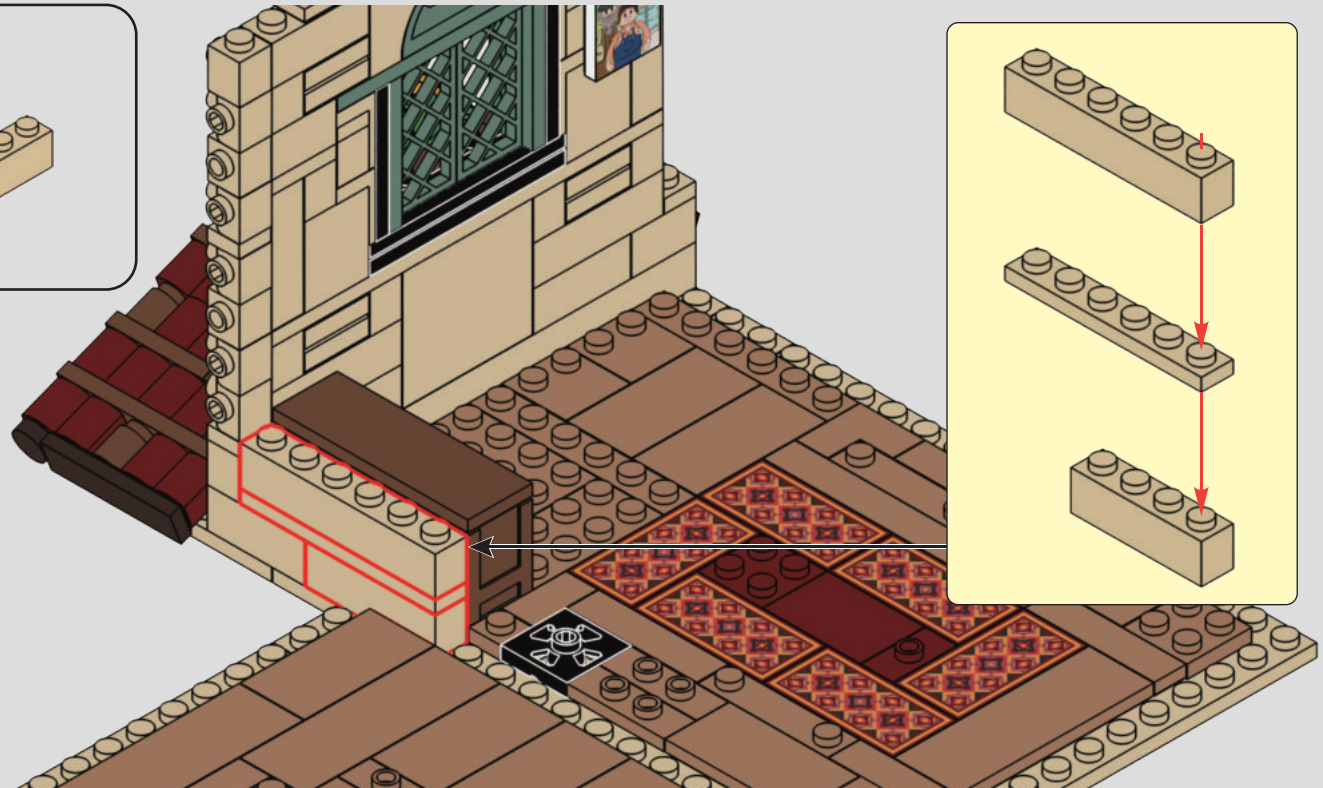

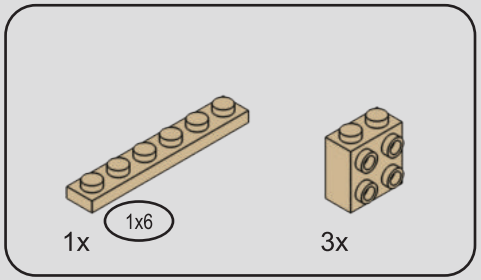

97

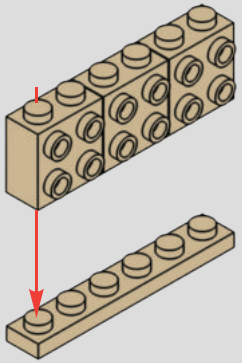

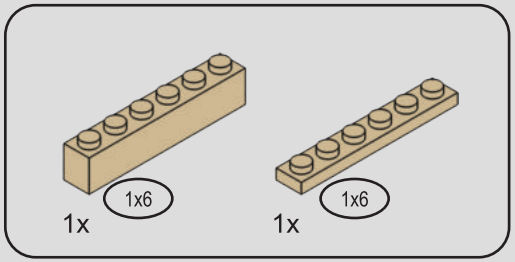

98

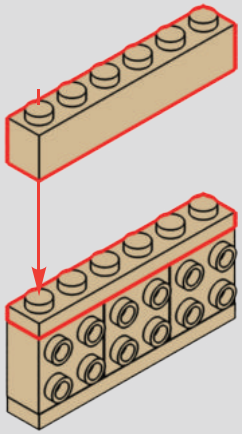

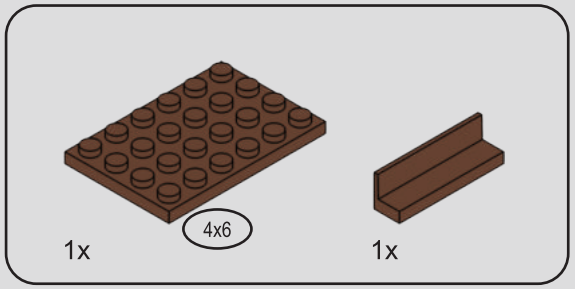

99

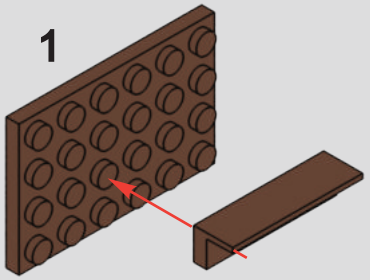

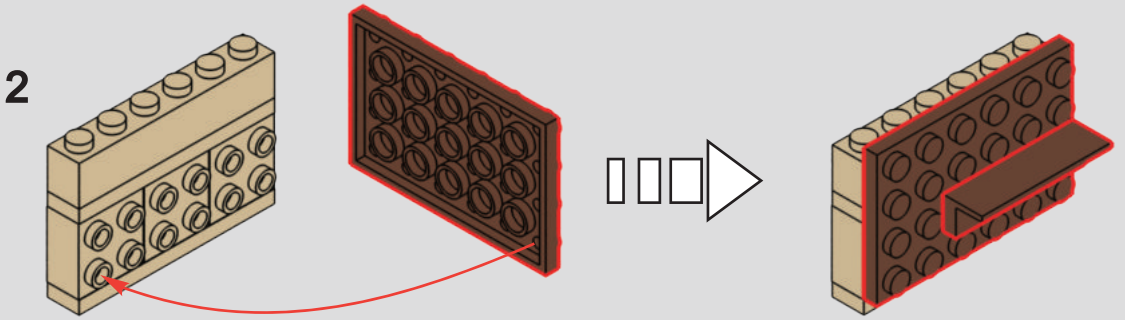

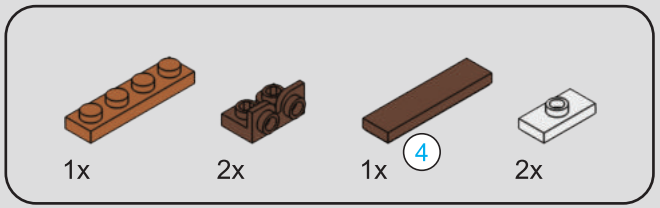



100

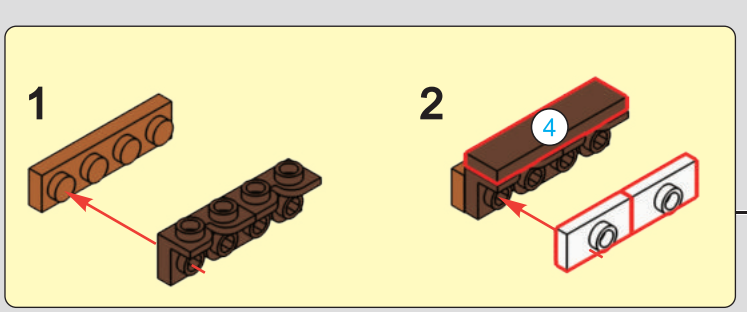

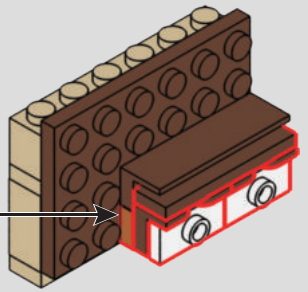

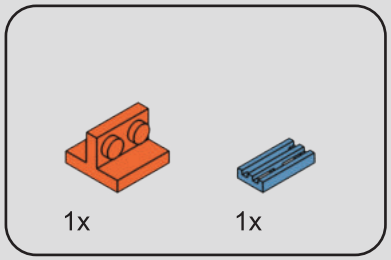

101

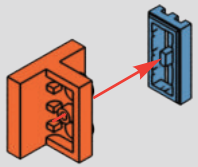

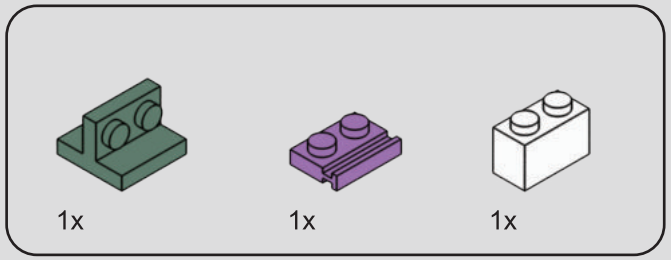

102

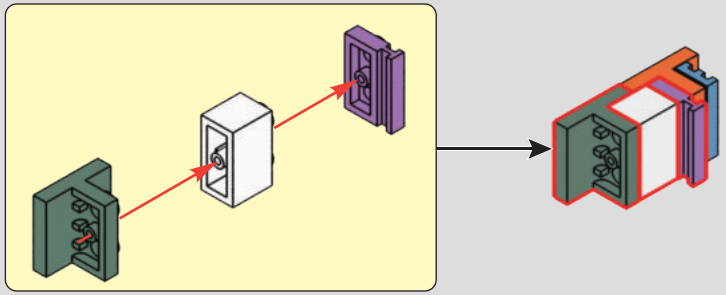

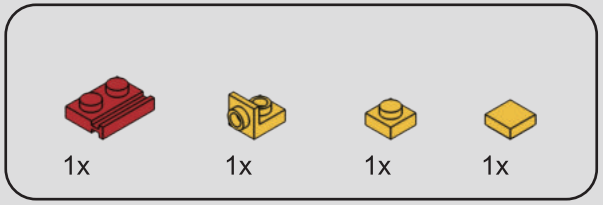

103

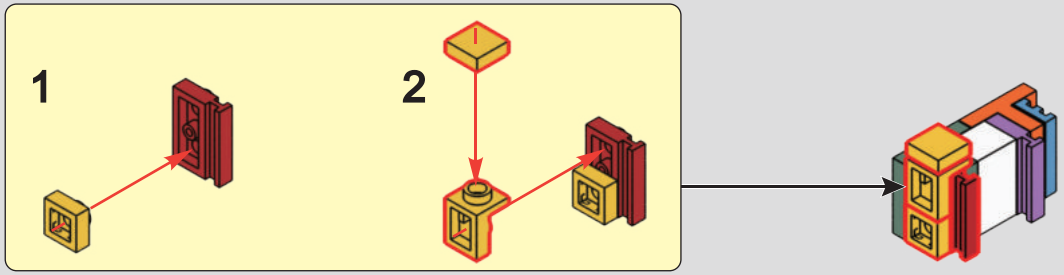

104

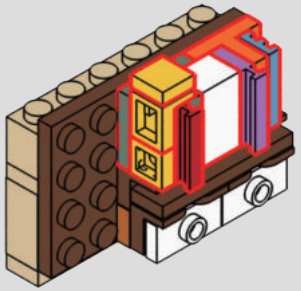

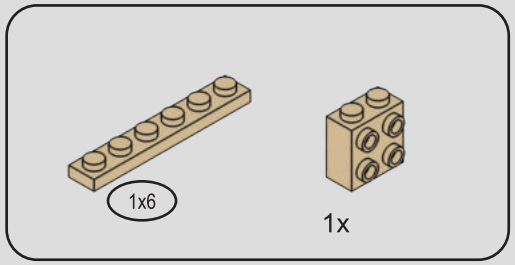

105

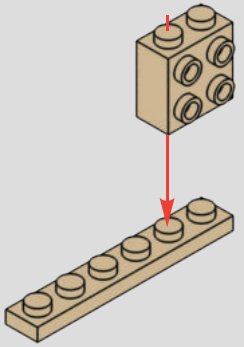

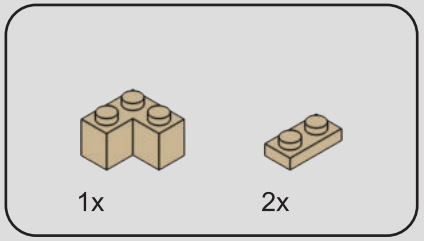

106

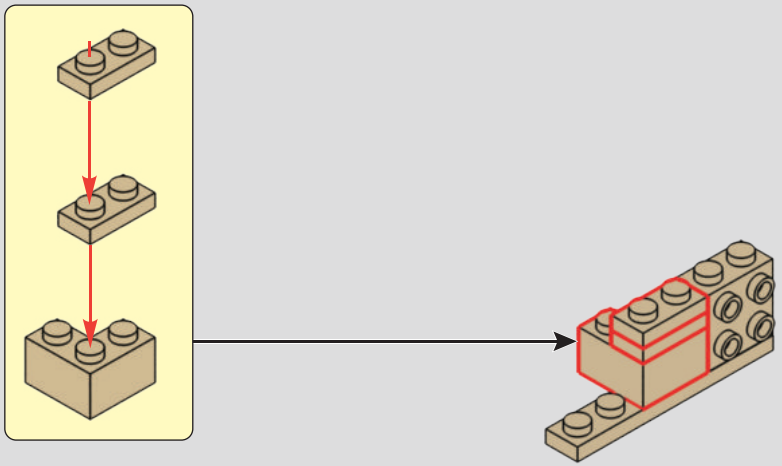

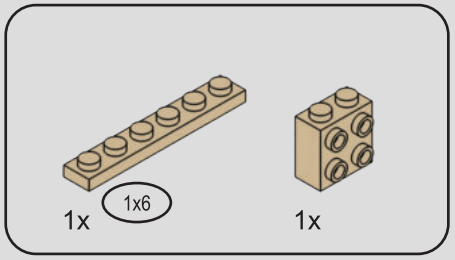

107

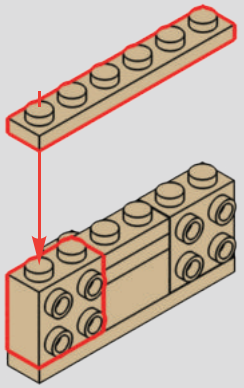

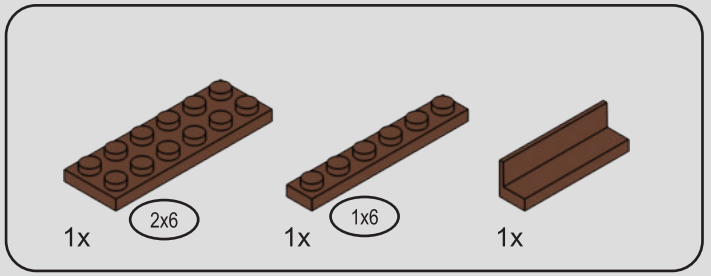

108

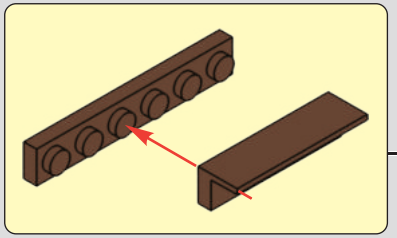

1

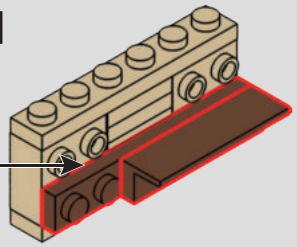

2

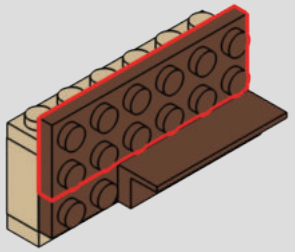

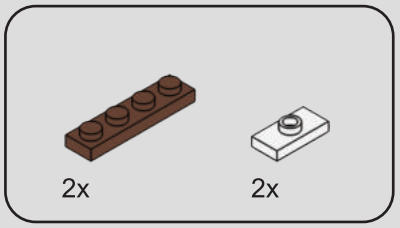

109

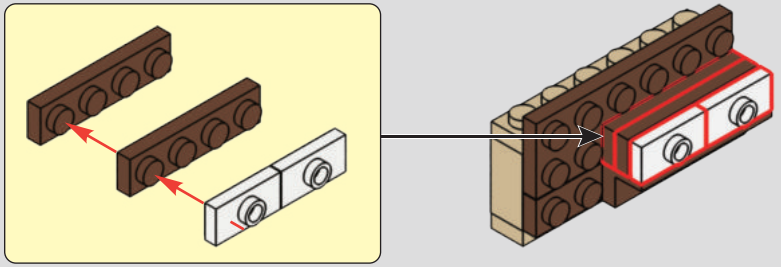

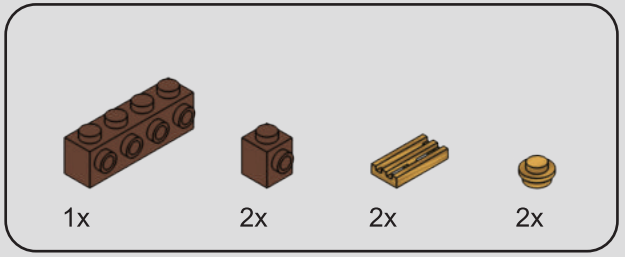

110

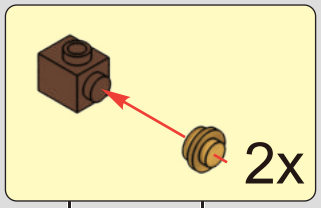

1

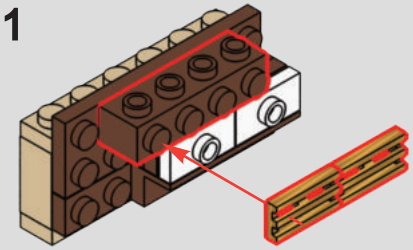

2

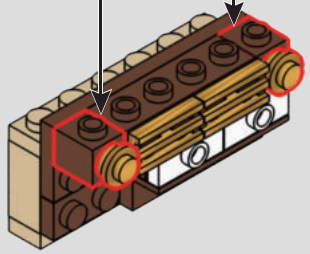

111

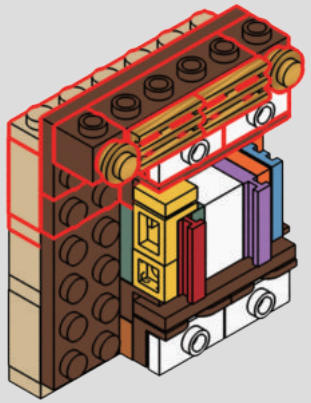

2x



2x

112

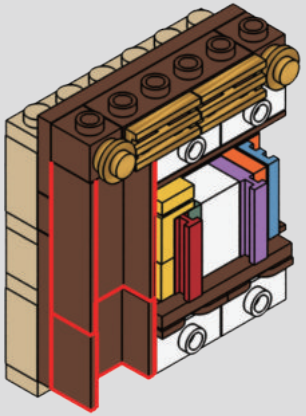

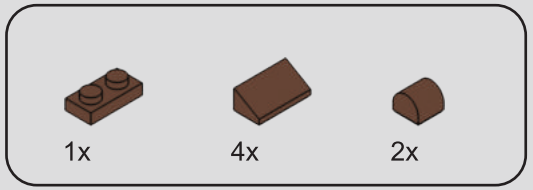

113

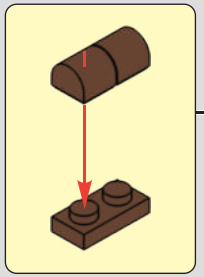

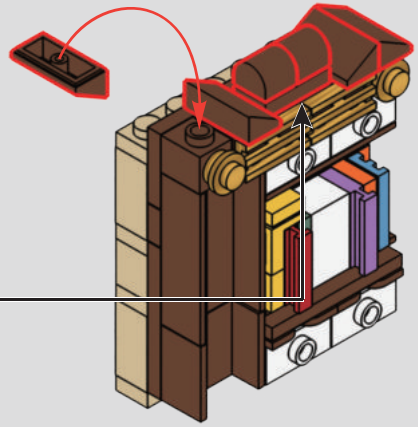

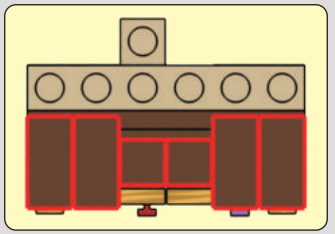

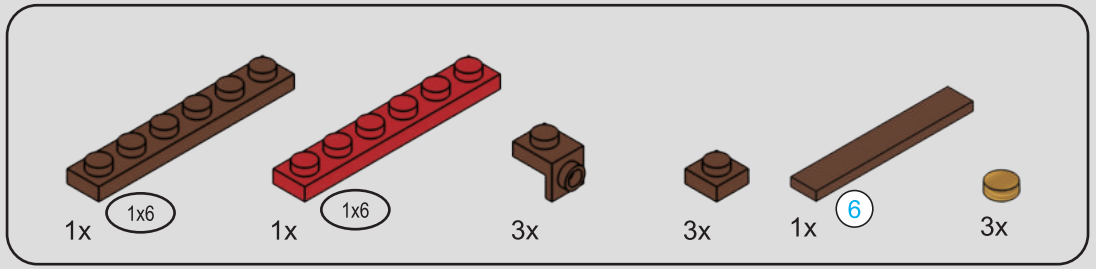



114

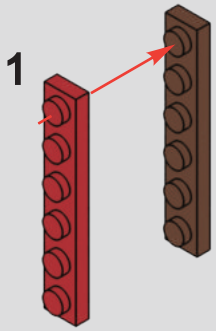



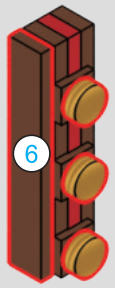

115

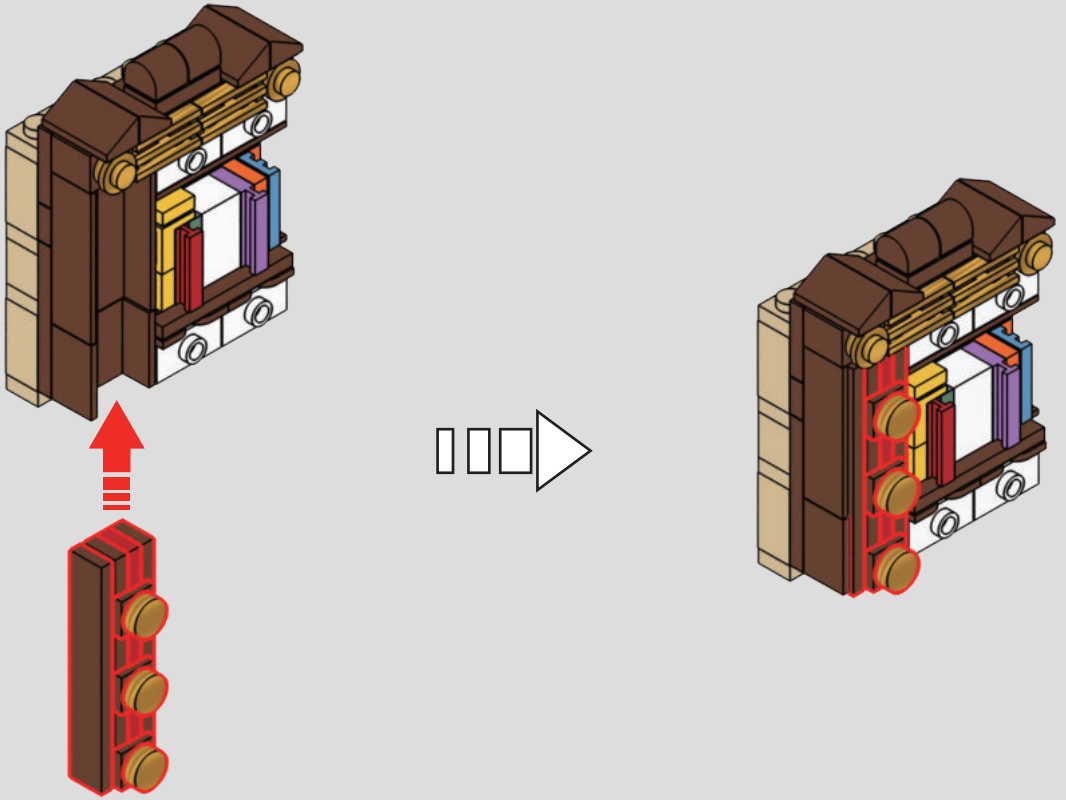

116

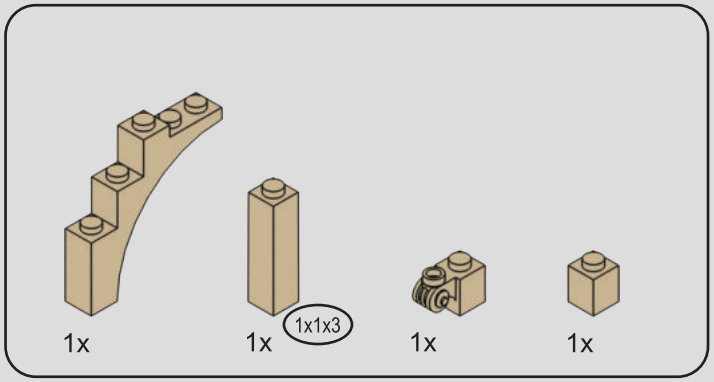

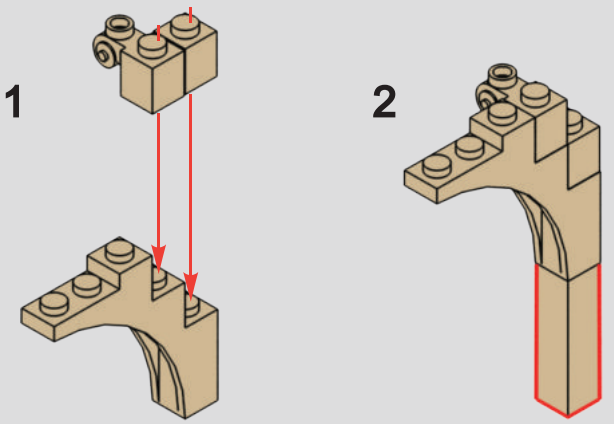

117

1

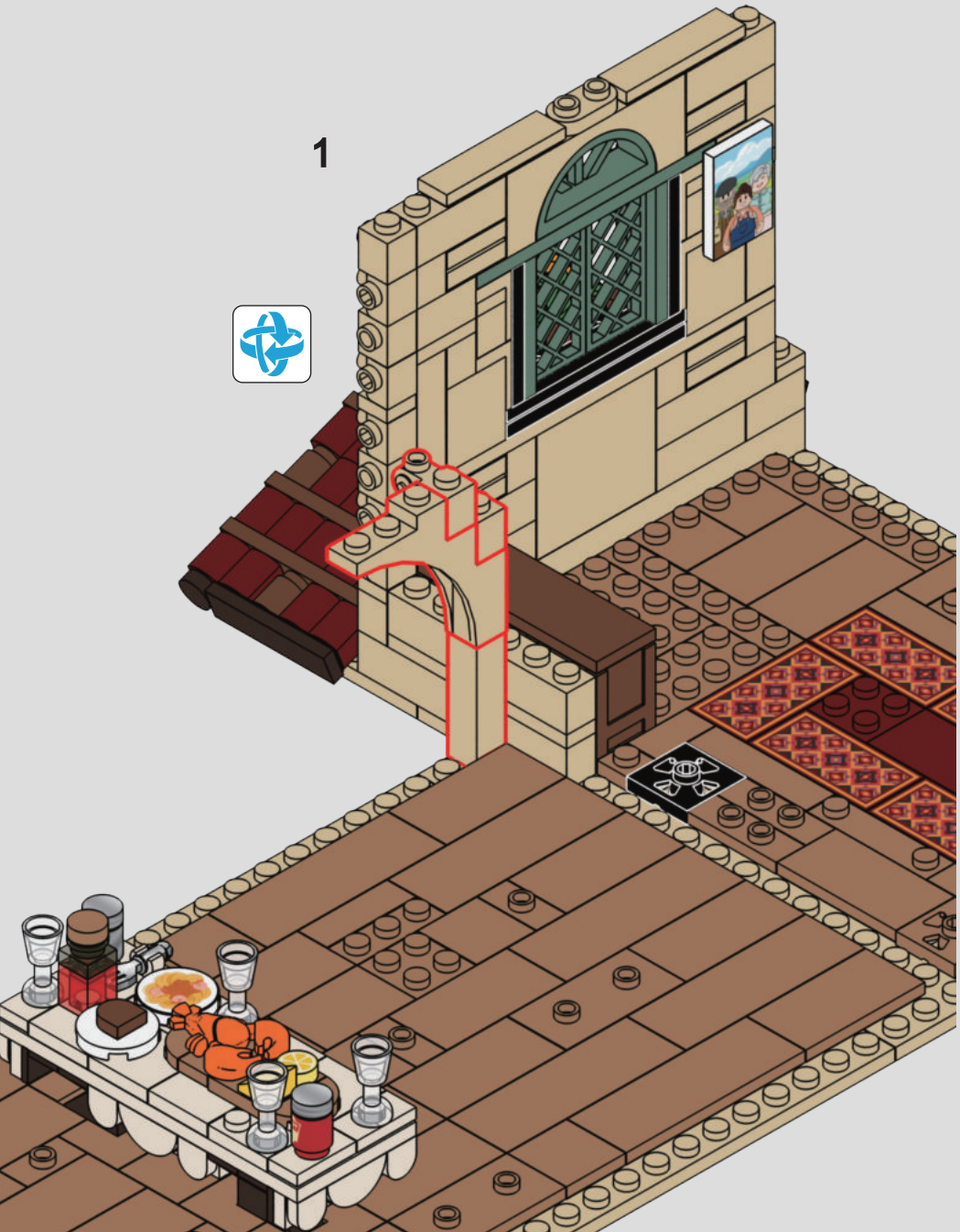

2



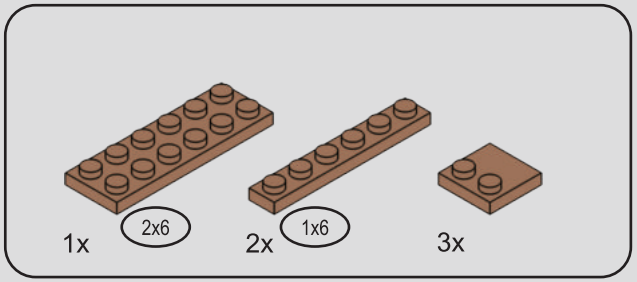

118

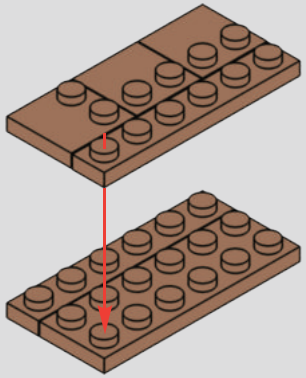

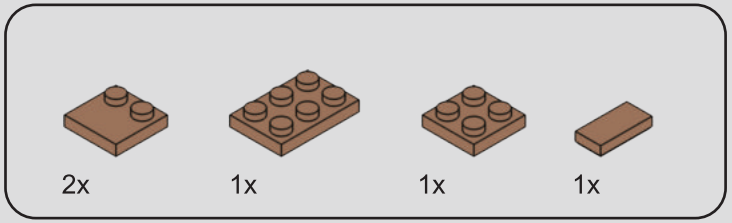

119

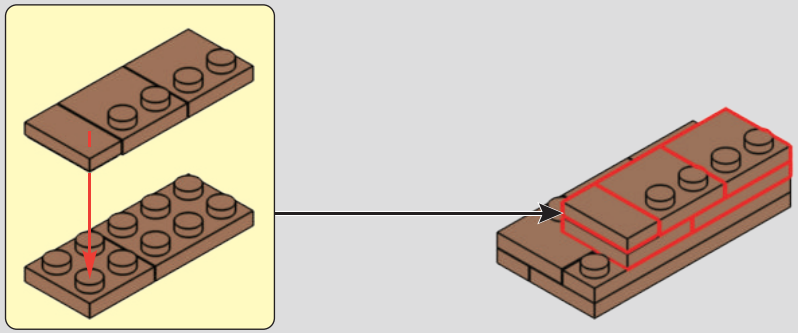

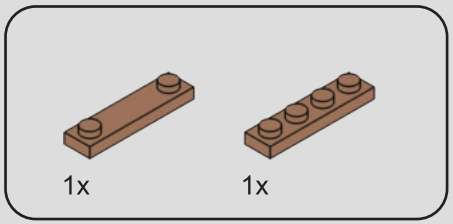

120

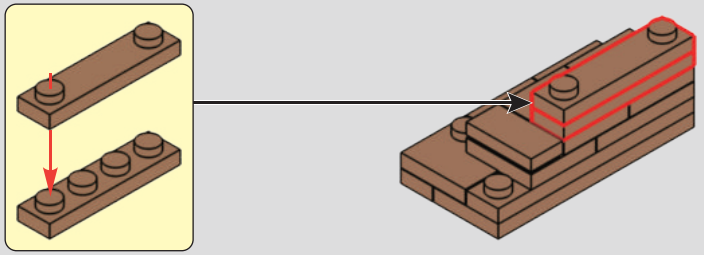

121

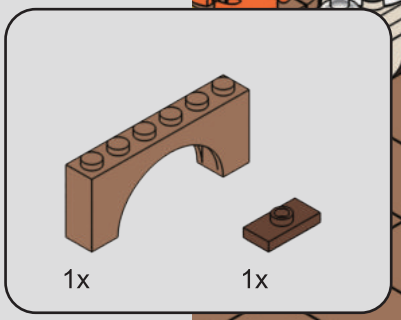

122

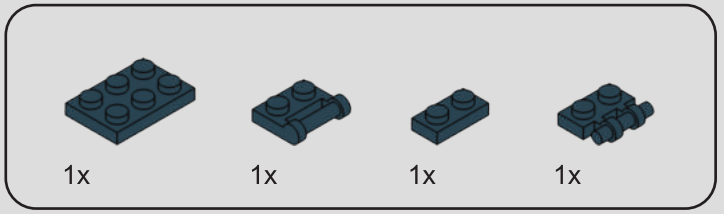

123

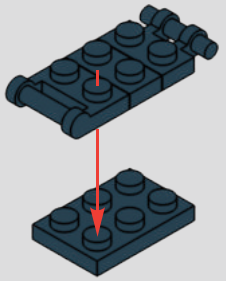

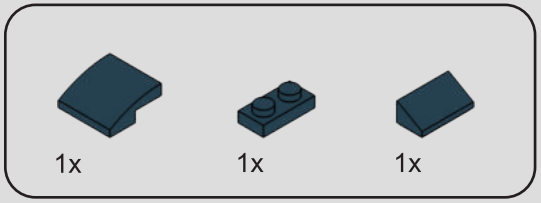

124

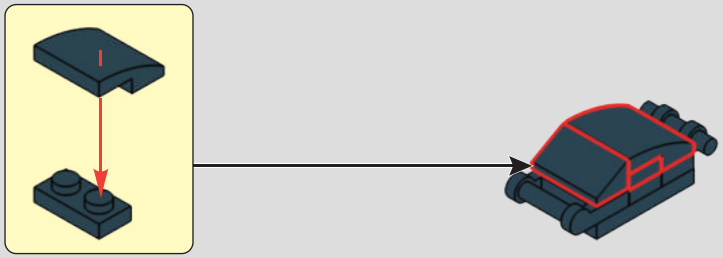

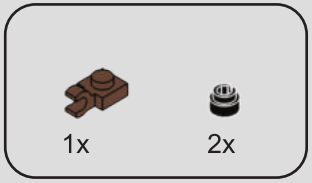

125

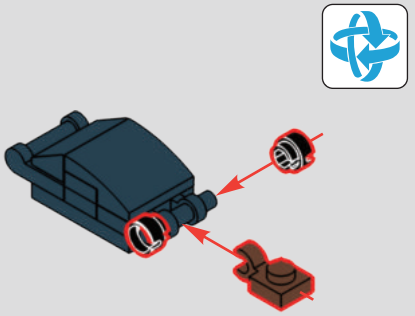

126



127

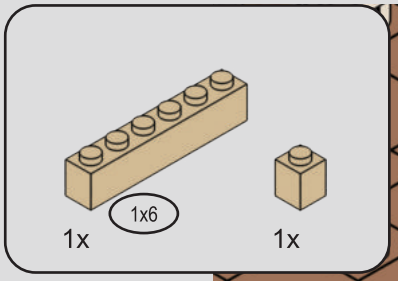

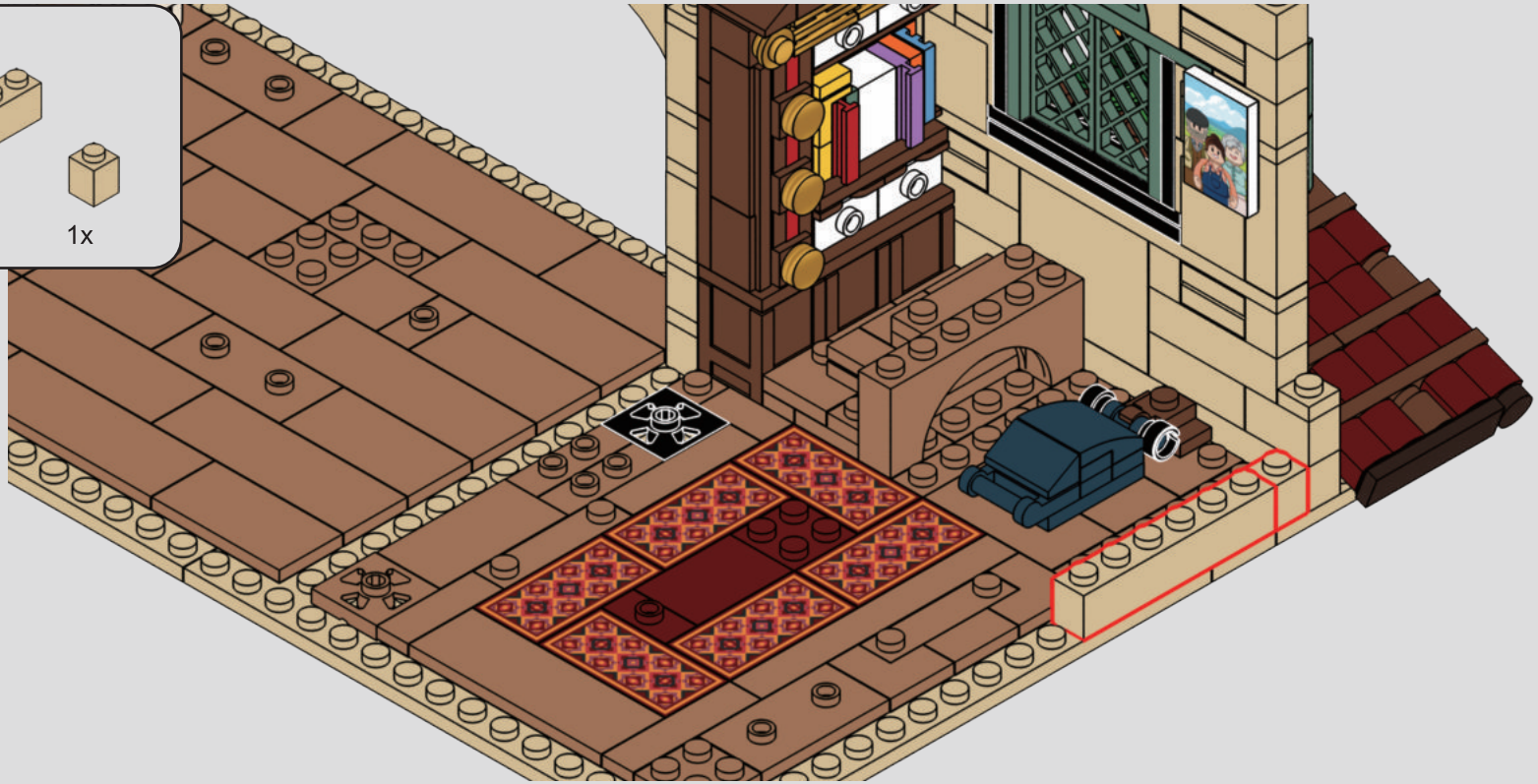

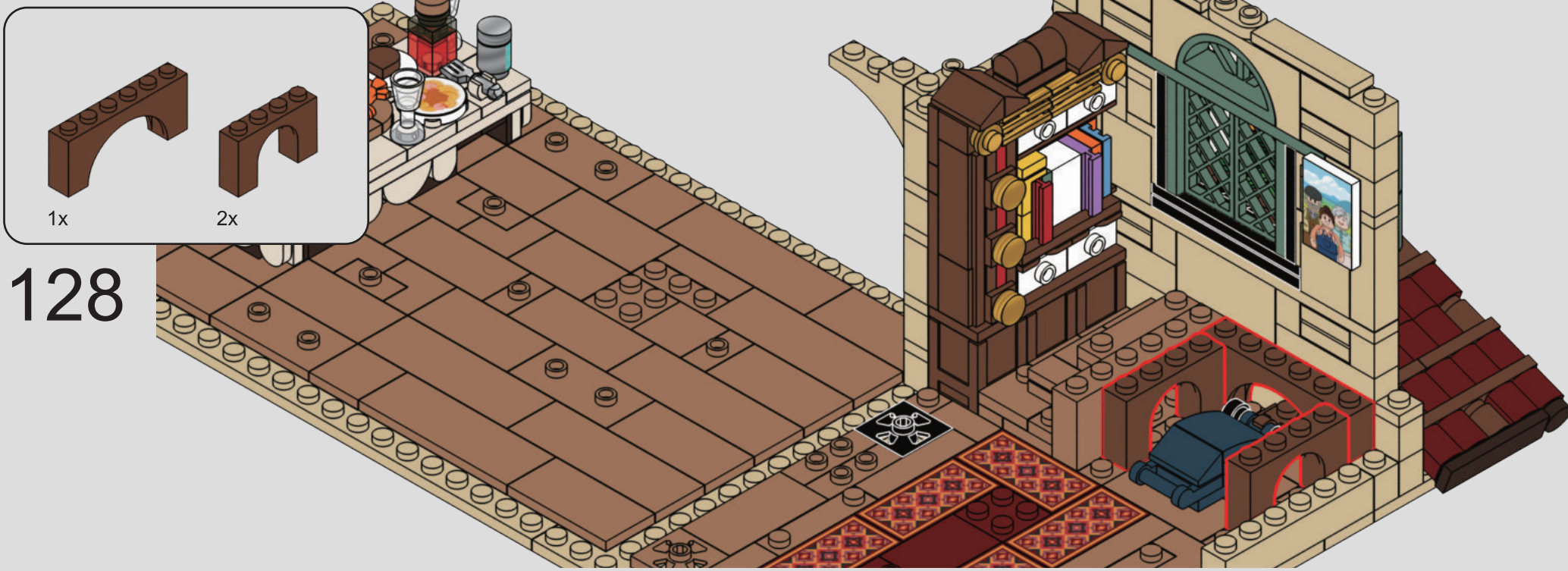

128



129

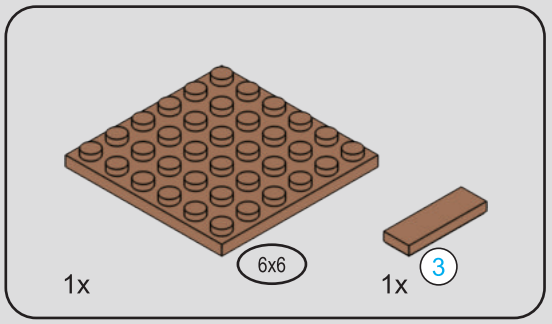

130

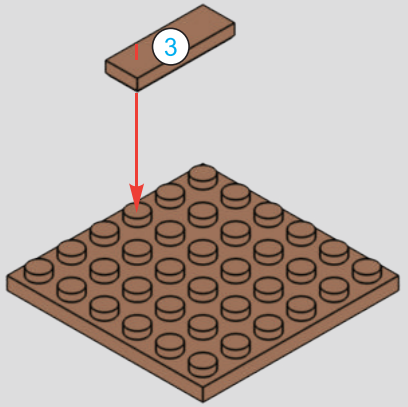

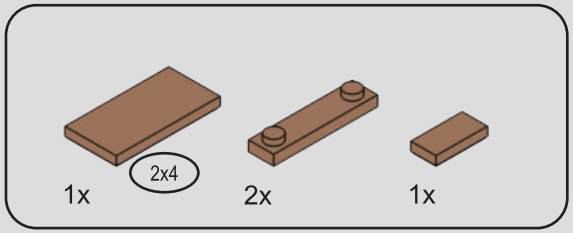

131

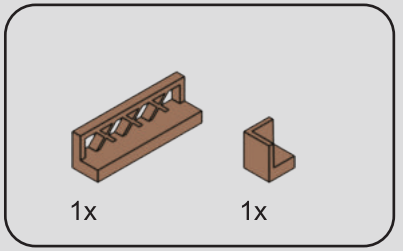

132

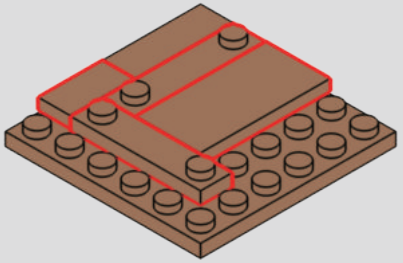

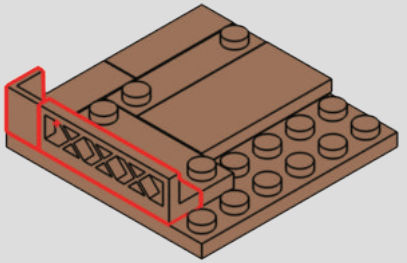

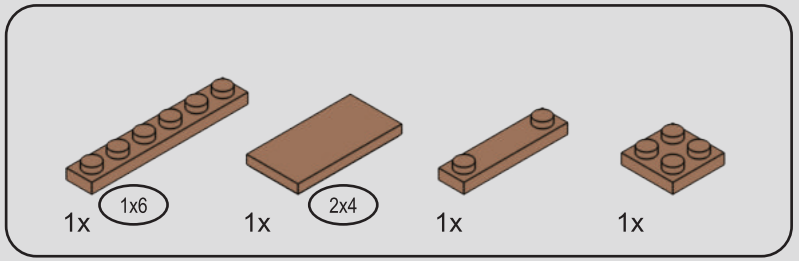

133

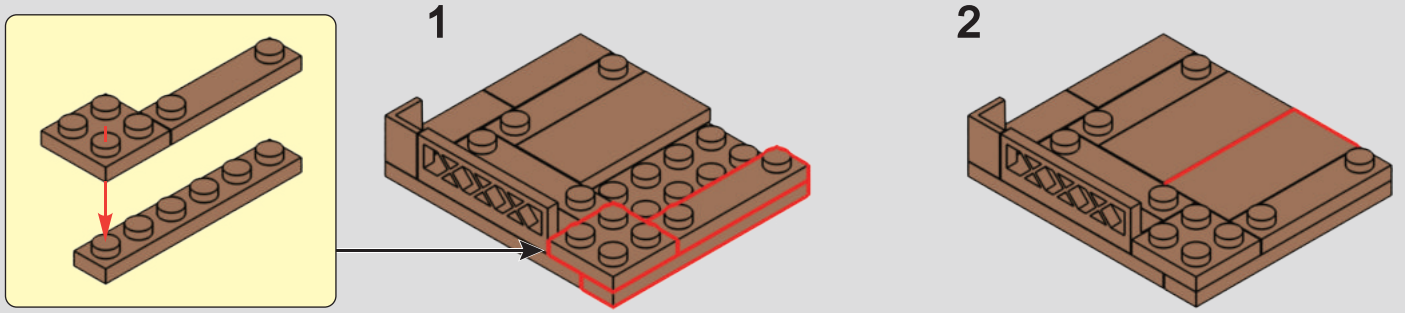

134

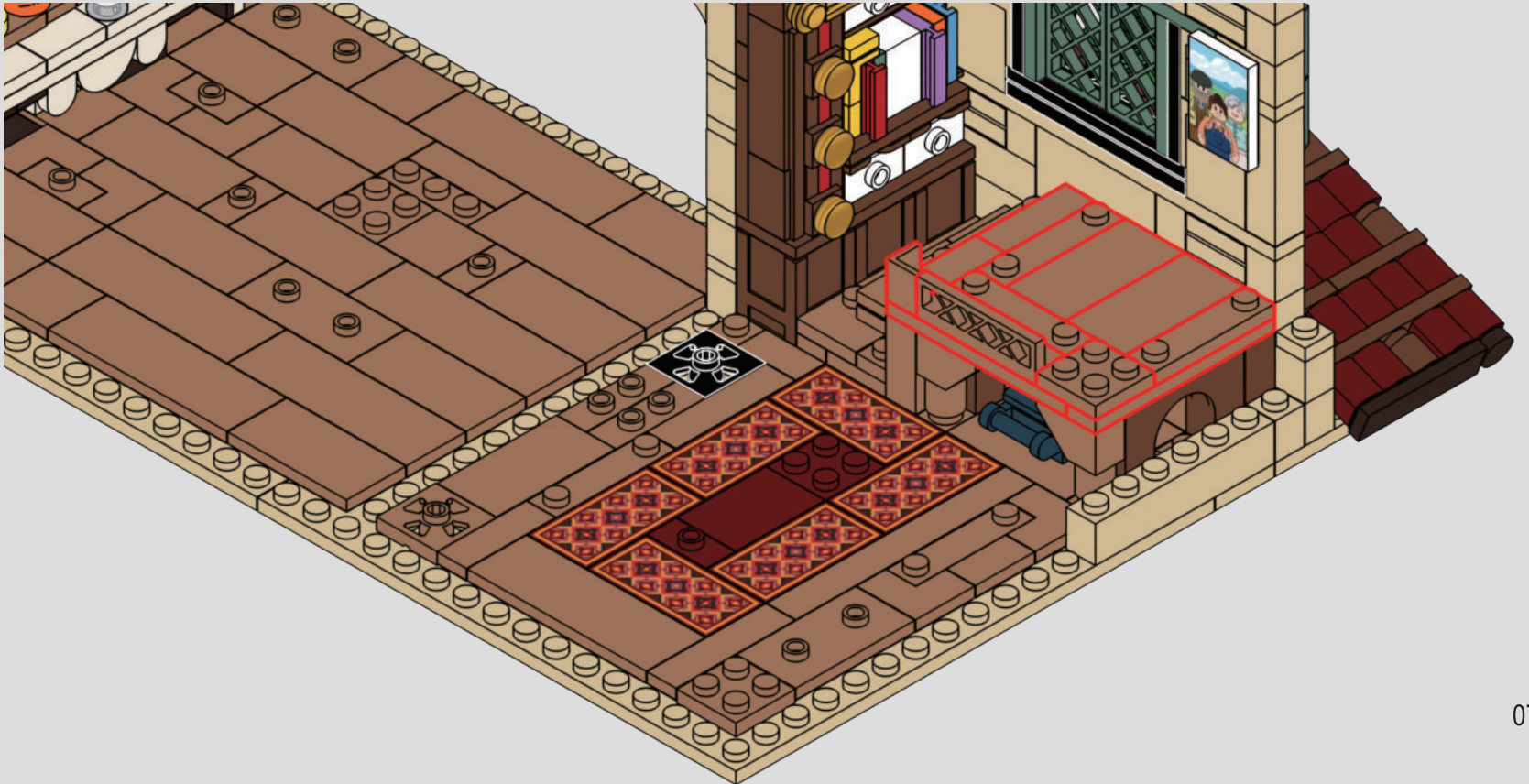

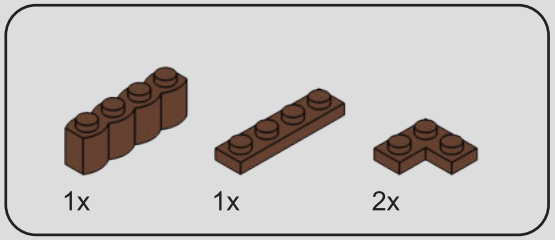

135

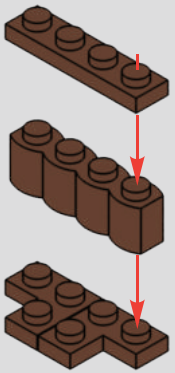

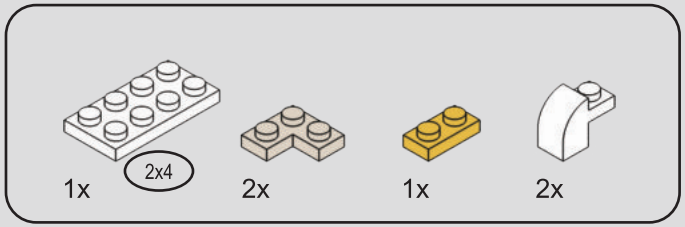

136

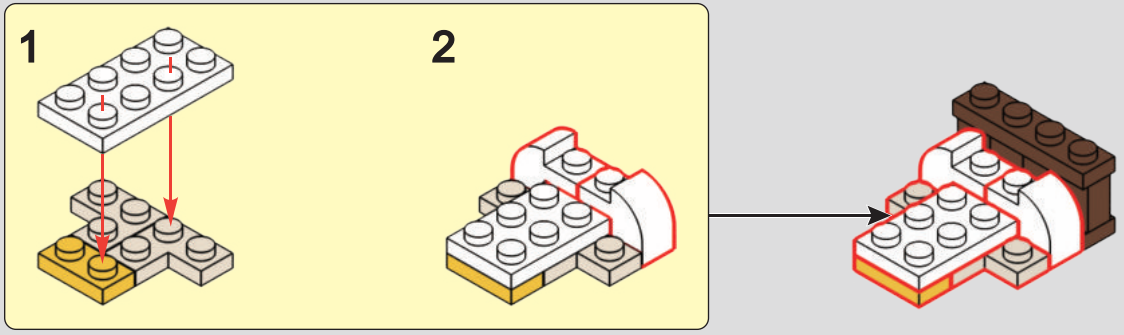

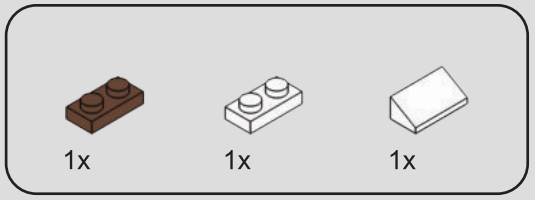

137

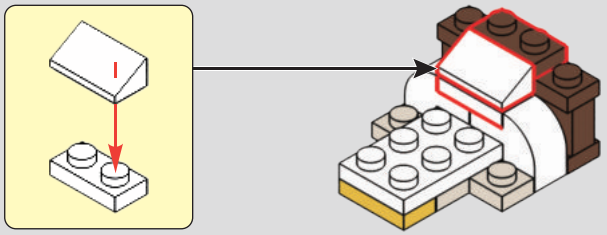

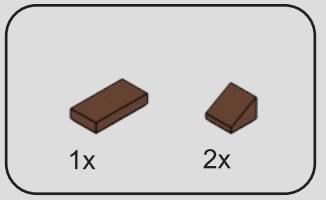

138

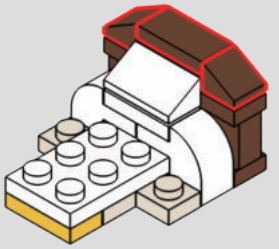

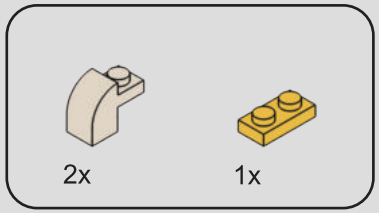

139

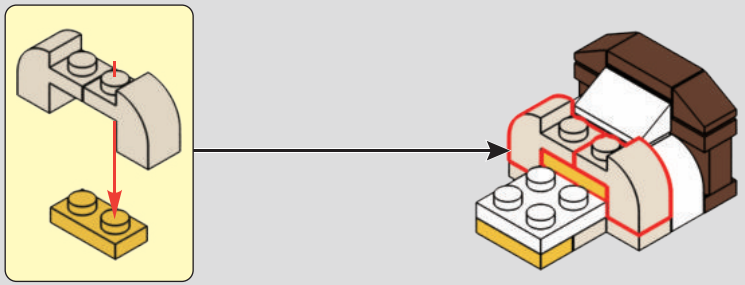

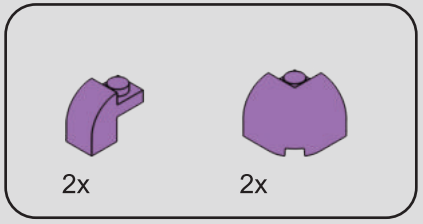

140

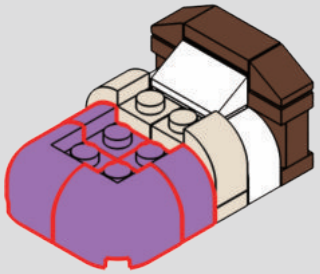

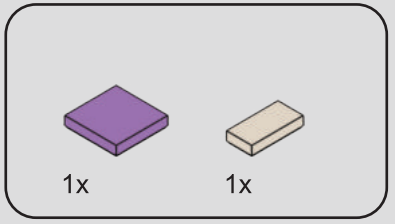

141

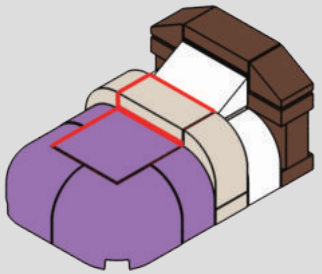



142

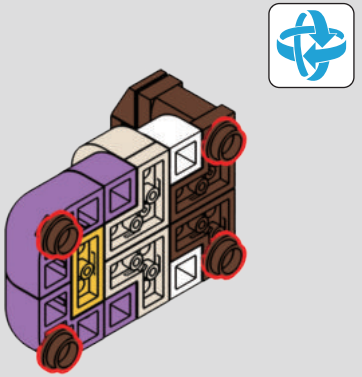

143



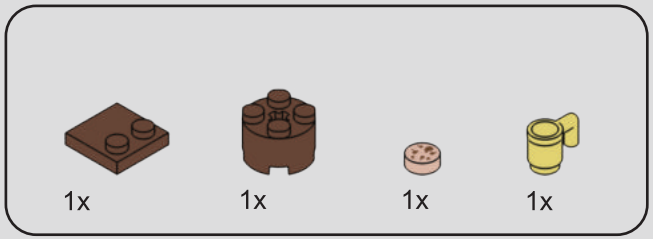

144


8
F

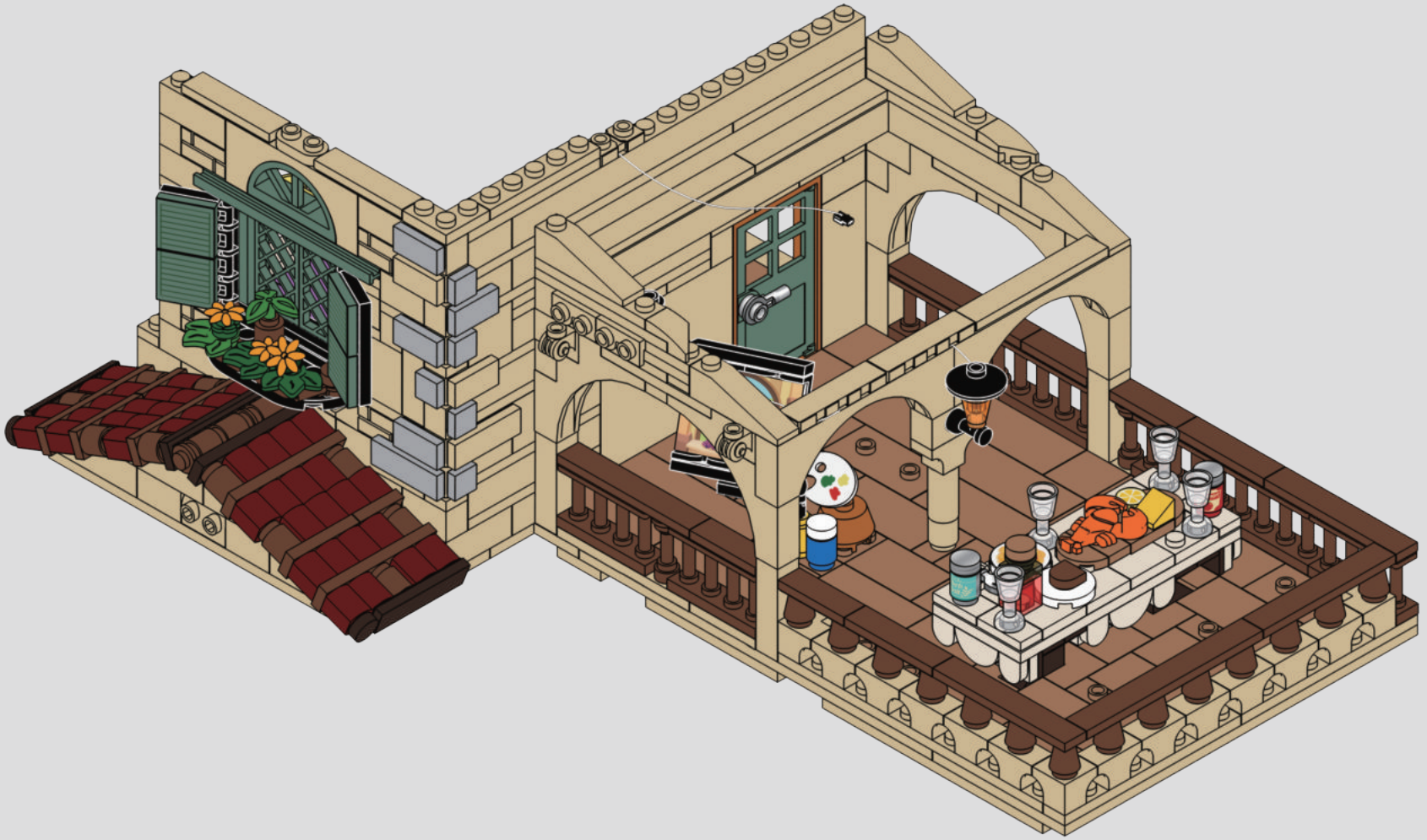

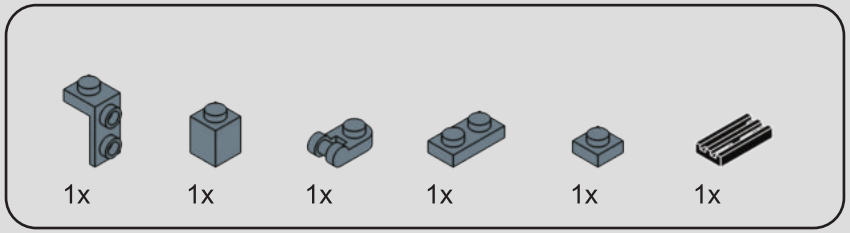

145

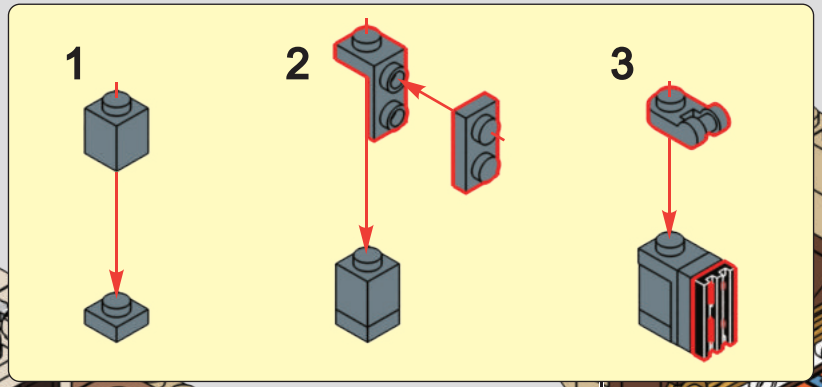

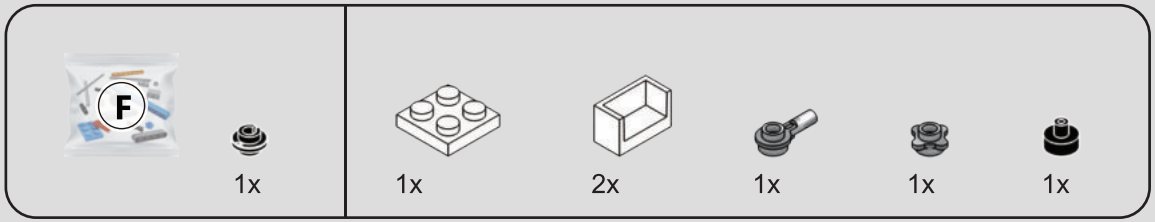

146

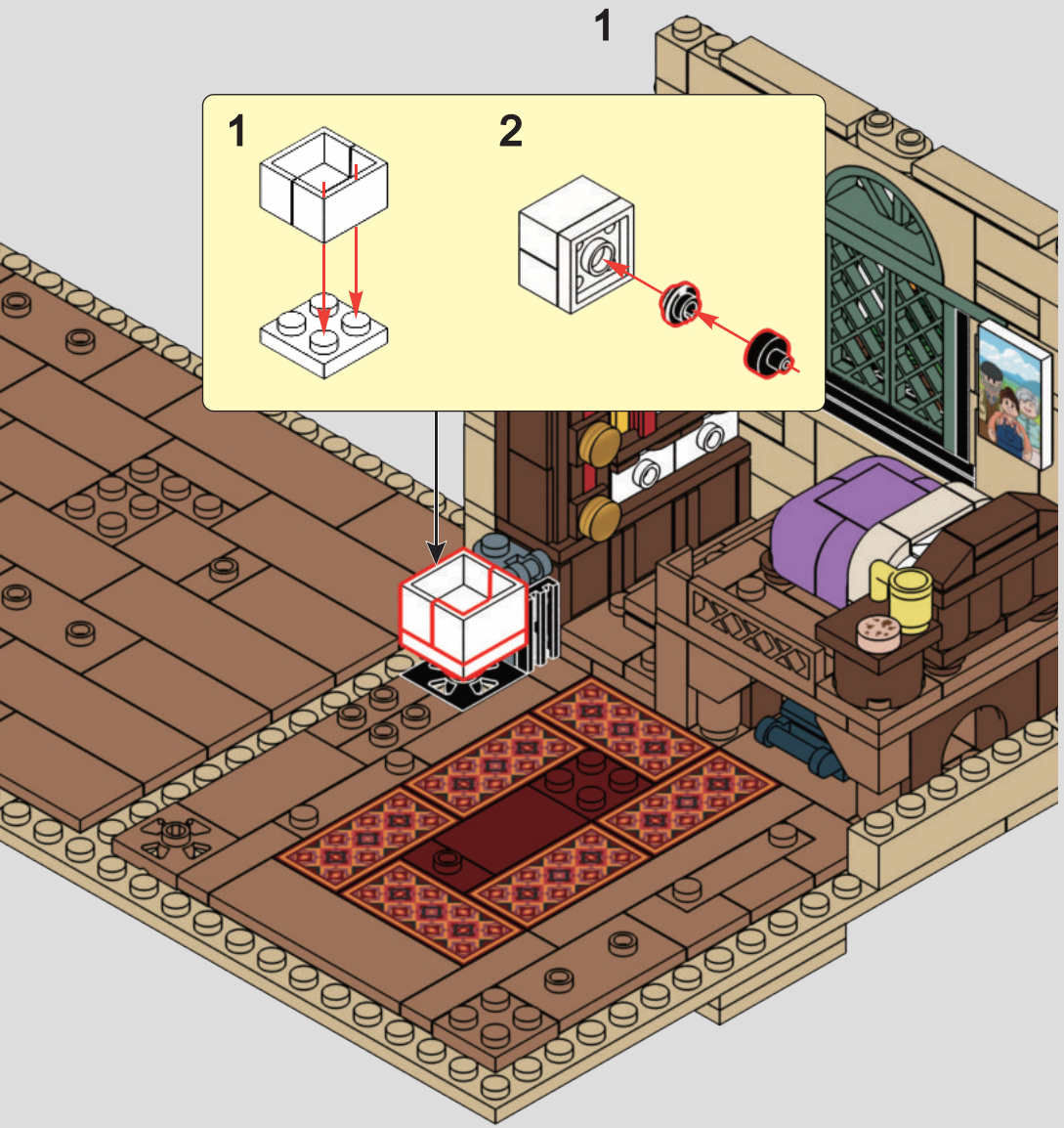



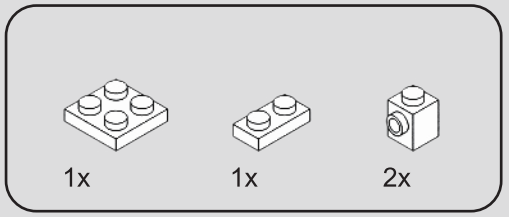

147

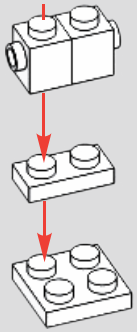

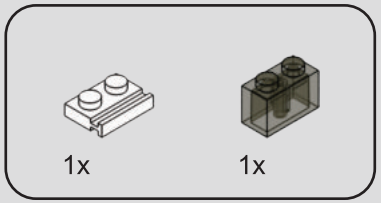

148



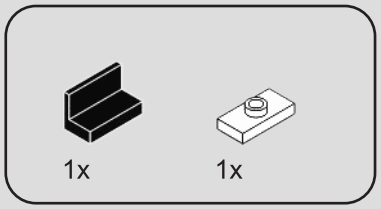

149

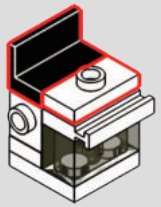

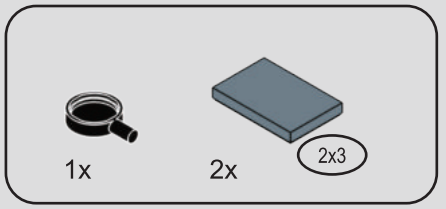

150

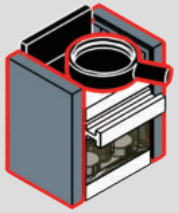

151



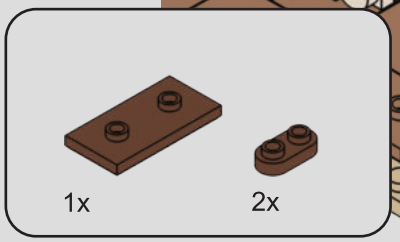

152

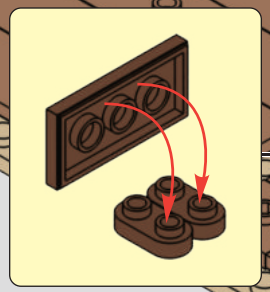



153



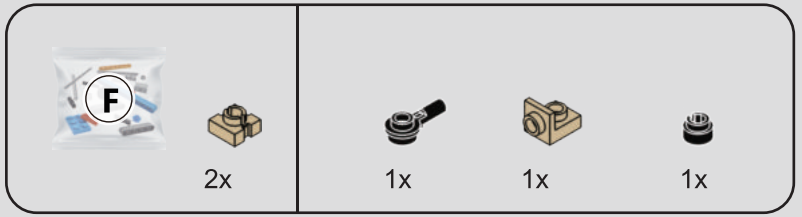

154

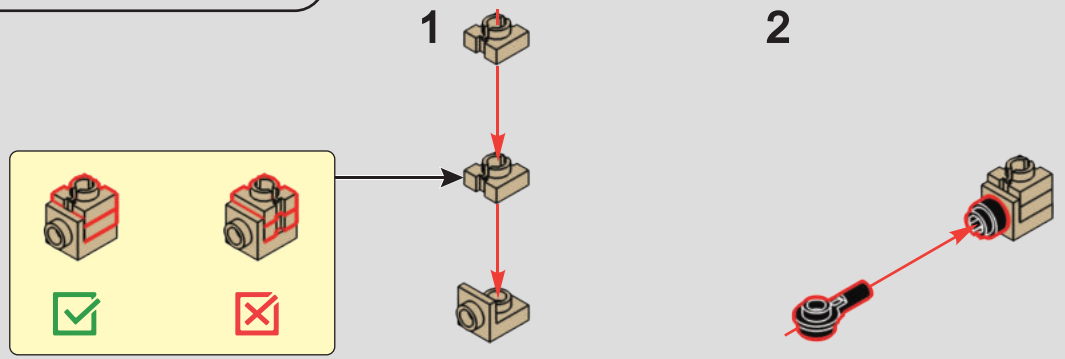

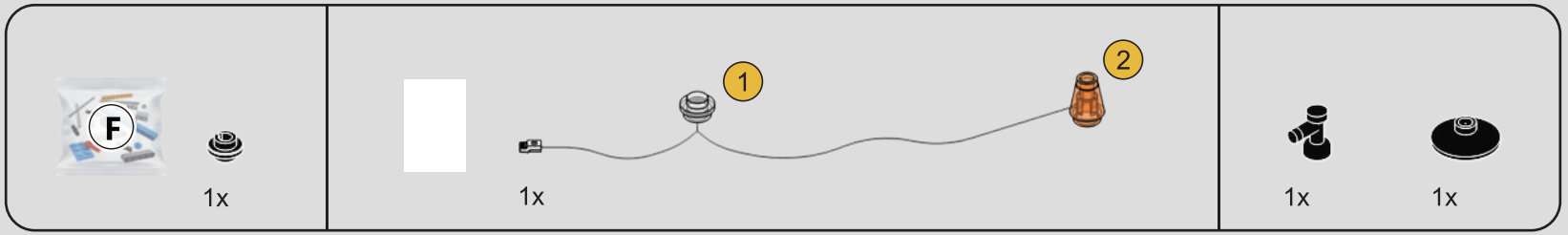

155

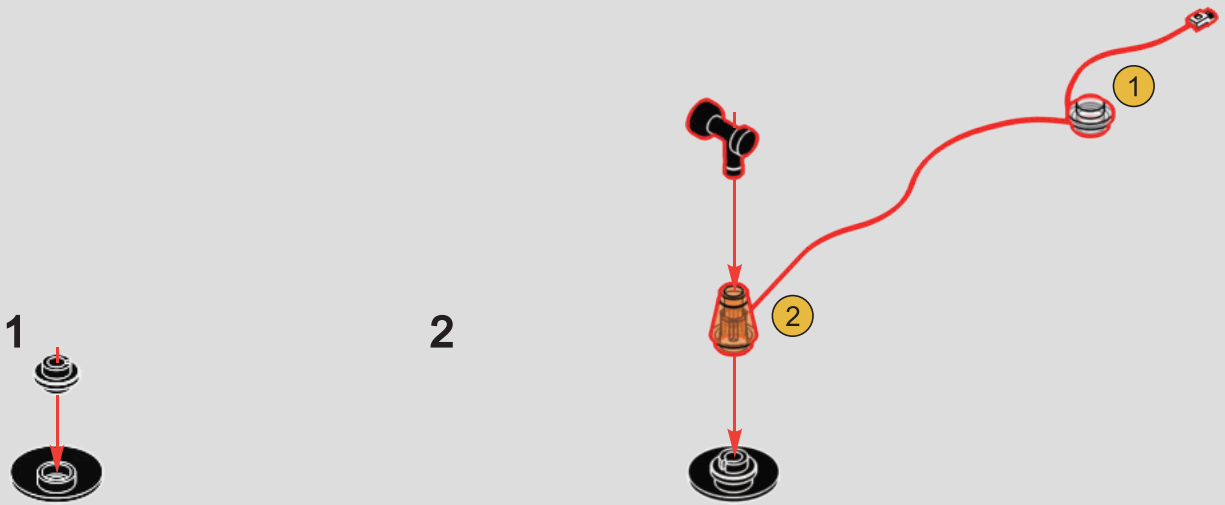

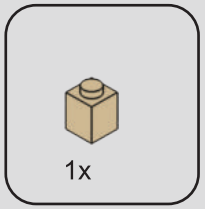

156

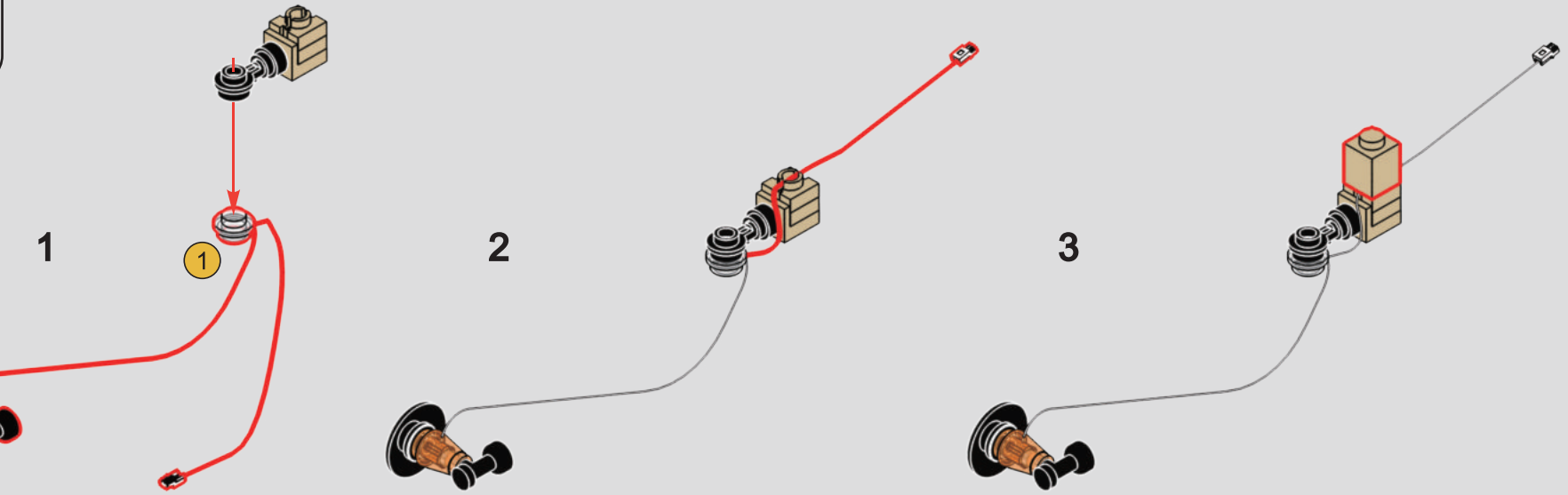

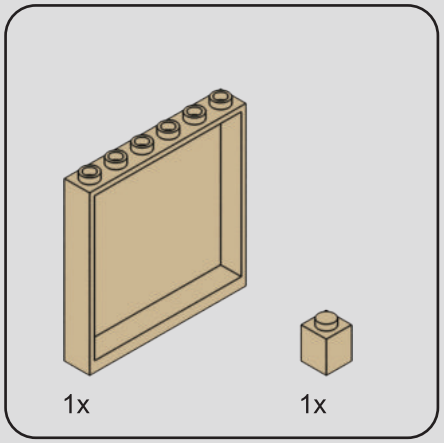

157

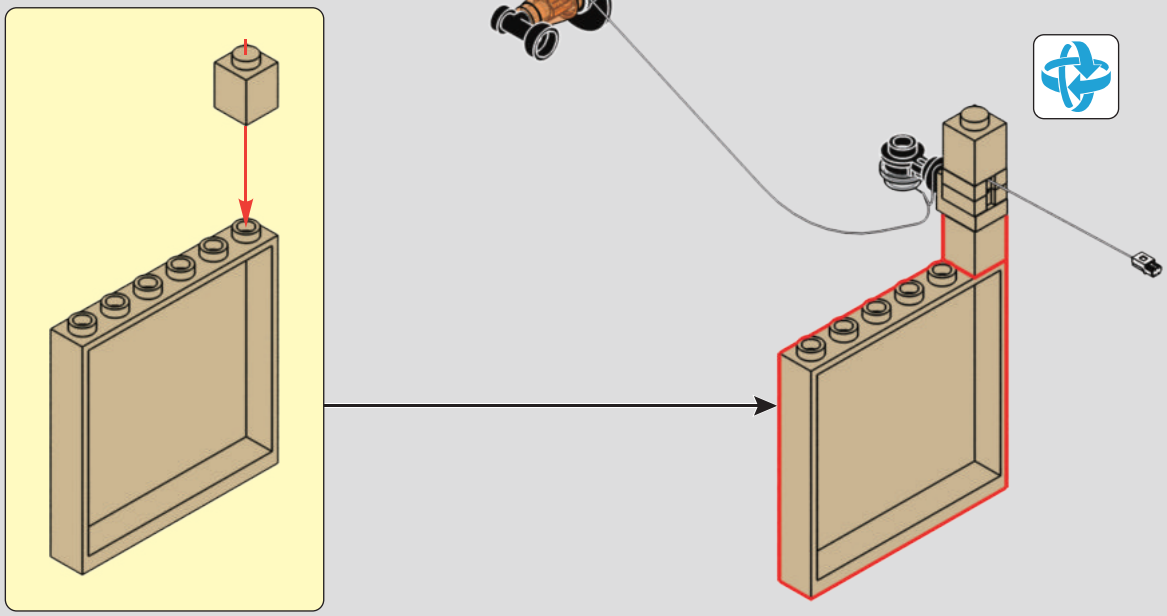

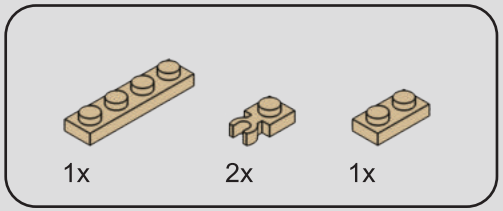

158

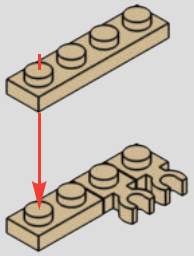

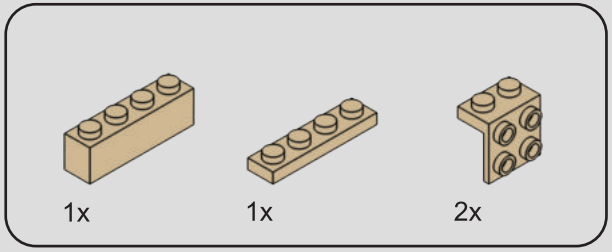

159

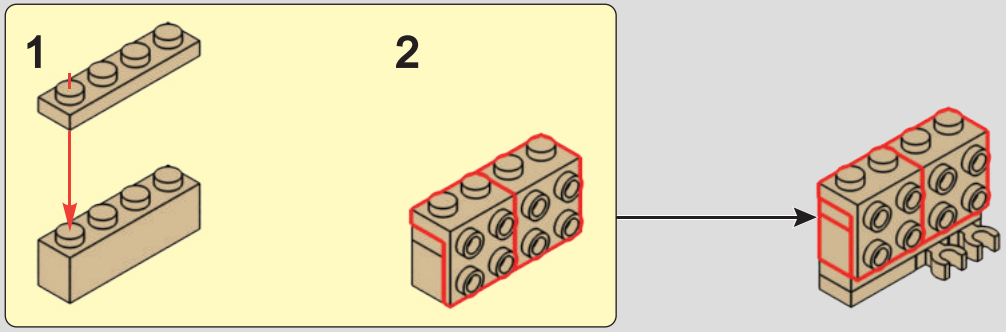

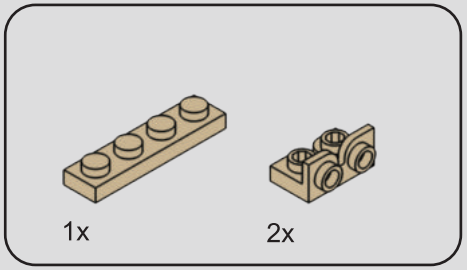

160

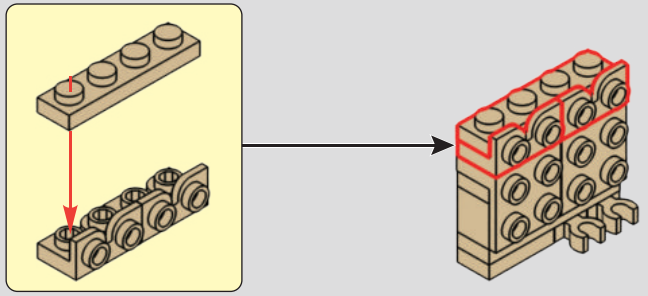

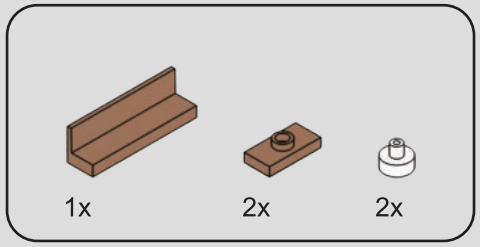

161

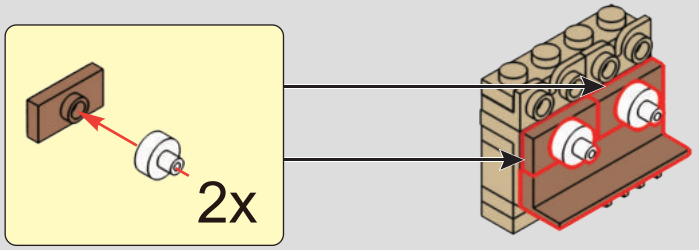

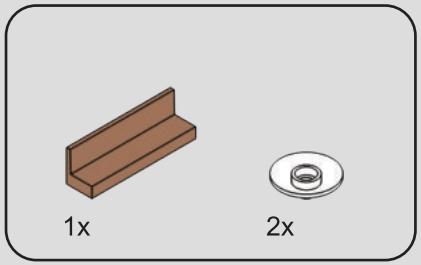

162

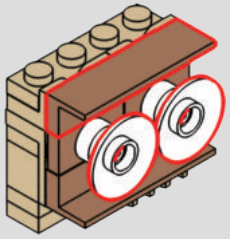

163

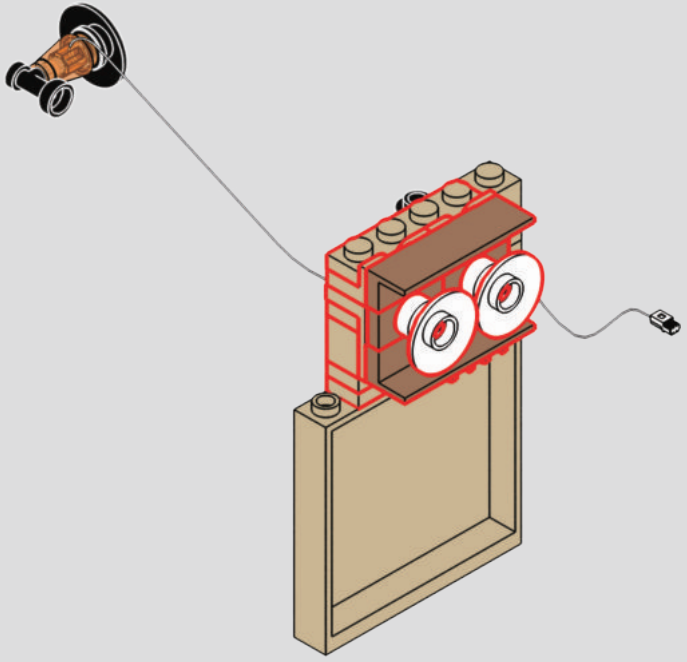

2x

164

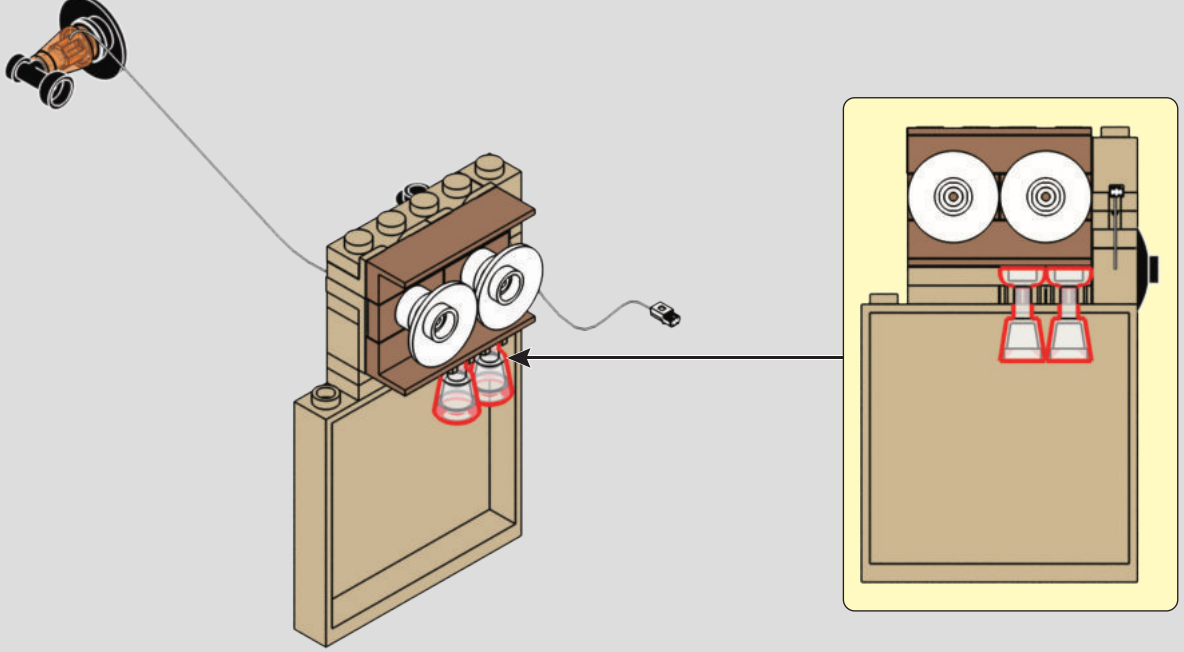

165

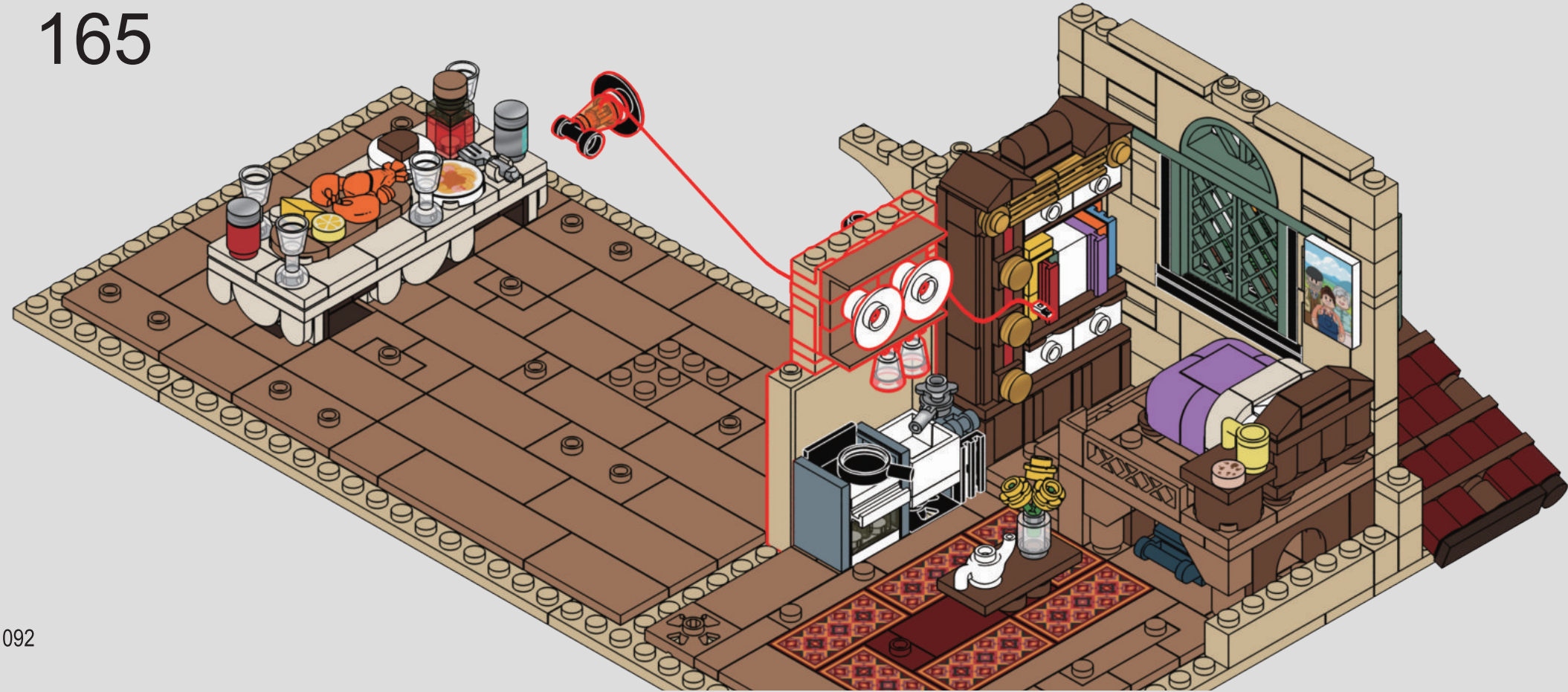

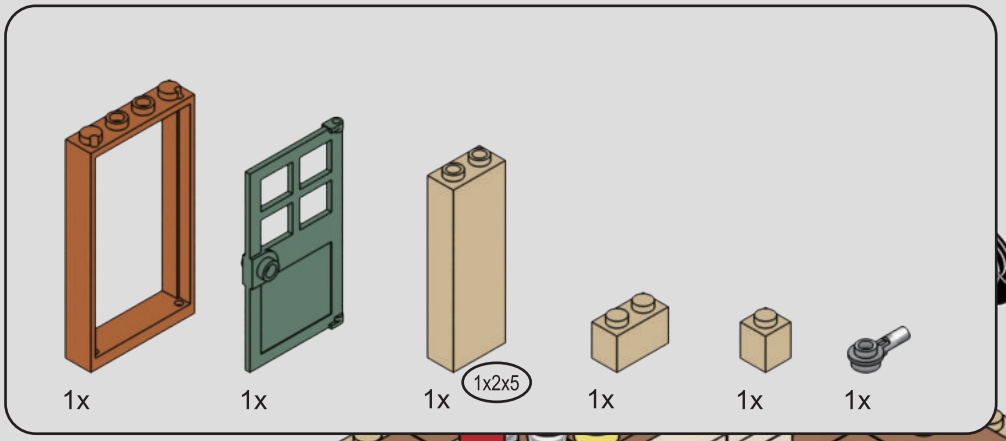

166

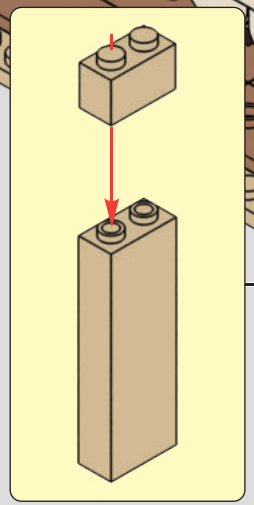

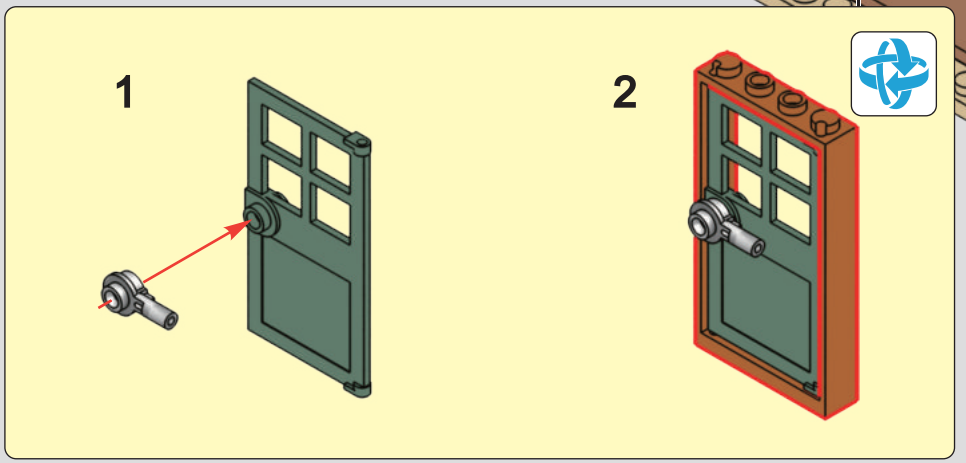

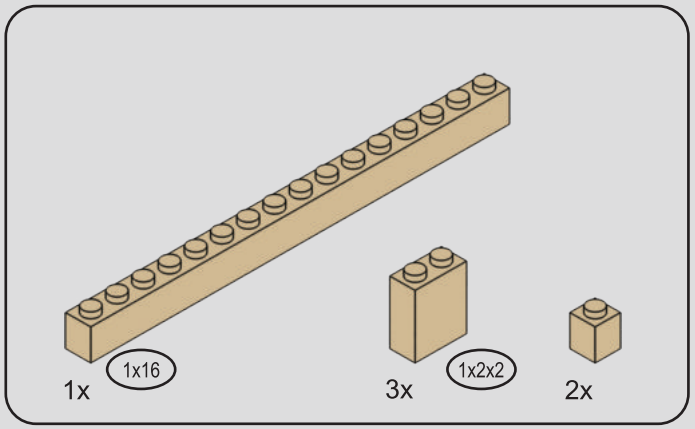

167

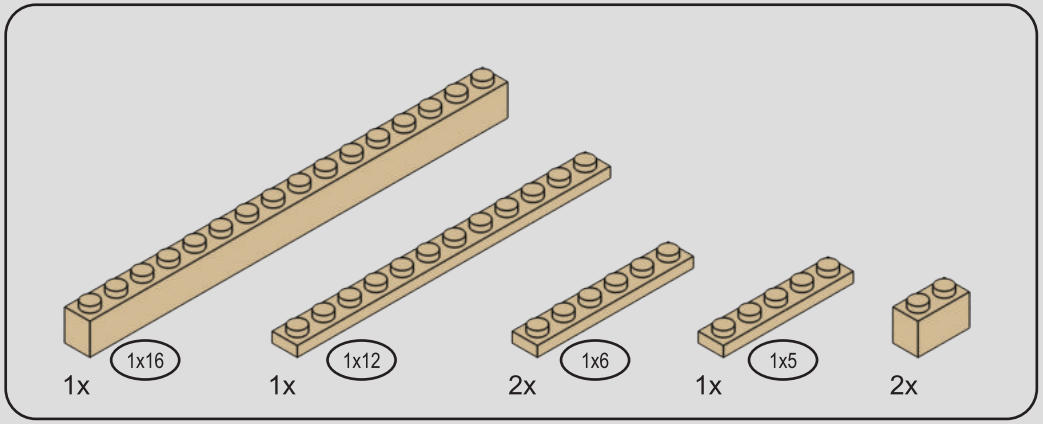

168

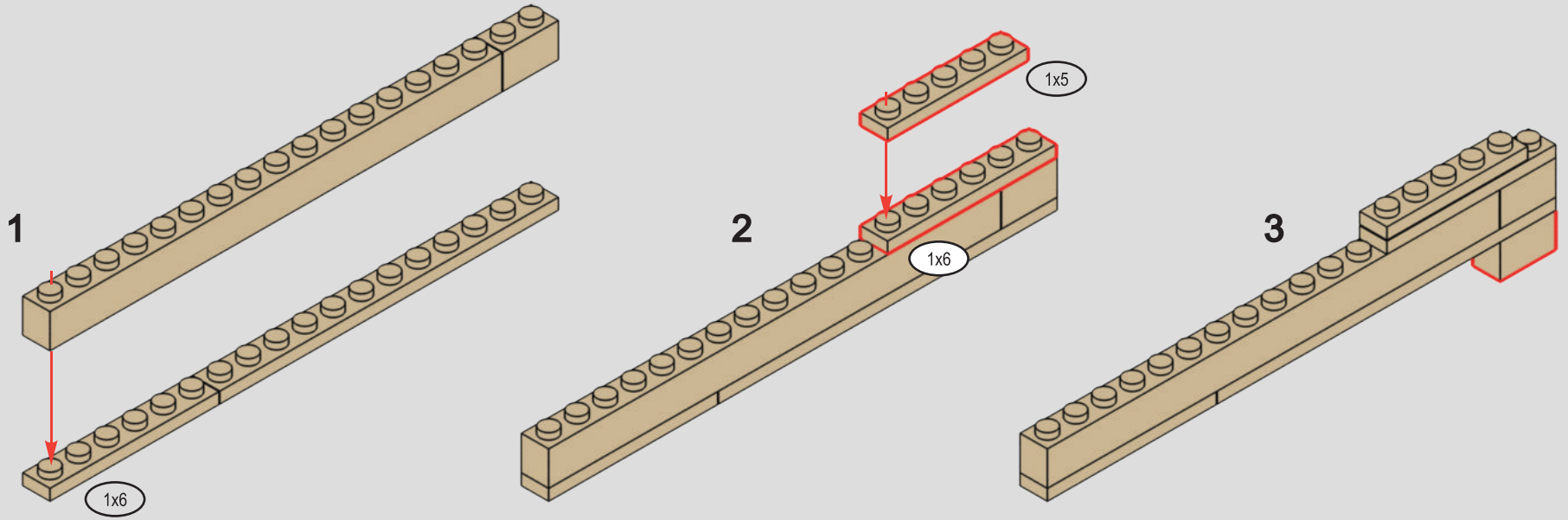

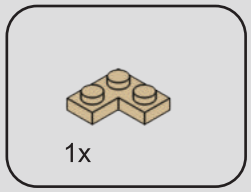

169



1x

170

1

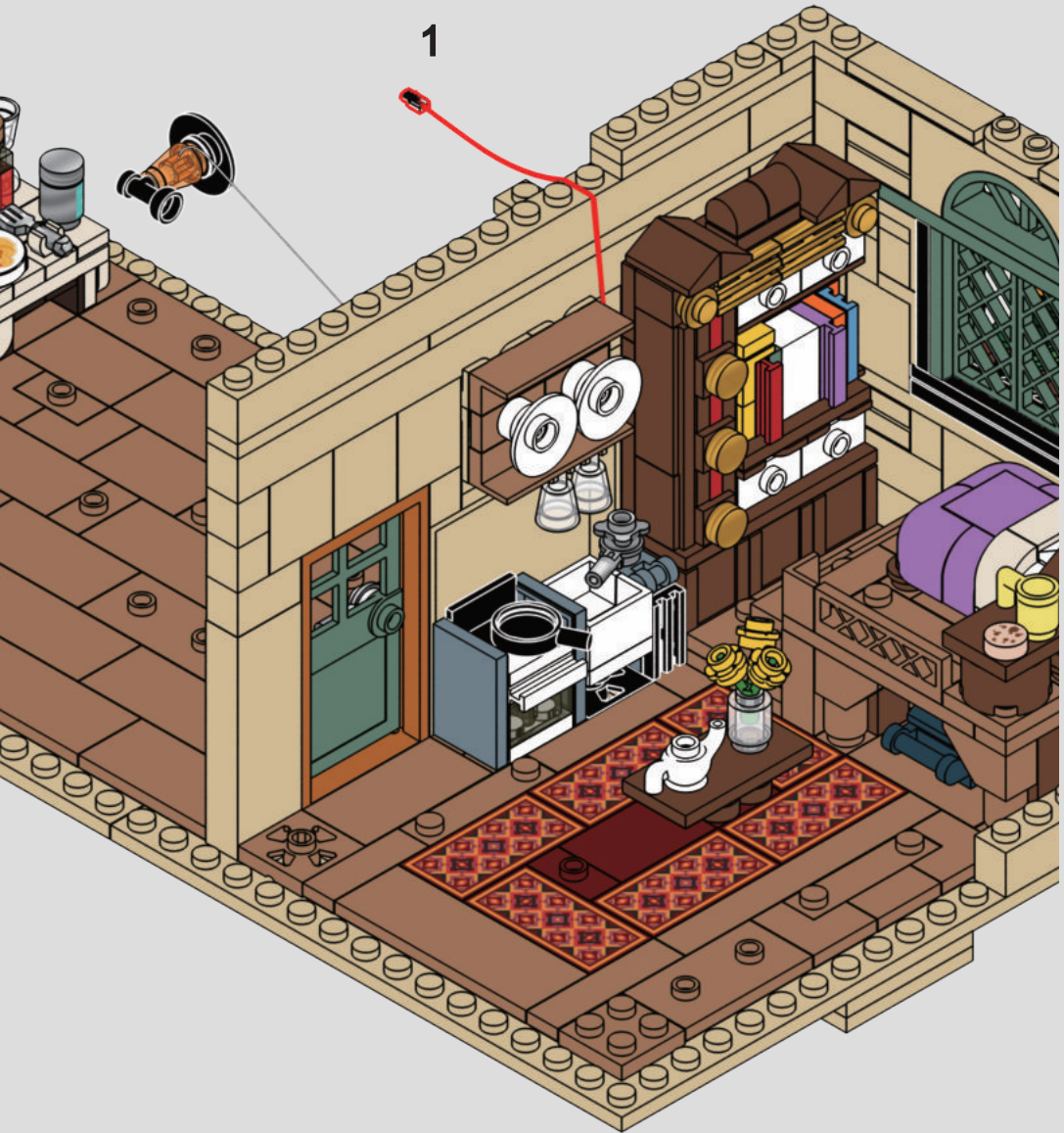

2



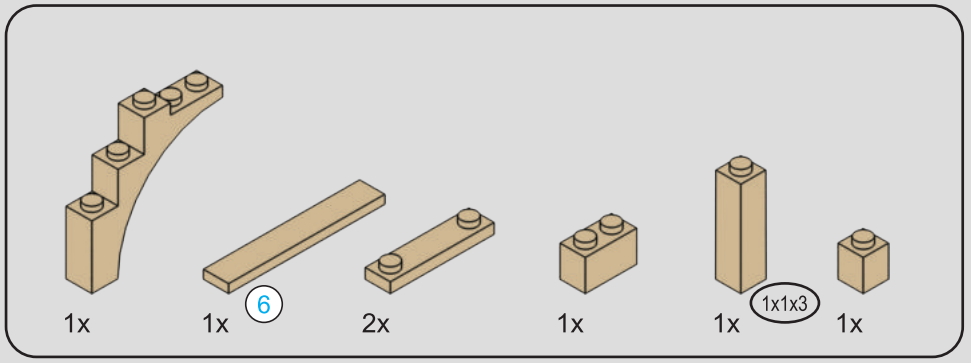



171



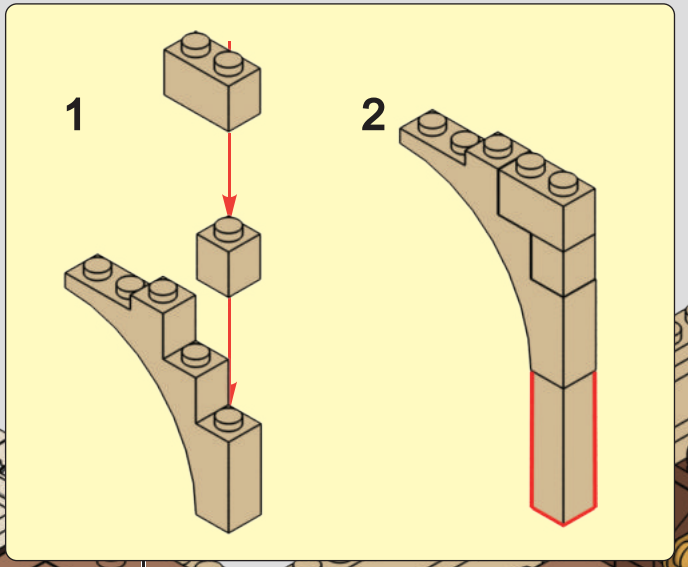

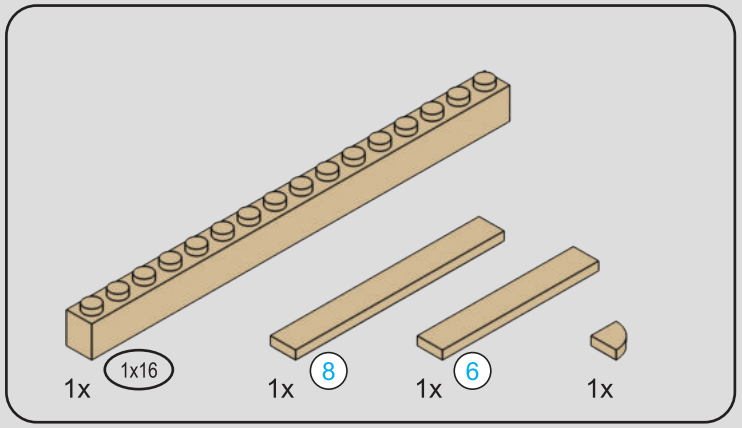

172



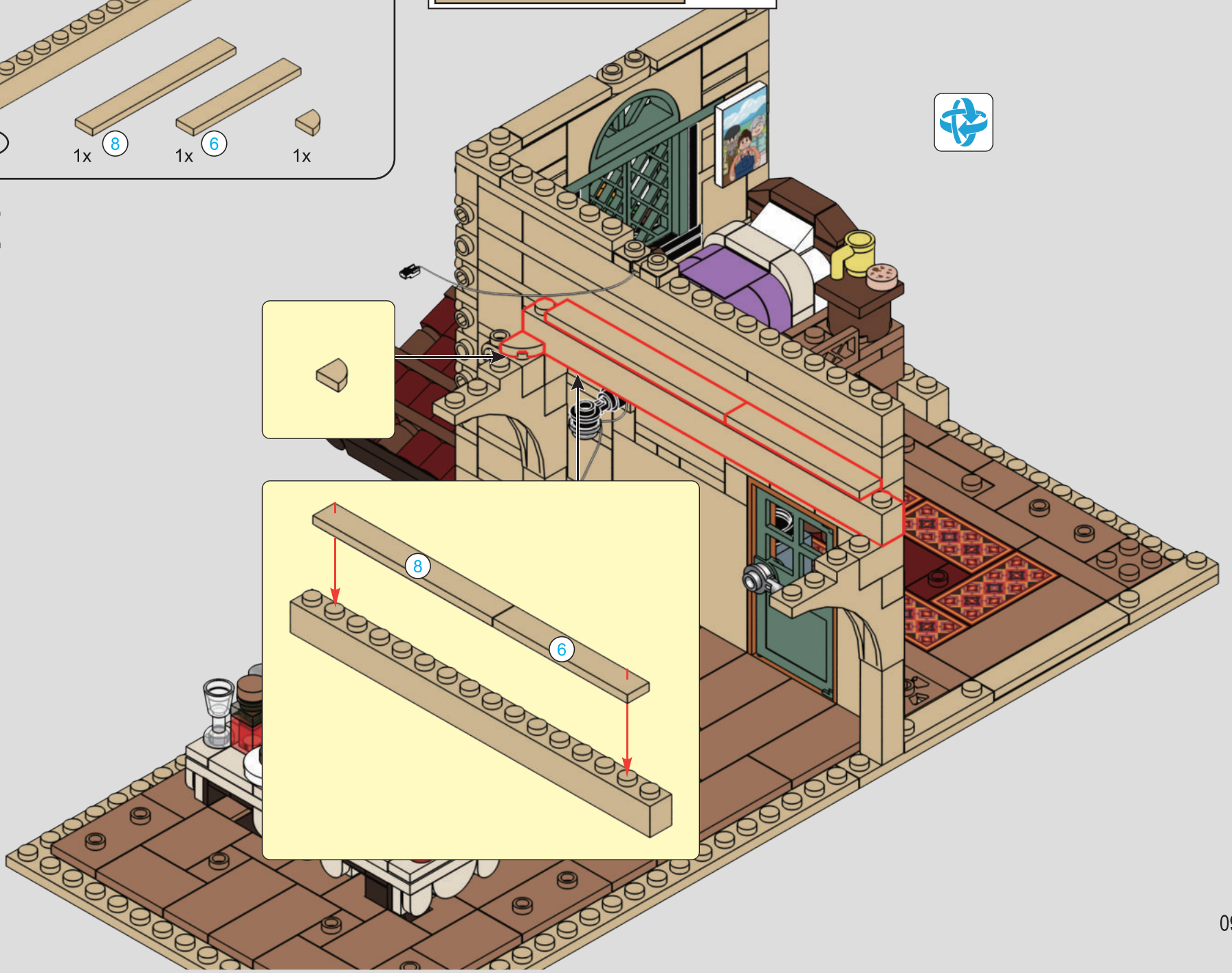

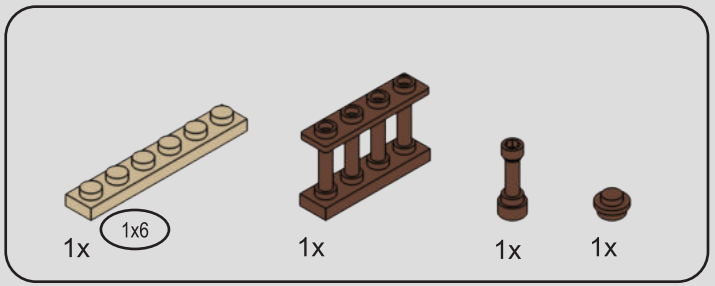

173

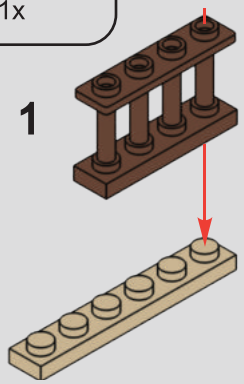

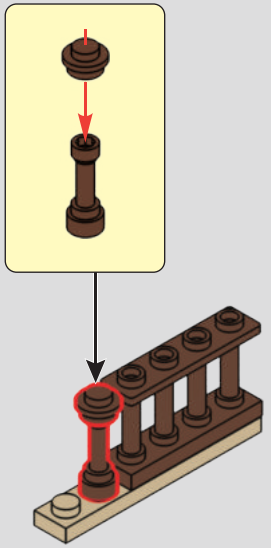

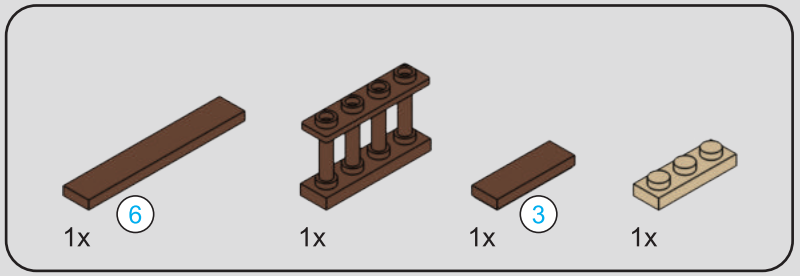



174

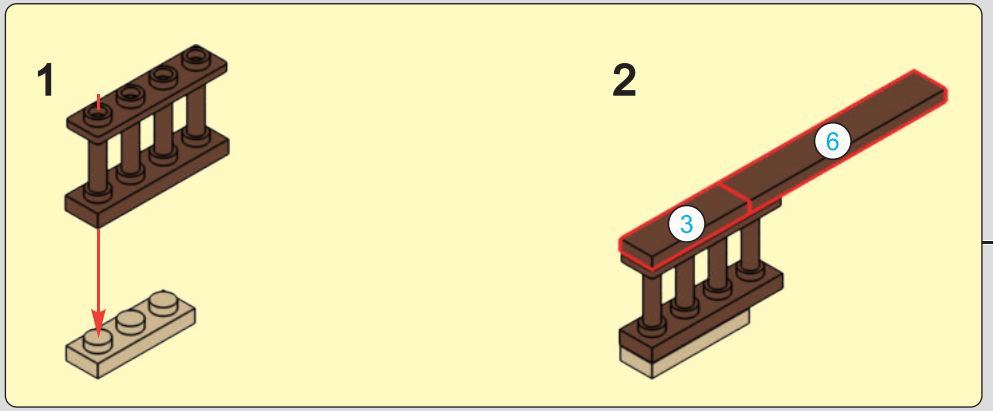

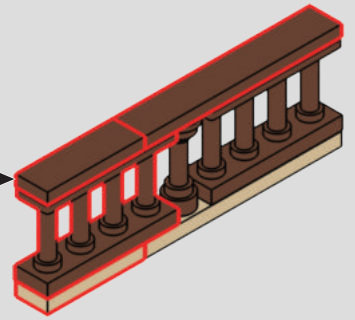

175



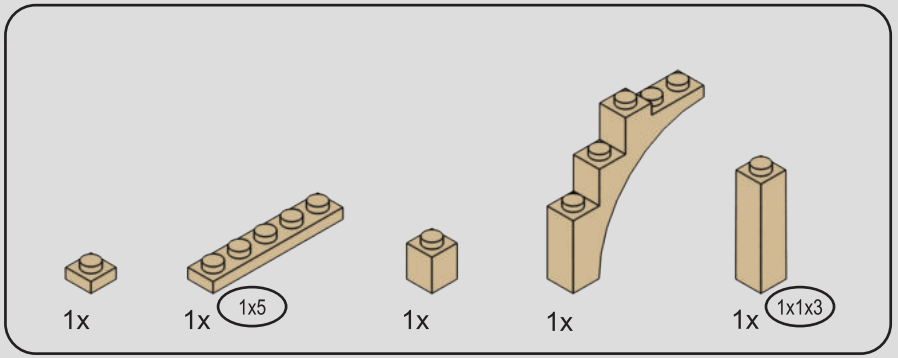

176

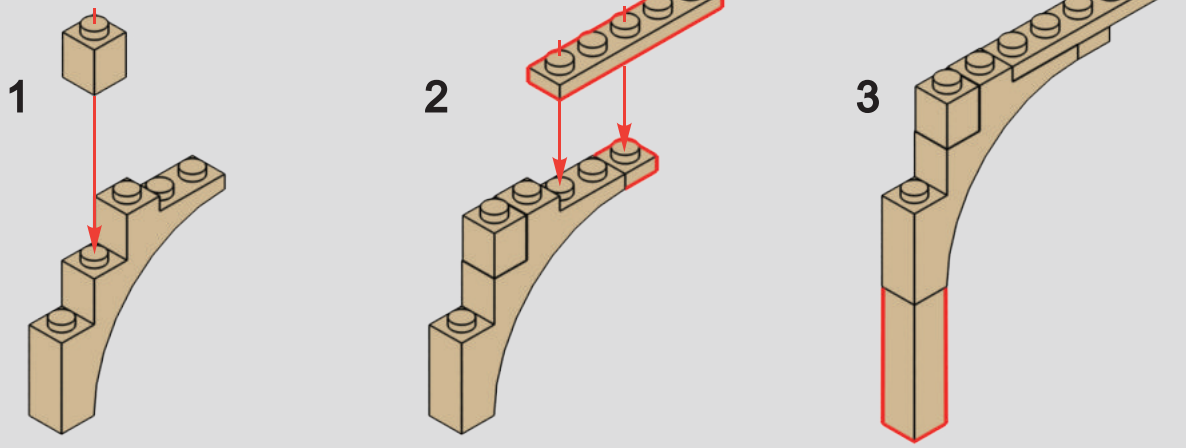

177



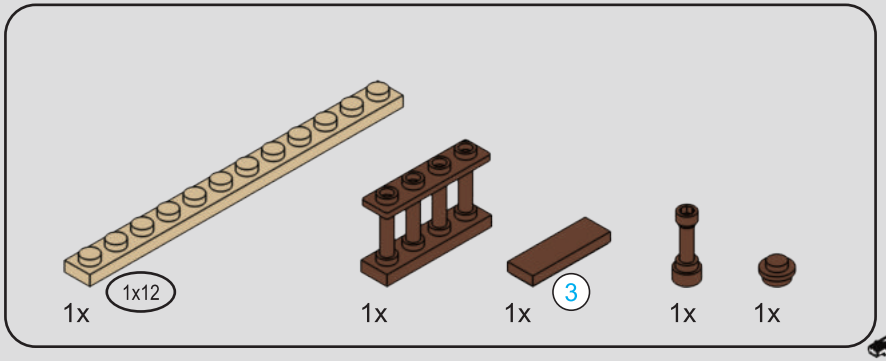

178

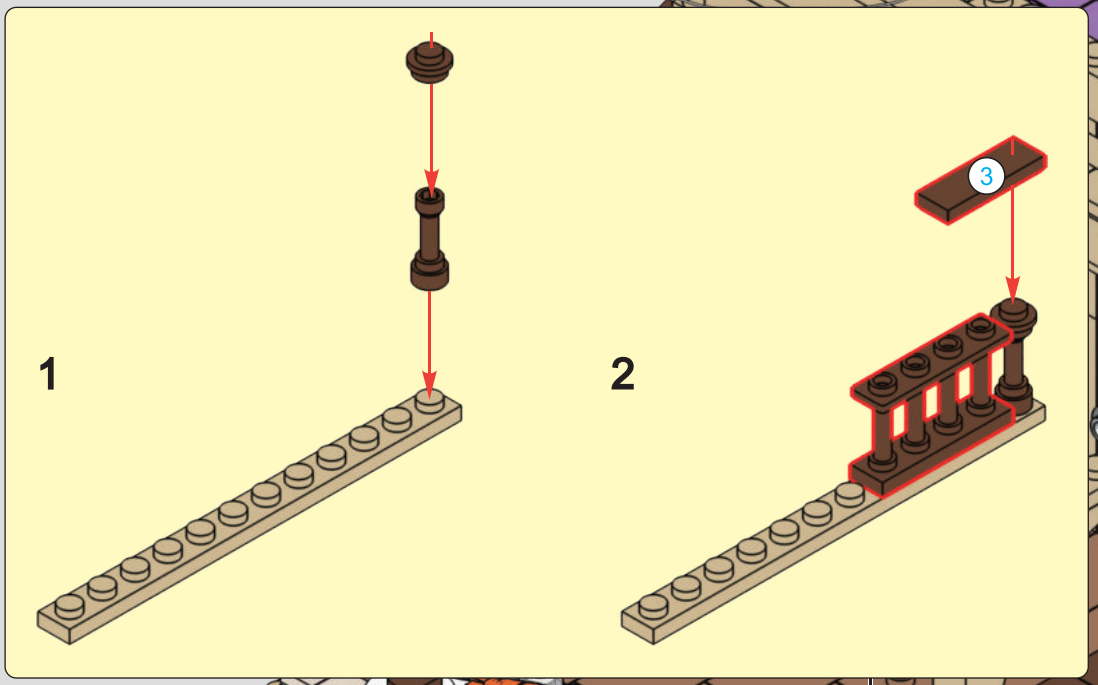

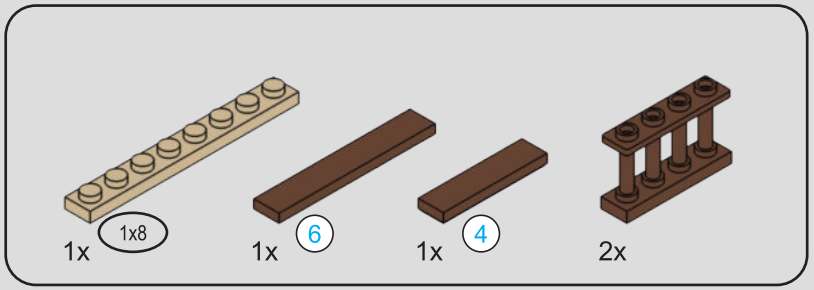

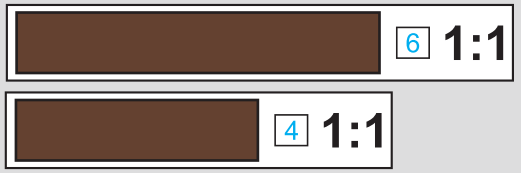

179

1



2

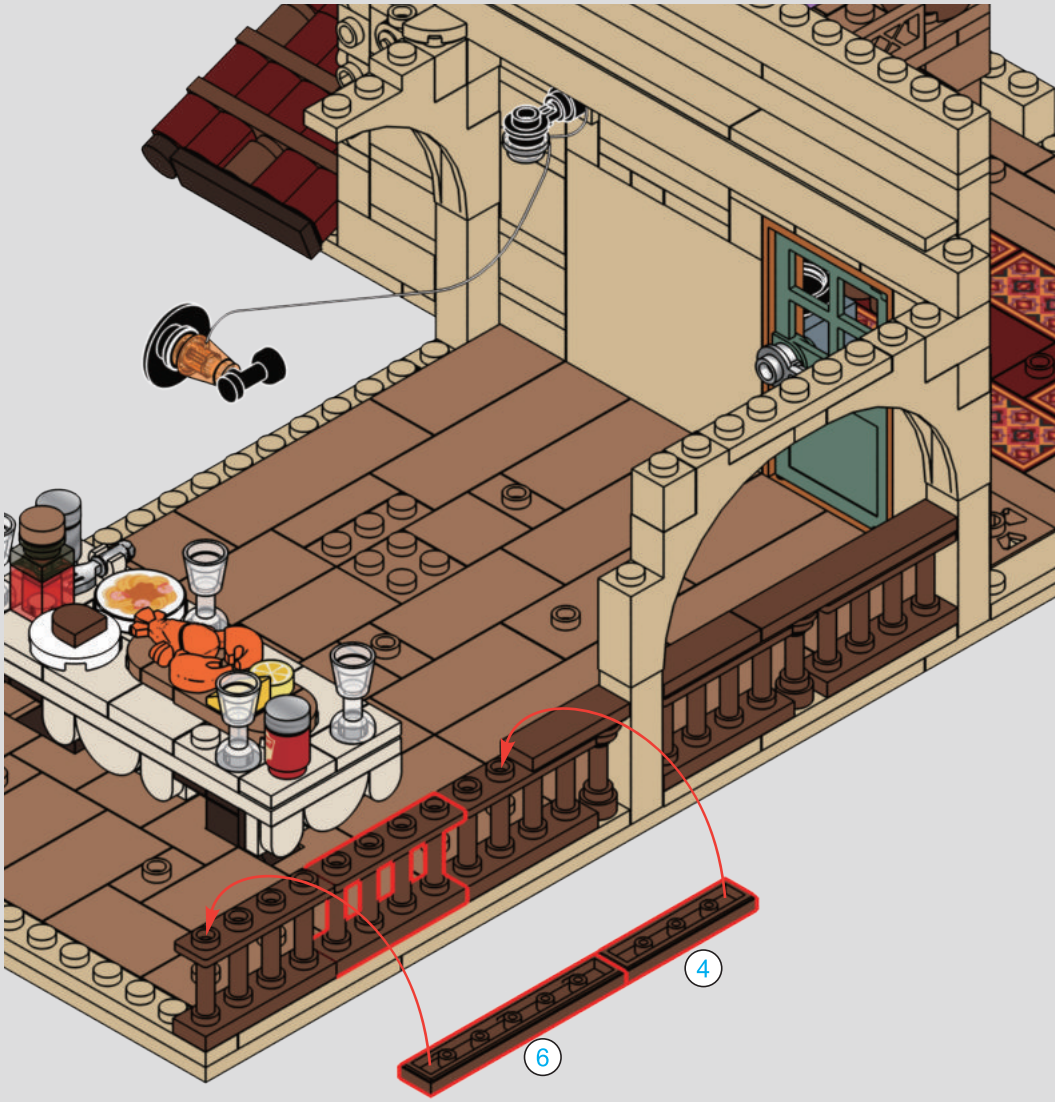

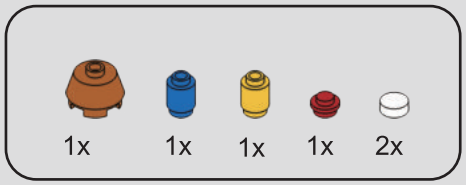

180





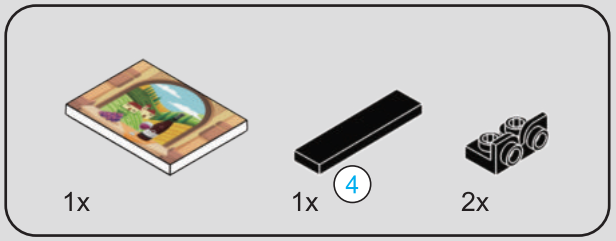

181



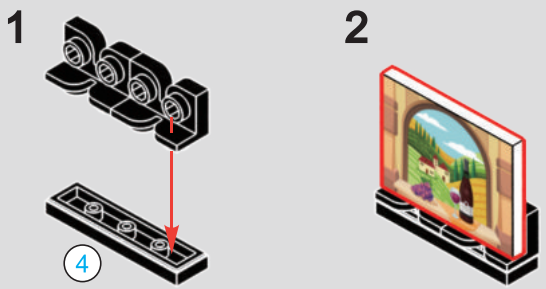

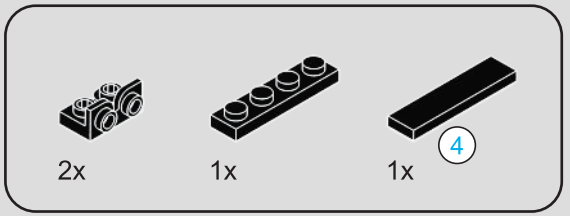

182



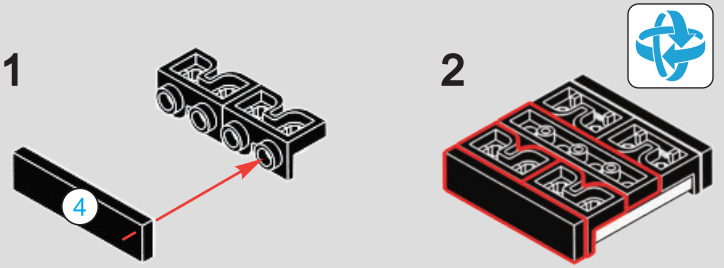

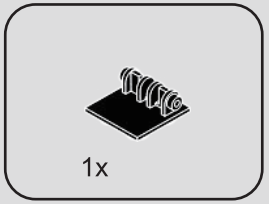

183

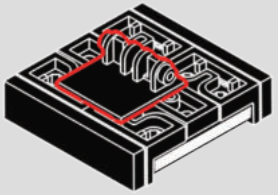

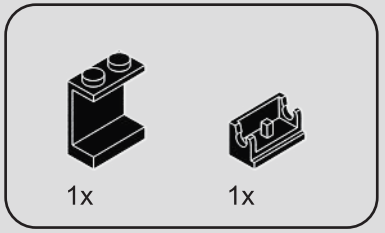

184

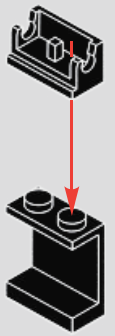

185

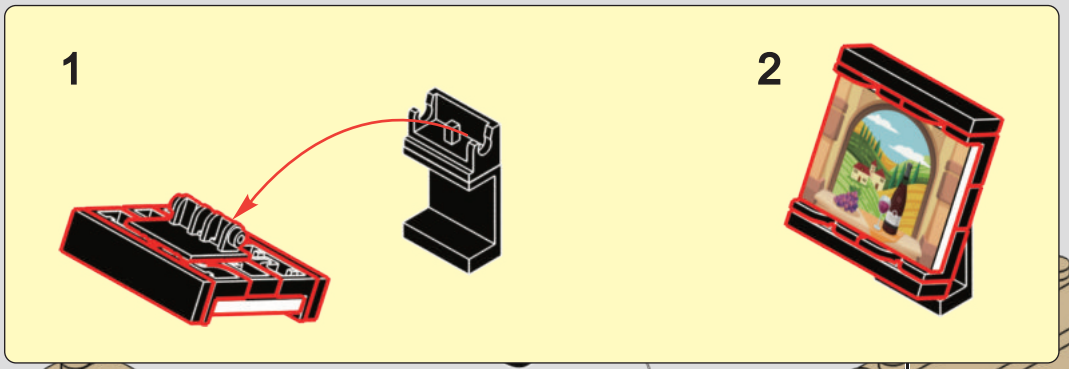





186

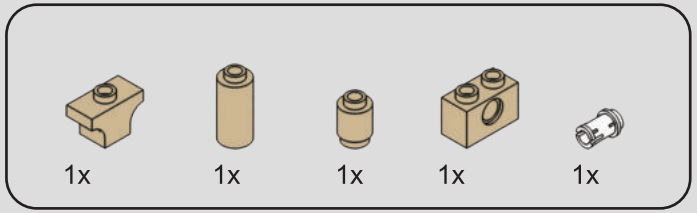

187

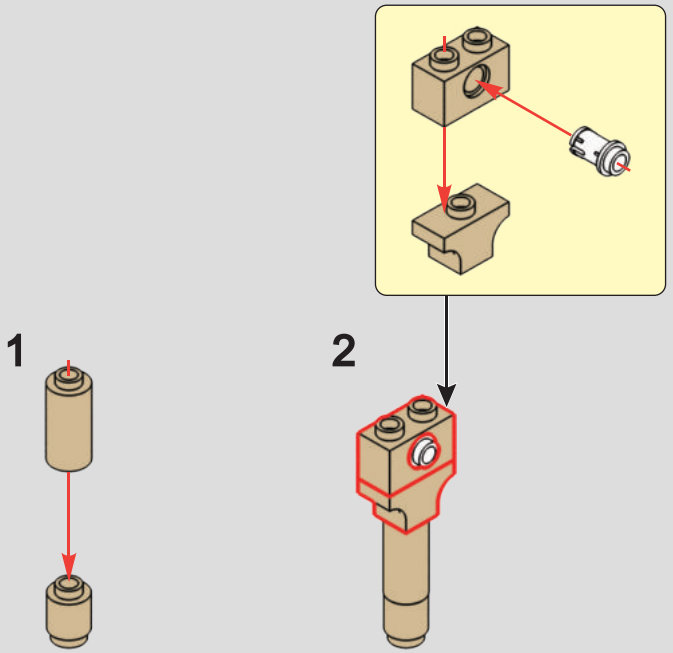

188



189



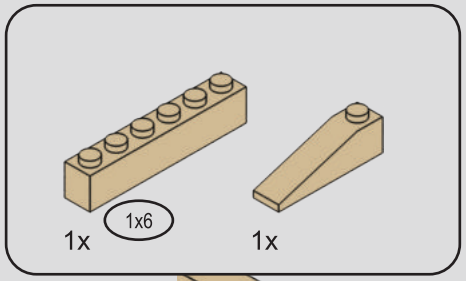

190



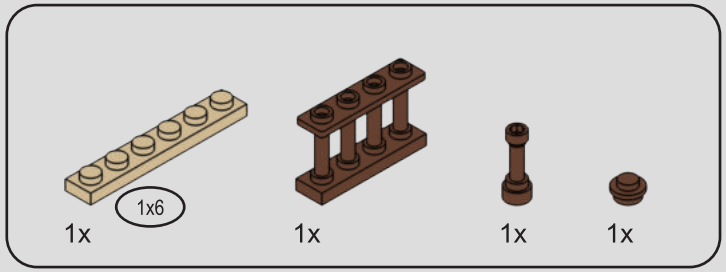

191

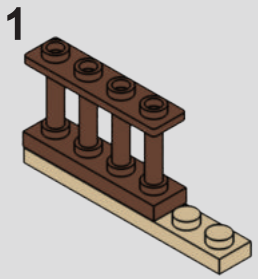

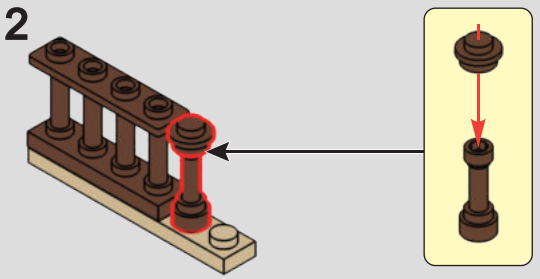

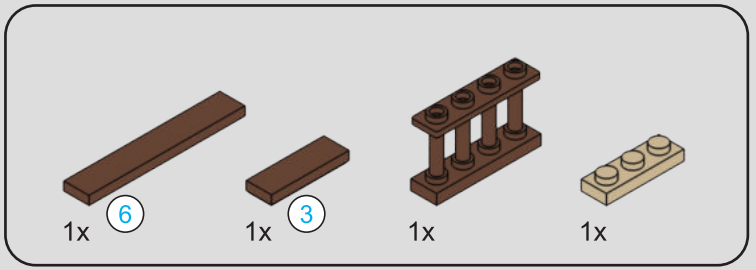



192

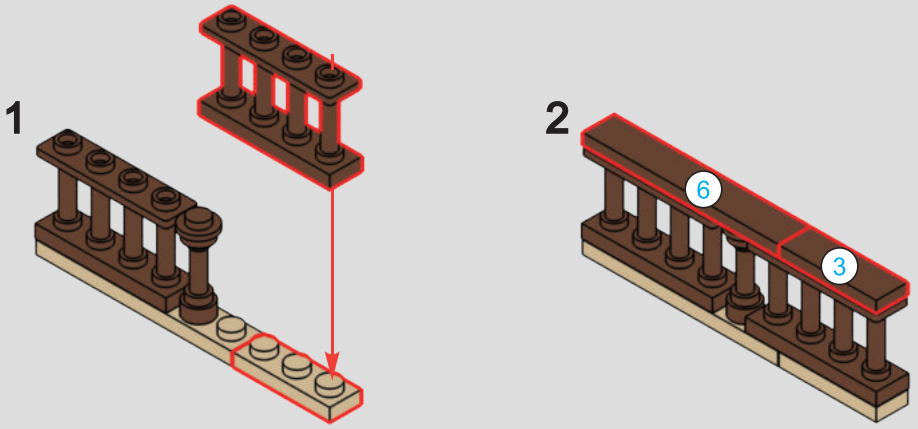

193





194

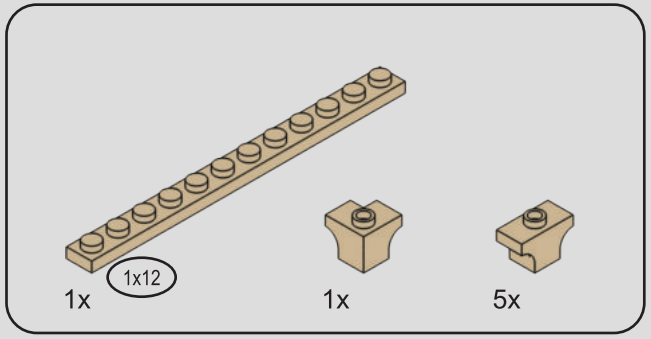

195

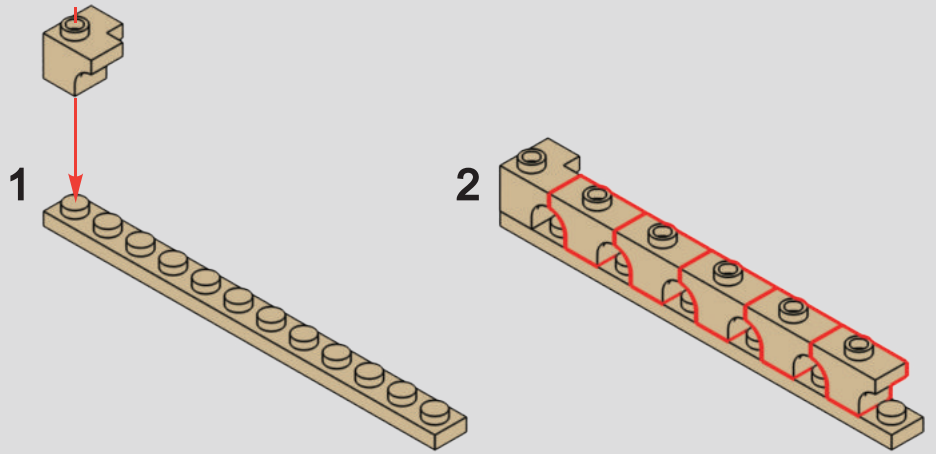

196

197

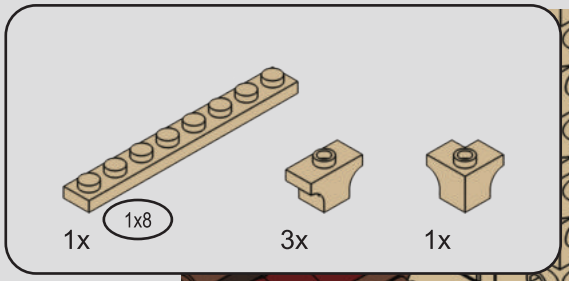

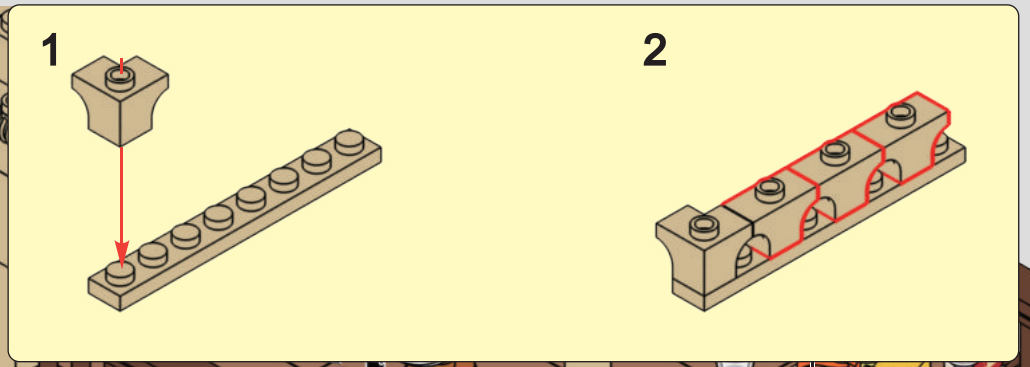

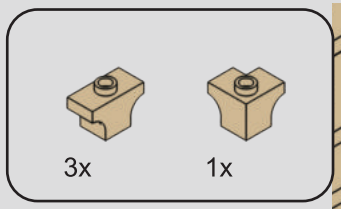

198





199



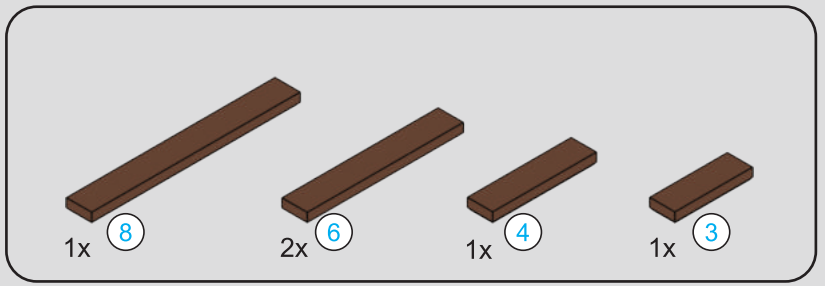



200



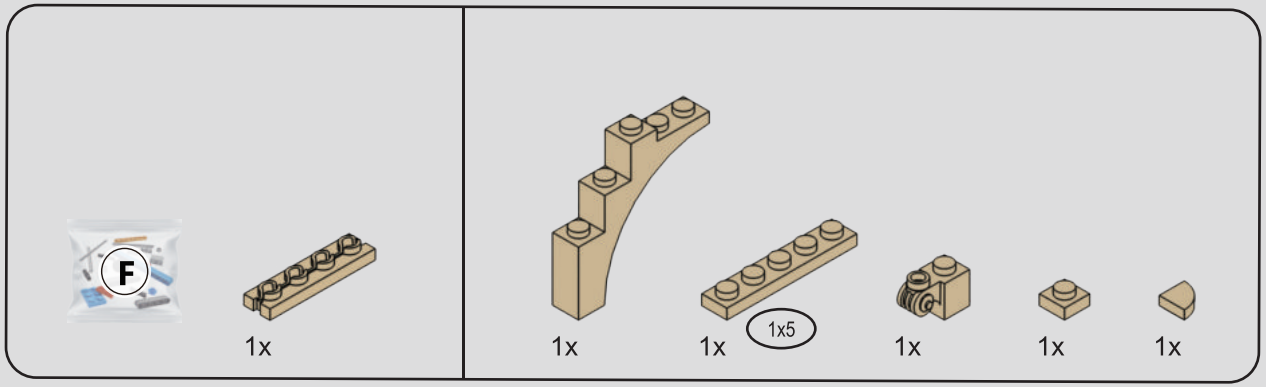

201

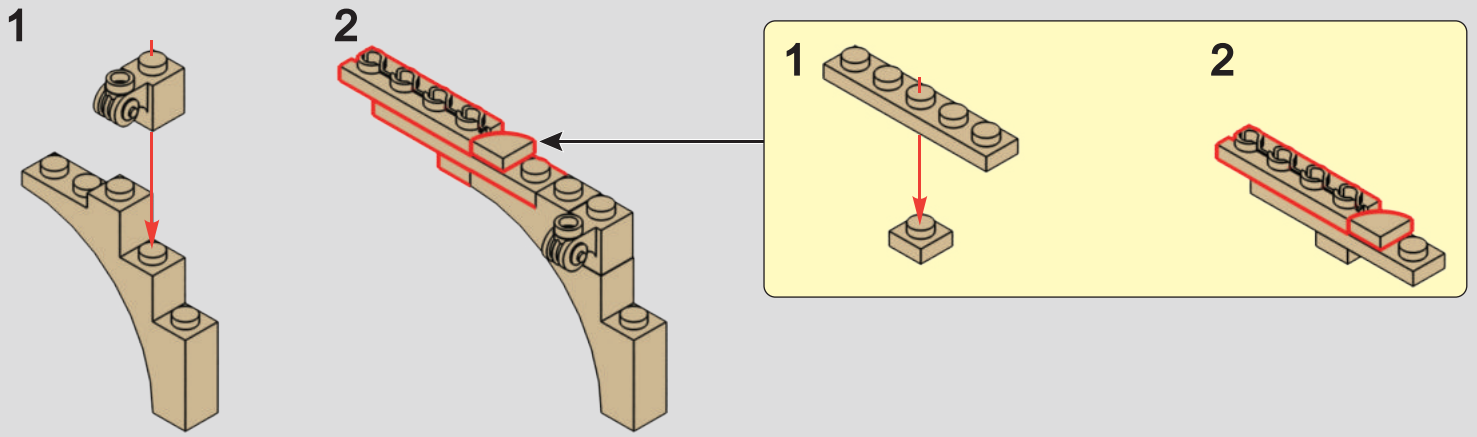

202

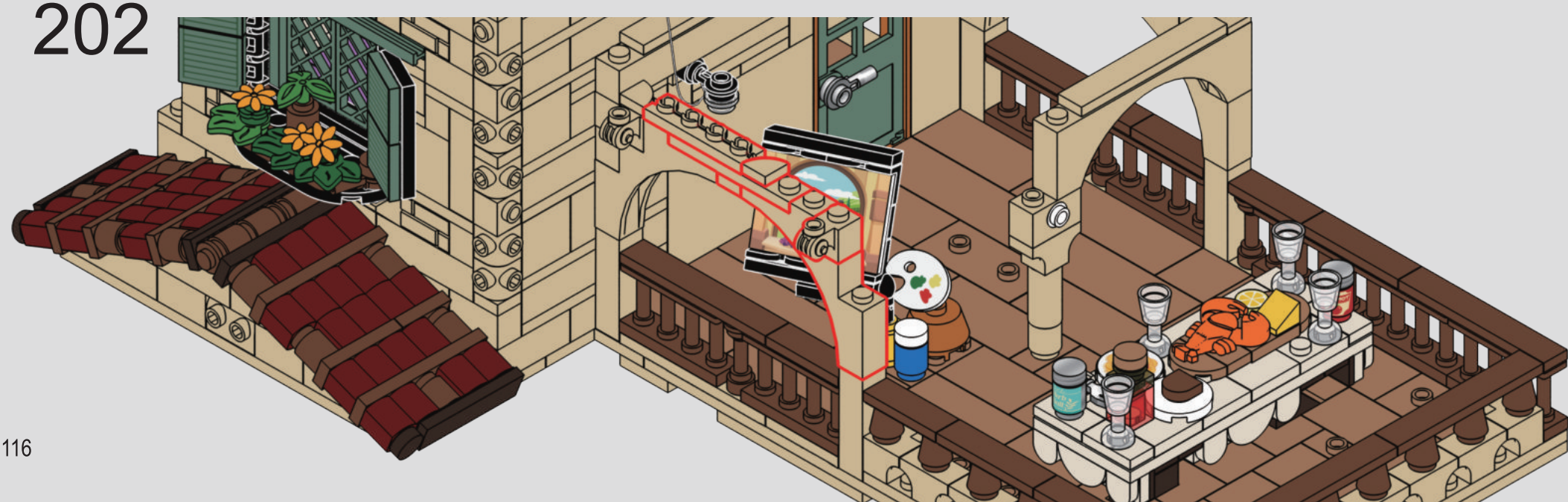

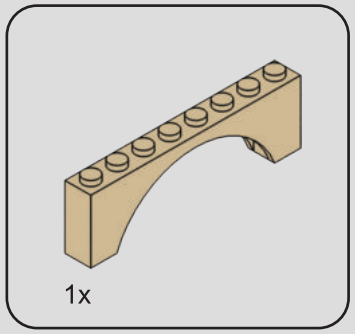

203

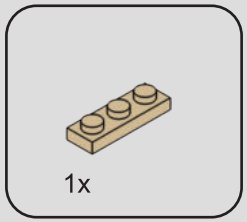

204

1

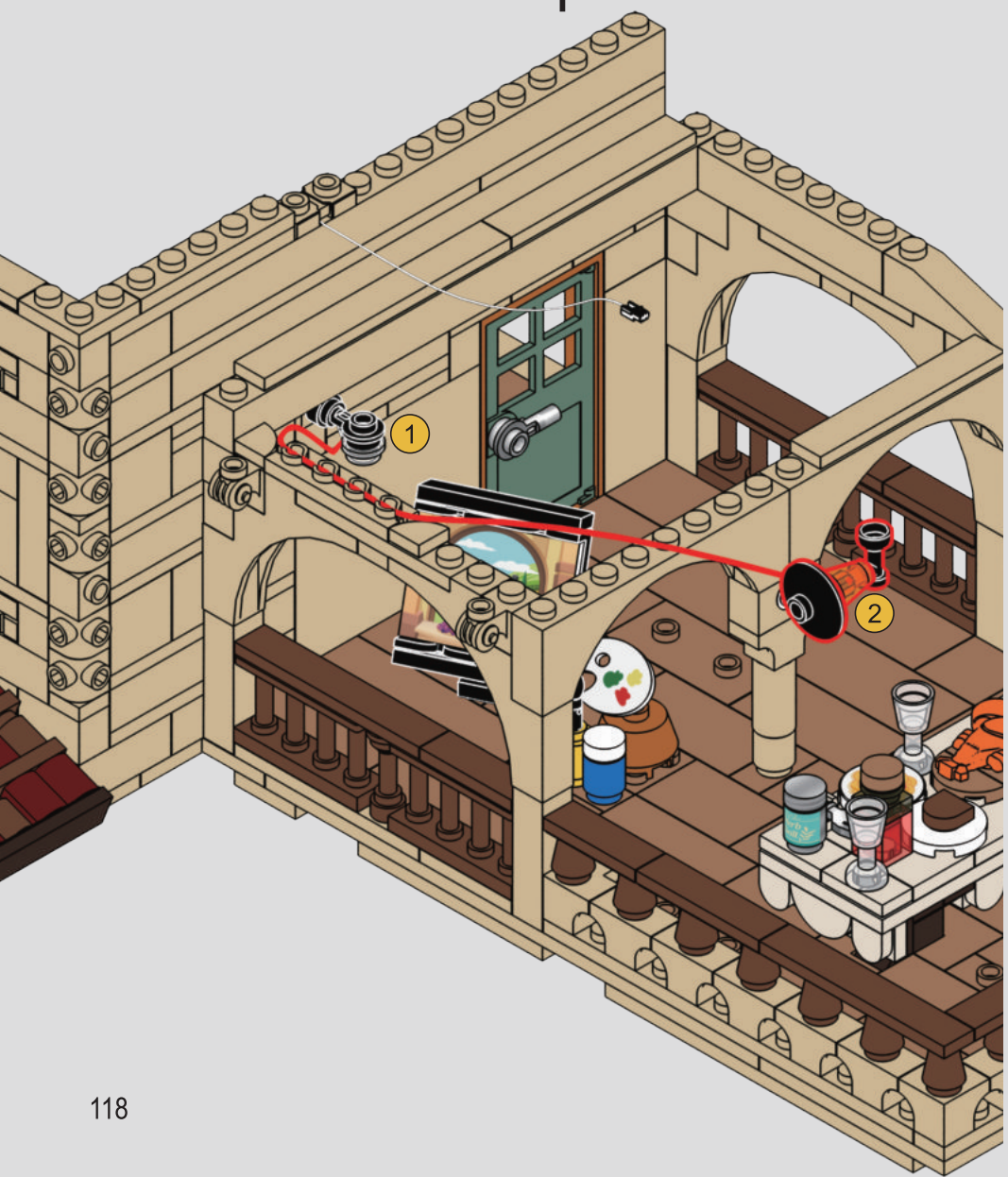

2



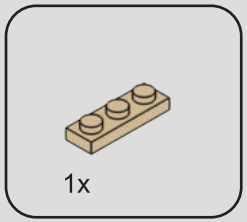

205

1

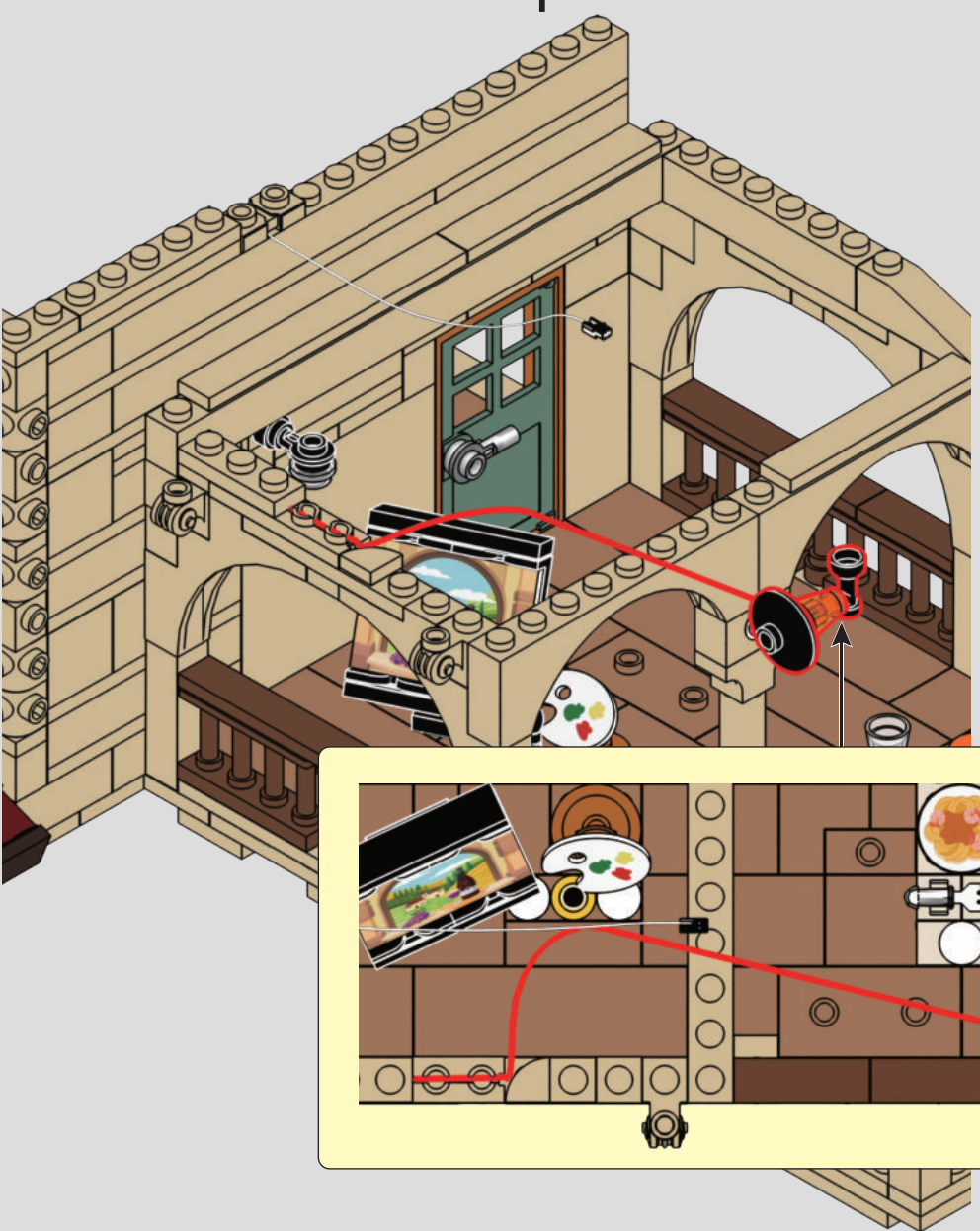

2



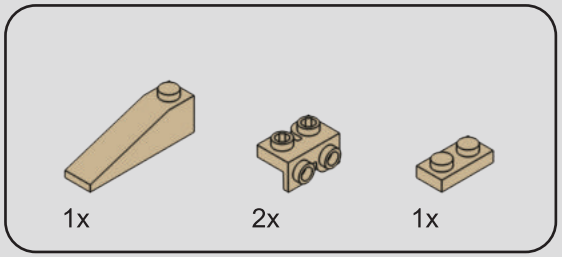

206

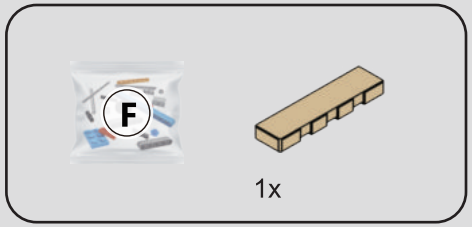

207

1

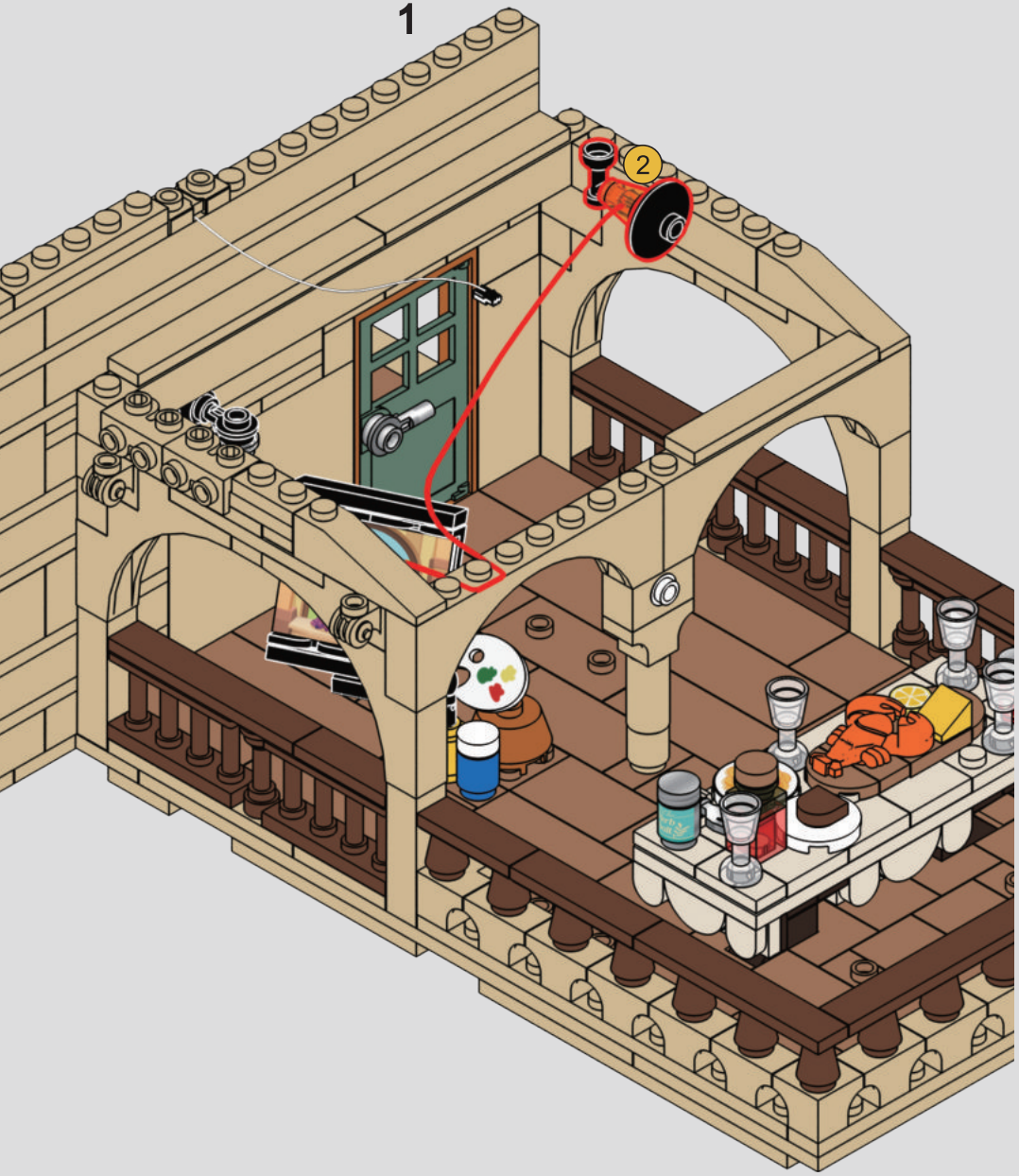

2

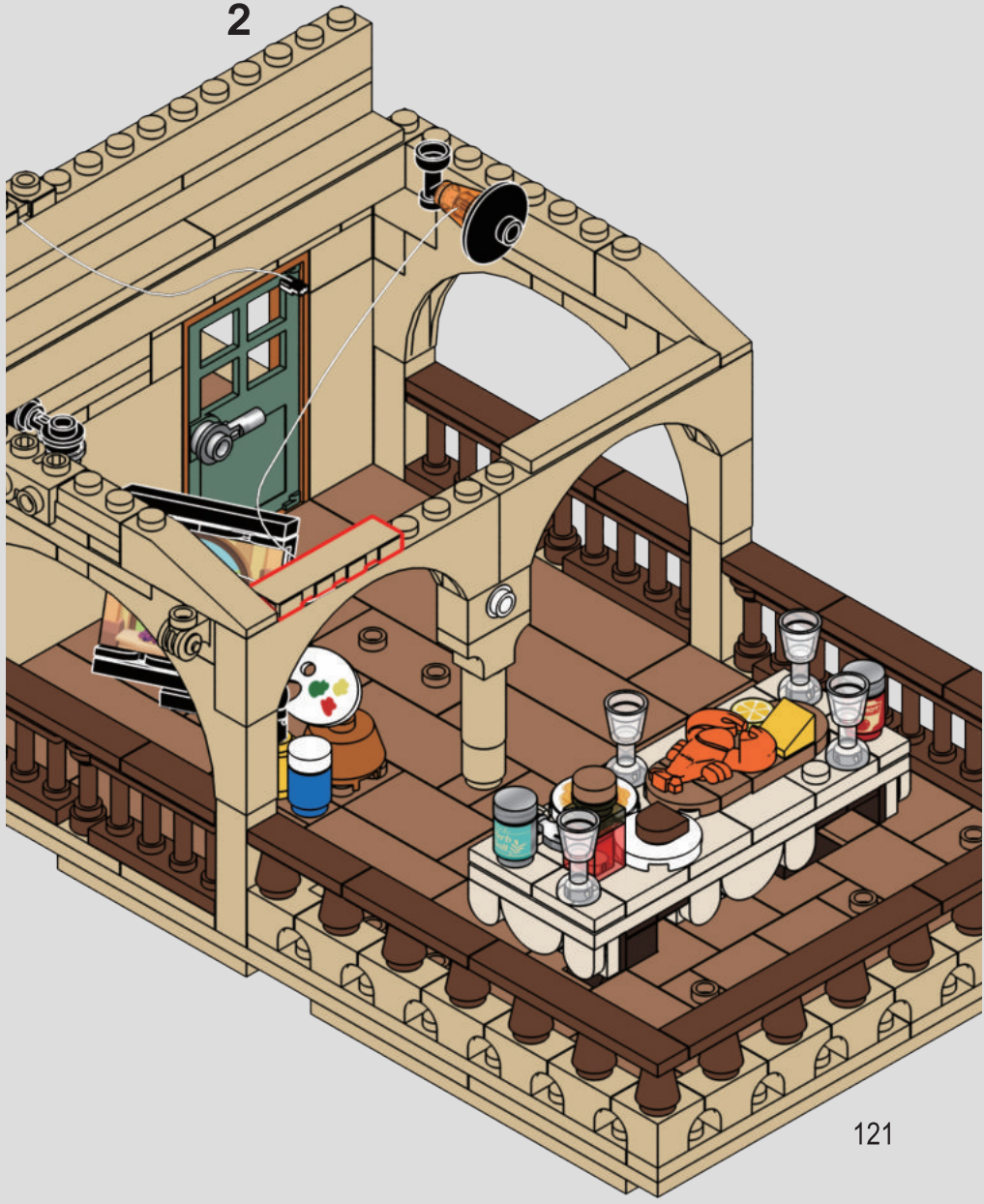

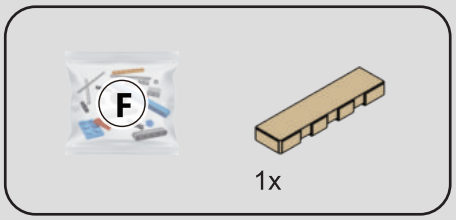

208

1



2

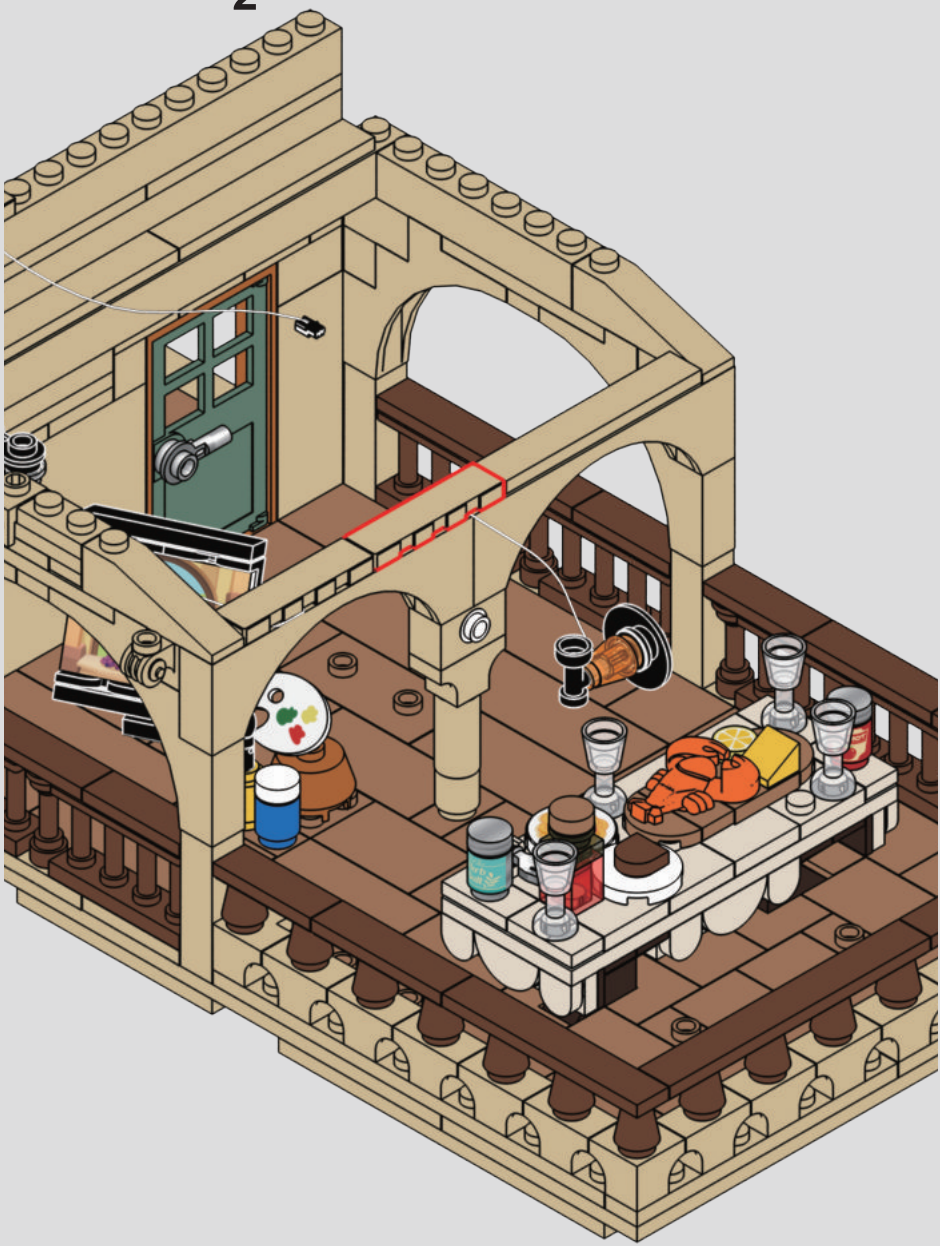

209

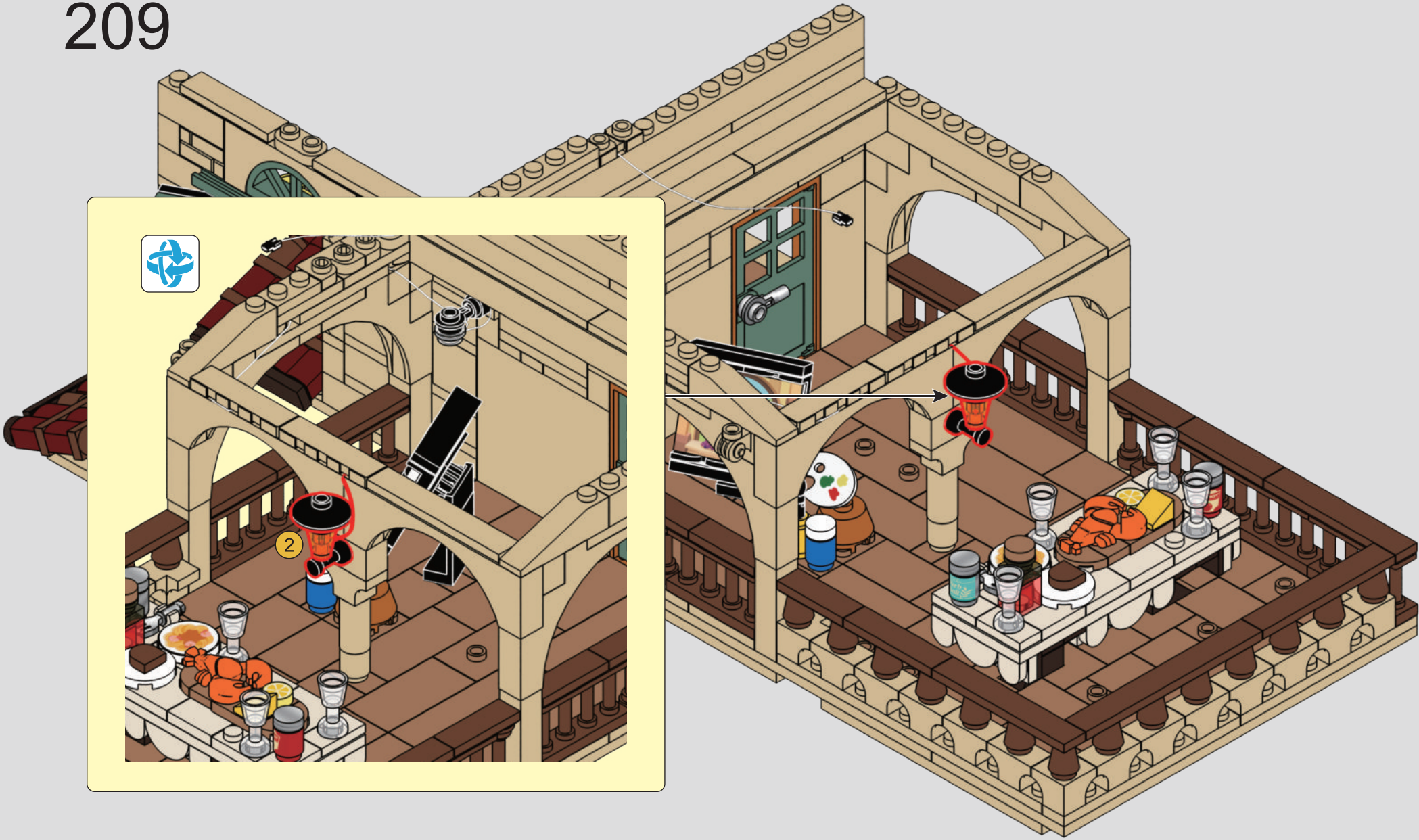

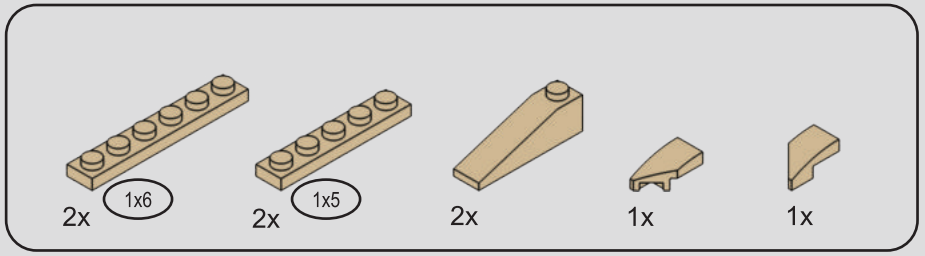

210



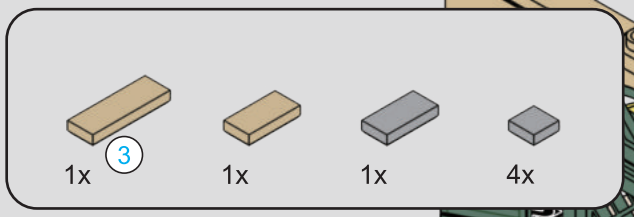

211

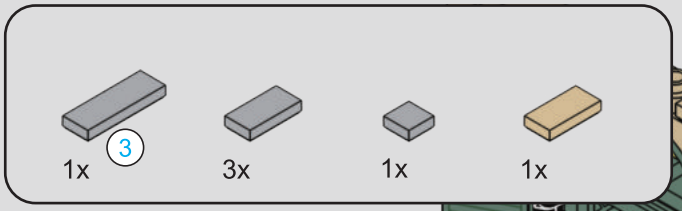

212

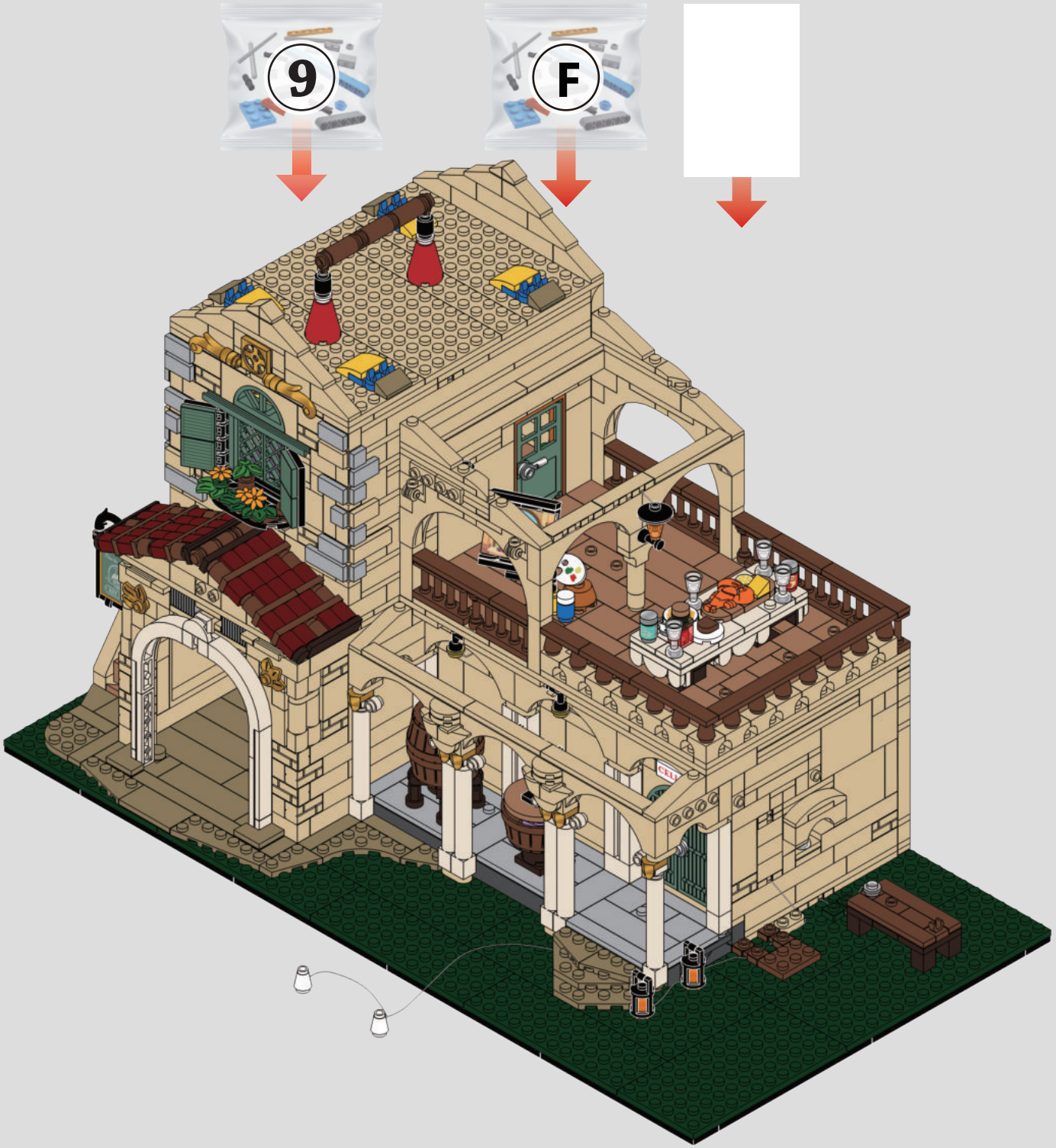
9
F

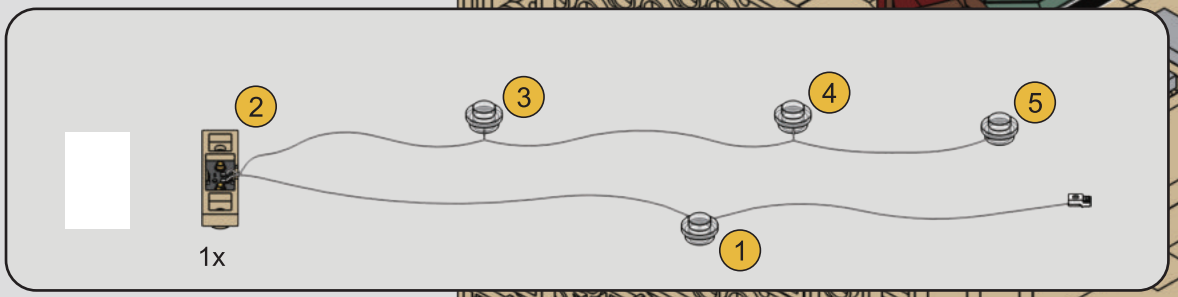

213

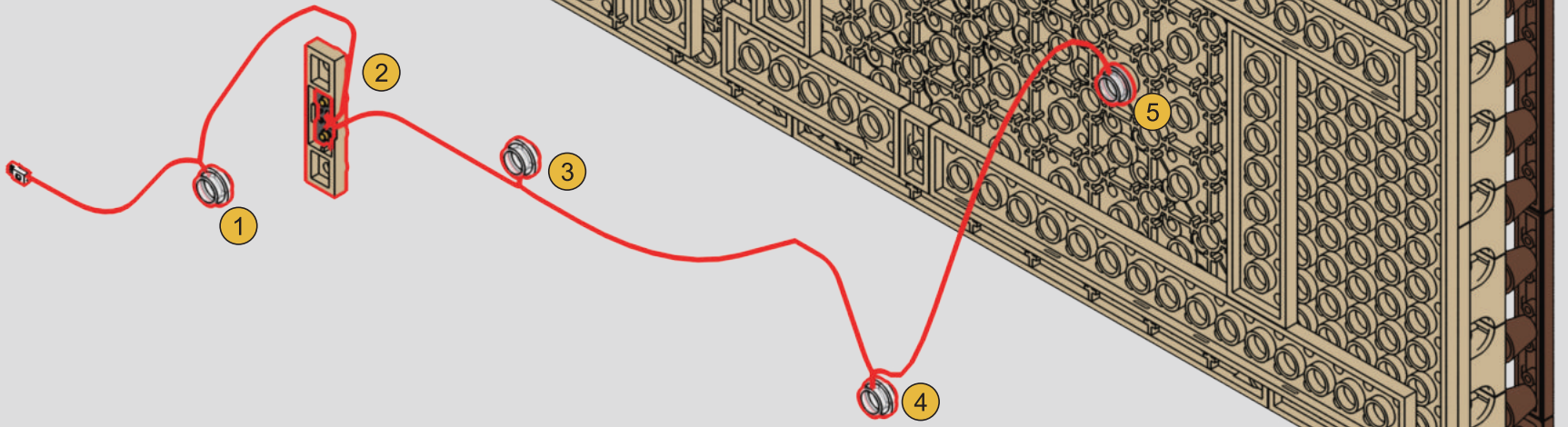

214

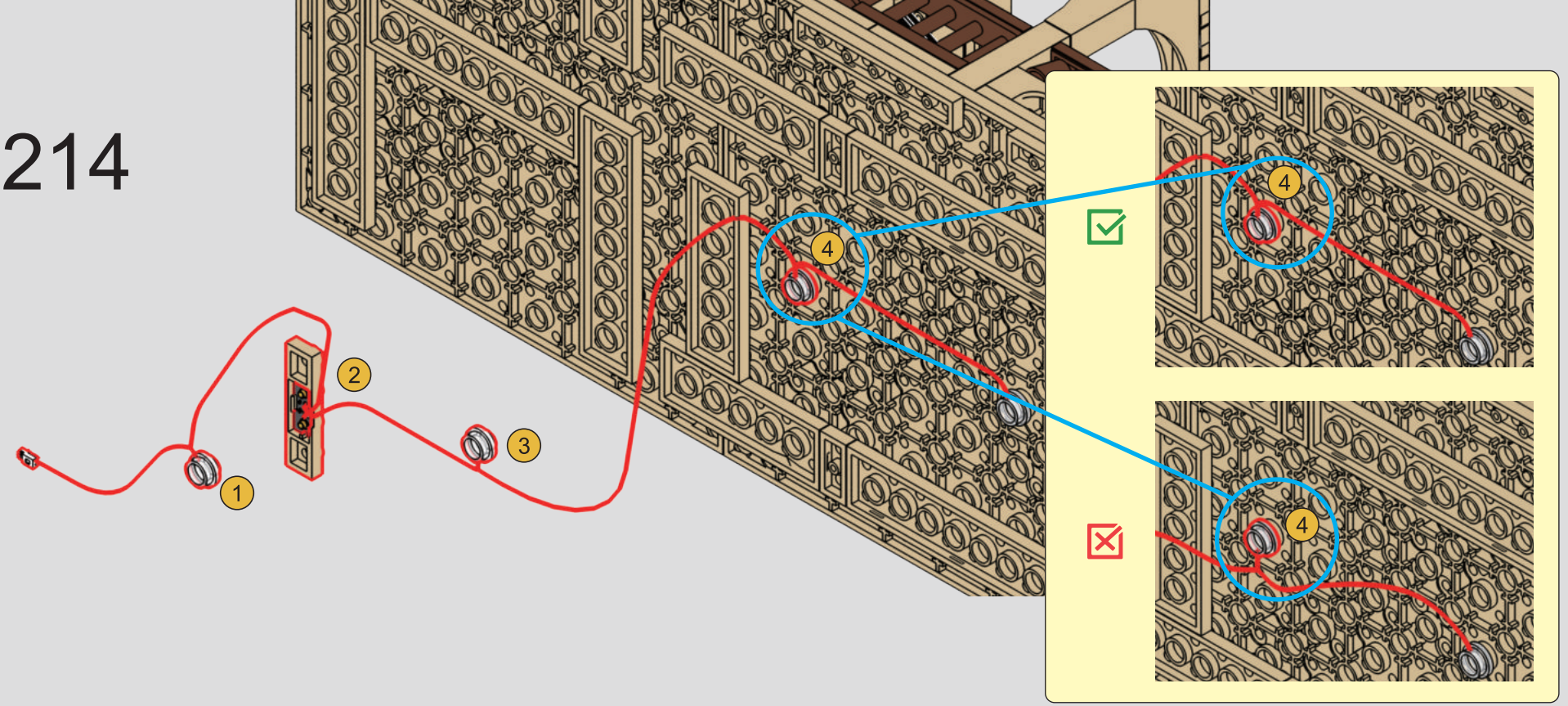

215

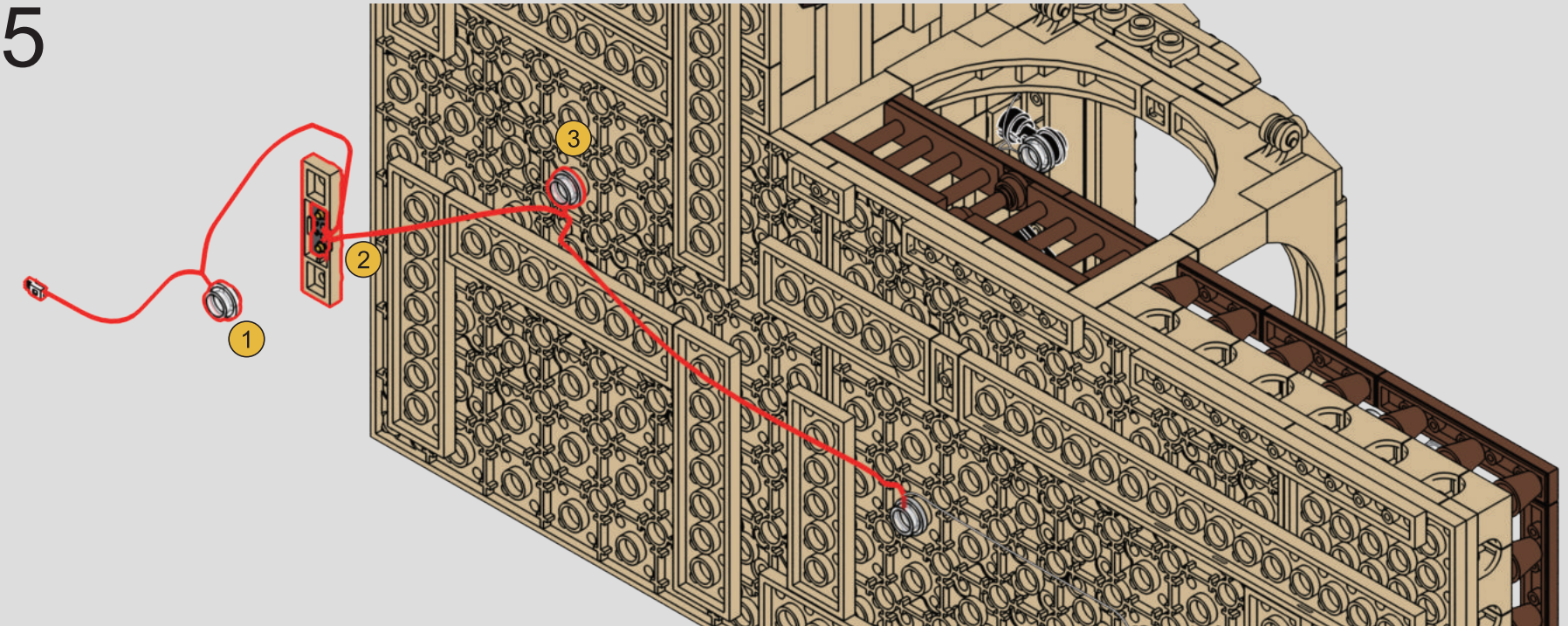

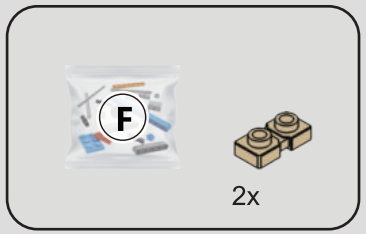

216

1

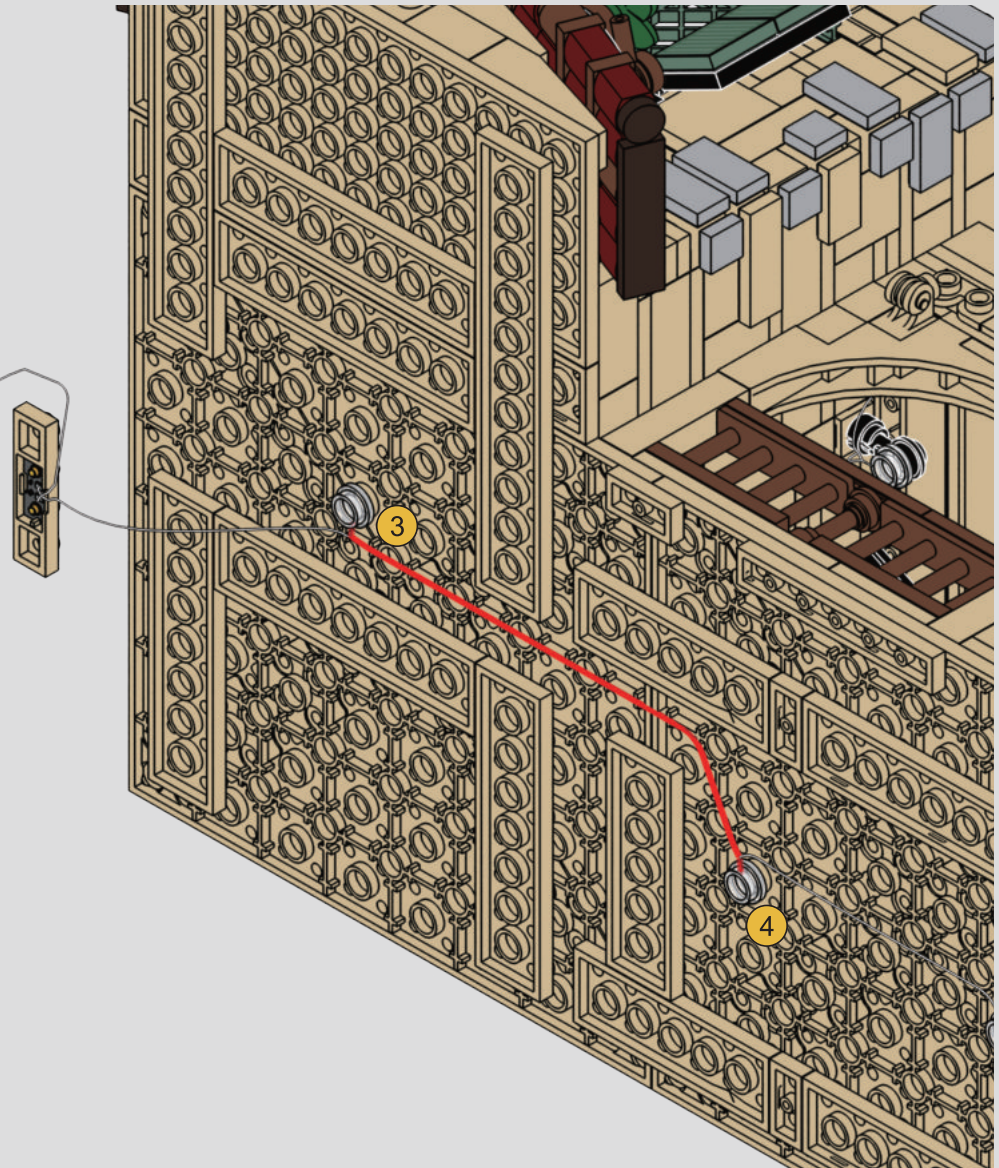

2

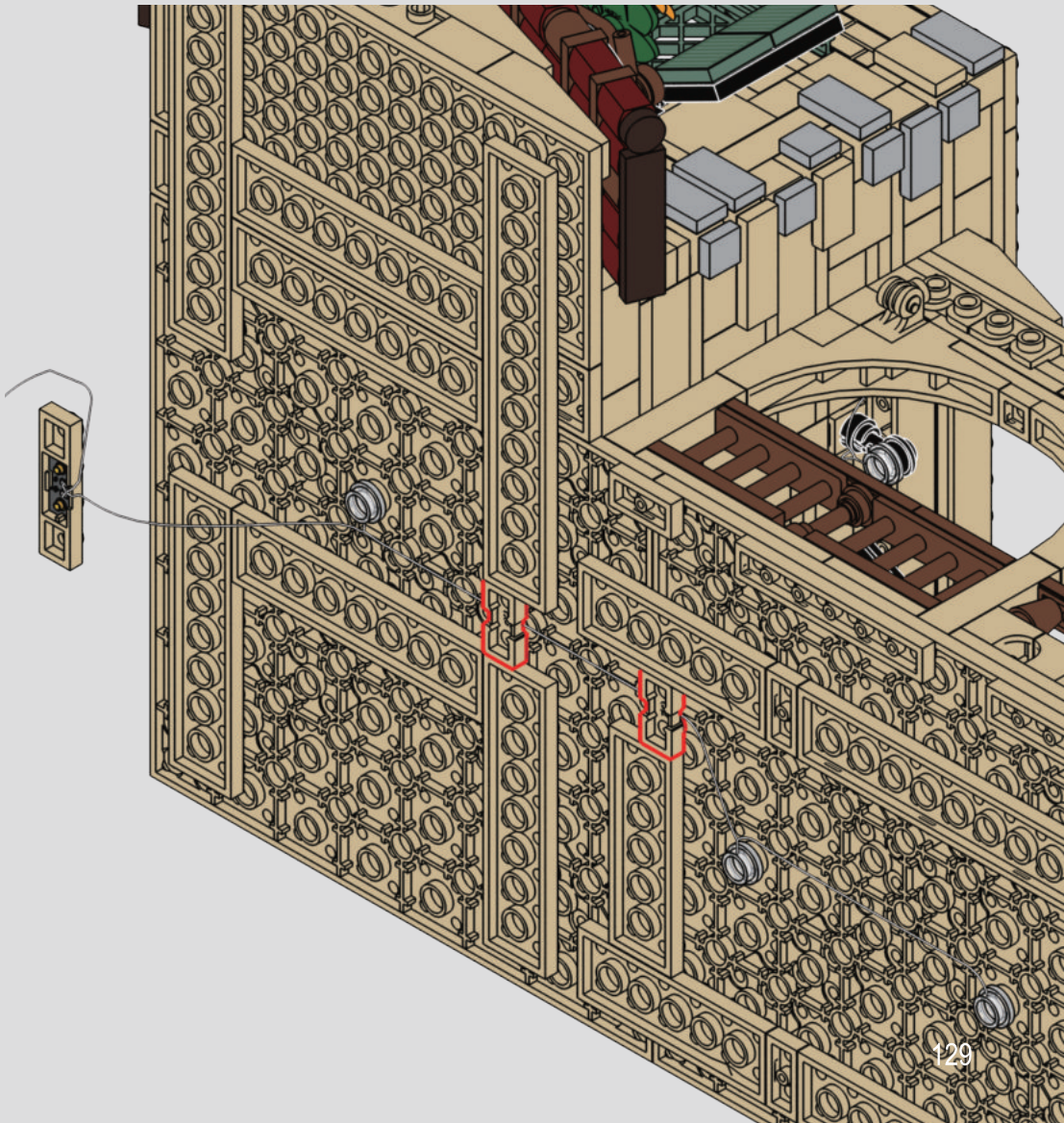

217

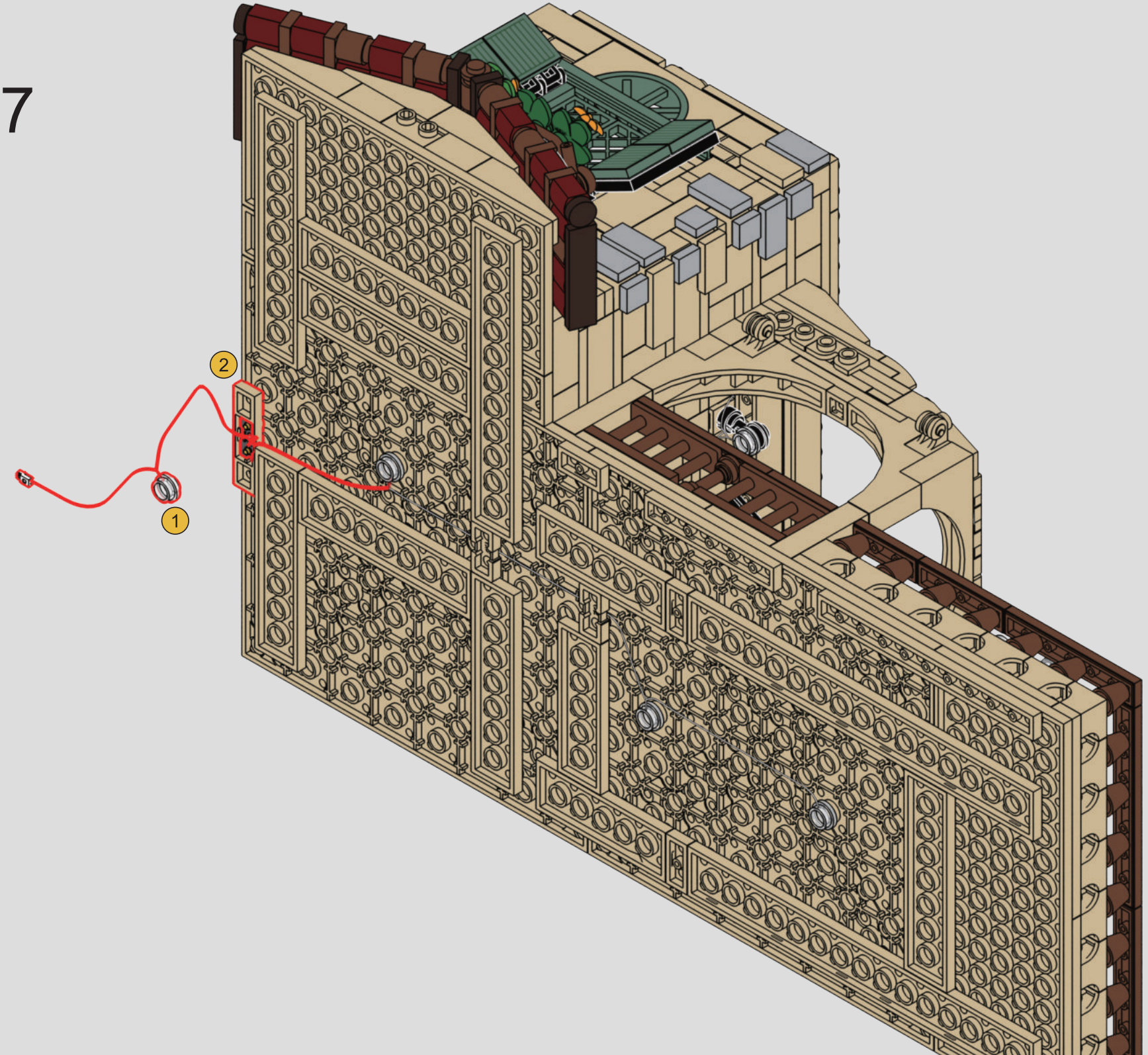

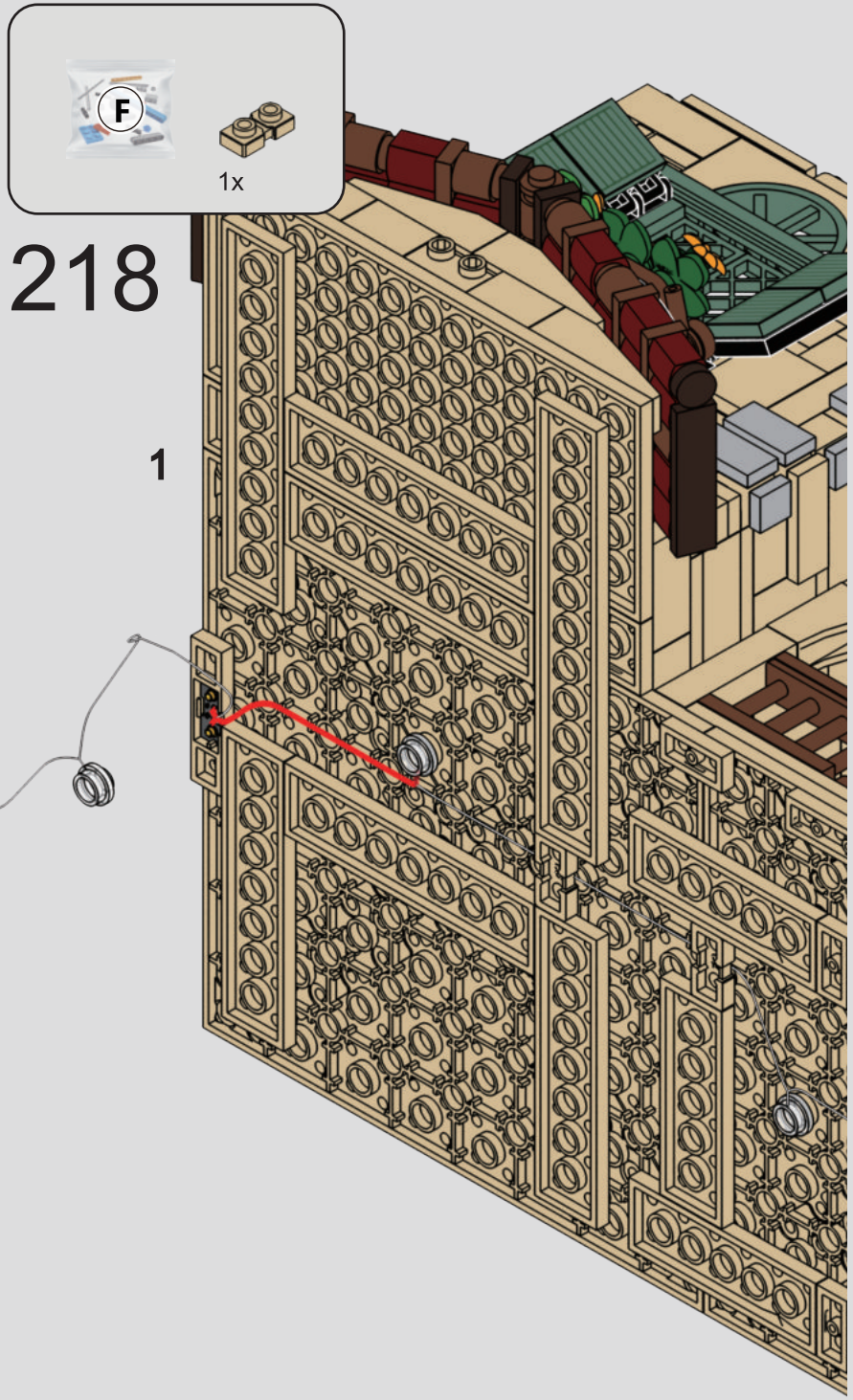

218

1

2

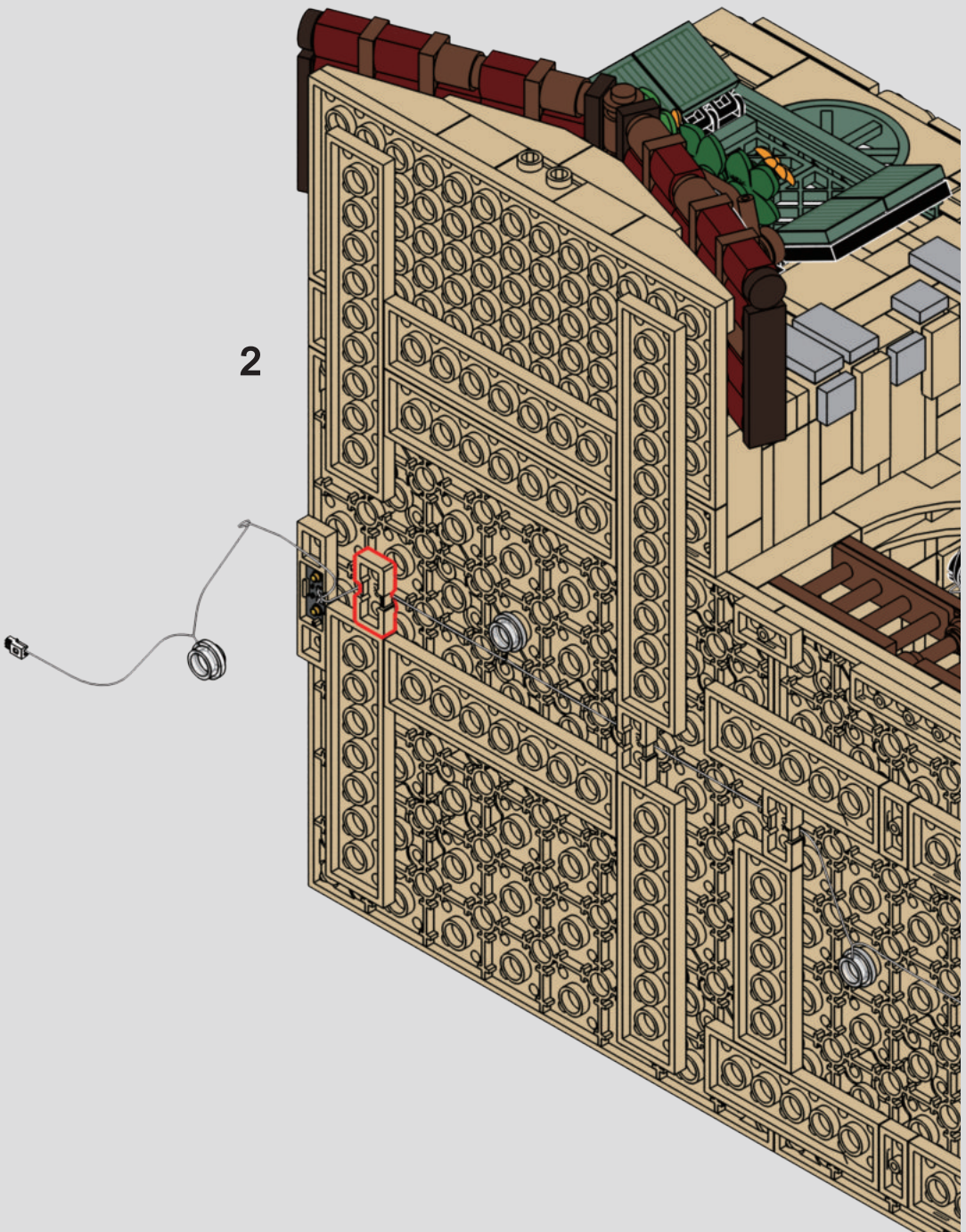

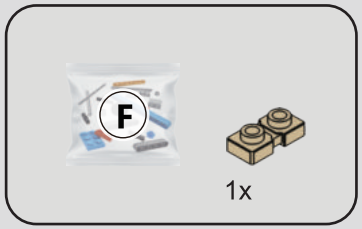

219

1

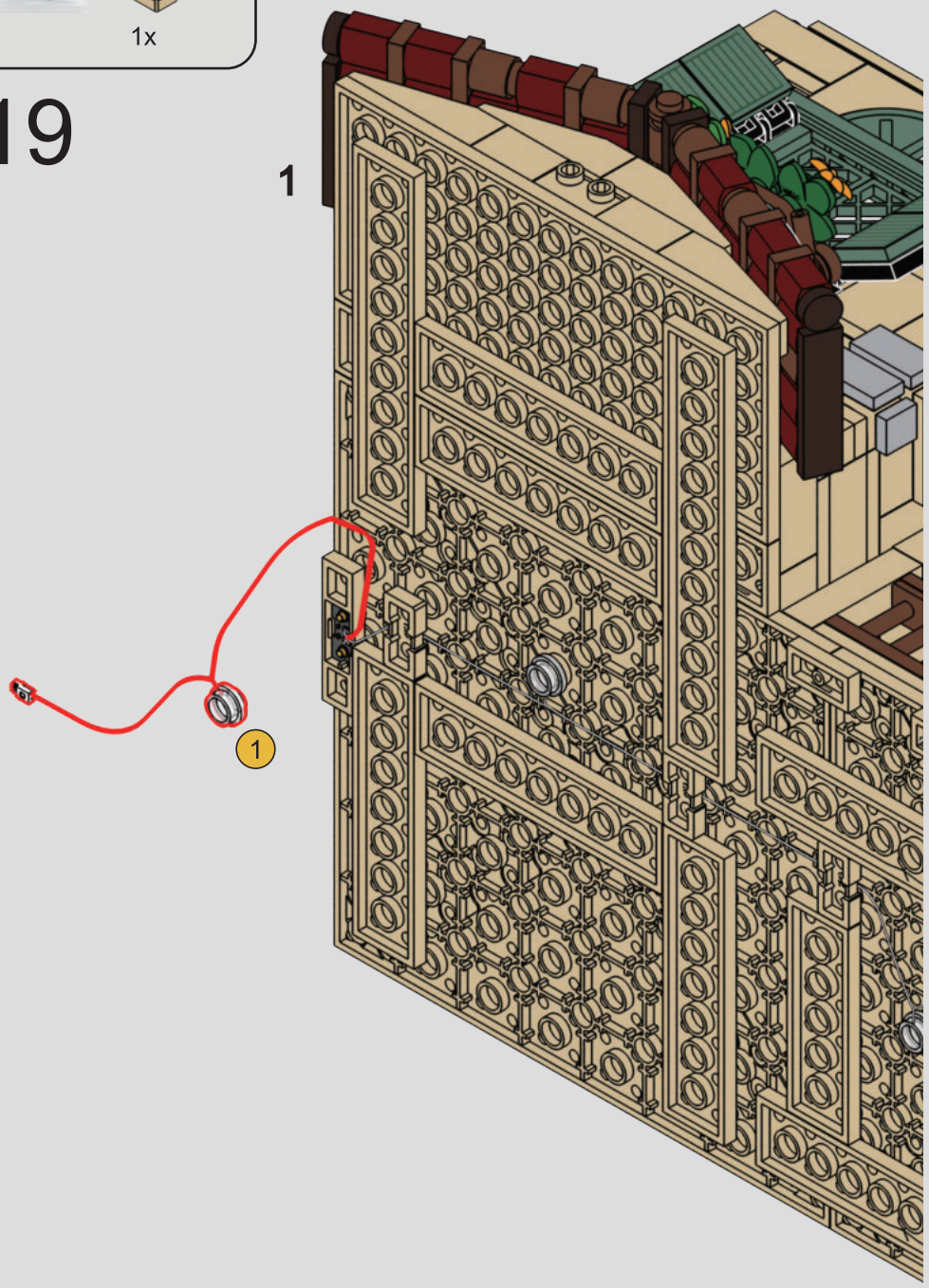

2

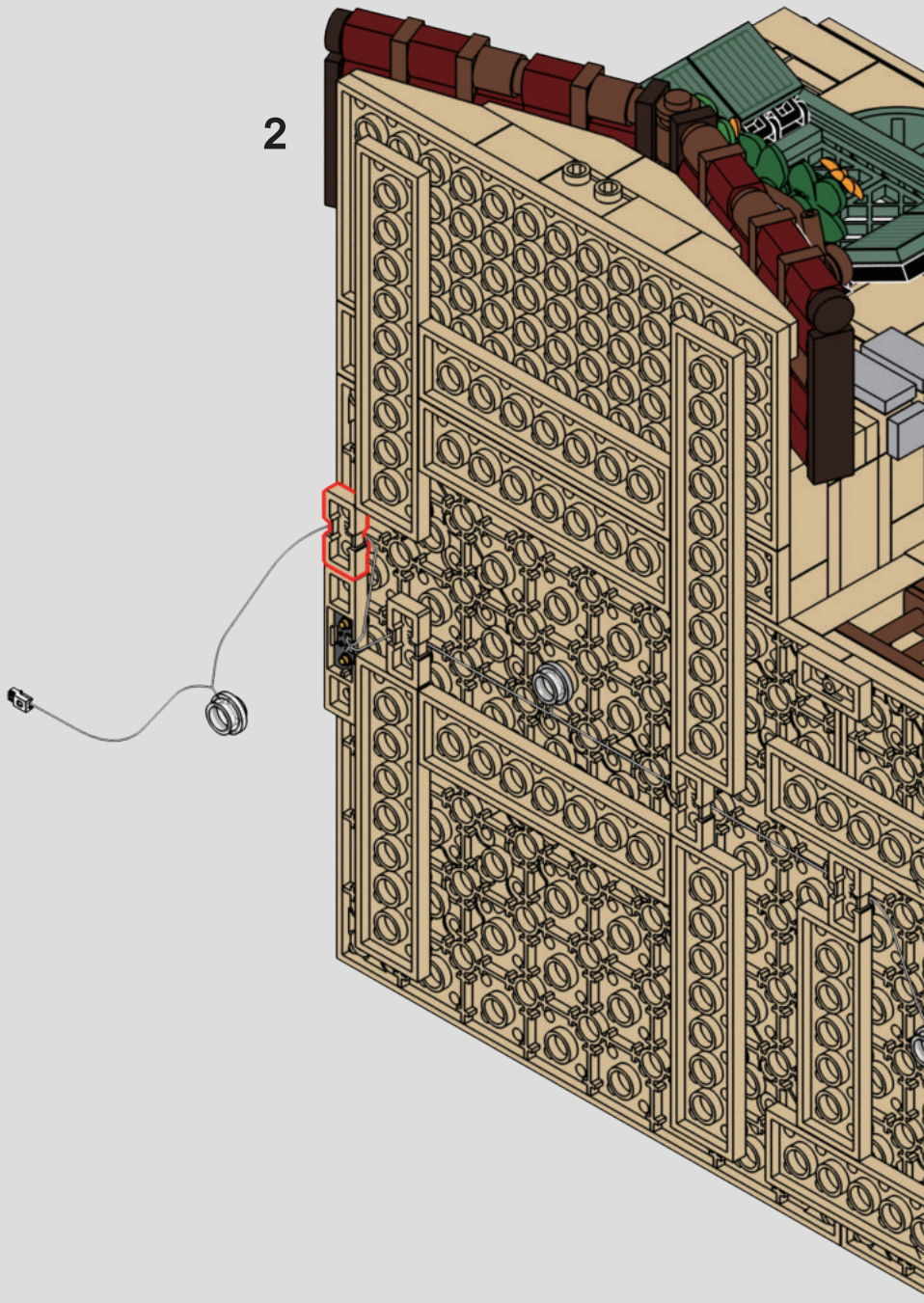

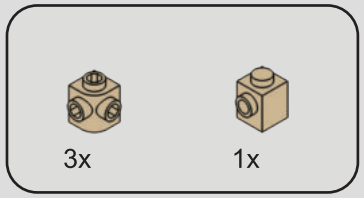

220



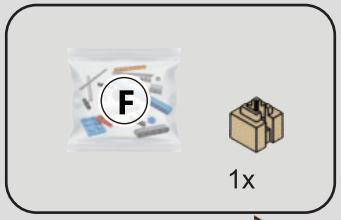

221



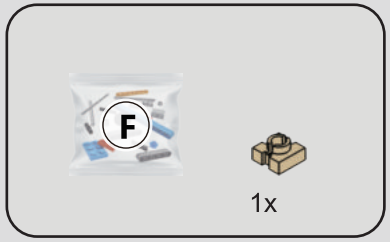

222

1

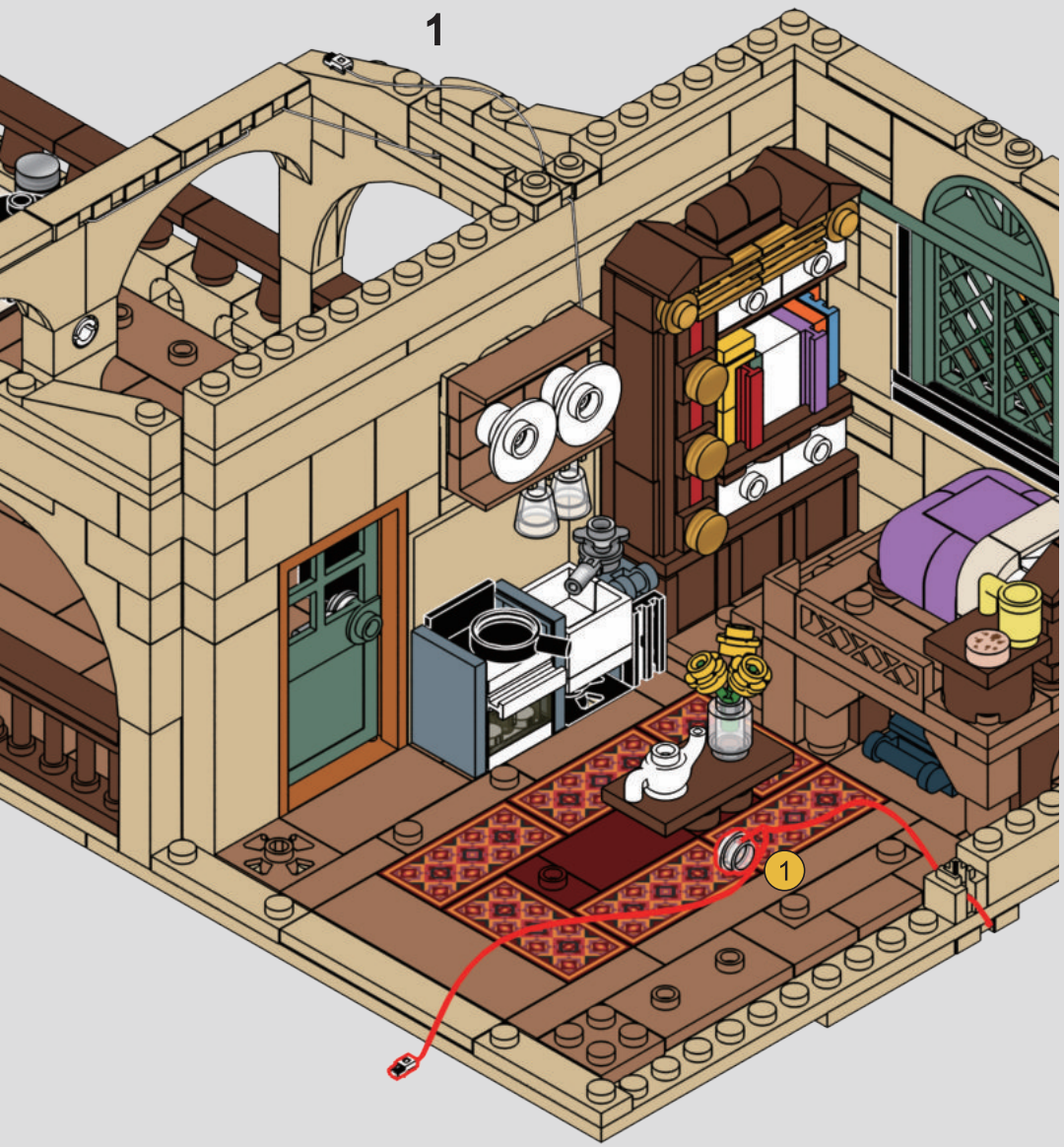

2



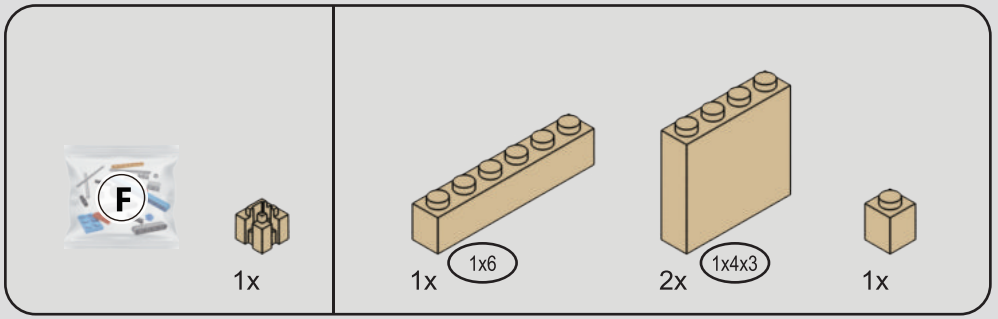

223

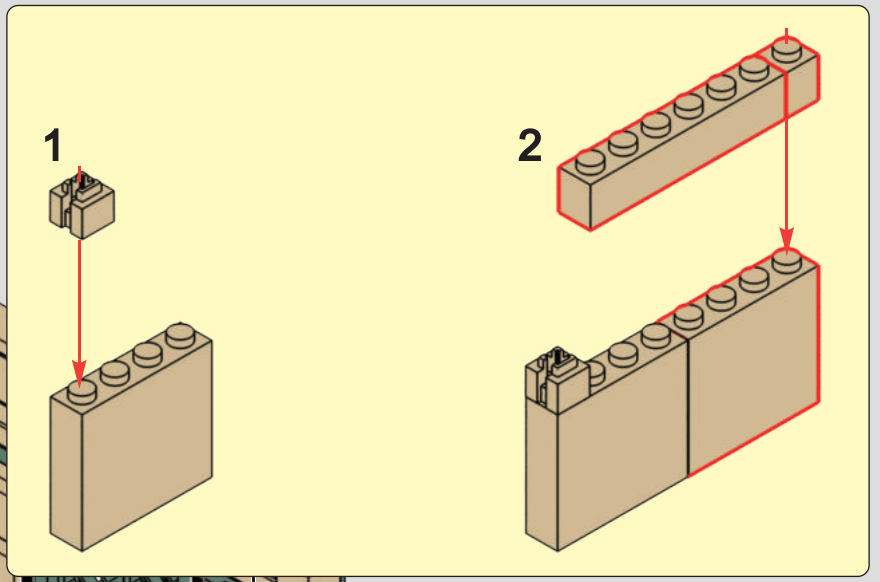

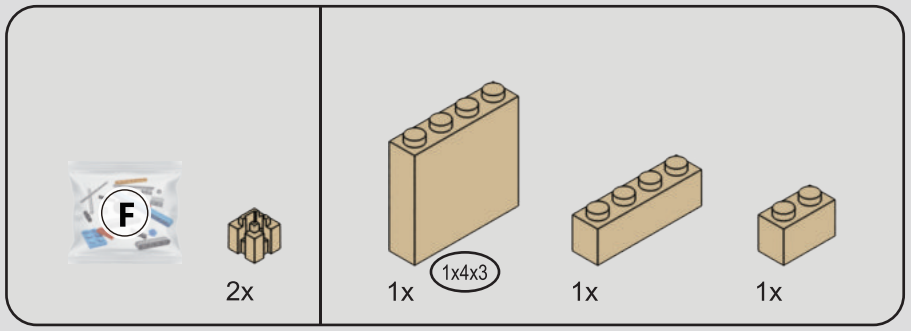

224



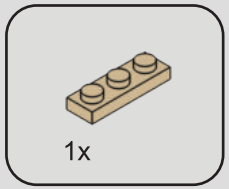

225

1

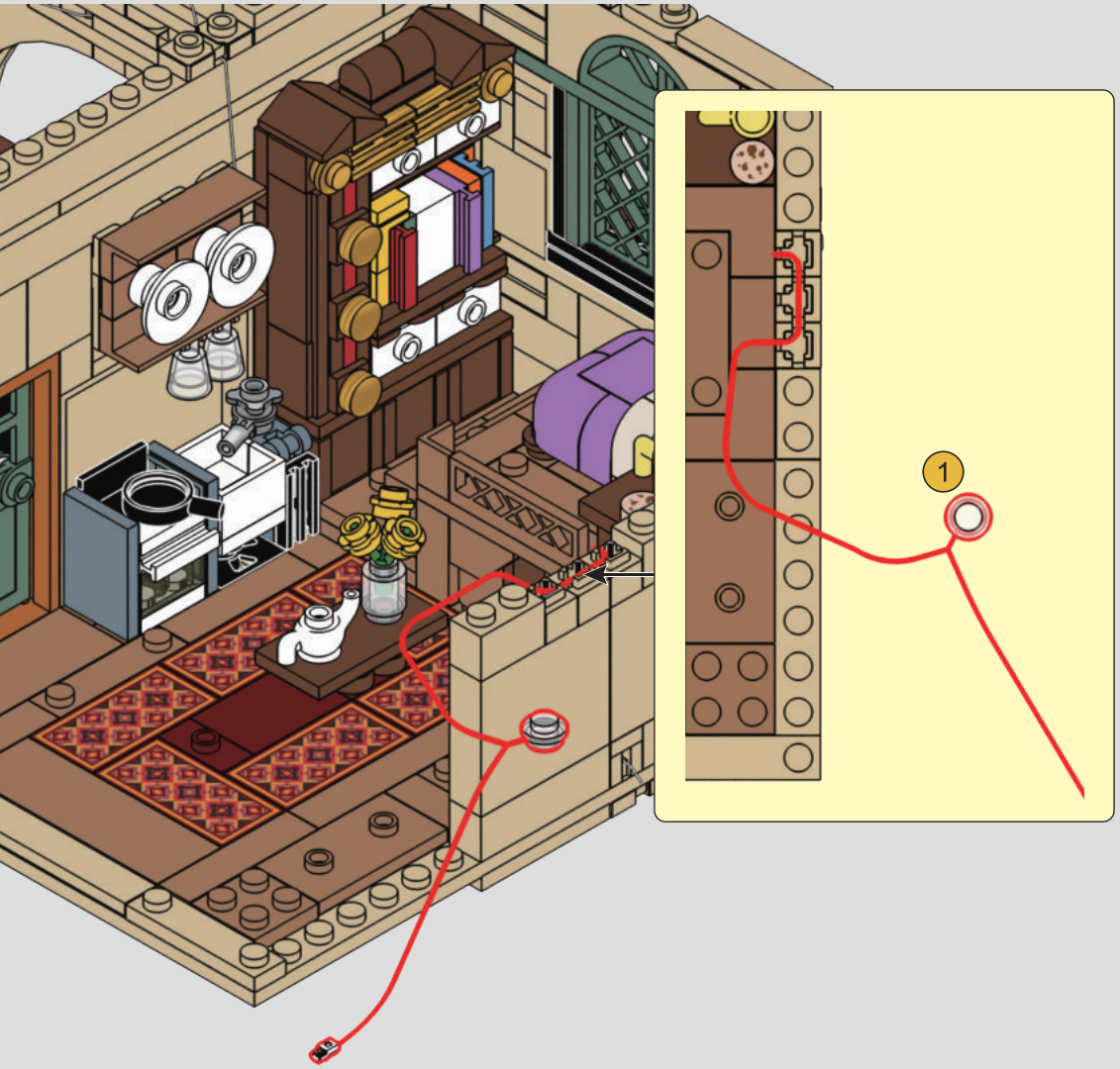

2



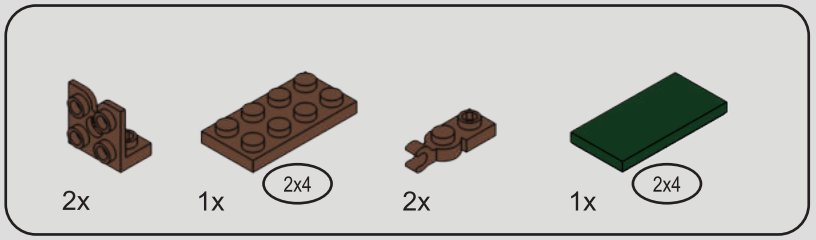

226

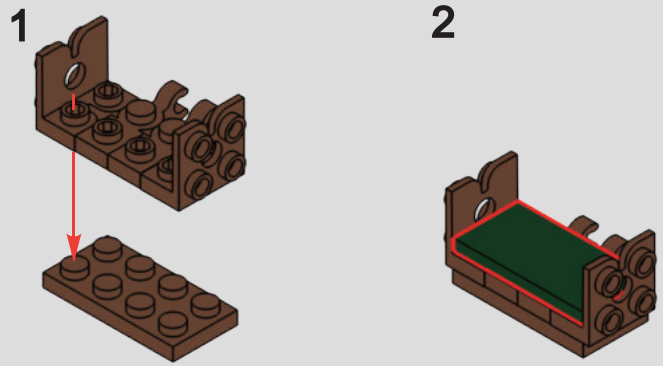

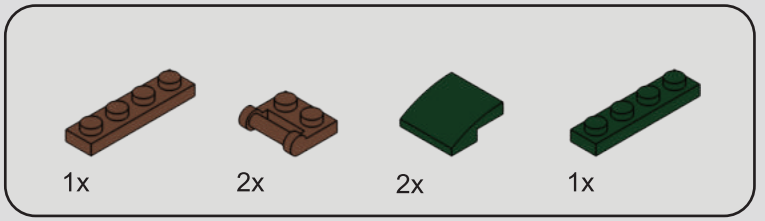

227

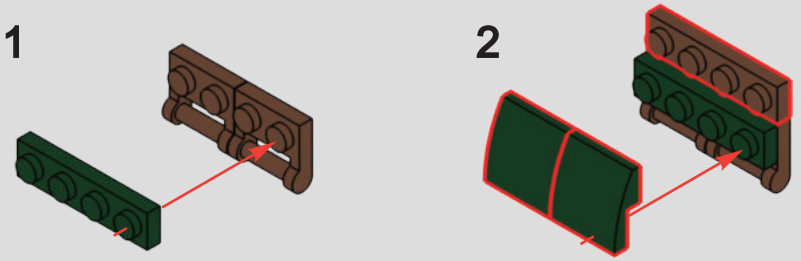

228

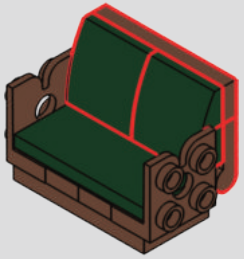

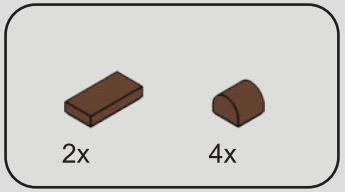

229

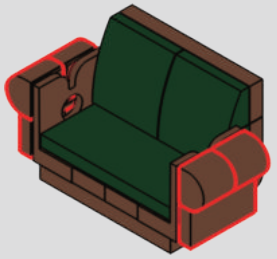

230

1

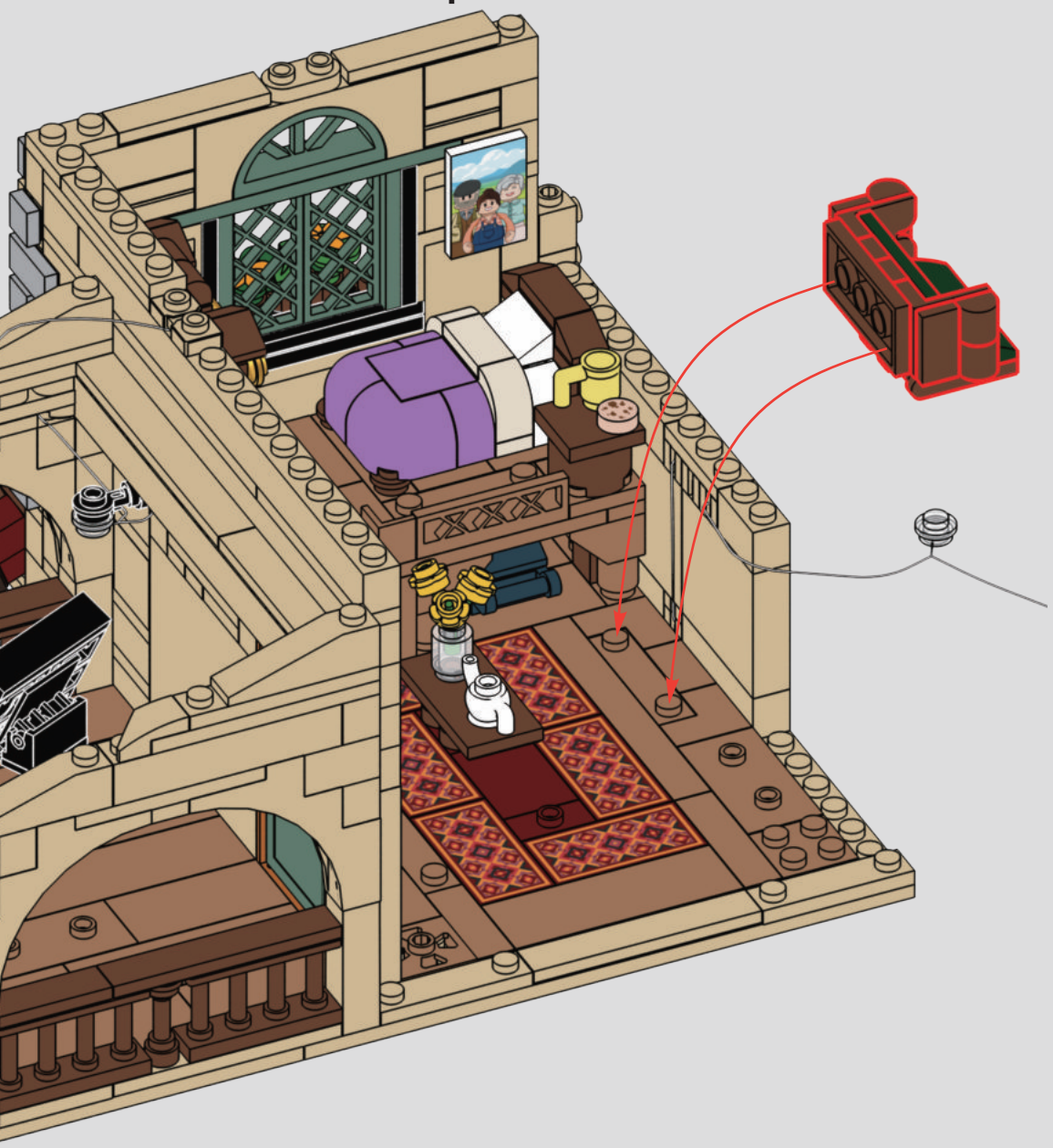

2



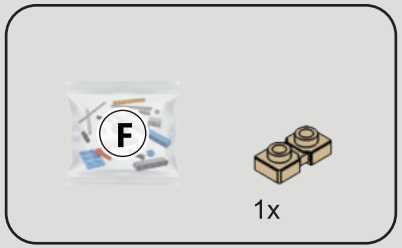

231

1



2



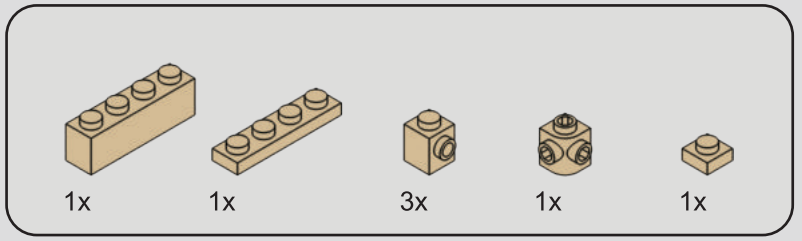

232



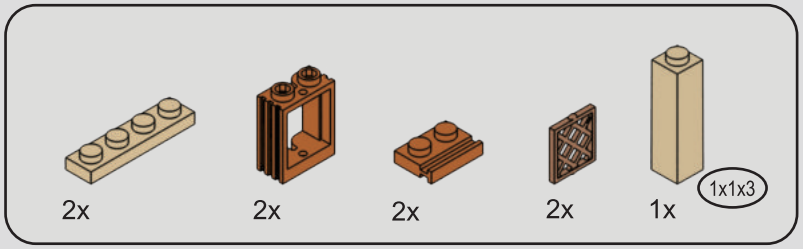

233

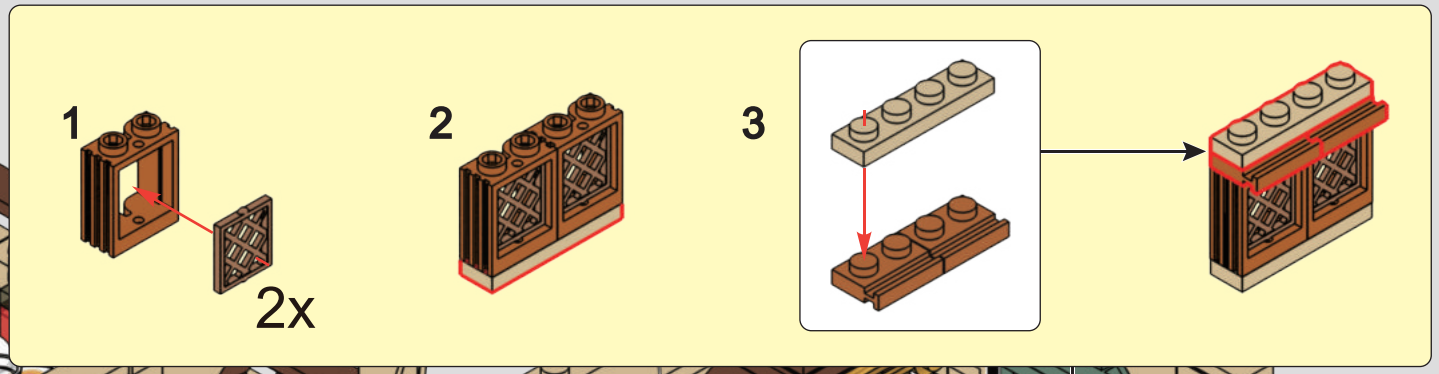

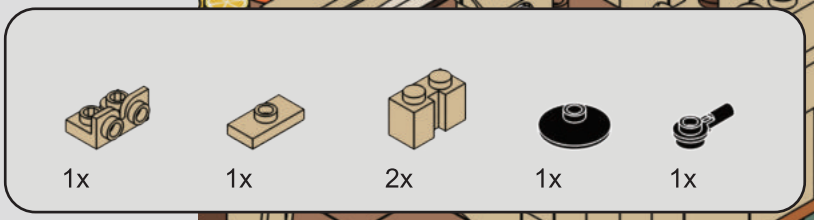

234

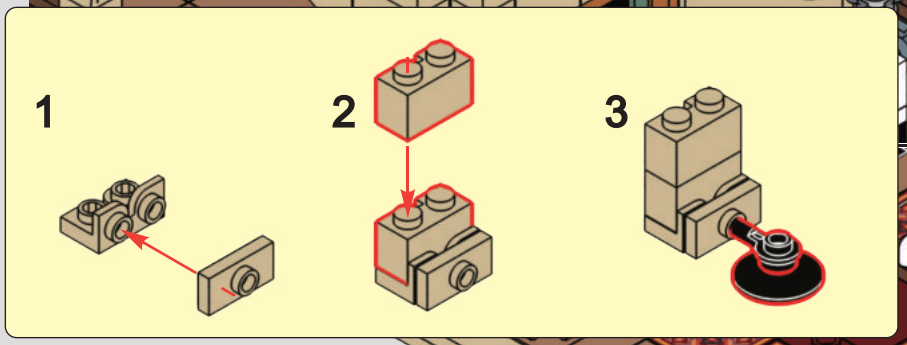

235

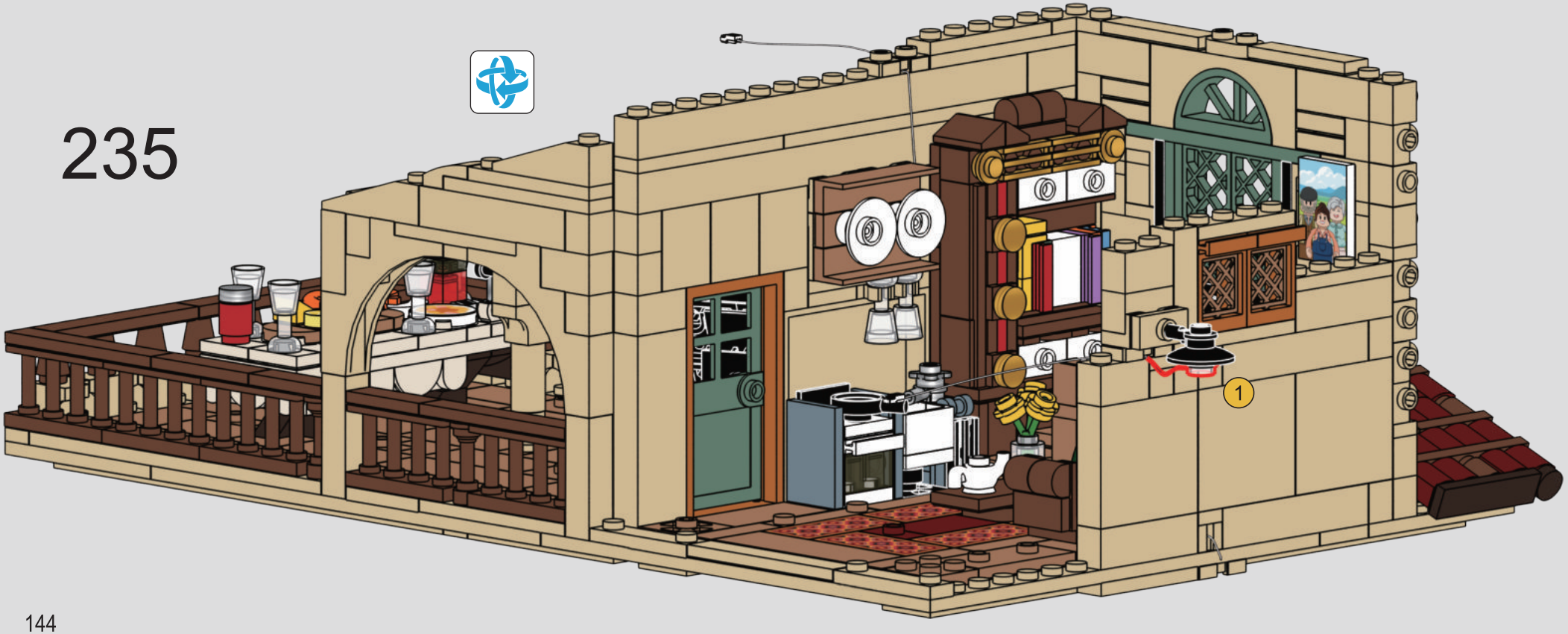



1x

236

1



2



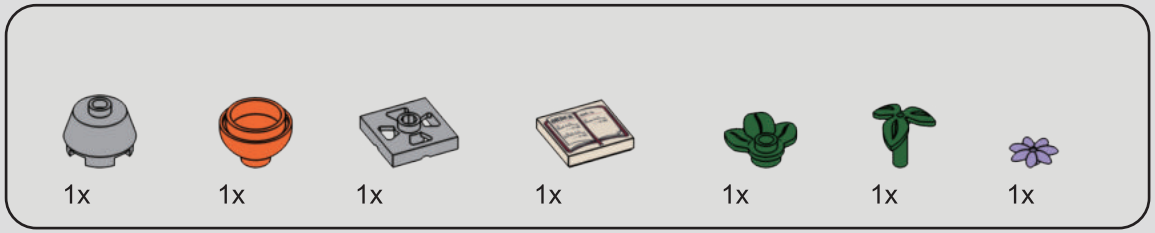

237

1



2



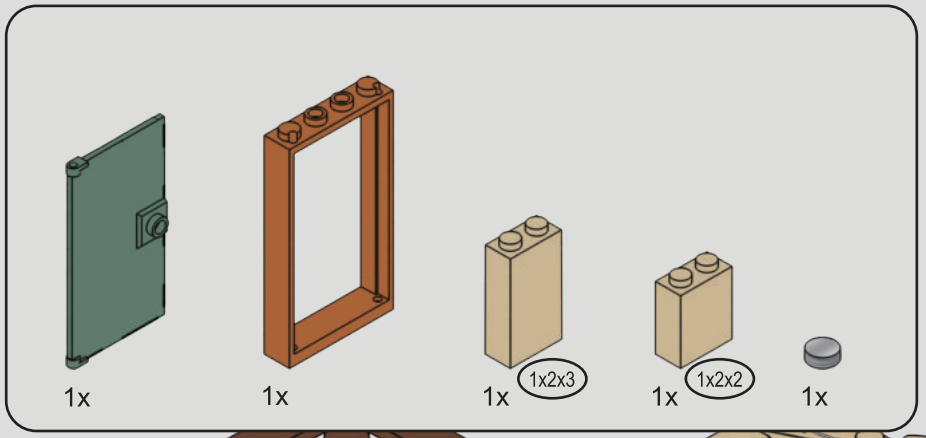

238



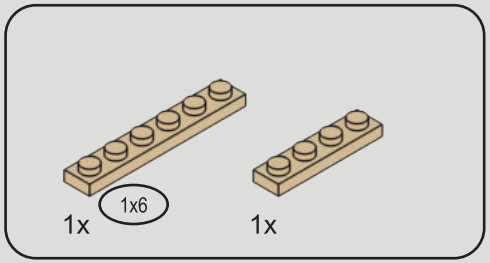

239

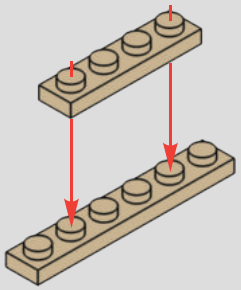

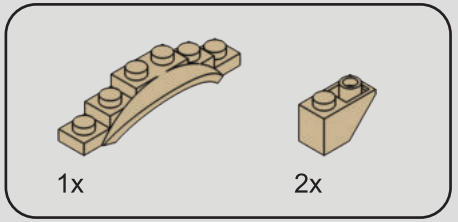

240

1

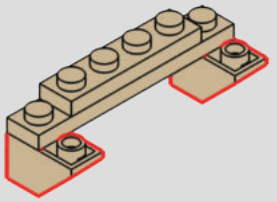

2

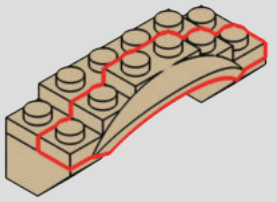

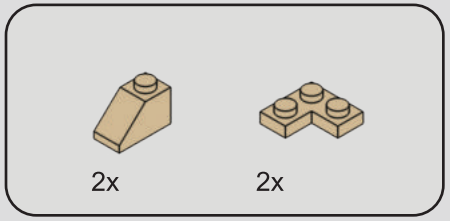

241

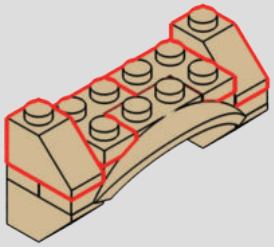

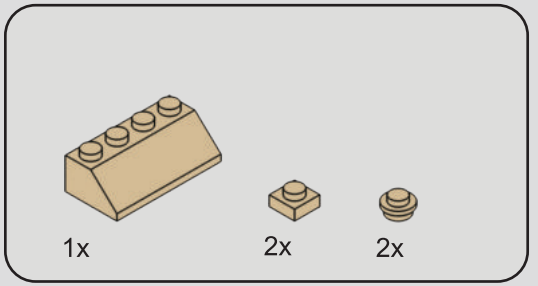

242

1



2

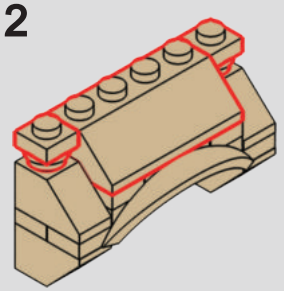

243



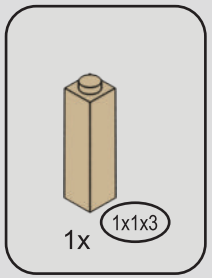

244



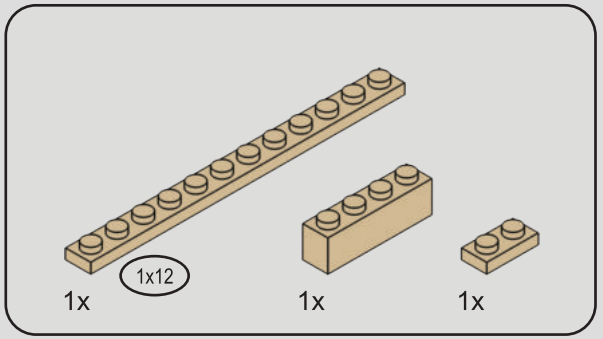

245

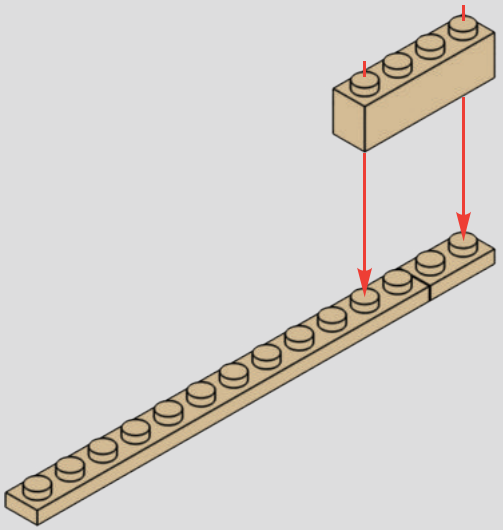

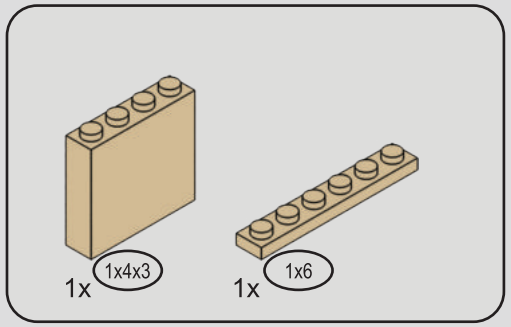

246

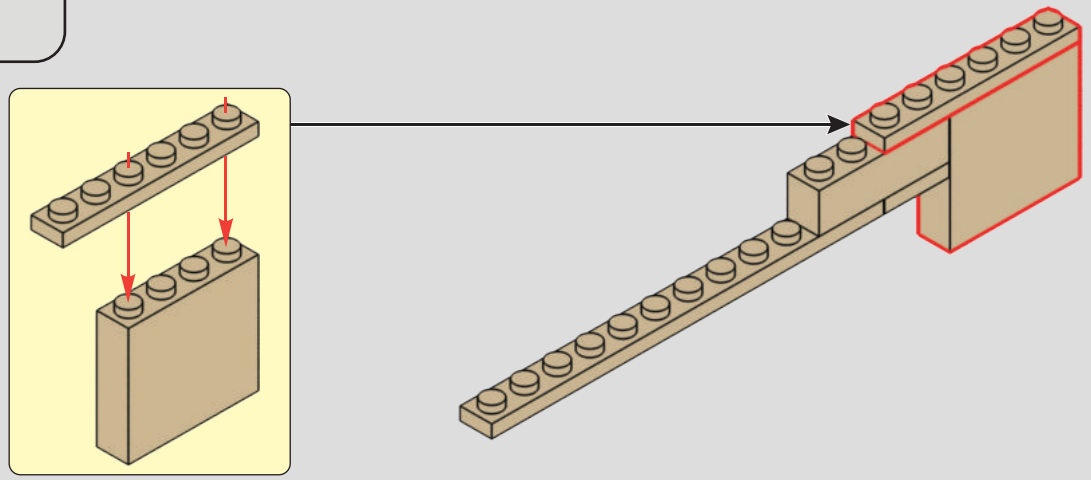

247



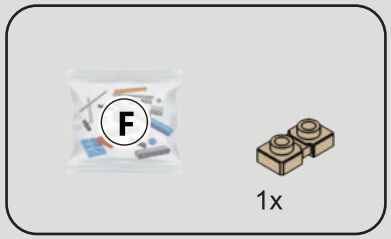

248

1



2





249

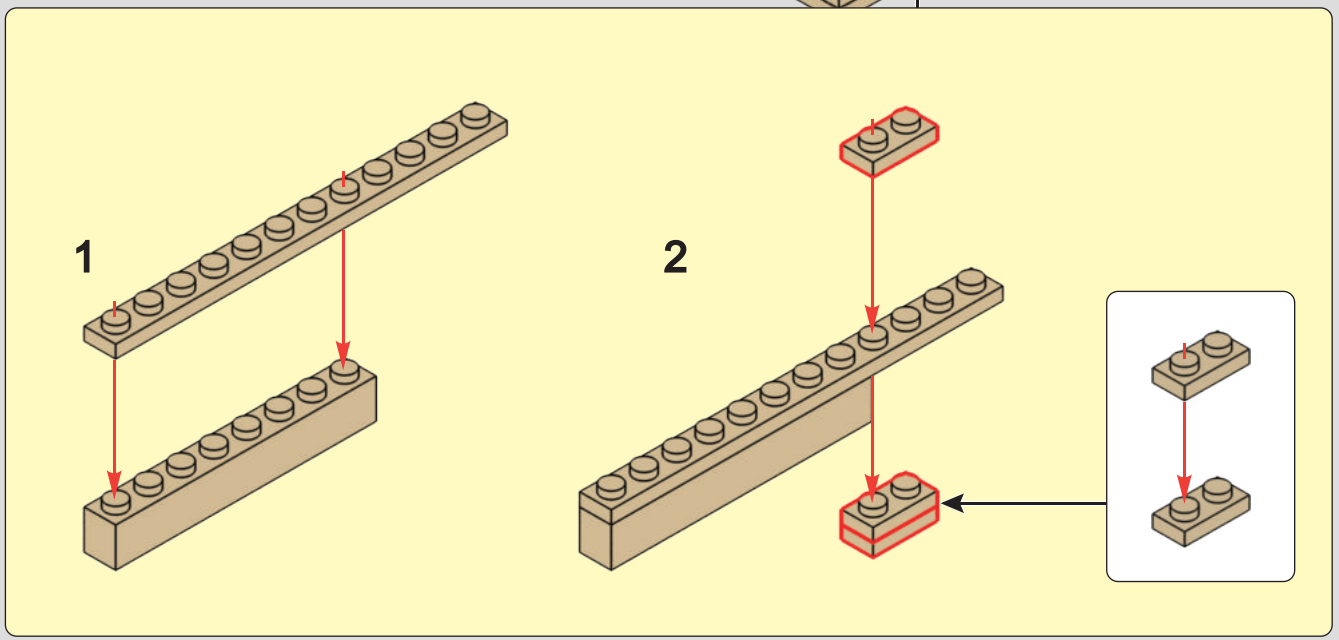



1x

250

1



2



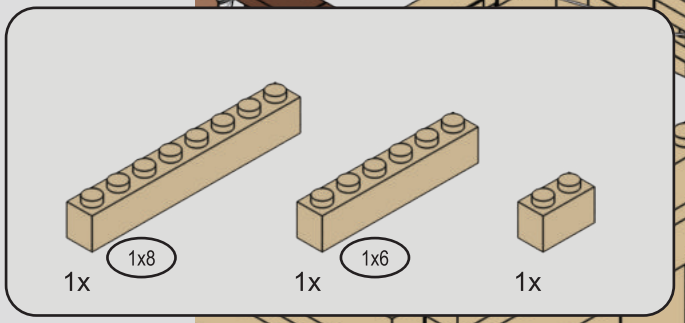

251

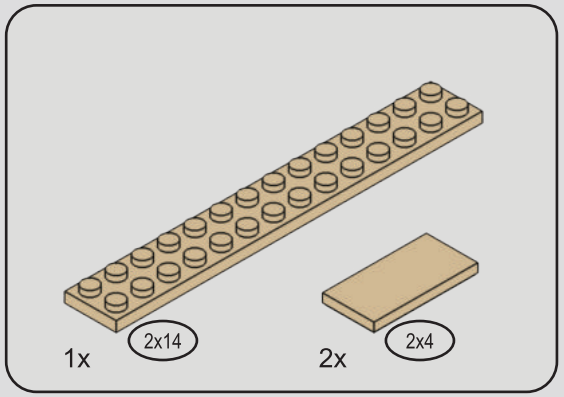

252

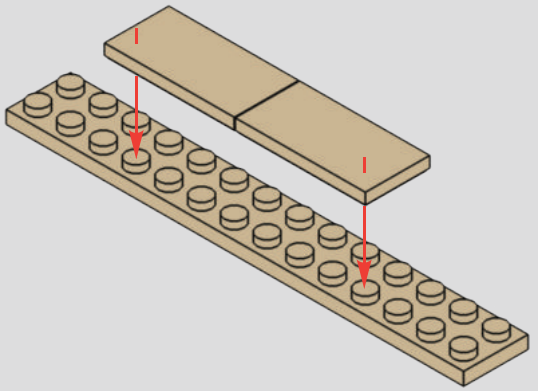

253

1



2



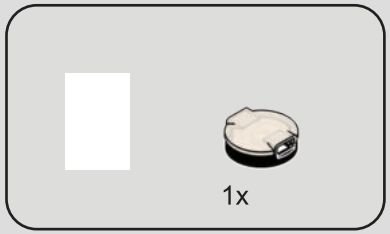

254

1



2

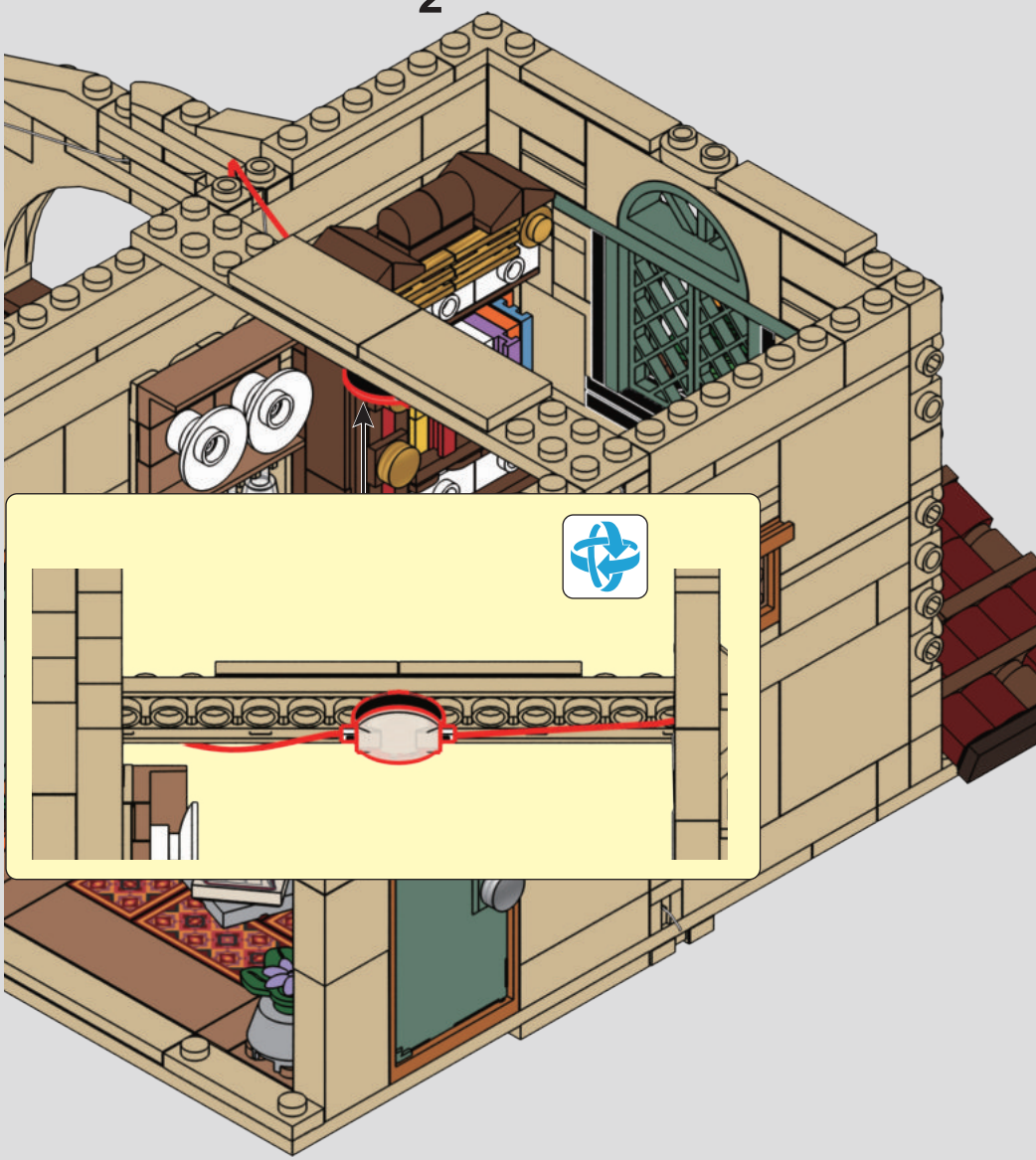

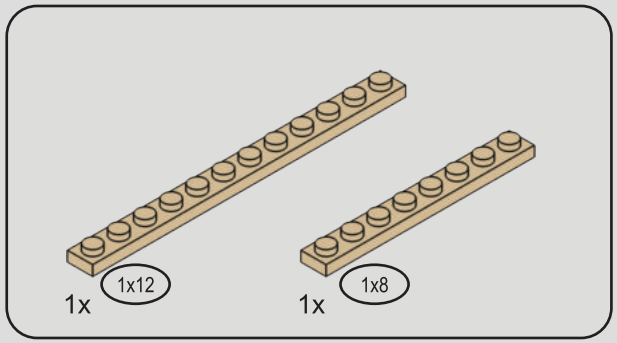

255

1



2

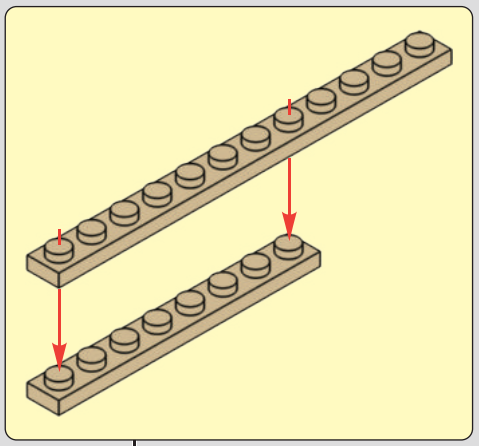



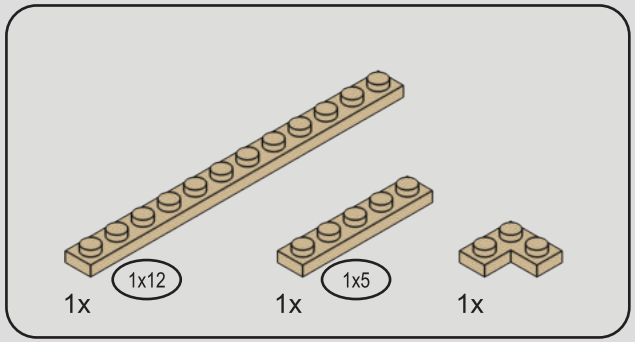

256

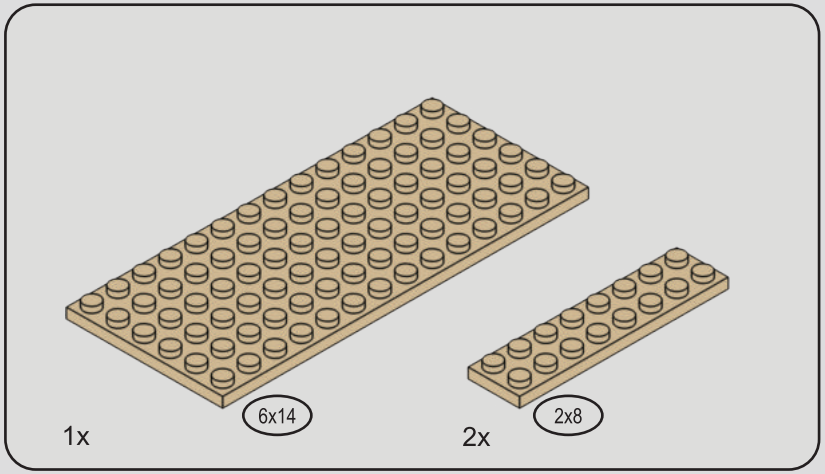

257

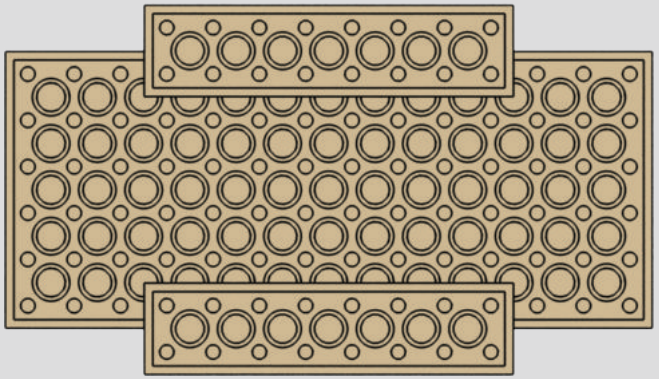

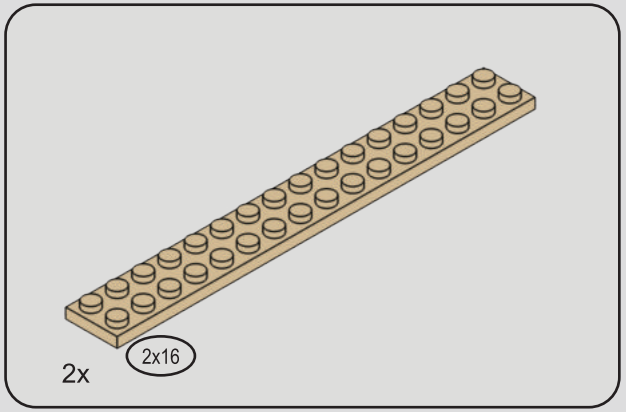

258

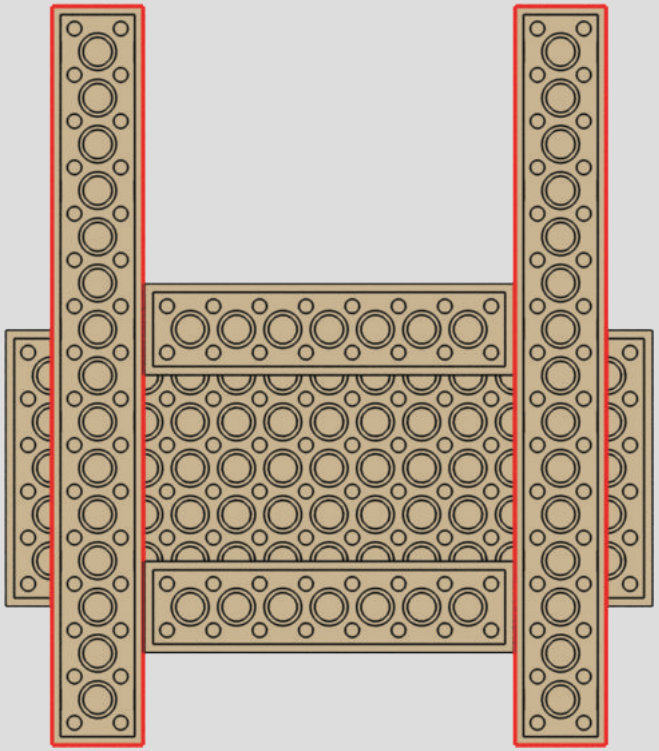

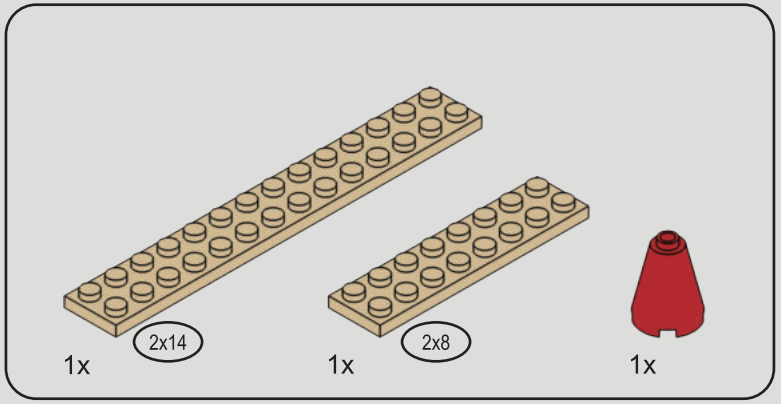

259

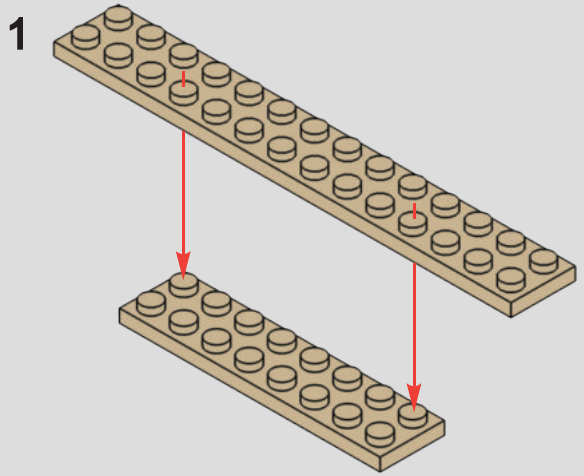

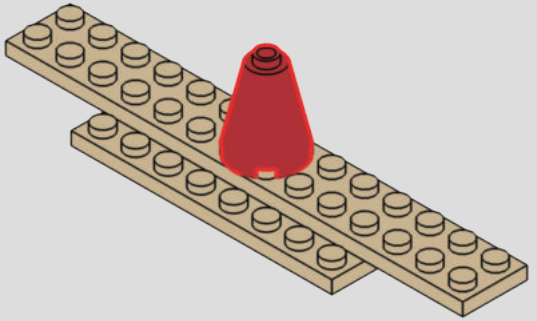

260

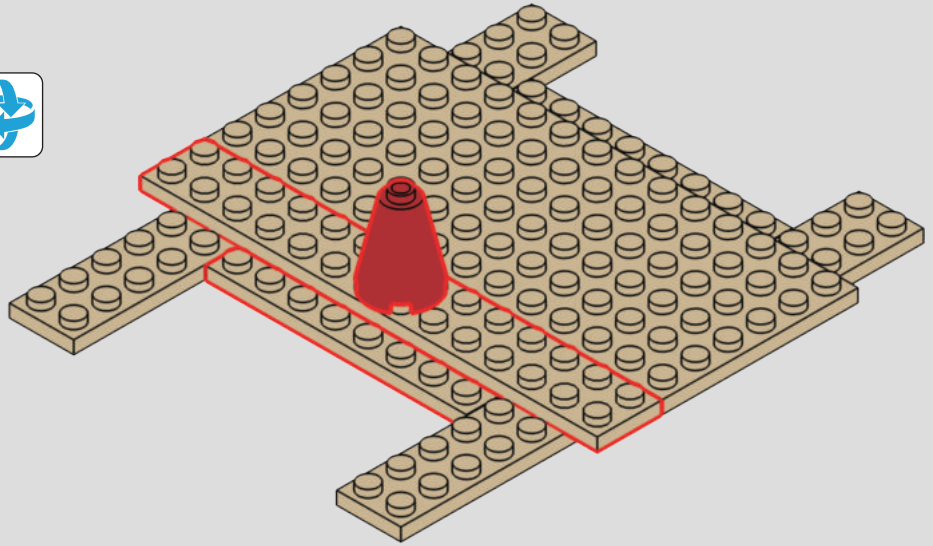

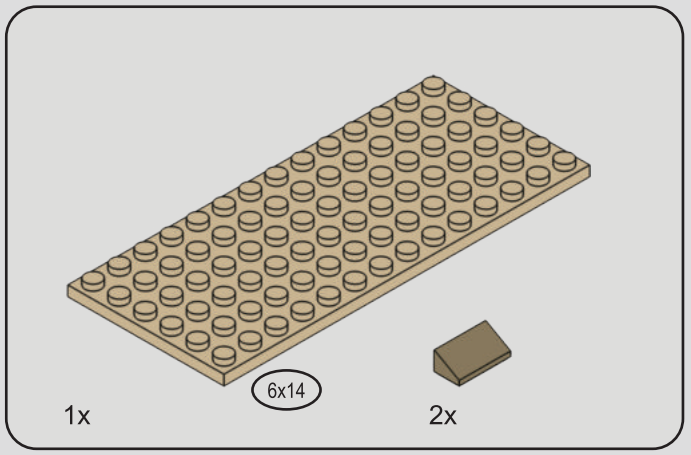

261

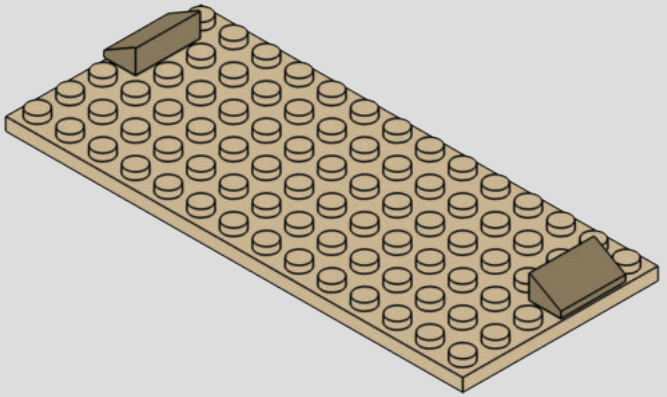

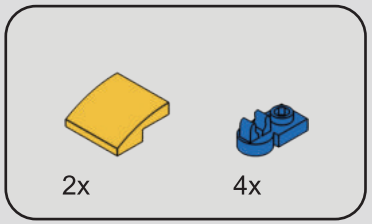

262

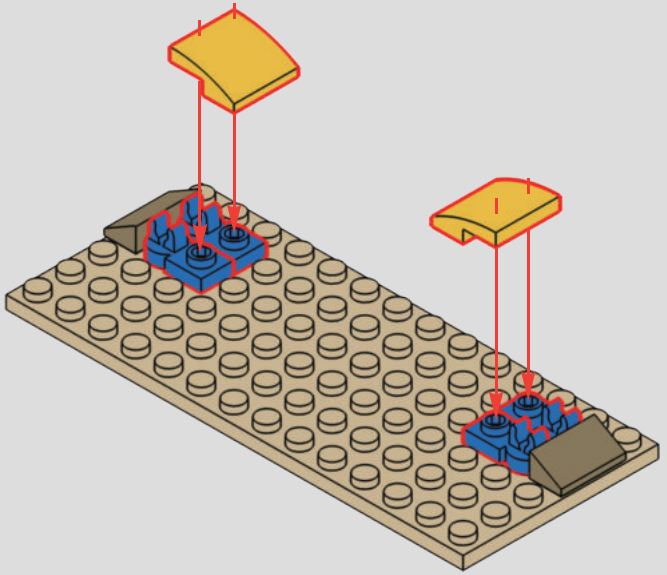

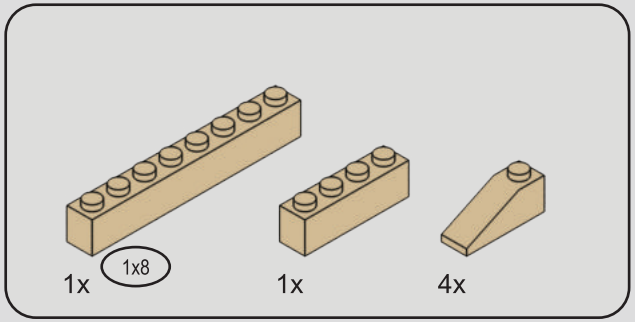

263

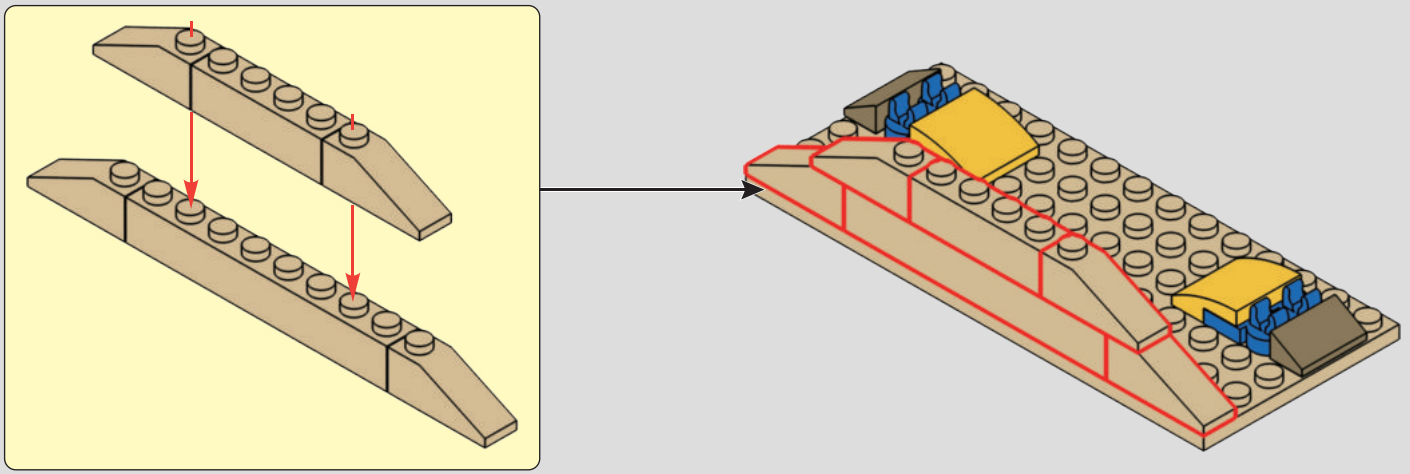

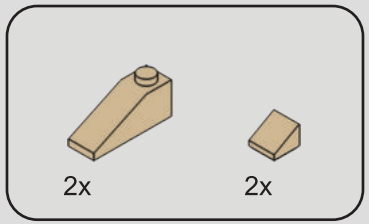

264

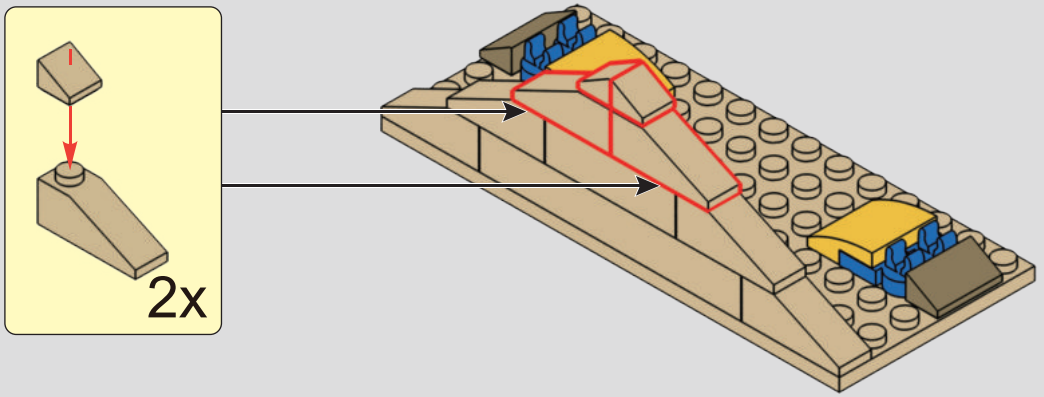

265

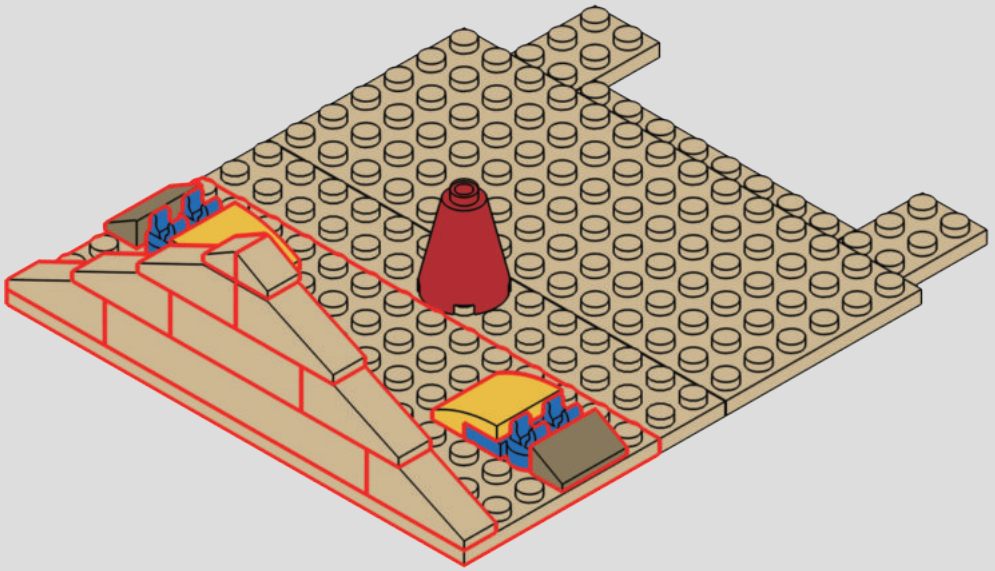

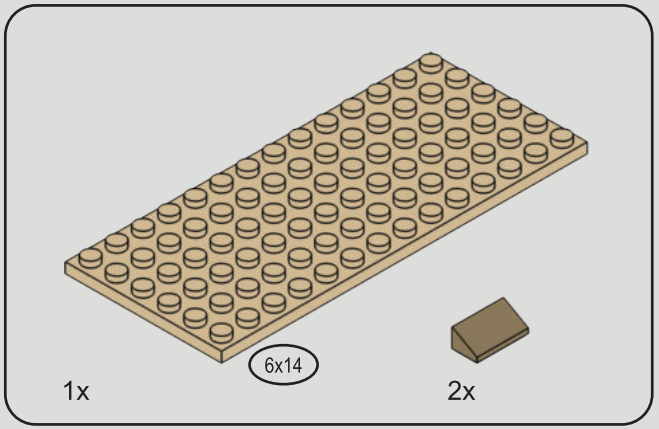

266

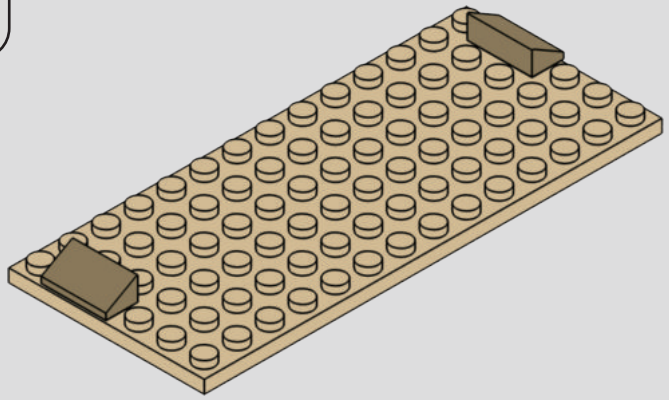

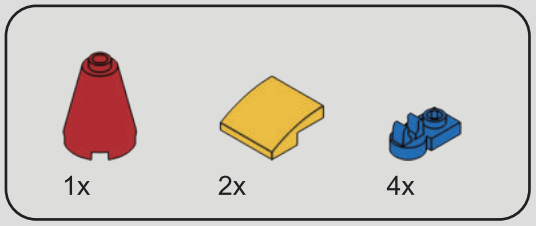

267

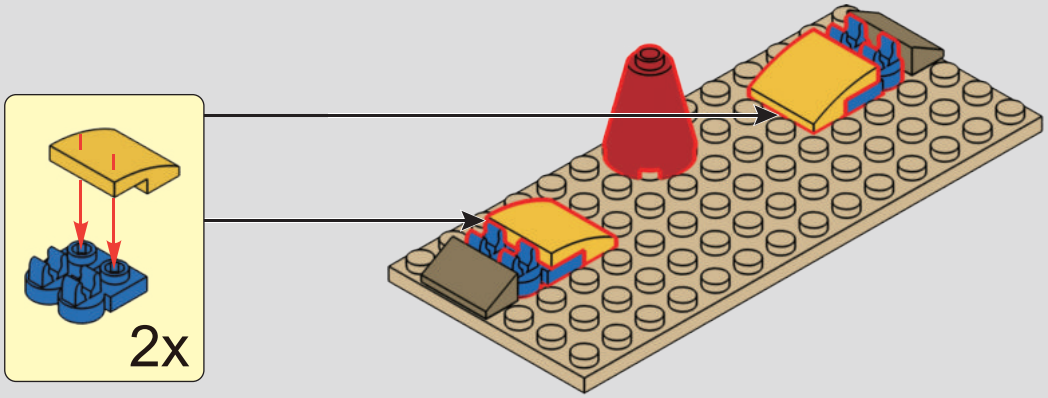

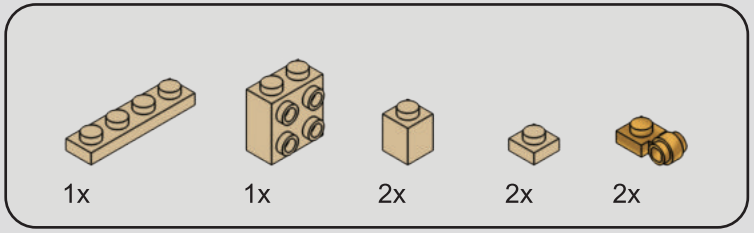

268

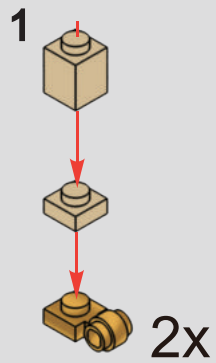

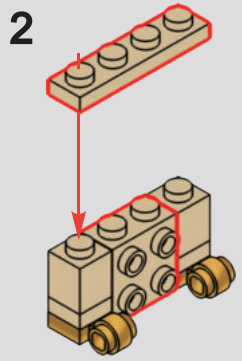

269

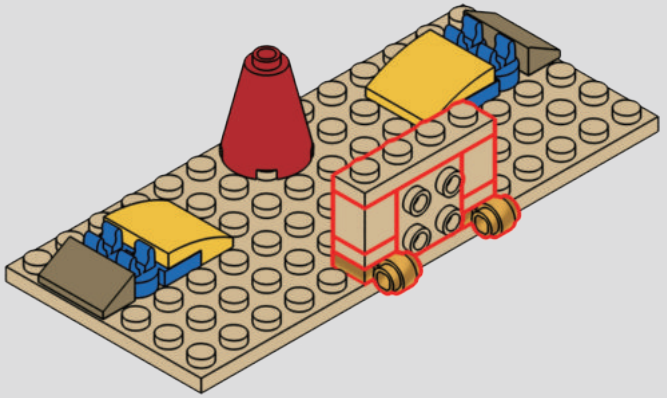

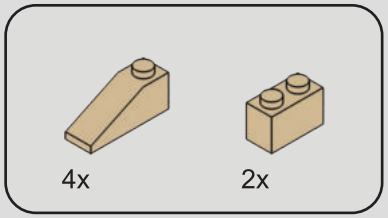

270

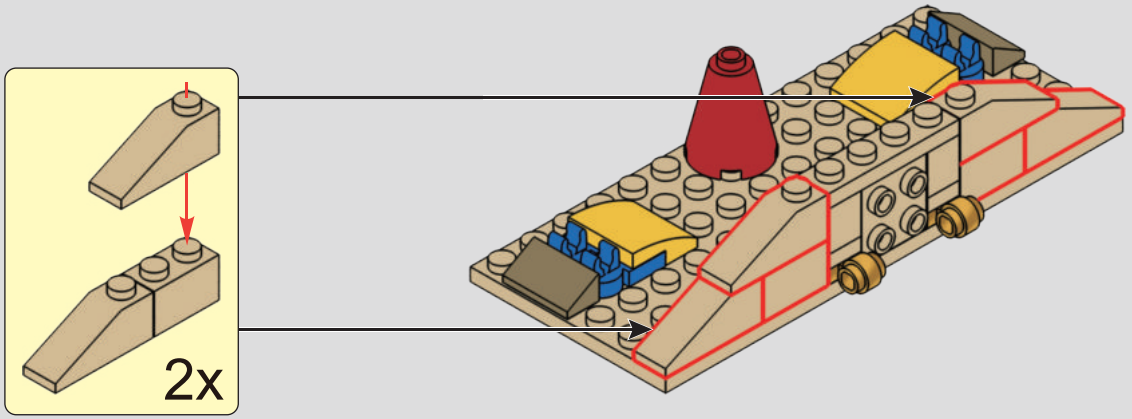

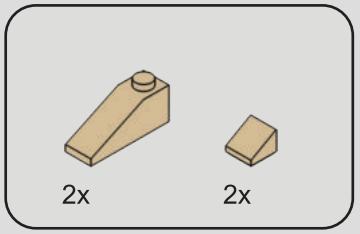

271

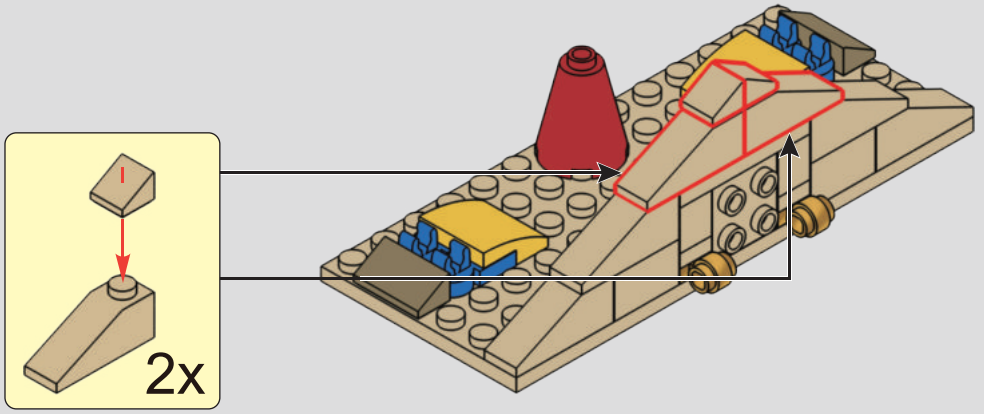

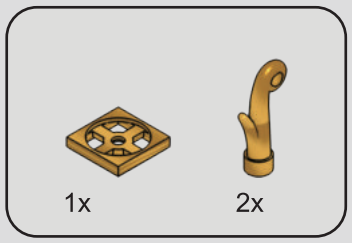

272

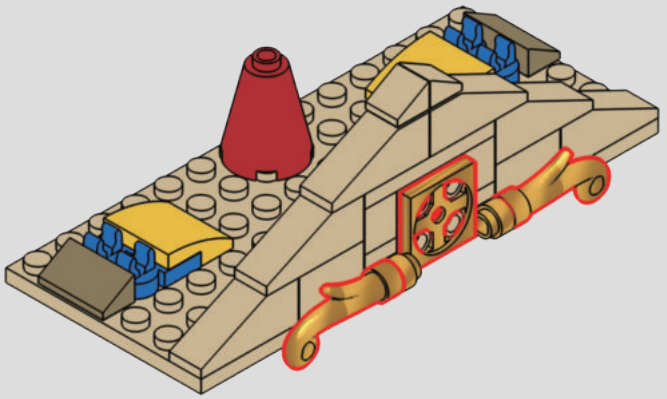

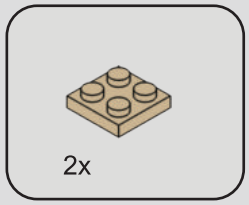

273

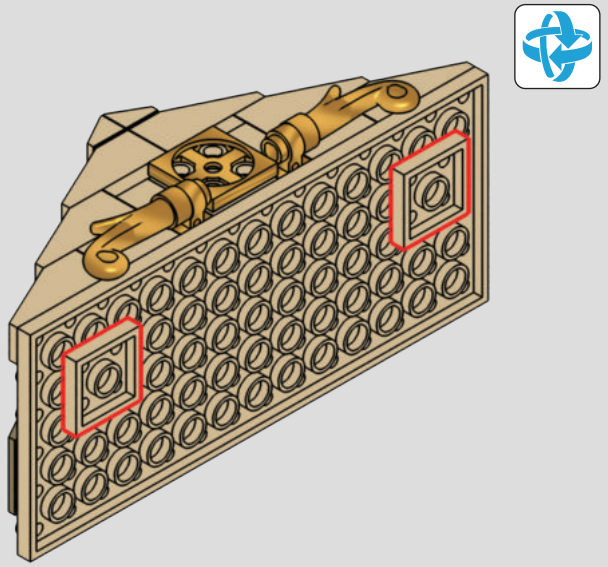

274

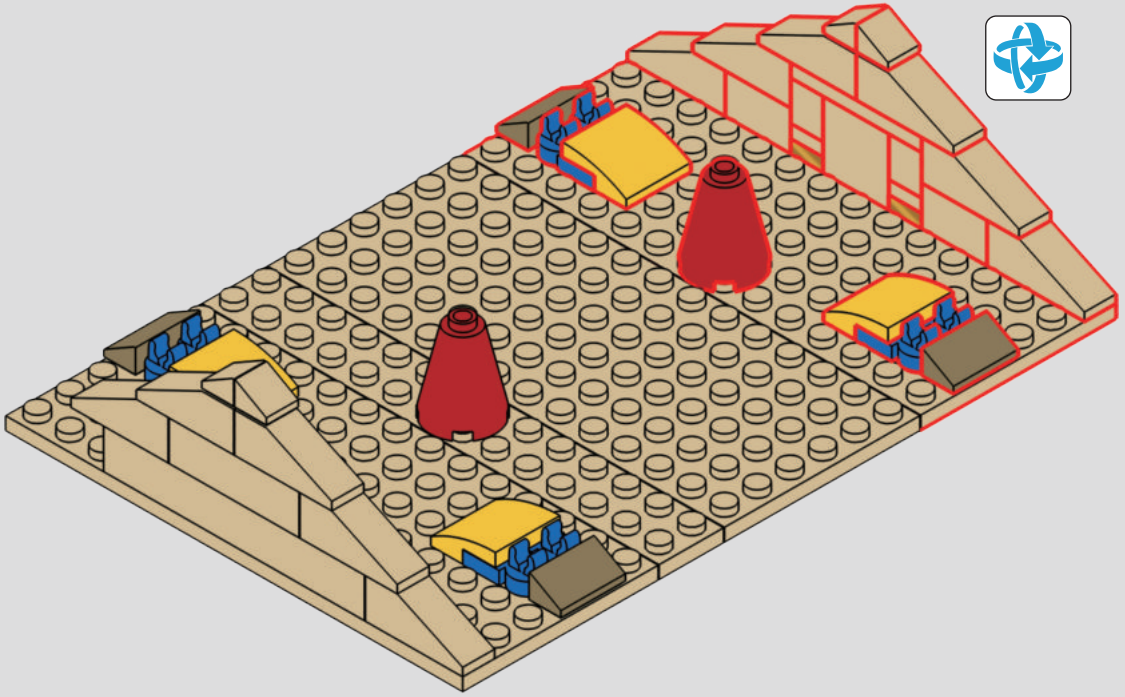

275



276



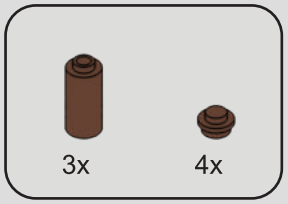

277

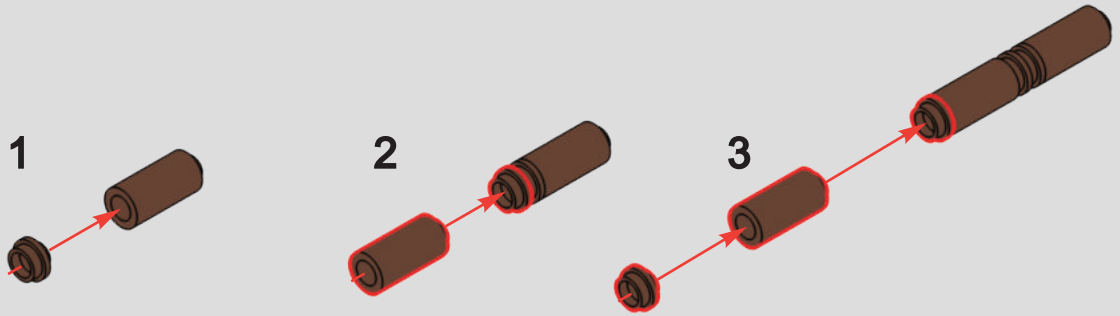

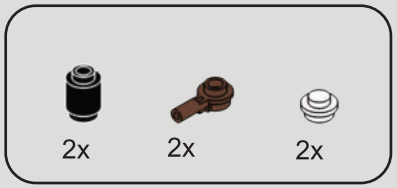

278

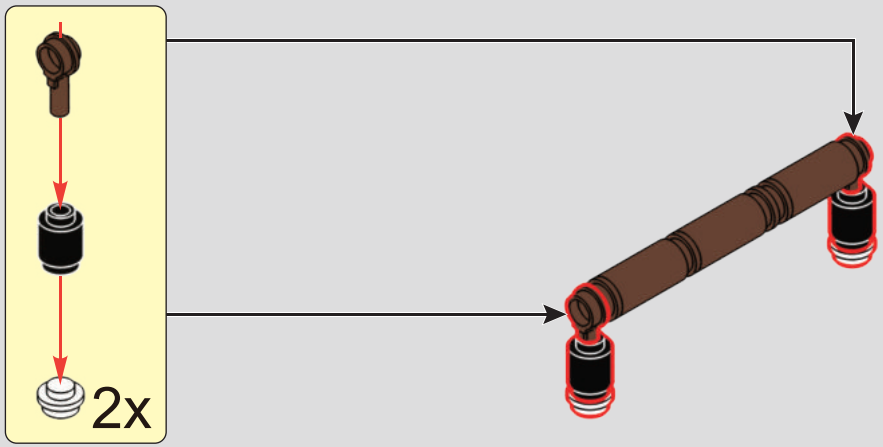

279



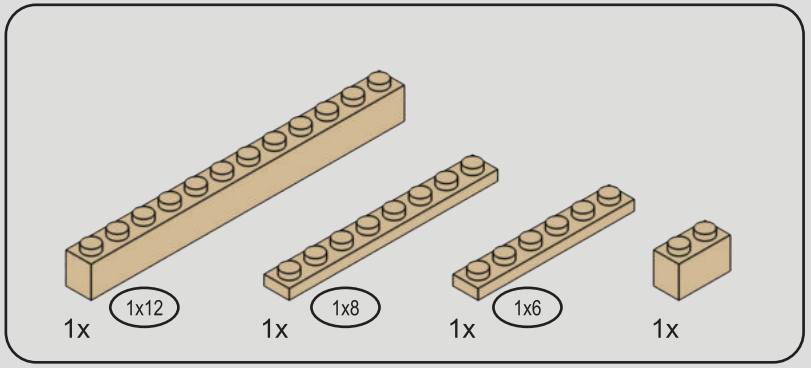

280

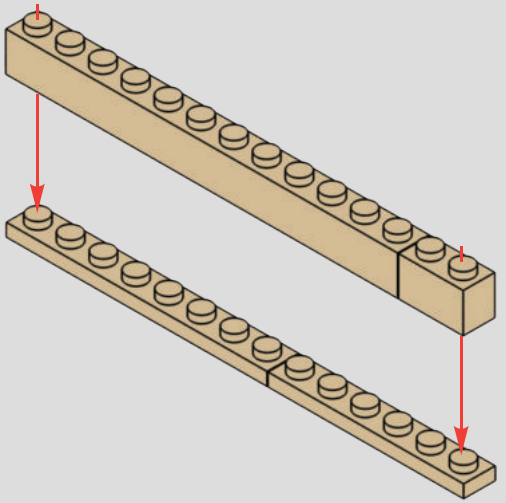

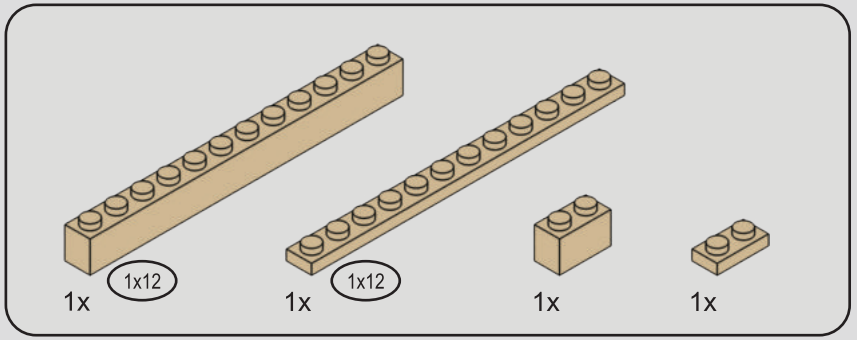

281

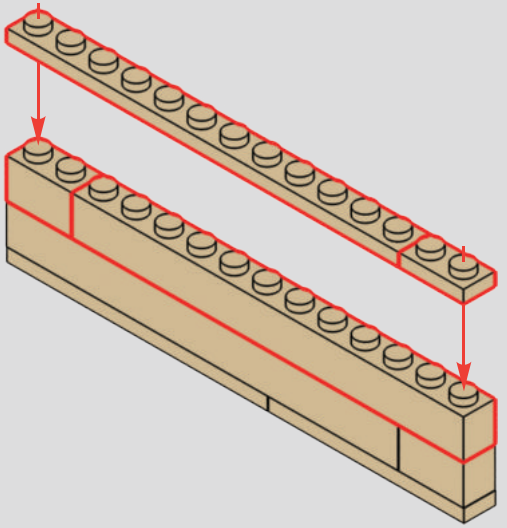

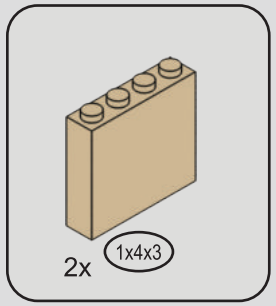

282

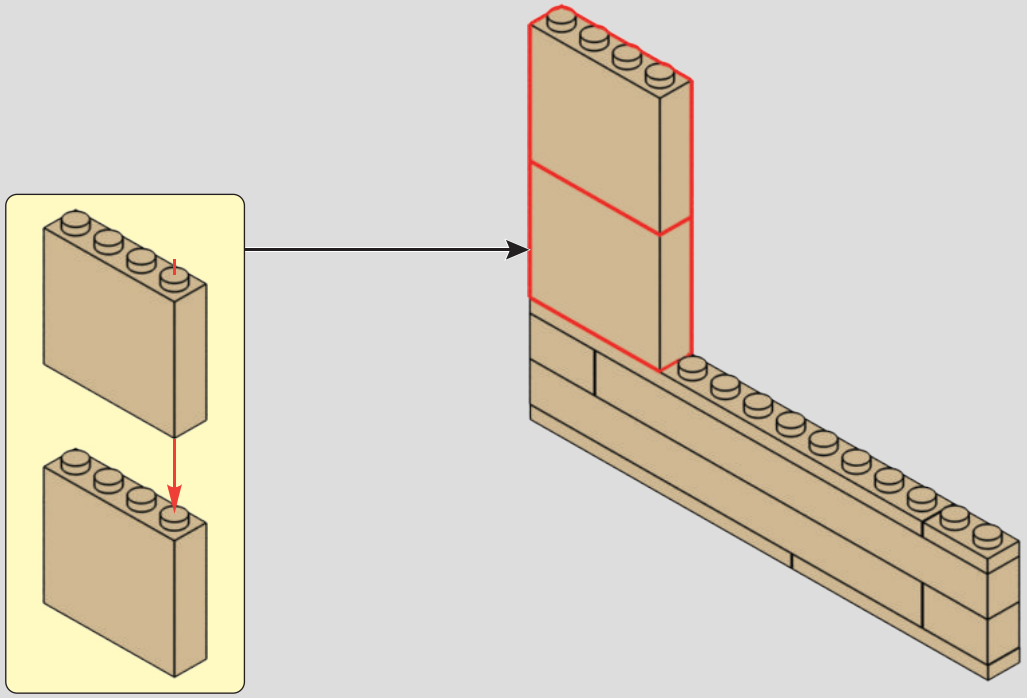

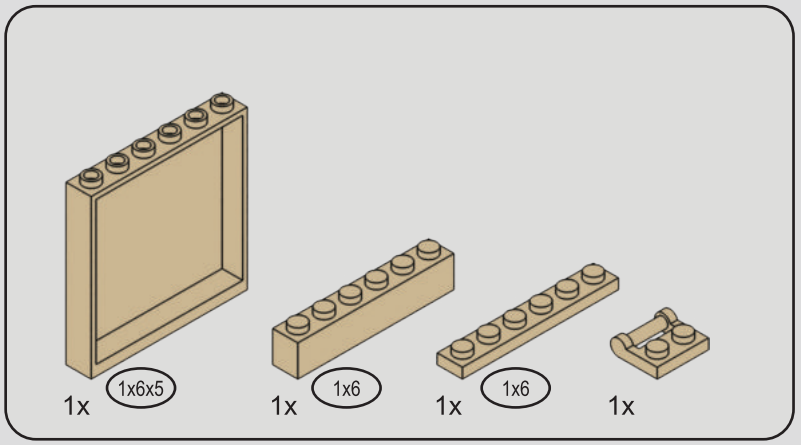

283

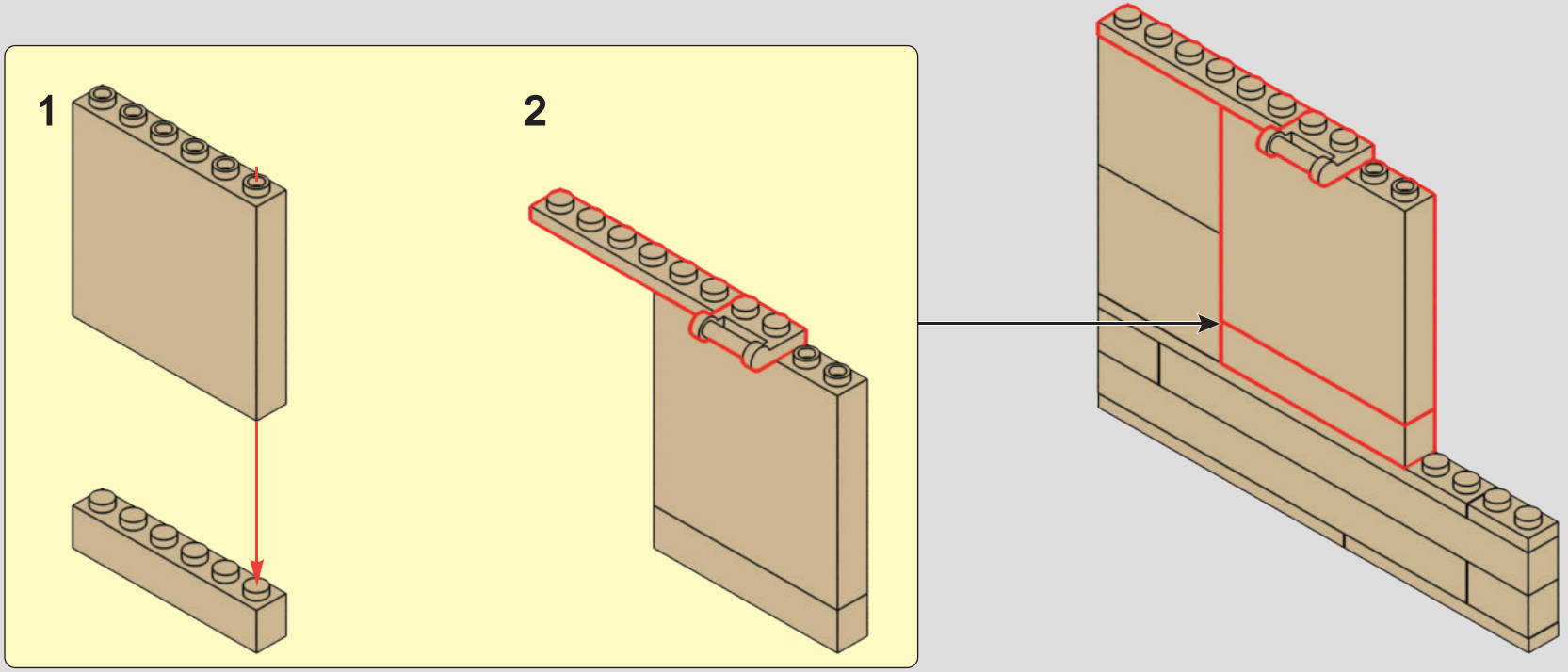

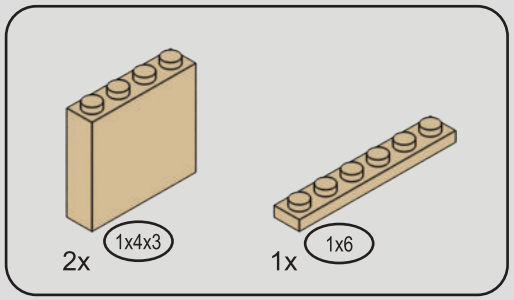

284

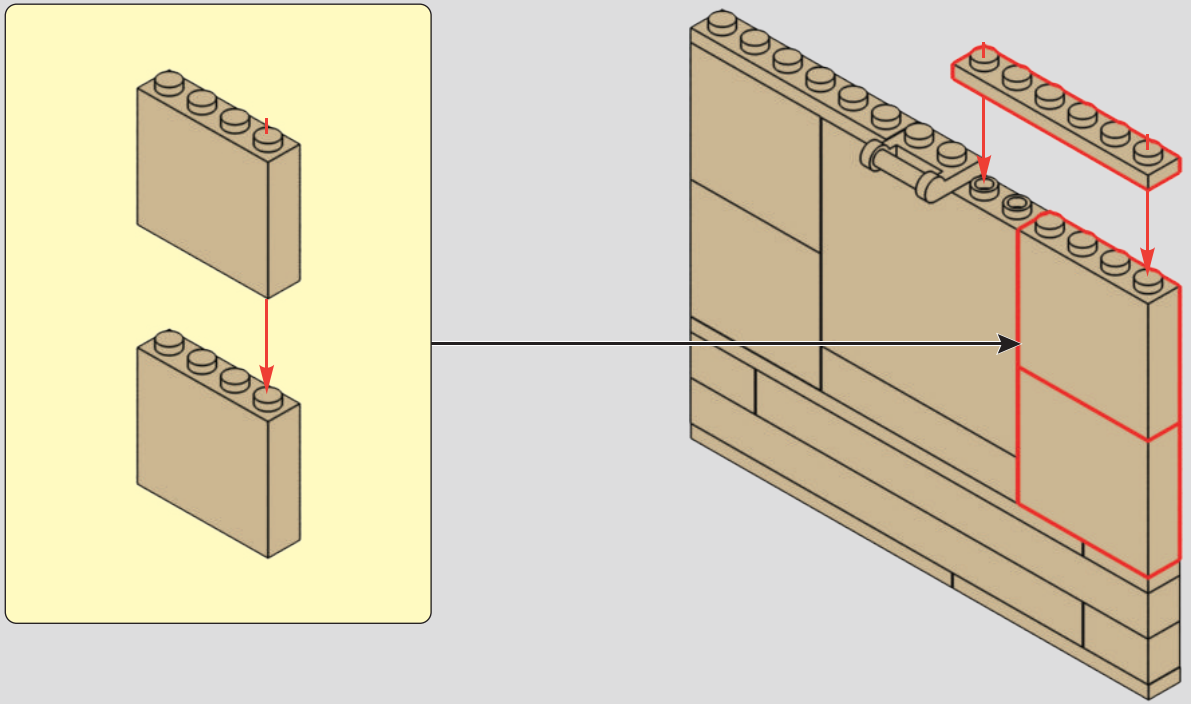

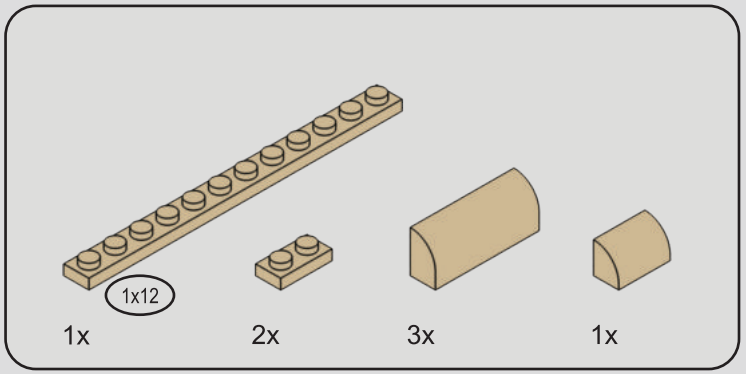

285

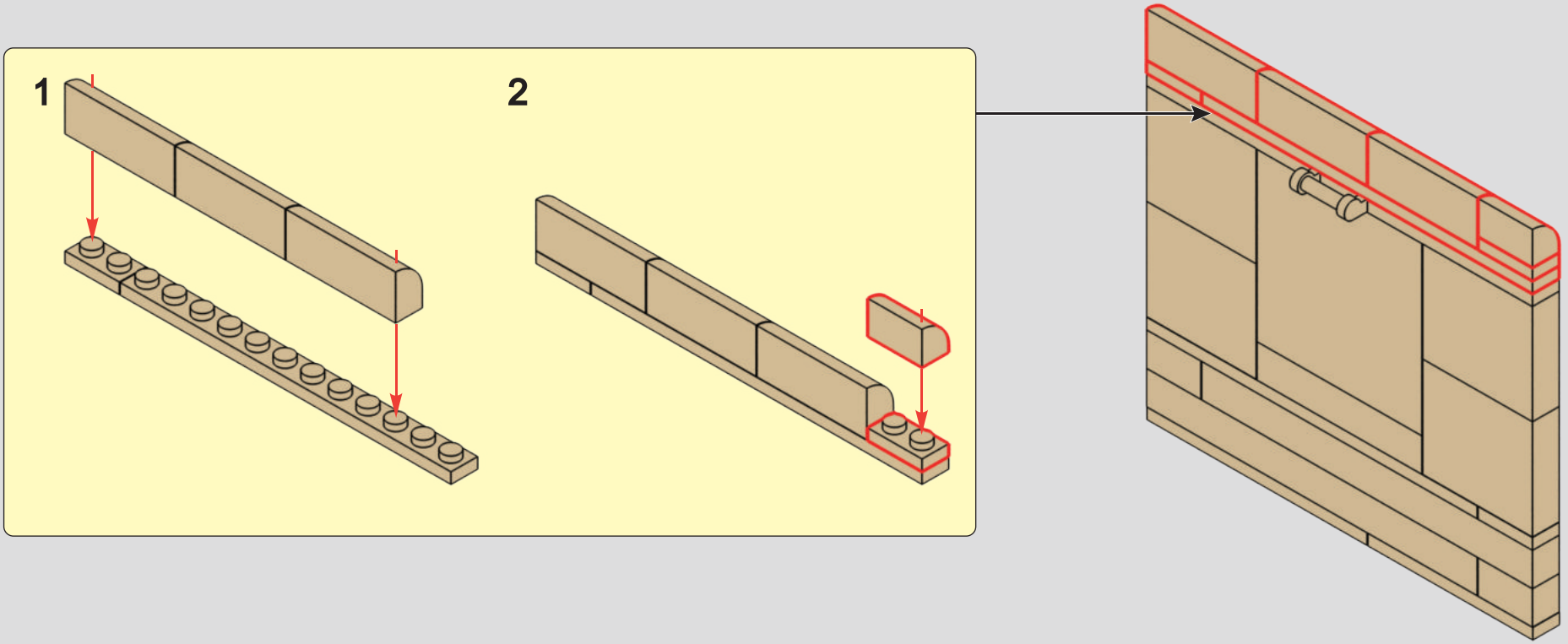

286

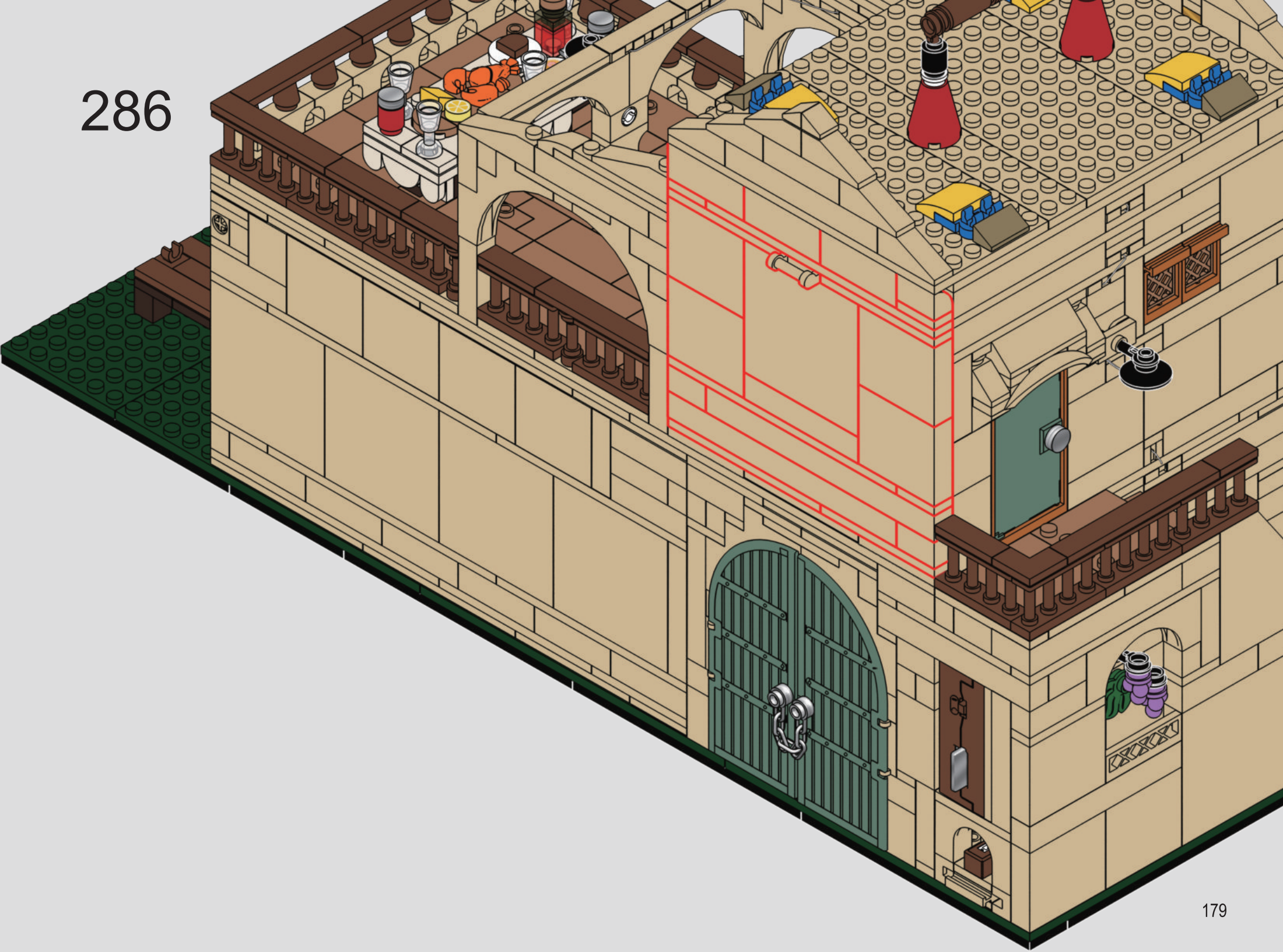


2x
3
4x
2x
4x
287
CELLAR
3
3


10

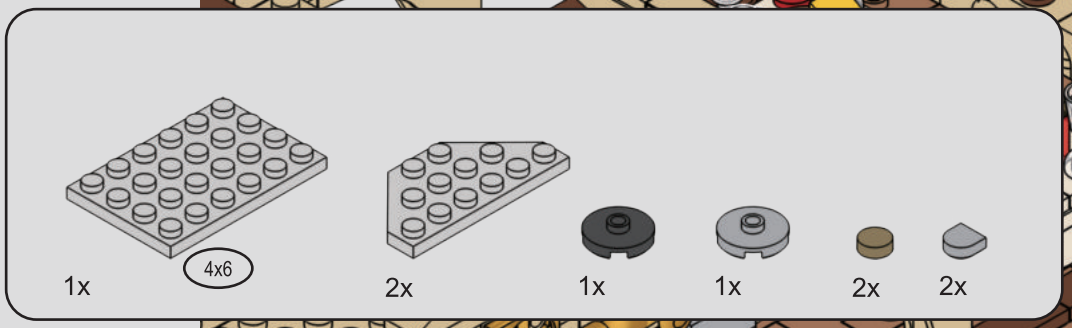

288

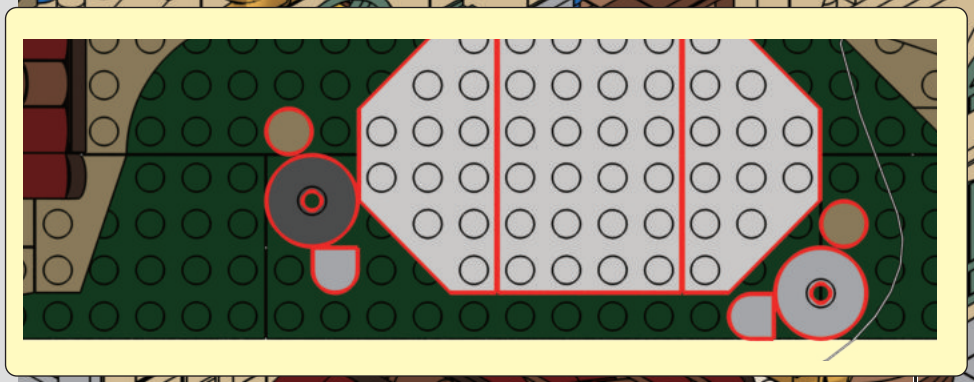

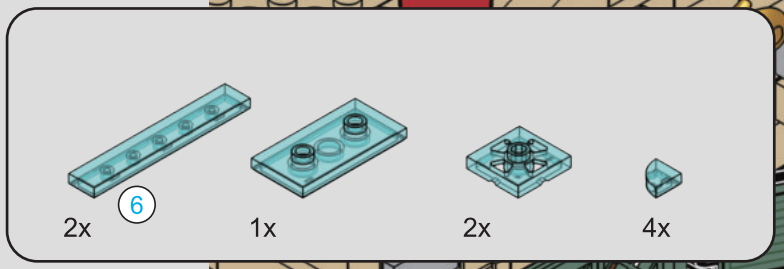

289



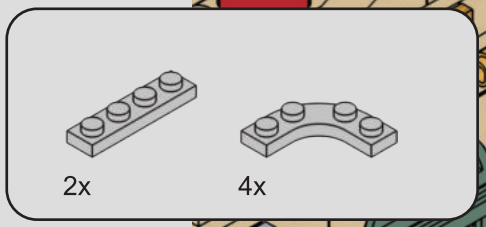

290

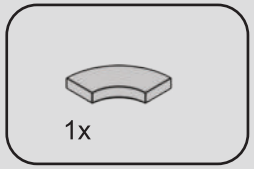

291

1

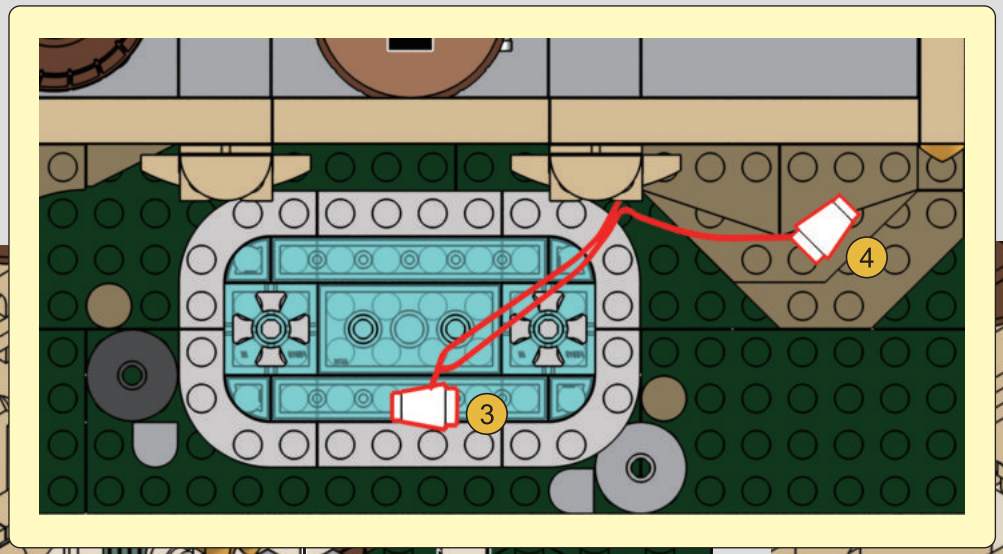



2




CELLAR
3

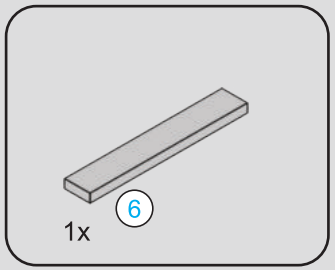

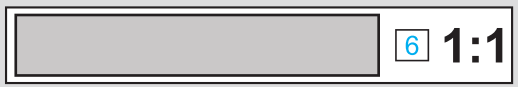

293

1



2





294



295



296

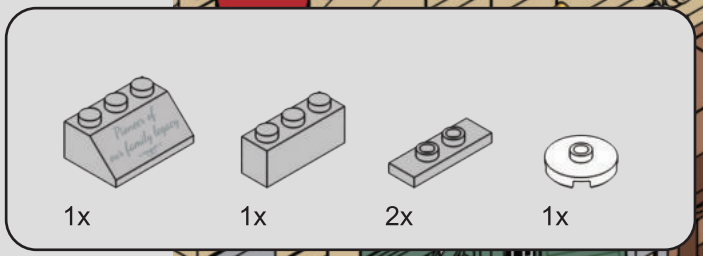

297

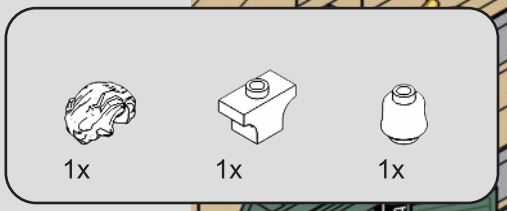

298



299

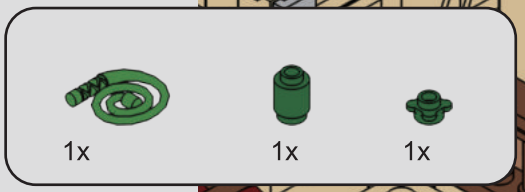

300



301



302

1



2



1x 1x

303

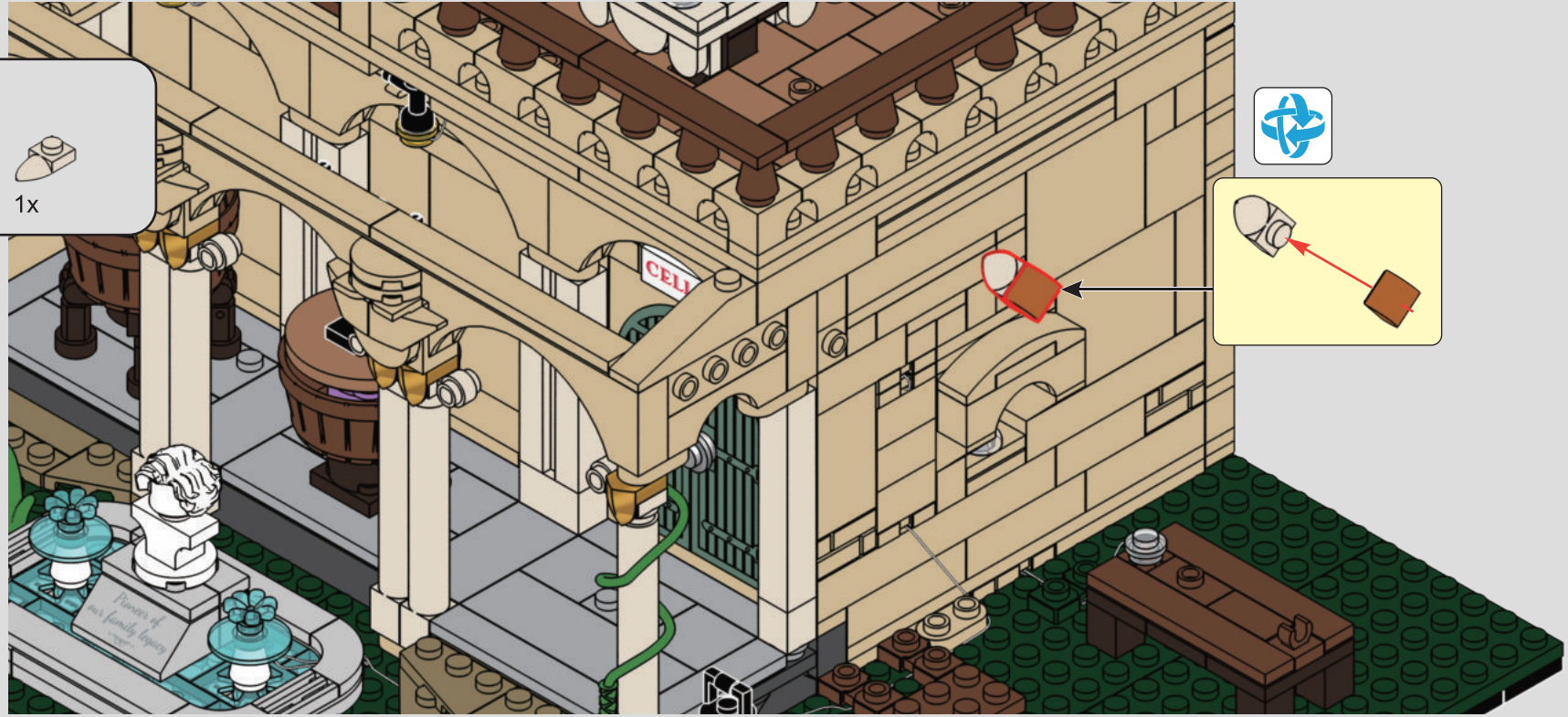

1x 1x 1x 1x 1x

304



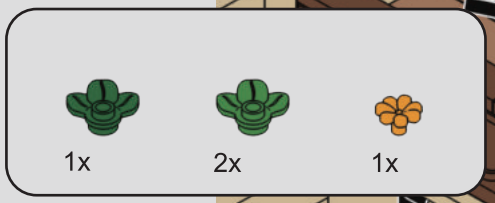

305

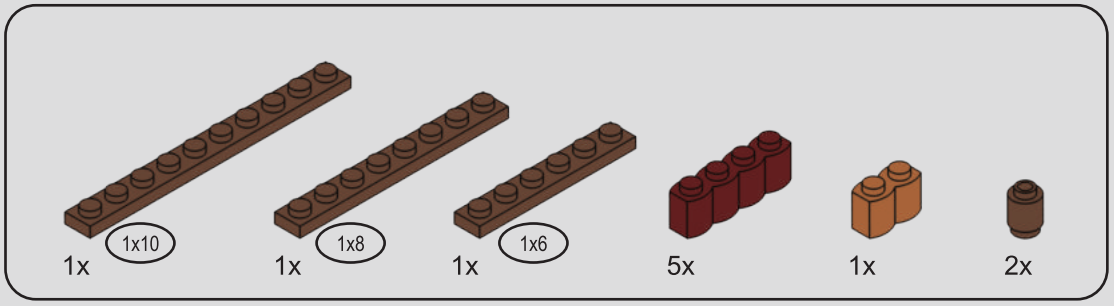

306

1

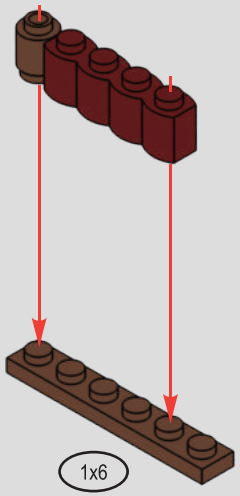

2

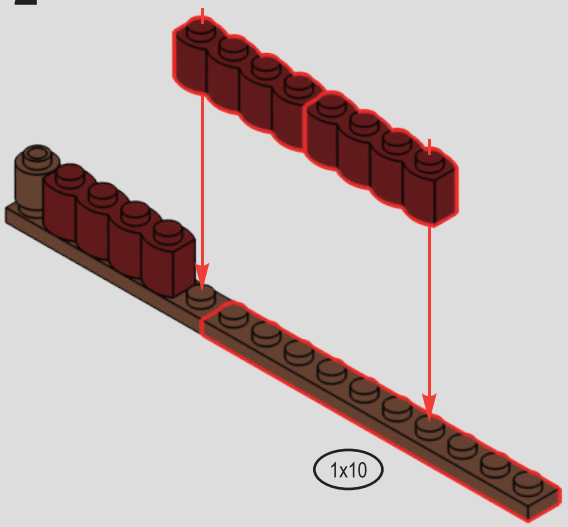

3

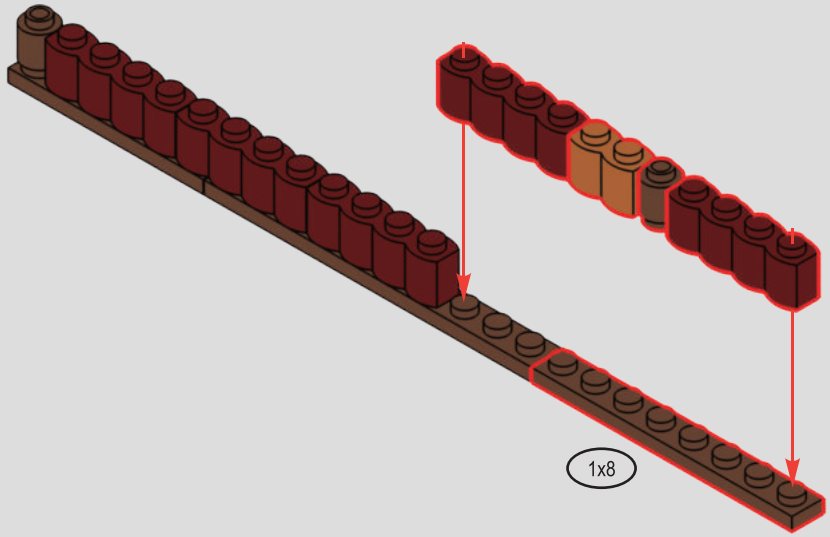

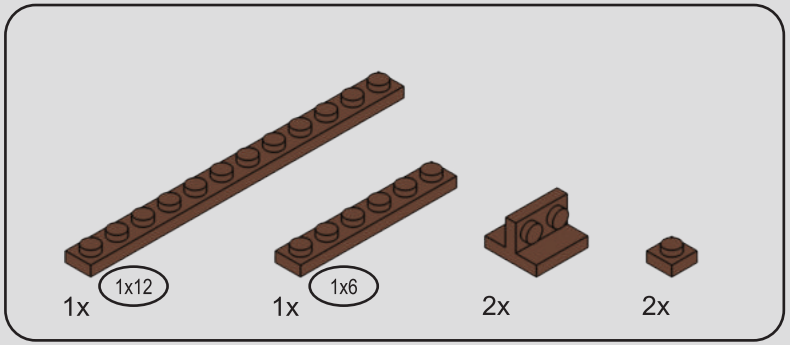

307

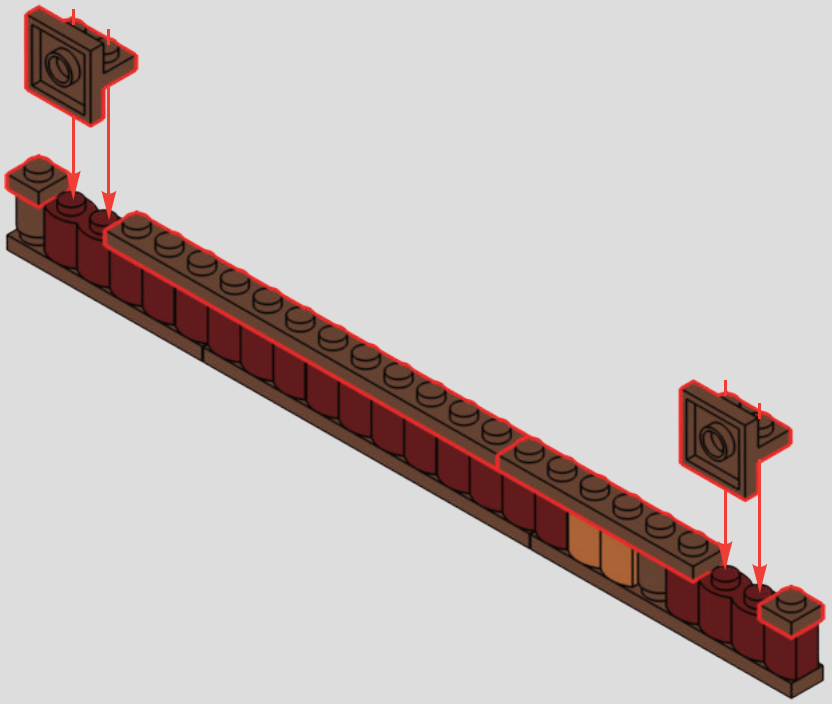

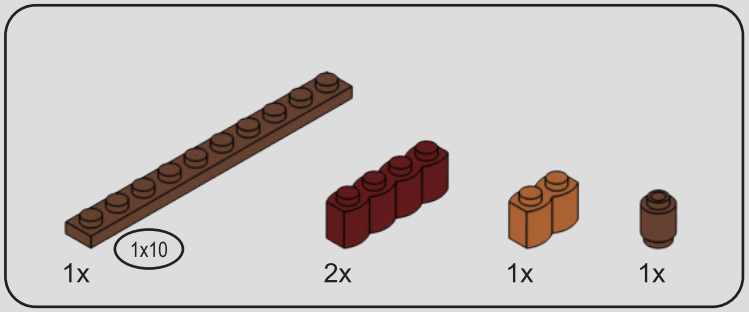

308

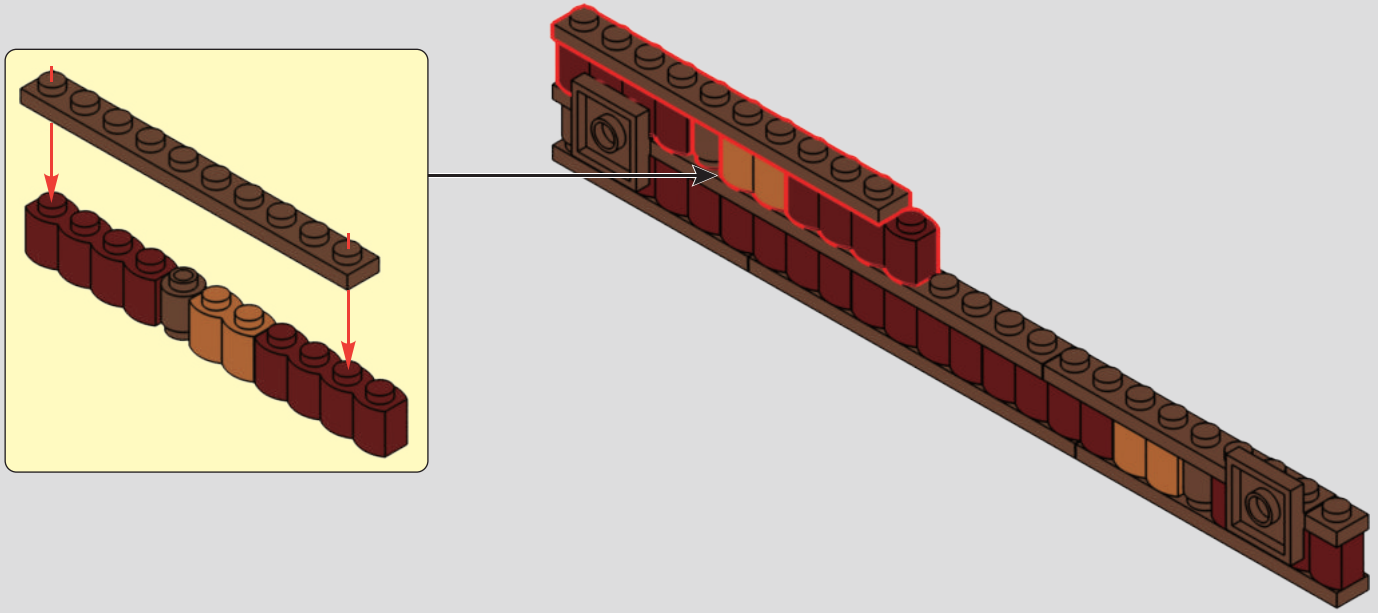

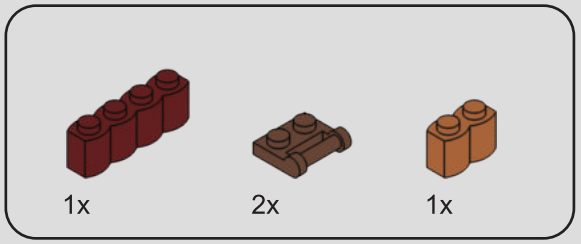

309

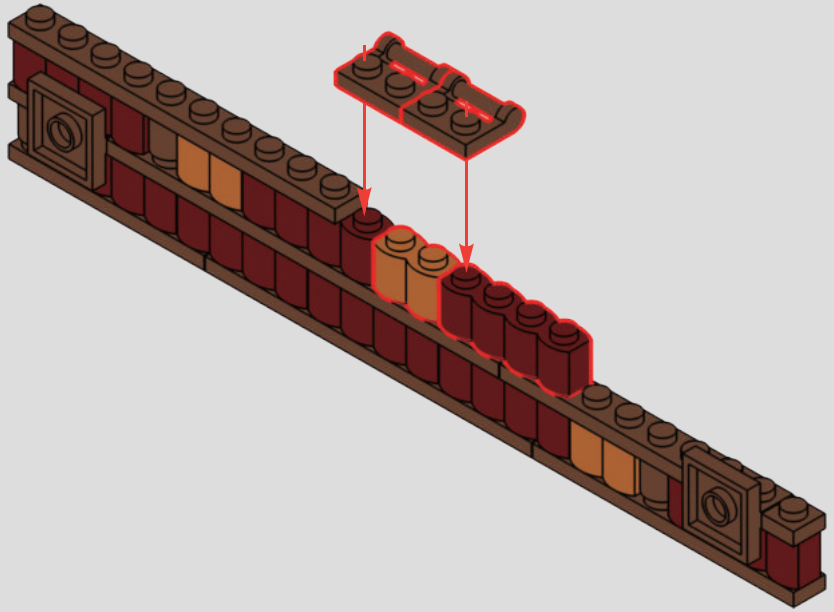

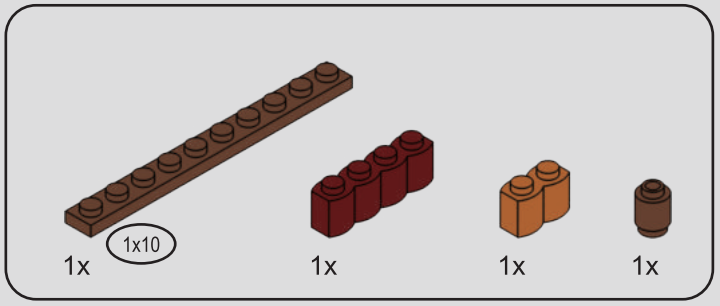

310

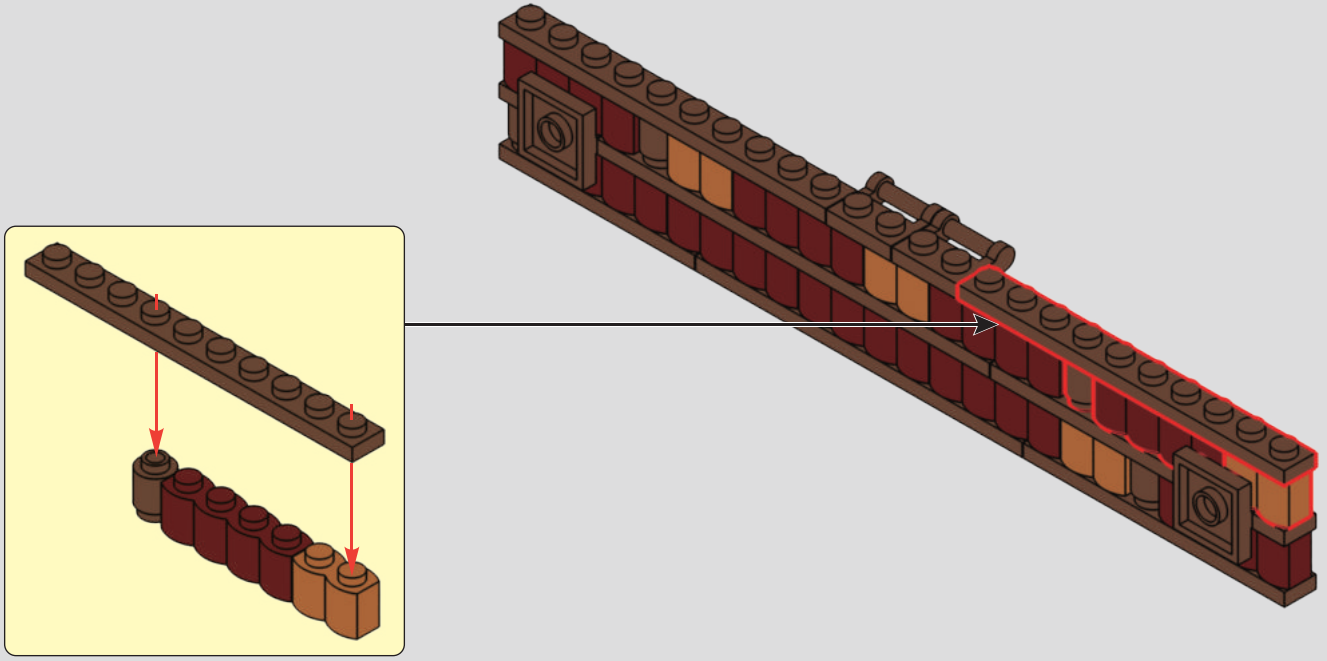

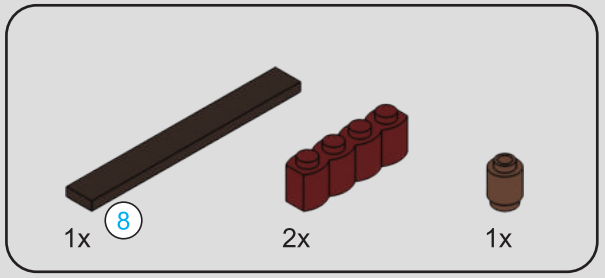



311

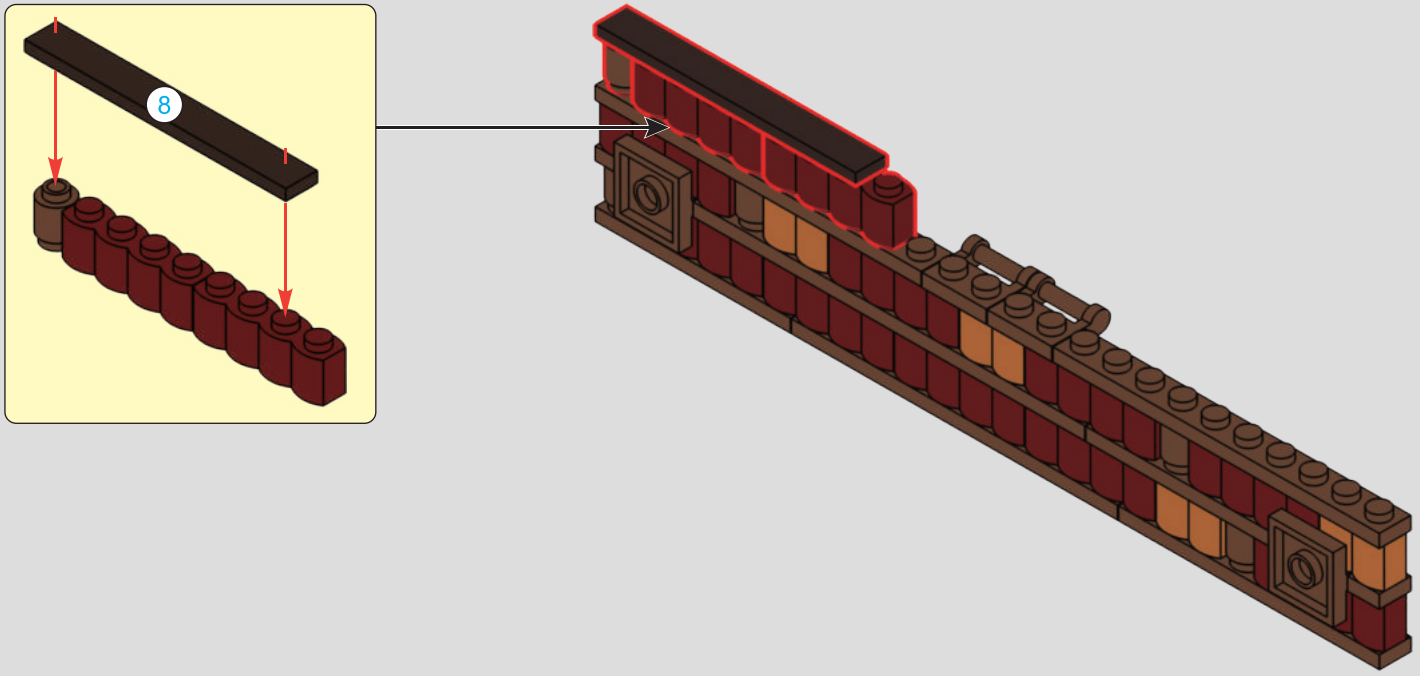

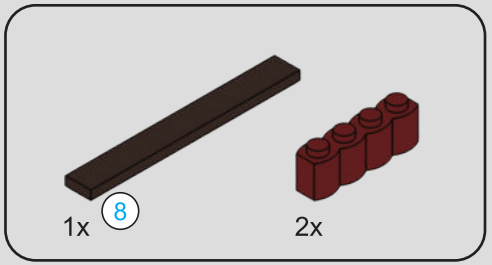



312

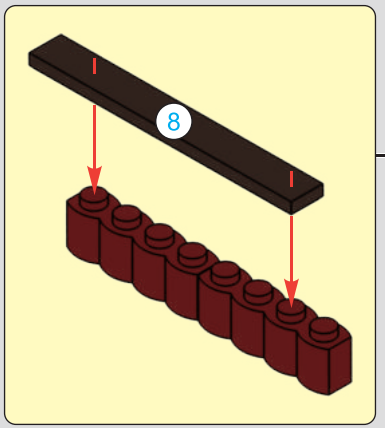

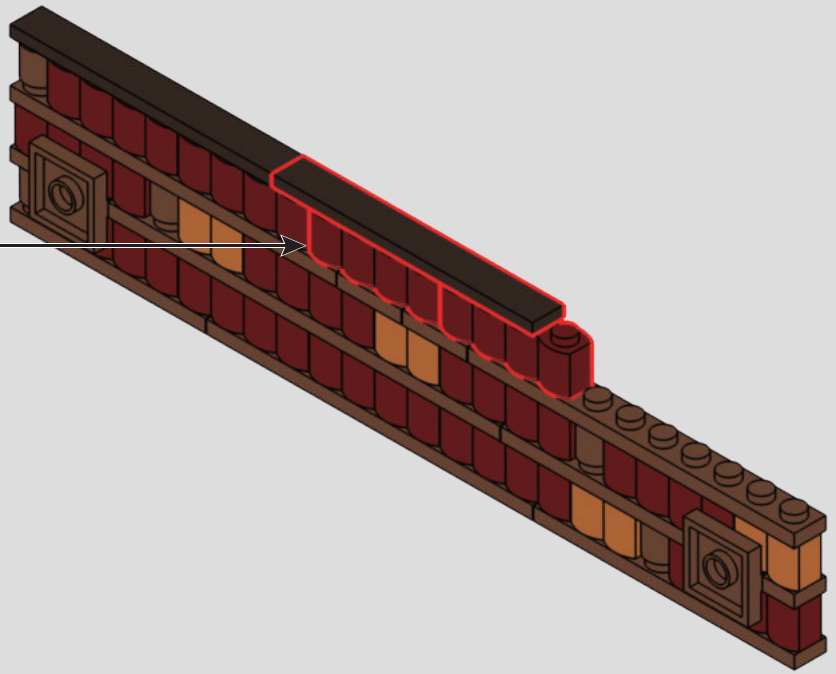

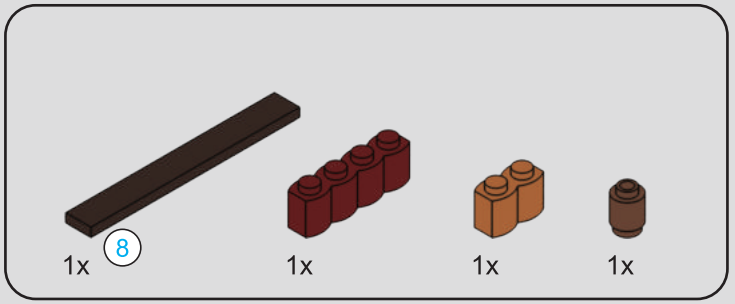



313

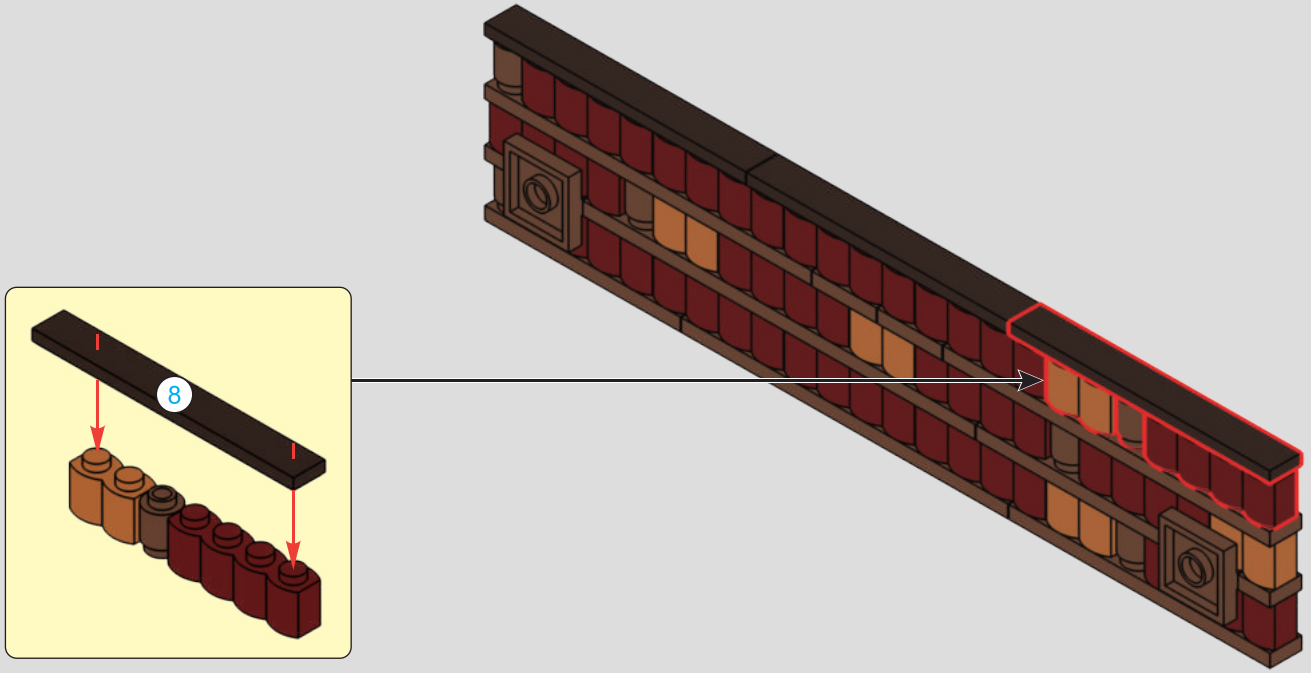

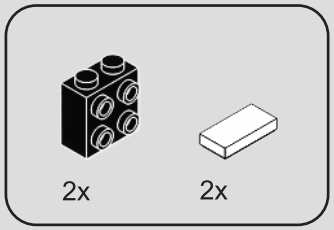

314

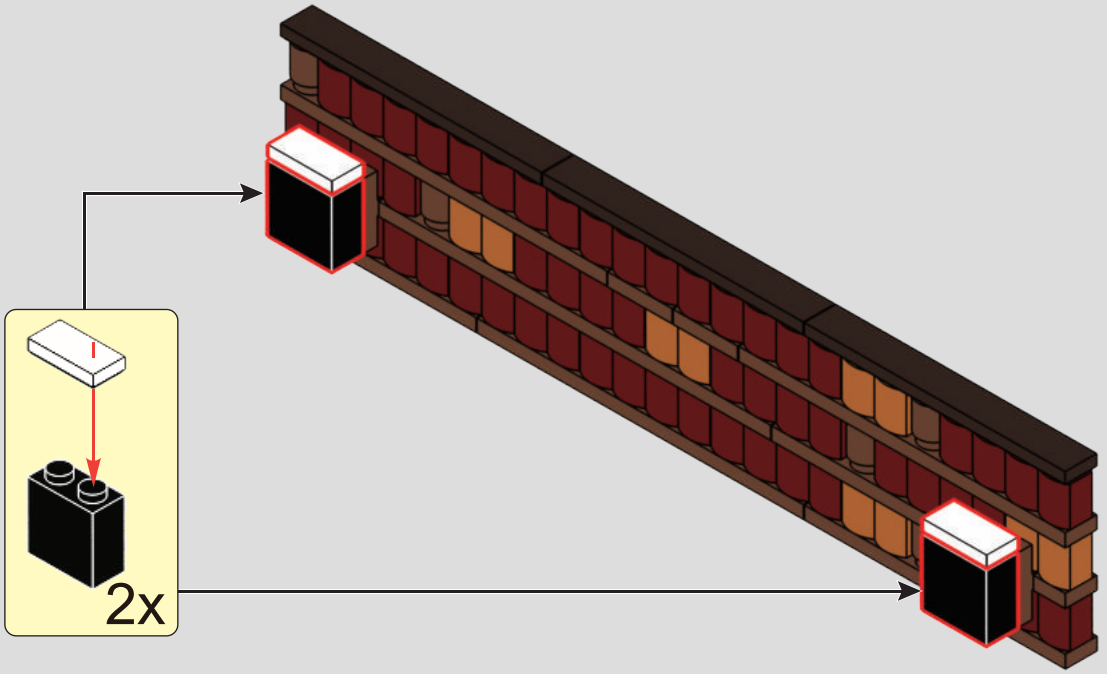

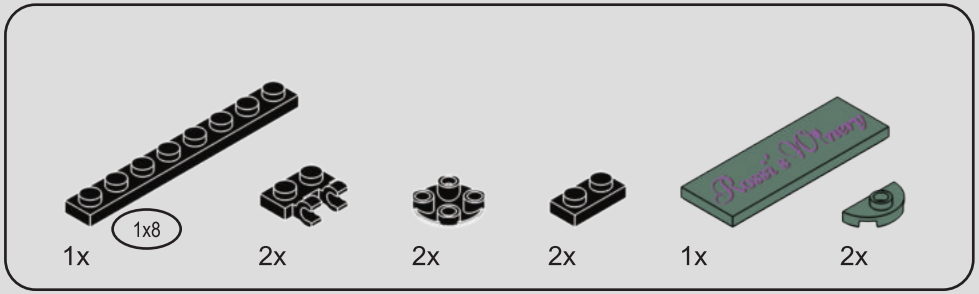

315

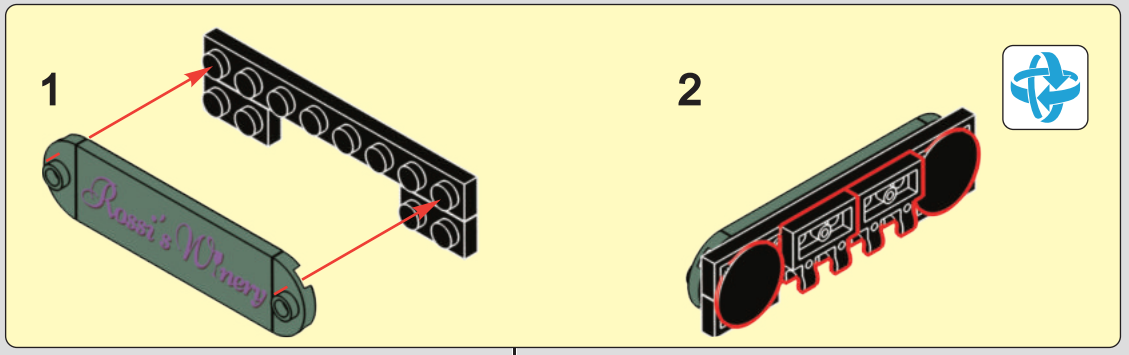



316




1x
1x
2x
1x
1x
317
Rossi's Winery

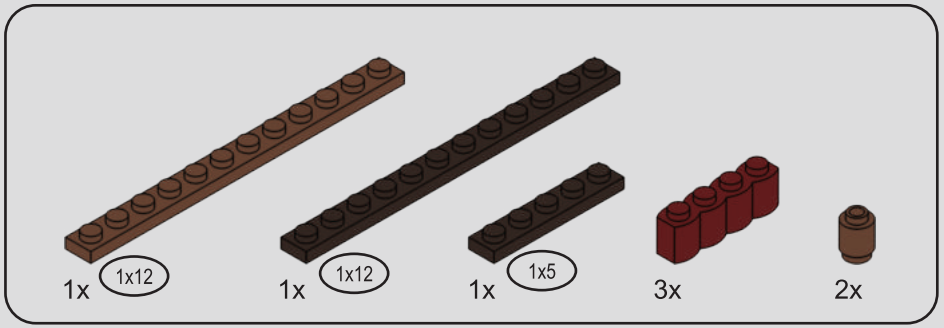

318

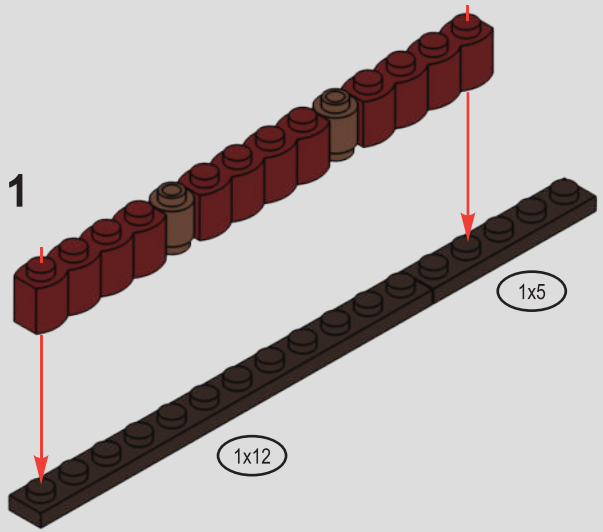

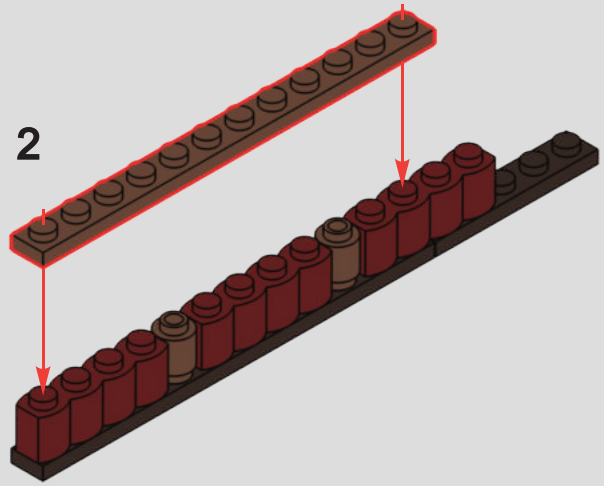

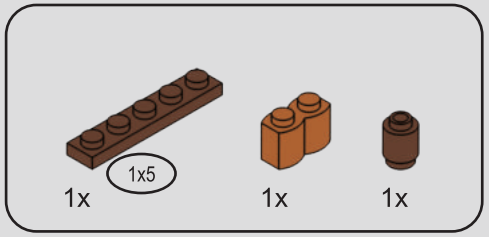

319

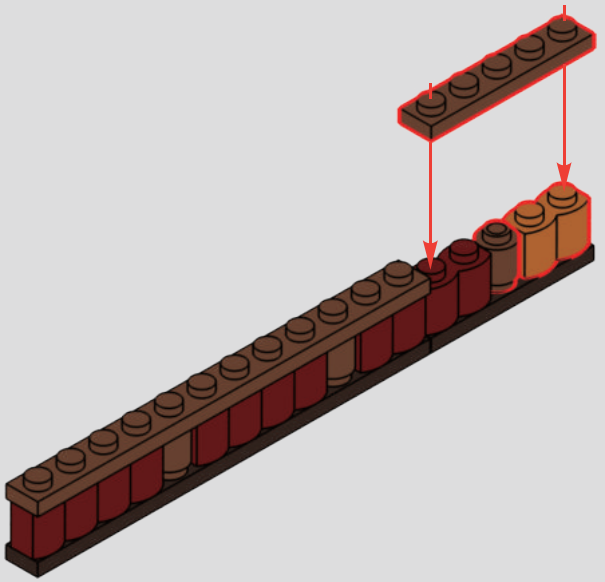

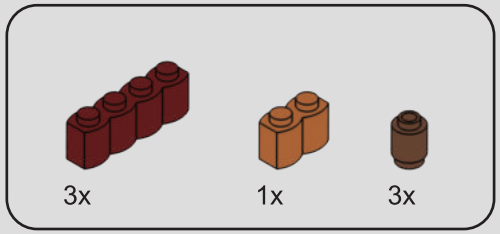

320

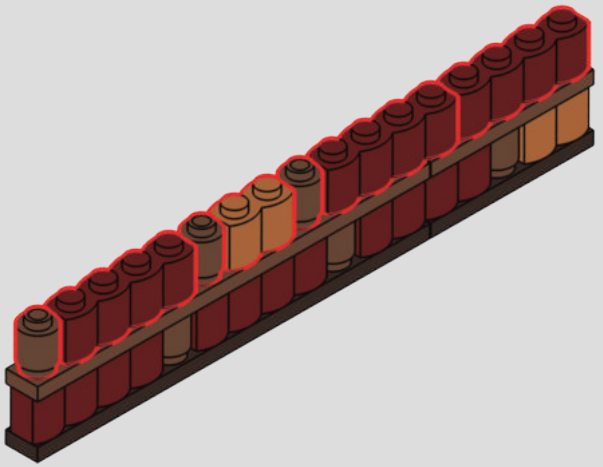

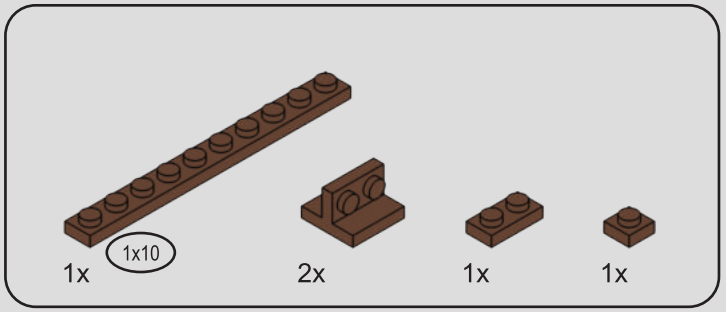

321

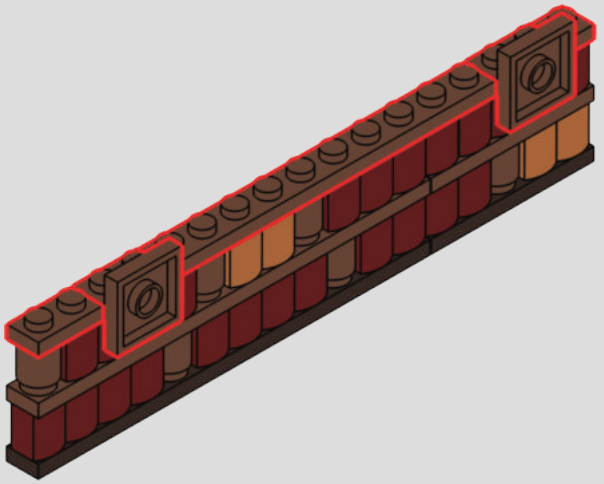

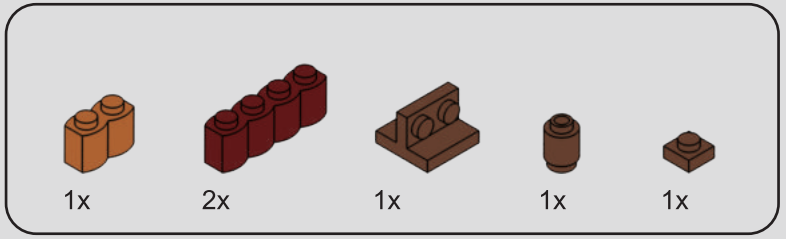

322

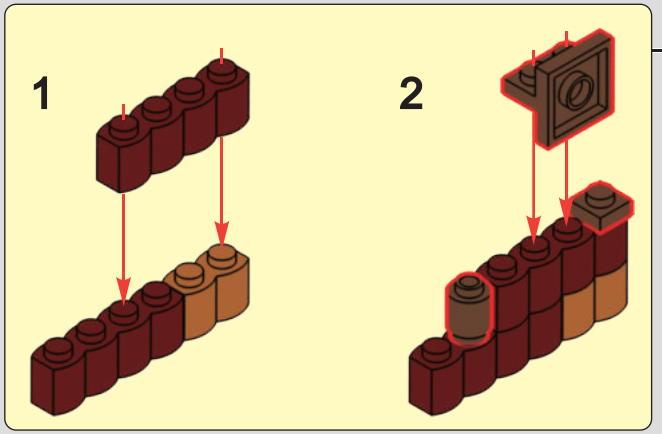

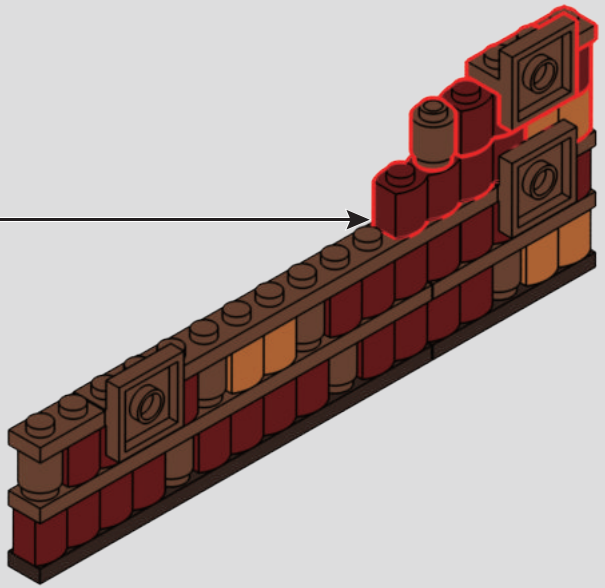

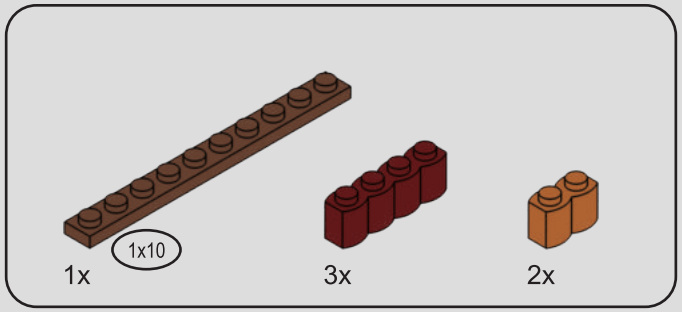

323

1

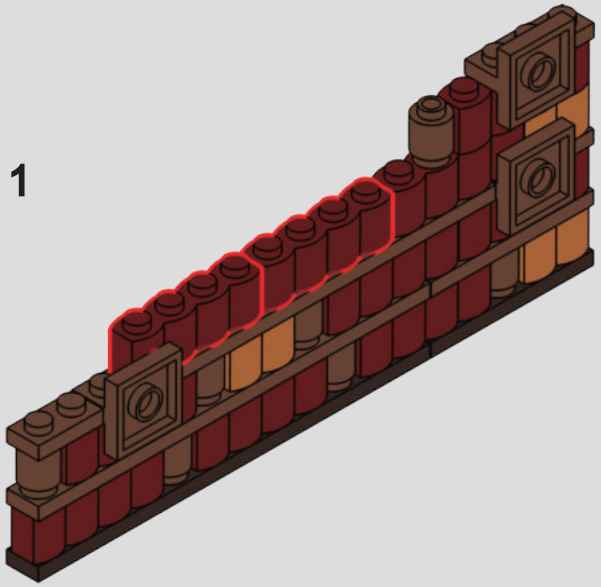

2

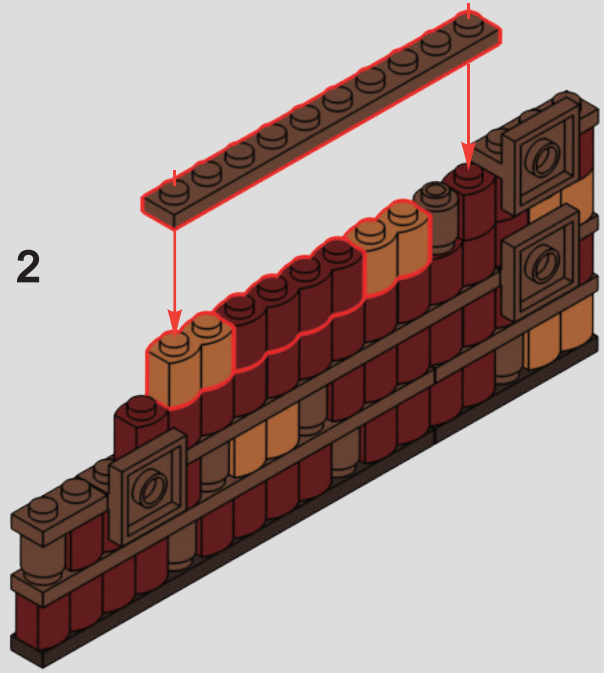

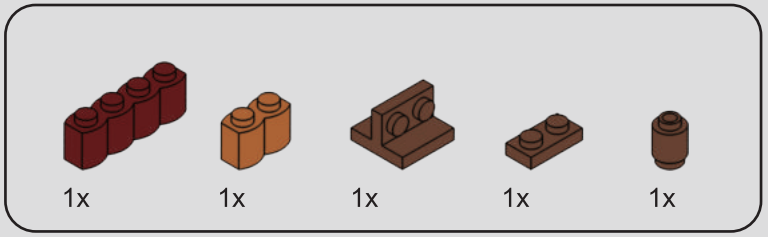

324

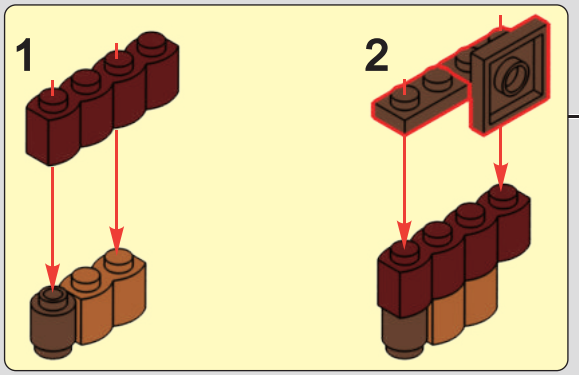

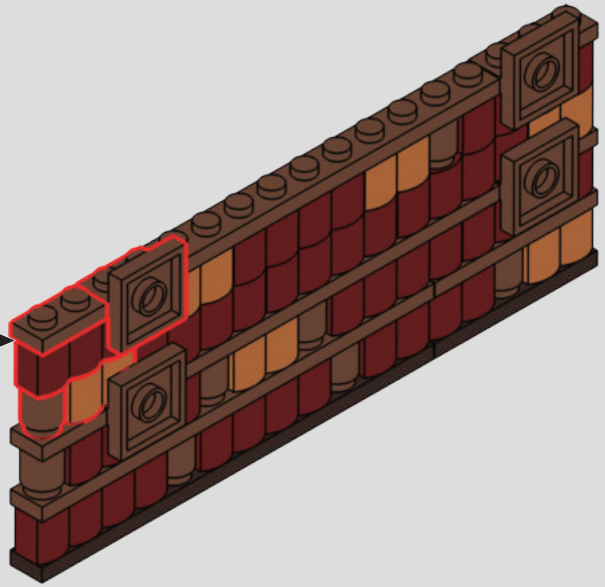

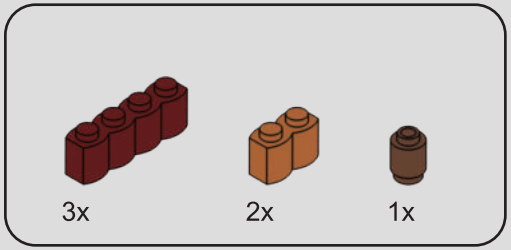

325

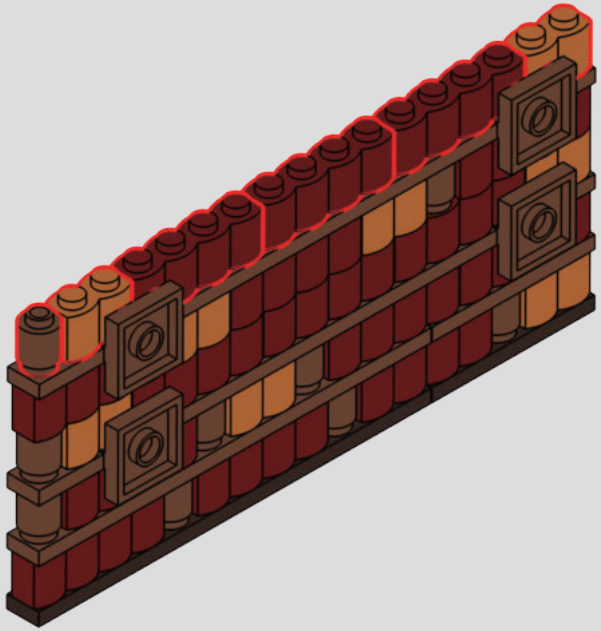

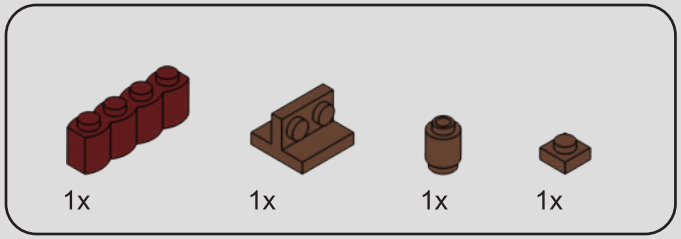

326

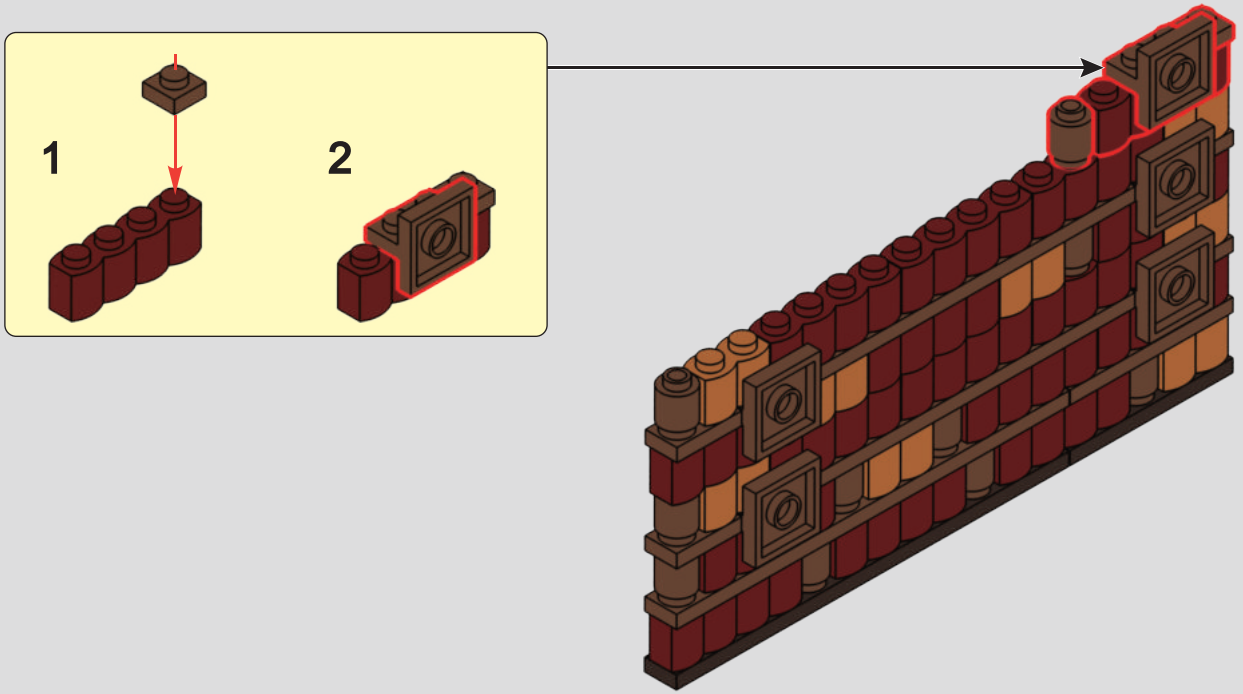

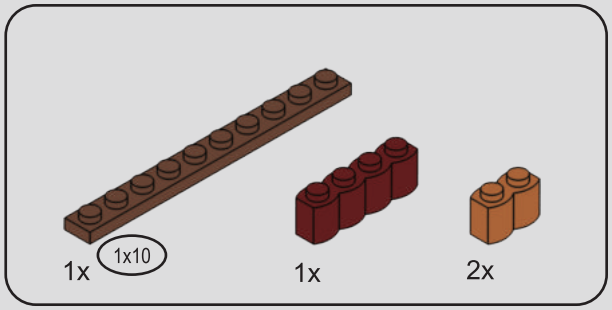

327

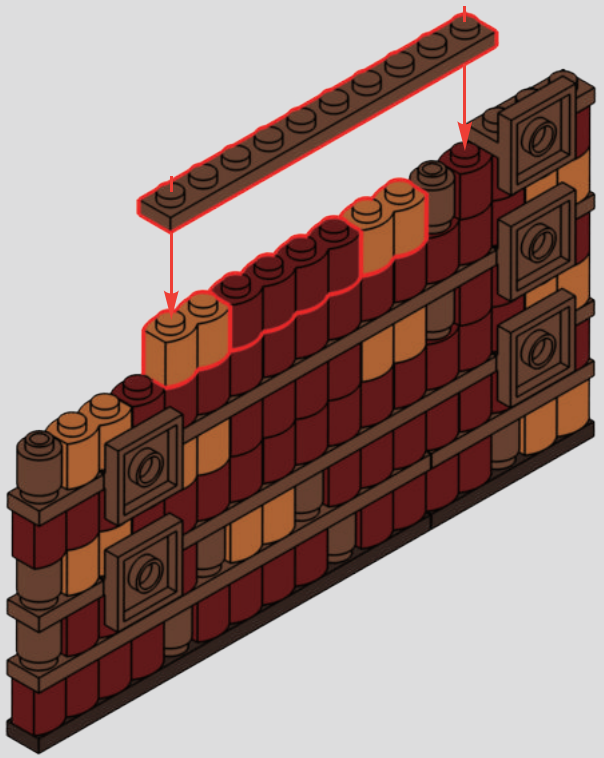

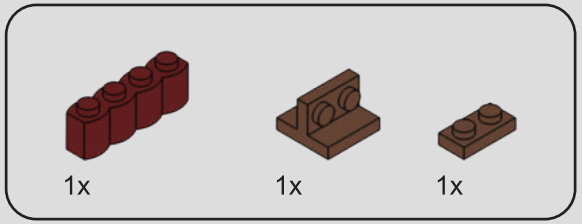

328

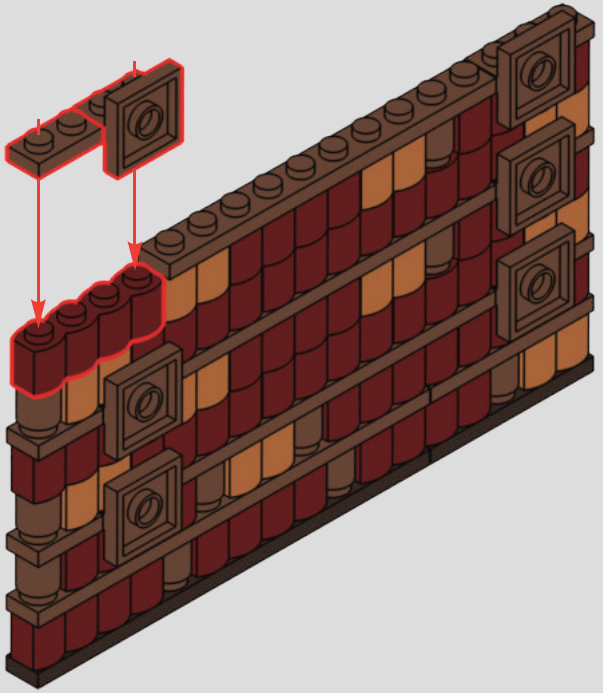

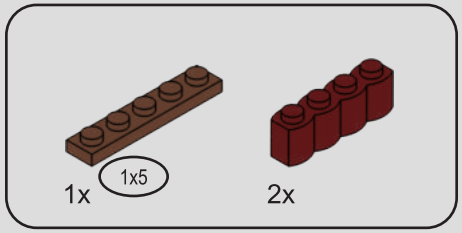

329

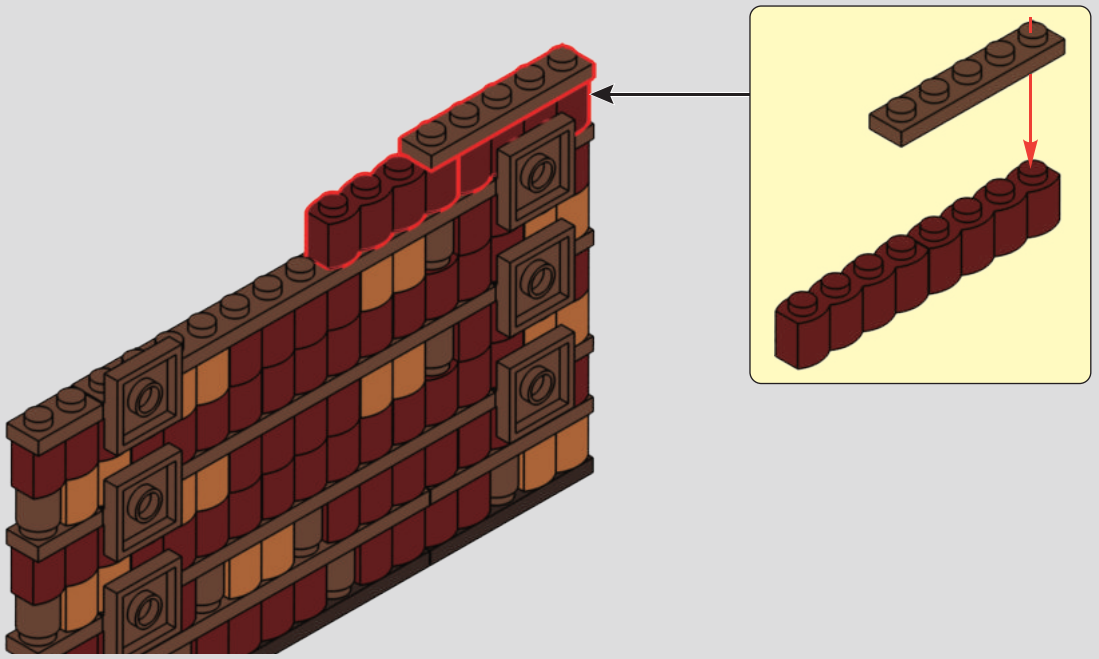

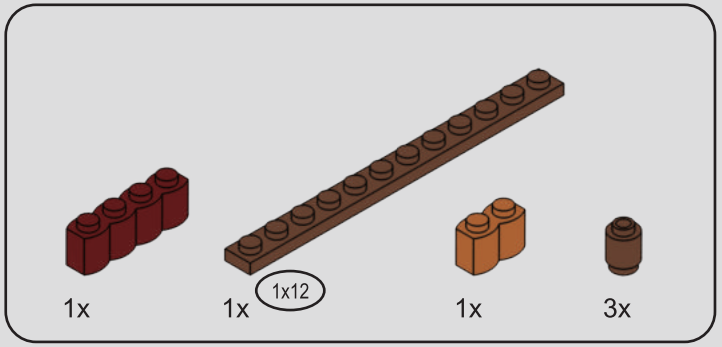

330

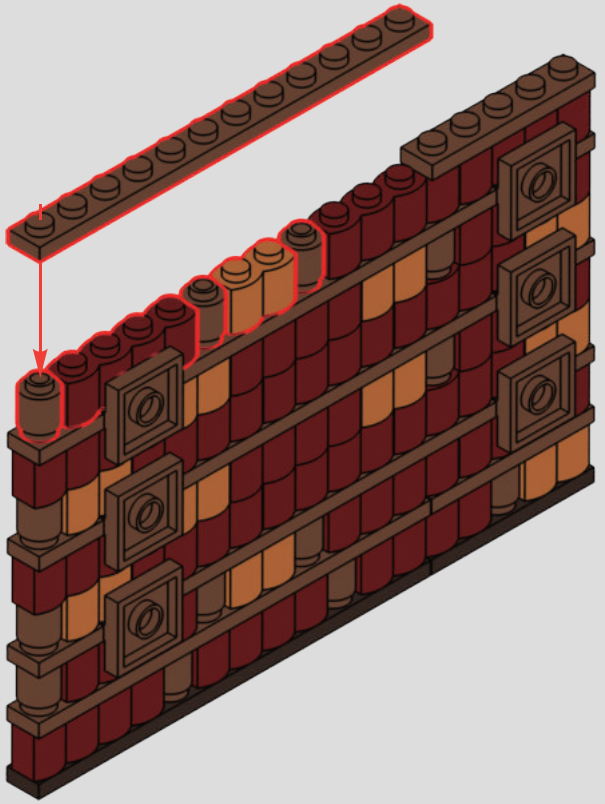

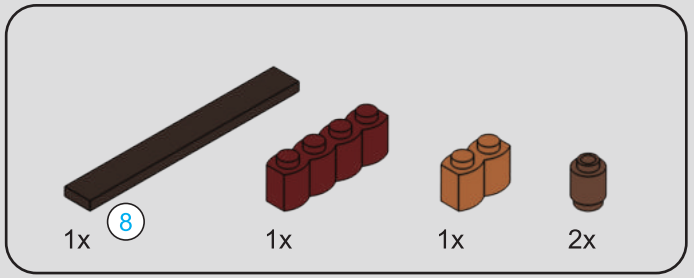

331



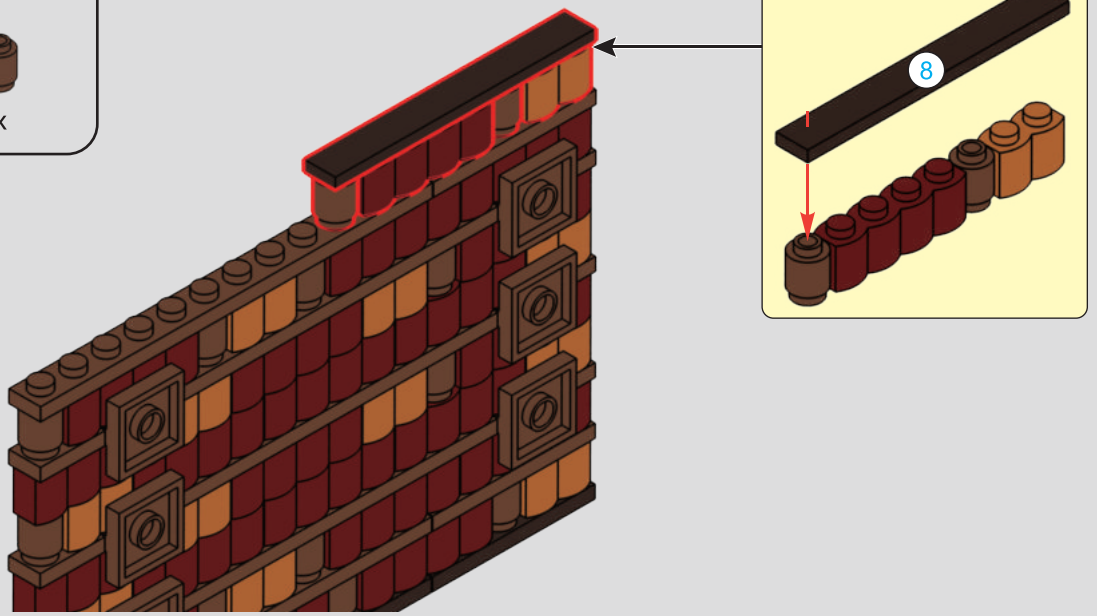

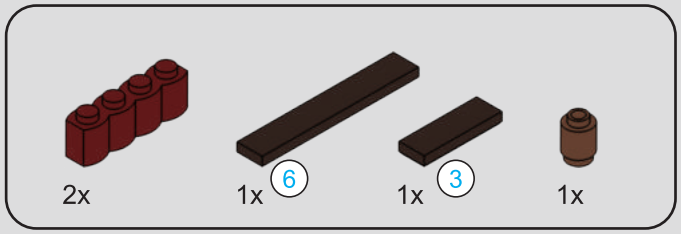

332



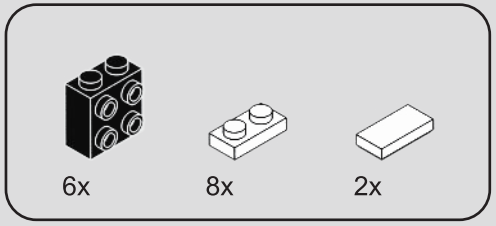

333

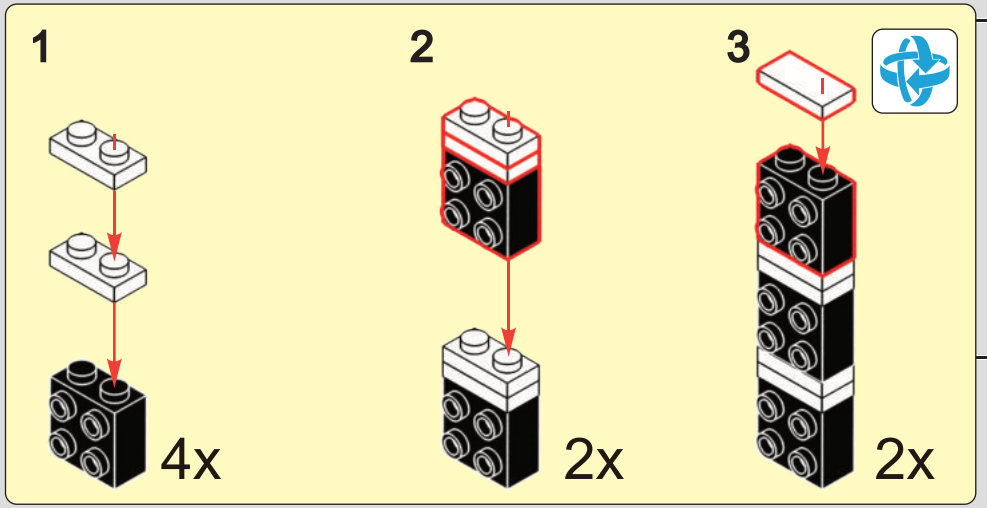

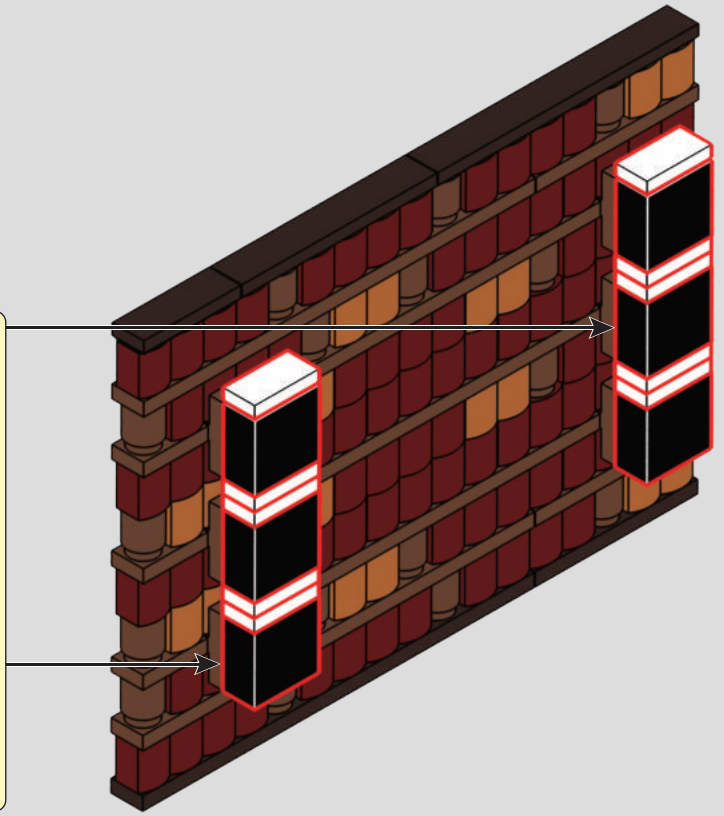

334



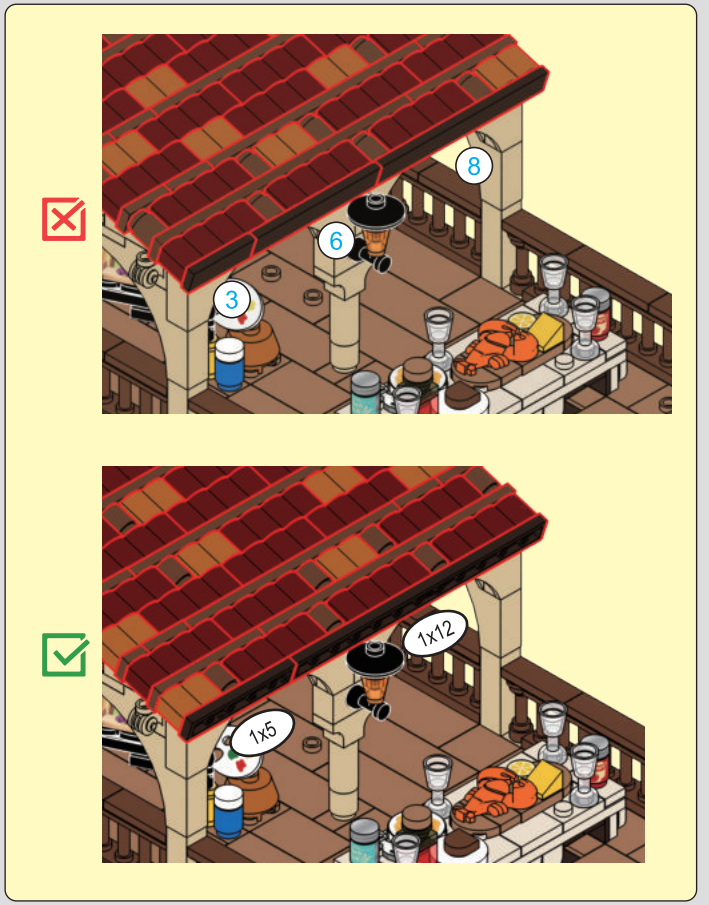

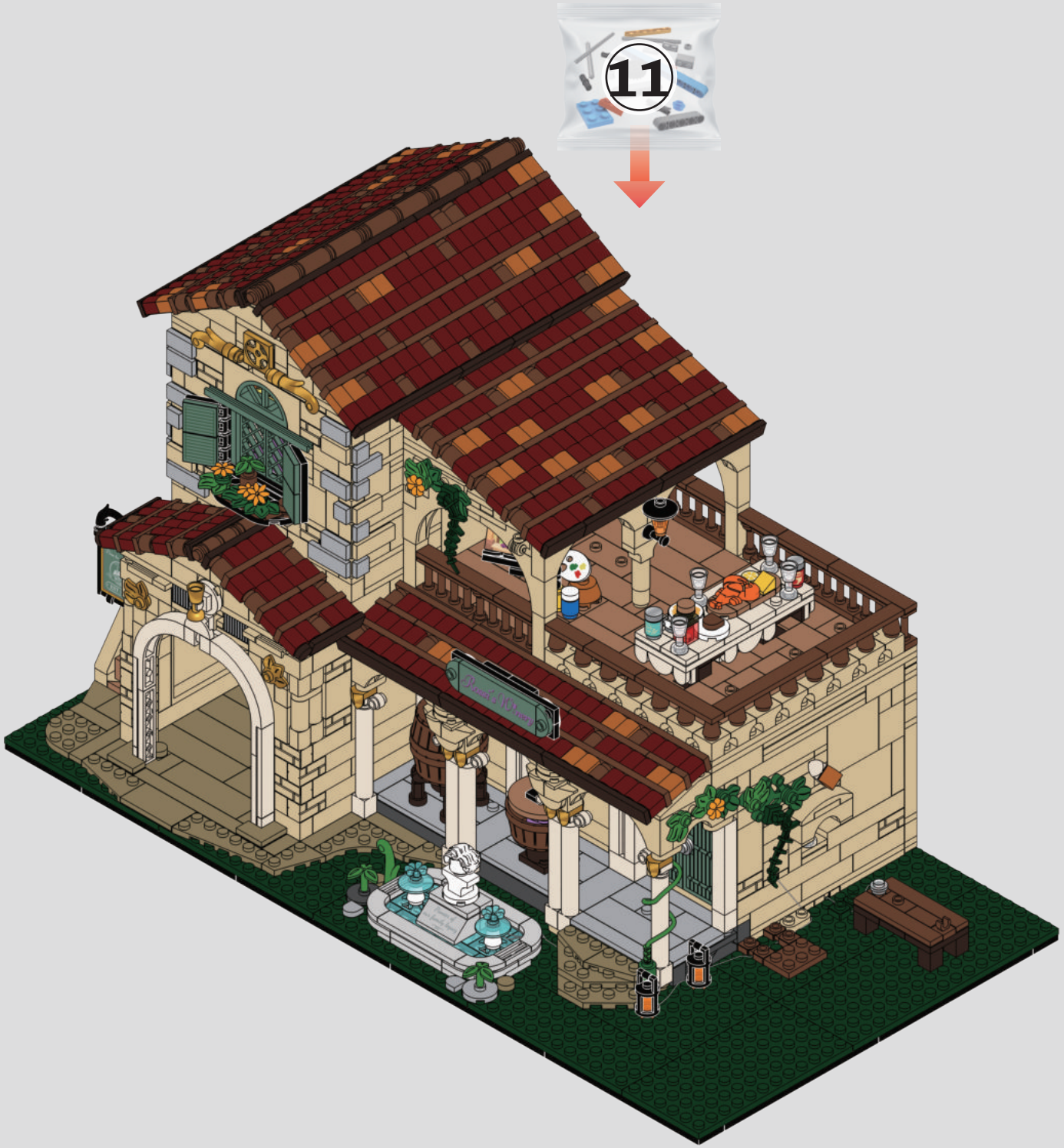
11

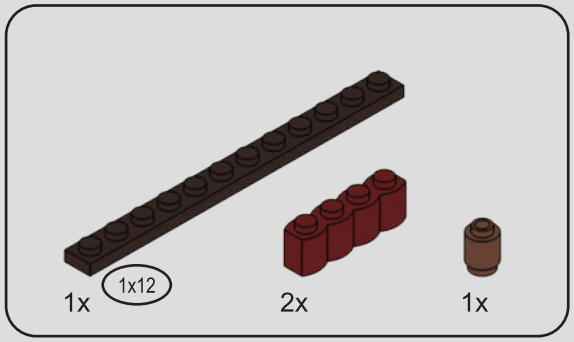

335

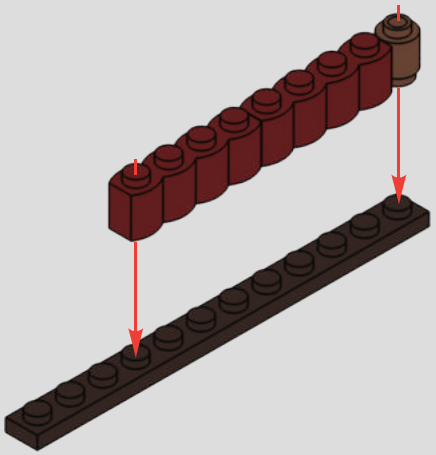

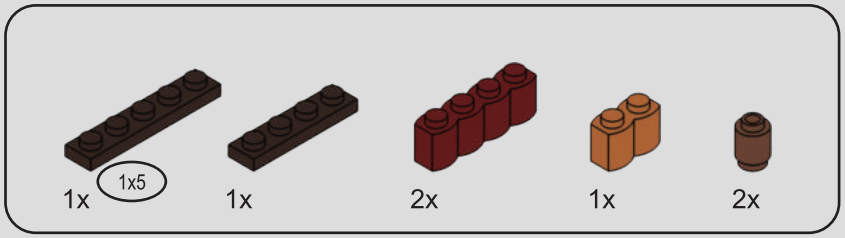

336

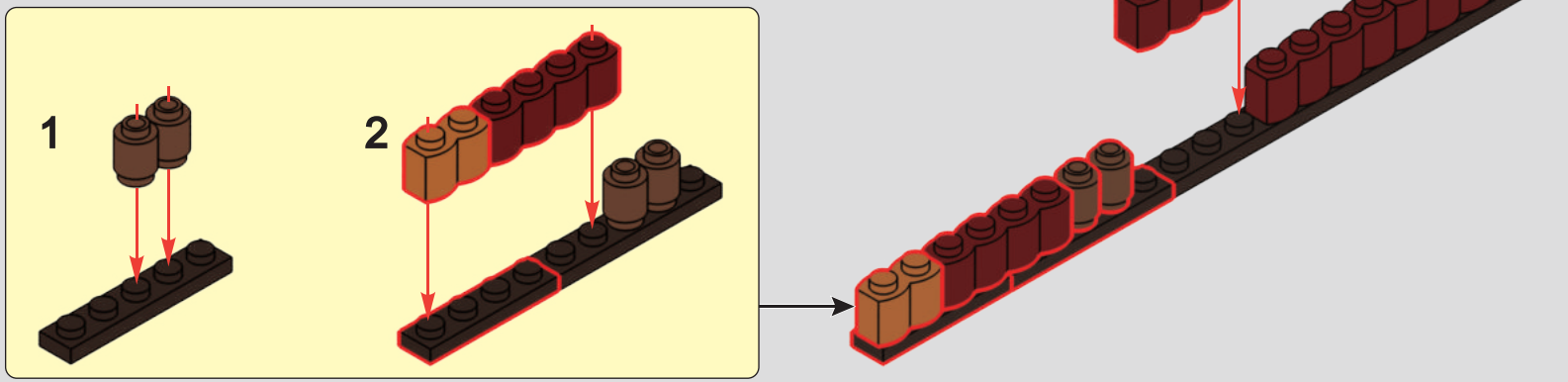

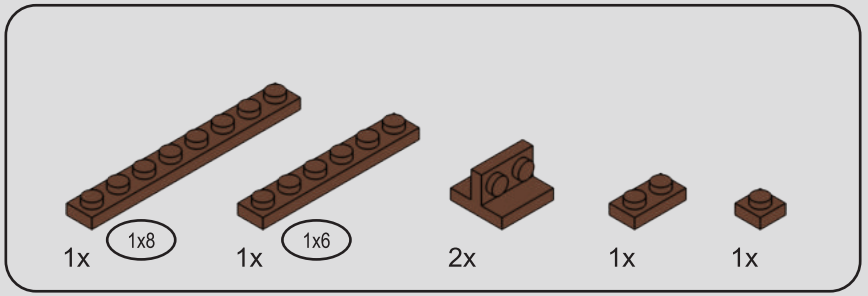

337

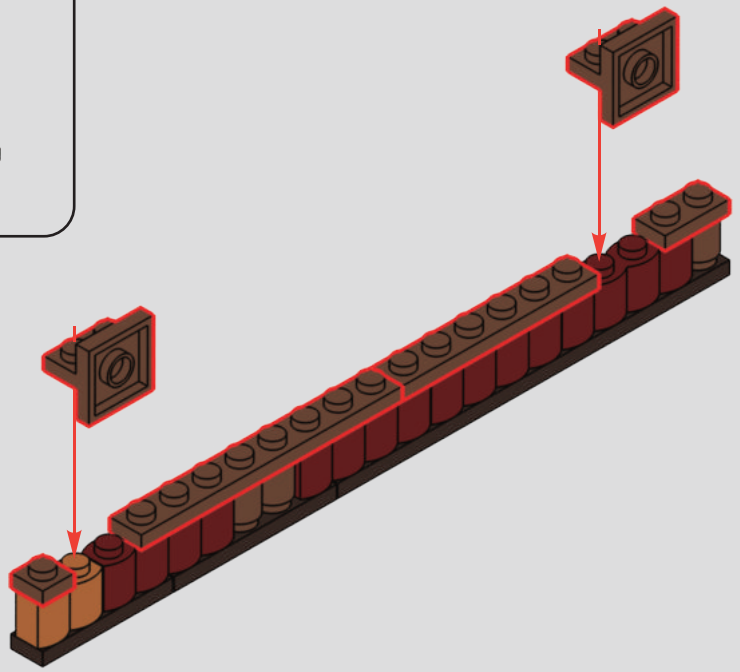

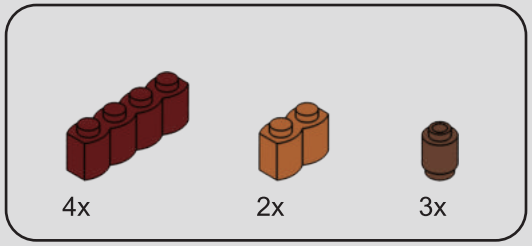

338

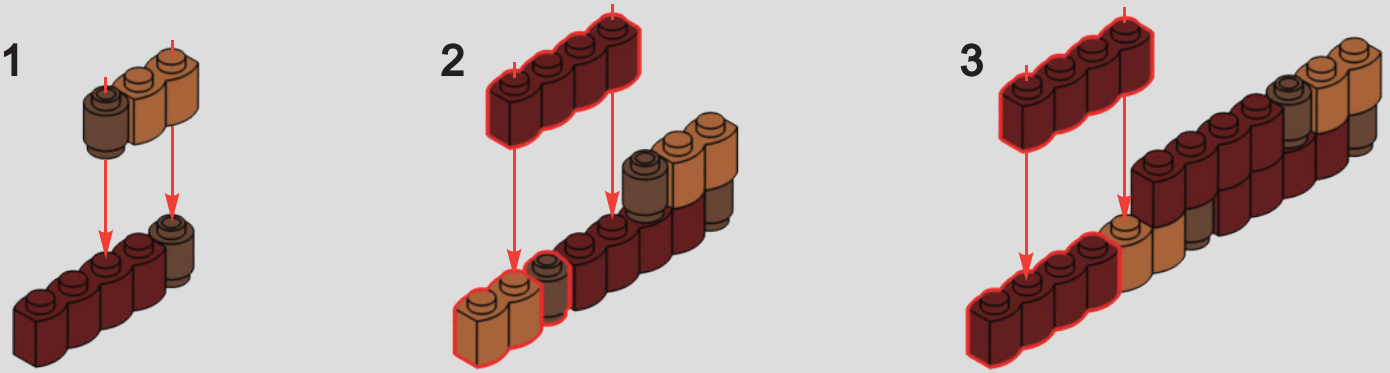

339

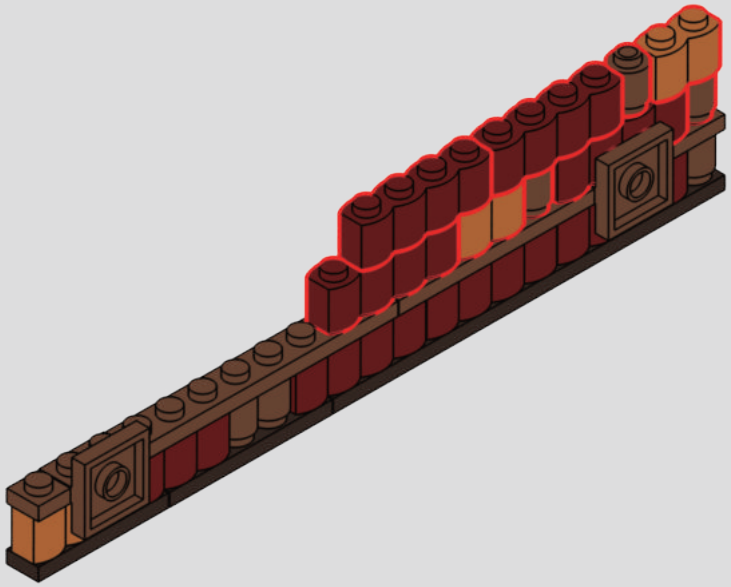

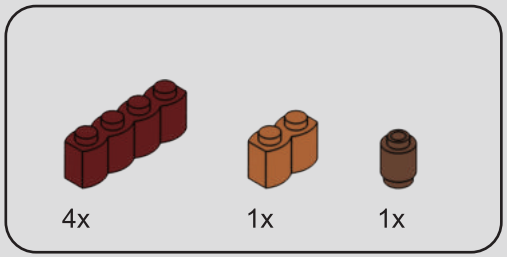

340

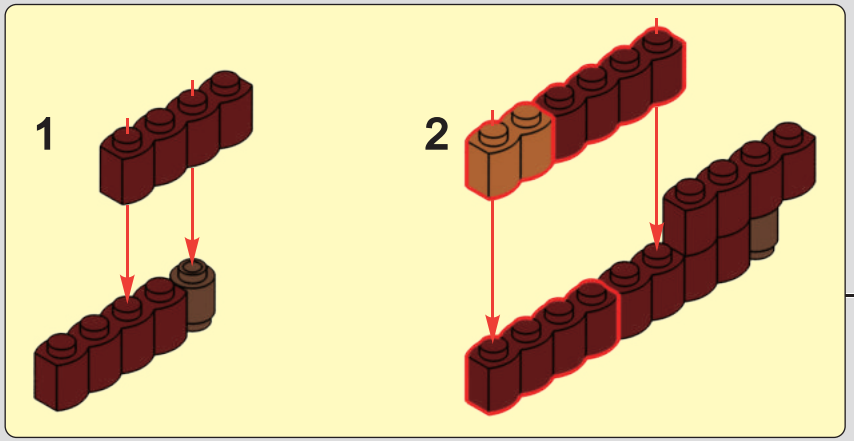

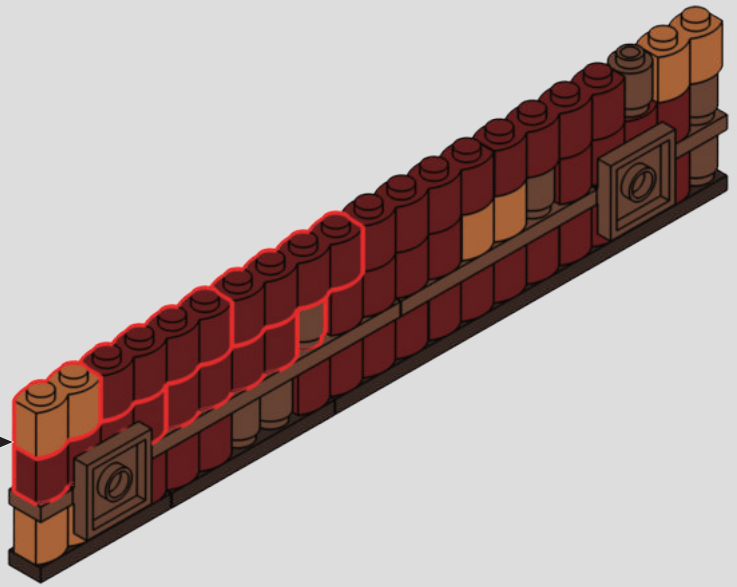

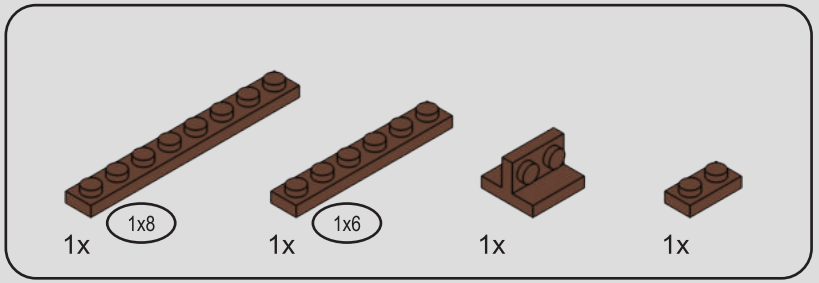

341

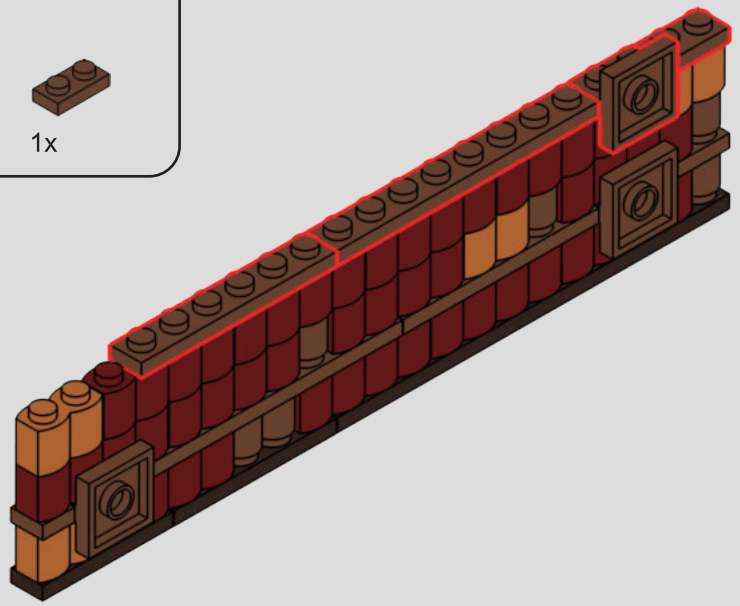

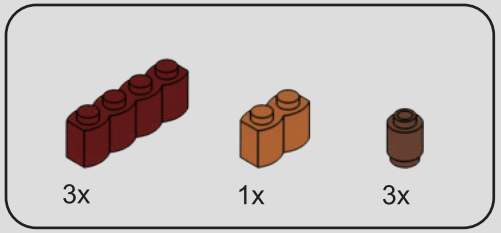

342

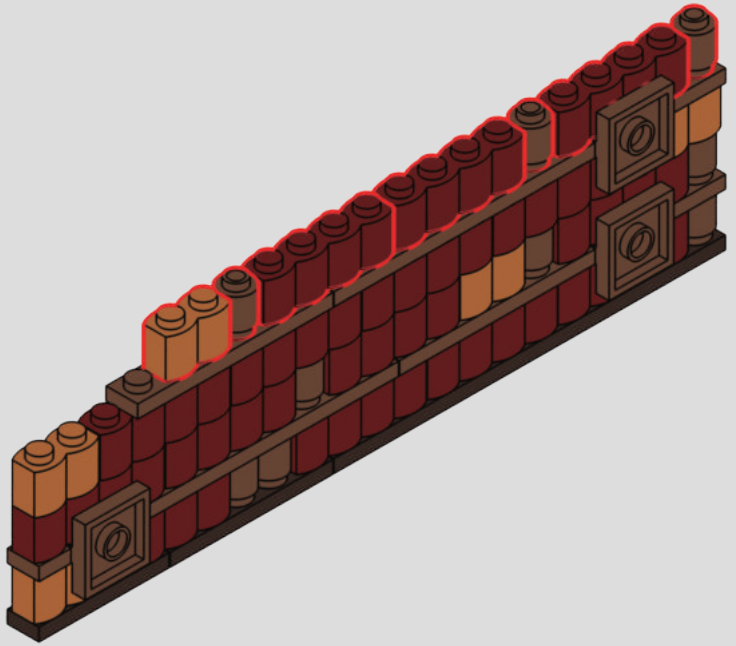

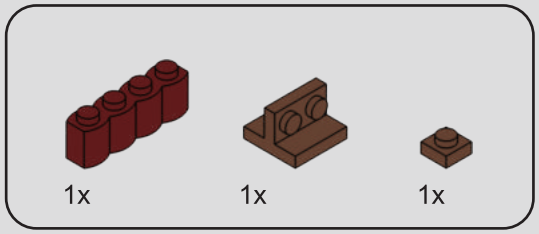

343

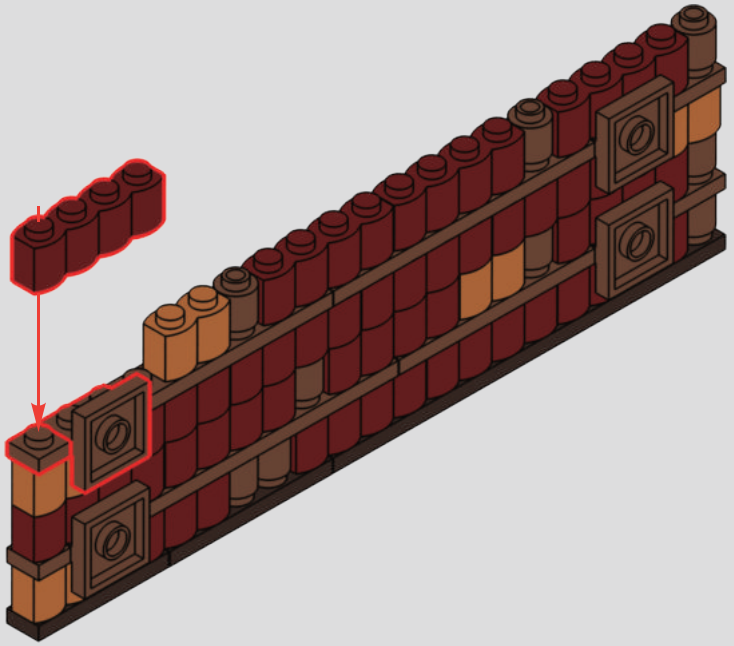

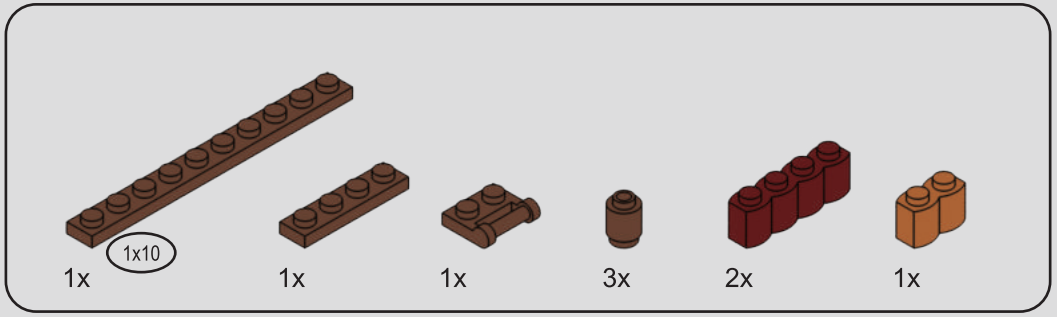

344

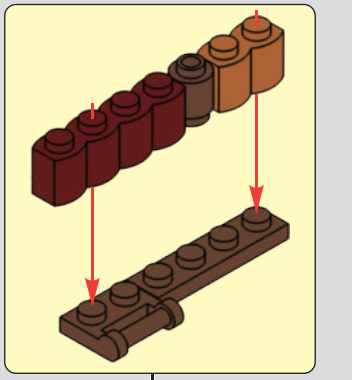

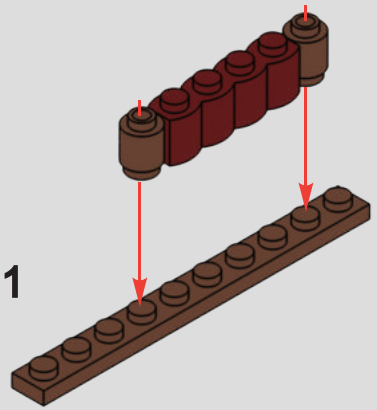

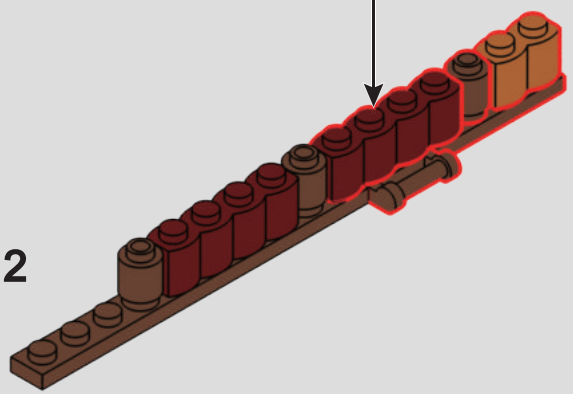

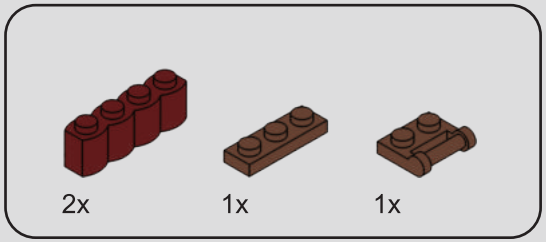

345

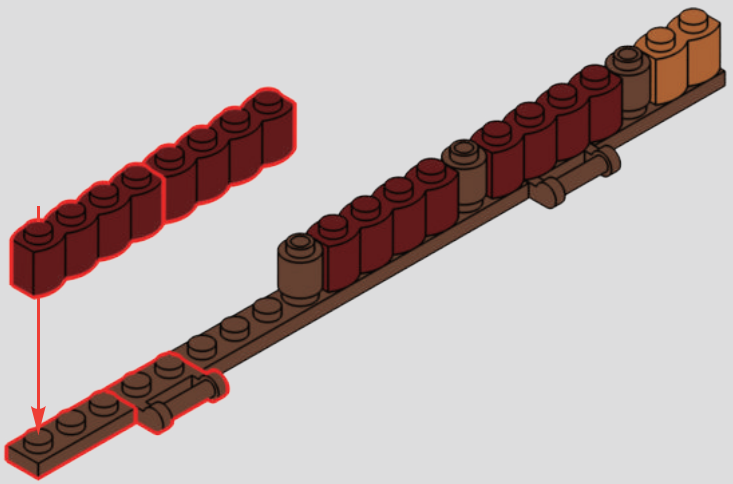

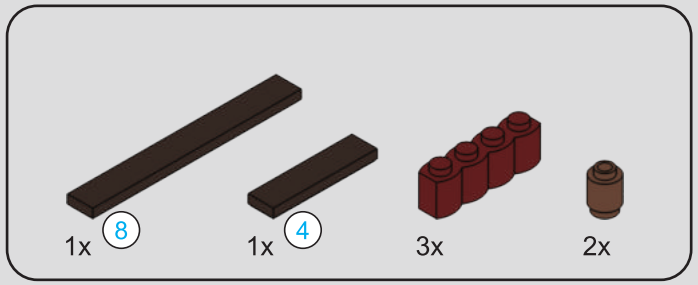

346



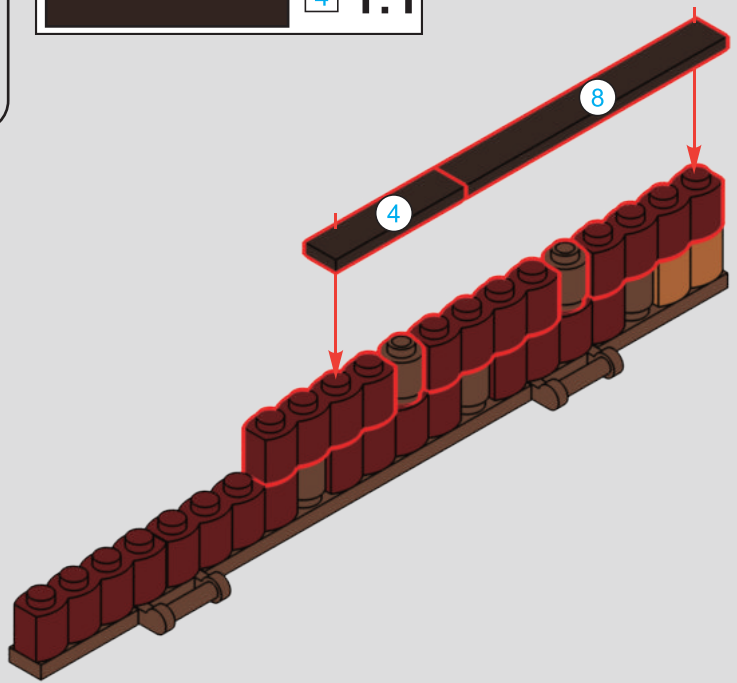

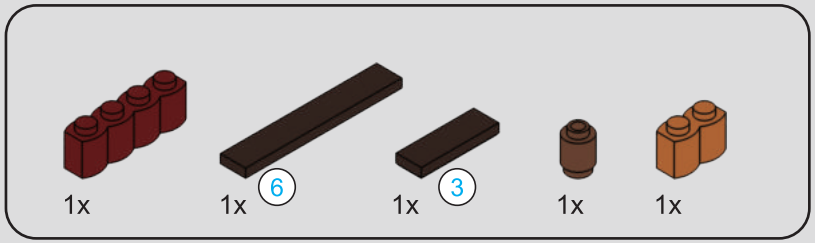



347

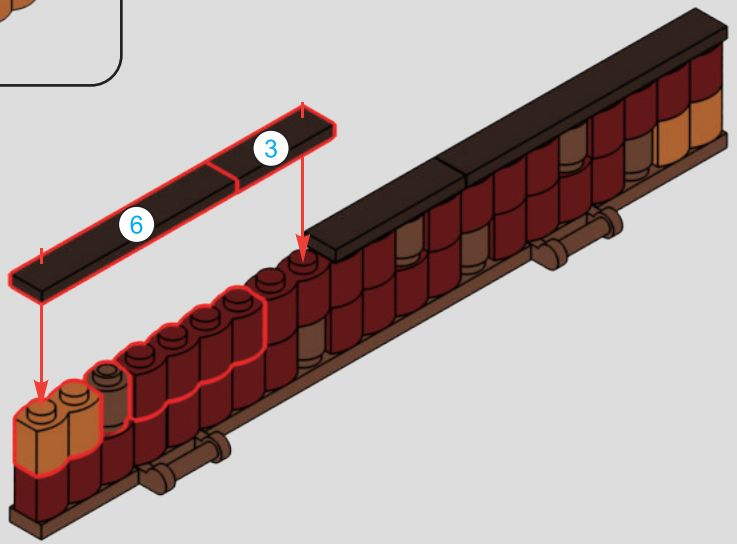

348

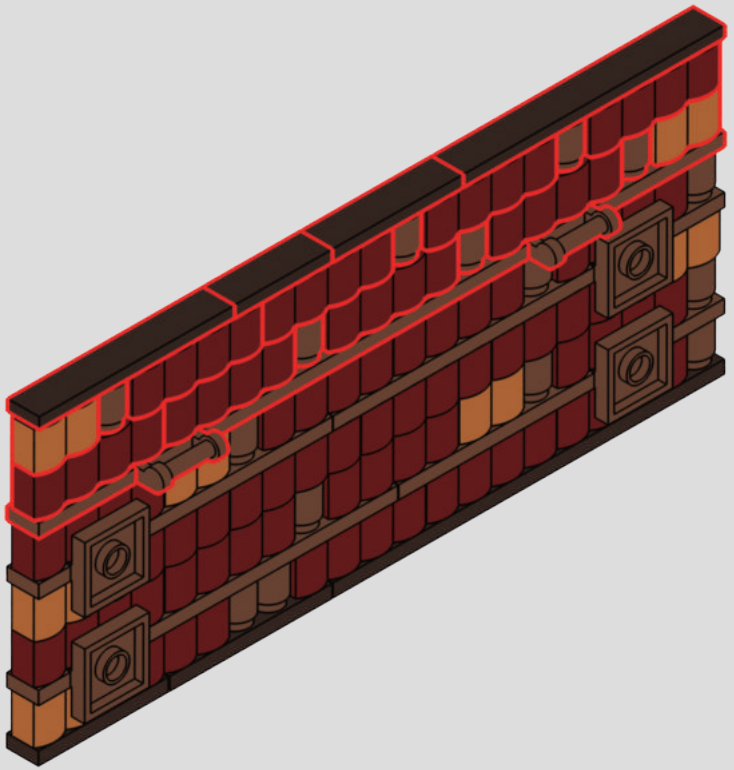

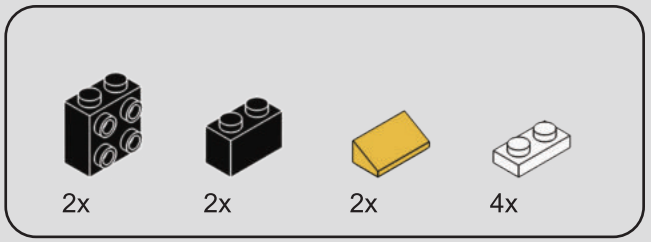

349

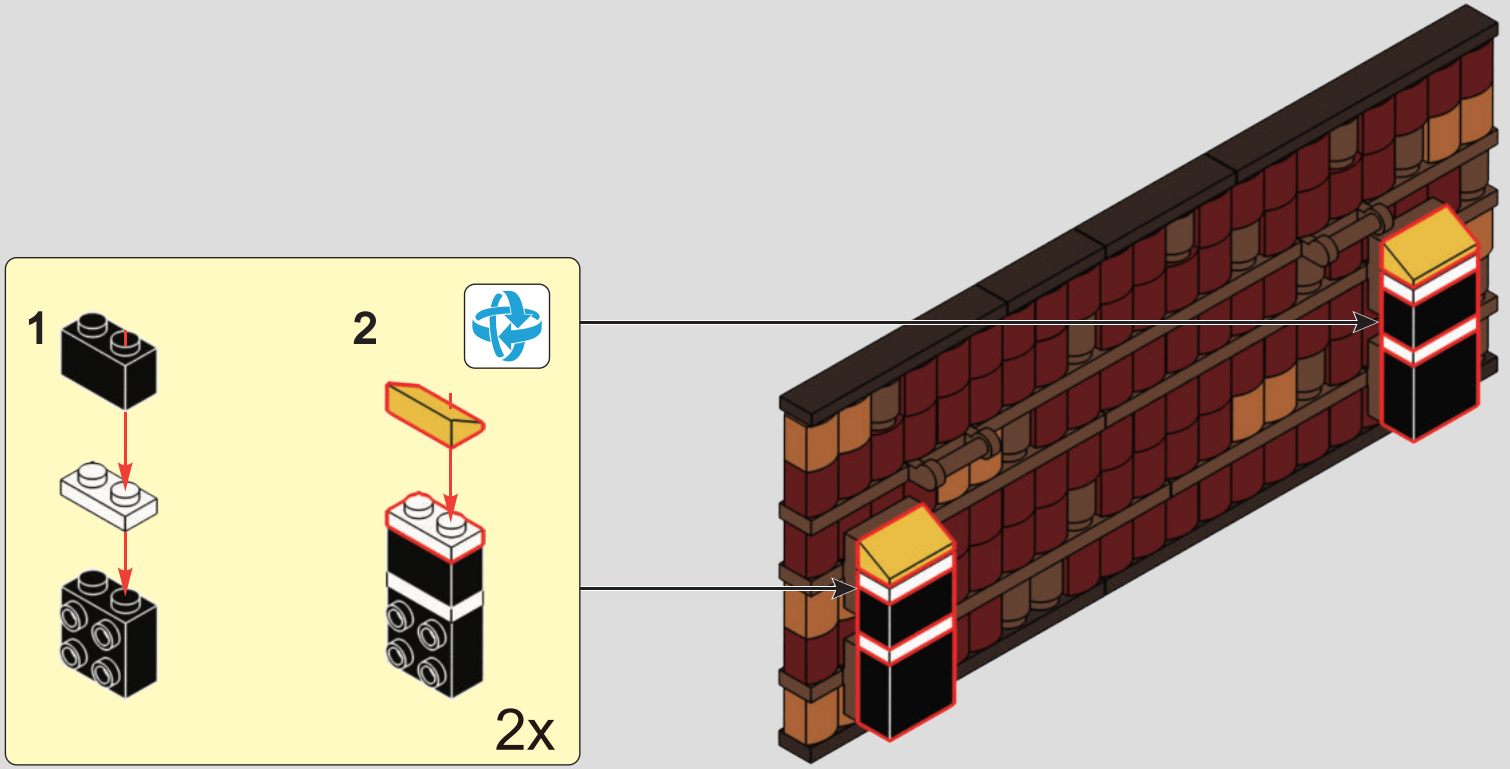

350

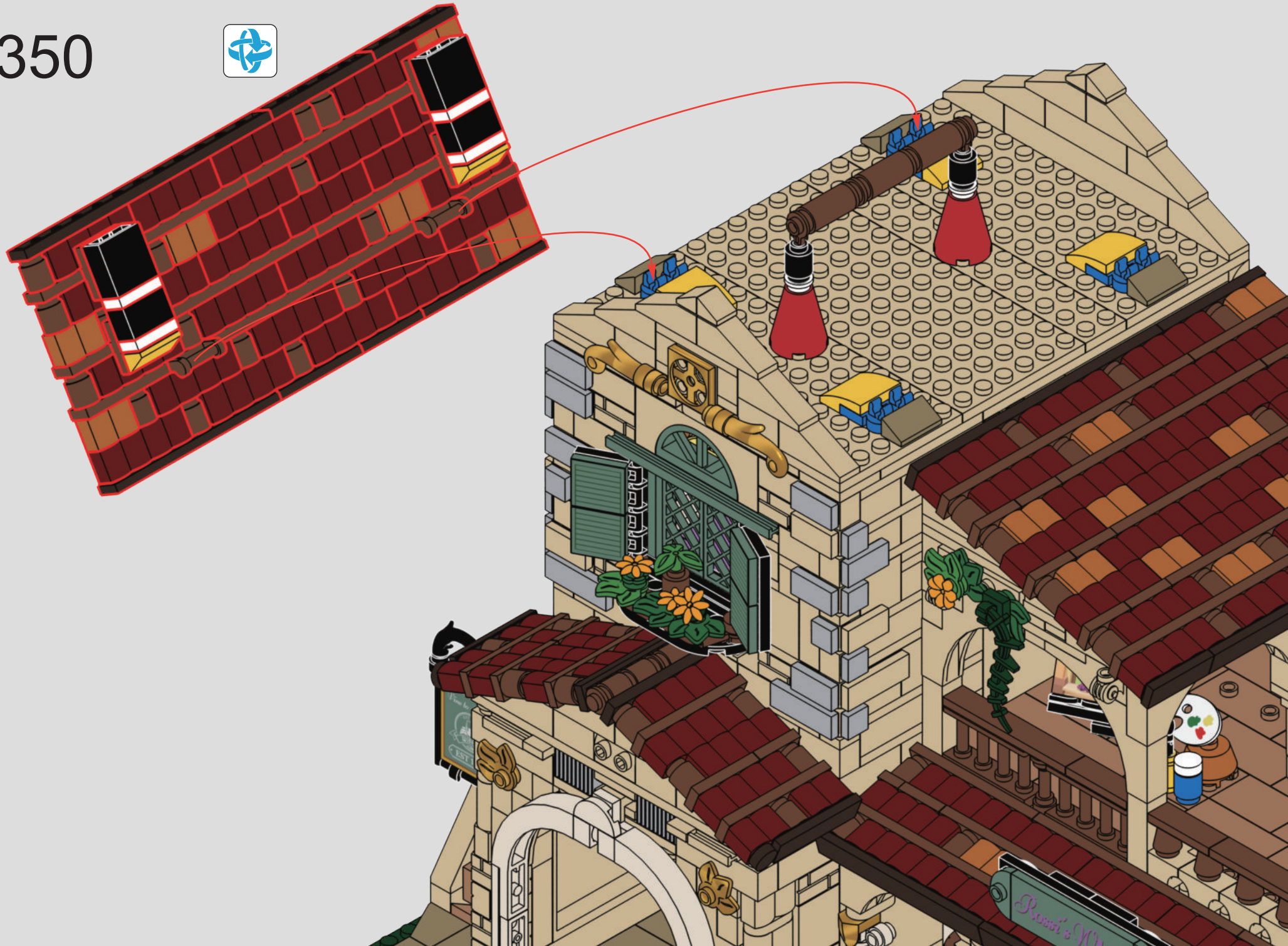

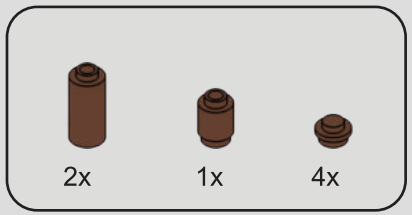

351

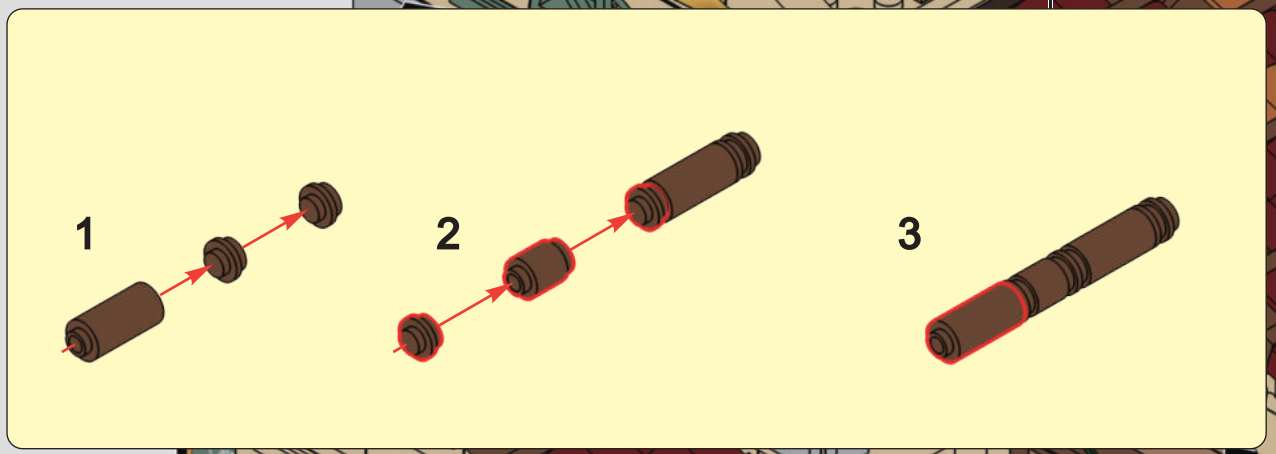

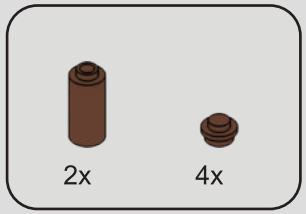

352

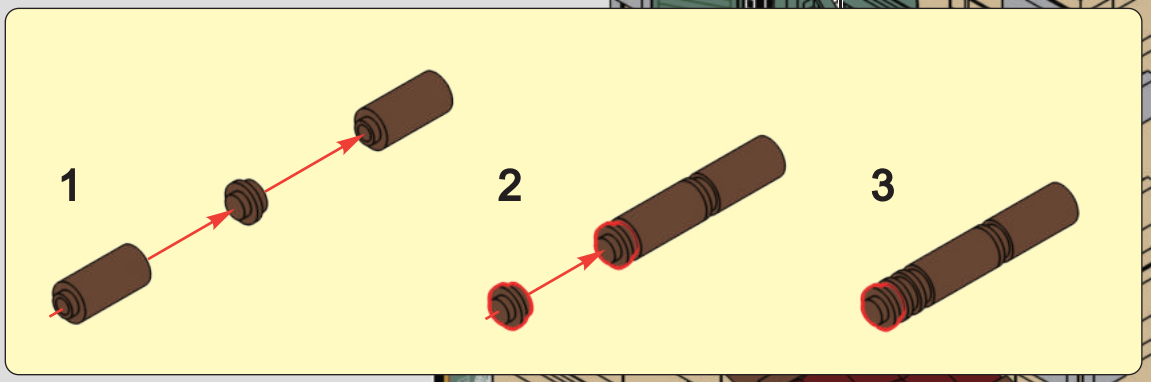

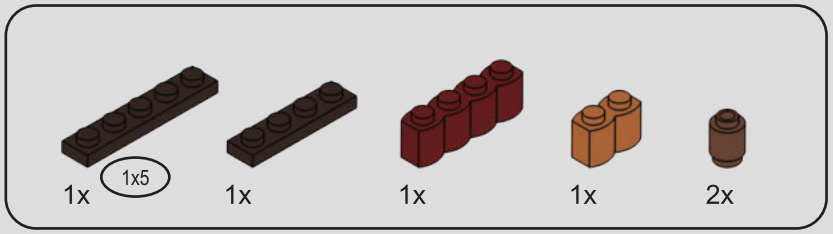

353

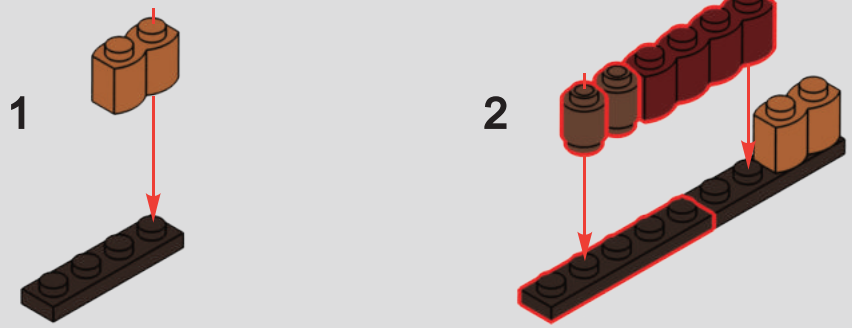

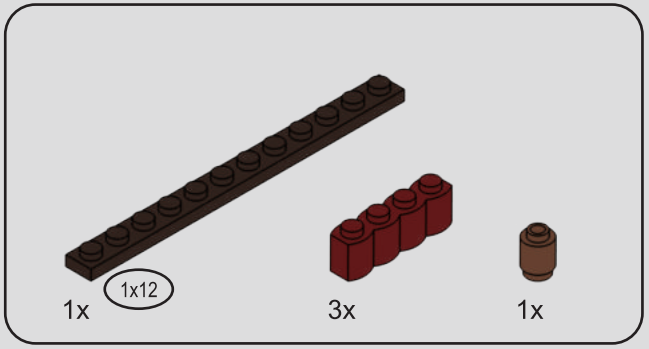

354

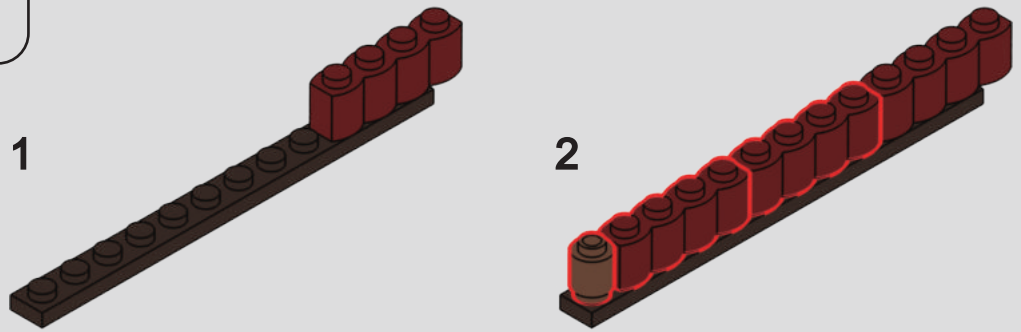

355

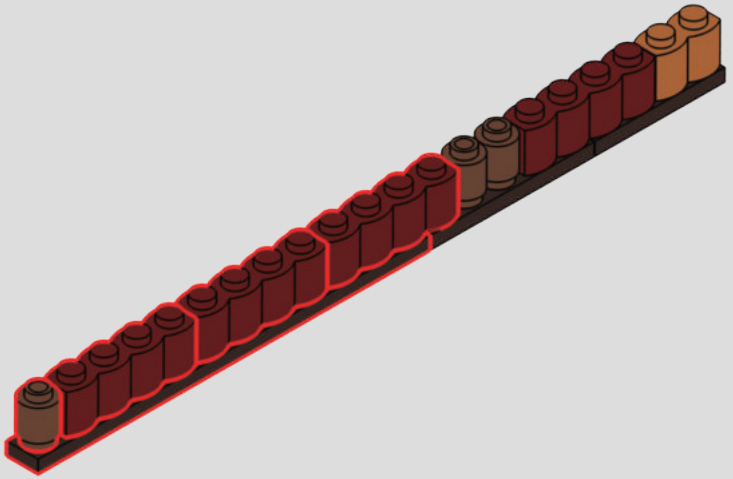

356

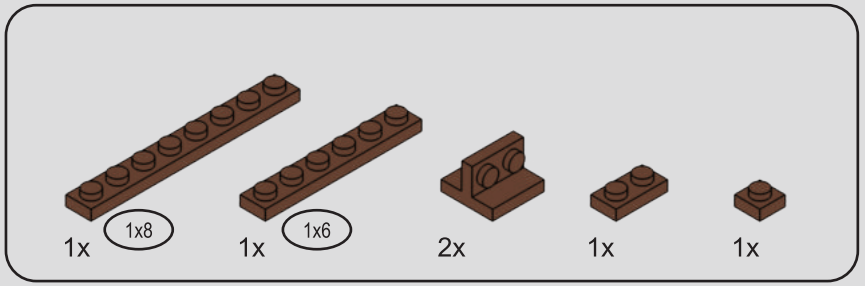

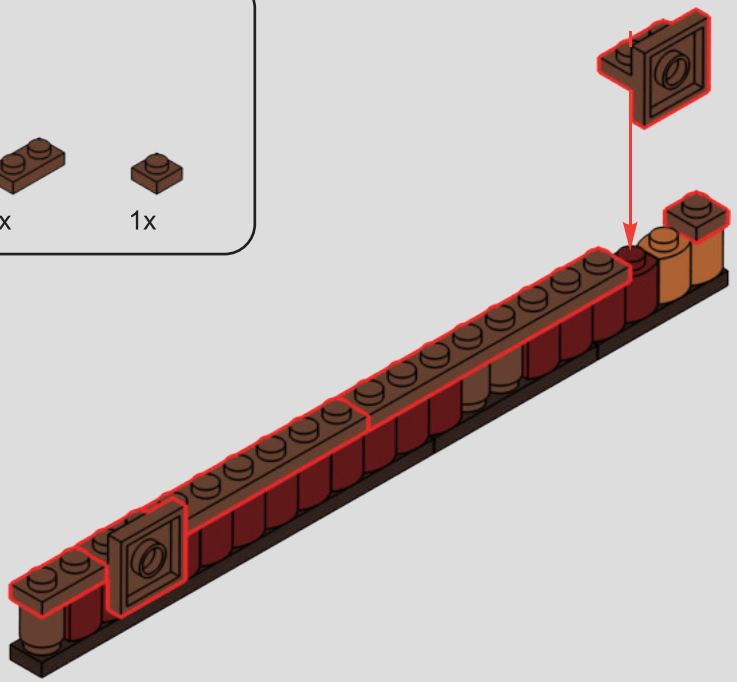

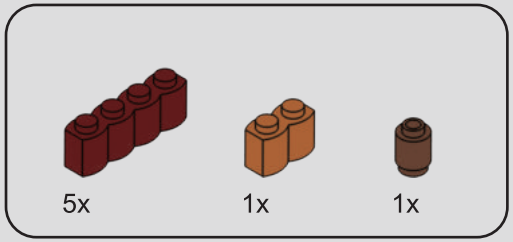

357

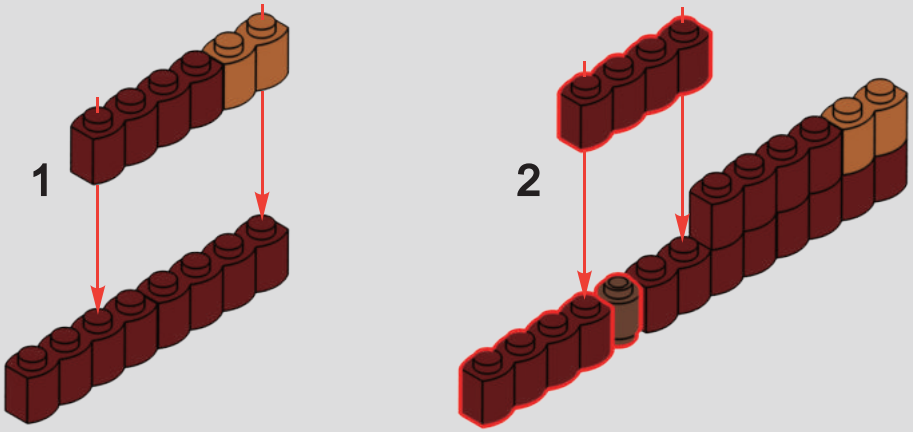

358

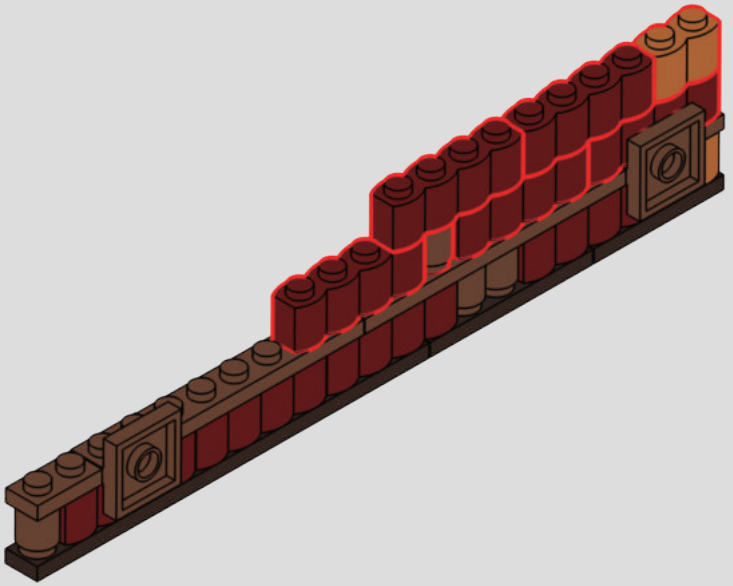

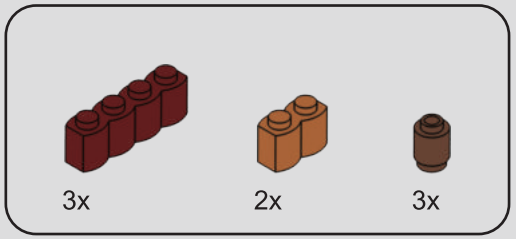

359

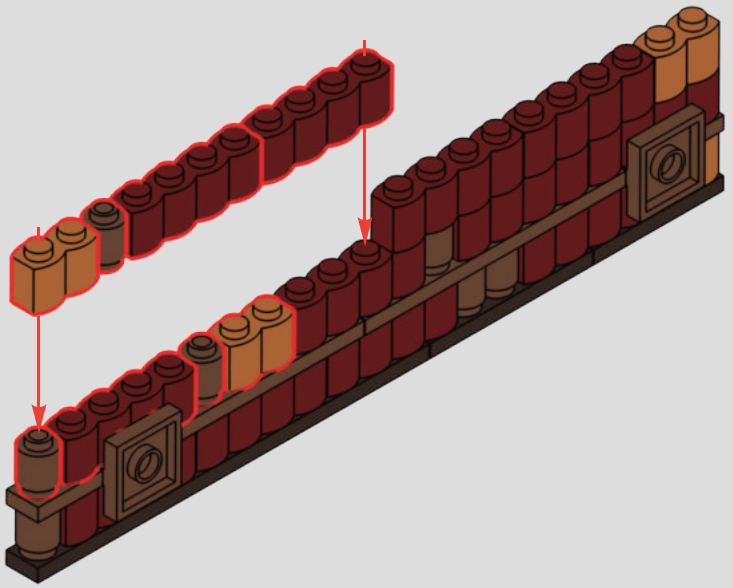

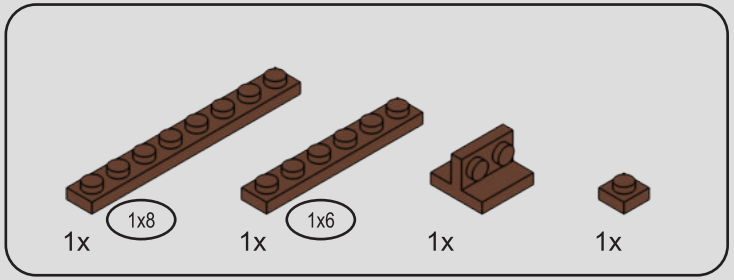

360

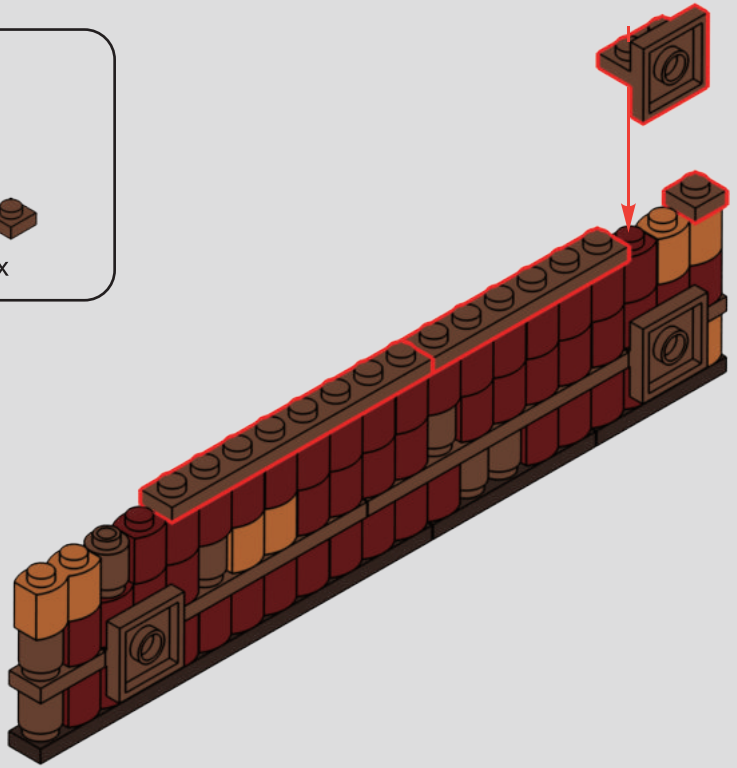

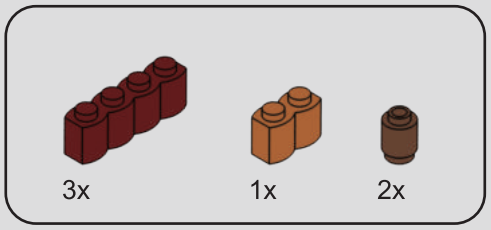

361

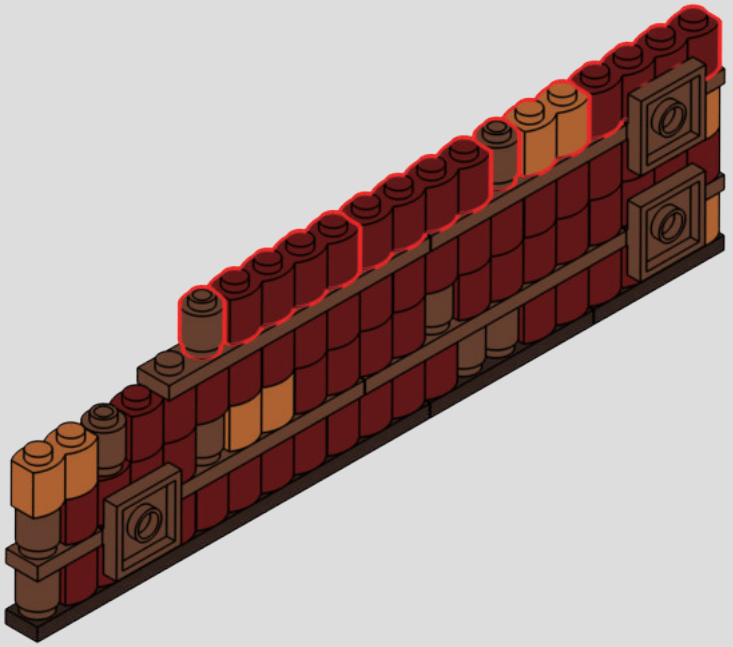

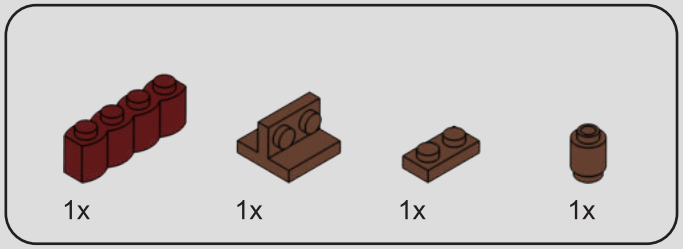

362

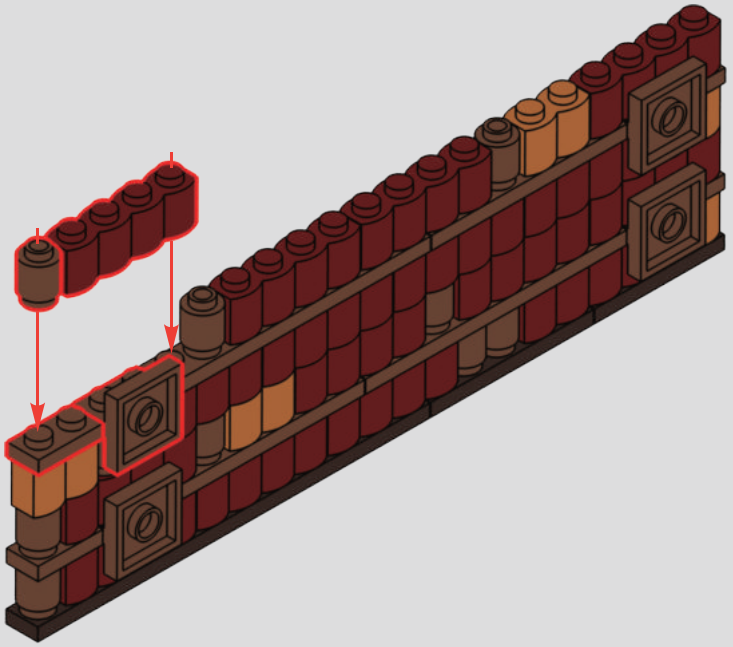

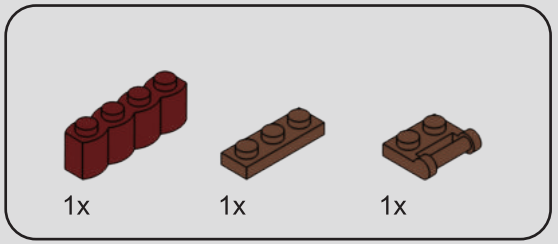

363

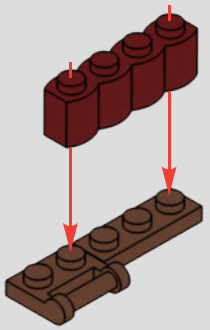

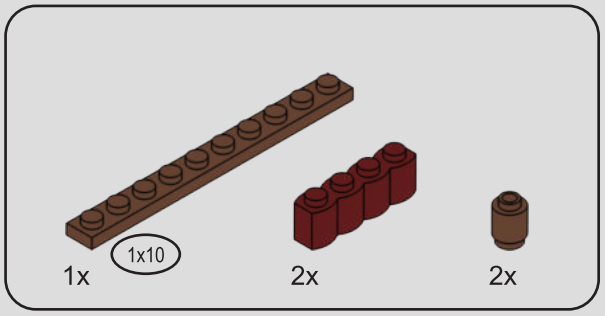

364

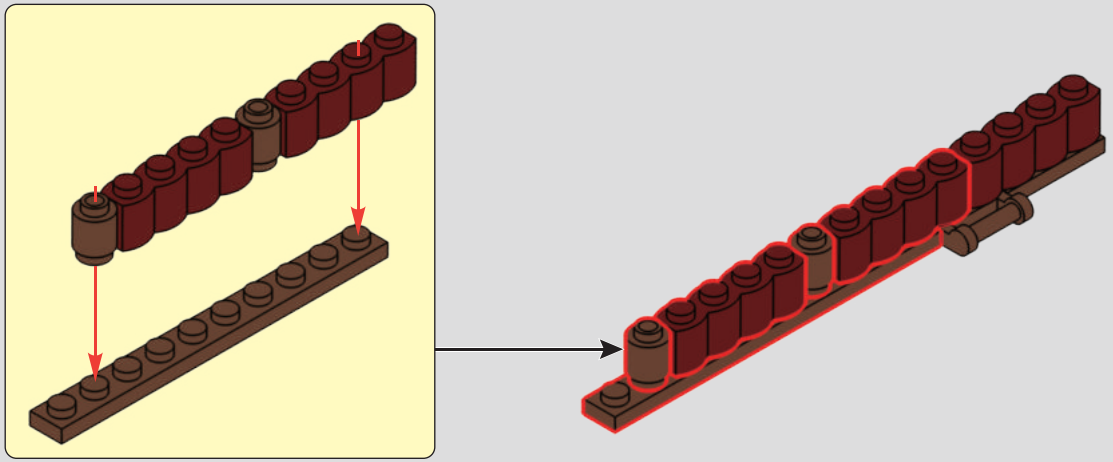

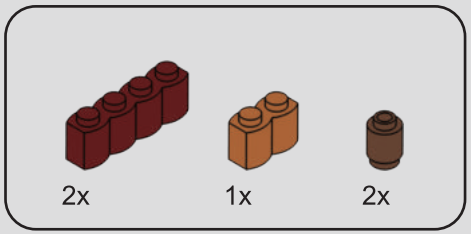

365

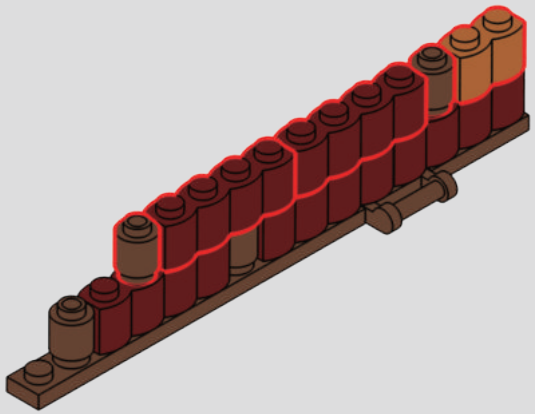

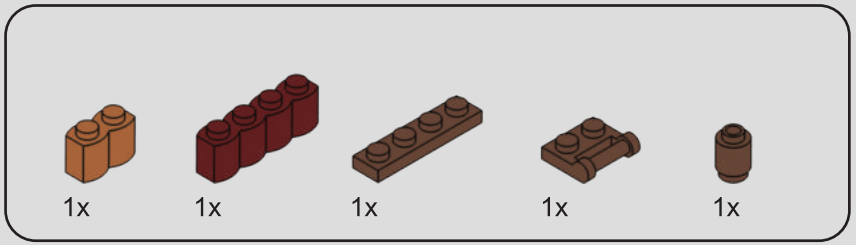

366

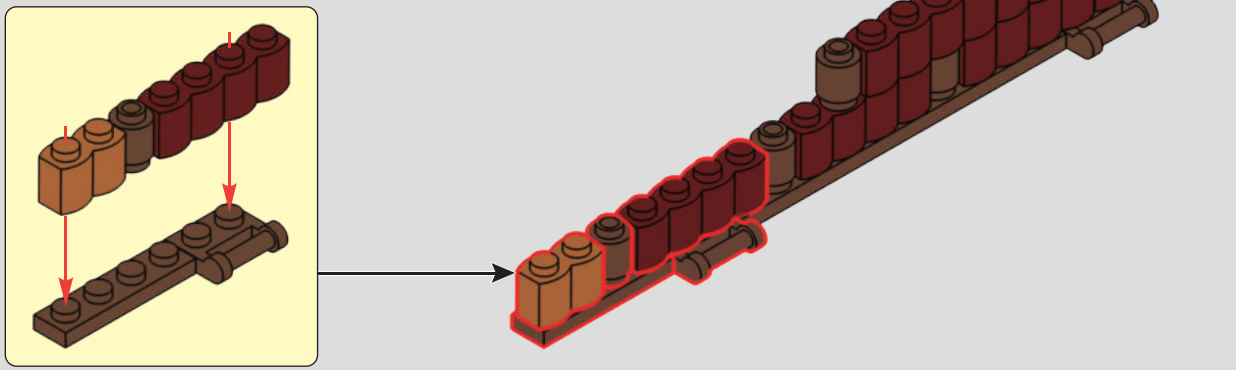

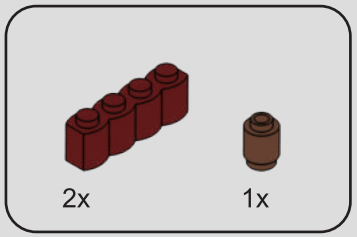

367

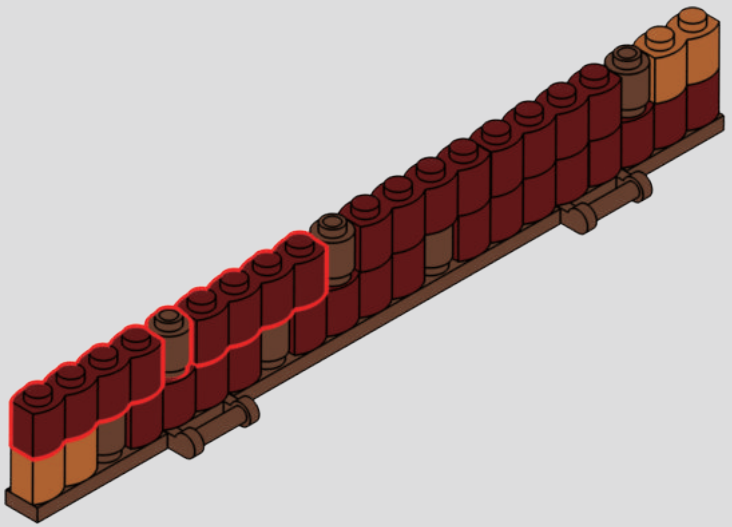

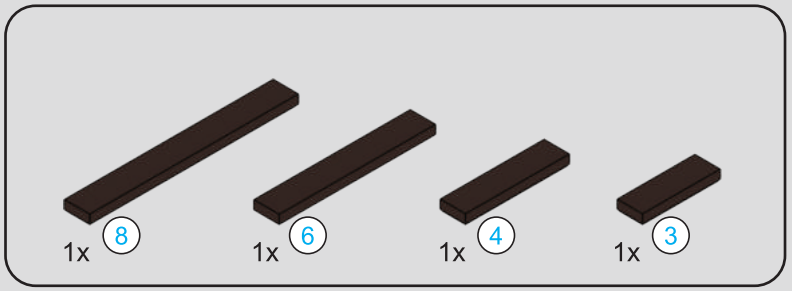

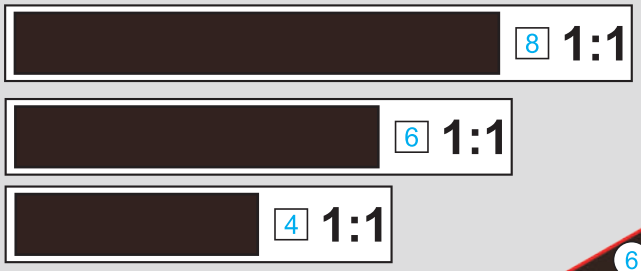

368

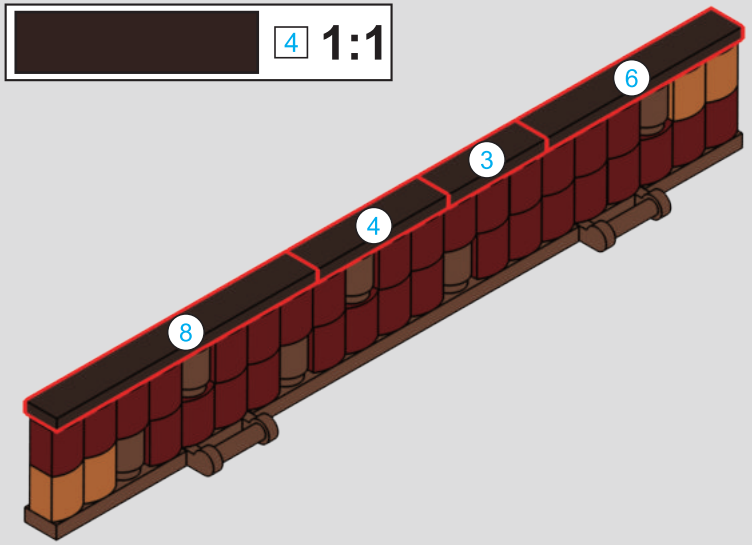

369

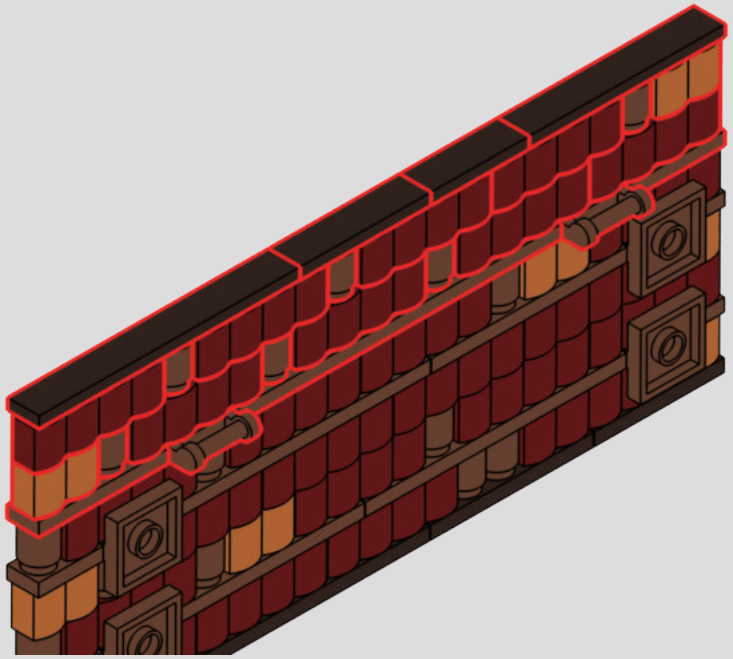

370

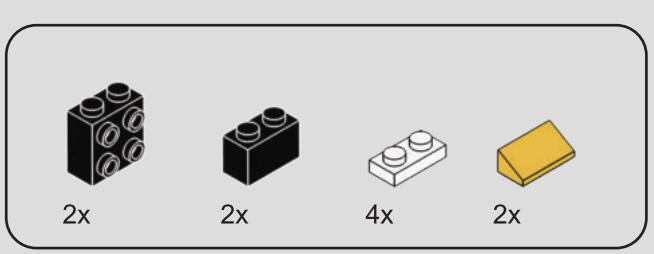

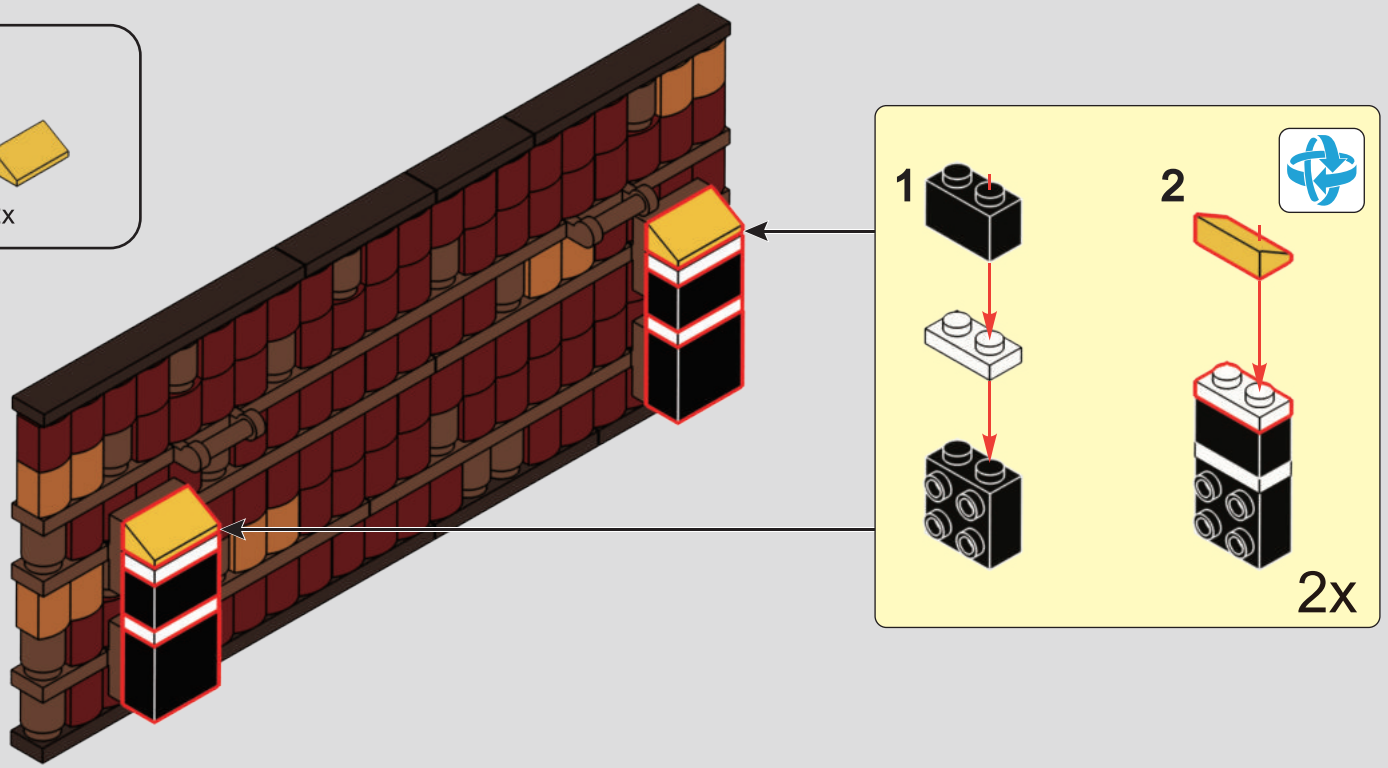

371



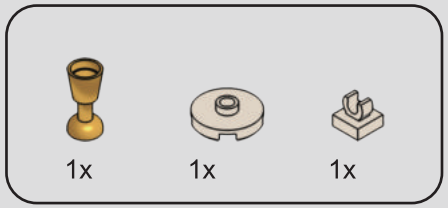

372

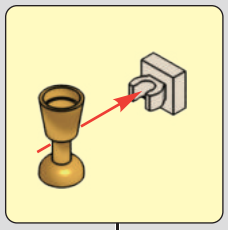



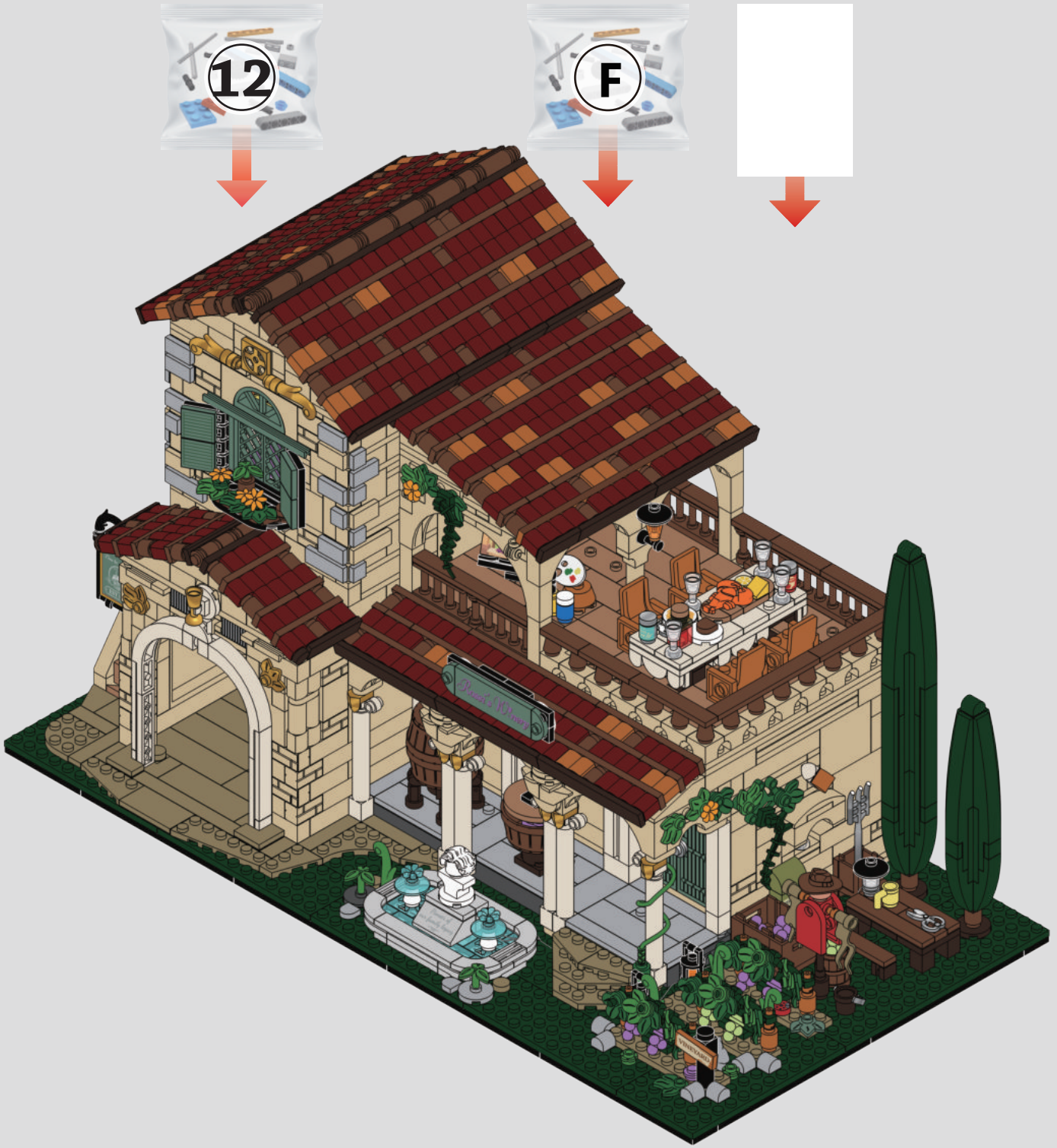
12
F



373





374



375



376

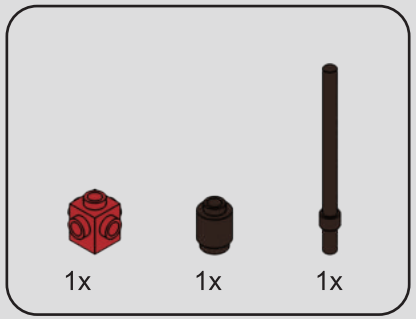

377

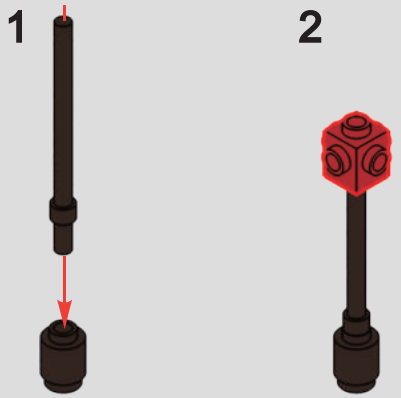

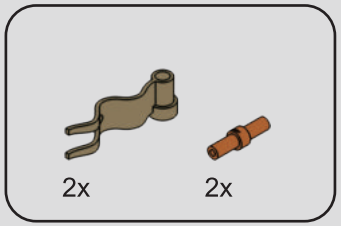

378

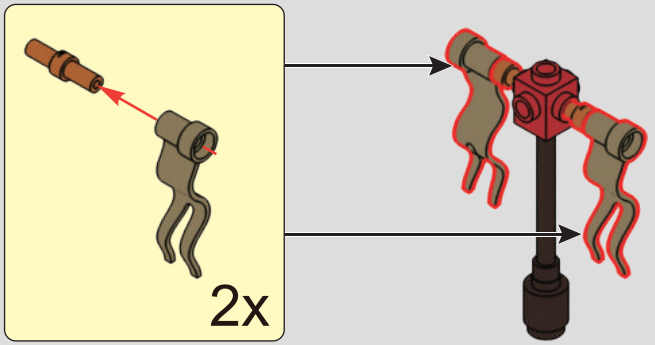

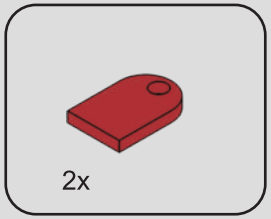

379

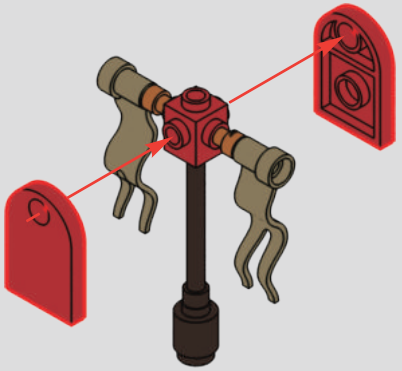

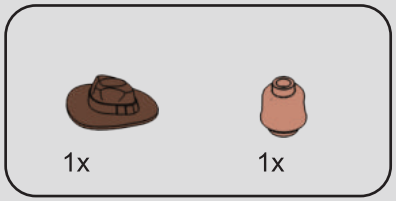

380

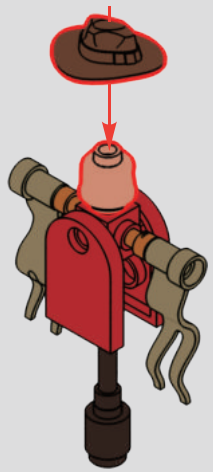

381





382



383

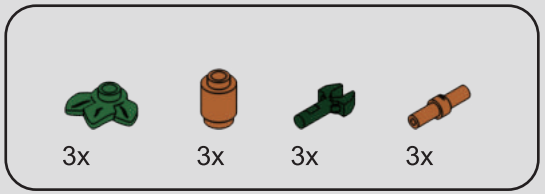

384

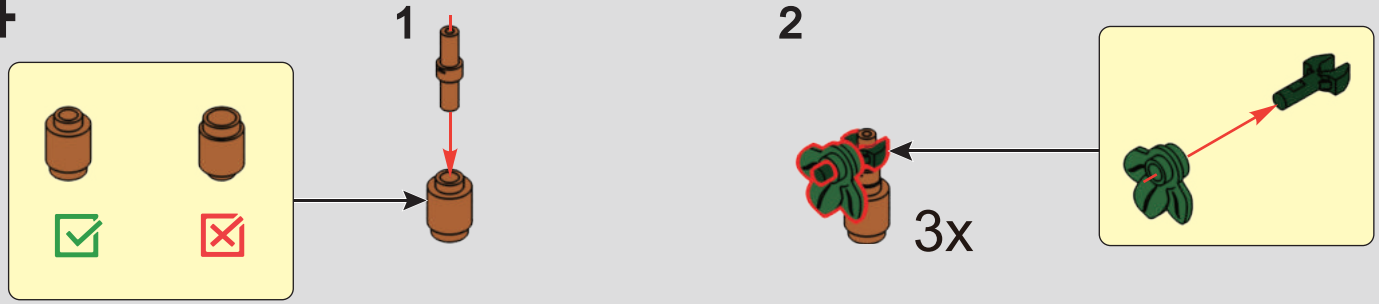

385




3x
6x
2x
4x
386
2x
4x



387



388

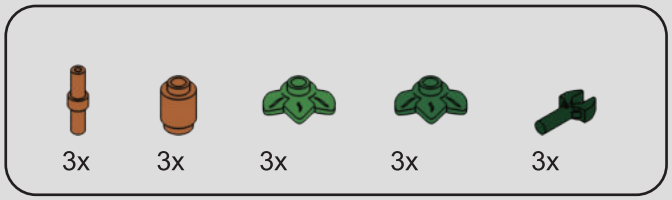

389

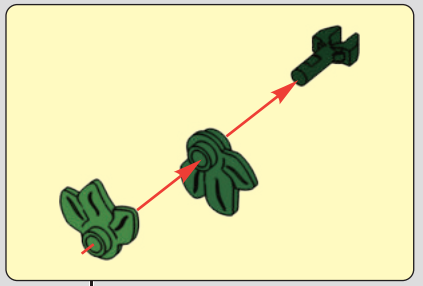

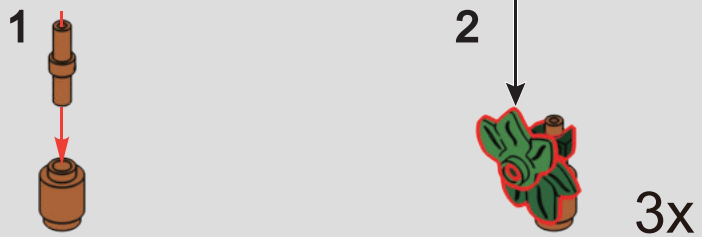

390



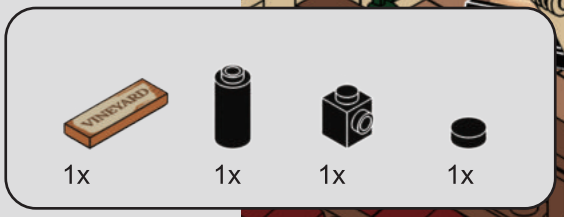
VINEYARD
1x
1x
1x
1x

391

Rossi's Winery
Pioneer of our family legacy
1
2
VINEYARD
VINEYARD

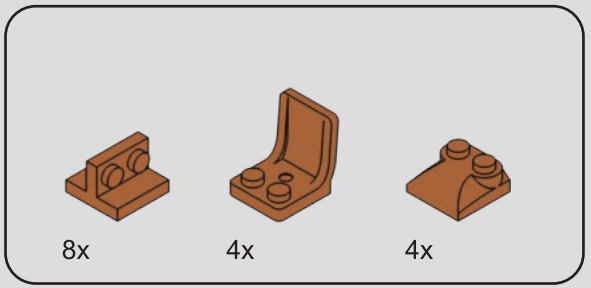

392

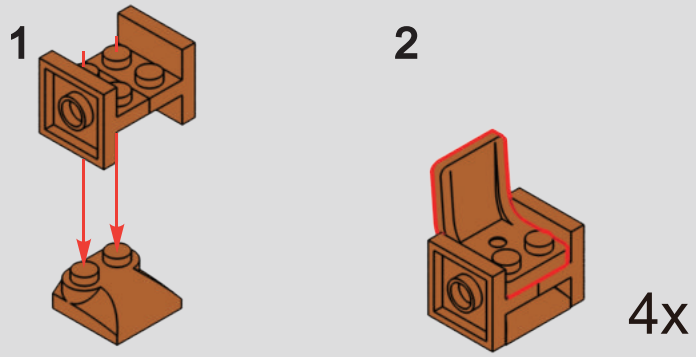

393



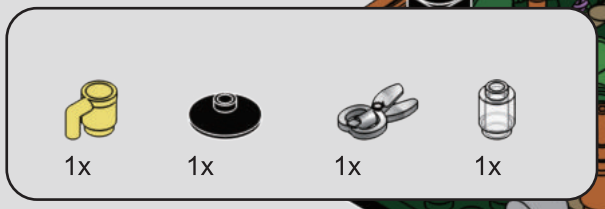

394



395



396

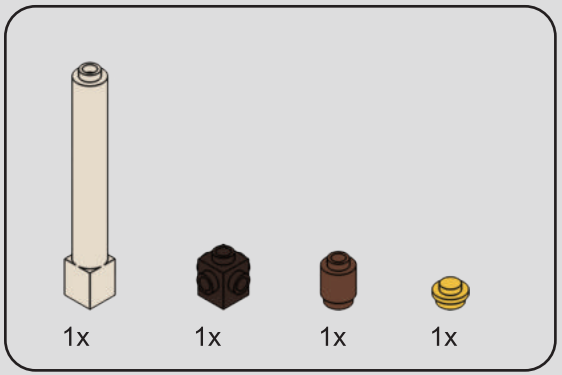

397

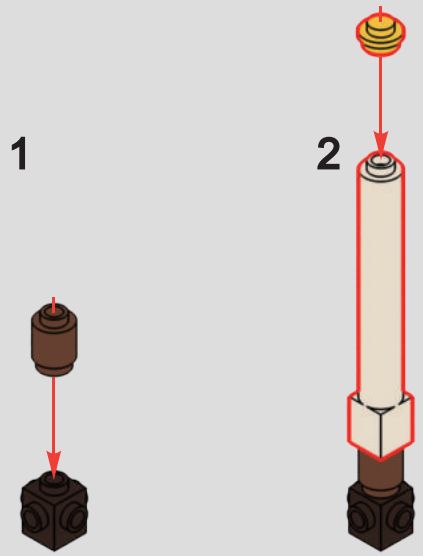

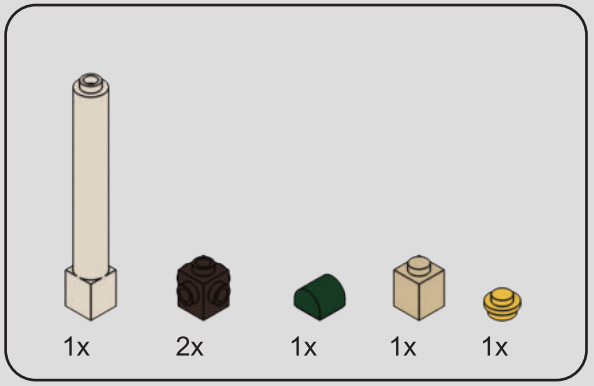

398

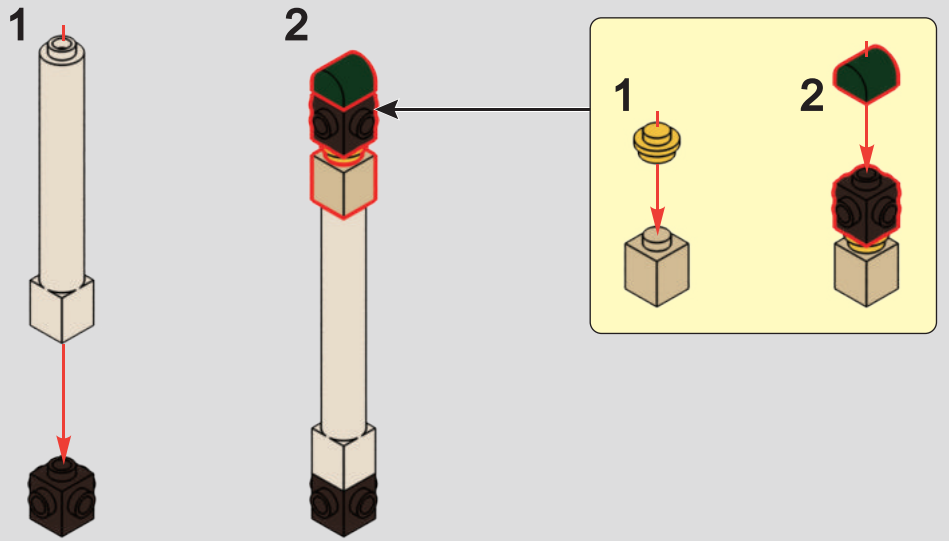

399



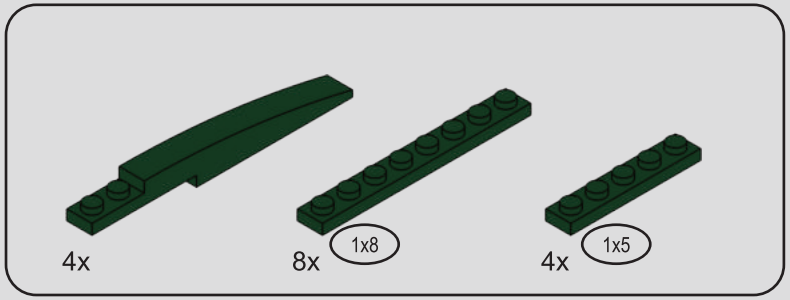

400

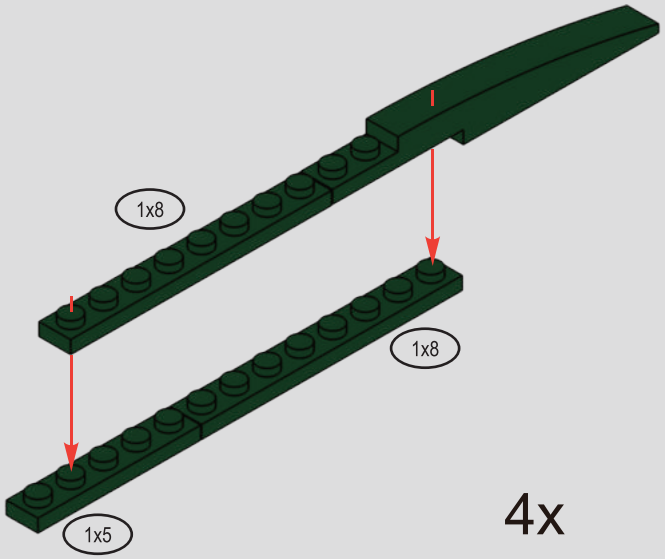

4x

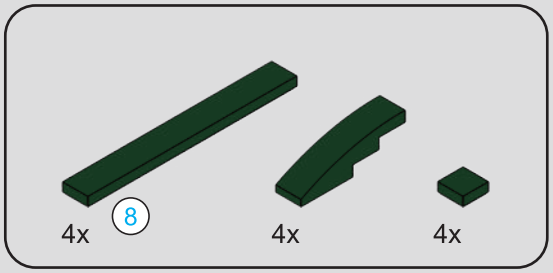



401

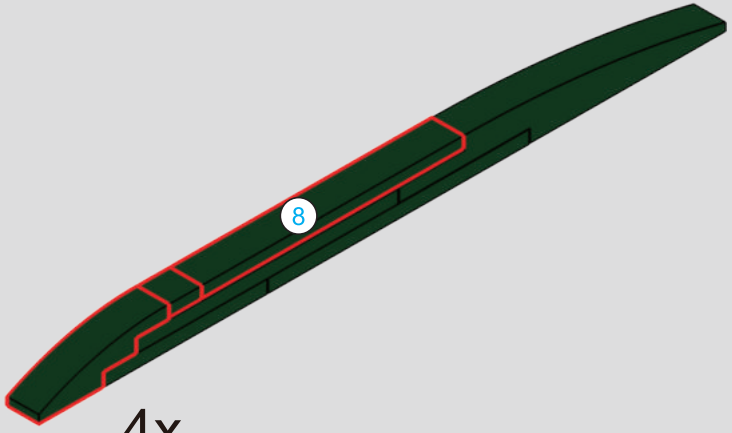

4x

402

1

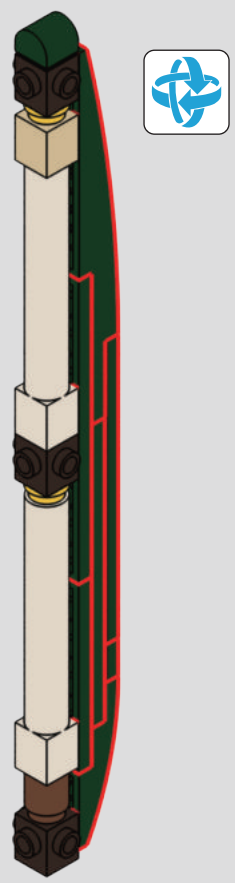

2



403



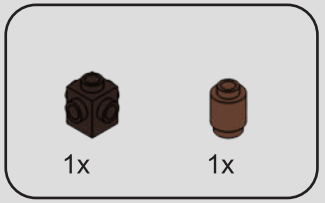

404



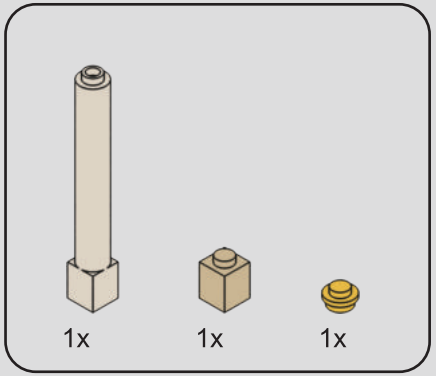

405

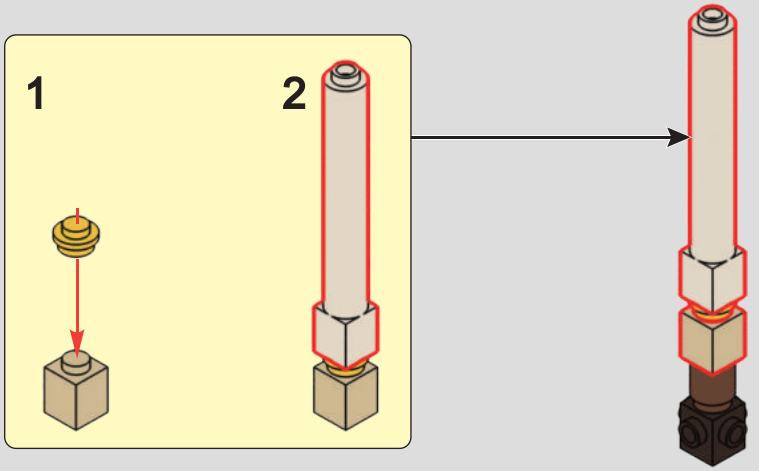

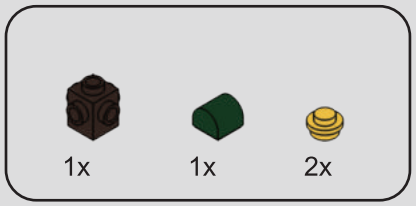

406

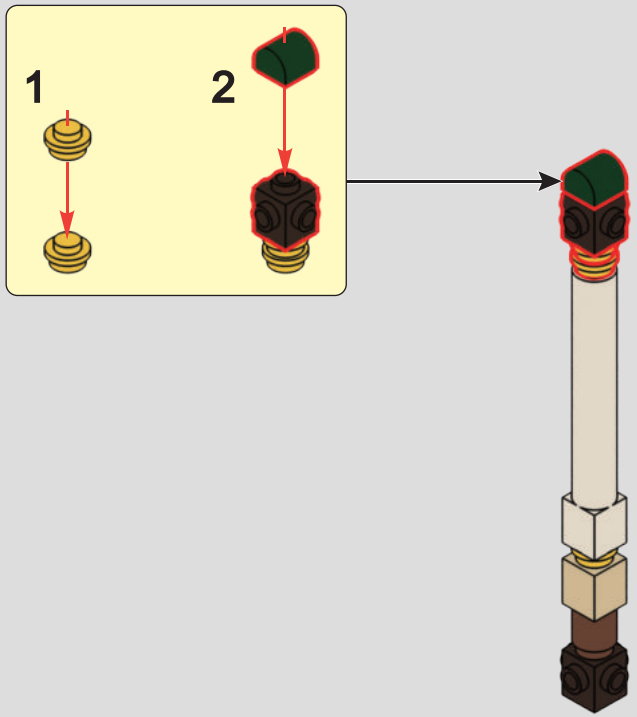

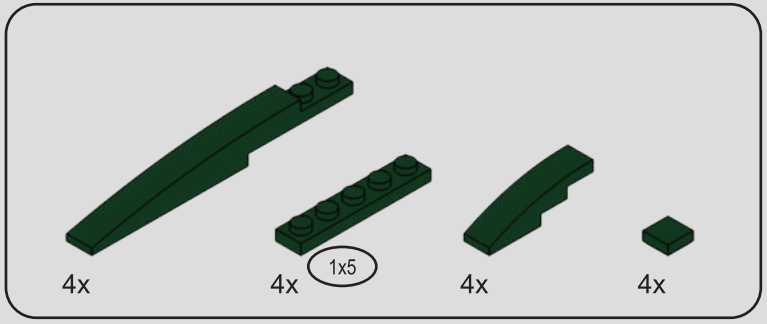

407

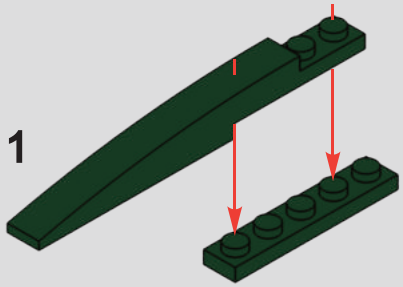

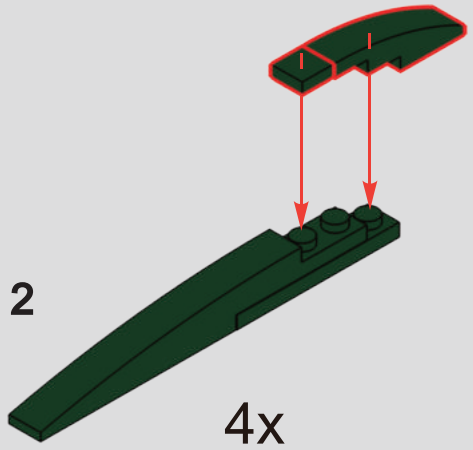

408

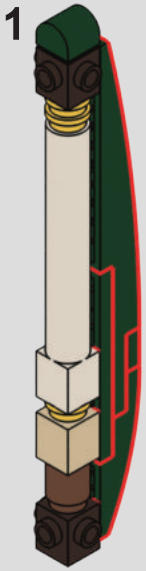

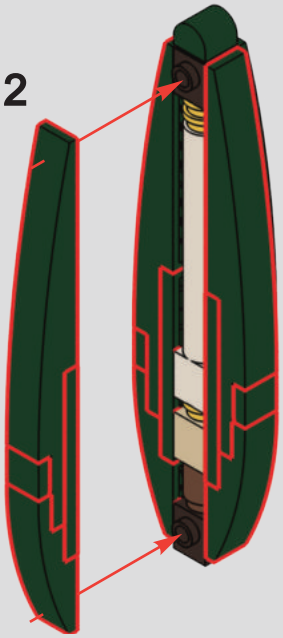

409



410



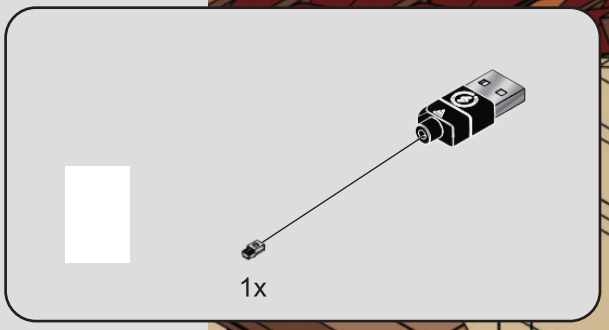

411

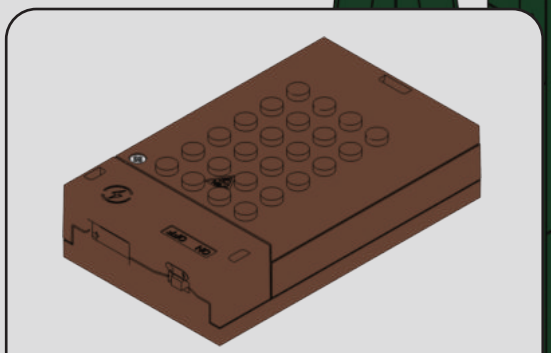

1x

412

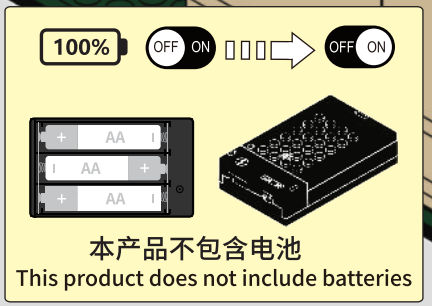

本产品不包含电池
This product does not include batteries

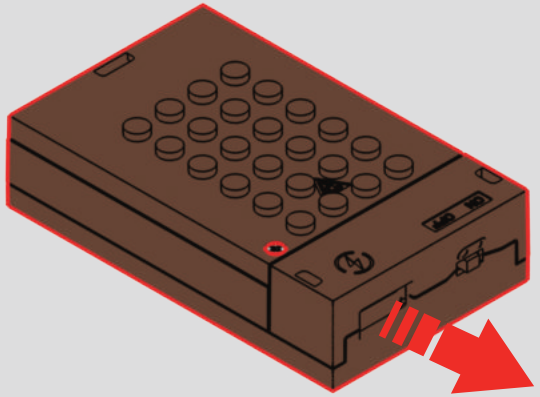



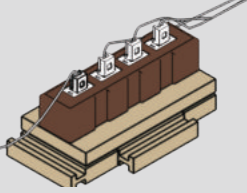

413

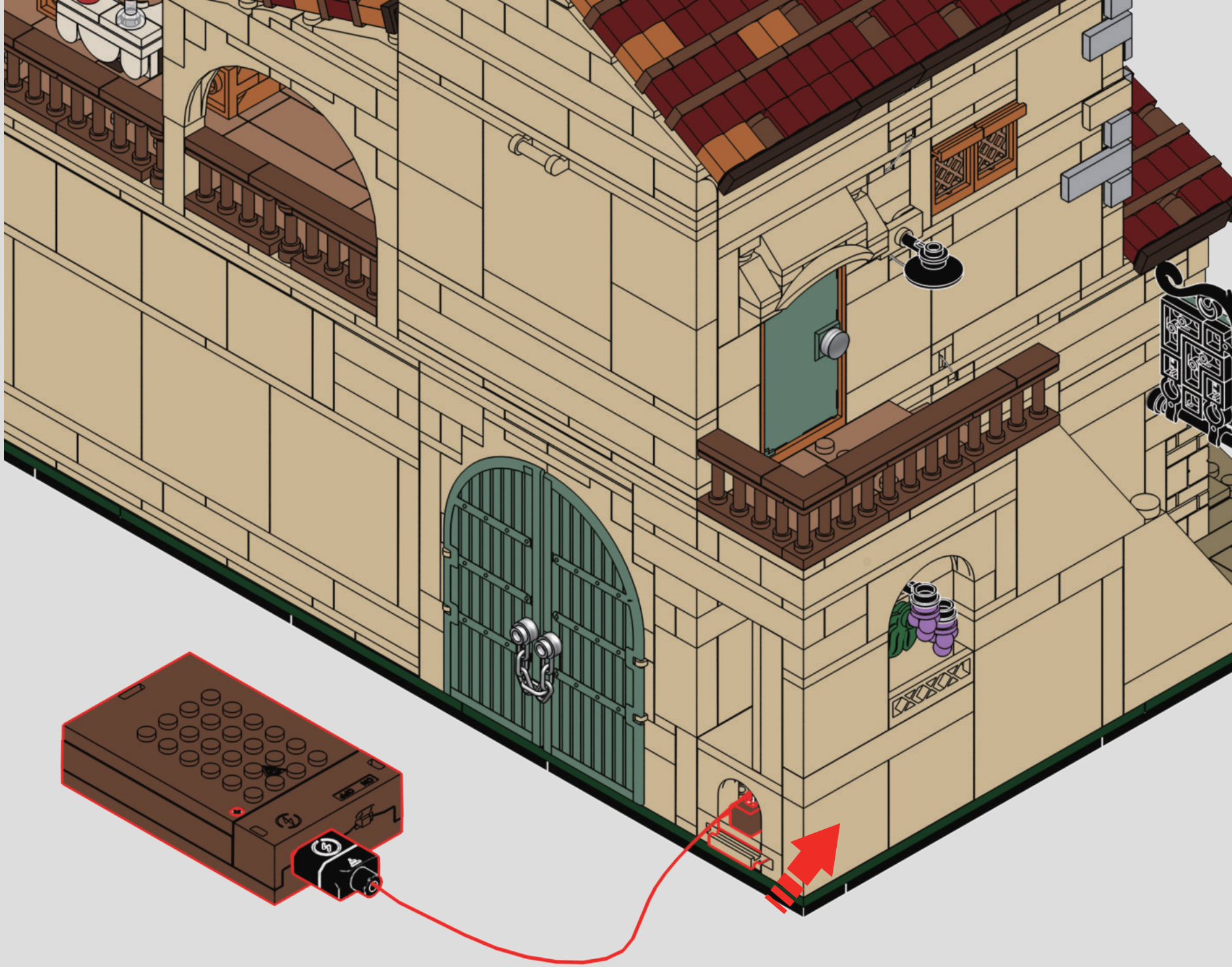

414

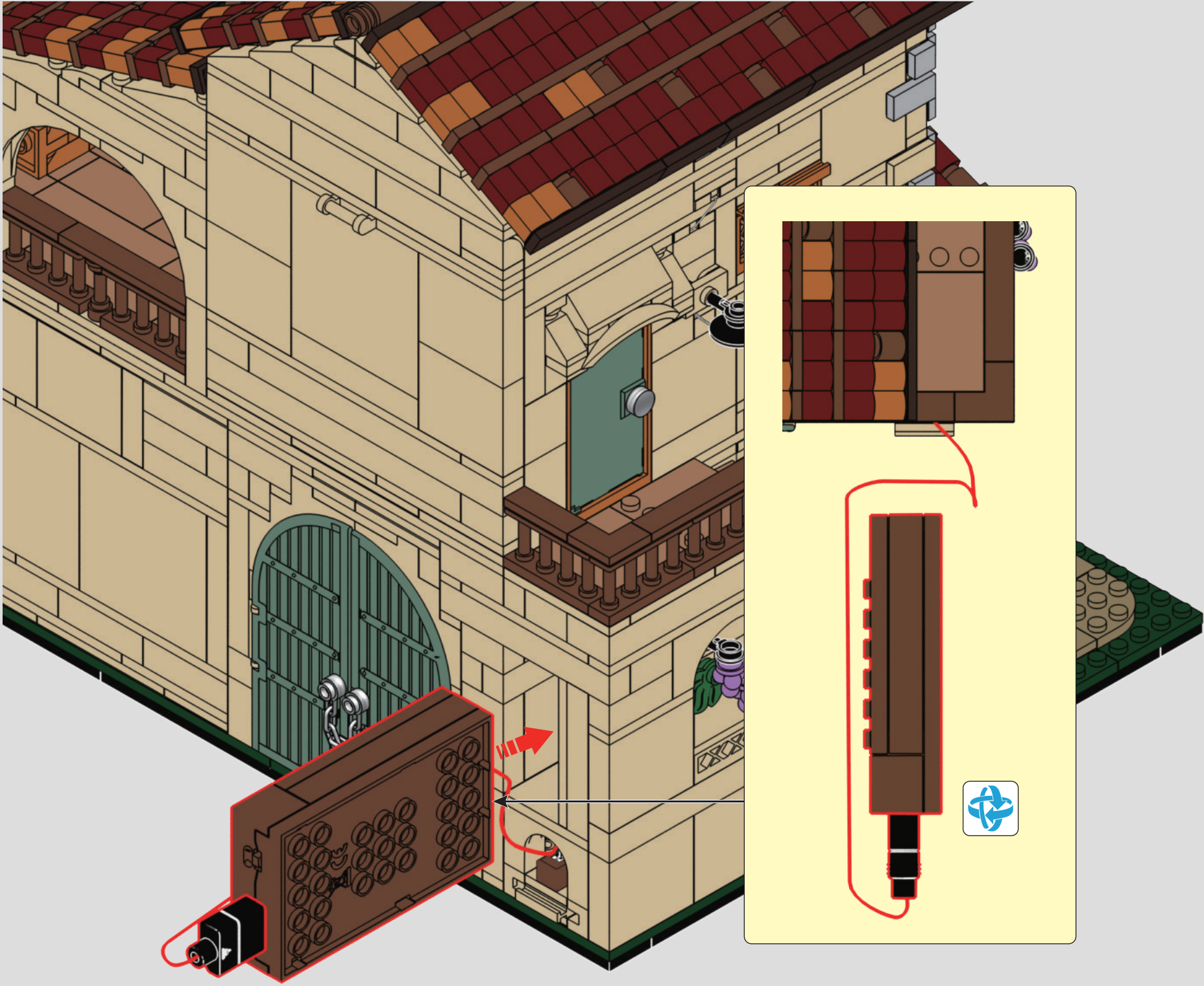

415

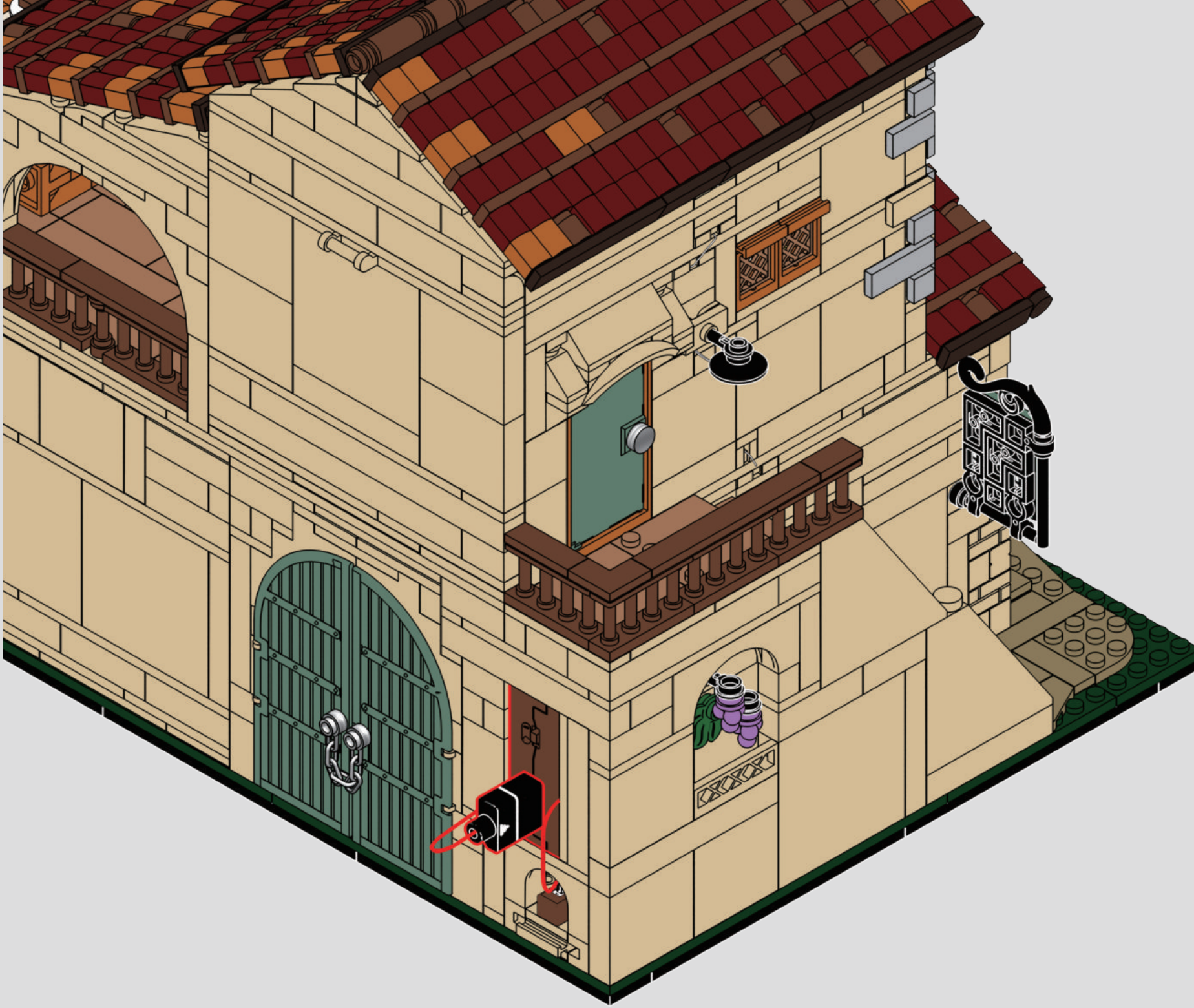


13

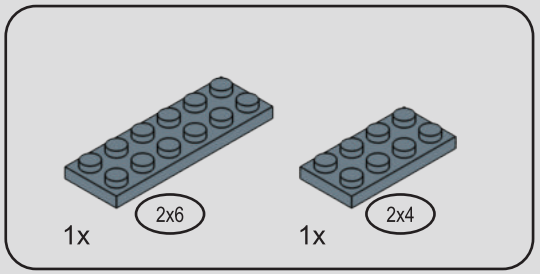

416

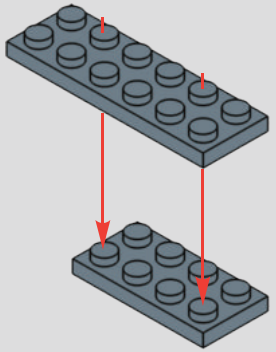

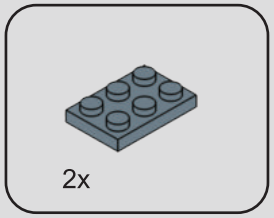

417

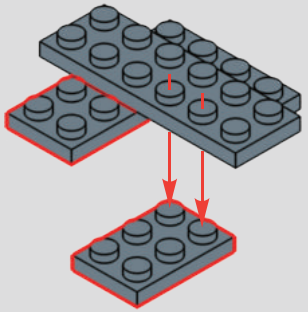

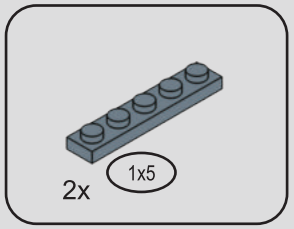

418

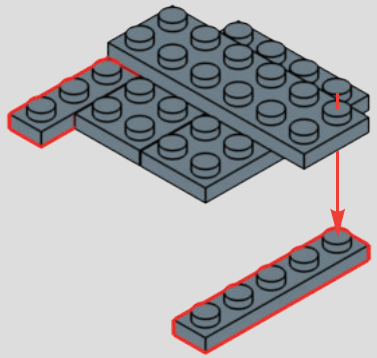

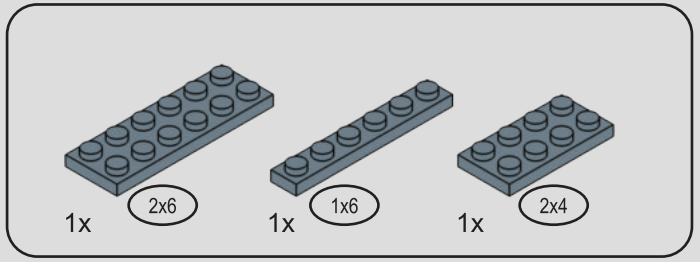

419

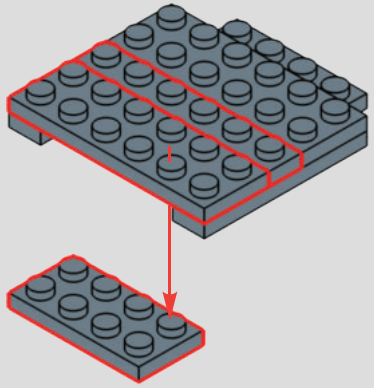

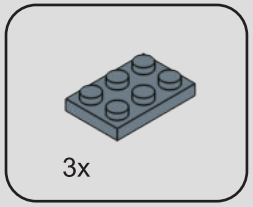

420

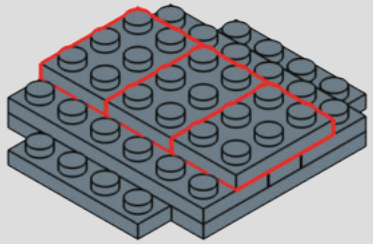

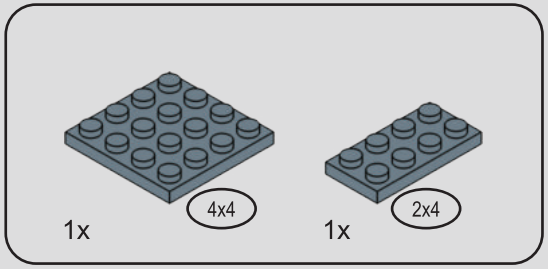

421

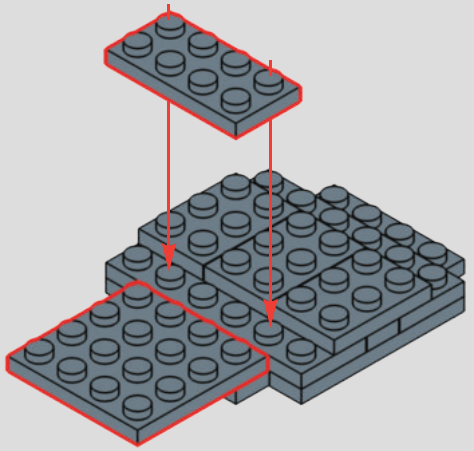

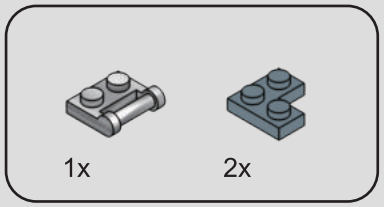

422

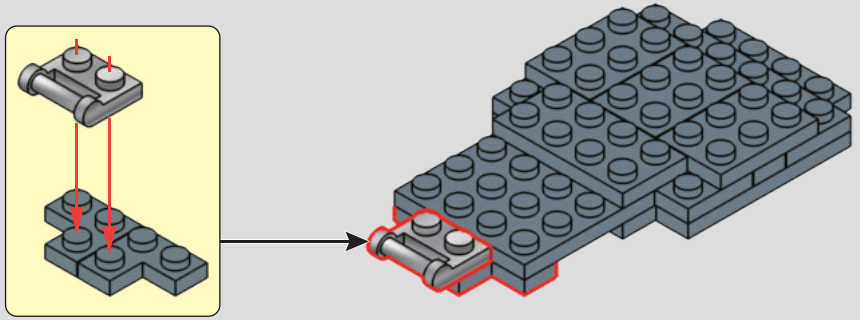

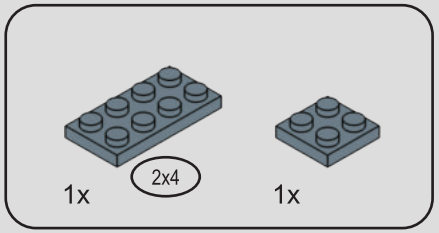

423

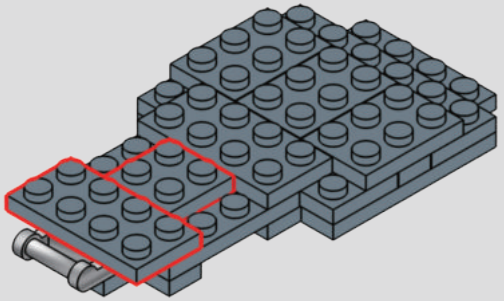

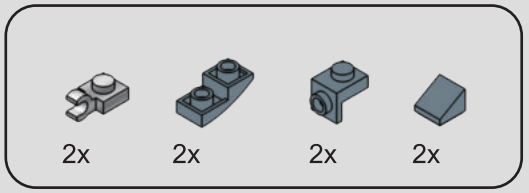

424

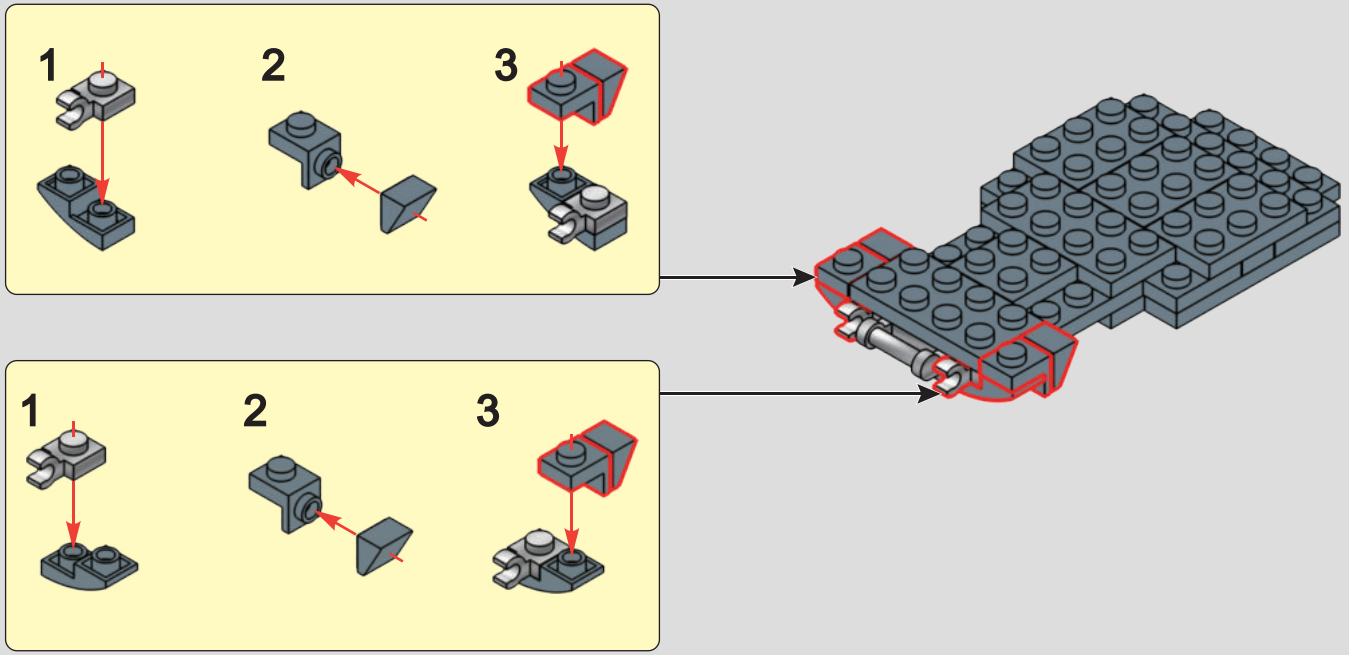

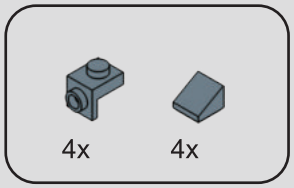

425

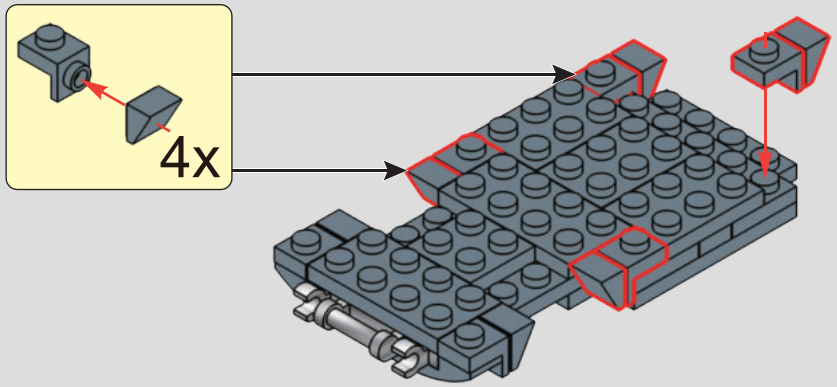

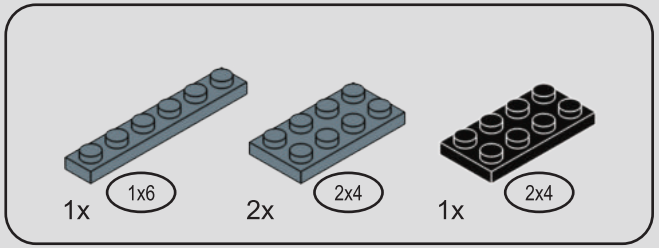

426

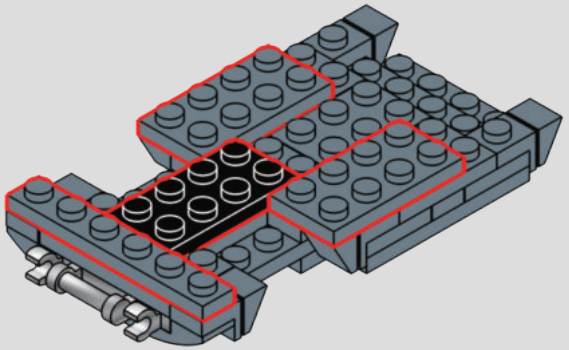

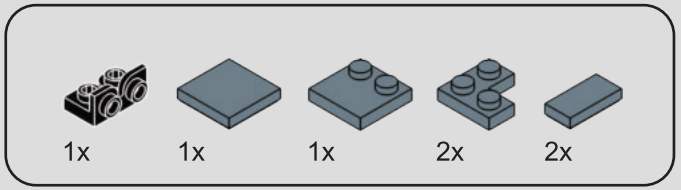

427

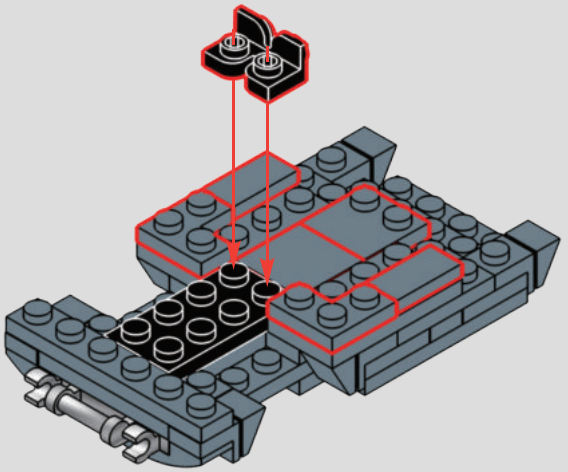

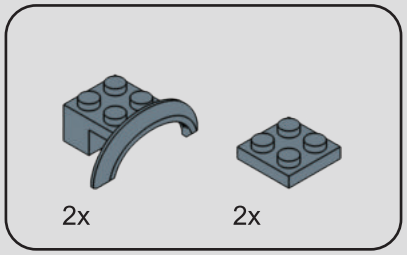

428

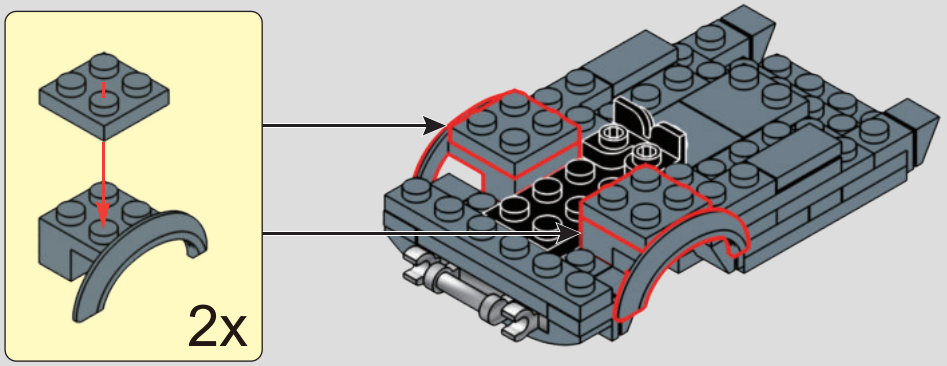

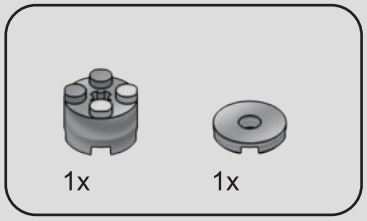

429

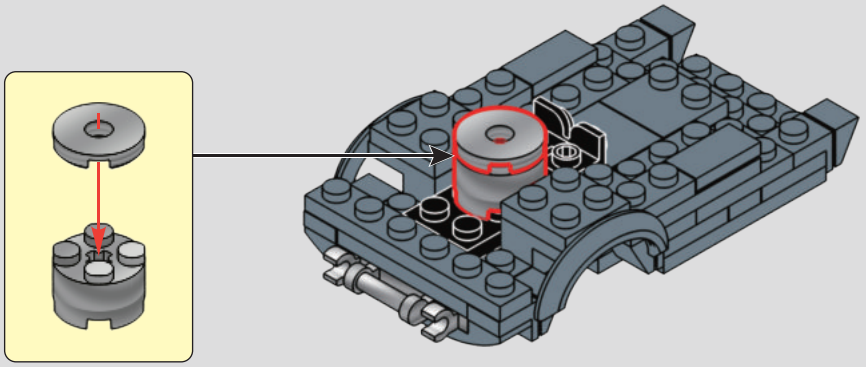

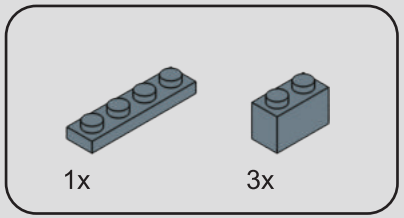

430

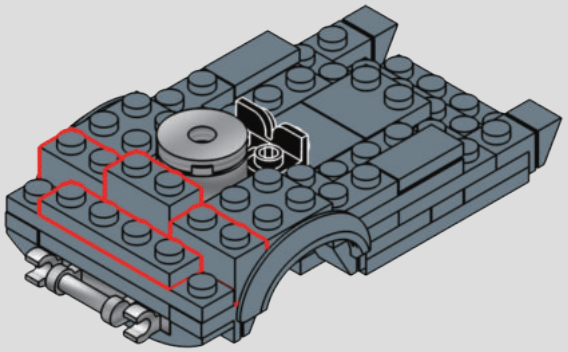

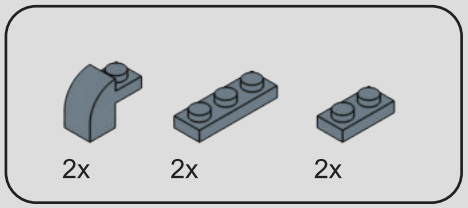

431

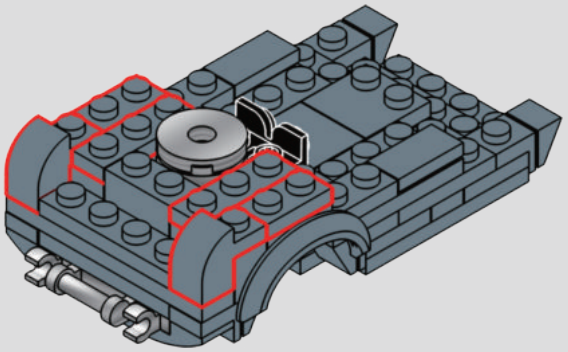

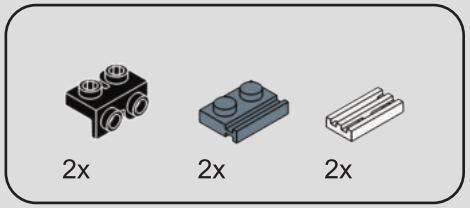

432

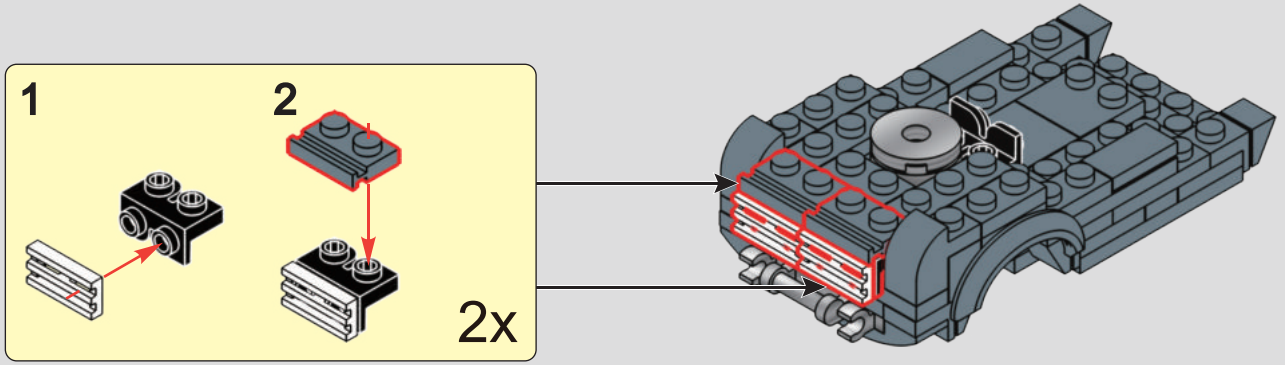

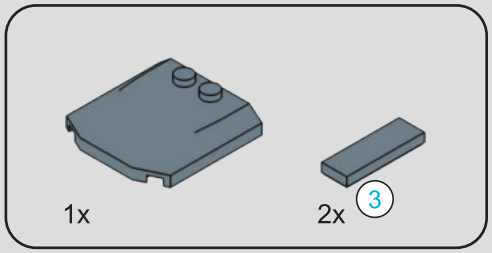

433

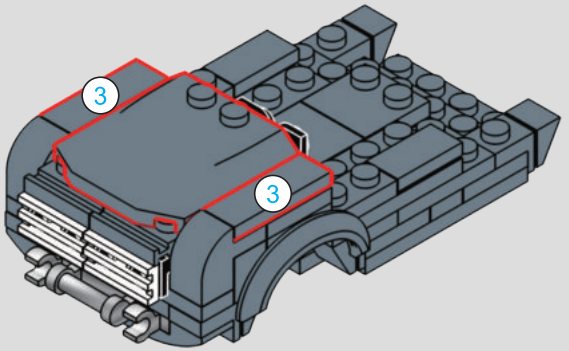

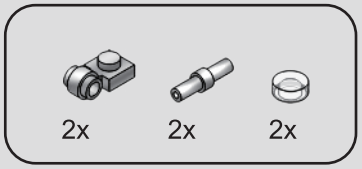

434

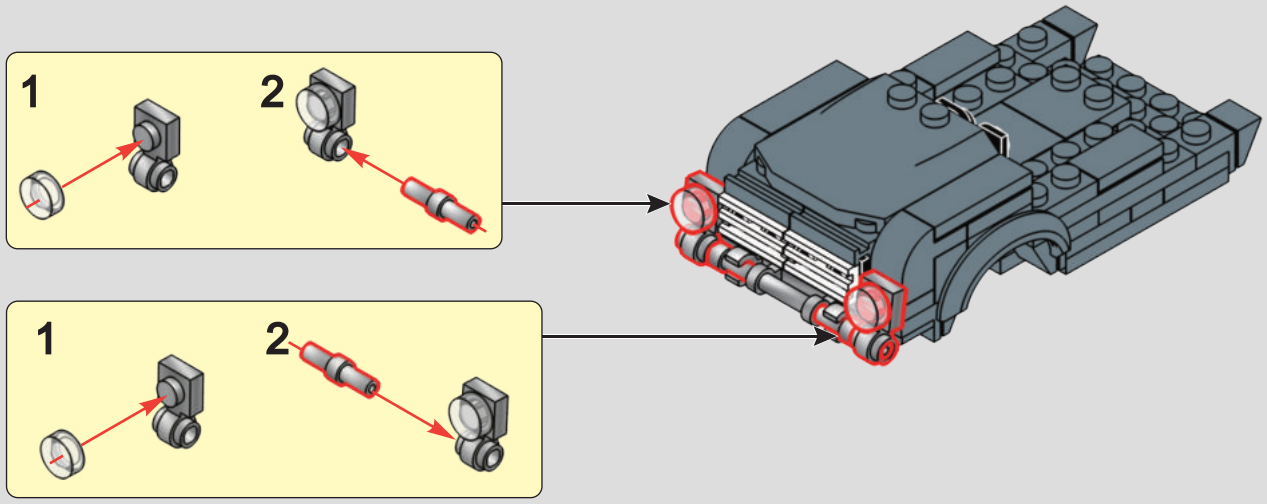

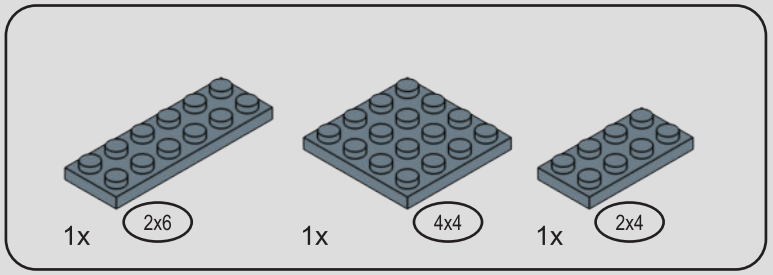

435

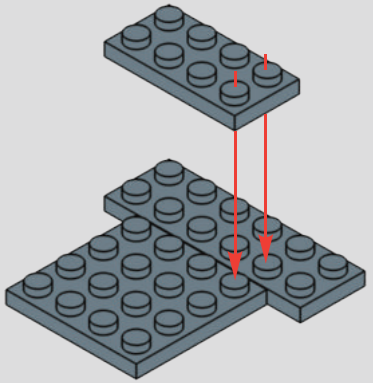

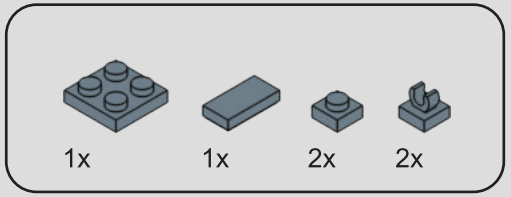

436

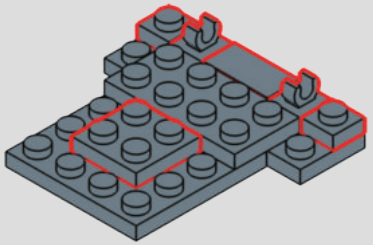

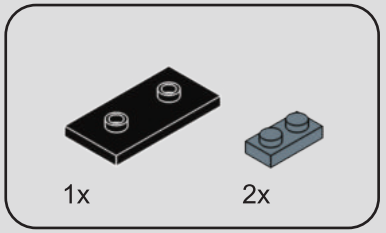

437

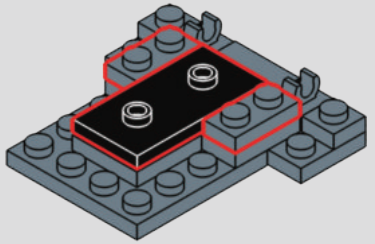

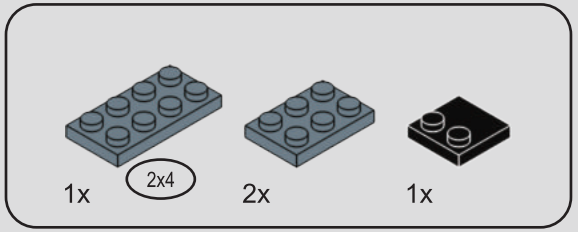

438

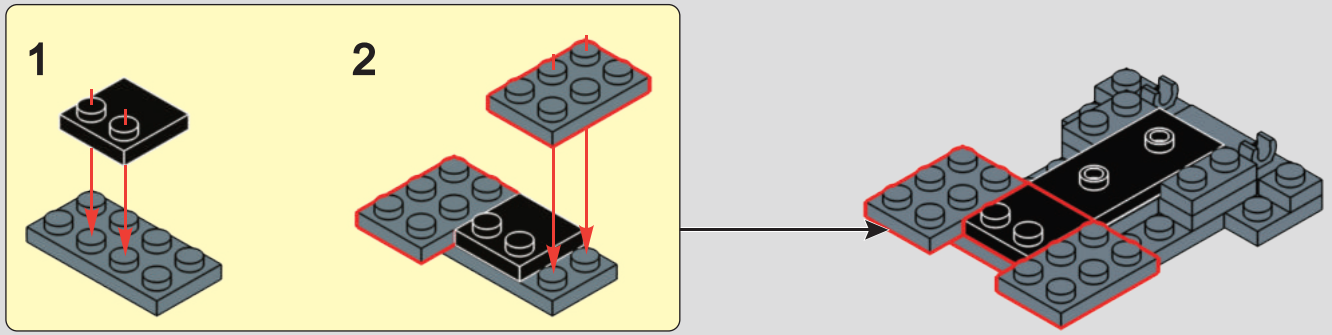

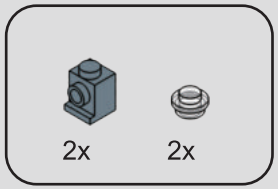

439

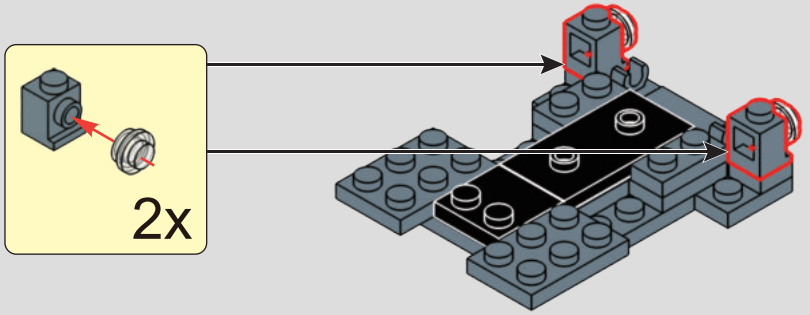

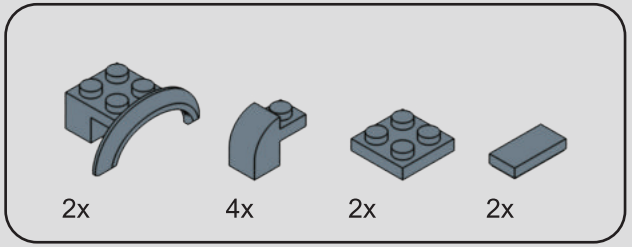

440

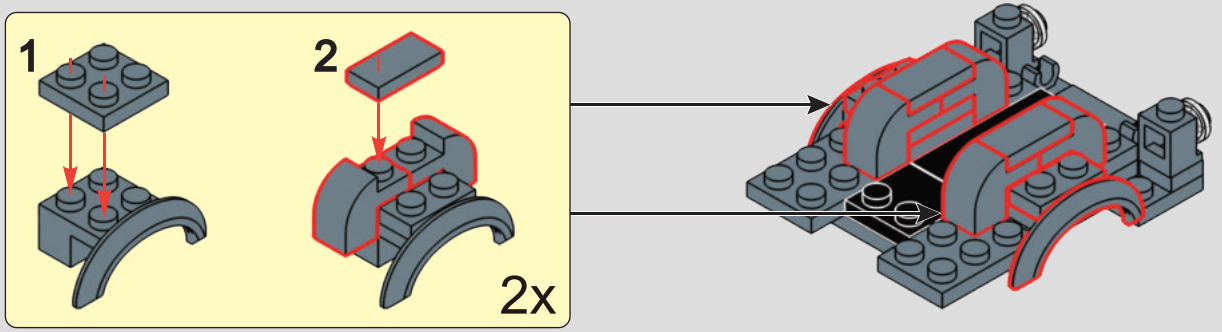

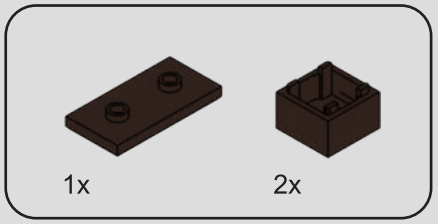

441

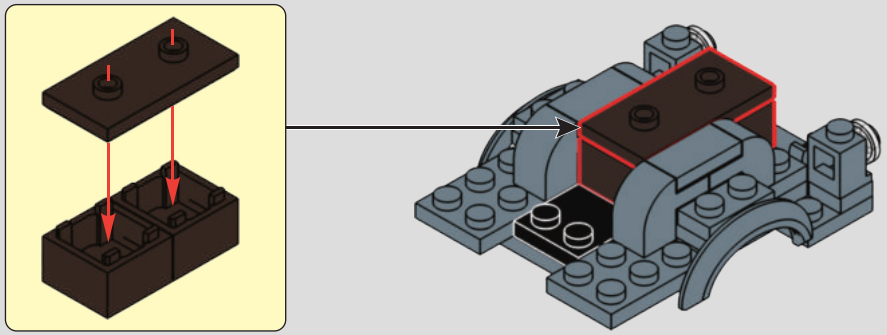

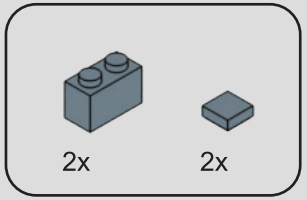

442

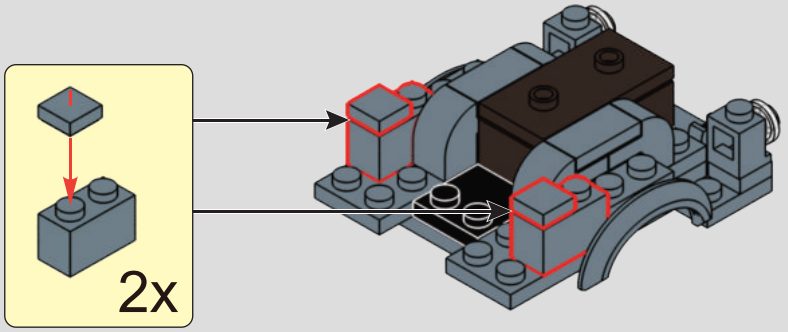

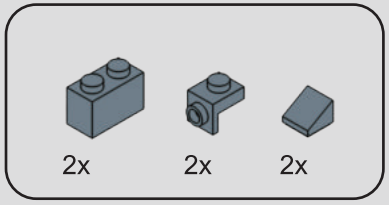

443

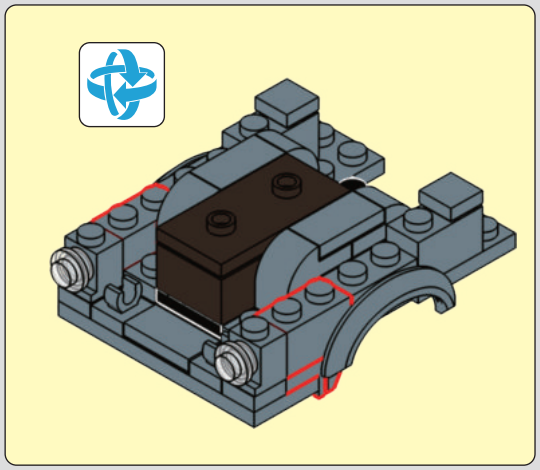

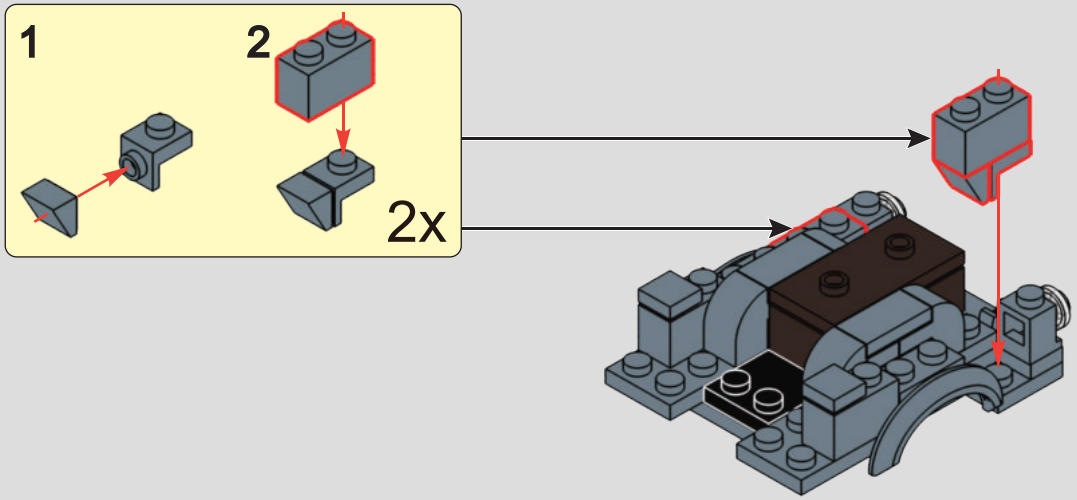

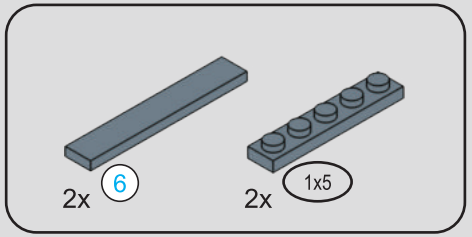



444

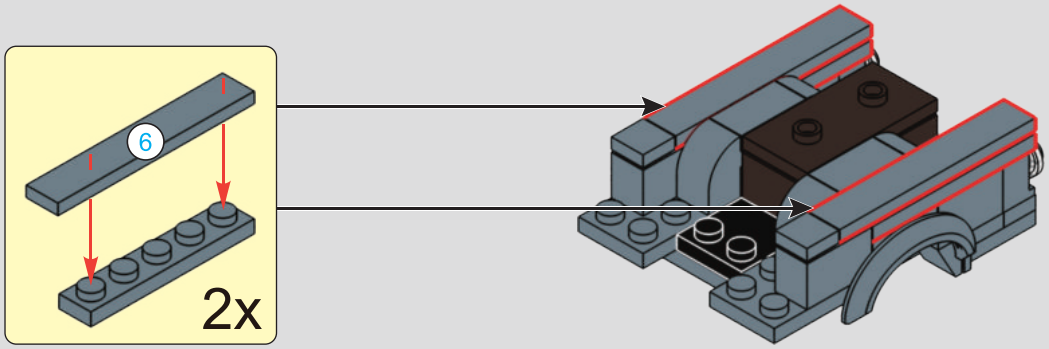

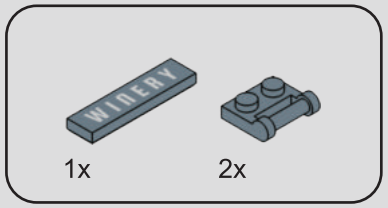

445

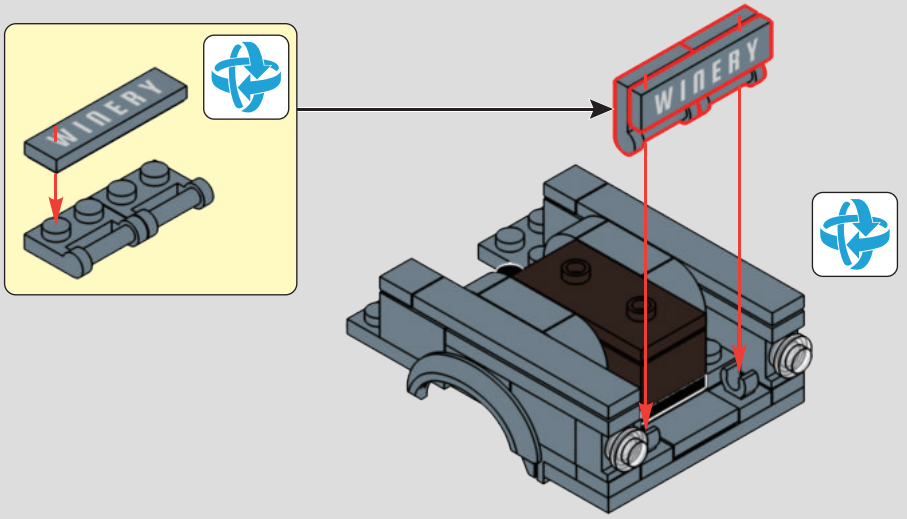

446

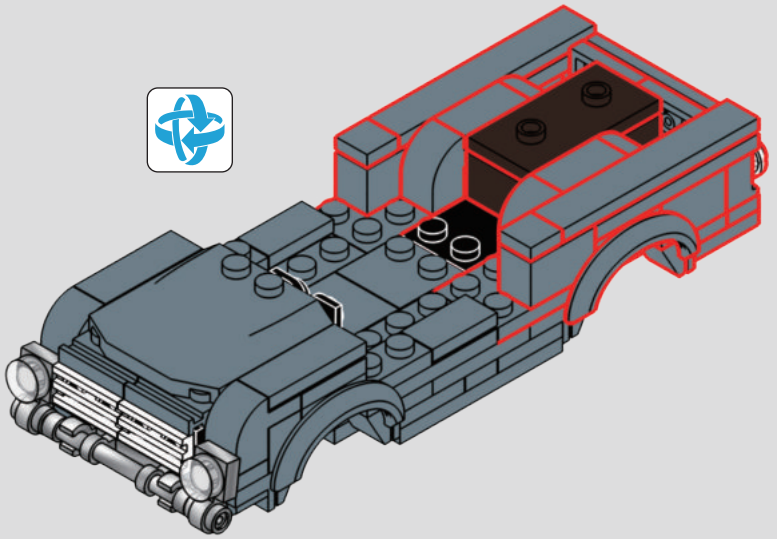

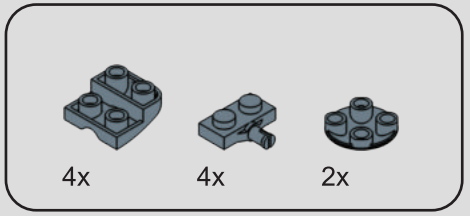

447

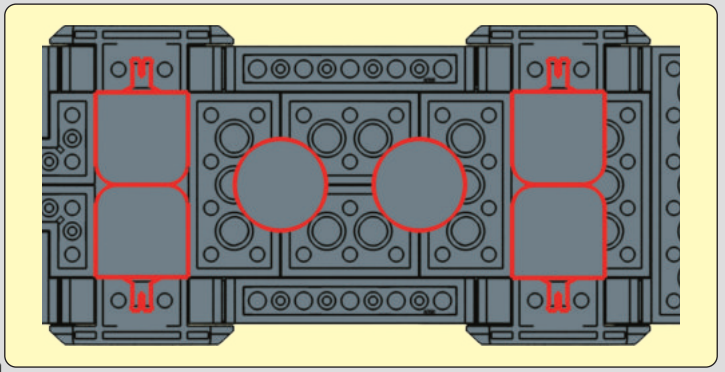

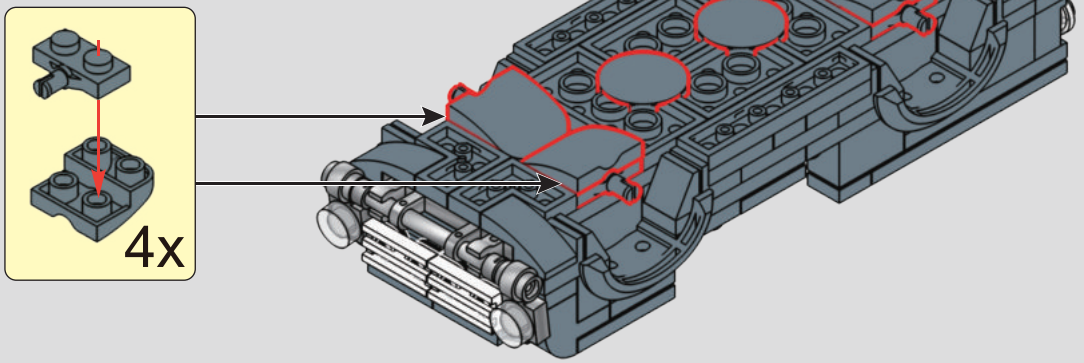

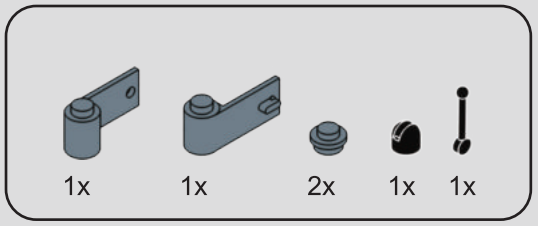

448

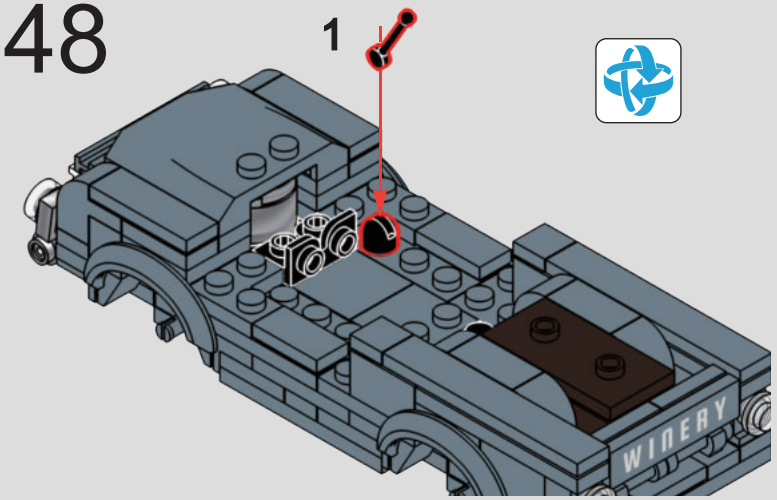

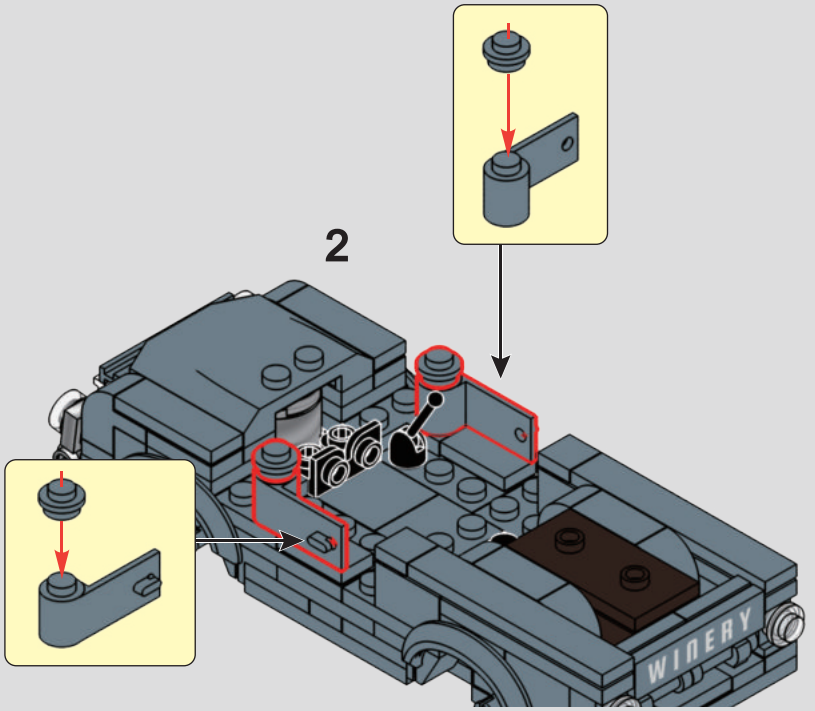

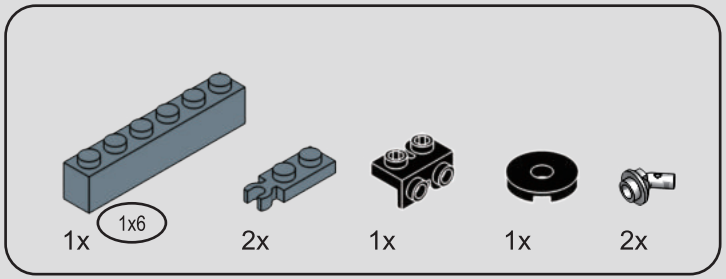

449

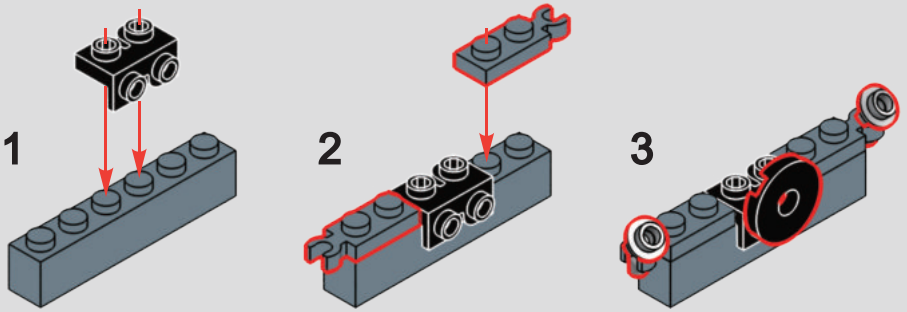

450

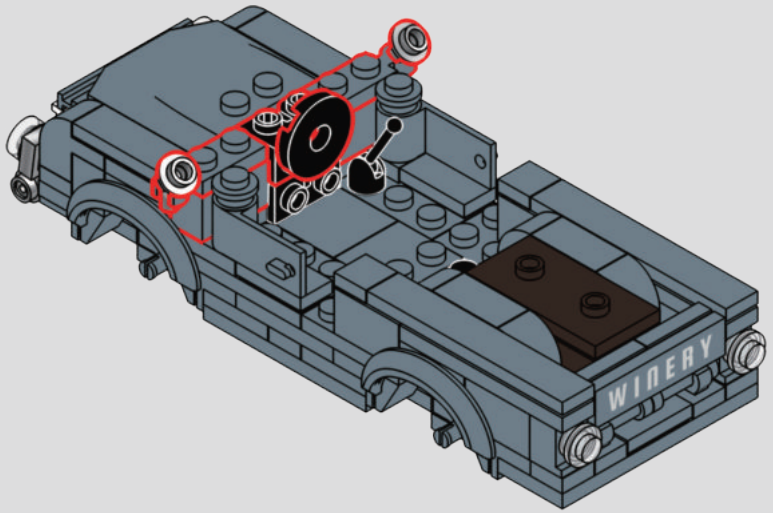



451

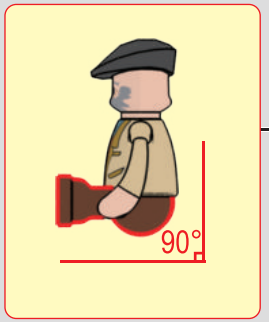

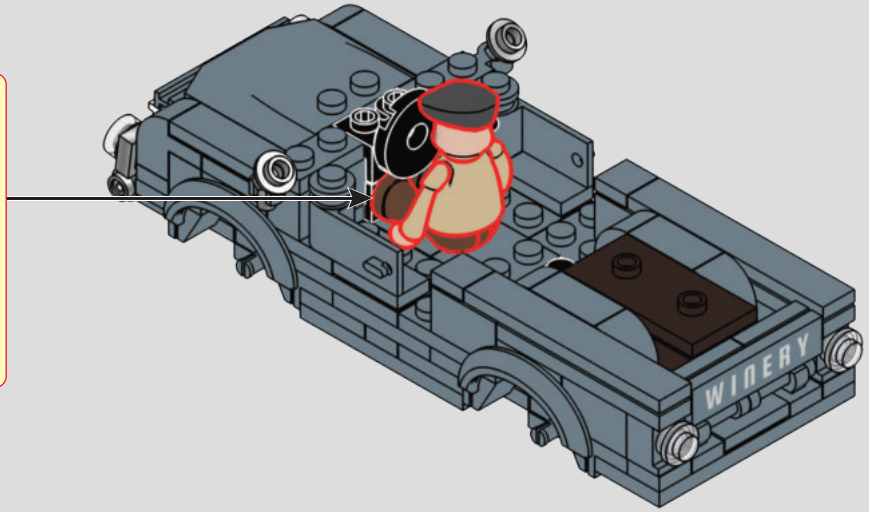

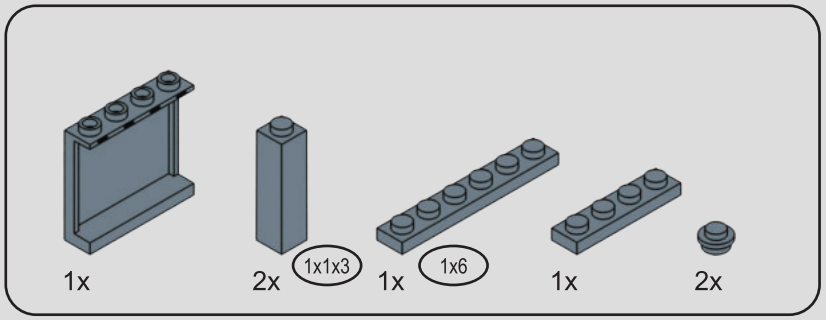

452

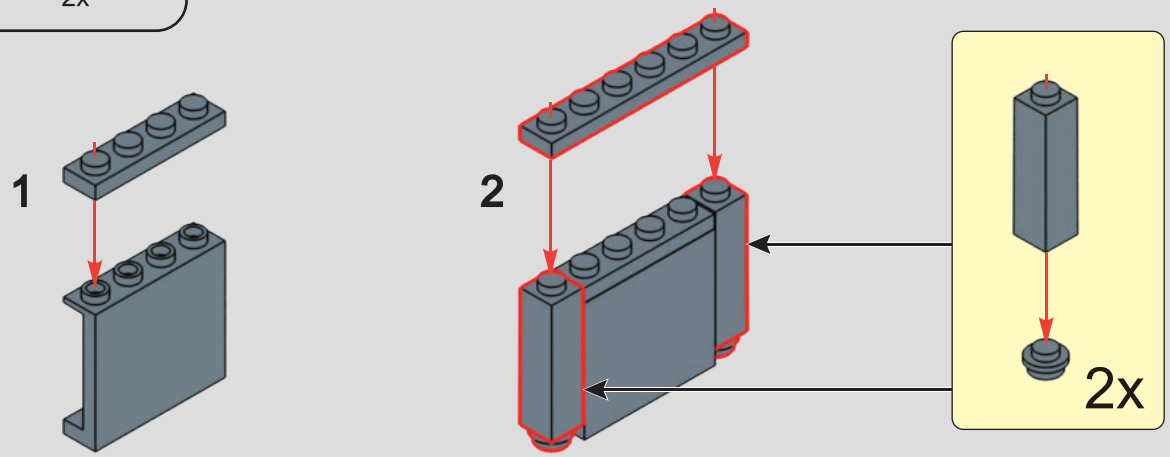

453

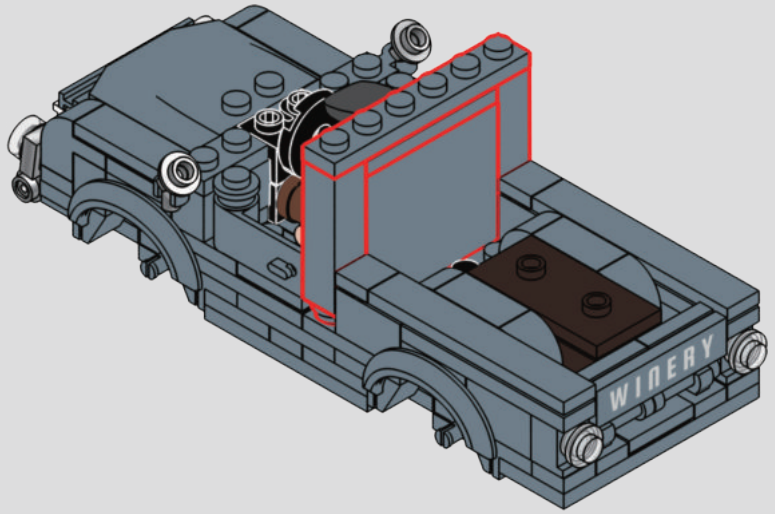

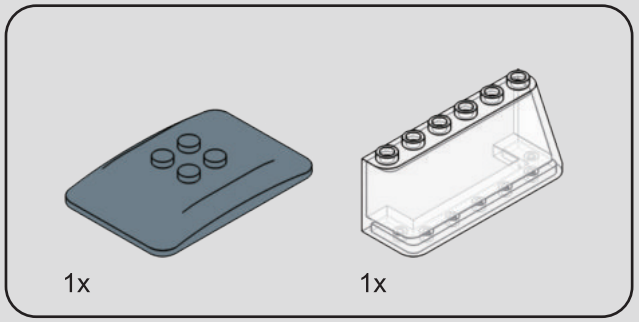

454

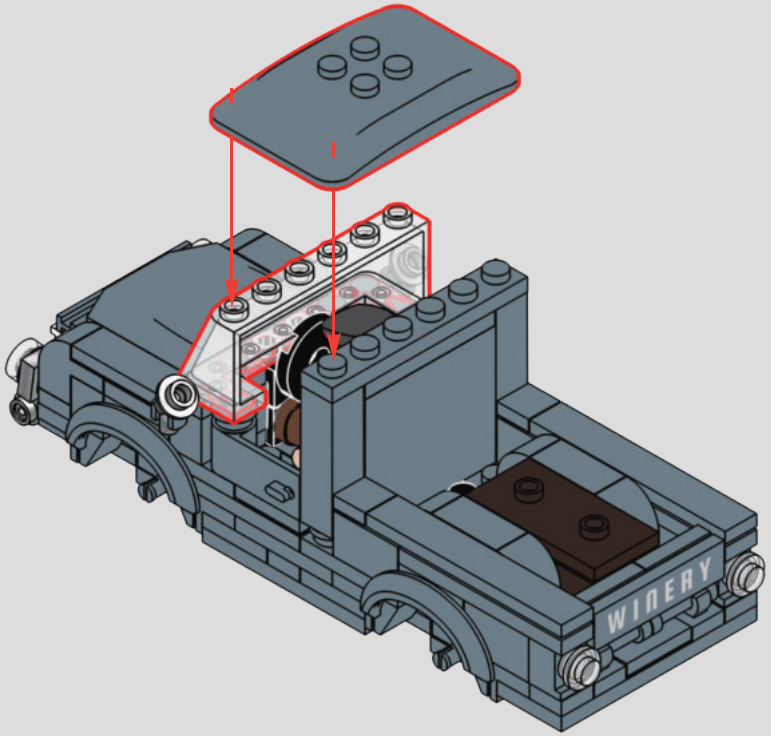

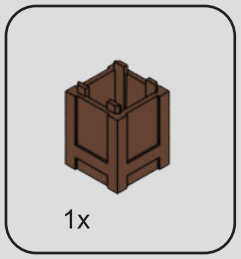

455

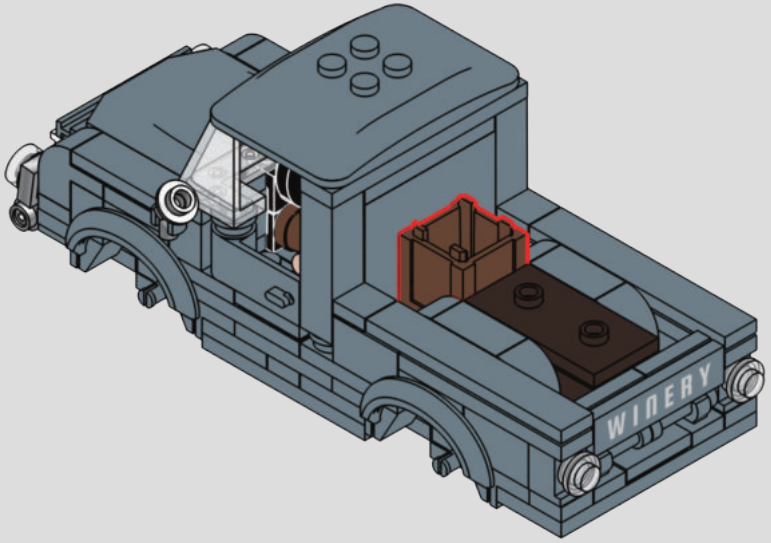

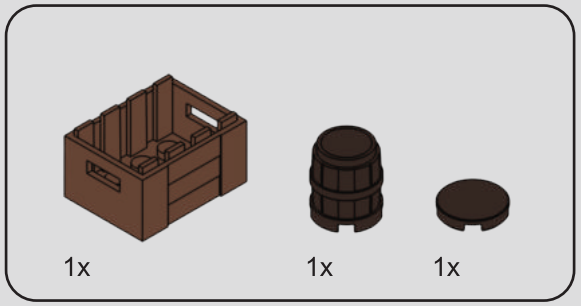

456

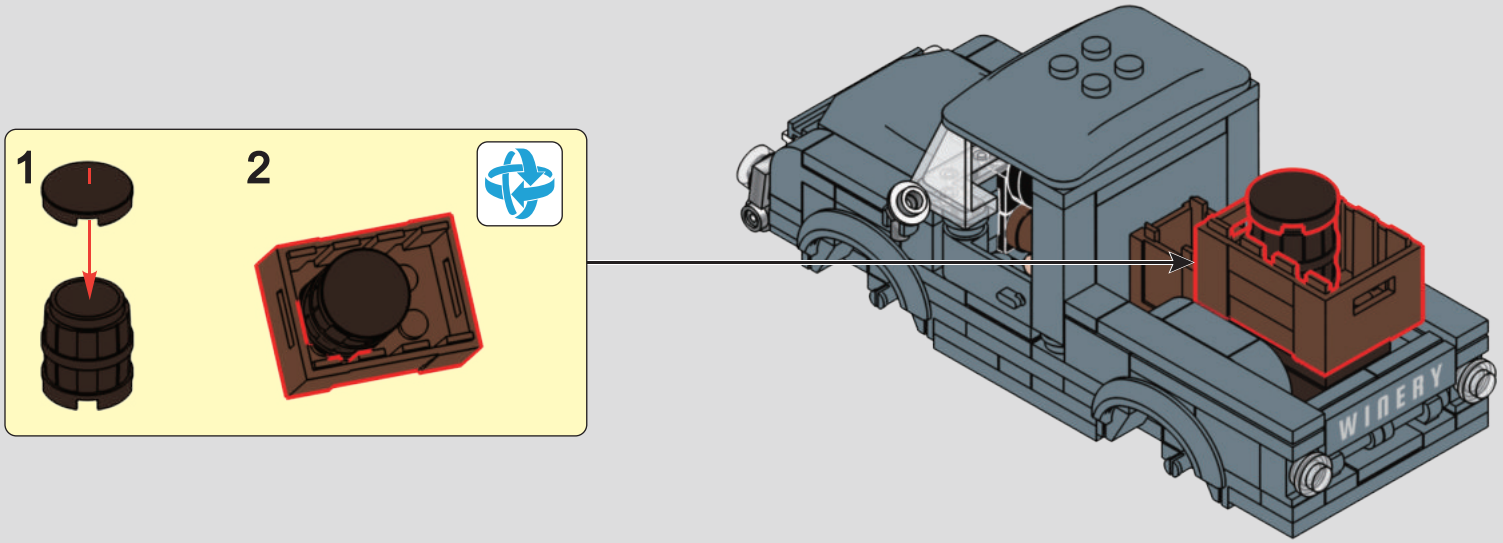

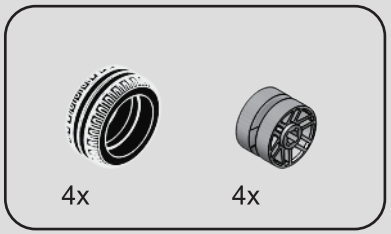

457

1

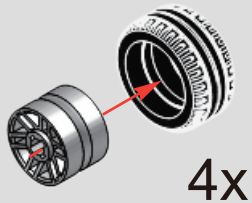

4x

2

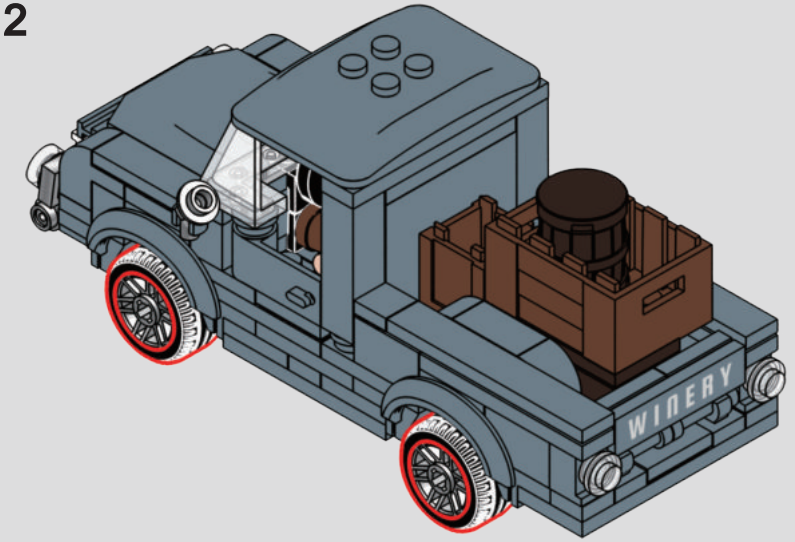

3

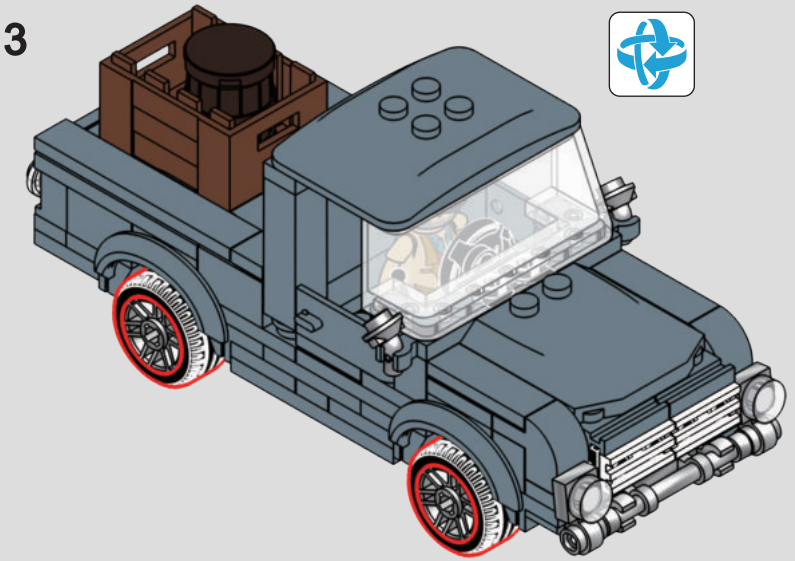

458

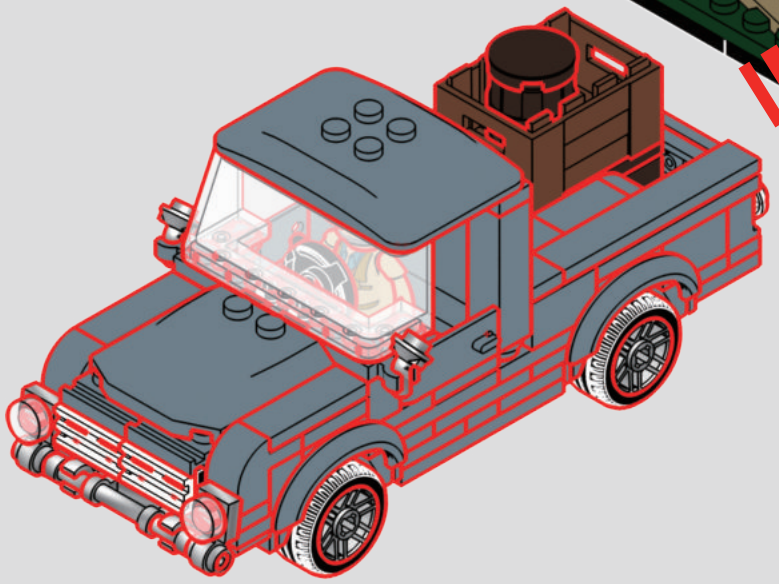



459





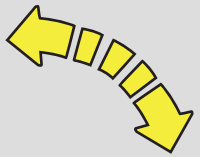



460

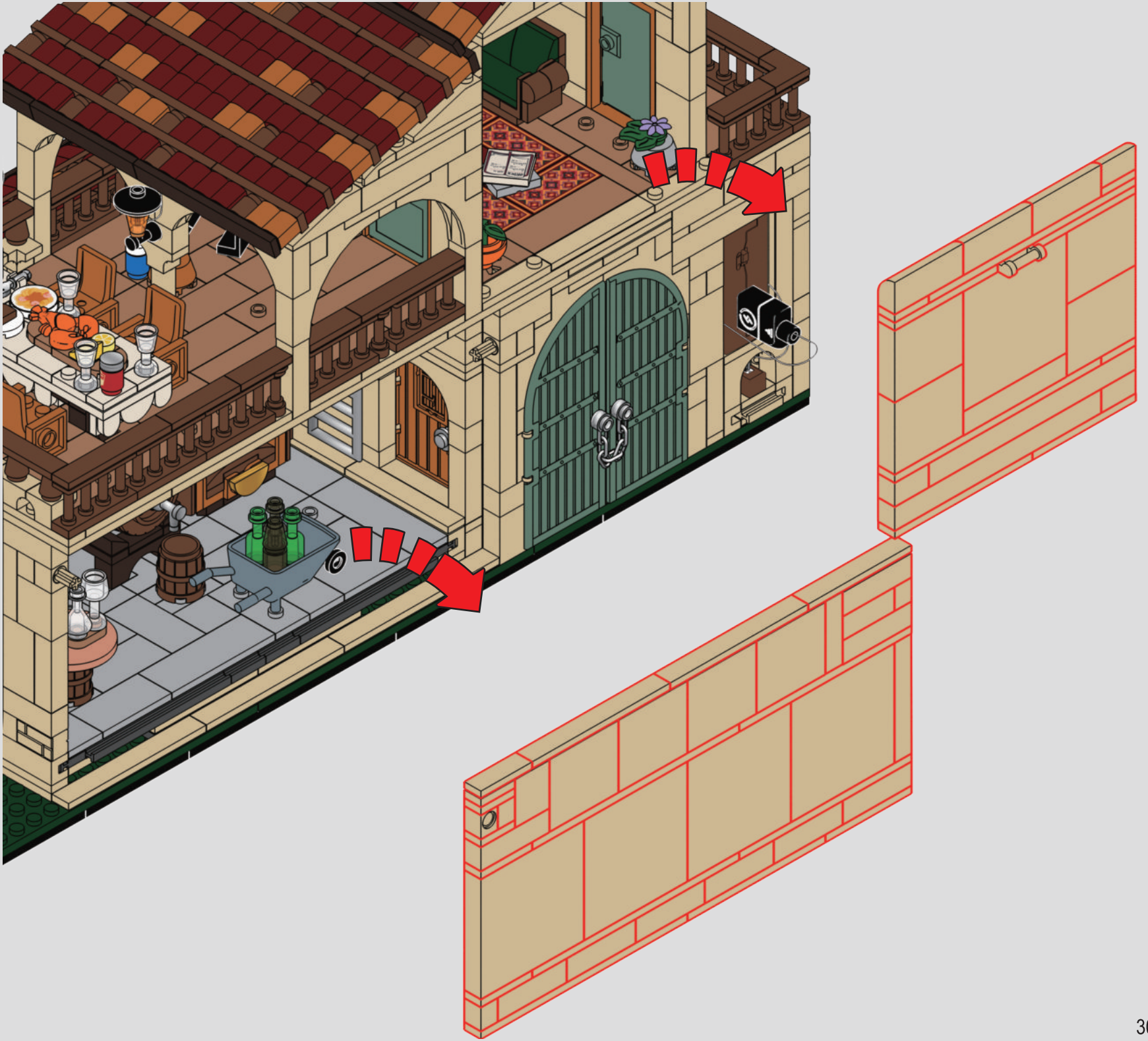

461



462



463



FARM LIFE

We would like your opinion on the new product you have just purchased. Your feedback will help shape the future development of this product series.
Please visit: https://www.lumibricks.com/pages/feedback
We sincerely hope you enjoy the product and we can't wait to see you again soon.Please let us know if we can do anything else to help!

农场生活系列

感谢您对本系列产品的喜爱与支持，如您在拼搭过程中遇到任何问题，均可通过微信扫描二维码联系企微客服寻求协助。
如果您还有其他意见或者建议，也请务必通过企微客服告知我们，期待与您的再次相遇！

企微客服



• FARM LIFE/农场生活系列



F9059
Home Greenhouse
家庭园艺温室



F9062
Bee Farm
养蜂场



F9080
Horse Stable
马厩



F9037
The Cow Barn
奶牛谷仓

• RETRO HOUSE/复古房屋系列



L9083
Waterfall Cabin
瀑布小屋



L9075
Bamboo House
竹林小屋



F9035
Moutain Cabin
山地小屋



F9018
Hunting Cabin
狩猎小屋

• THE OLD WEST/西部系列



F9057
General Store
西部杂货店



F9044
Old West Post Office
西部邮局



F9026
Old West Sheriff's Office
治安官办公室



F9021
Western Saloon
西部沙龙

V1.1

Lumibricks and Lumibricks logo are trademarks of the Lumibricks group.

WWW.LUMIBRICKS.COM

如果您遇到任何问题，请通过以下方式与我们联系：

天猫 小红书

lumibricks灯搭官方旗舰店

会员中心