F.O
DELIGHT
DAY AND NIGHT
F9036
1524PCS
16+
FREIGHT
FREIGHT
Scan the QR code
for a PDF instruction
FREIGHT TRAIN
OLD WEST

ABOUT FUNWHOLE

'FUNWHOLE' is a combination of the words "fun" and "whole", meaning "the whole fun of both day and night".

Founded in 2014, based on the desire to fully express the whole beauty of bricks (in day and night), FUNWHOLE is the world's first lighting bricks manufacturer.

FUNWHOLE is dedicated to the lighting bricks product, with a combination of bricks and lights. FUNWHOLE was birthed out of lights and bricks, allowing lights shine through your bricks and bring your night bricks to life.

As the pioneer to bring the first lighting bricks, FUNWHOLE was created to bring back brightness to the night world, making day and night whole with the lighting fun.

Engaged in building a creative brand, brick by brick, light by light, FUNWHOLE strives to bring fun and joy to millions of people.

FUNWHOLE creates more than bricks but also makes the lights shine through bricks, hoping every building brick lover can enjoy the beauty of lighting!

36
FREIGHT

TO CITY-DESERT JUNCTION-GOLDWOOD

INSPIRATION

It was their final hurrah 'fore callin' it quits—a grand heist to relieve the train of a wealthy tycoon's treasure. Bandit Bill and his posse, once the undisputed rulers of the West, were now the most wanted men, scattered to the winds in the chase. Bandit Bill, impatient and desperate, decided to go it alone. The train thundered down the tracks, and in the distance, he spied the familiar silhouettes of cowboy aboard. Would Bandit Bill pull it off?

Born from the guts of the original 4-4-0 Steam Locomotive, climb aboard, feel the rumble of the engine!

Engineer

And meet our lifeline: the watertower. It's our guardian against fires on these tracks, keeping us safe in the wild west.

This here stove is where we burn the coal that powers them iron horses rollin' down the tracks.

Fireman

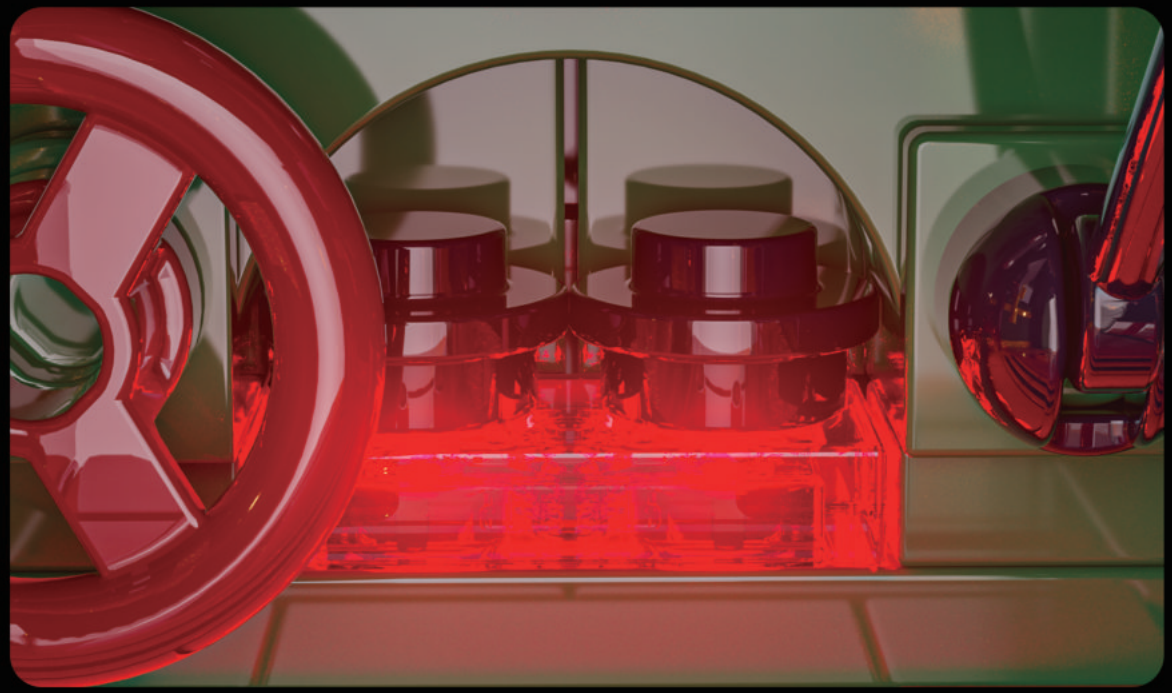

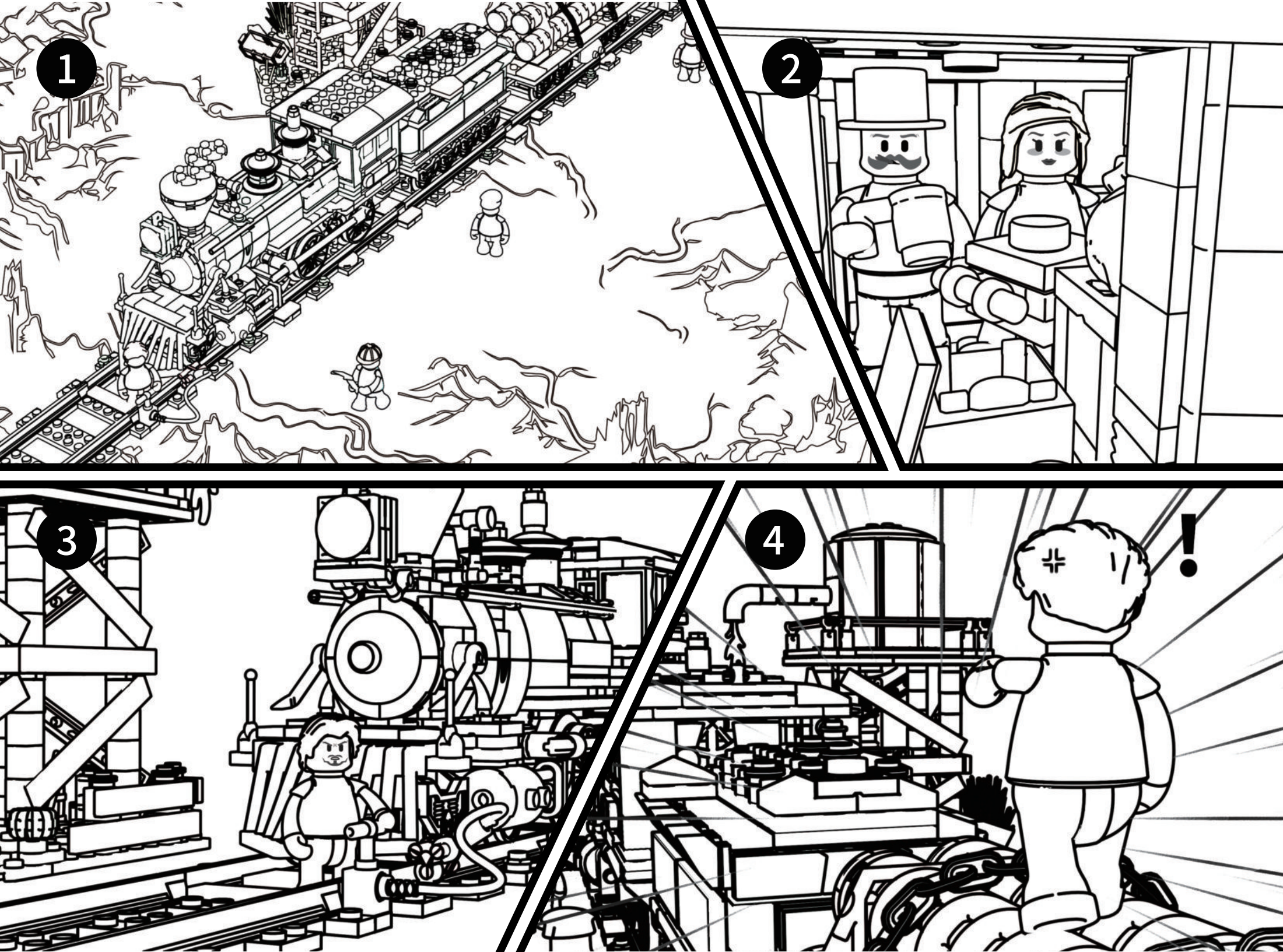
1
2
3
4
!

WHAT'S INCLUDED

Please check and make sure you get all the items listed below.

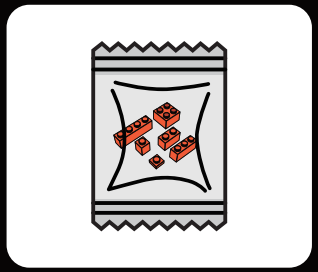

Building Bricks

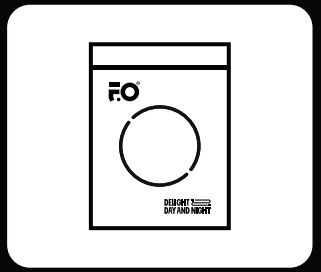

LED Light Kit

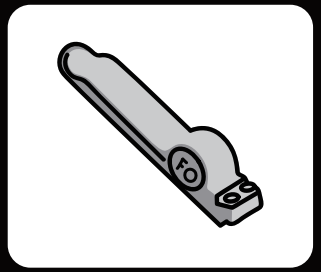

Brick Separator

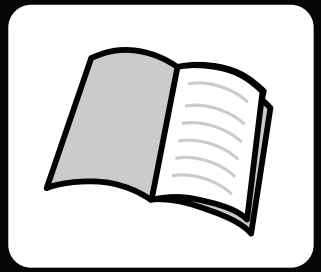

User Manual

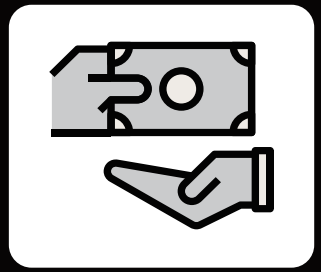

Service Card

TROUBLESHOOTING

The small size of lighting accessories makes them susceptible to damage during installation, and the following issues are common causes of failure.

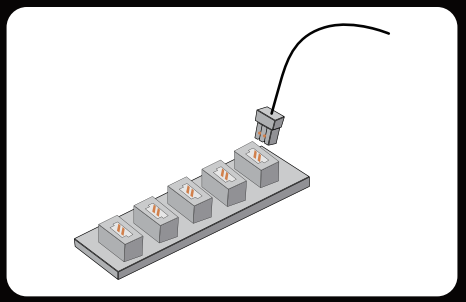

1.Ensure that the connectors are correctly installed as shown in the picture.

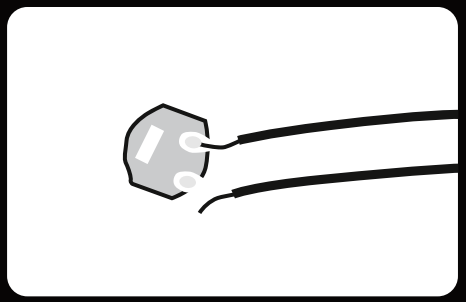

2.Check if the wires are disconnected or broken from the solder joints.

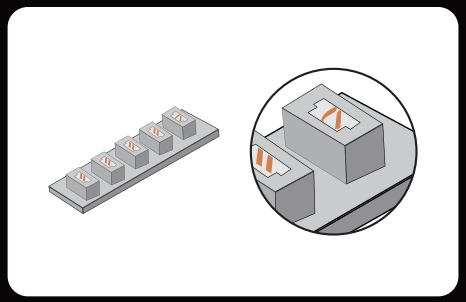

3.Check the internal pins of the connector sockets. The internal pins of a properly working connector port should be straight. If the small pins are bent, they may be considered faulty ports.

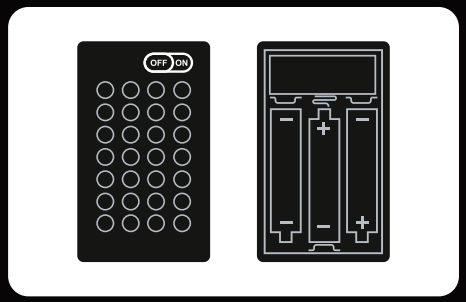

4.Check that the power switch on the battery box is on and that the "+" and "-" poles of the battery are correctly placed (using new batteries) and ensure that the upper and lower connections to the "+" and "-" poles of the power switch are installed correctly.

If you have checked each string of lights according to the guide above and the lights still do not light up, please contact our customer service for assistance.

SAFETY PRECAUTIONS

1. Before use, please make sure to check the voltage to avoid damage to the product and potential safety hazards.
2. The lights in the product are not replaceable. If they are damaged or not lighting up, please refer to the troubleshooting section or contact our customer service for assistance.
3. Avoid pulling on the light connection wires as this may cause damage.
4. Do not expose the product to water as it may damage the product.
5. Please read and follow the instructions carefully during building to ensure a good building experience.
6. This product doesn't come with batteries, but the power bank can also power LED light kits.

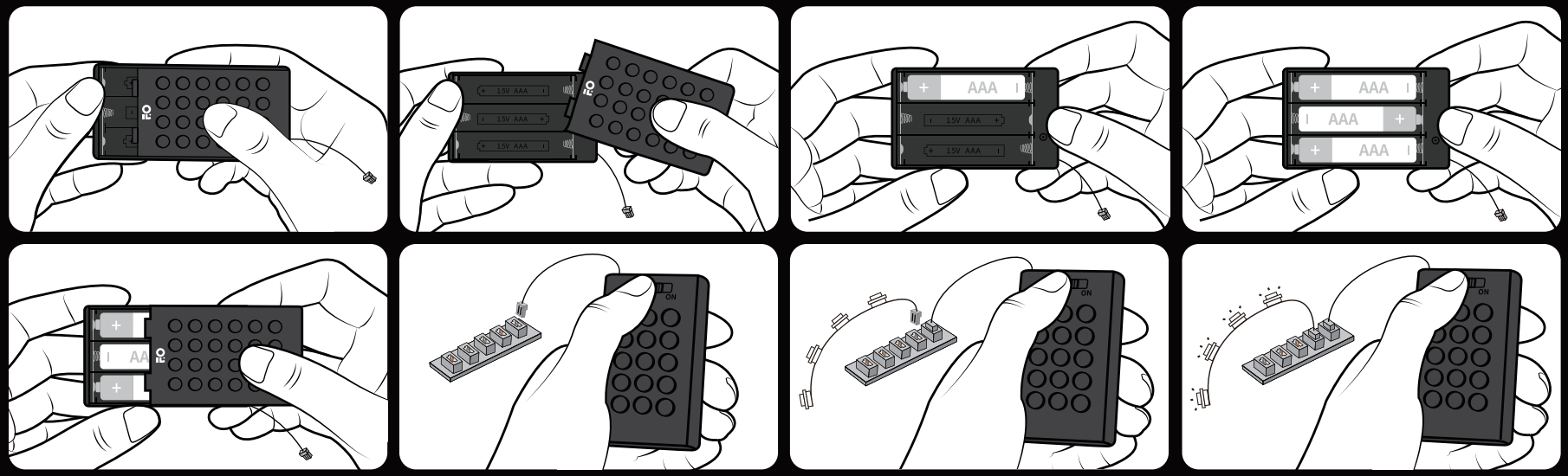

Battery box name: No. 7 block battery box Battery type: AAA*3 (No. 7) Battery rated voltage: 1.5V

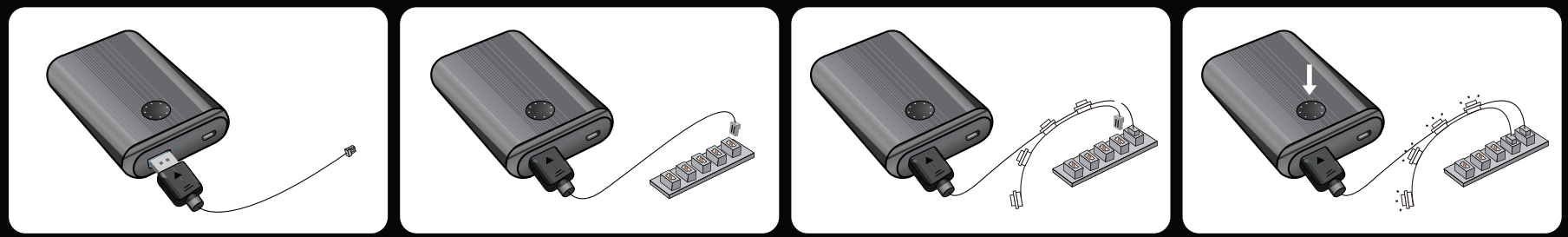

LED LIGHT KIT PACKAGE LIST

Please check and make sure you get all the lighting accessories. Contact us if there are any missing components.

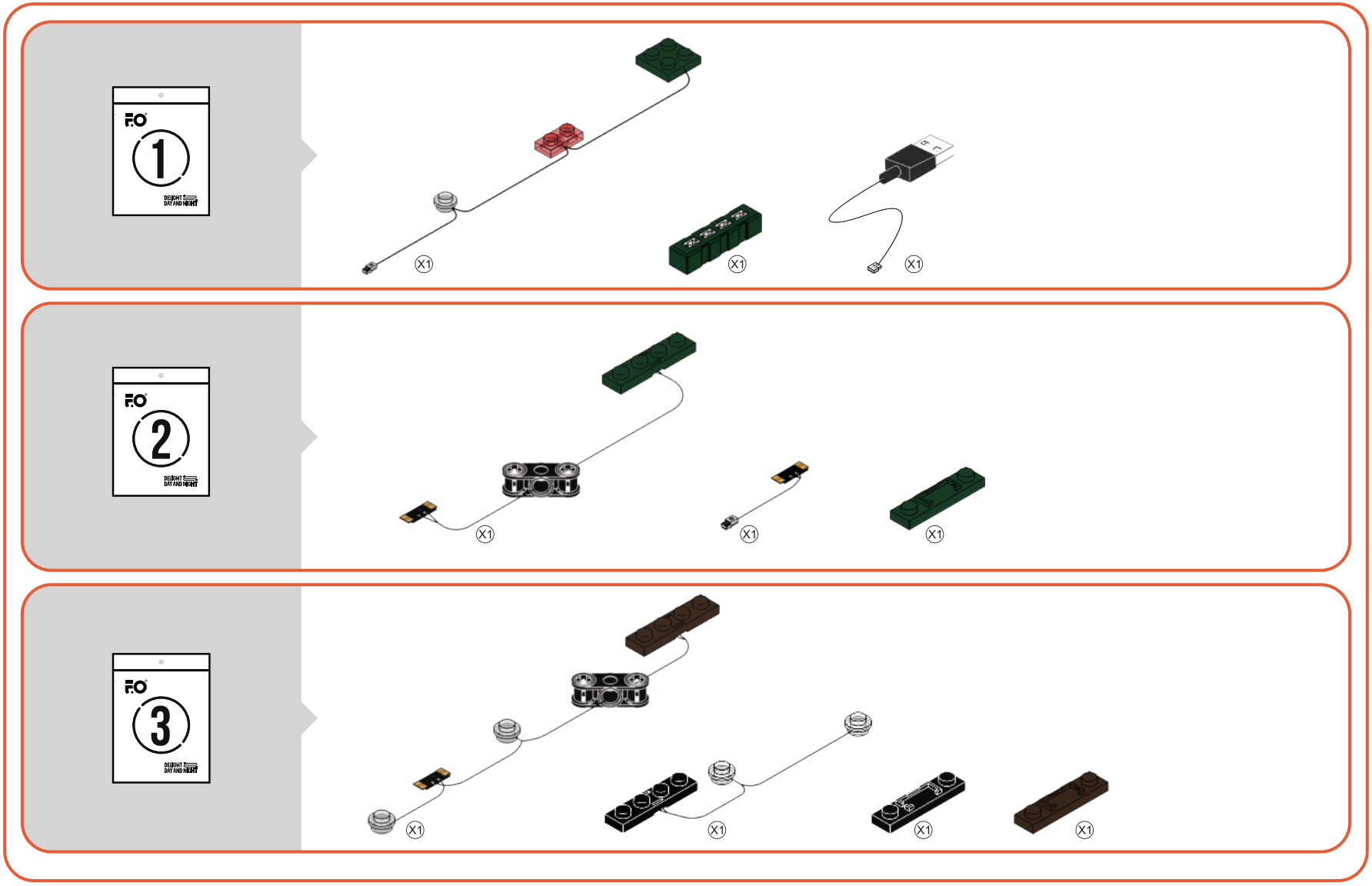

Note: when installing, don't pull it hard, bend it or shake it to avoid damage. The supply voltage should be below 5V, and the button battery holder voltage can be below 6V. Not for children under eight.

How to Unplug the Connector

Note that the new connector will be tight. To remove it, gently shake it from side to side until it loosens, then pull it out.

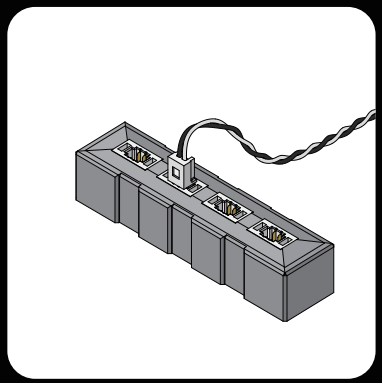

1.The connector is installed, as shown in the picture.

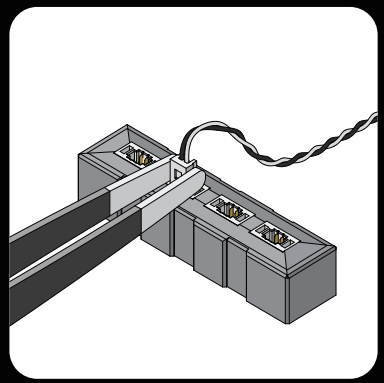

2.Use tweezers to hold the connector on both sides.

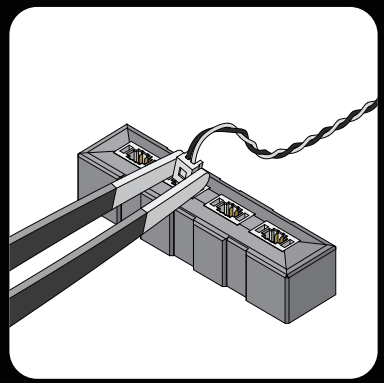

3.Gently shake the connector from side to side.

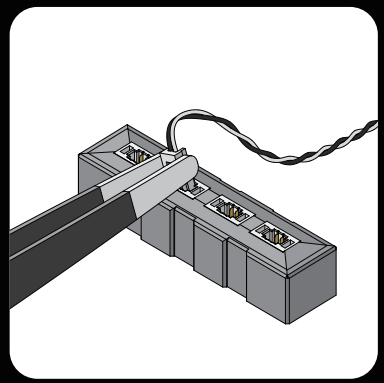

4.When the connector is tight, it will take several shakes to loosen it.

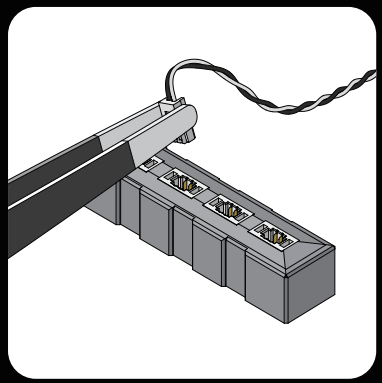

5.Remove the connector.

LED LIGHT KITS INSPECTION GUIDE

1、To enhance your experience, please check the LED Light Kits according to the guide before starting assembly.
2、Atfter inspection, please return the LED Light Kits to their original bags for future use.
3、If any issues occur, please contact customer service.

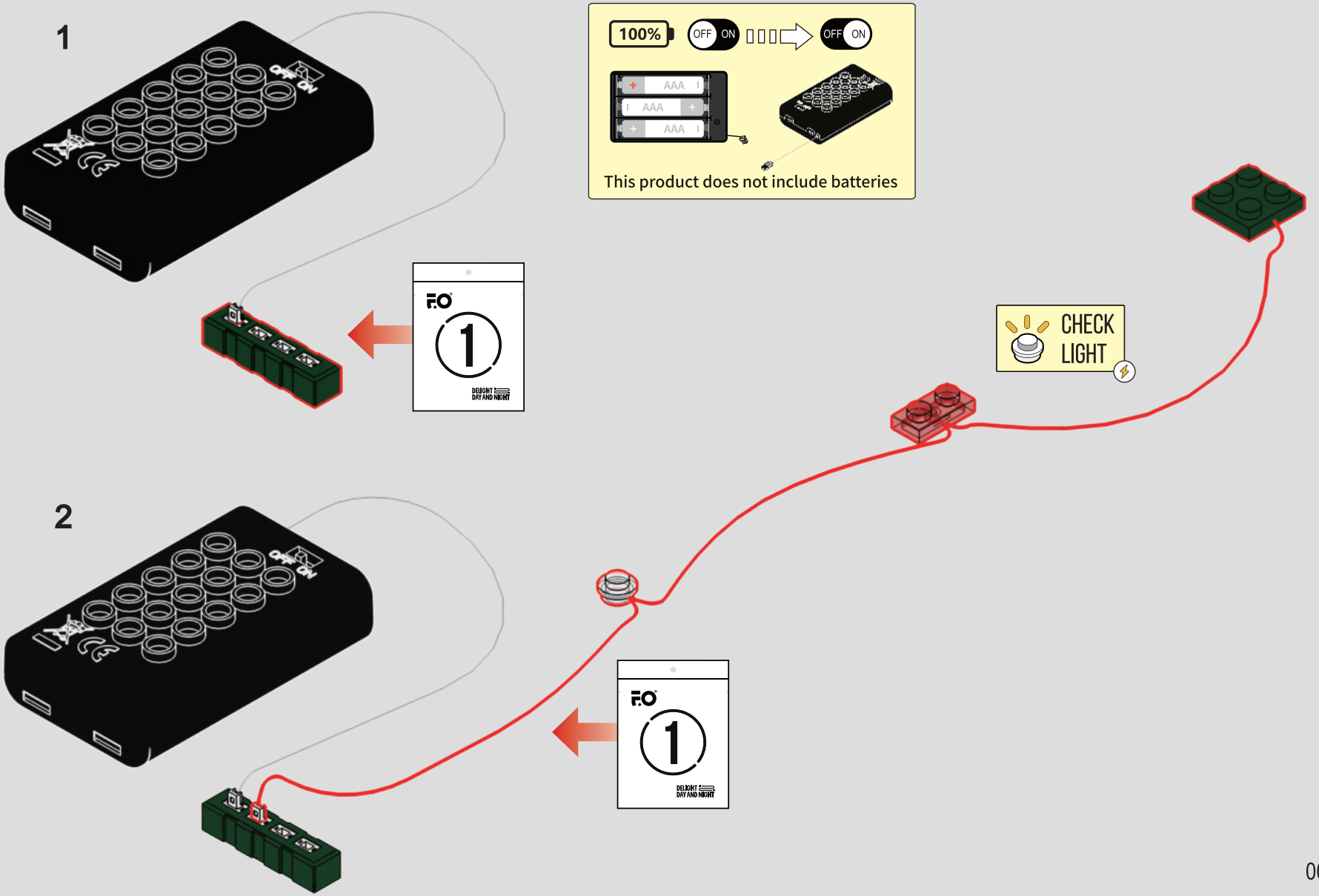

3

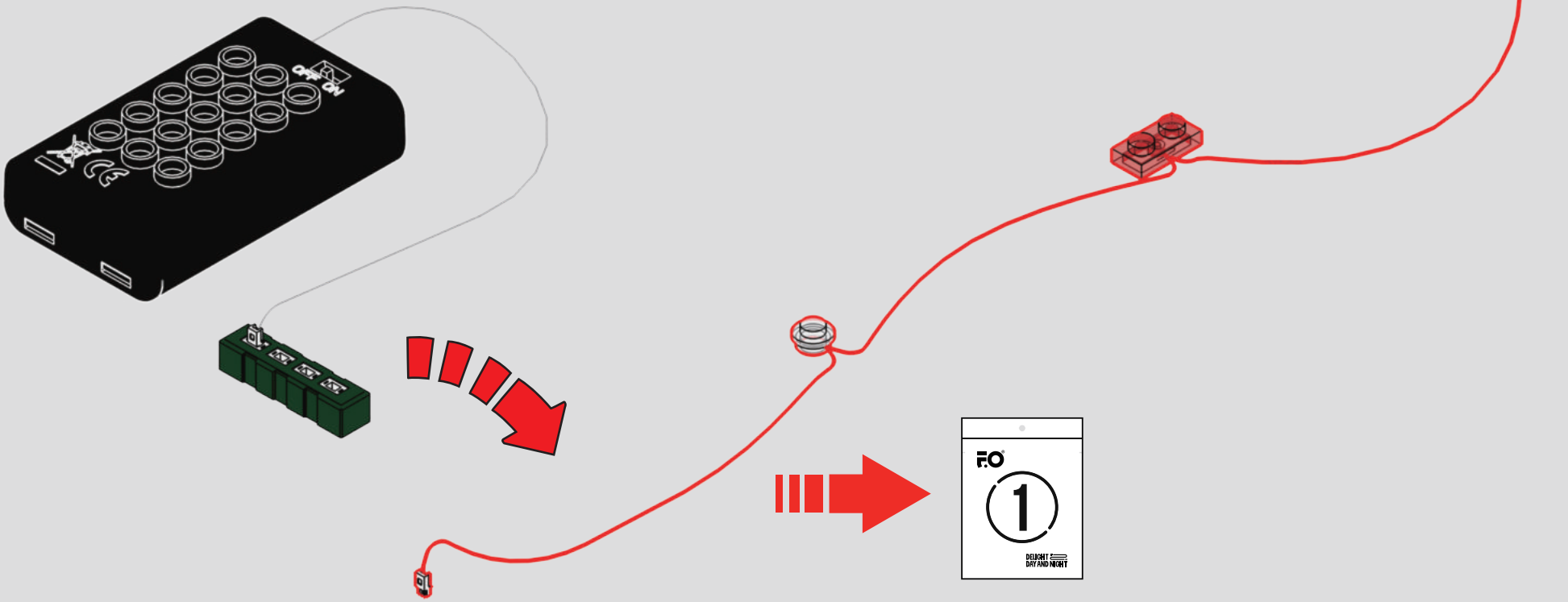

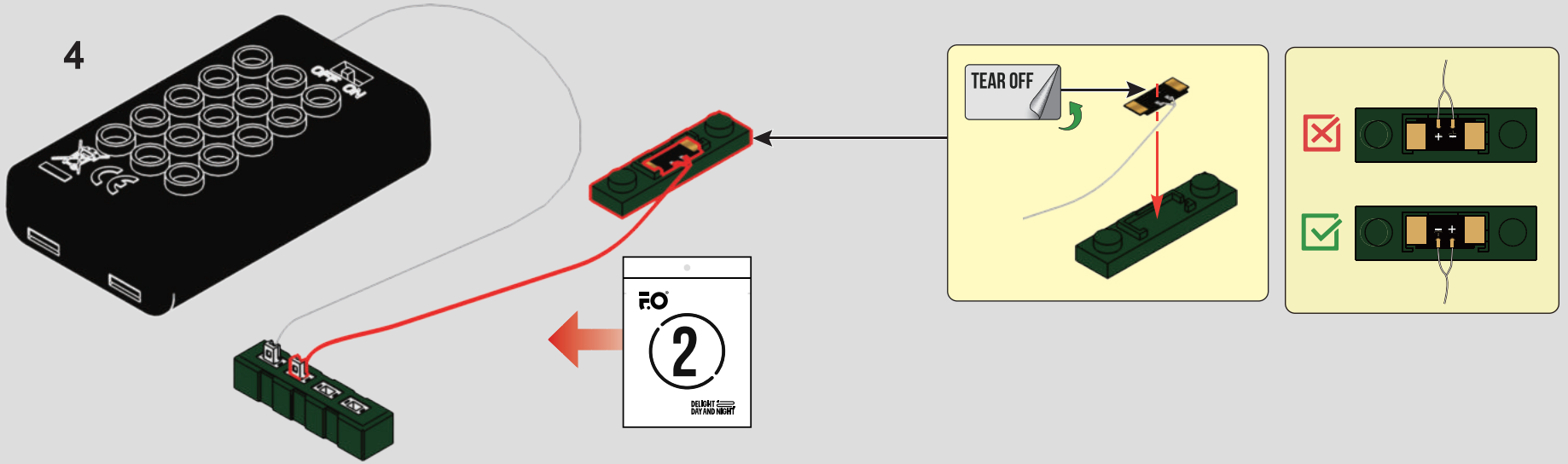
4
TEAR OFF
2
DELIGHT DAY AND NIGHT

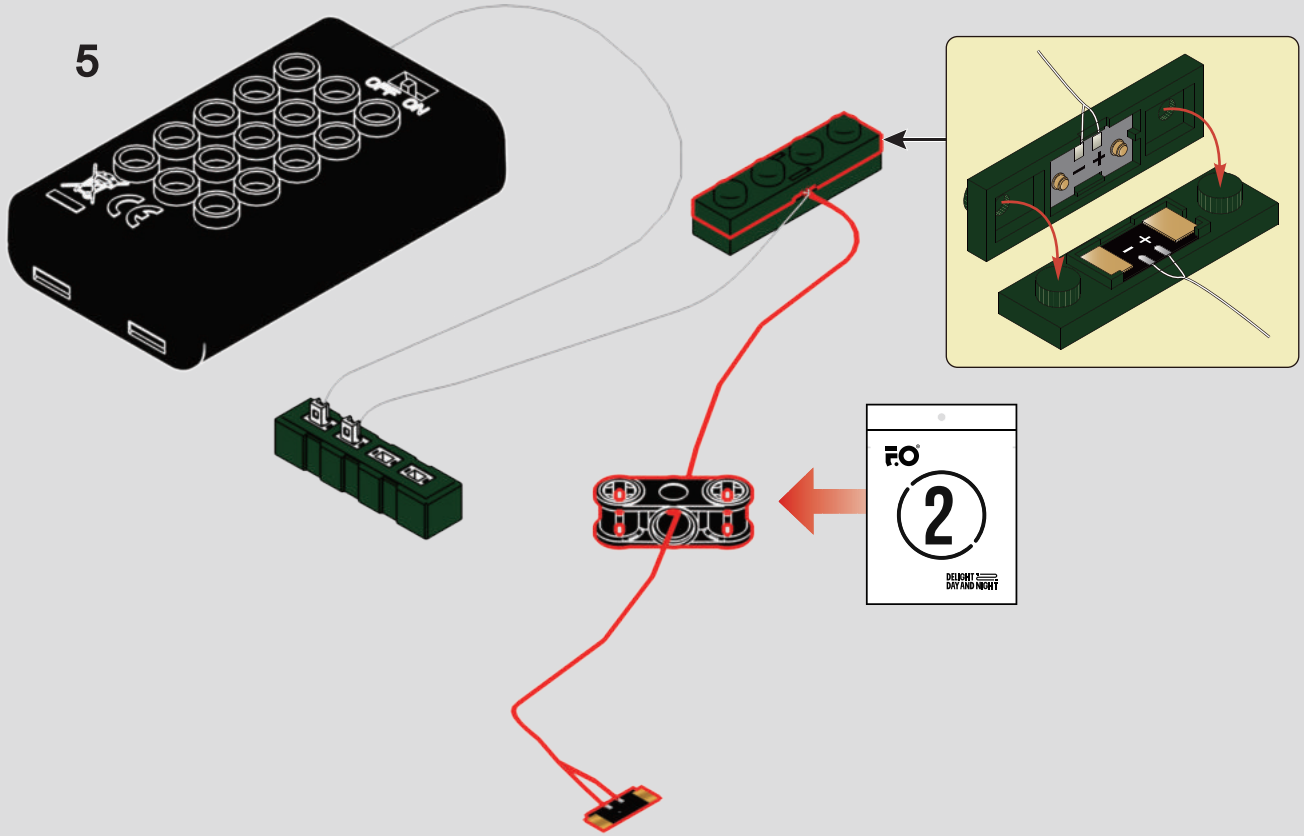
5
2
DELIGHT DAY AND NIGHT

6

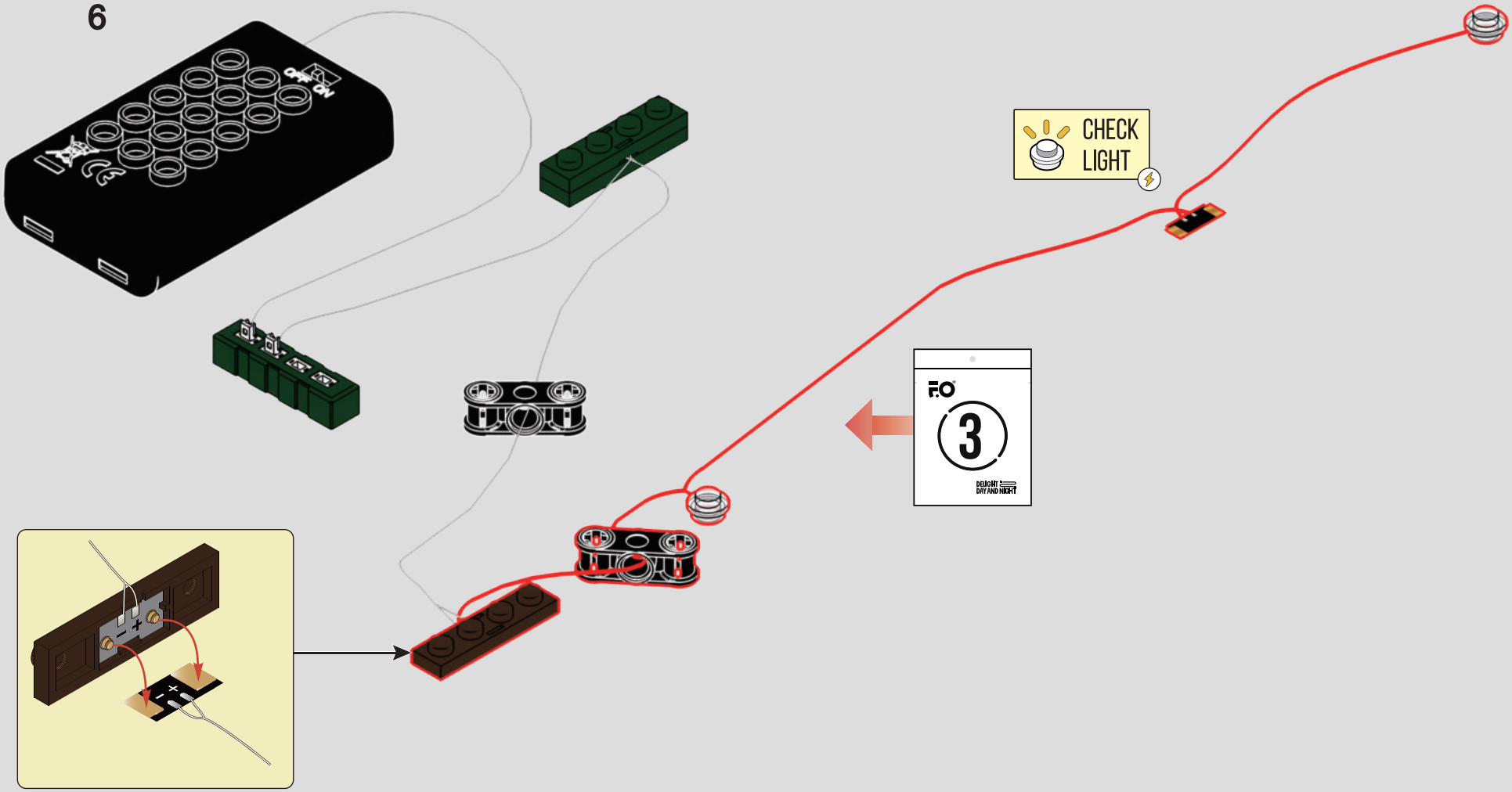

7

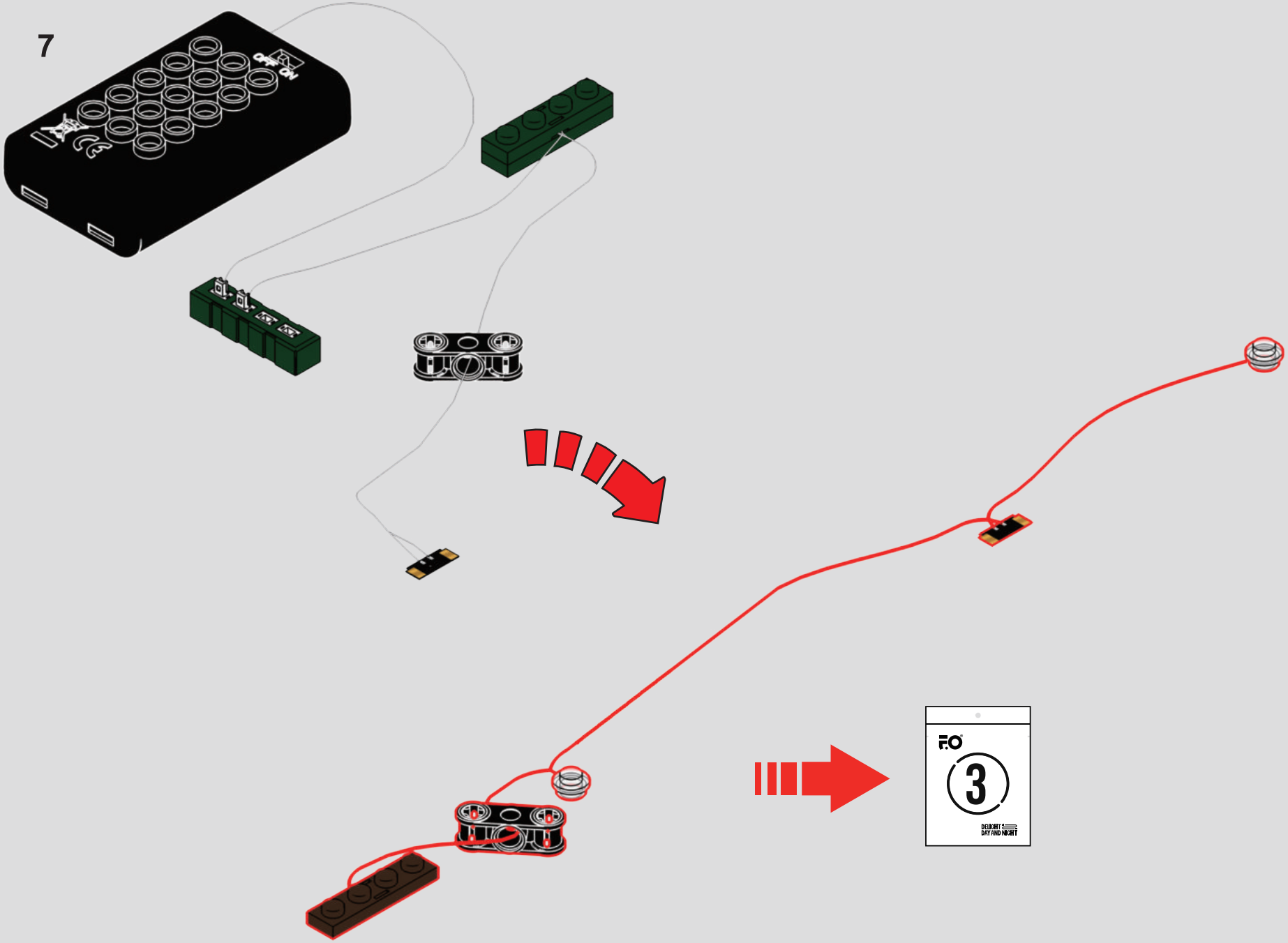

8

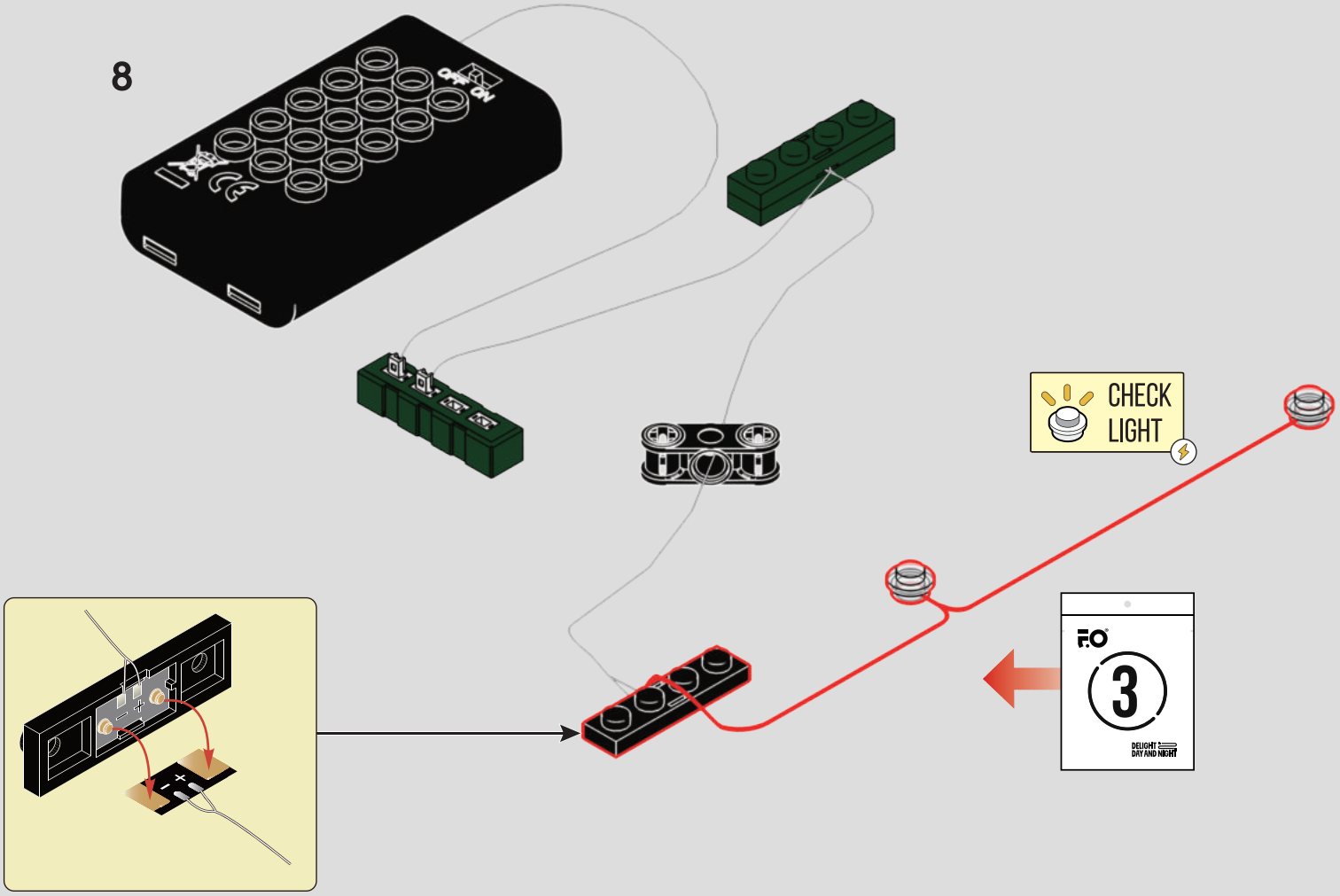

9

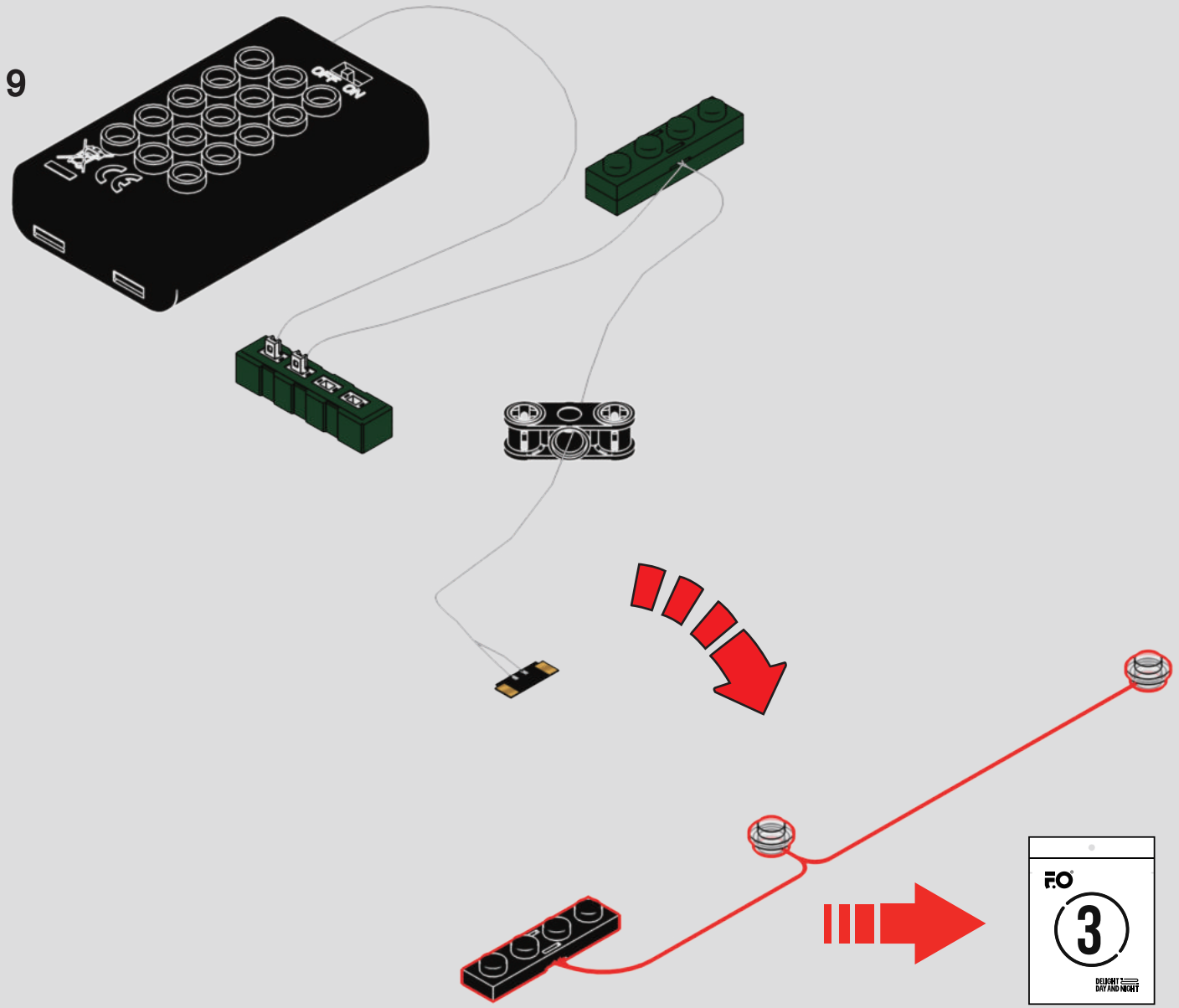

10

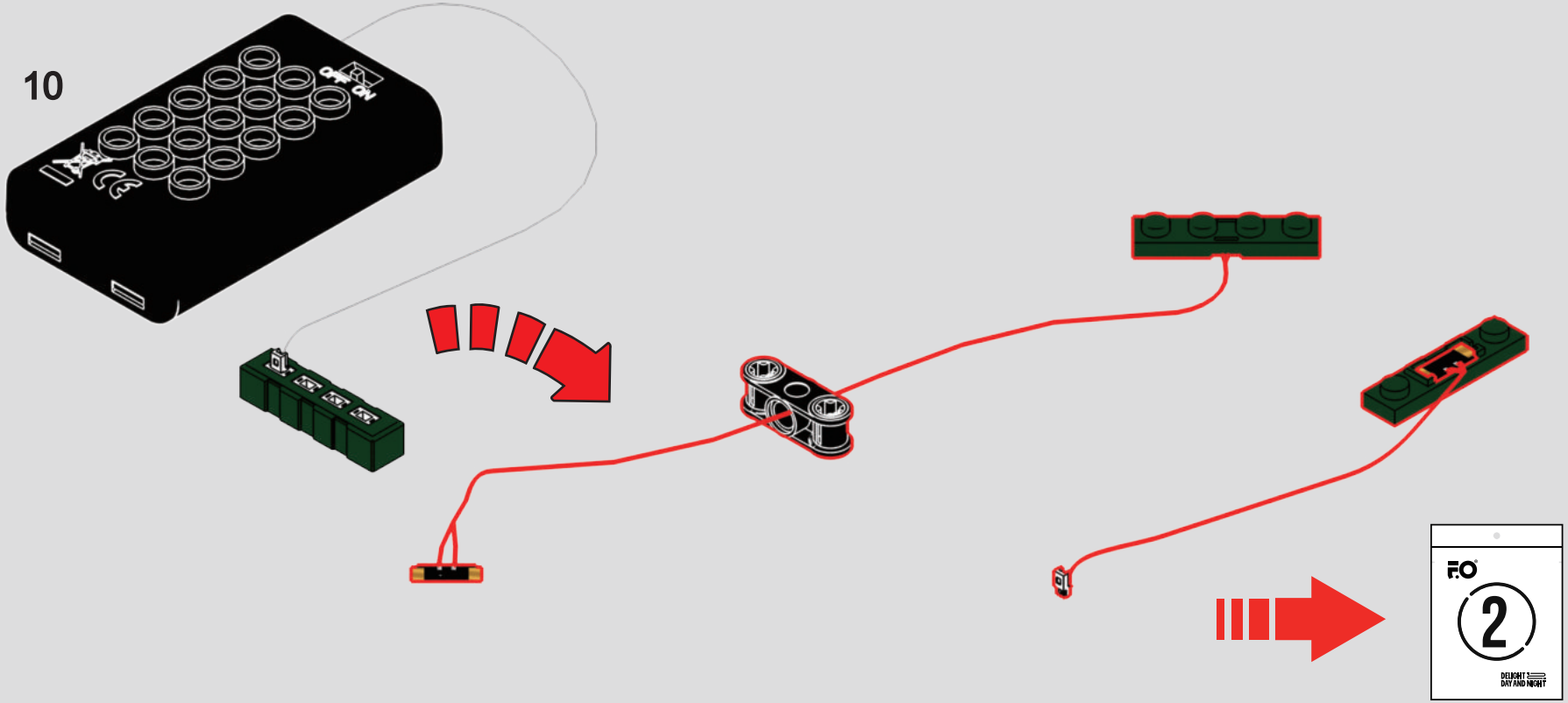

11

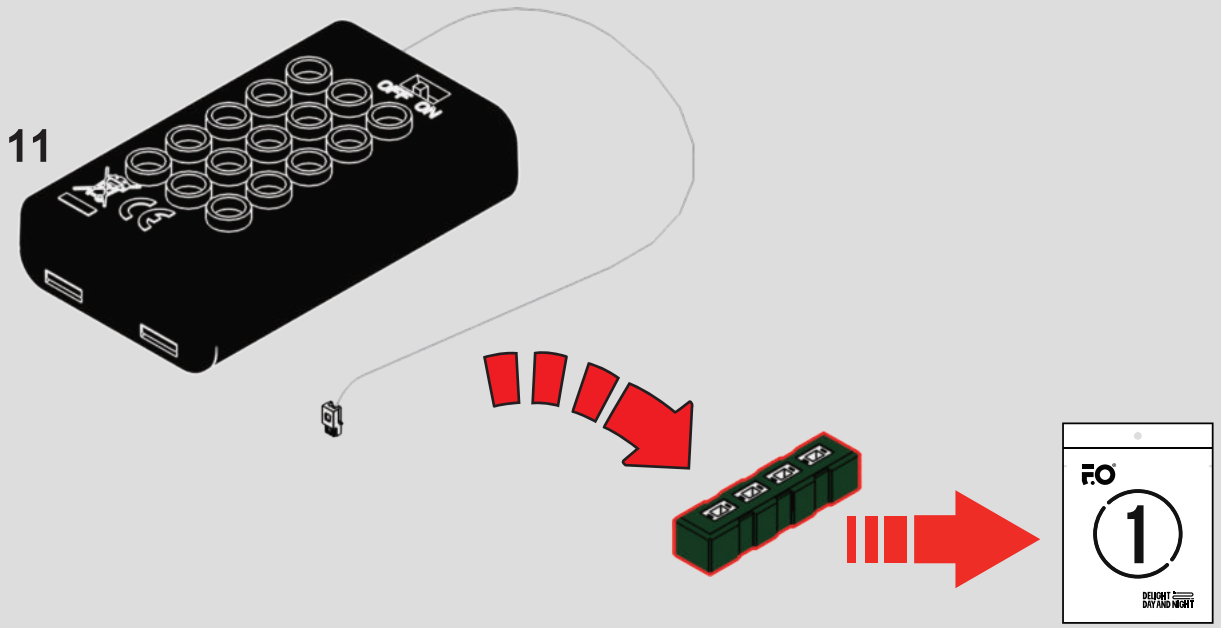

F-pack has two parts: minifigure bricks and special bricks.
Assemble minifigure bricks according to instructions
on the right. Keep special bricks for later assembly steps.

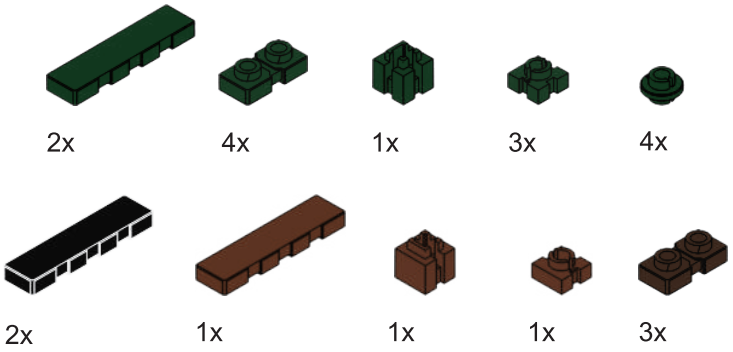

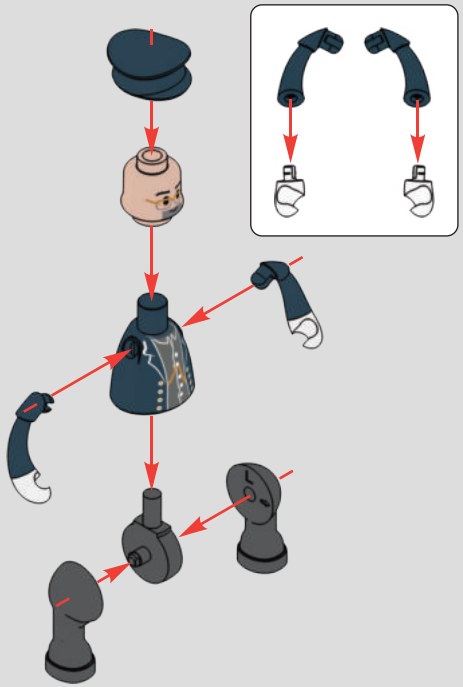

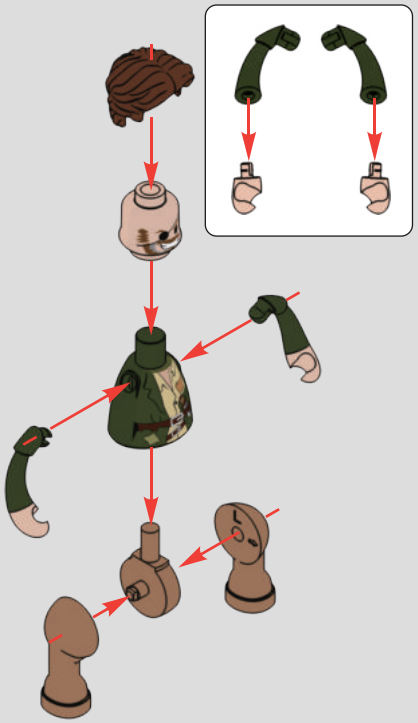

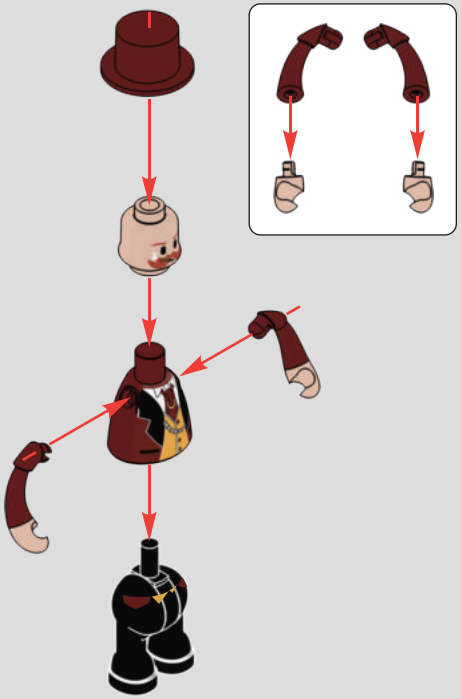

1

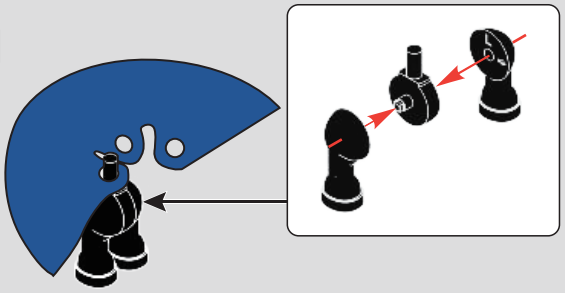

2

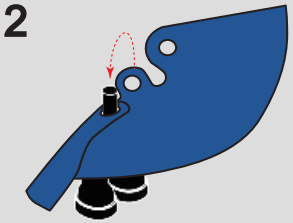

3

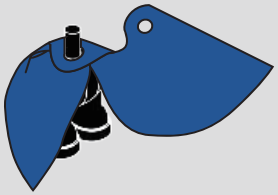

4

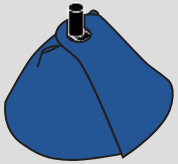

5

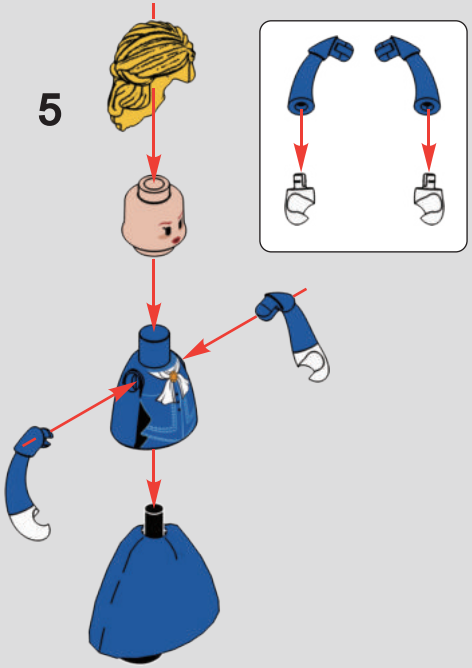

6

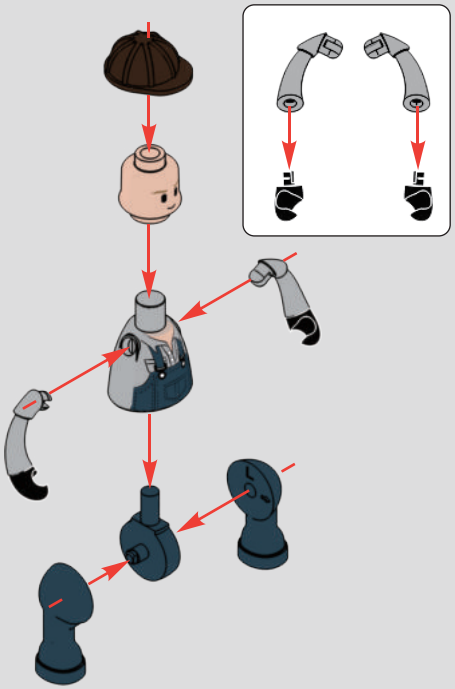

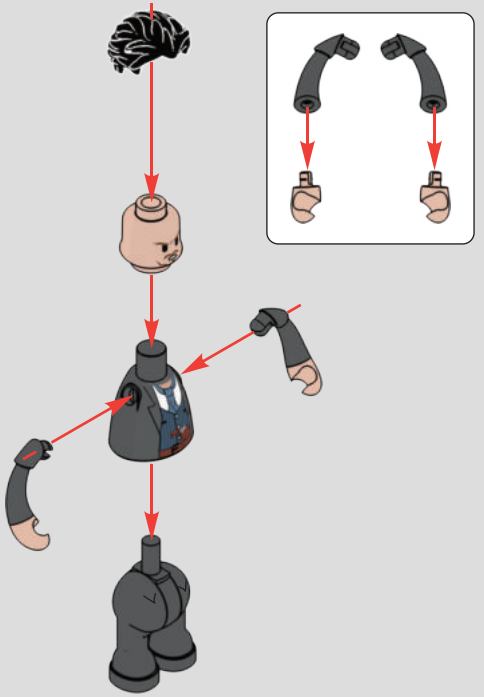

1

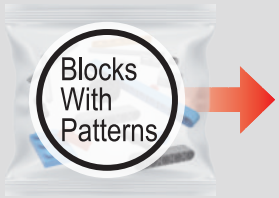
Blocks
With
Patterns

F

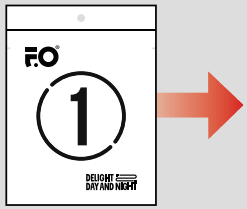
1

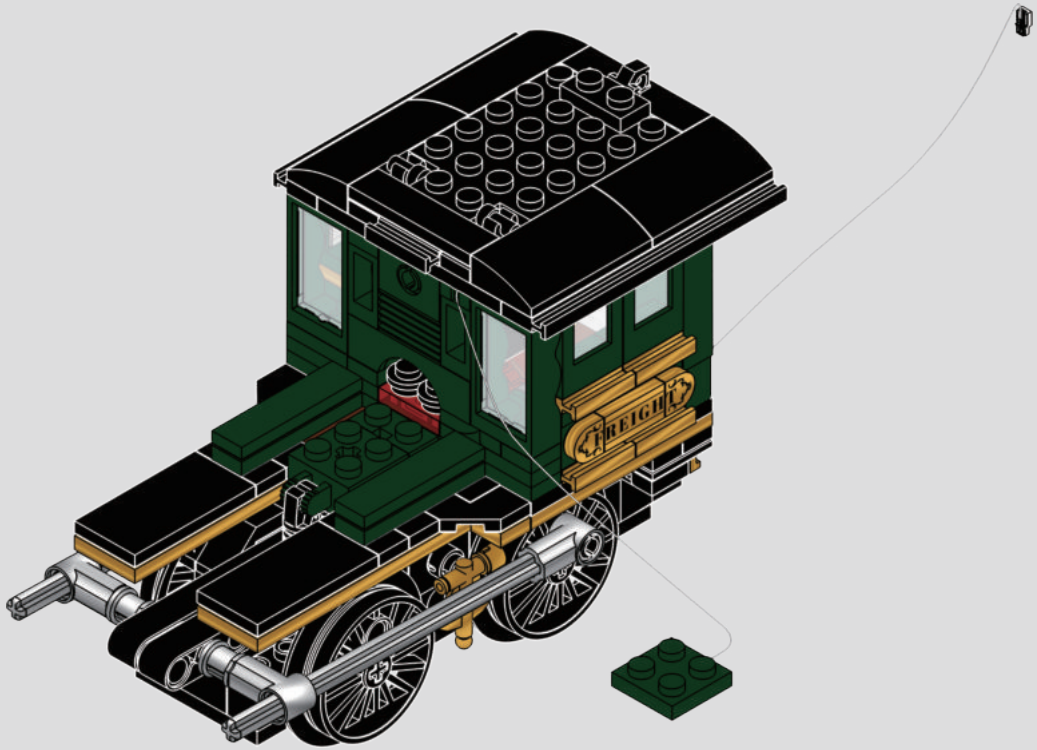

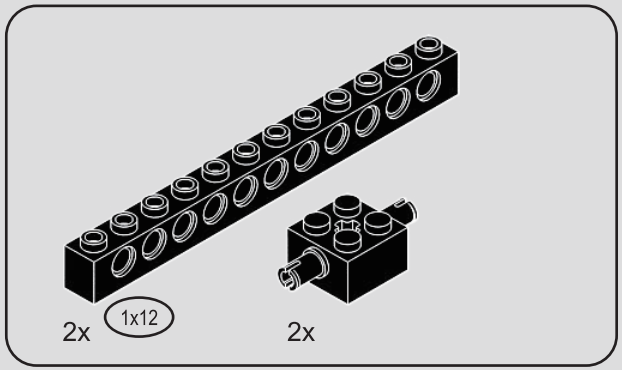

1

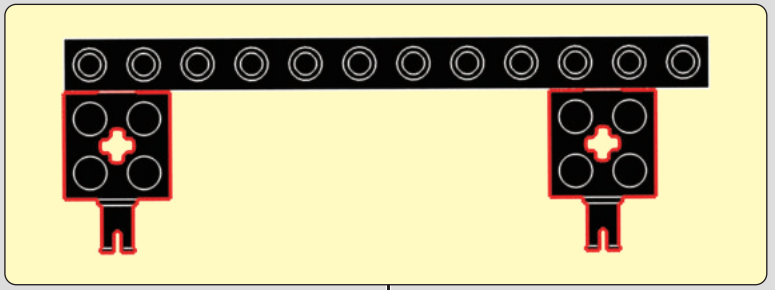

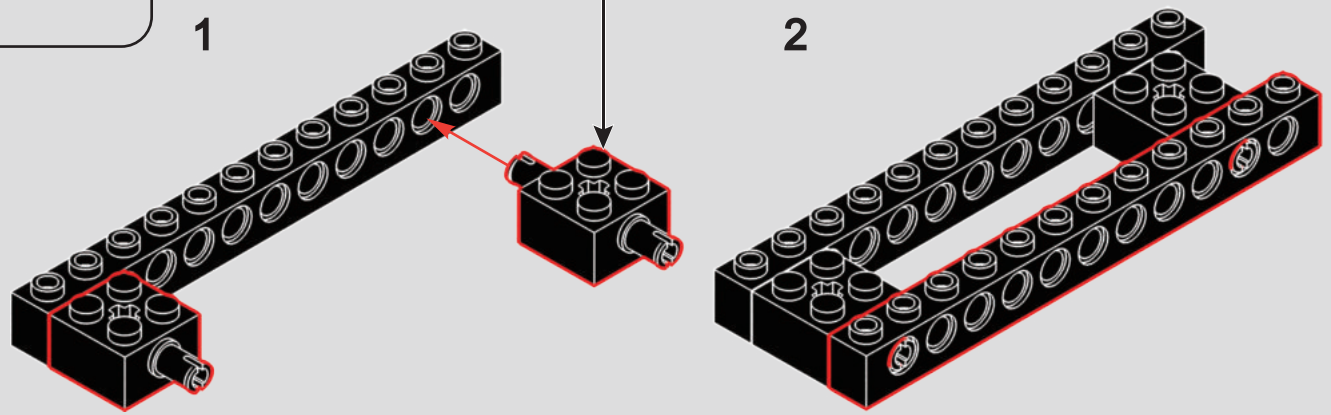

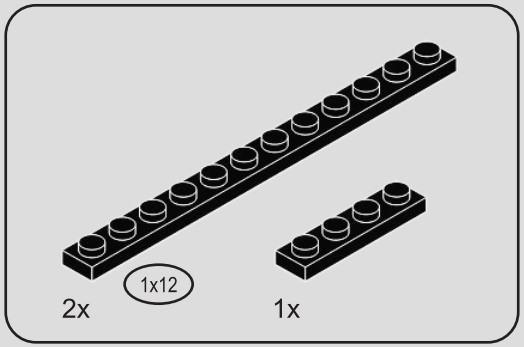

2

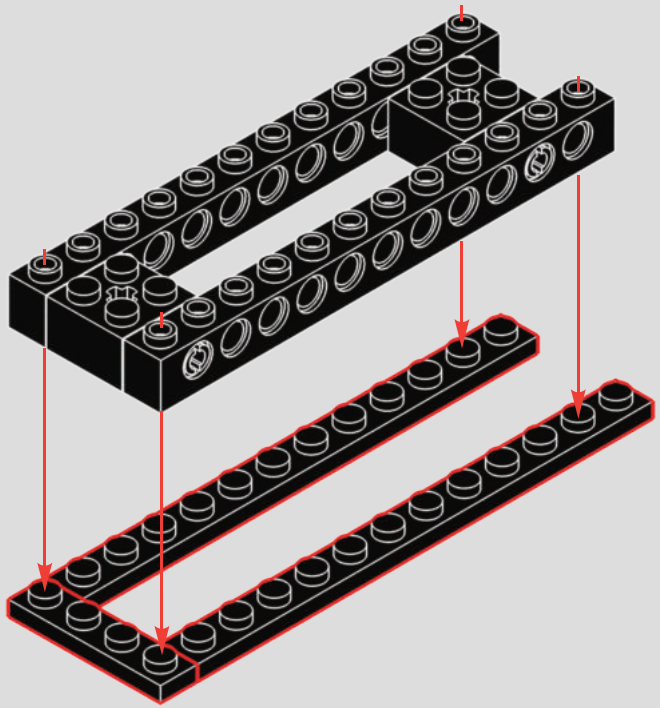

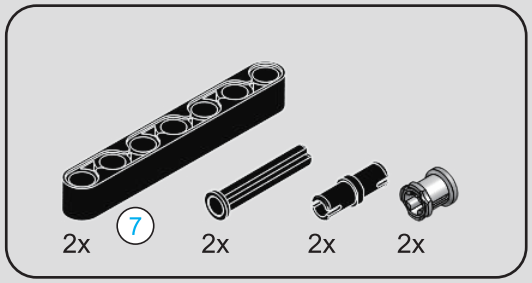

3

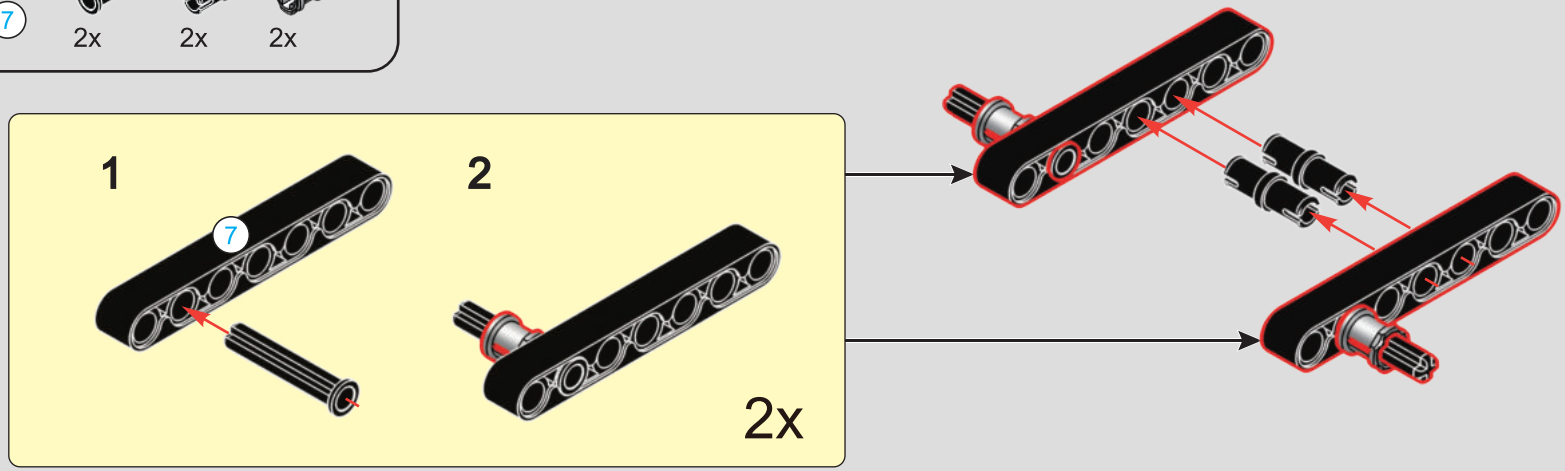

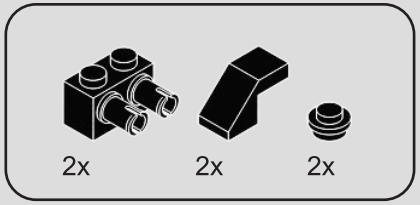

4

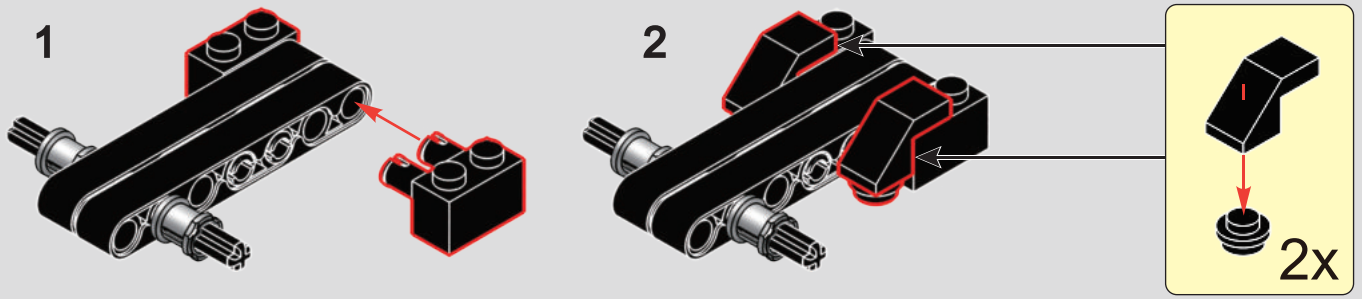

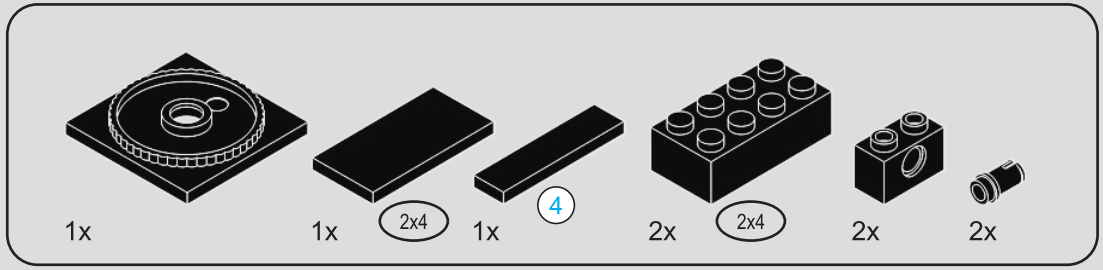

5

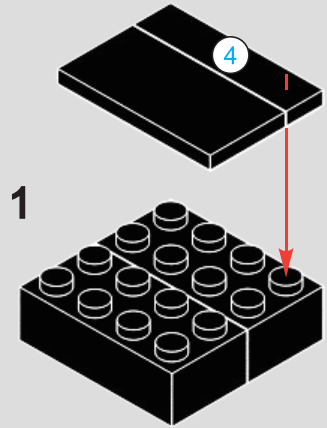

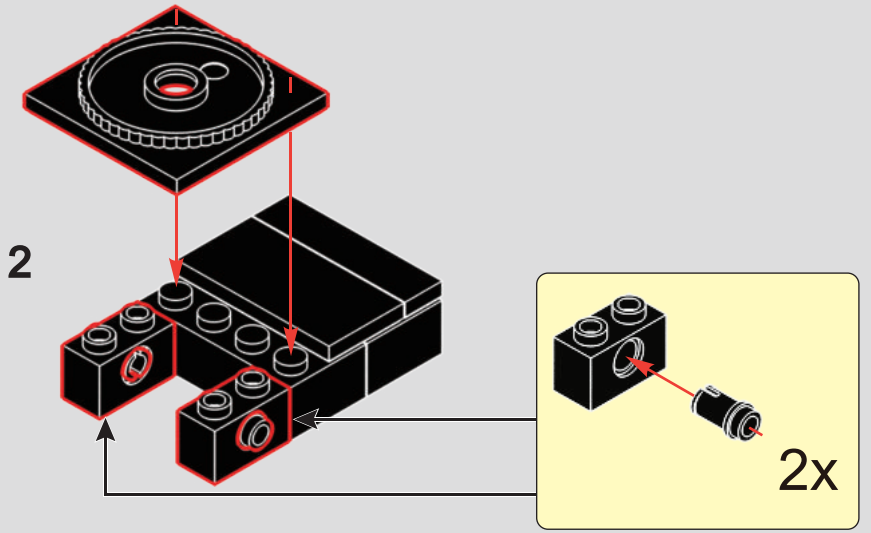

6

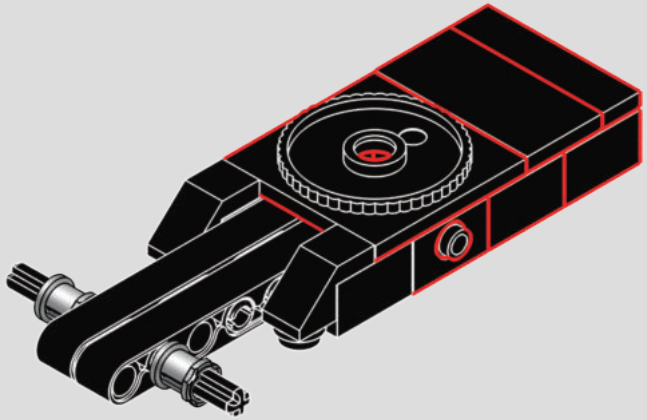

7

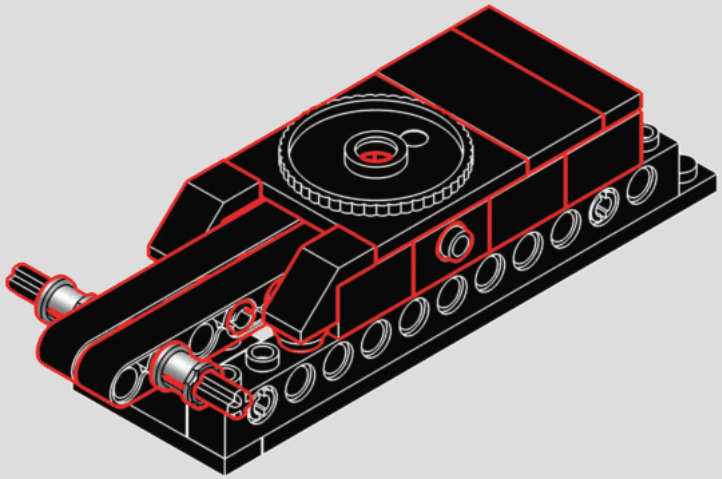

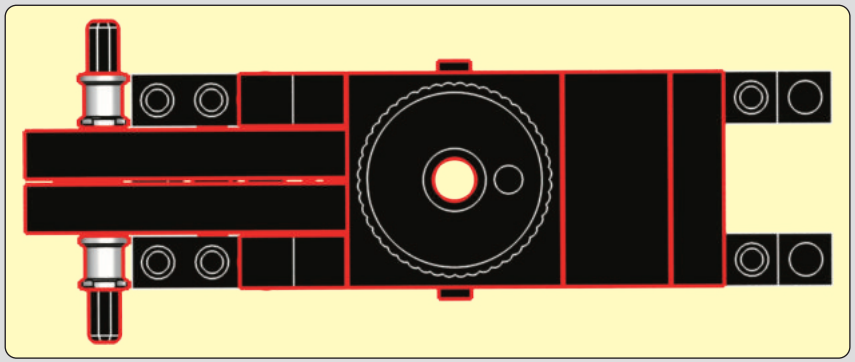

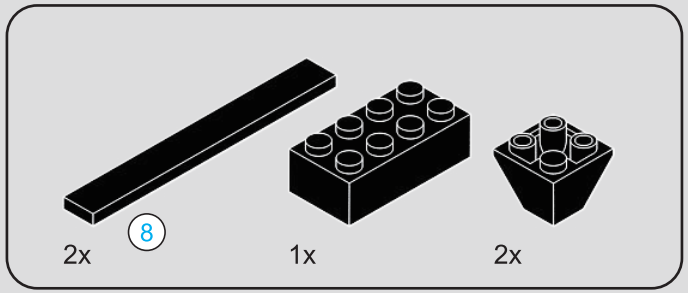

8

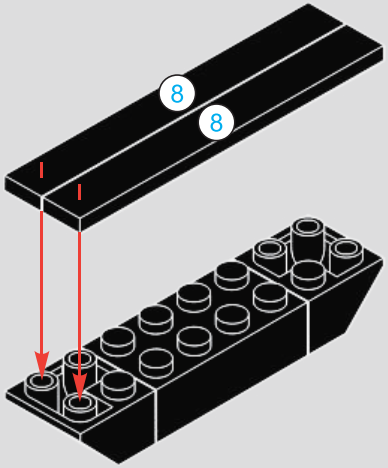

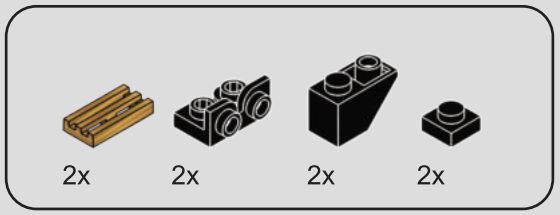

9

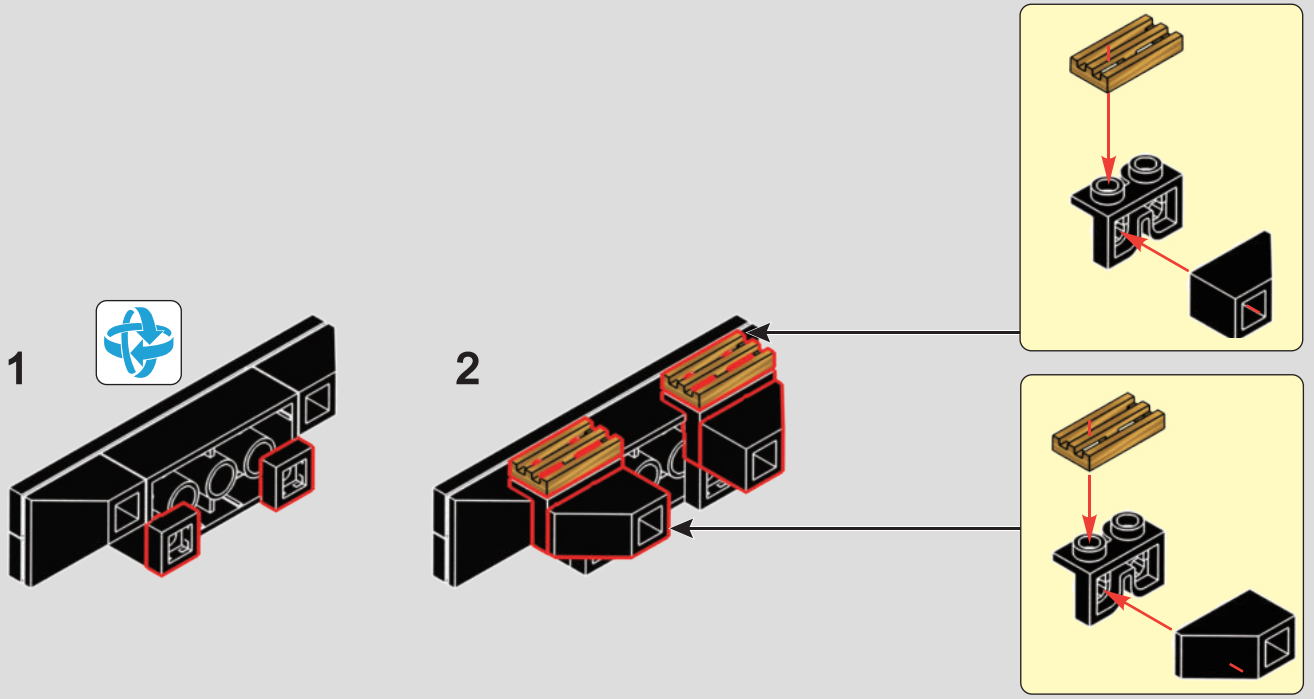

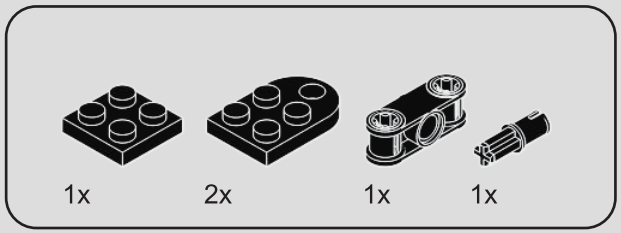

10

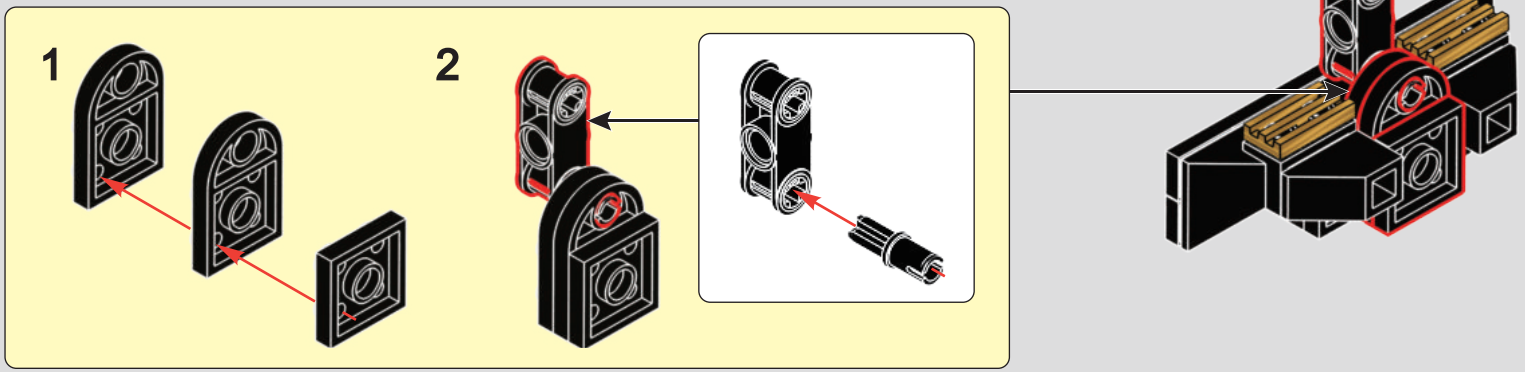

11

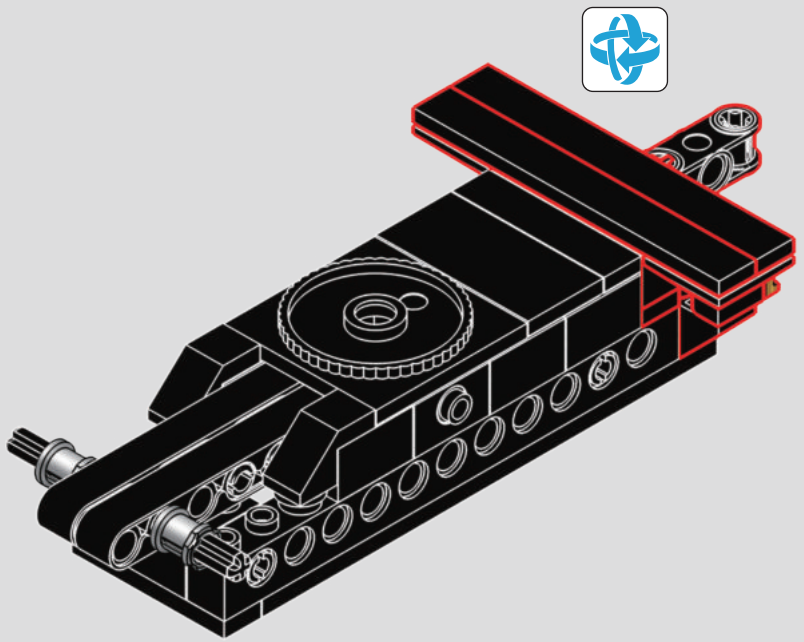

1x

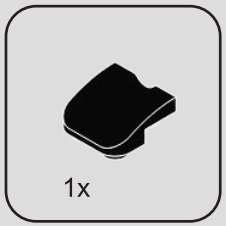

12

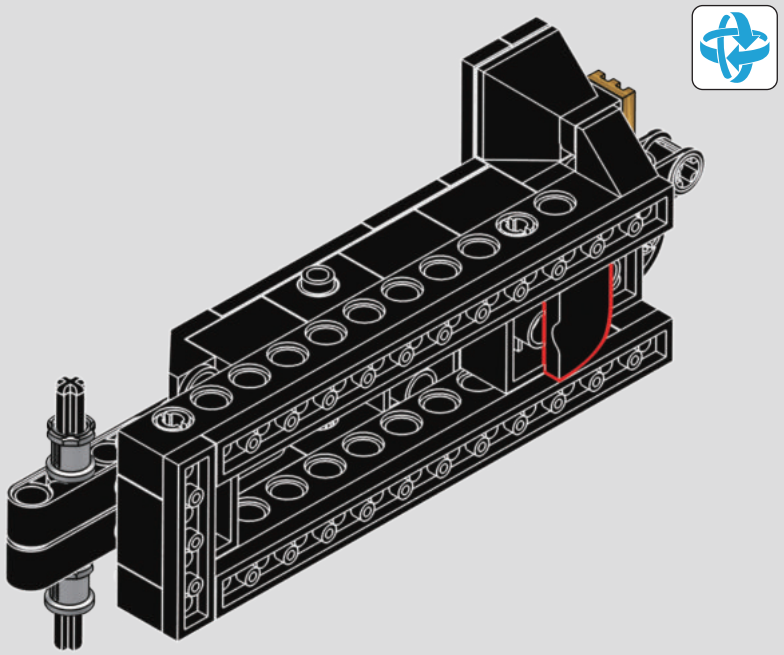

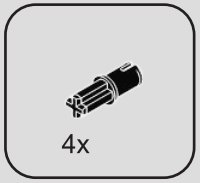

13

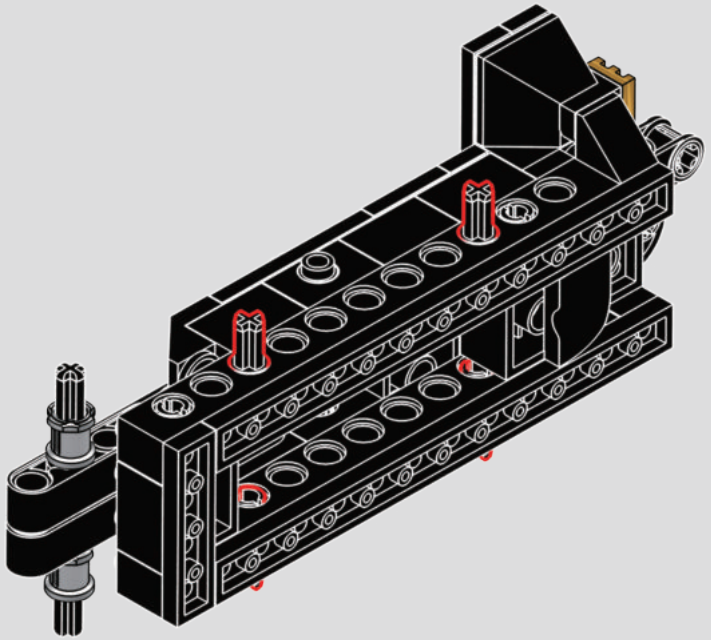

14

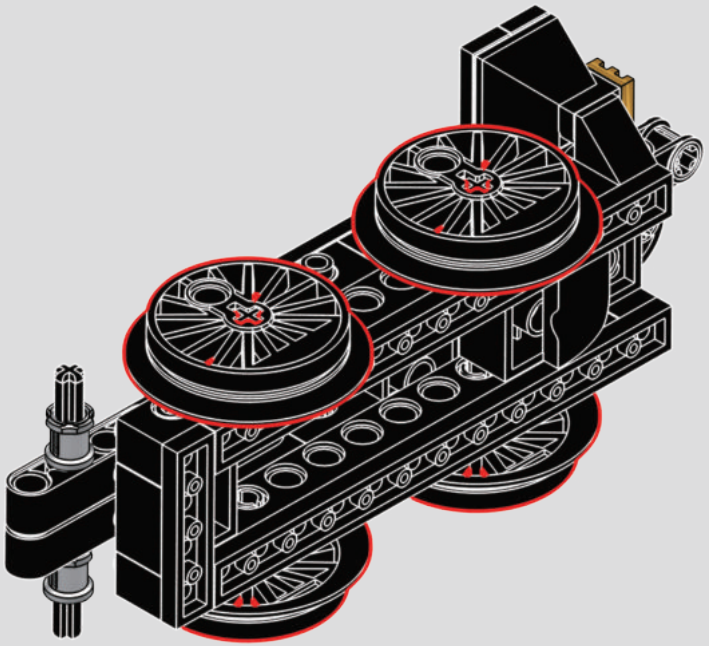

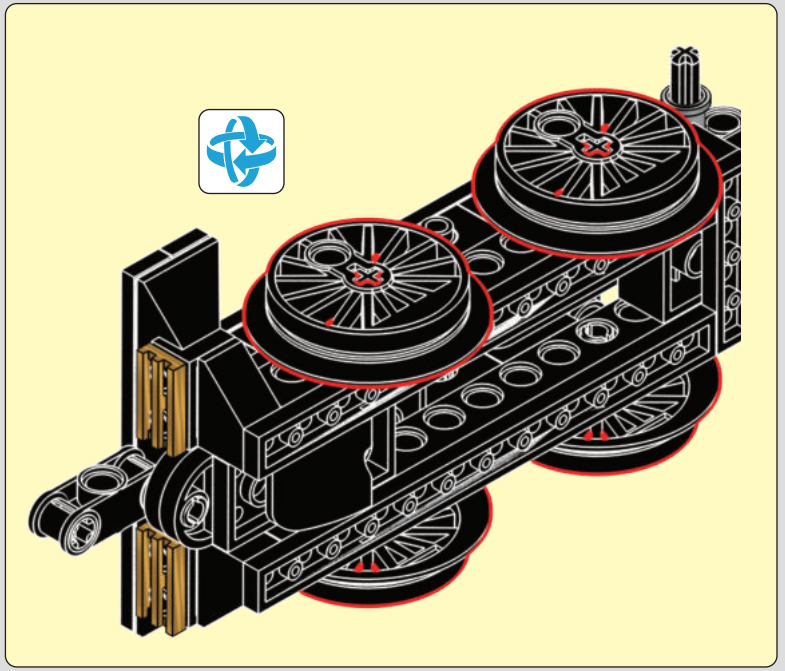

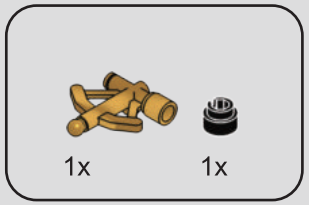

15

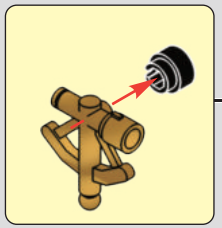

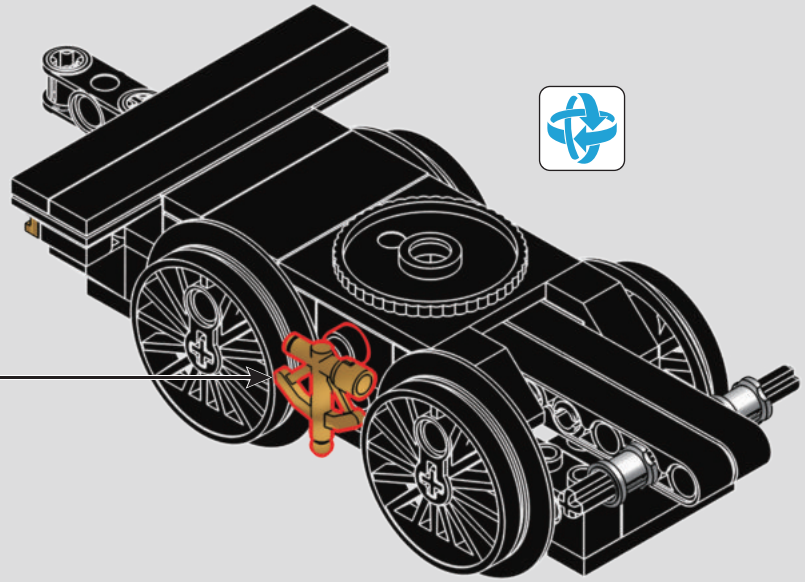

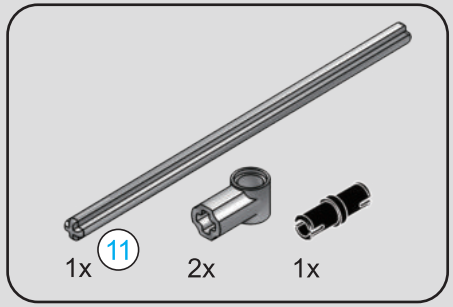

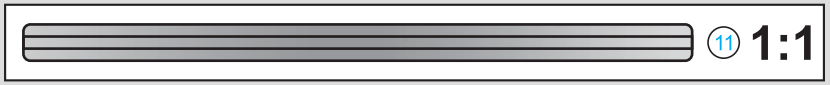

16

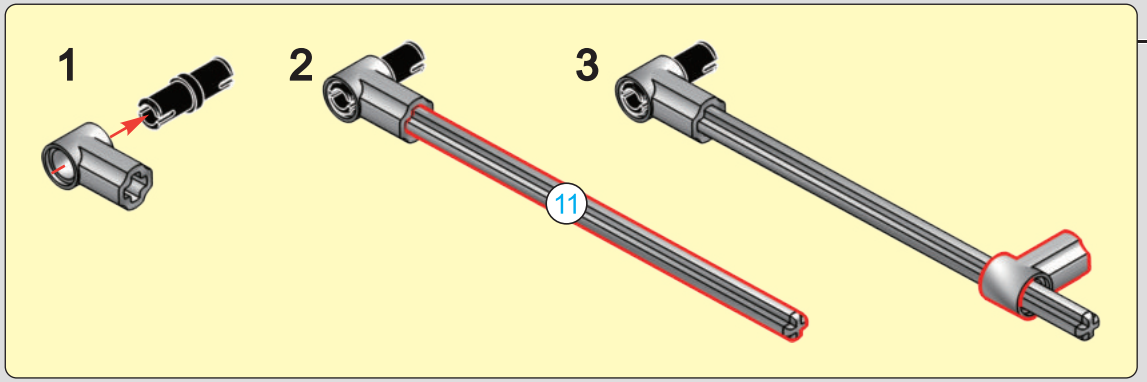

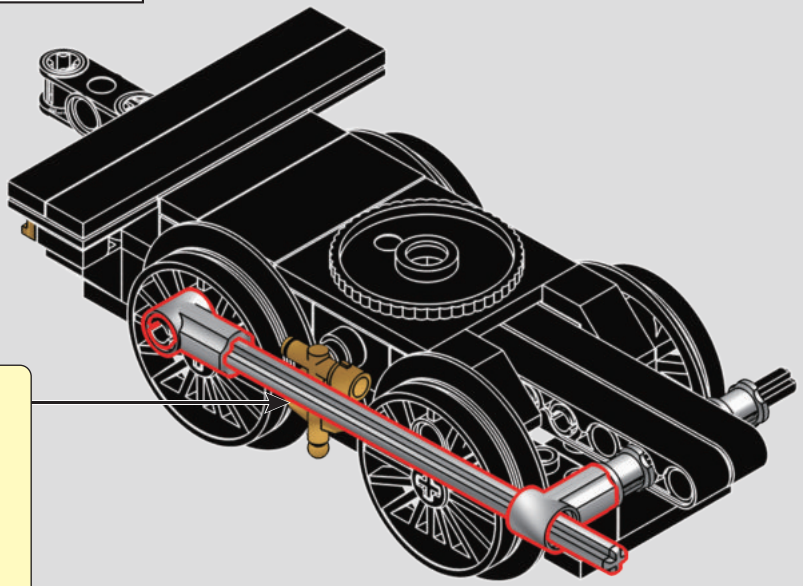

1x 1x

17

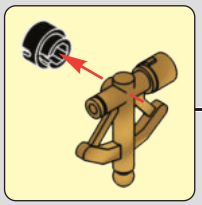

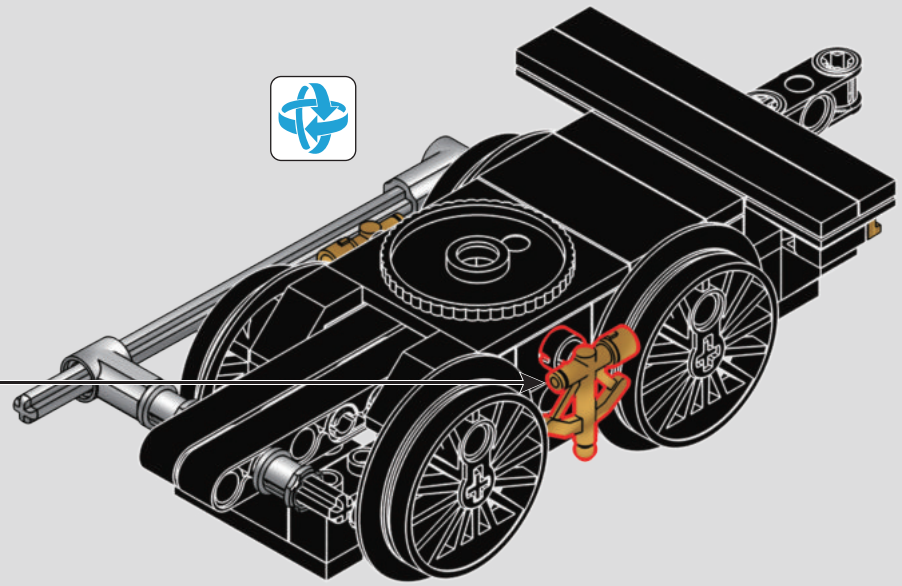

1x 11 2x 1x

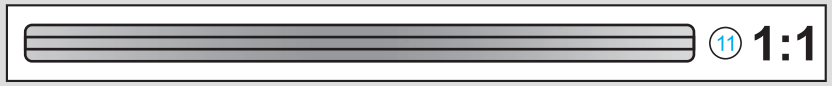

18

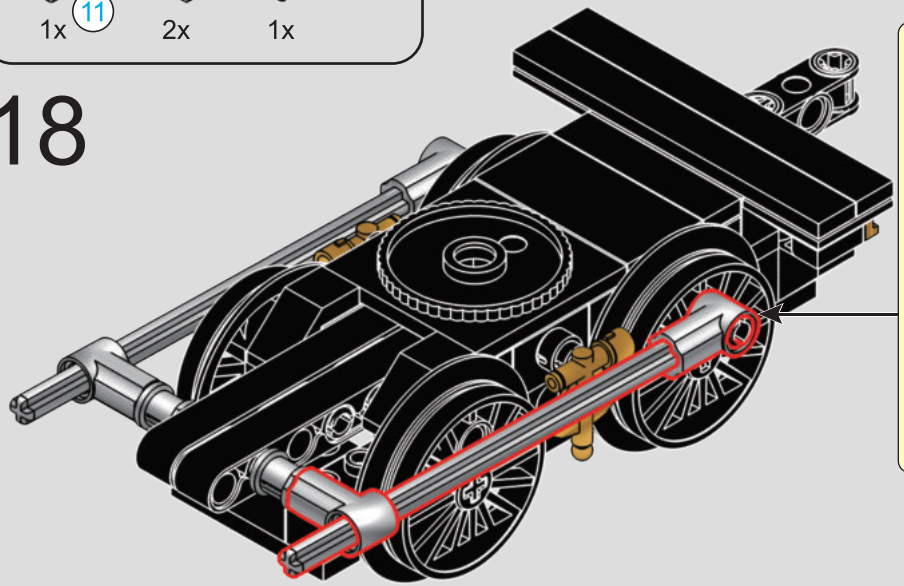

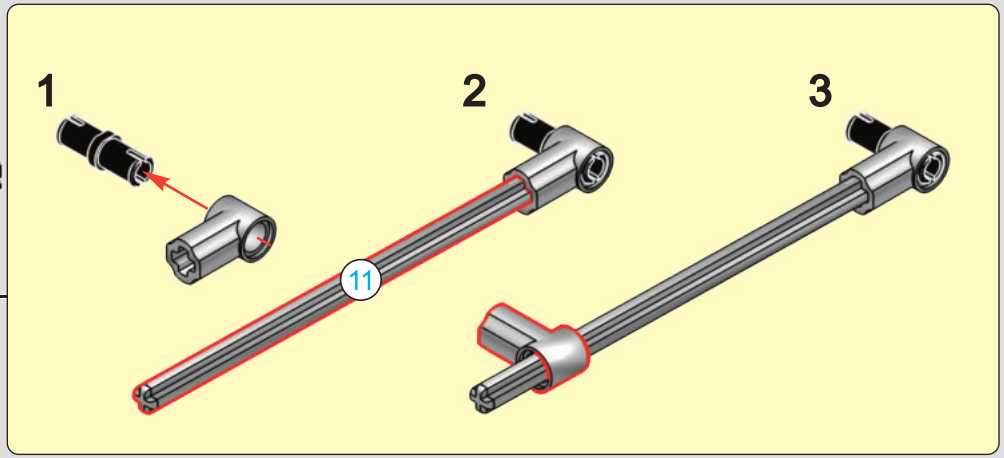

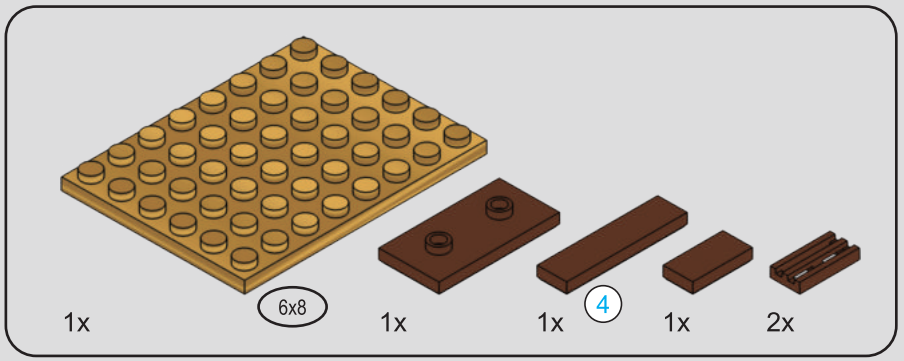

19

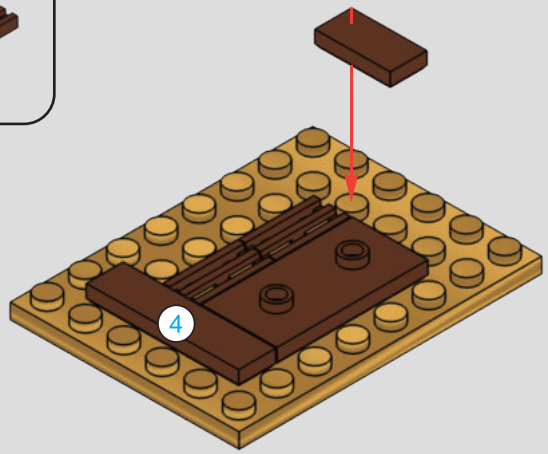

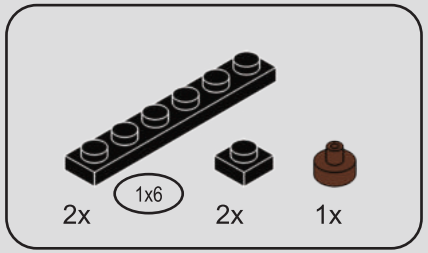

20

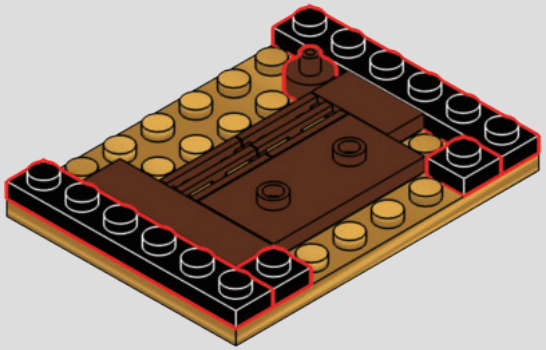

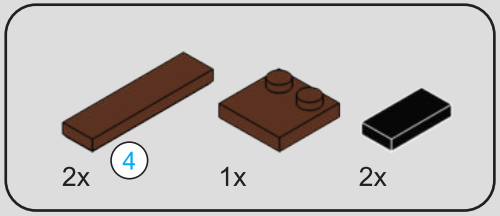

21

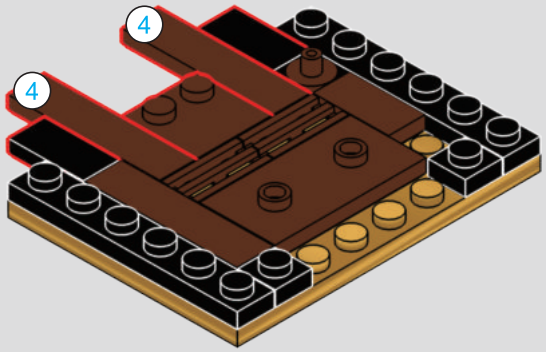

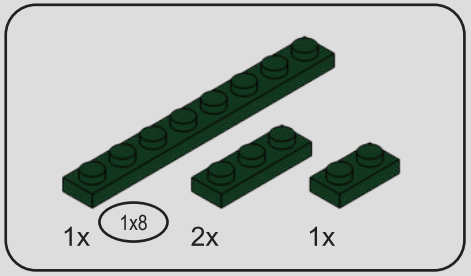

22

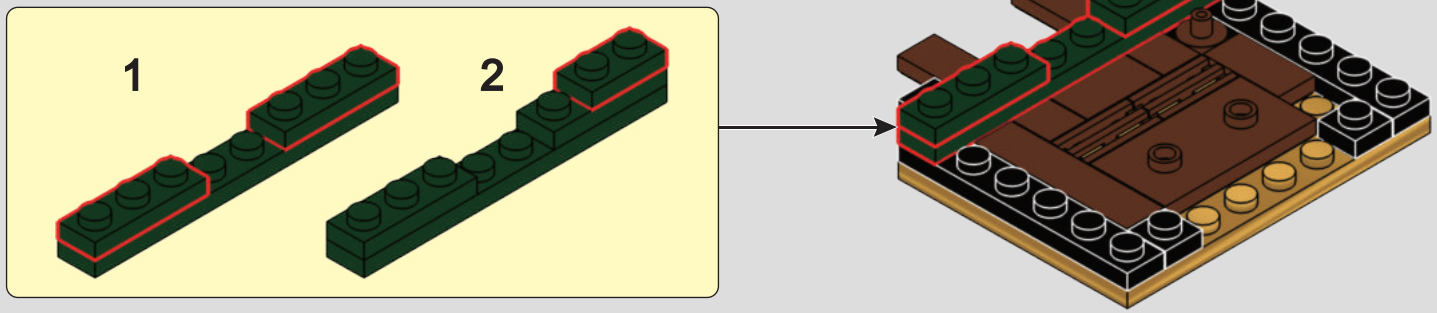

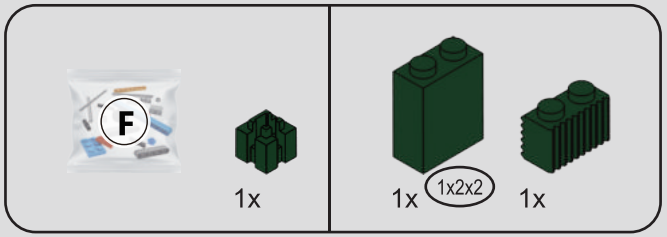

23

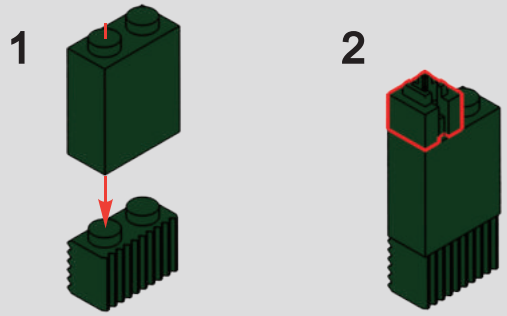

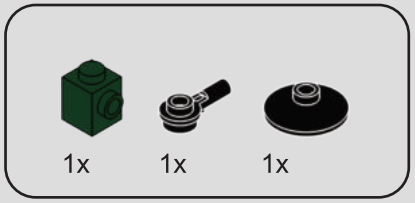

24

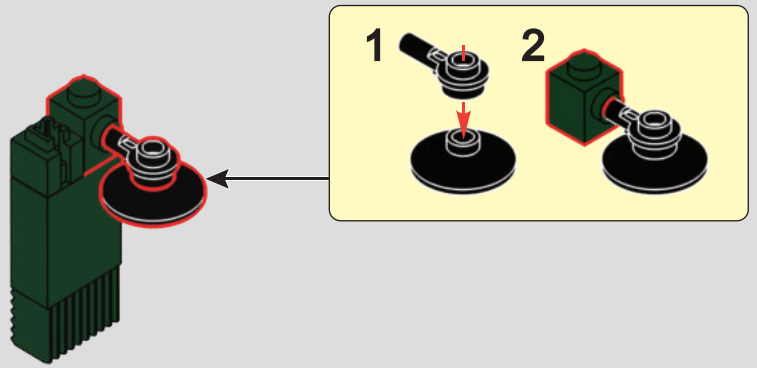

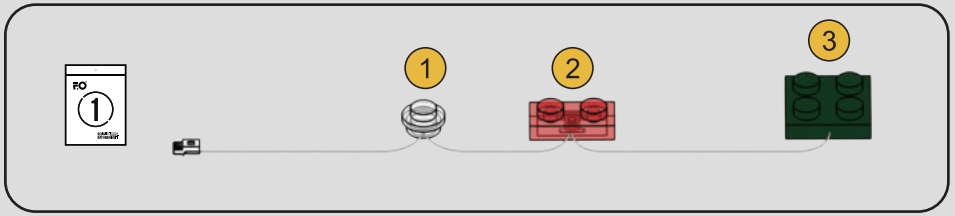

25

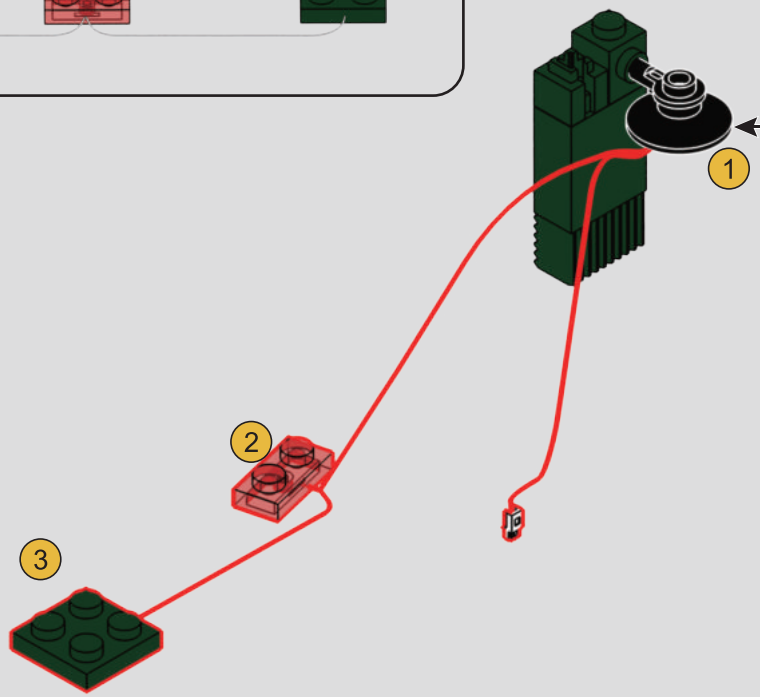

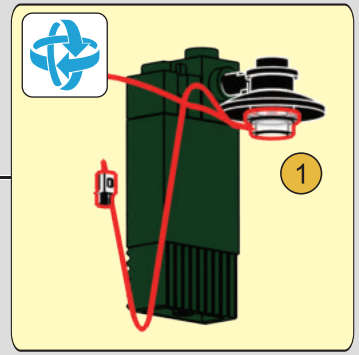

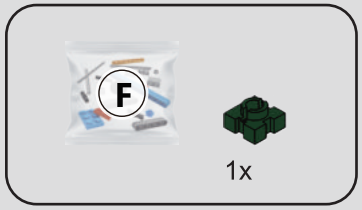

26

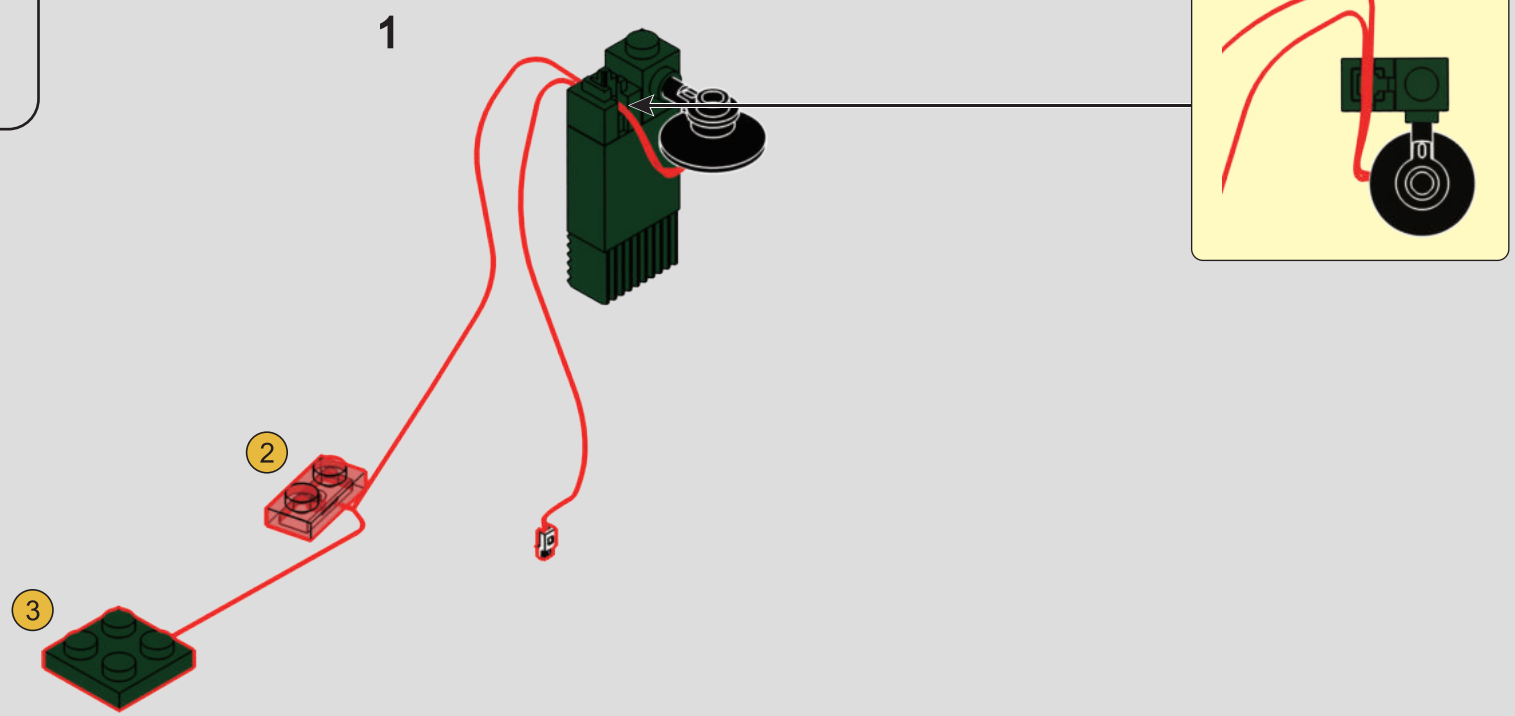

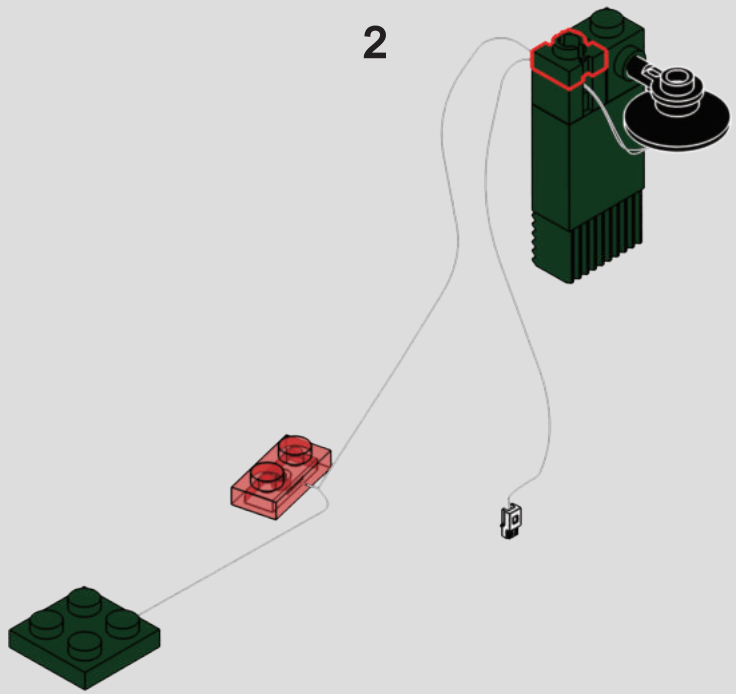

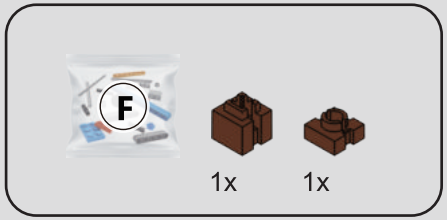

27

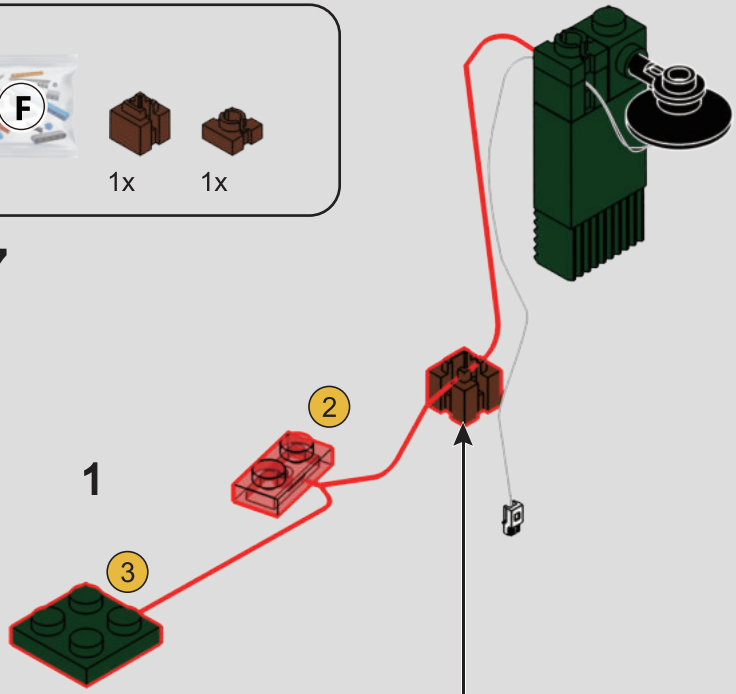

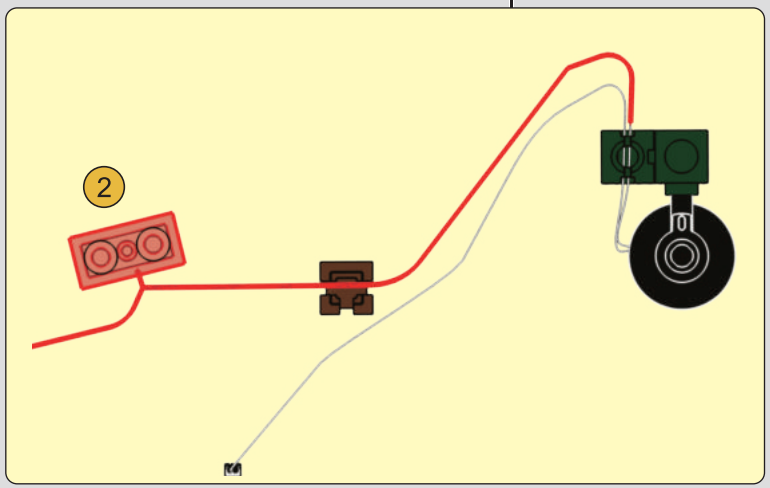

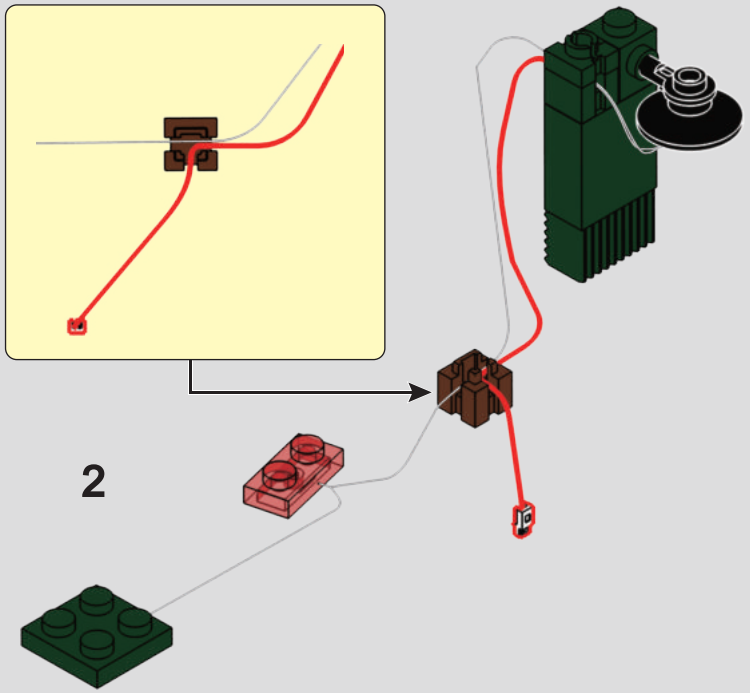

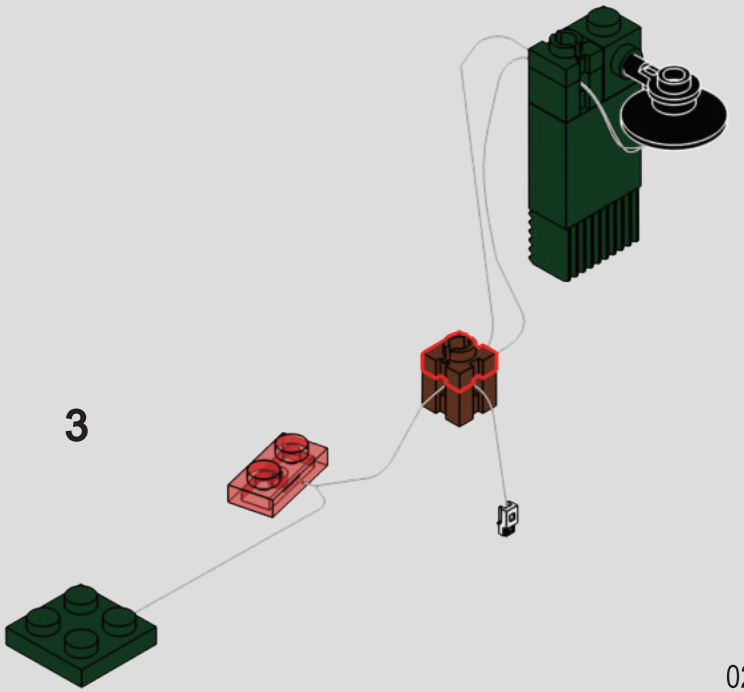

28

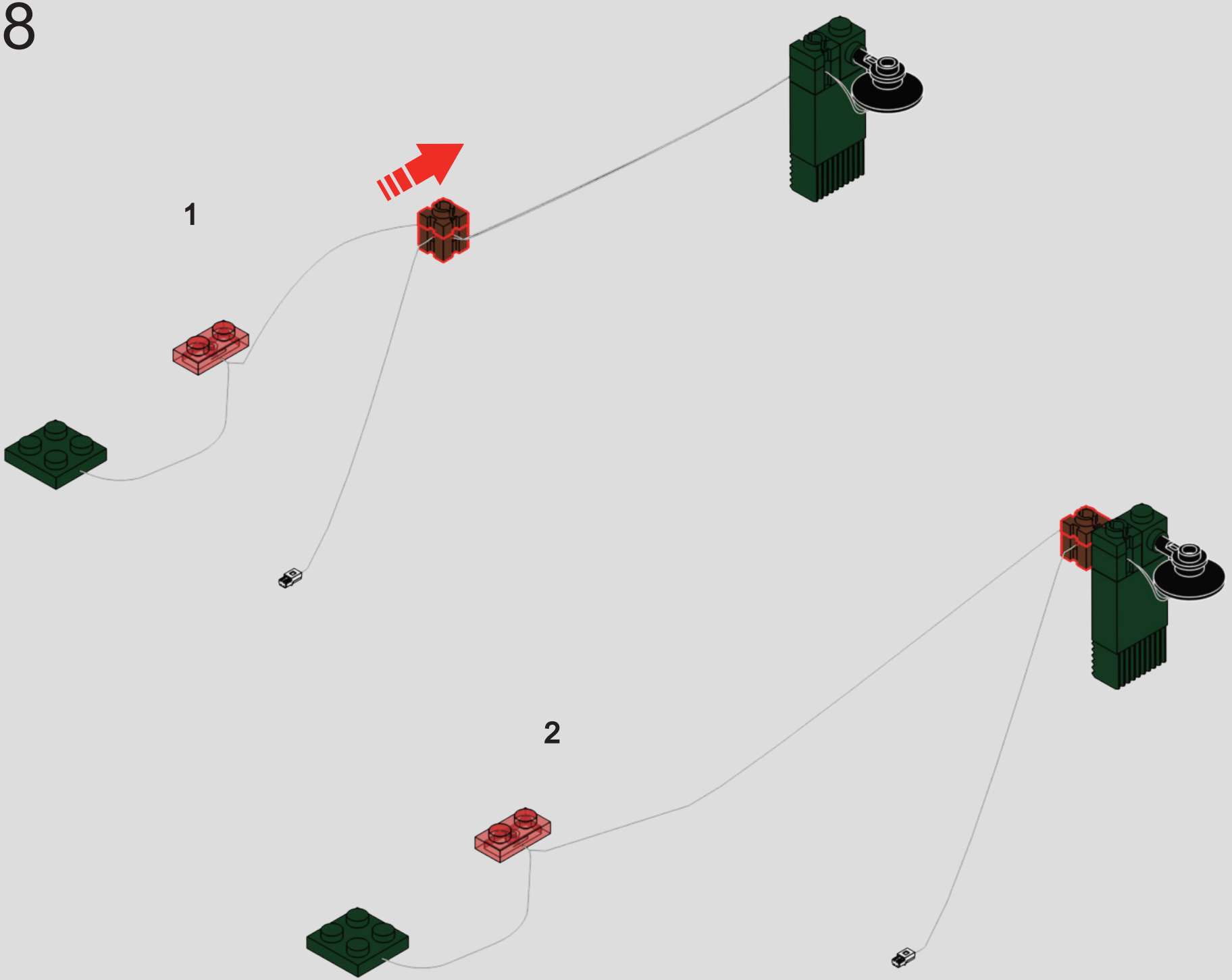

29

1

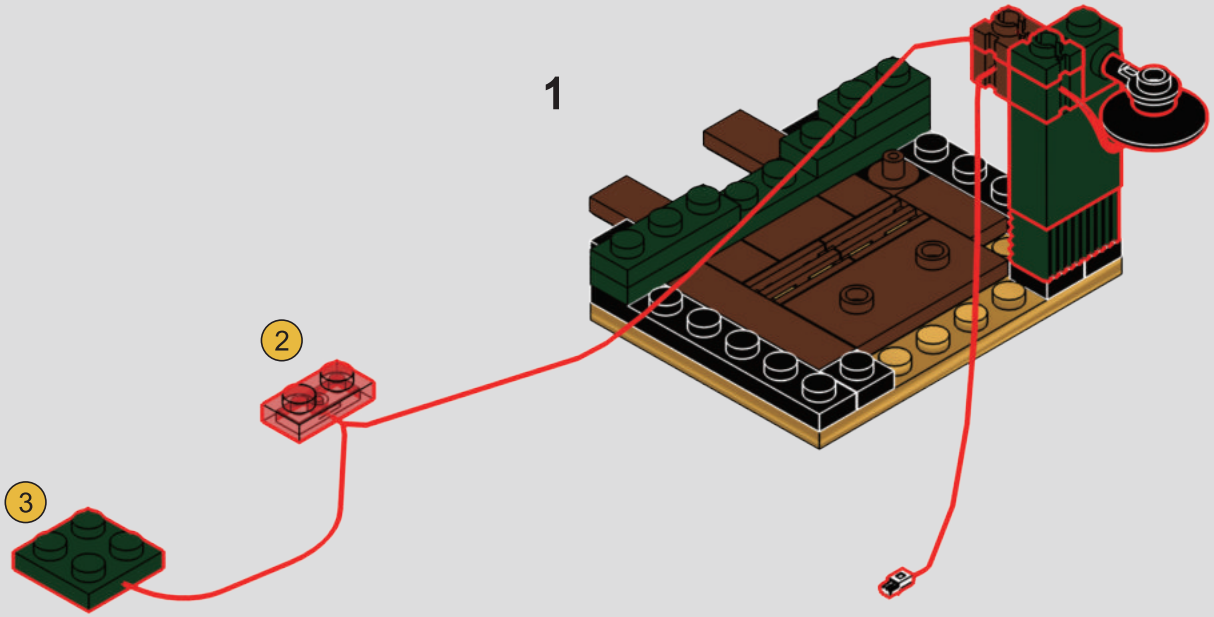

2

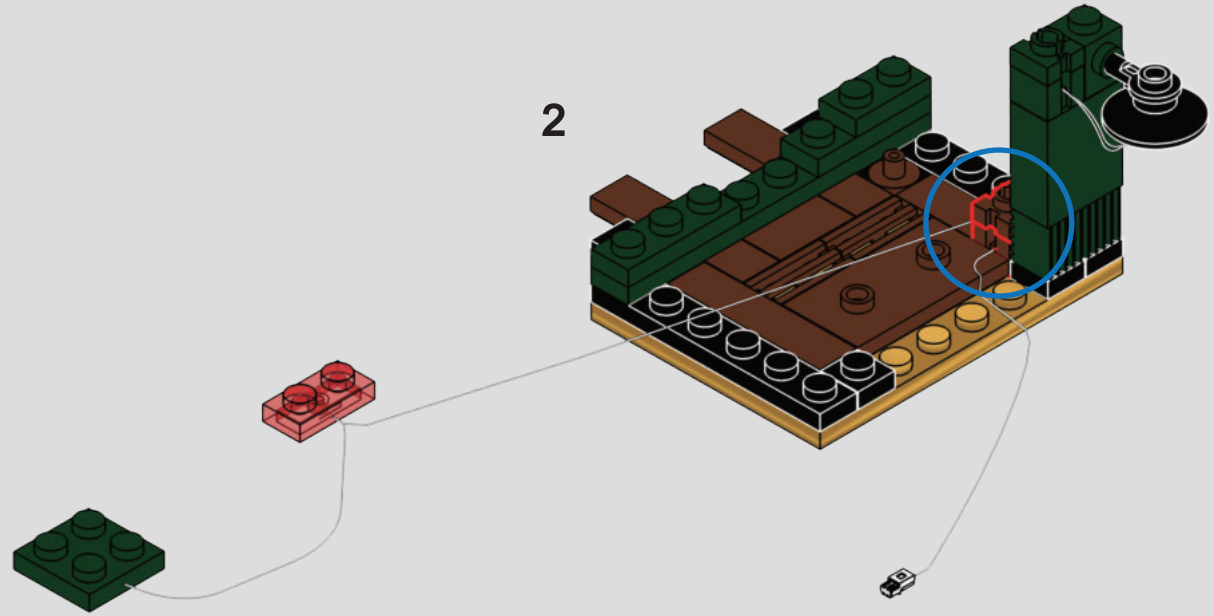

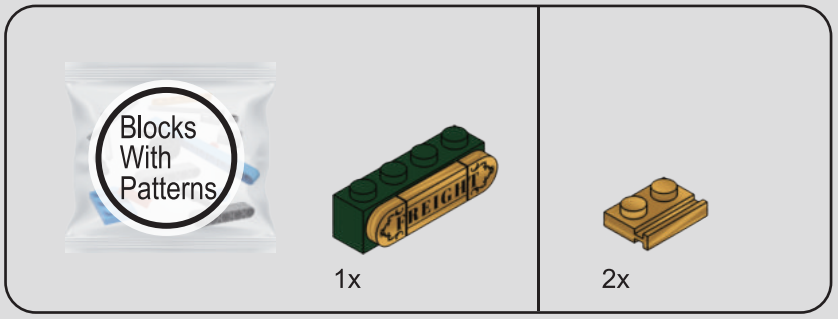

30

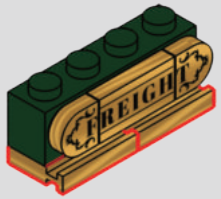

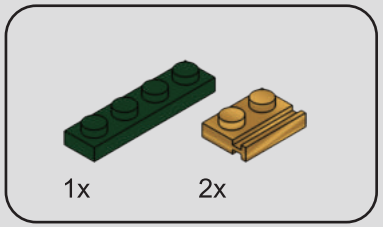

31

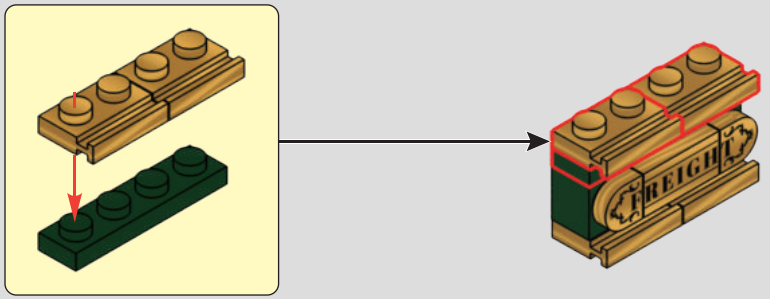

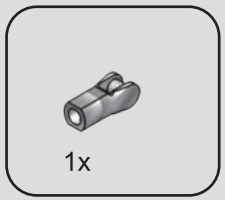

32

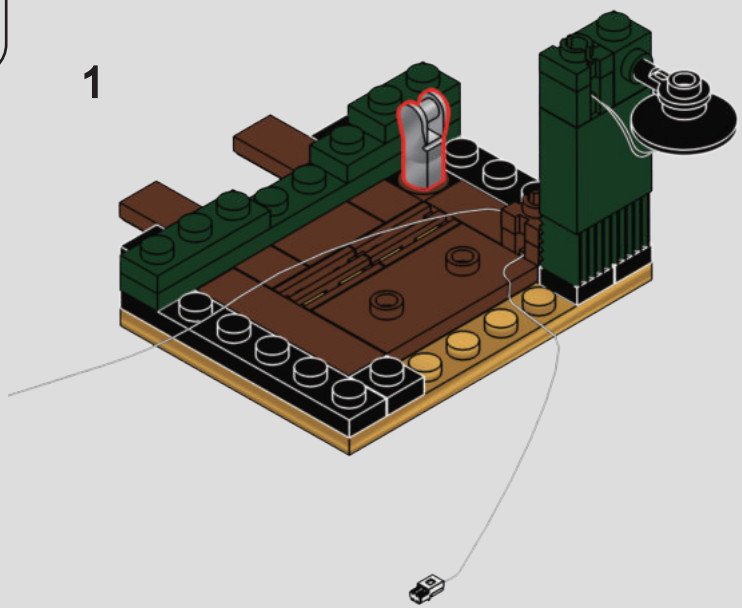

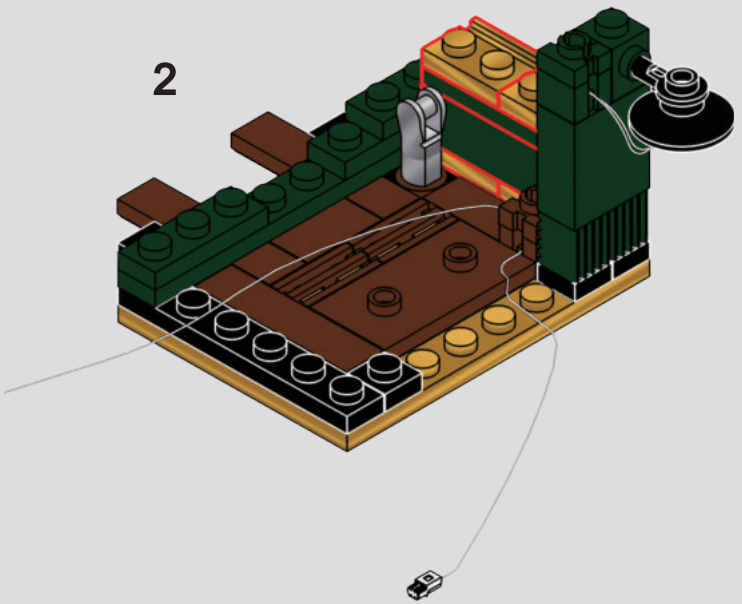

2x

33

1

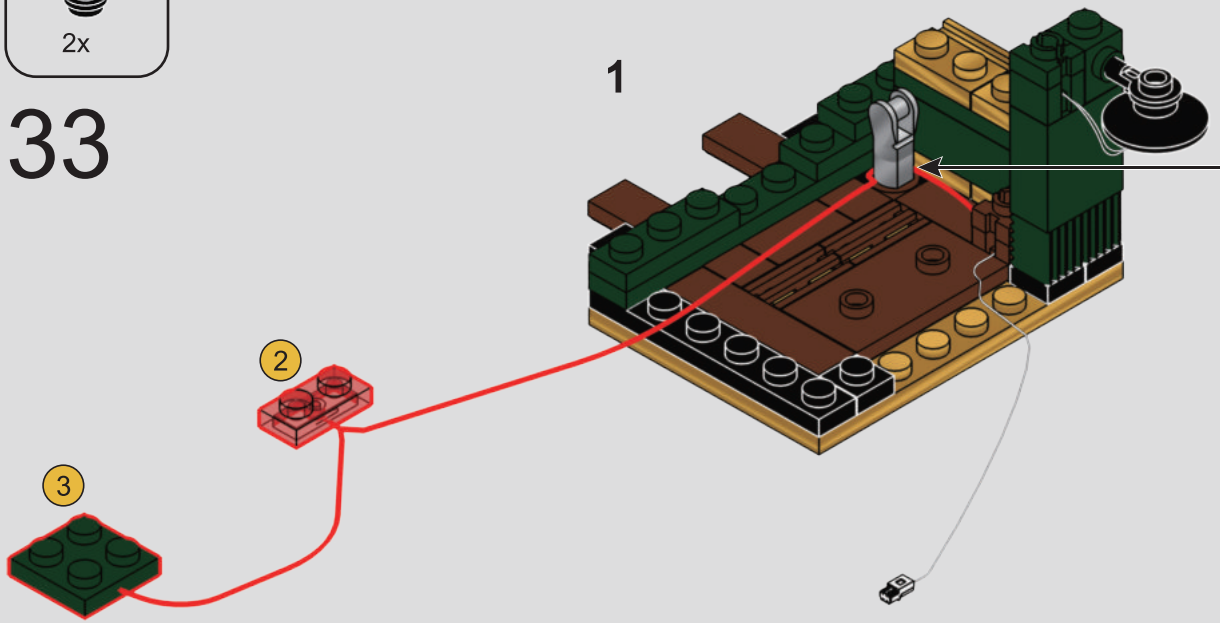

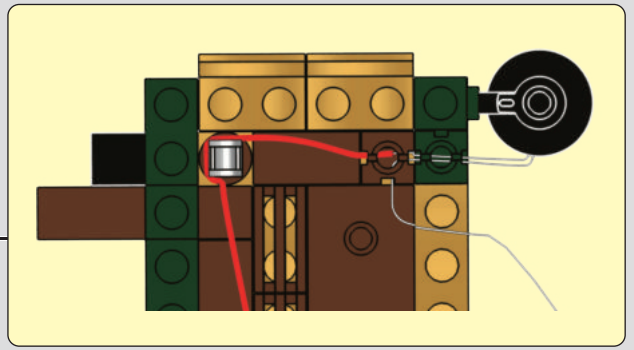

2

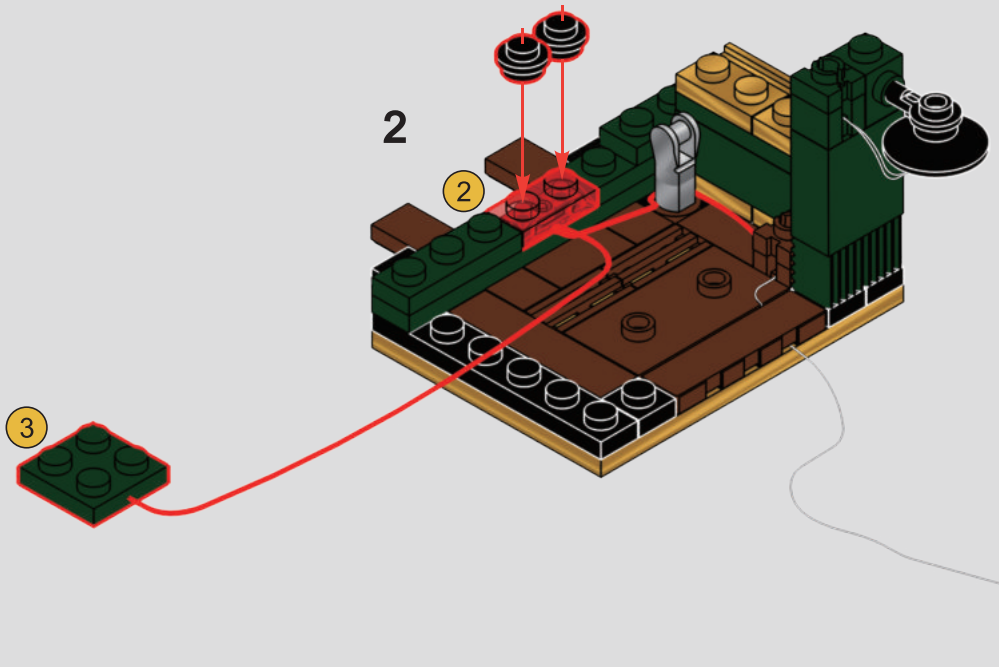

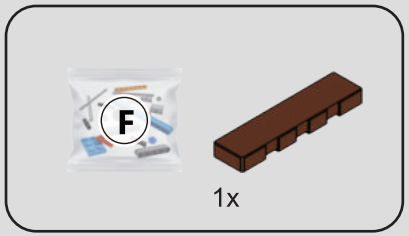

34

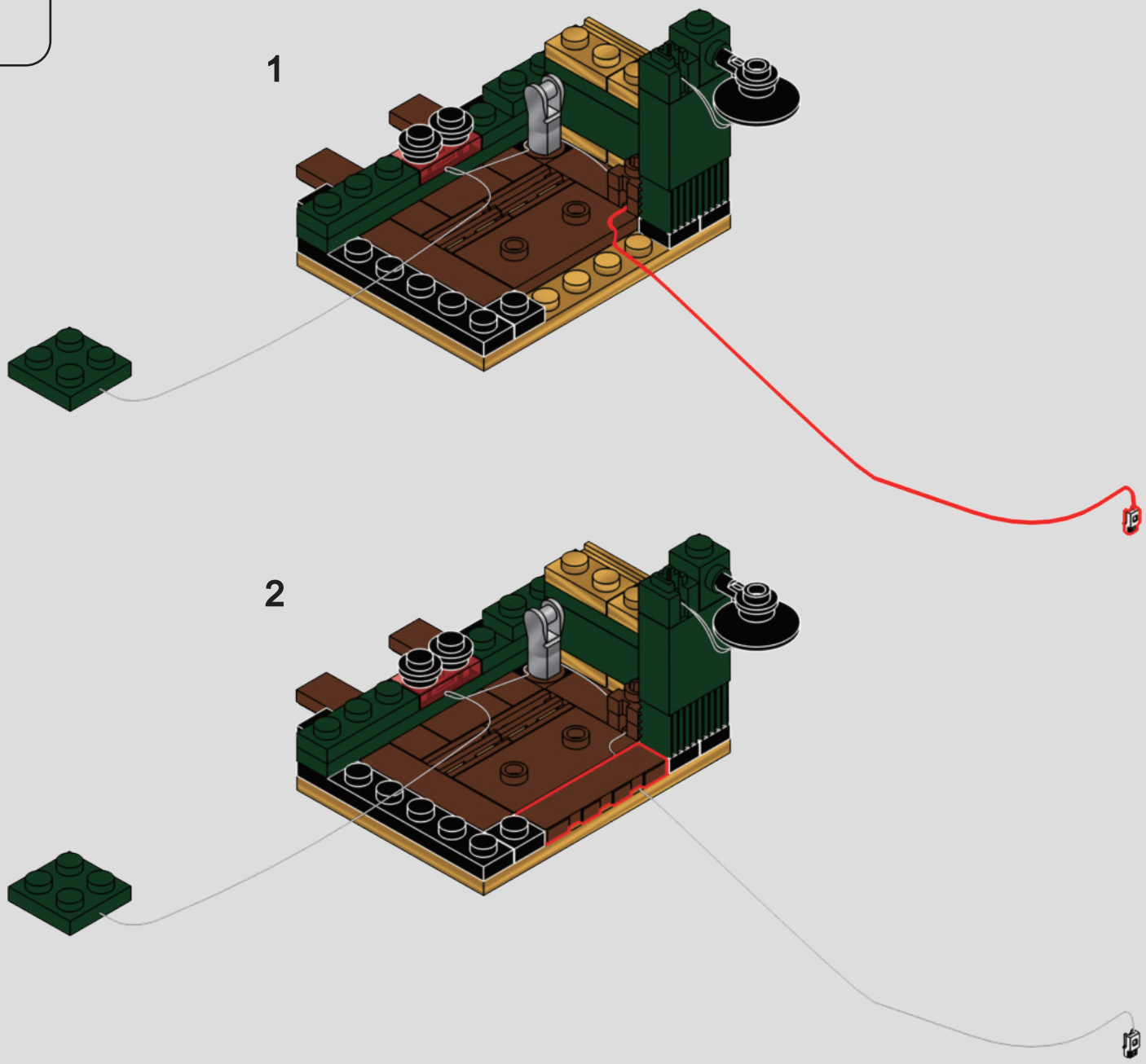

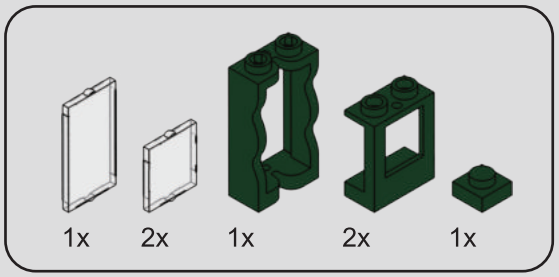

35

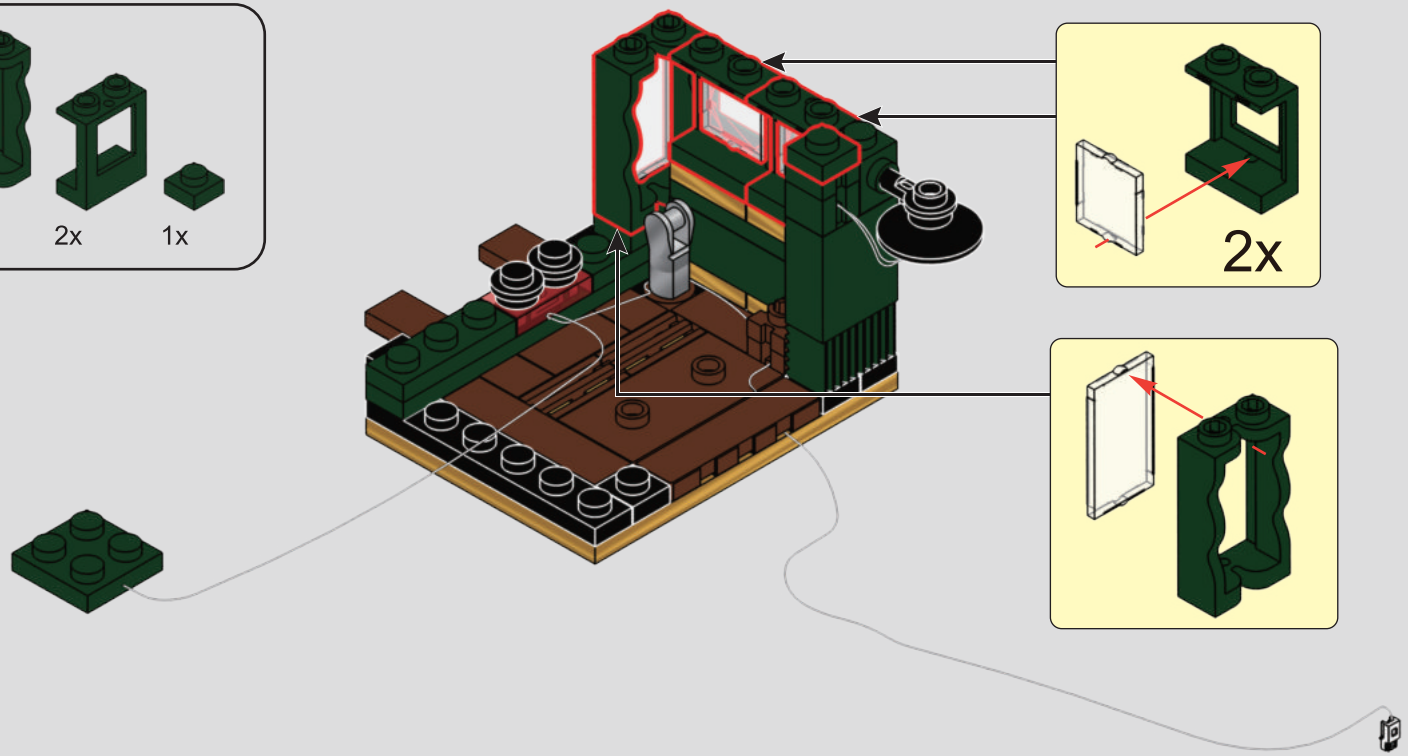

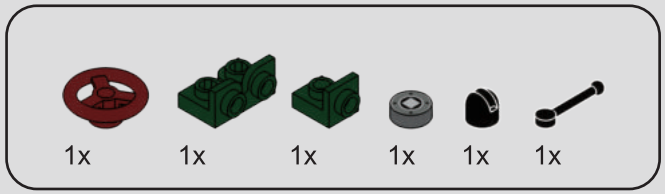

36

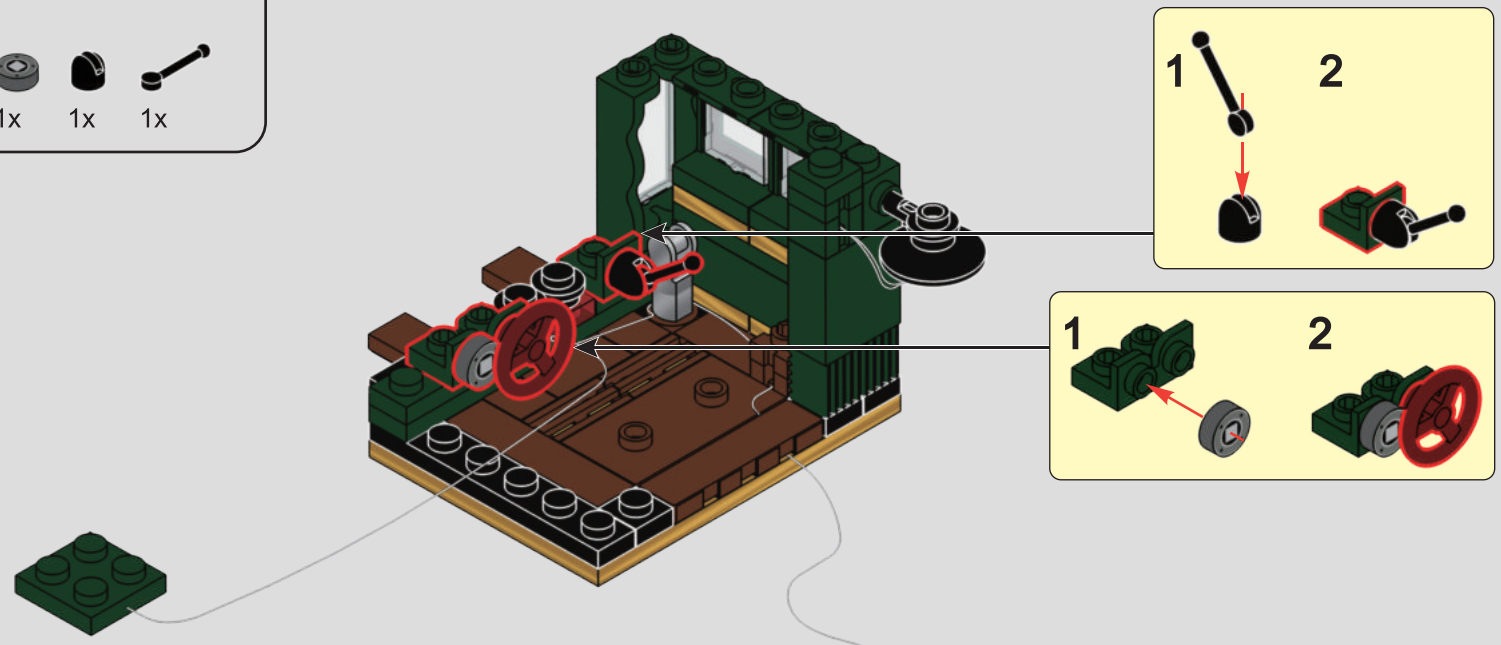

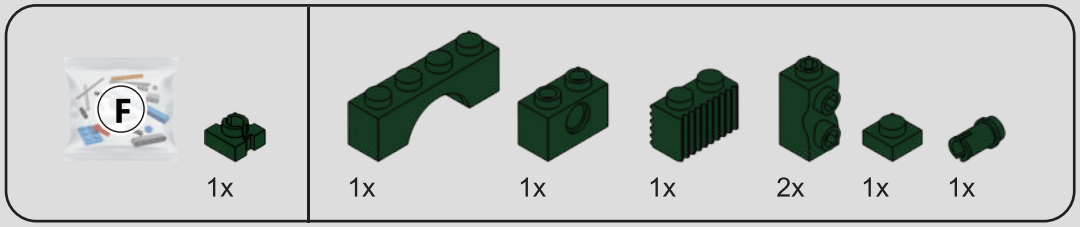

37

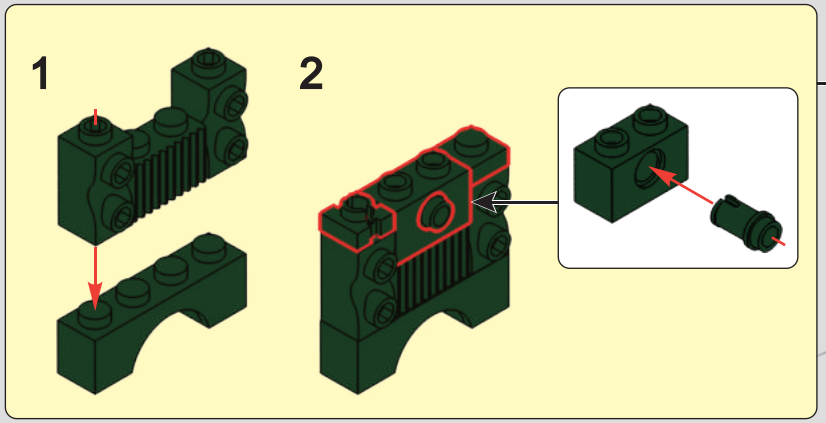

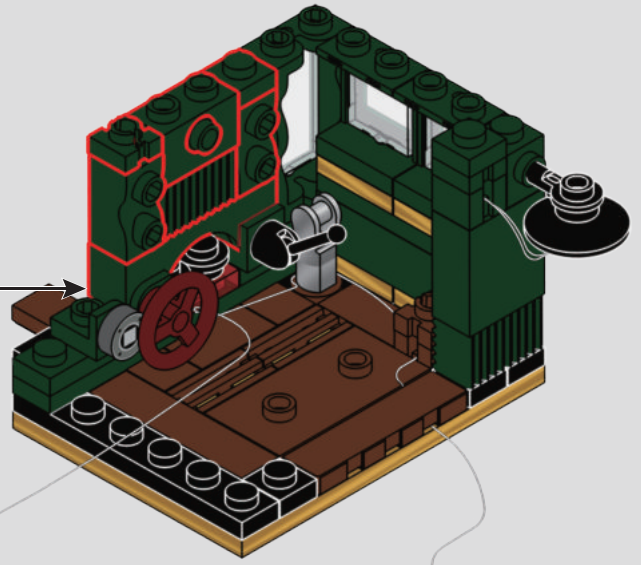

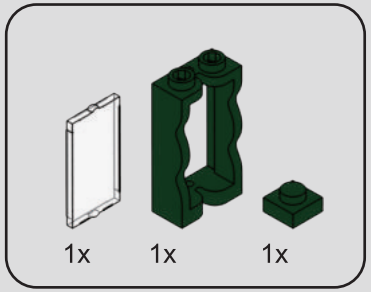

38

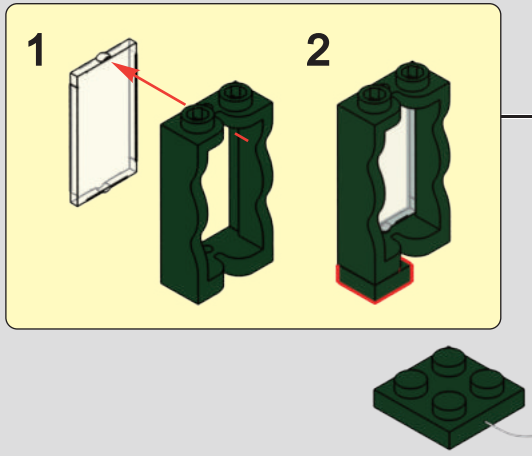

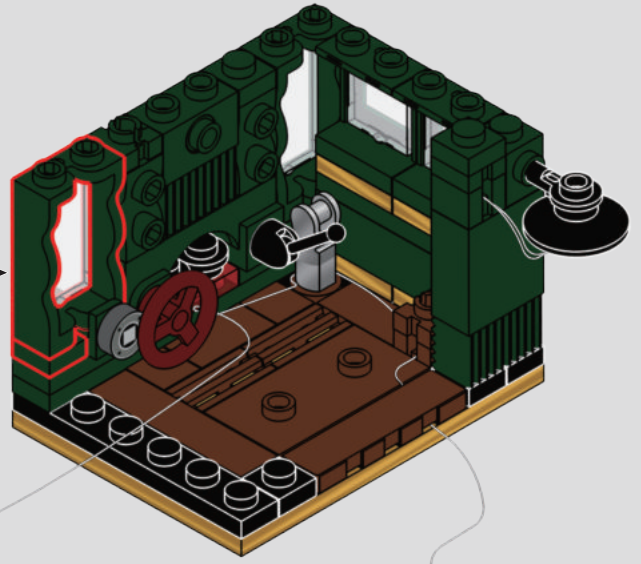

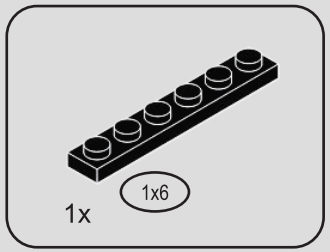

39

3

1

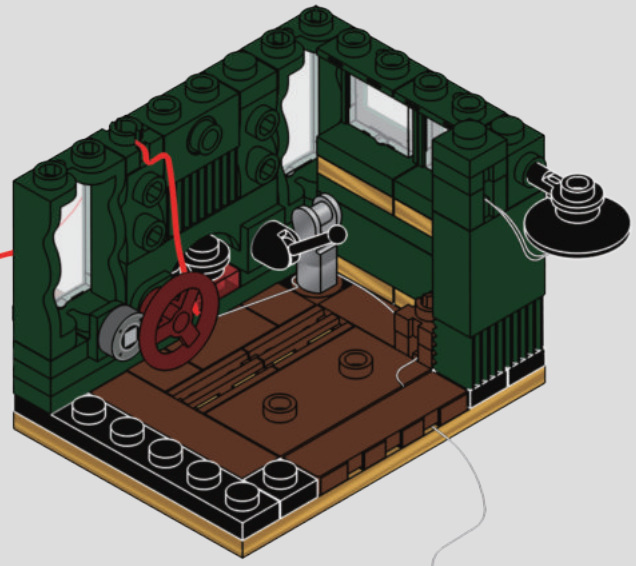

2

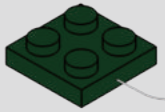

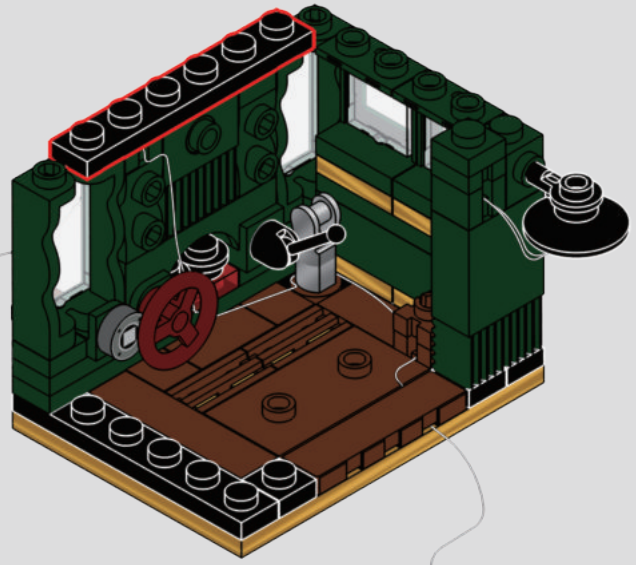

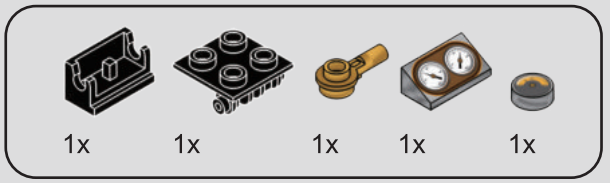

40

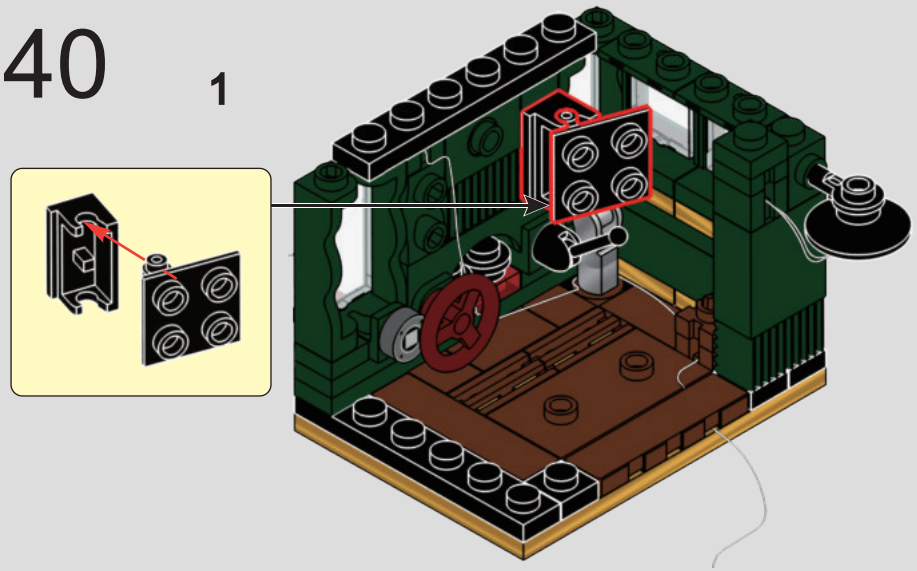

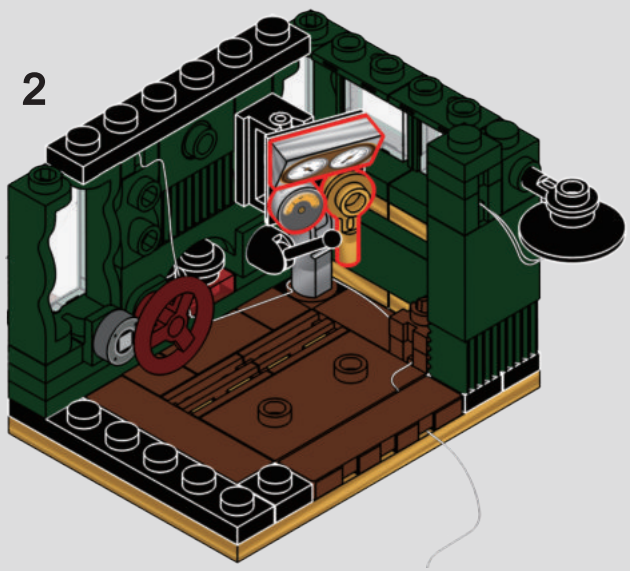

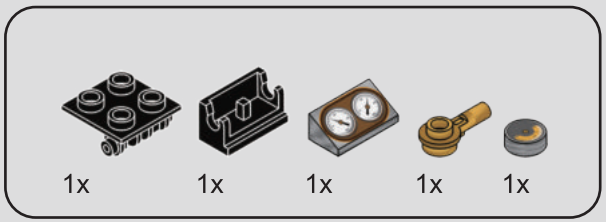

41

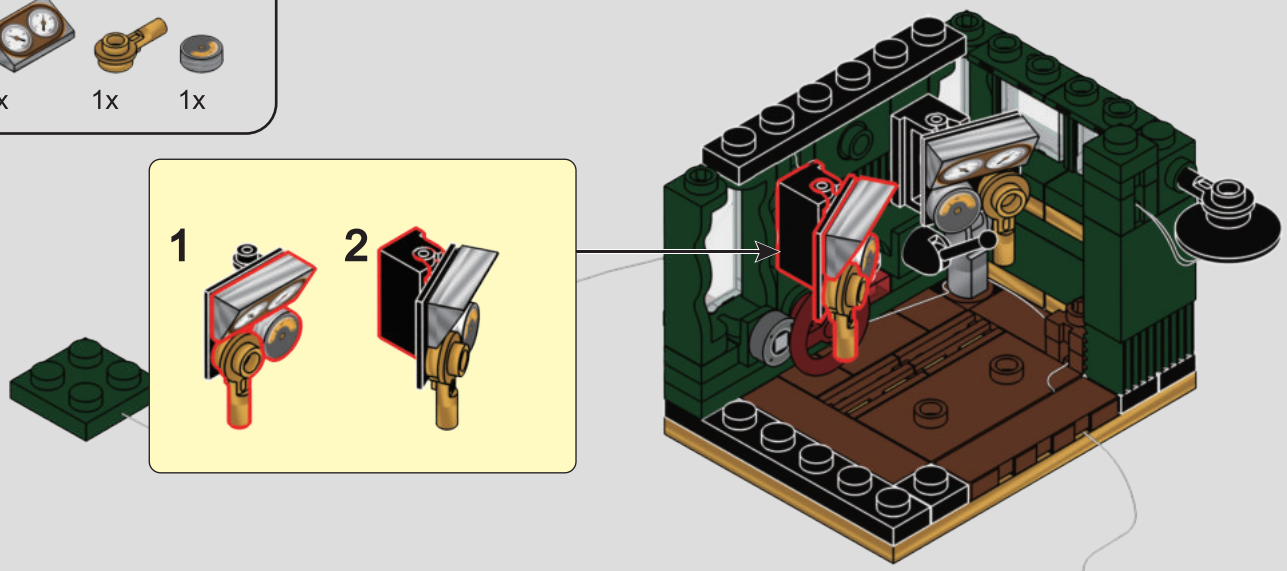

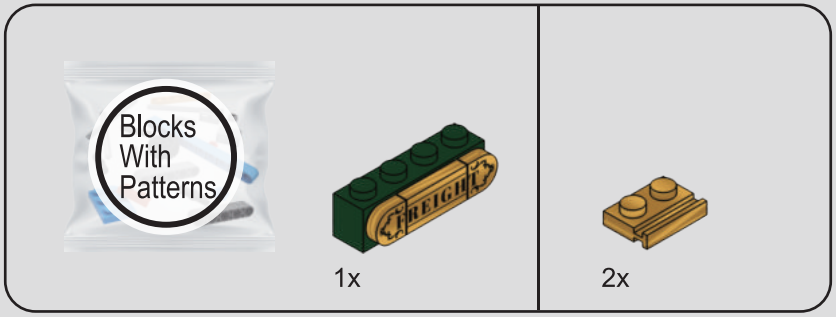

42

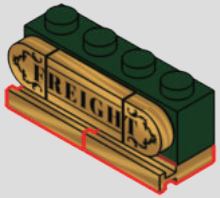

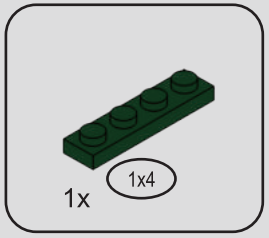

43

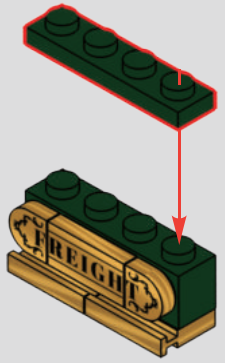

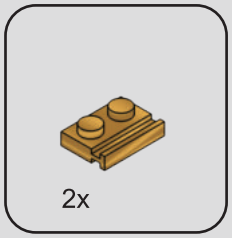

44

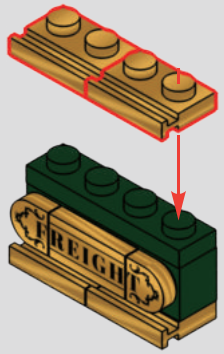

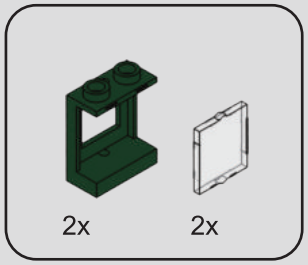

45

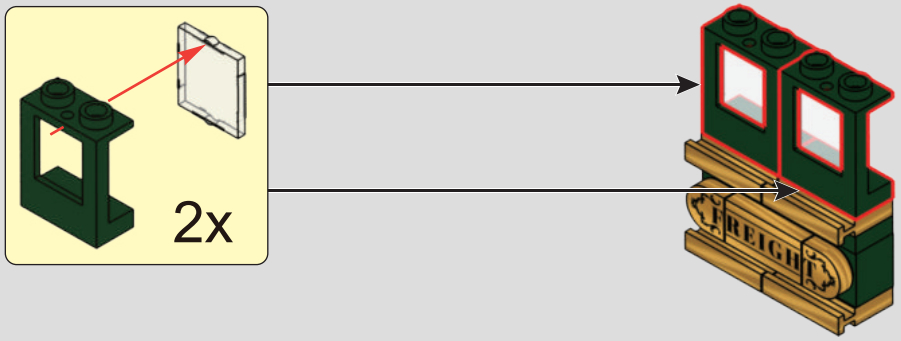

46

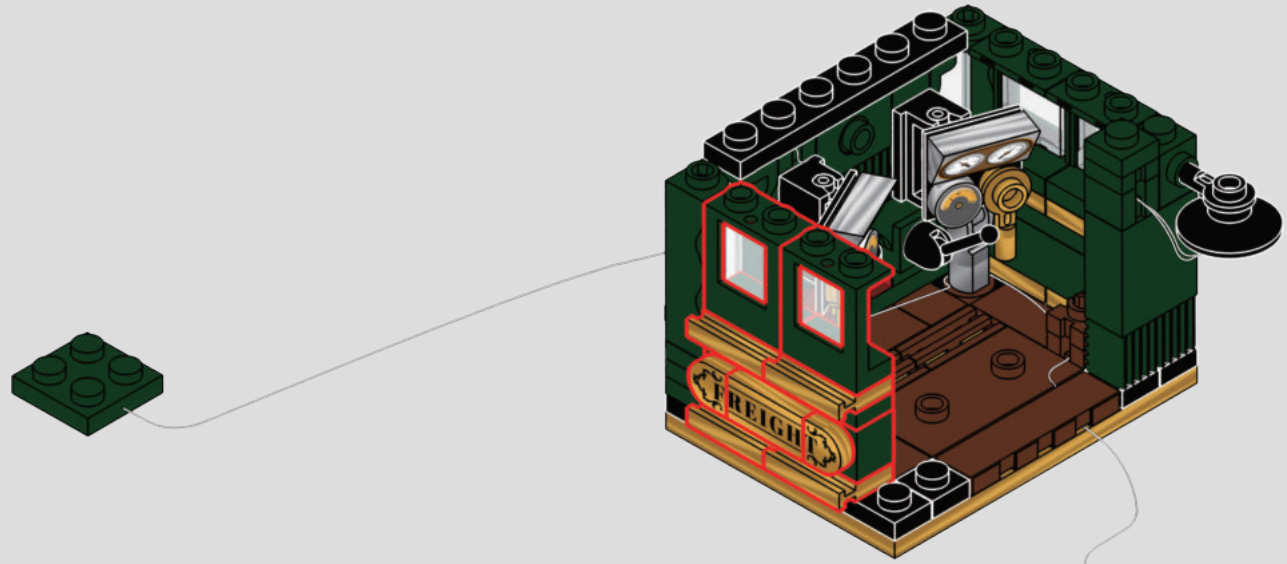

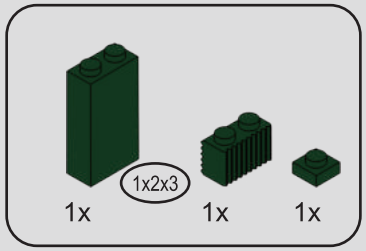

47

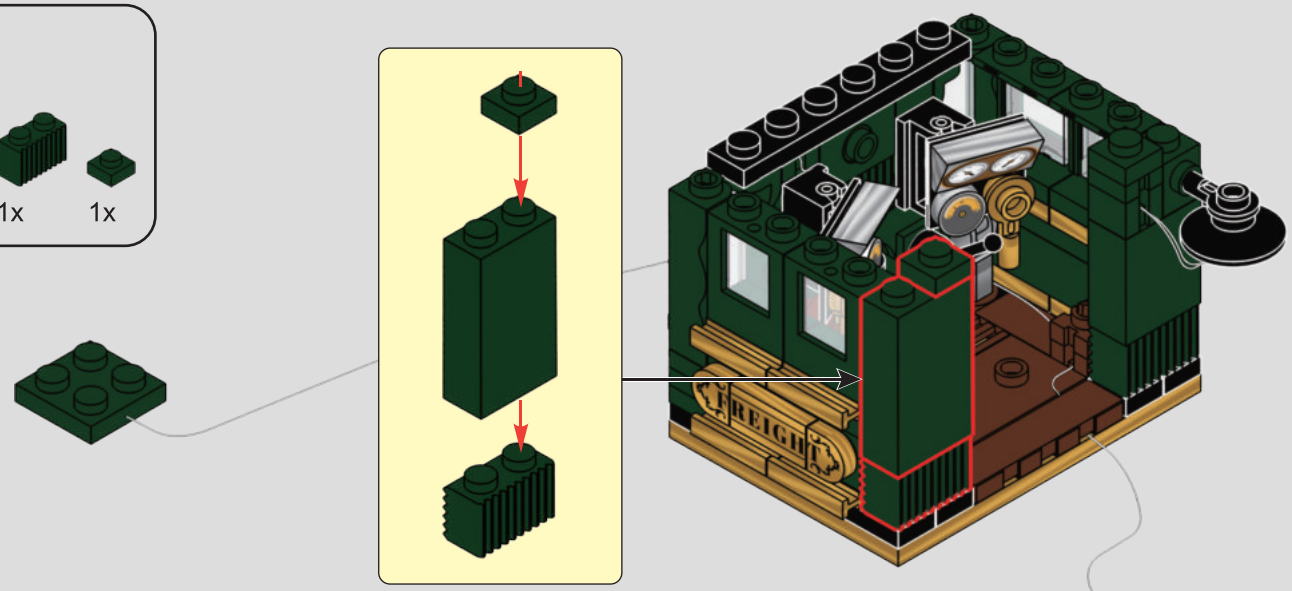

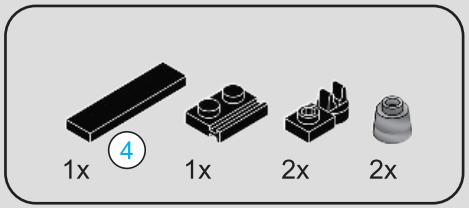

48

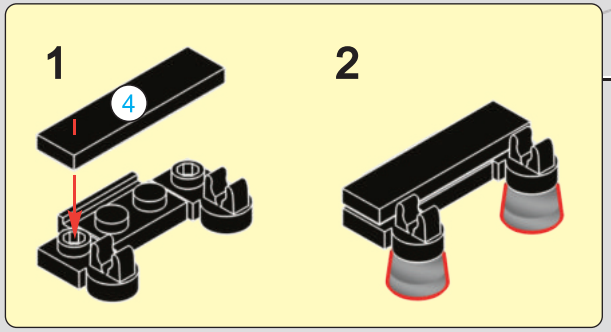

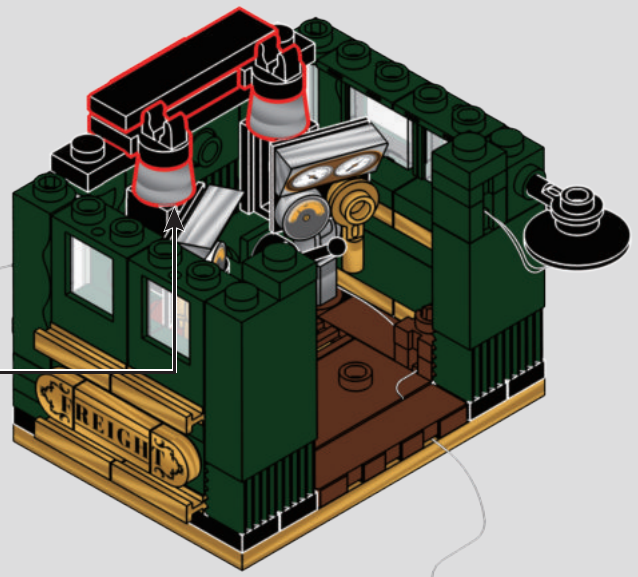

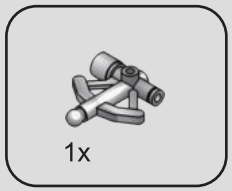

49

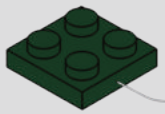

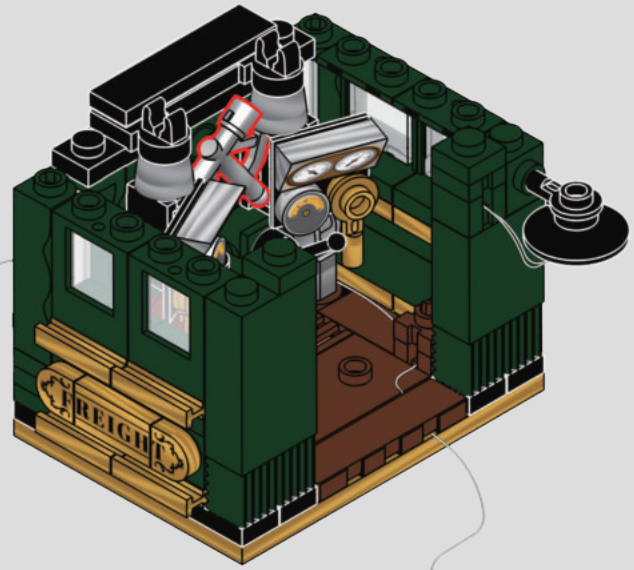

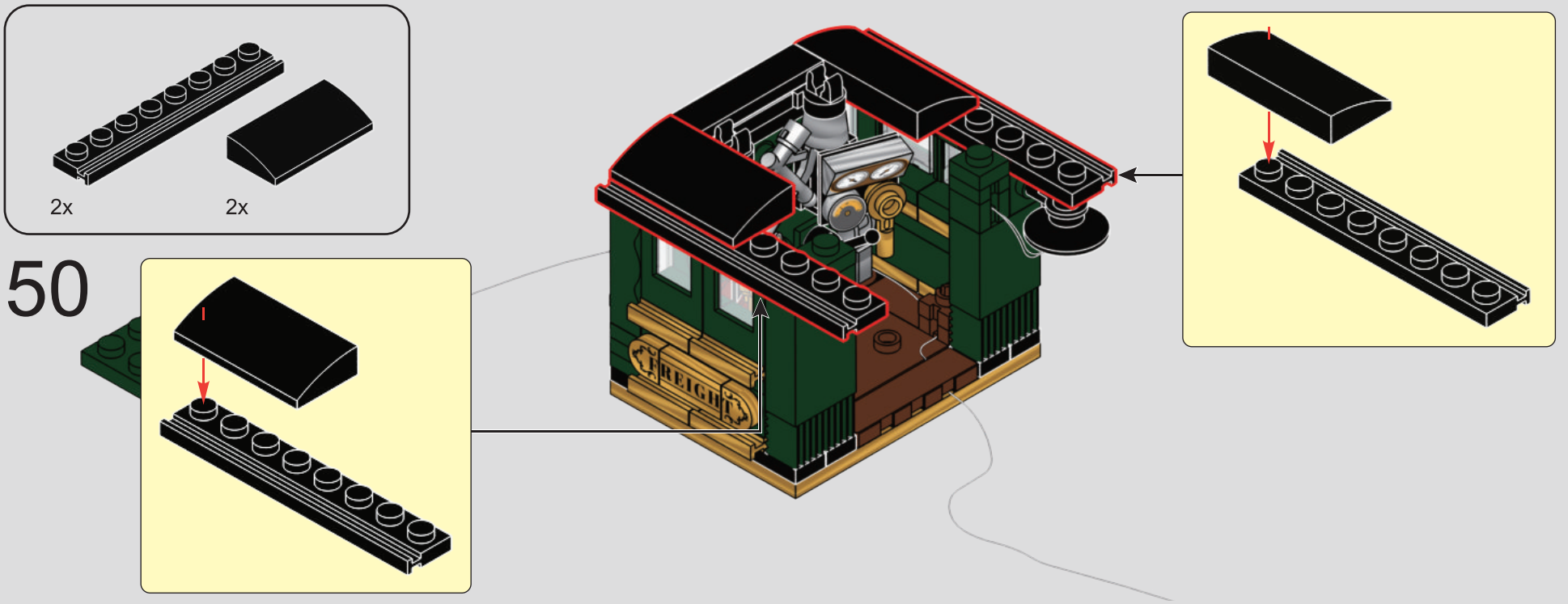

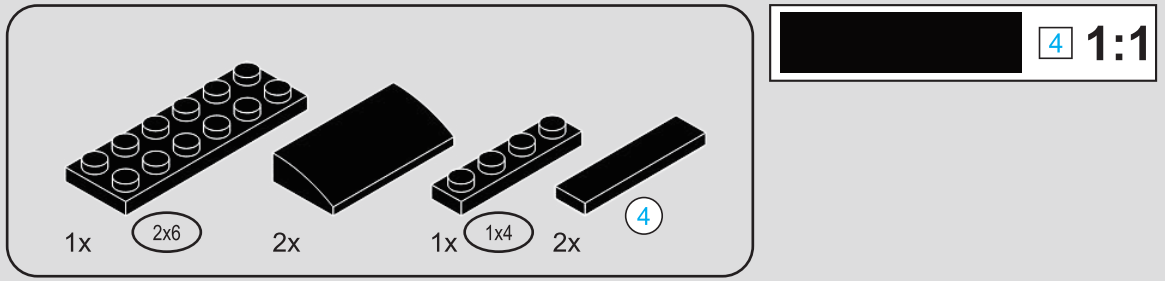

51

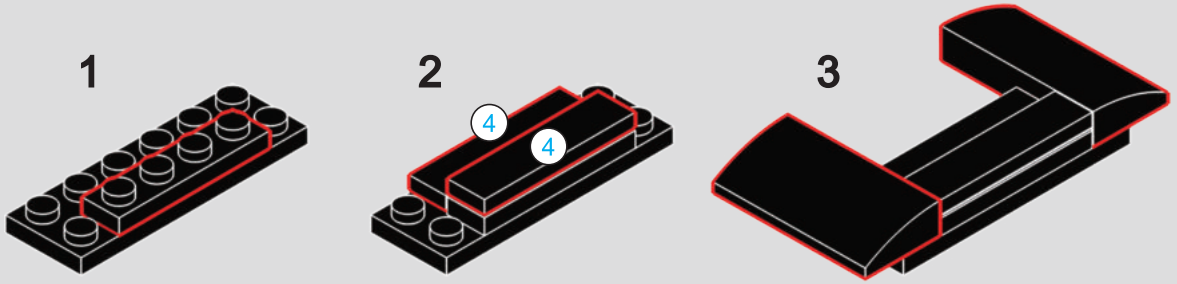

52

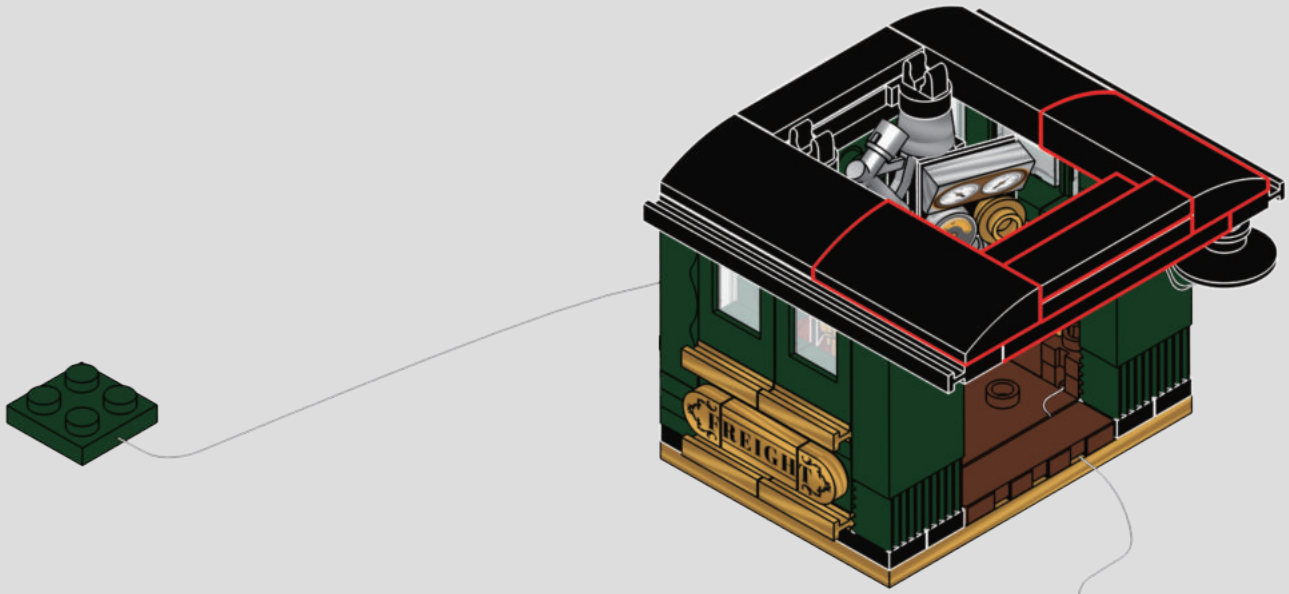

53

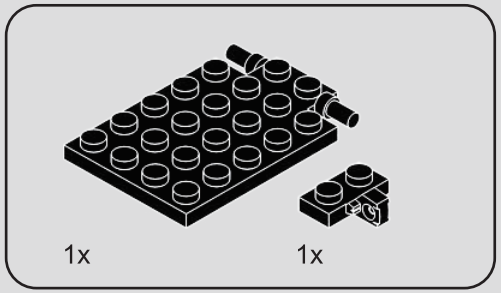

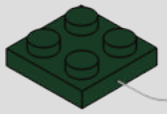

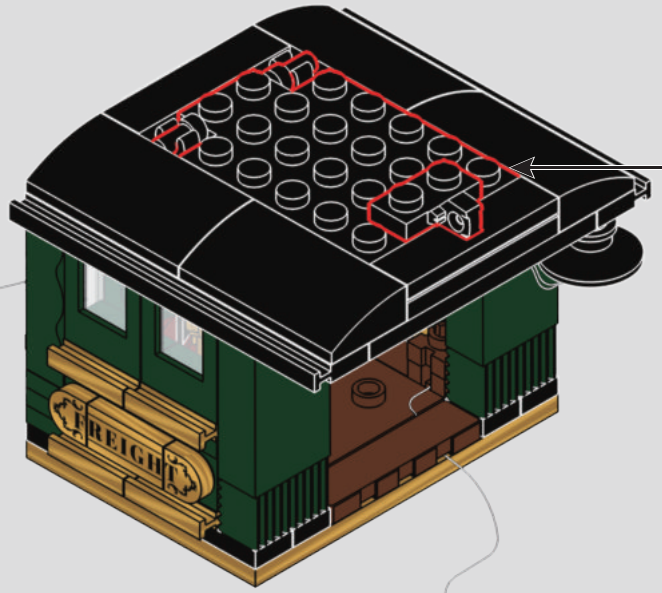

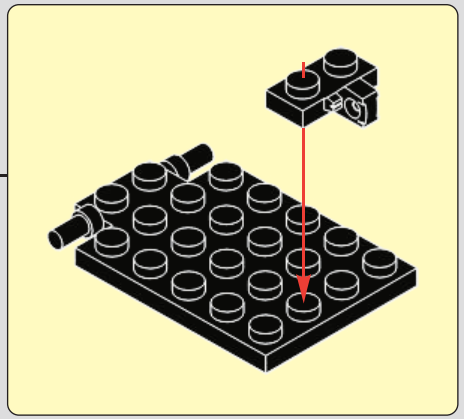

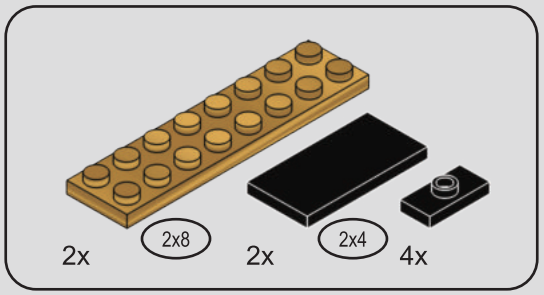

54

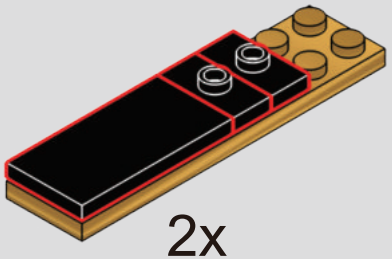

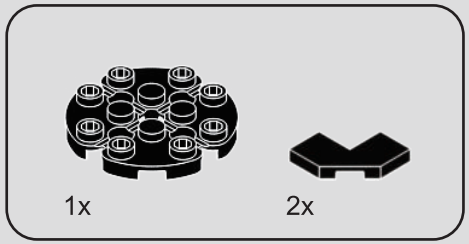

55

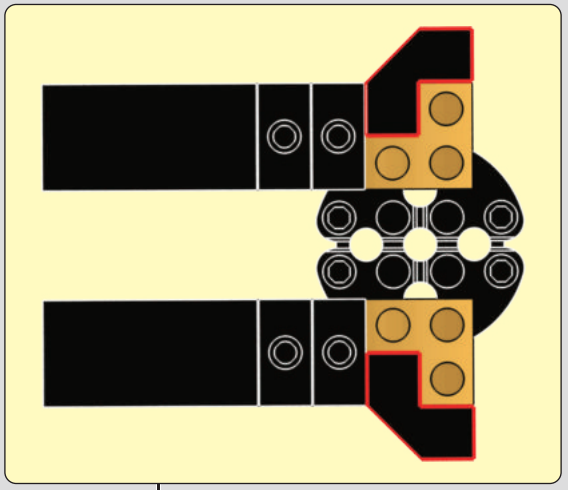

1

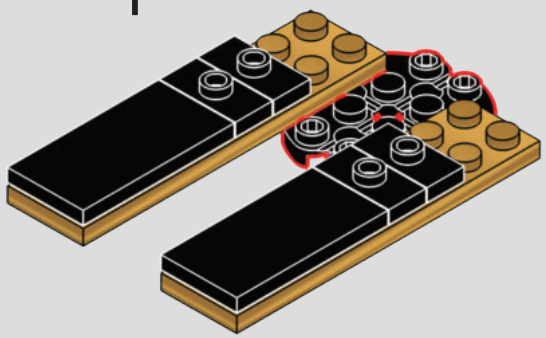

2

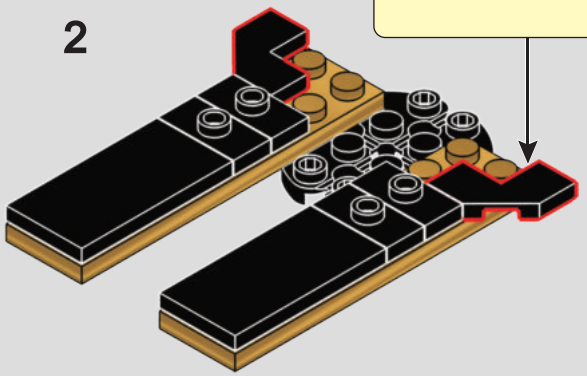

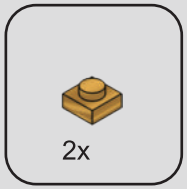

56

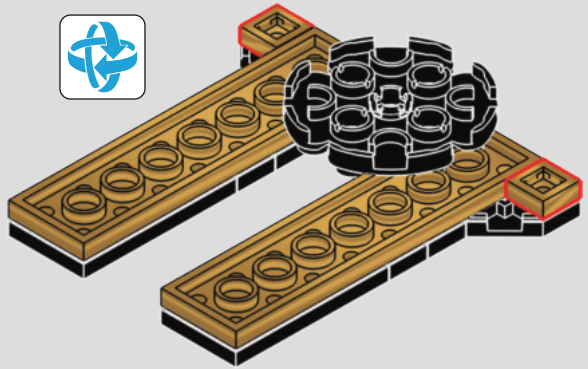

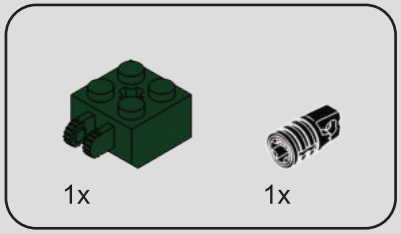

57

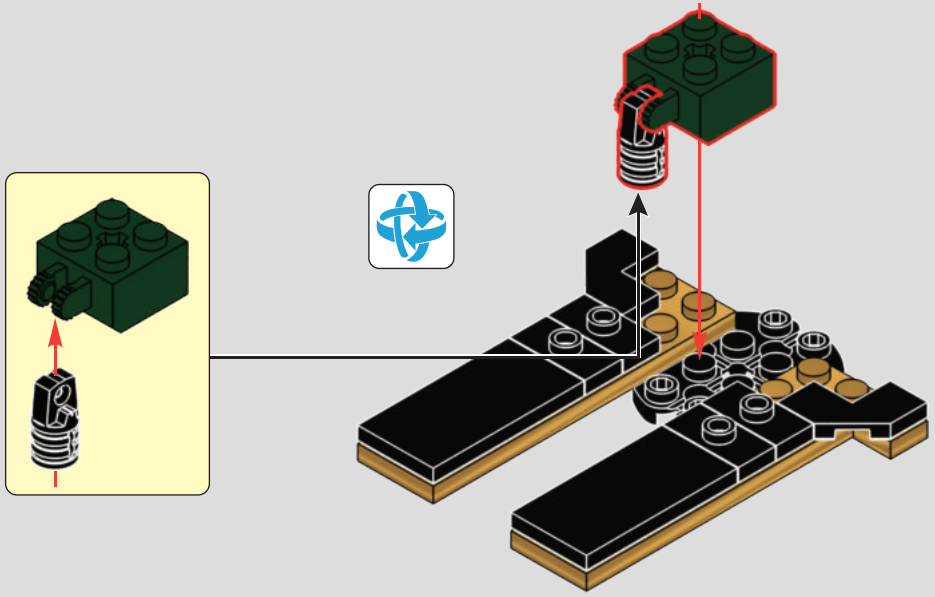

58

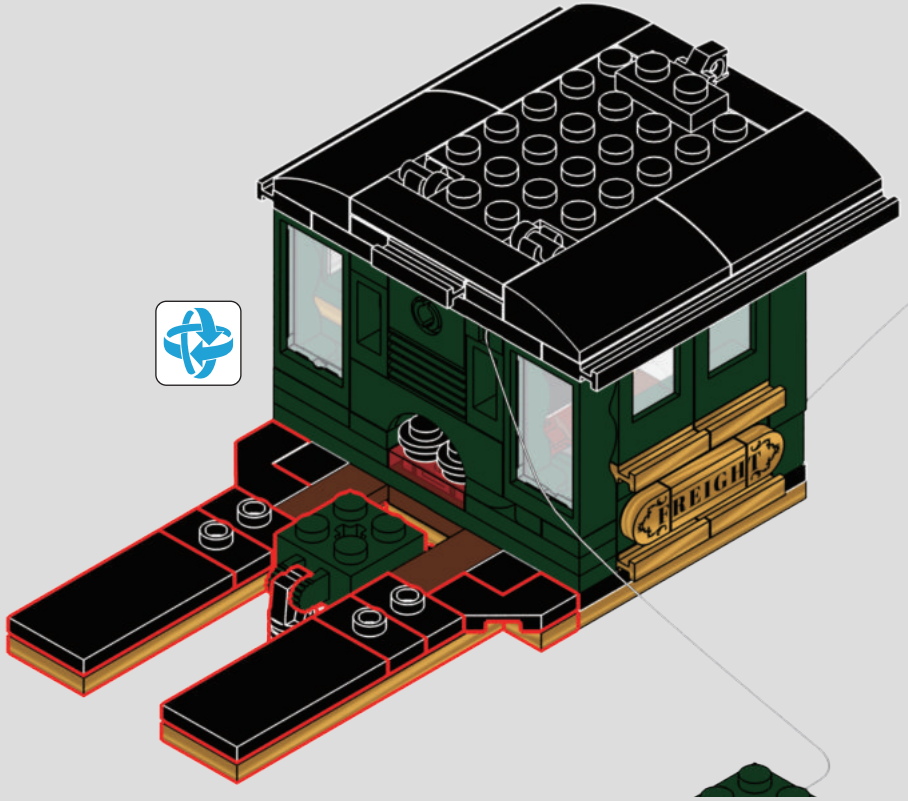

59

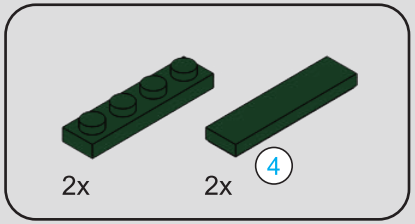

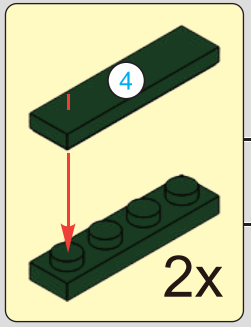

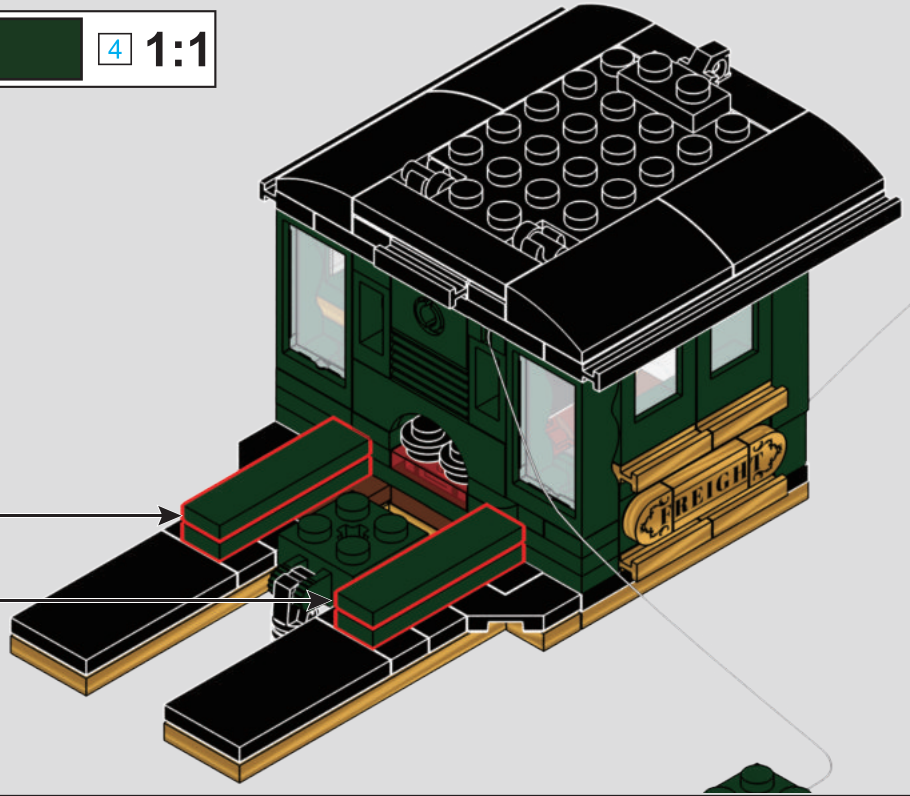

60

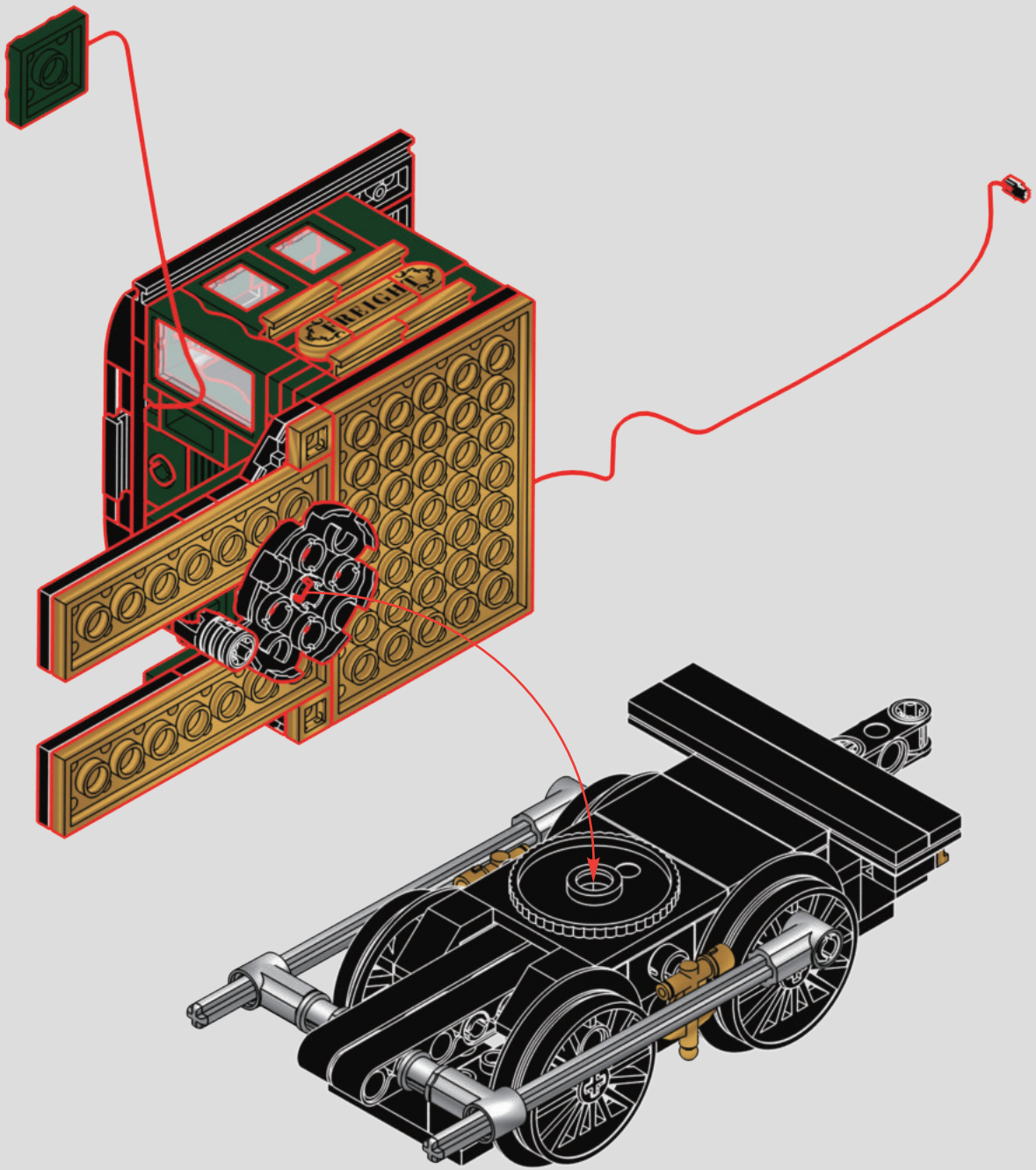

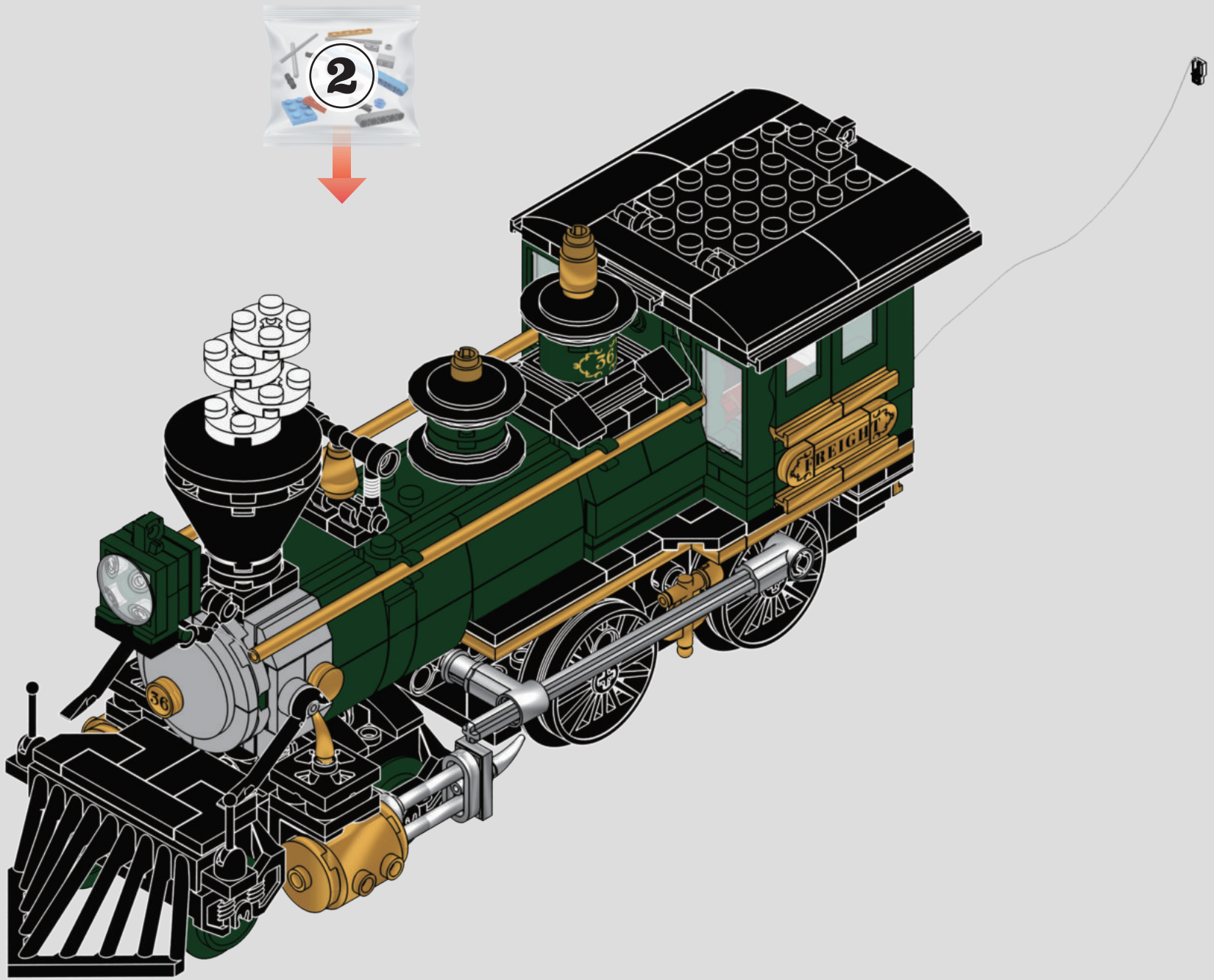
2
36
36
FREIGHT

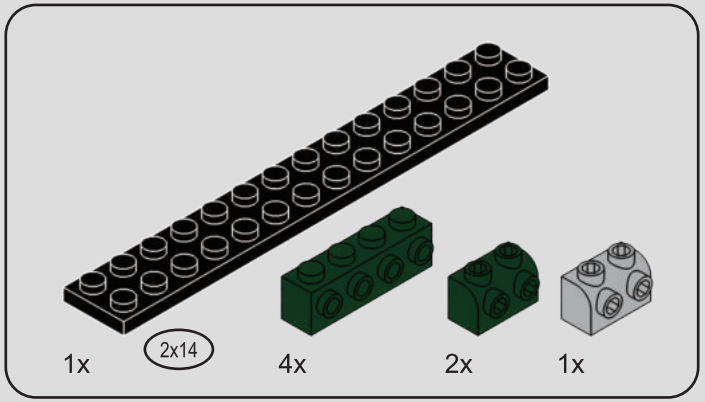

61

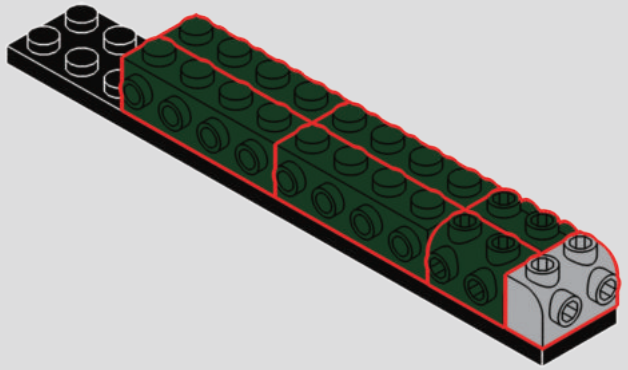

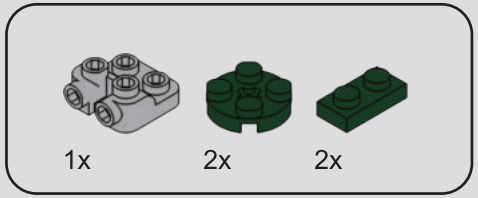

62

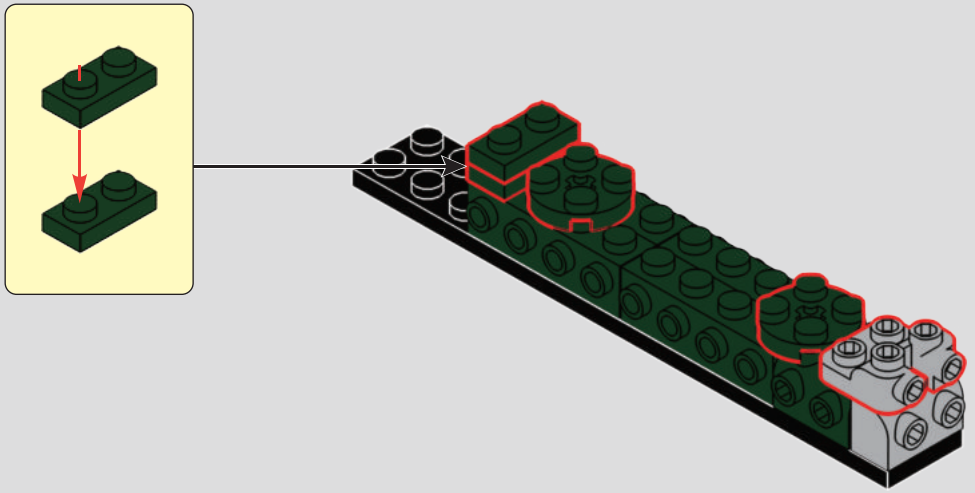

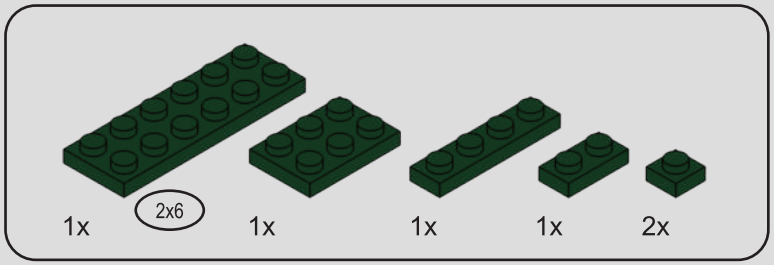

63

64

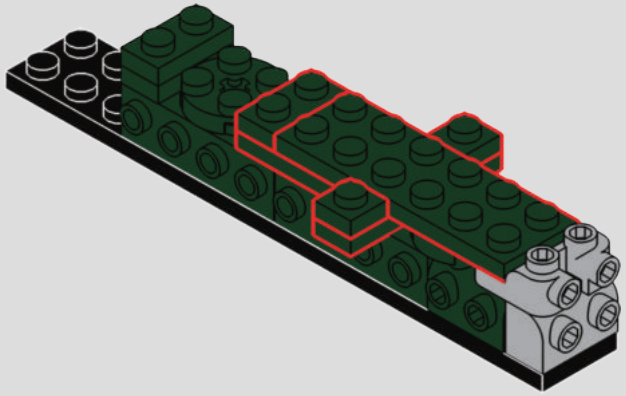

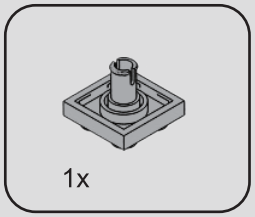

65

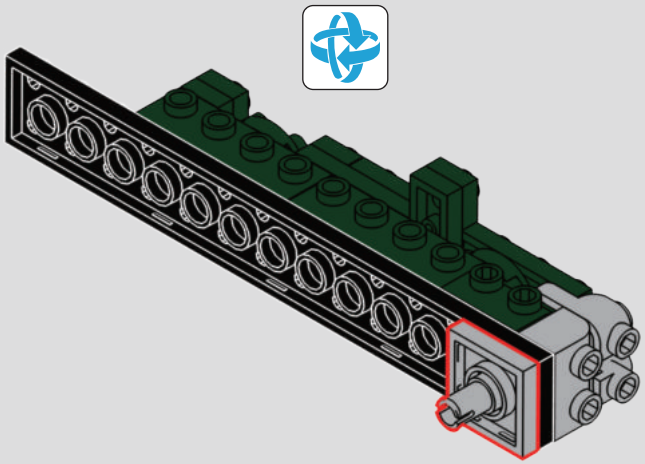

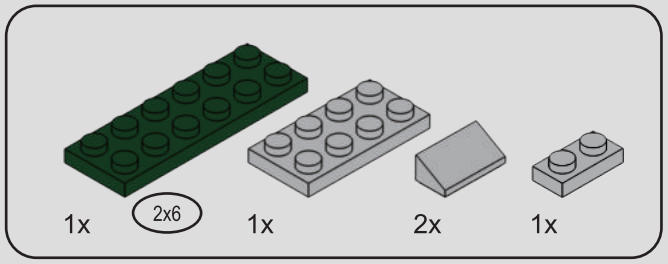

66

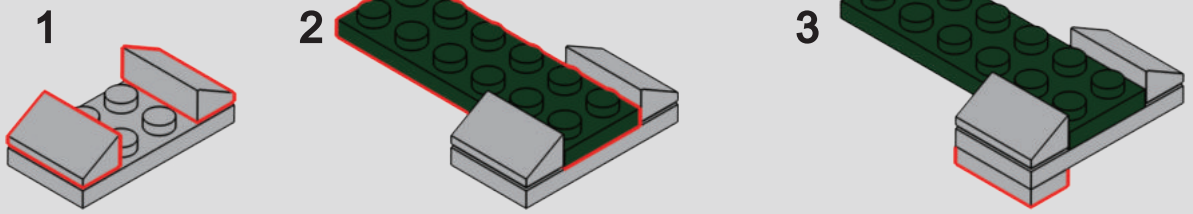

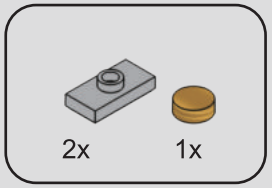

67

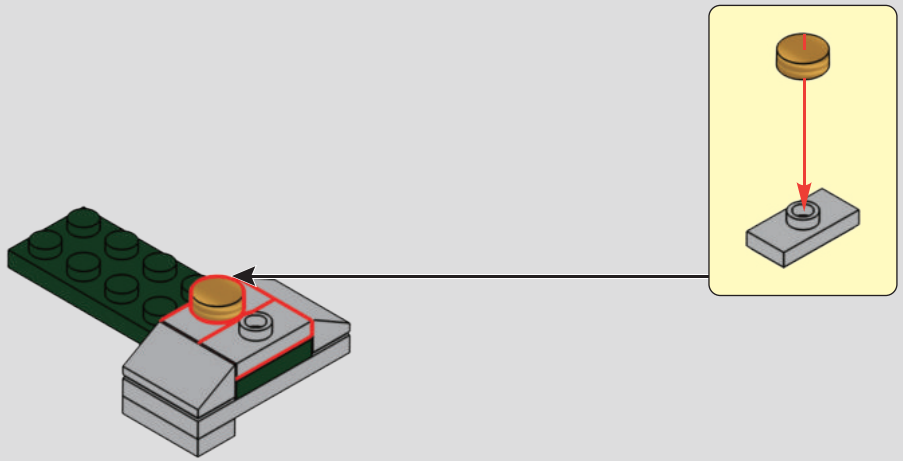

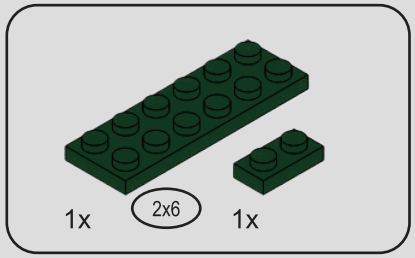

68

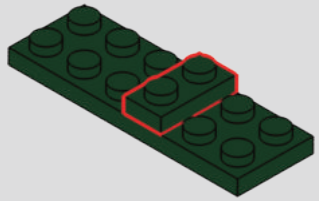

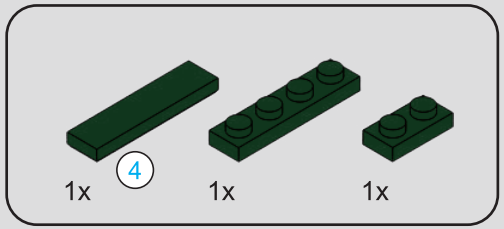

69

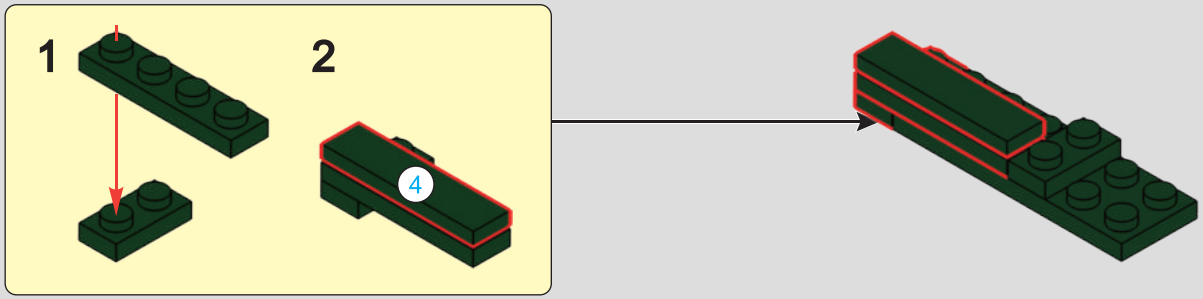

70

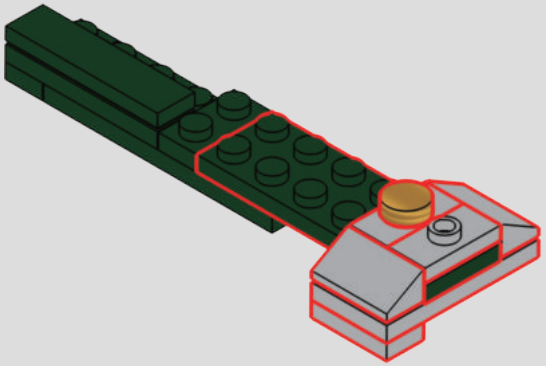

71

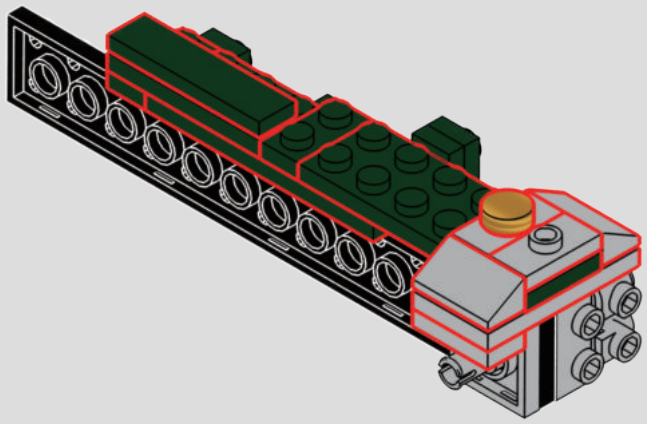

72

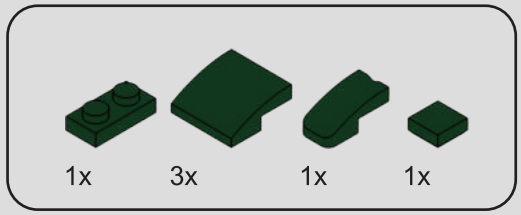

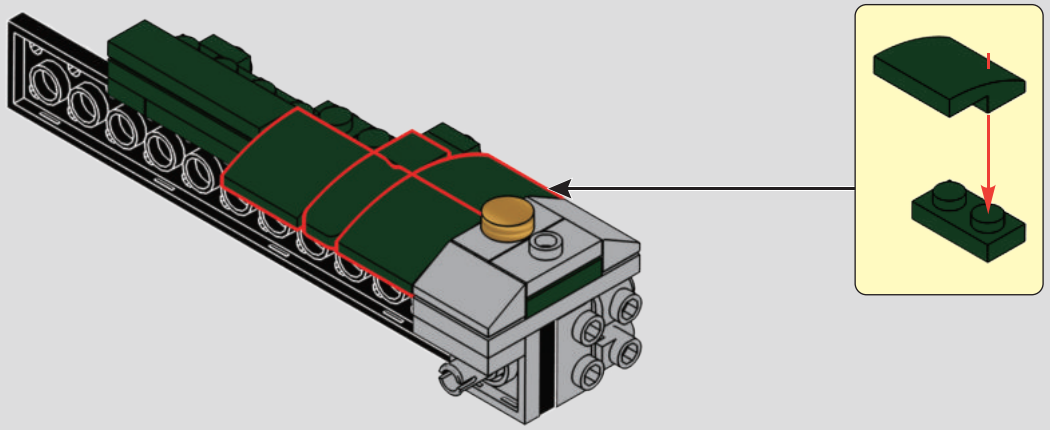

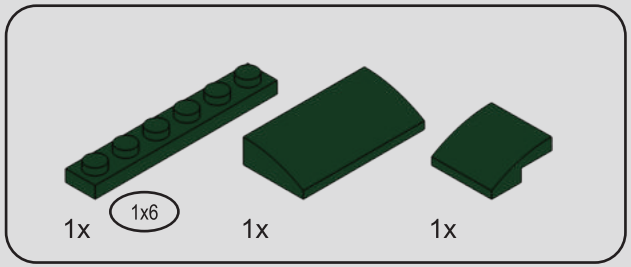

73

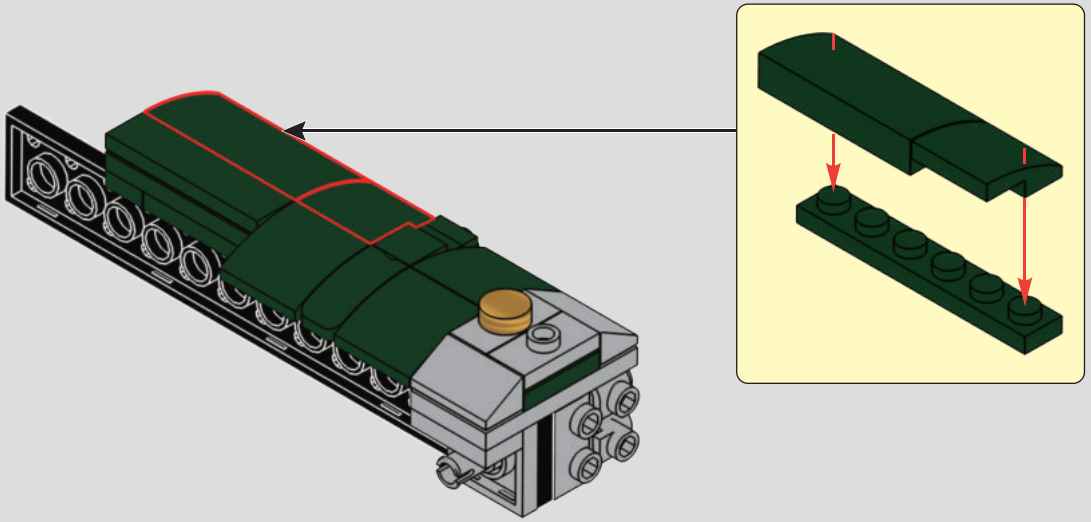

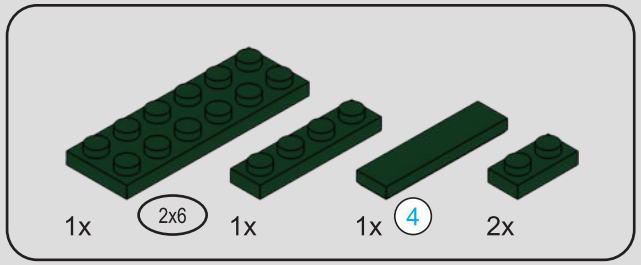

74

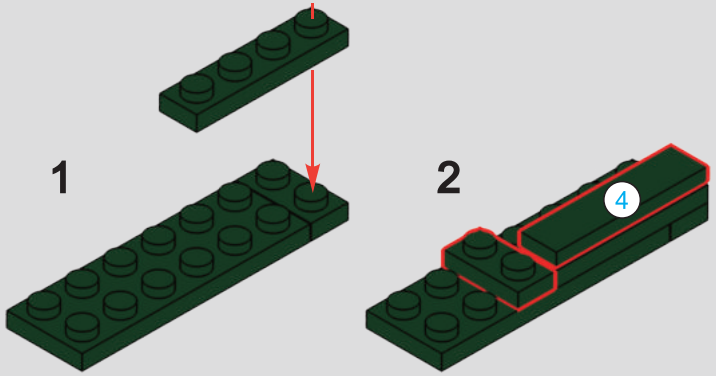

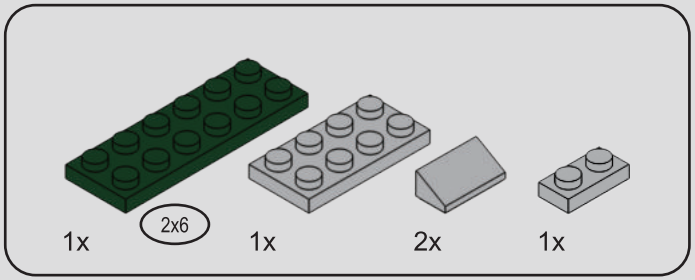

75

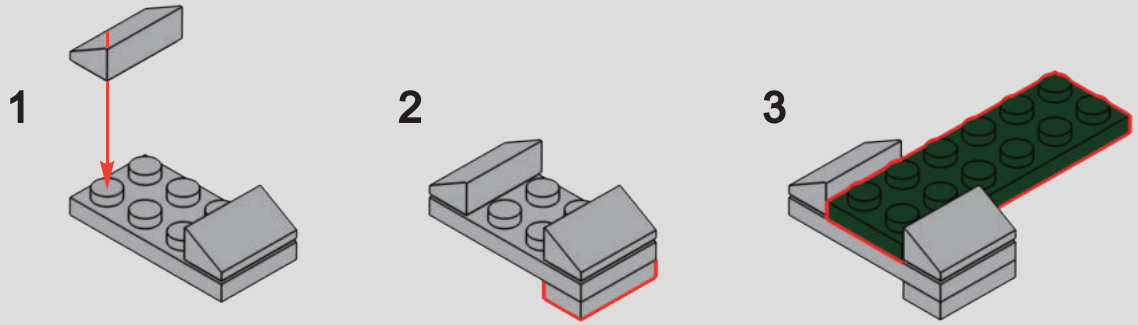

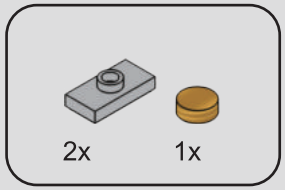

76

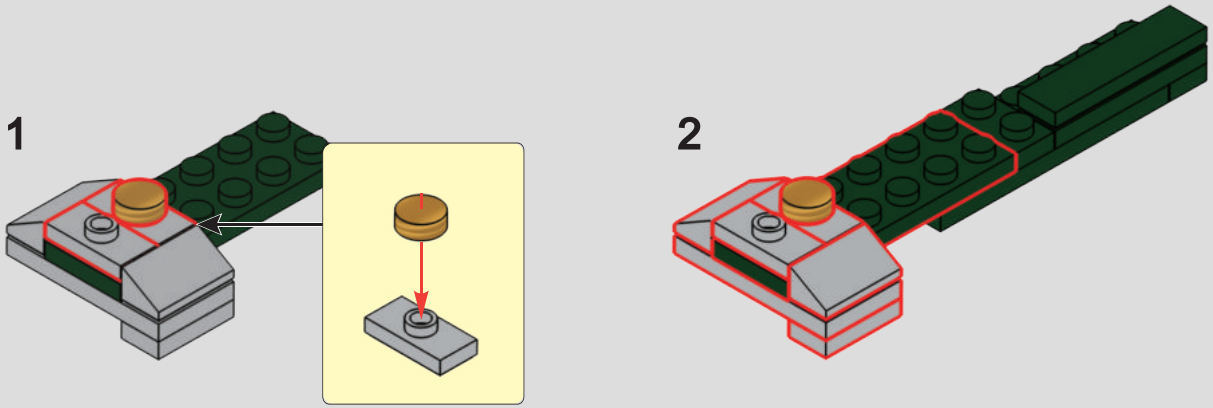

77

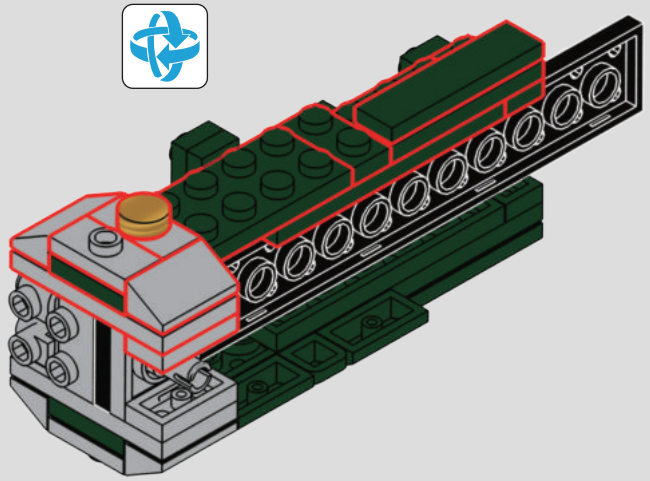

78

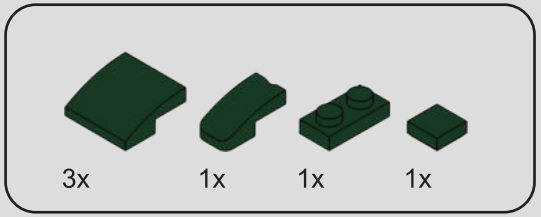

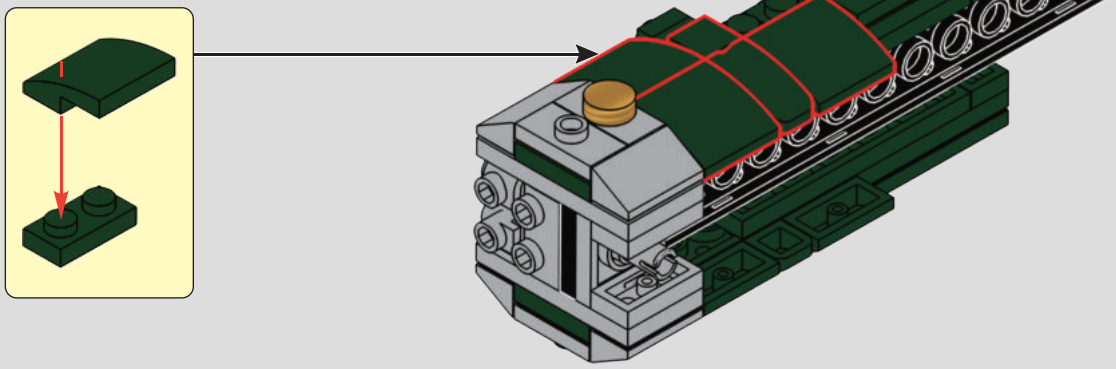

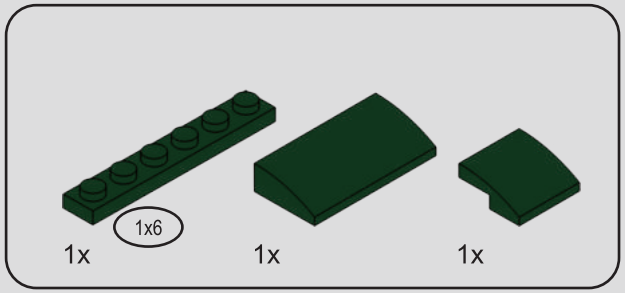

79

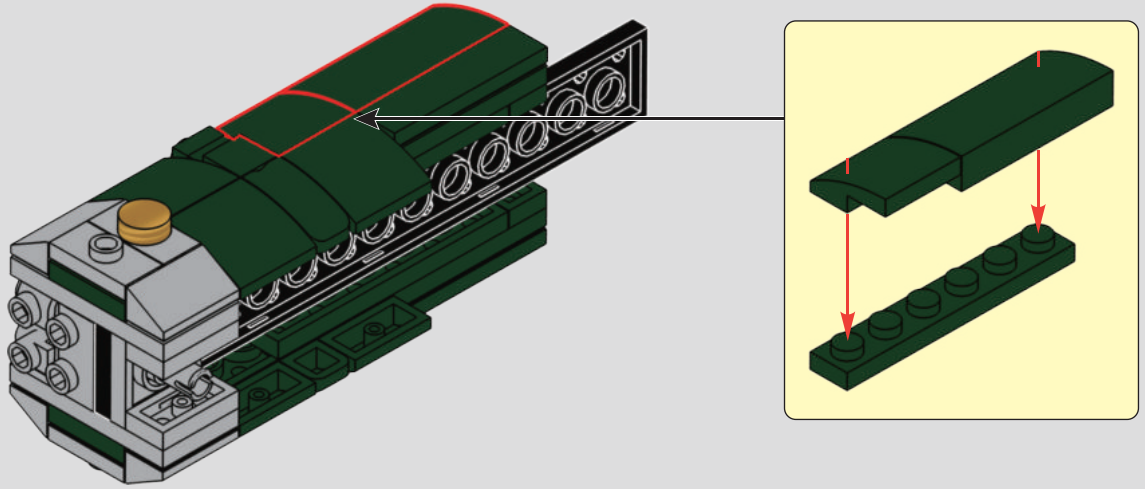

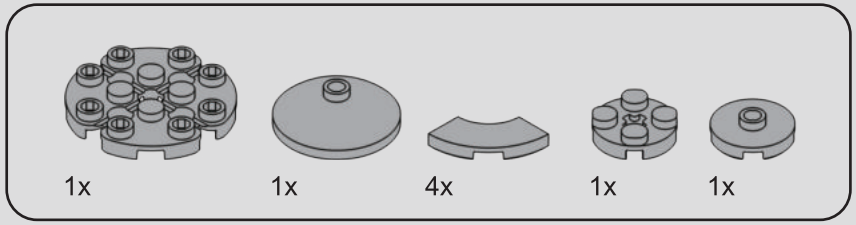

80

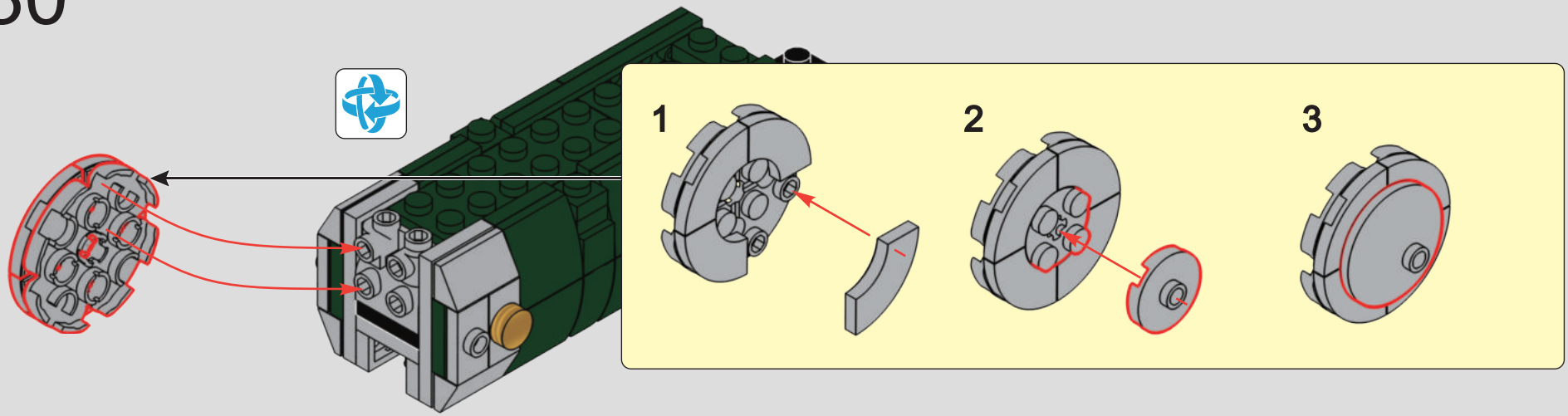

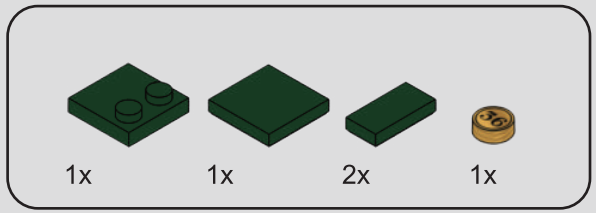

81

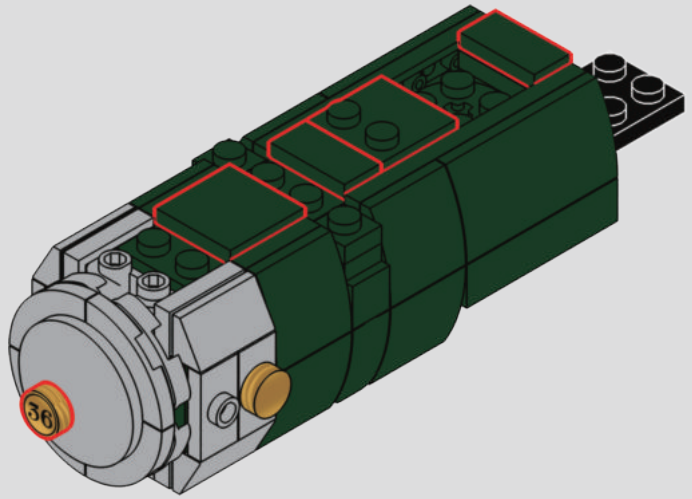

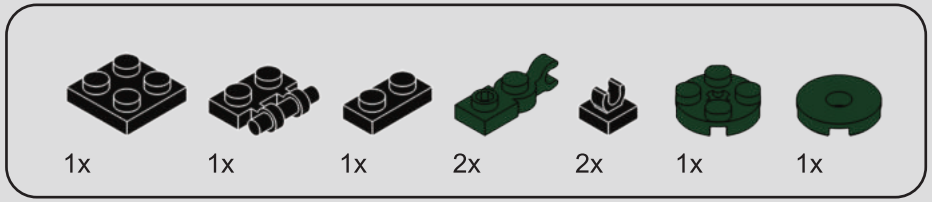

82

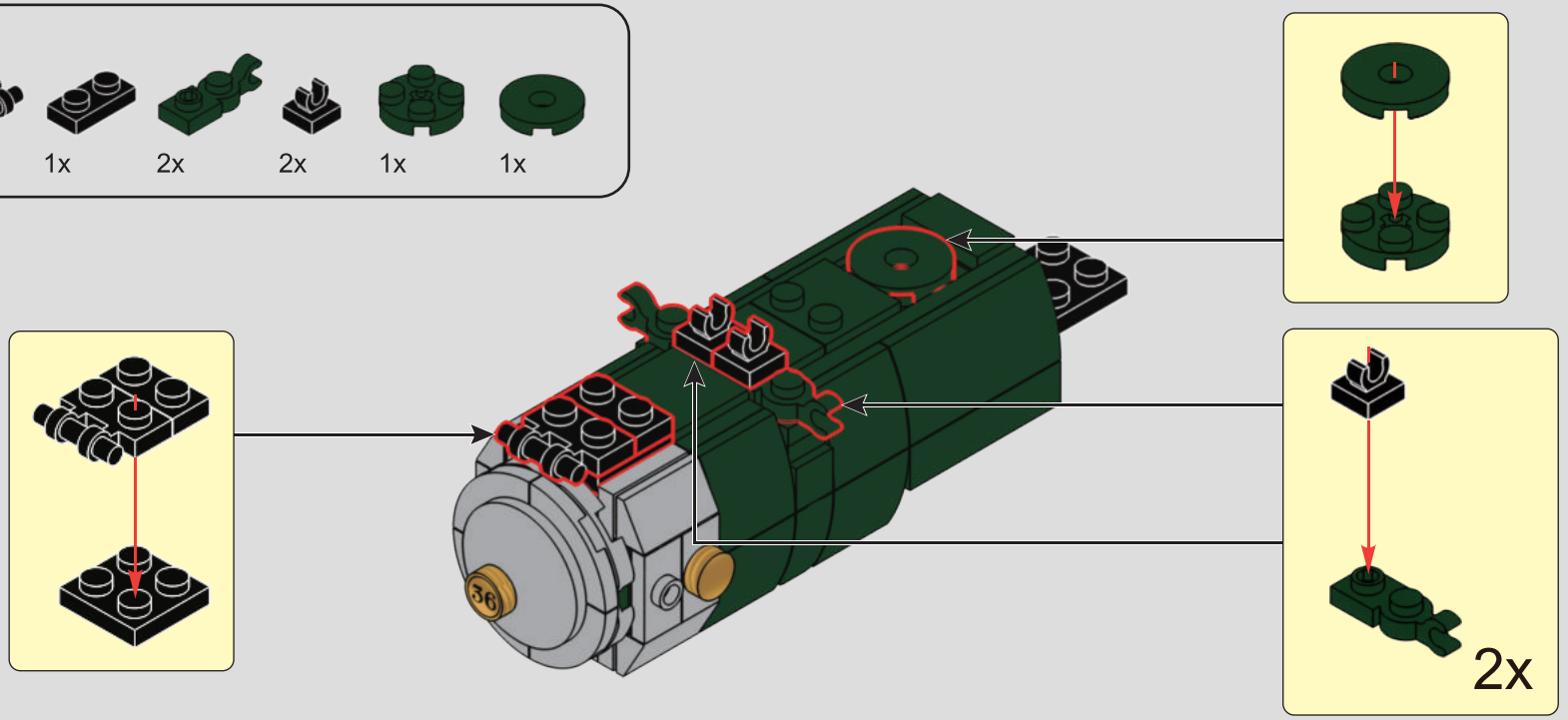

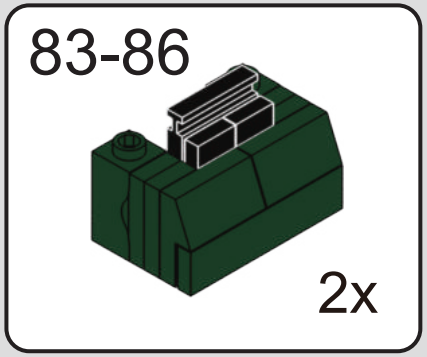

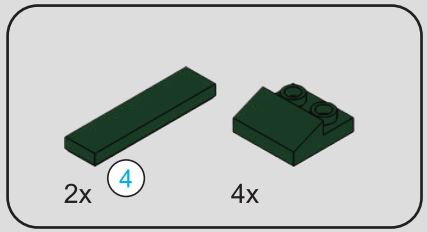

83

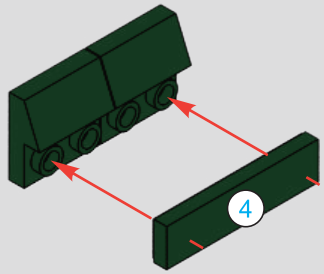

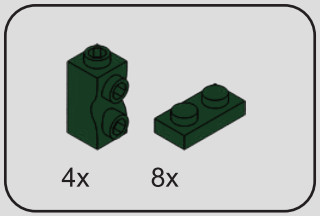

84

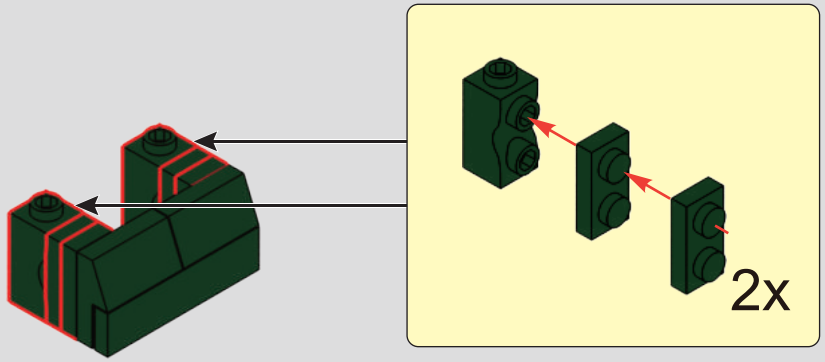

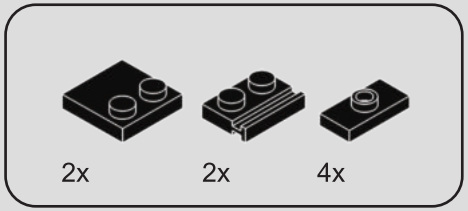

85

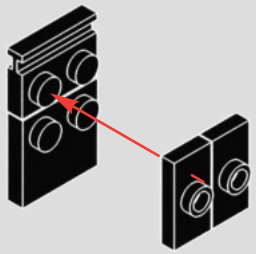

86

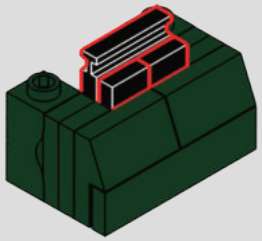

2x

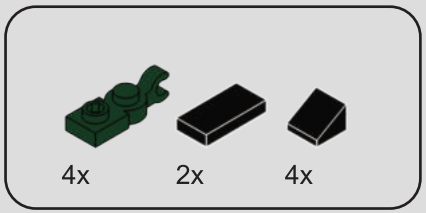

87

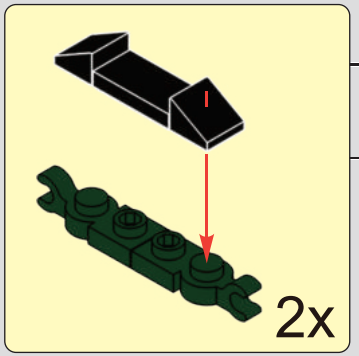

1

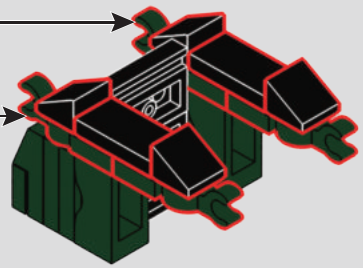

2

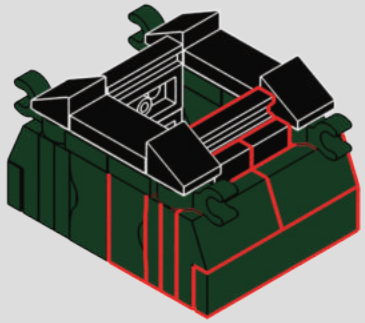

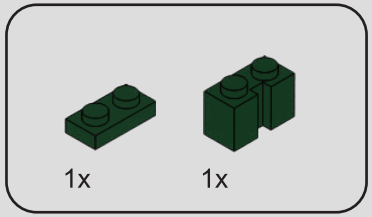

88

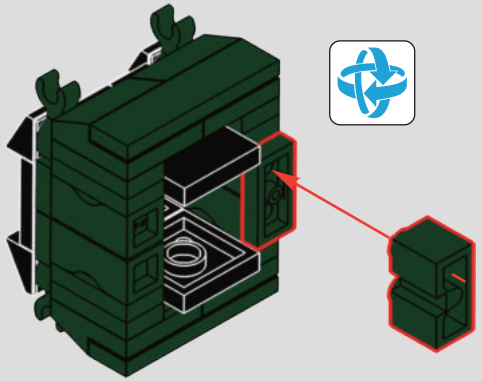

89

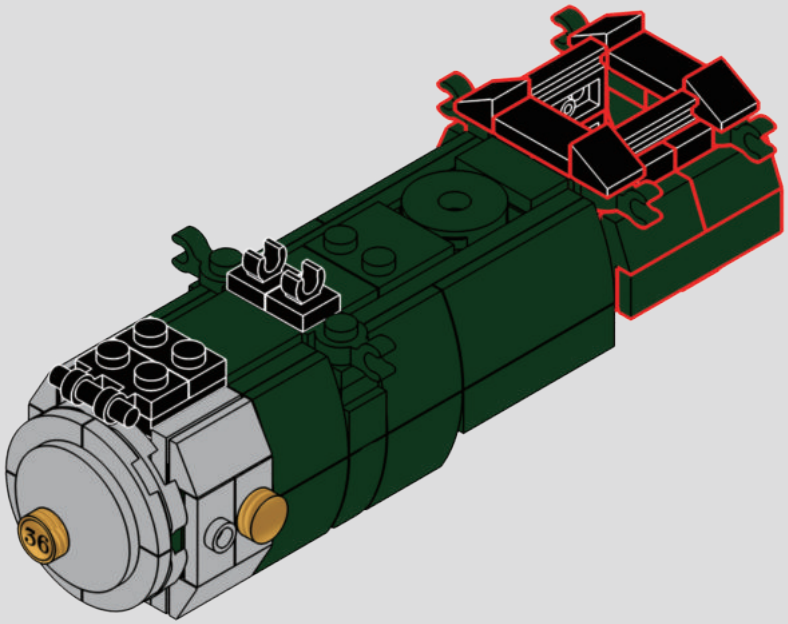

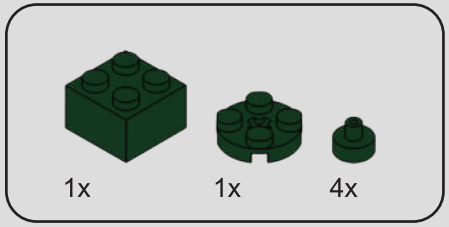

90

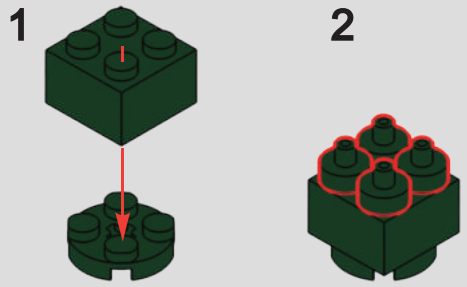

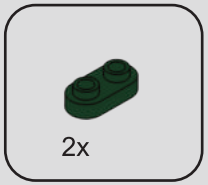

91

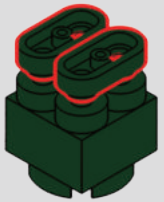

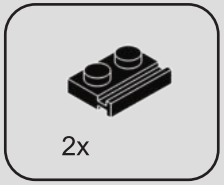

92

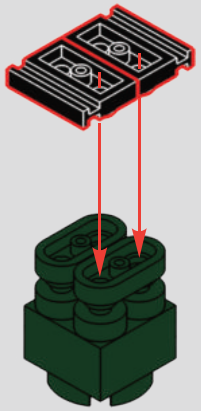

93

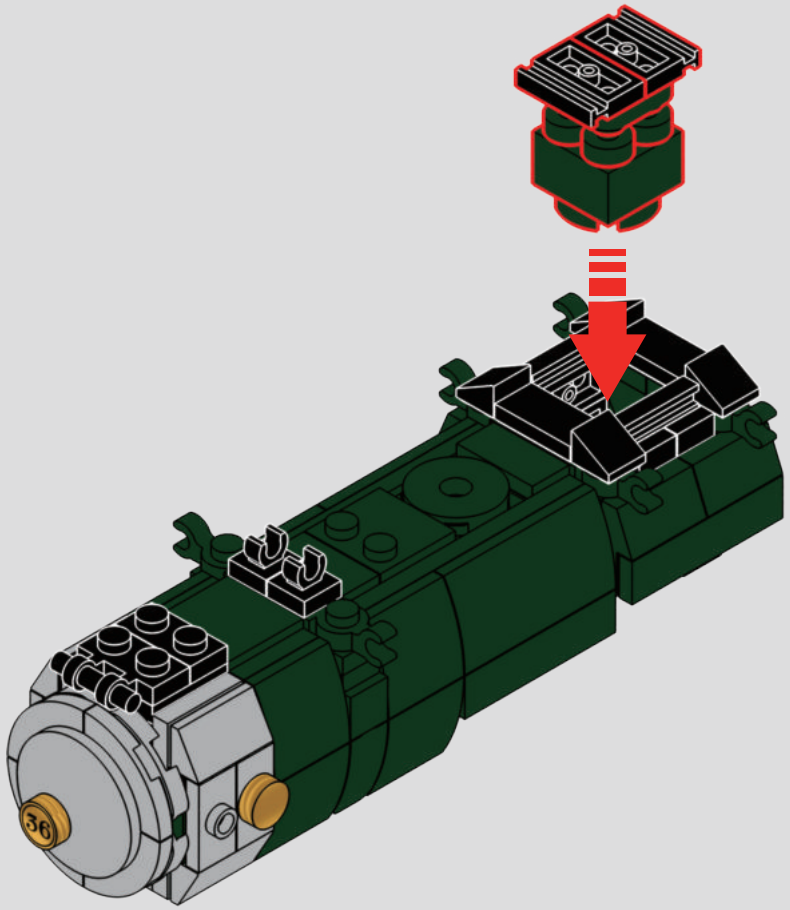

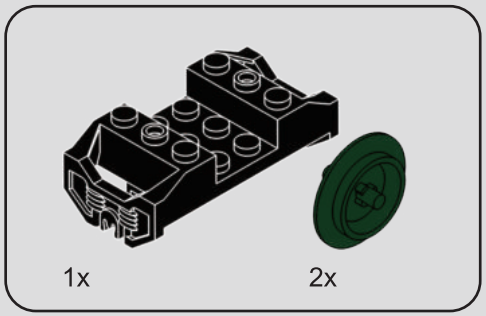

94

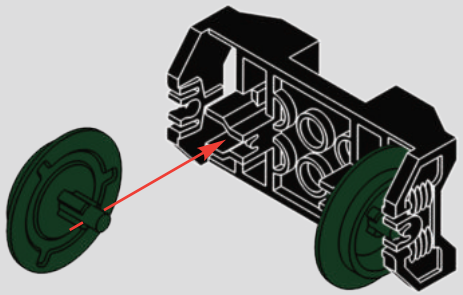

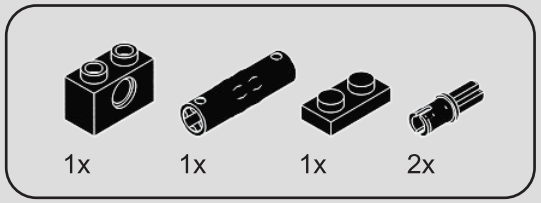

95

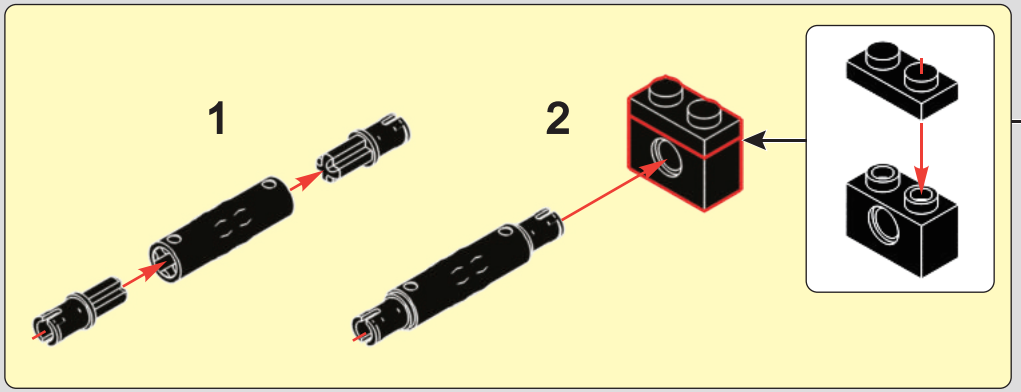

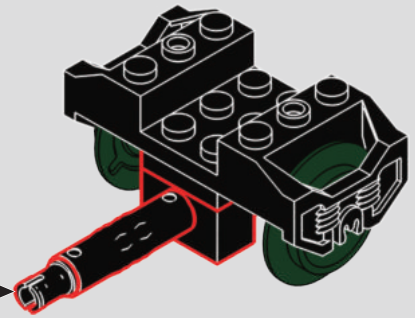

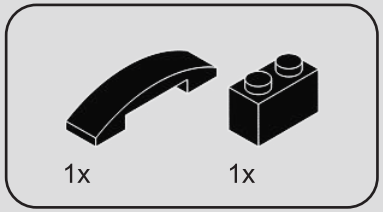

96

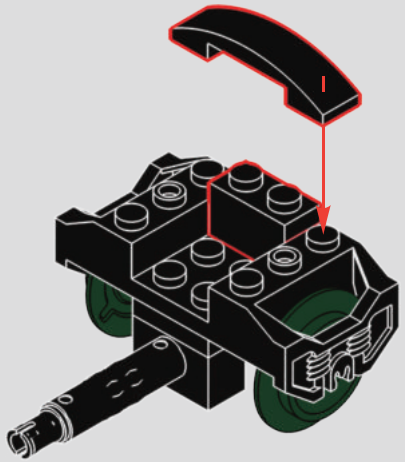

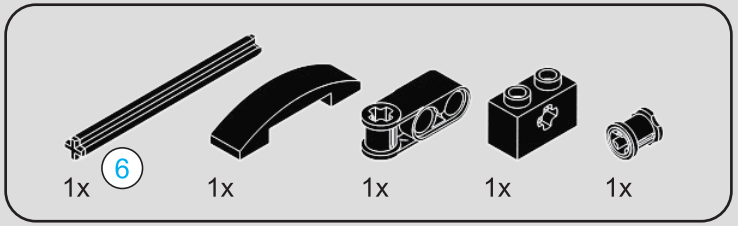

97

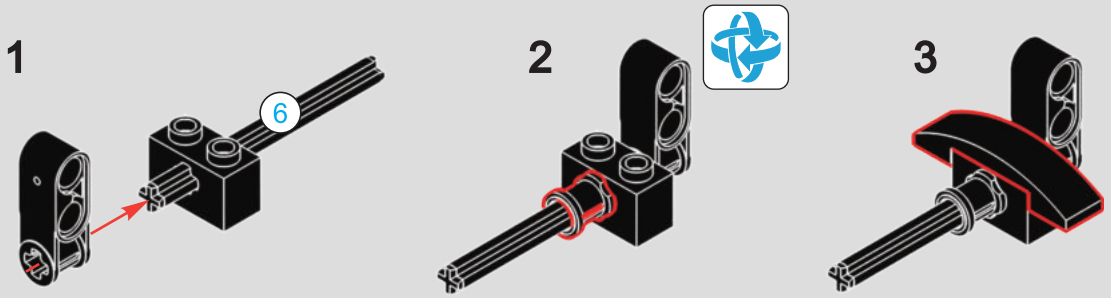

98

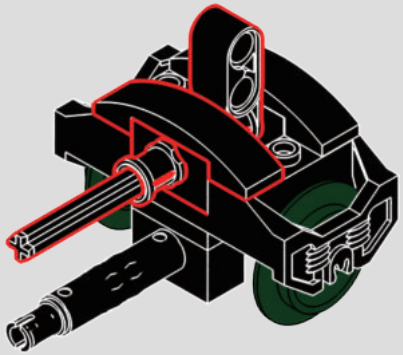

99-102

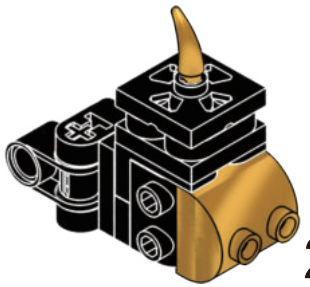

2x

99

1

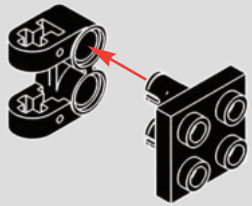

2

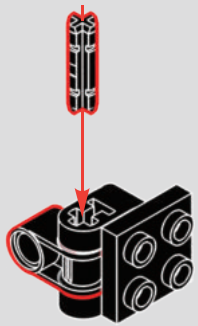

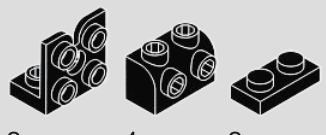

100

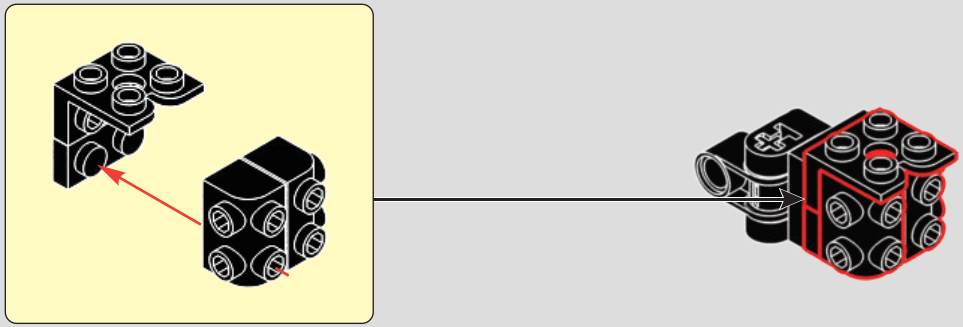

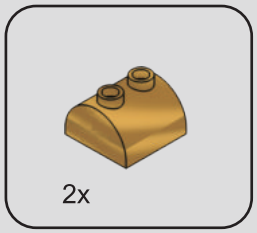

101

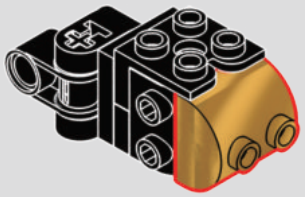

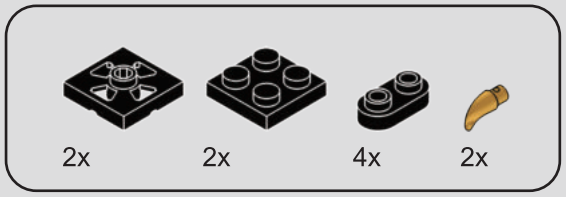

102

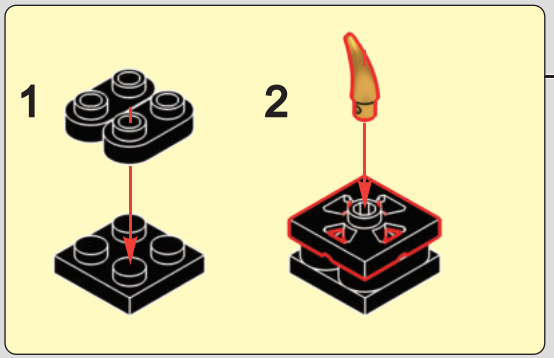

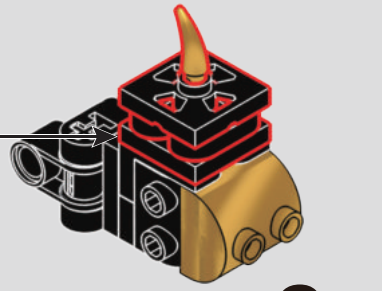

2x

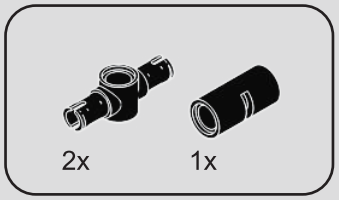

103

104

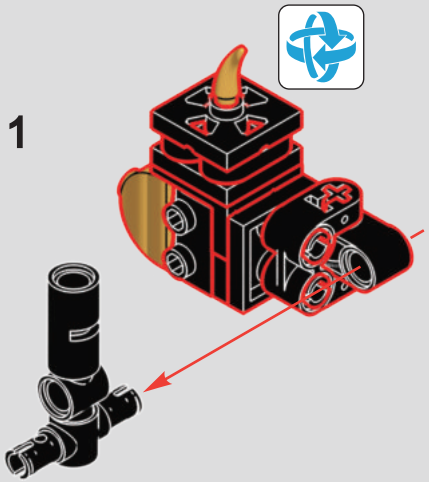

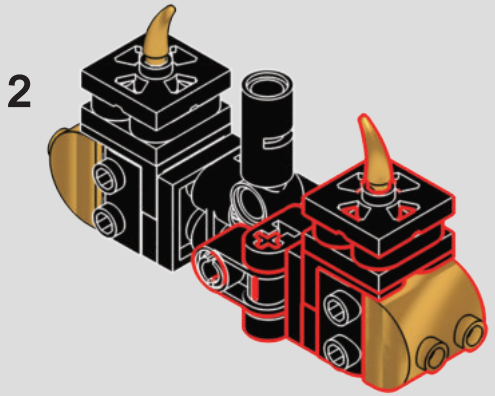

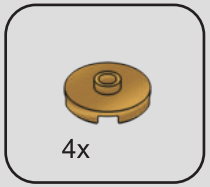

105

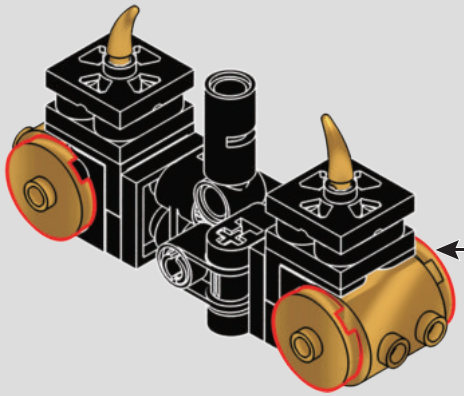

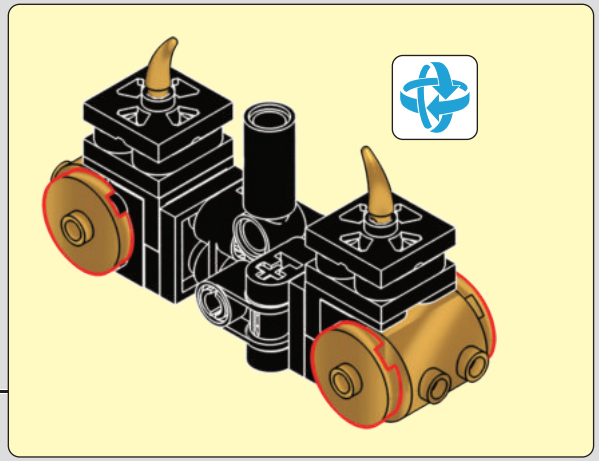

106

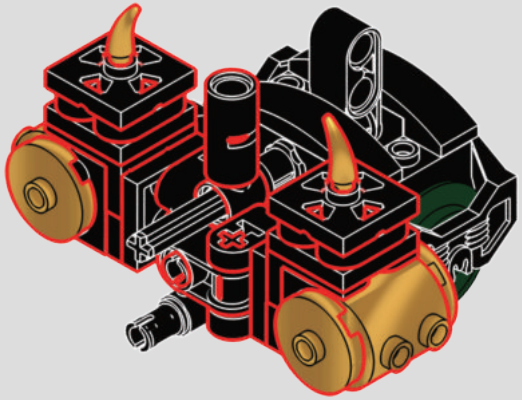

107

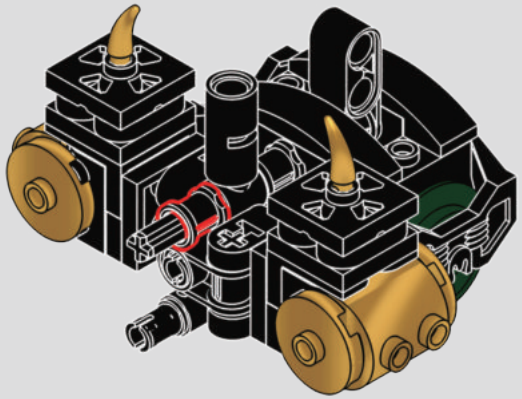

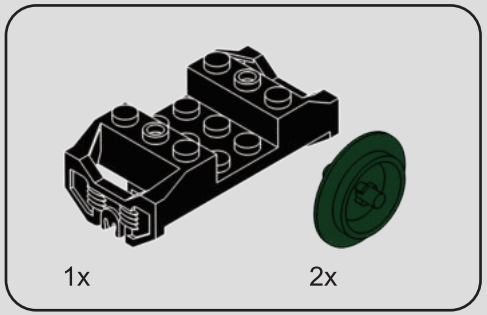

108

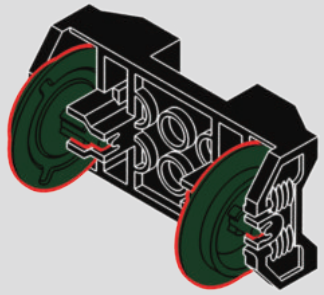

2x

109

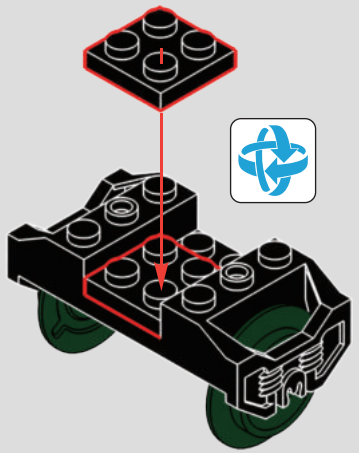

1x 1x8 1x 2x

110

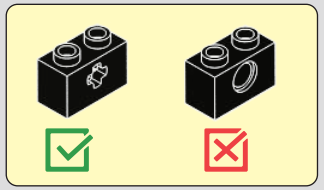

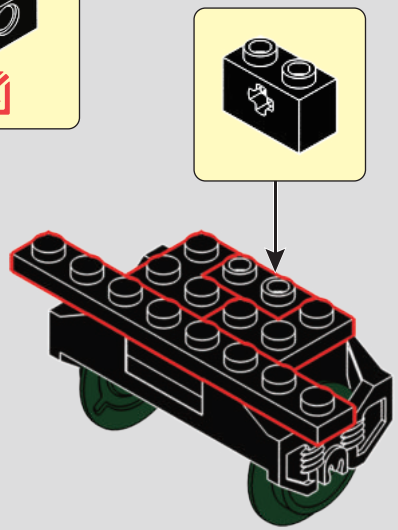

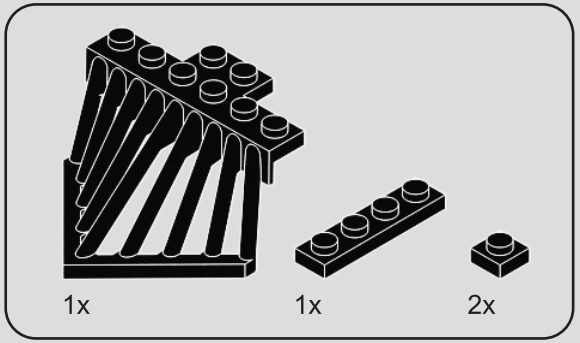

111

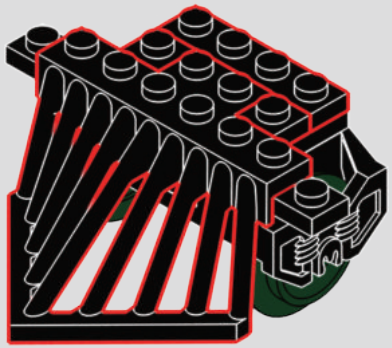

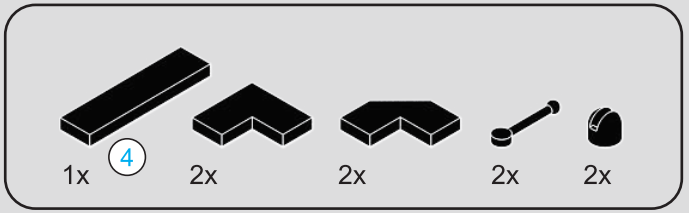

112

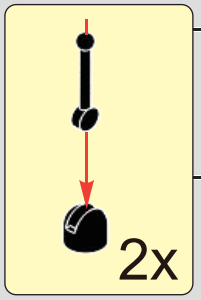

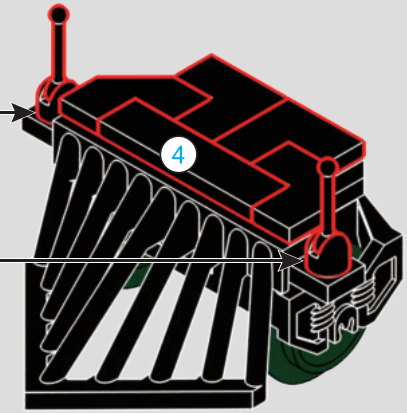

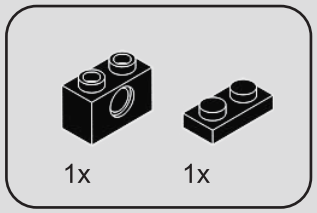

113

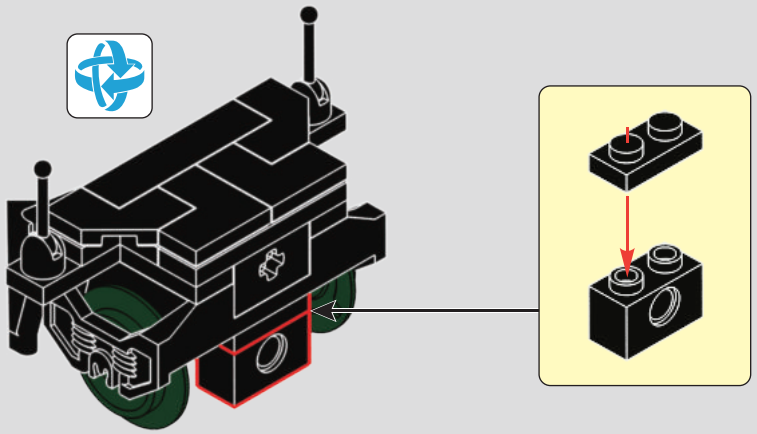

114

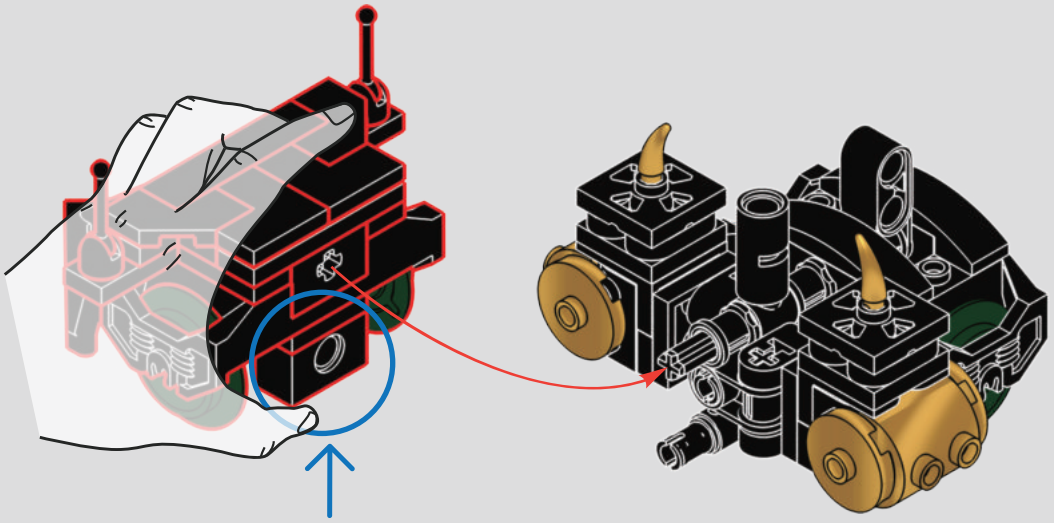

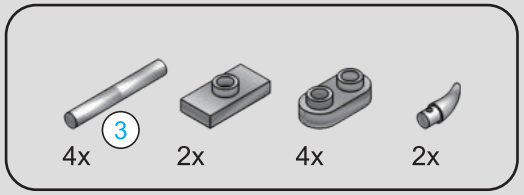

115

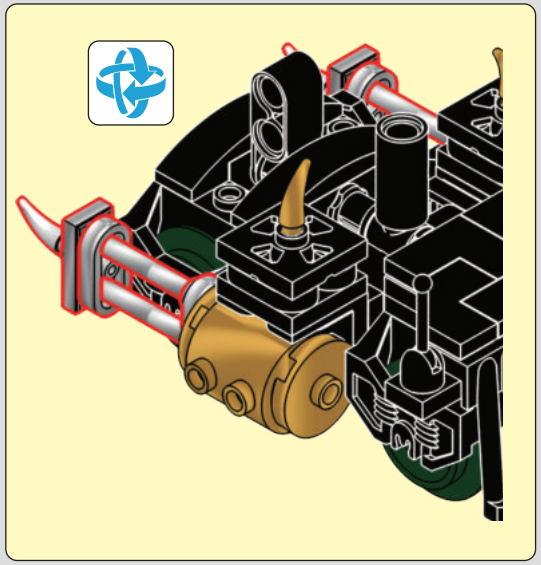

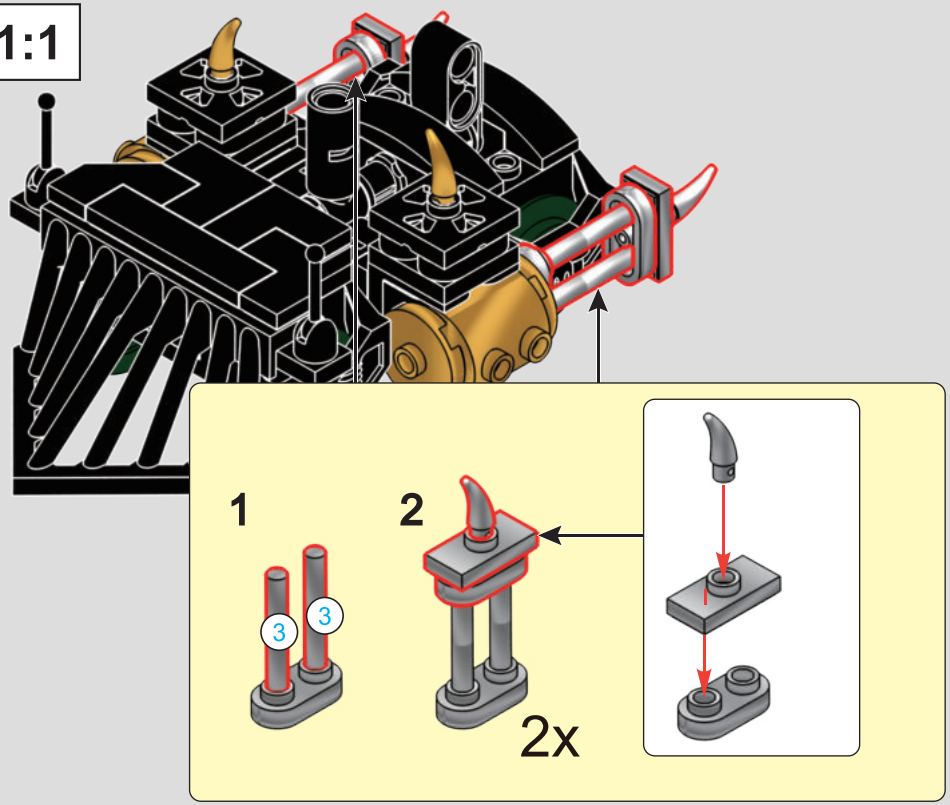

116

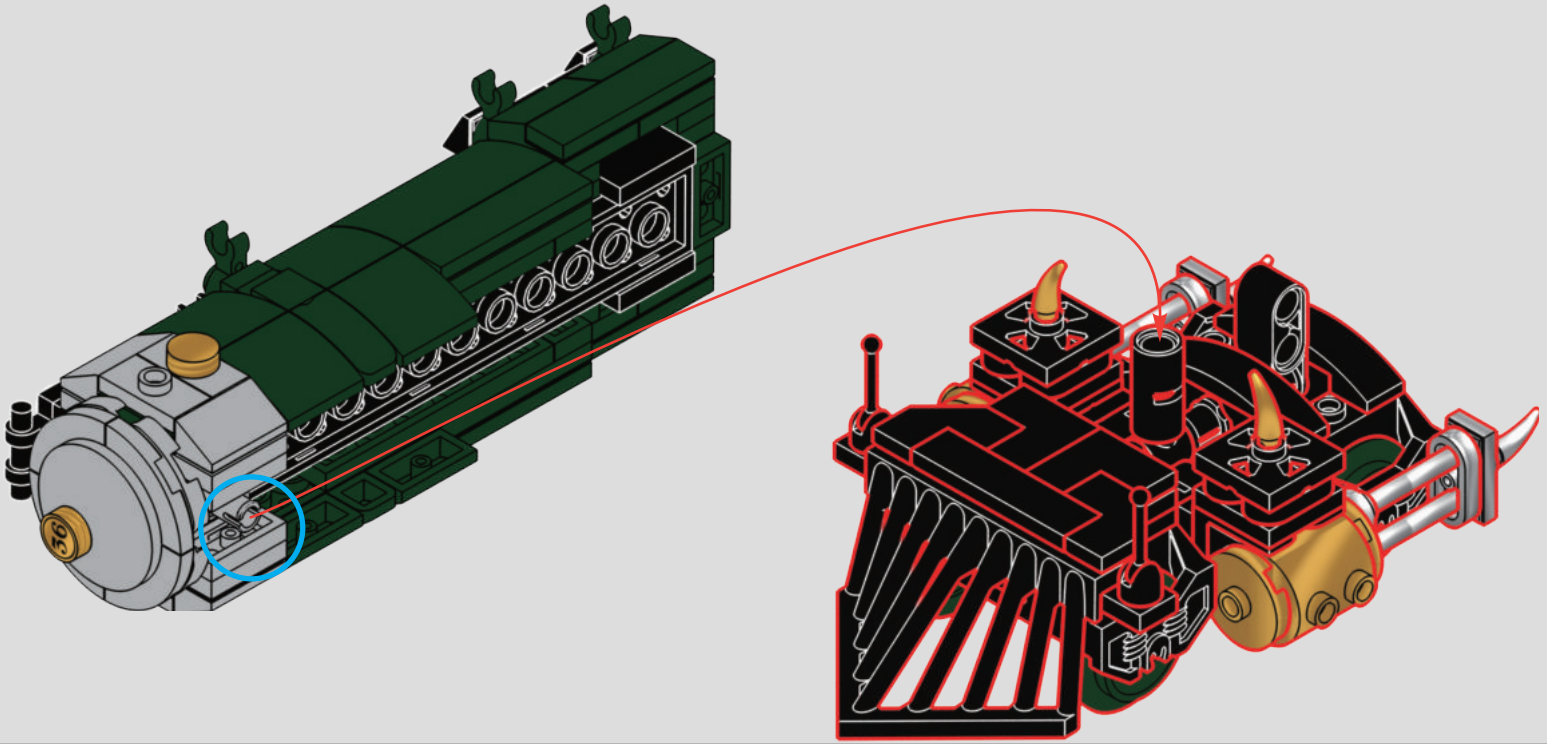

117

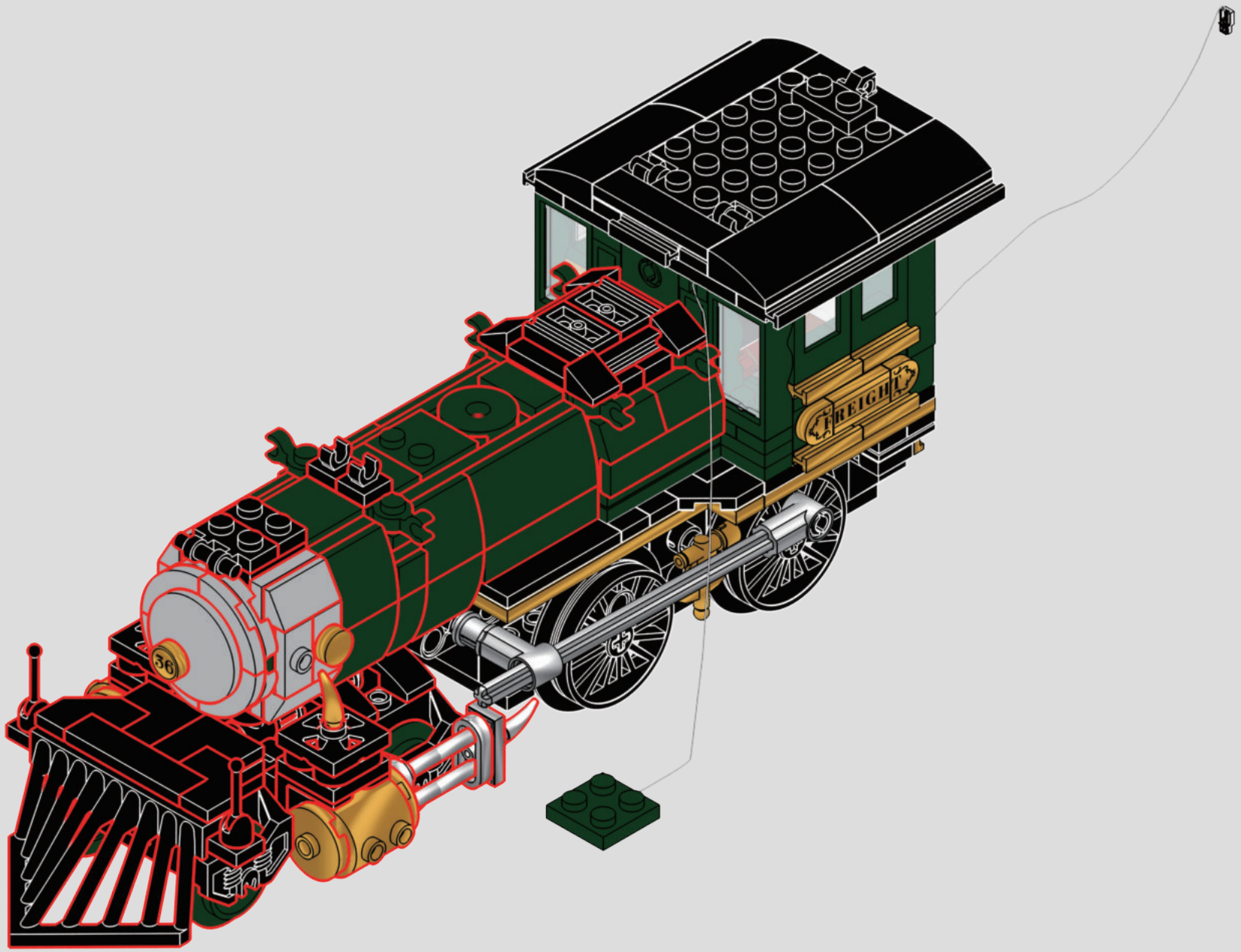

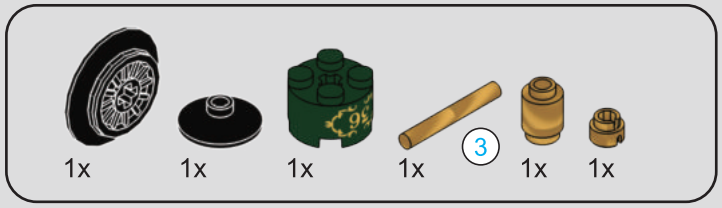

118

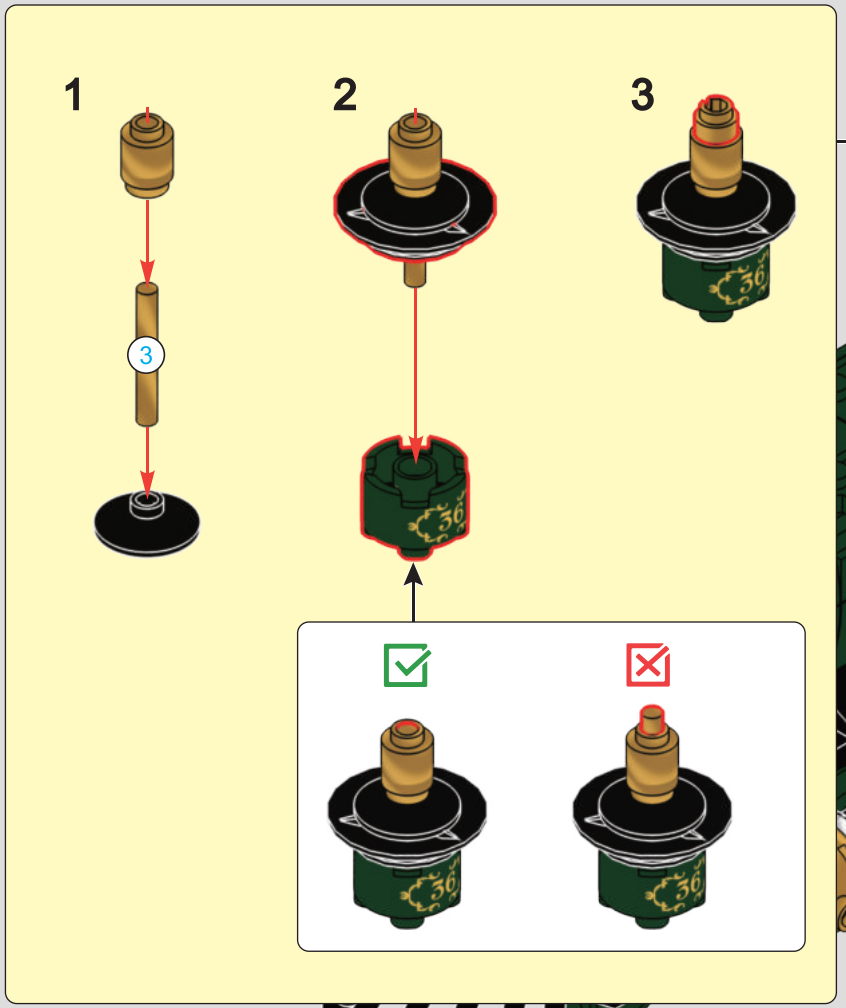

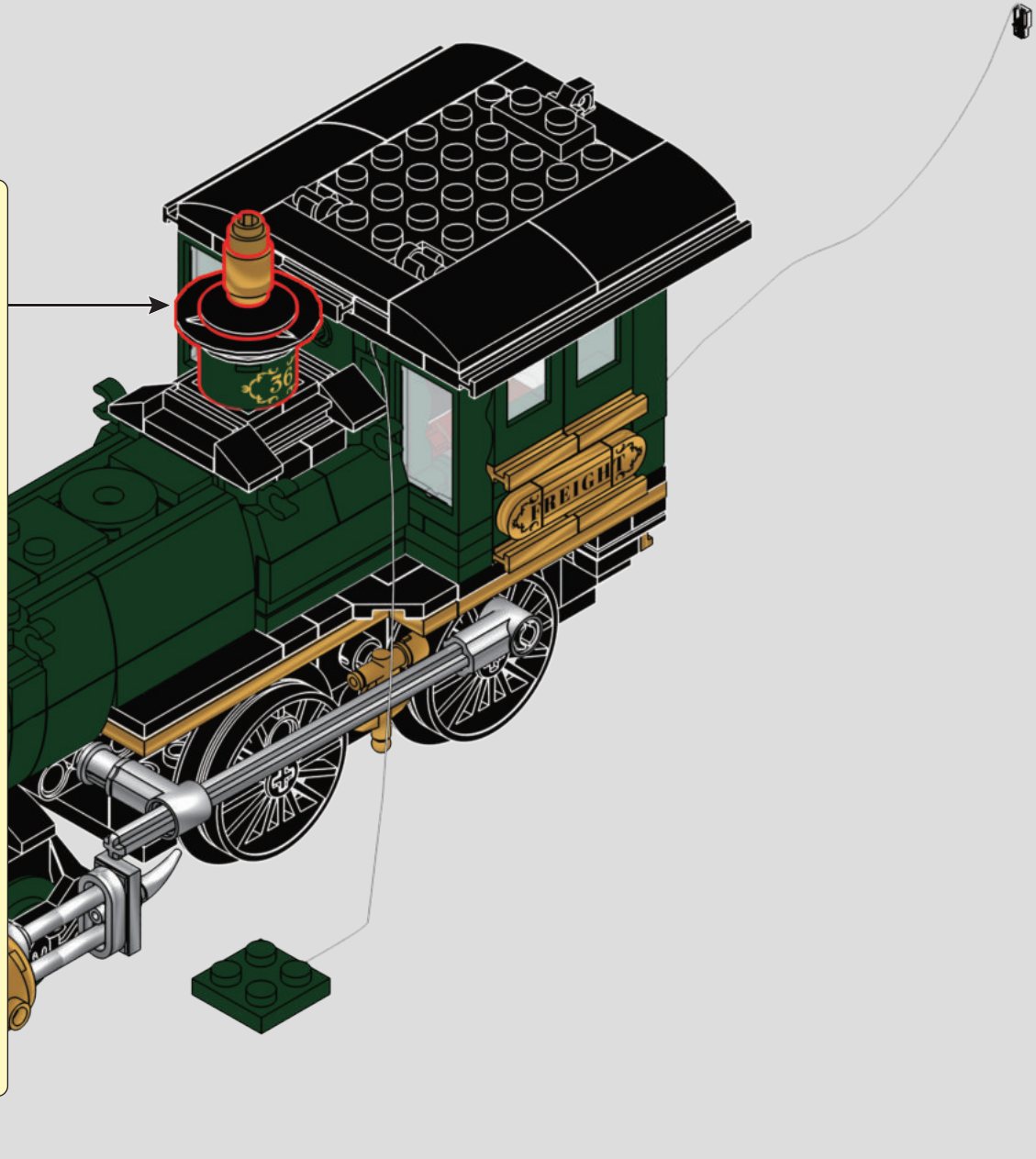

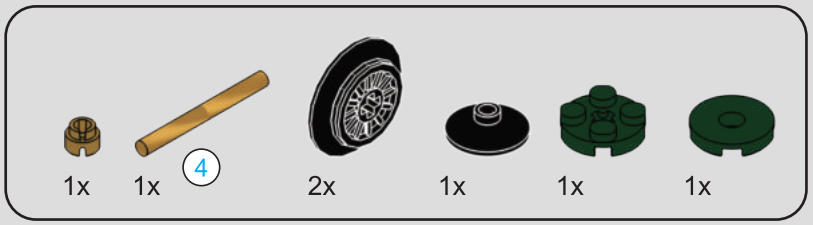

119

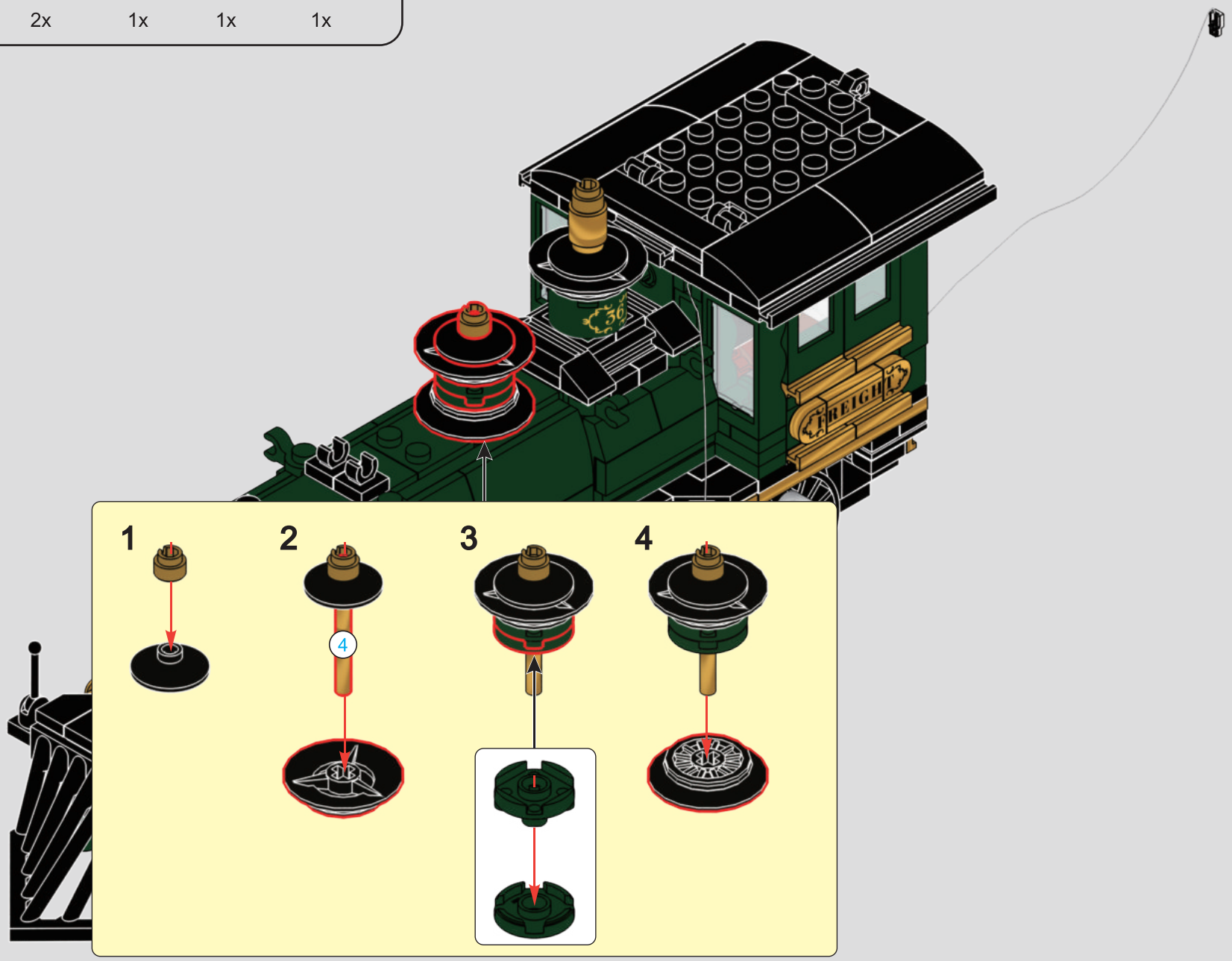

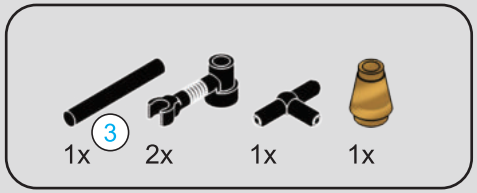

120

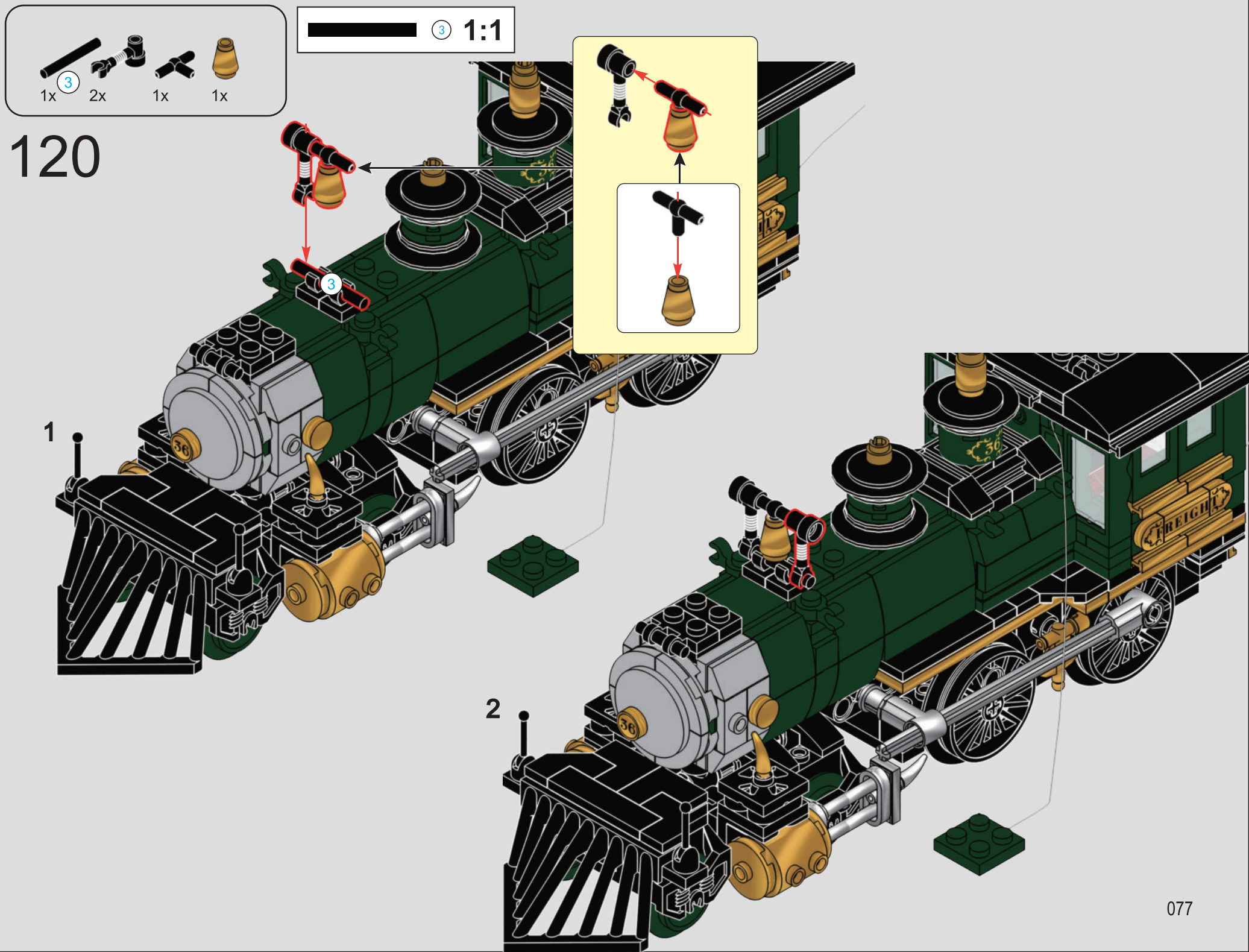

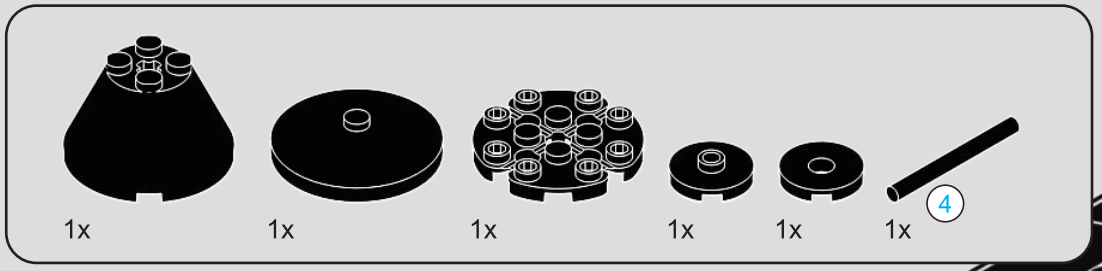

121

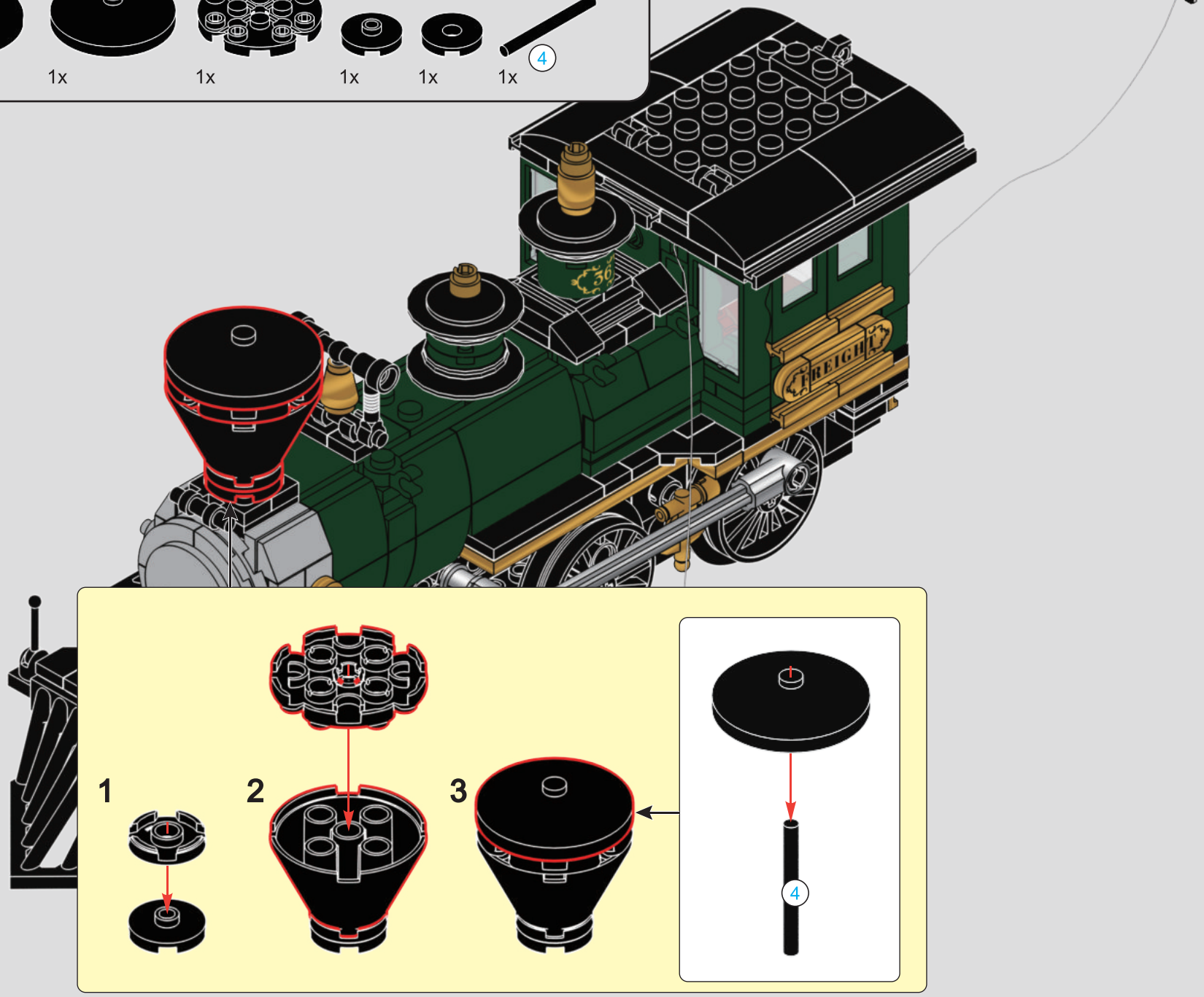

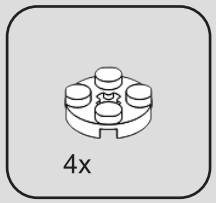

122

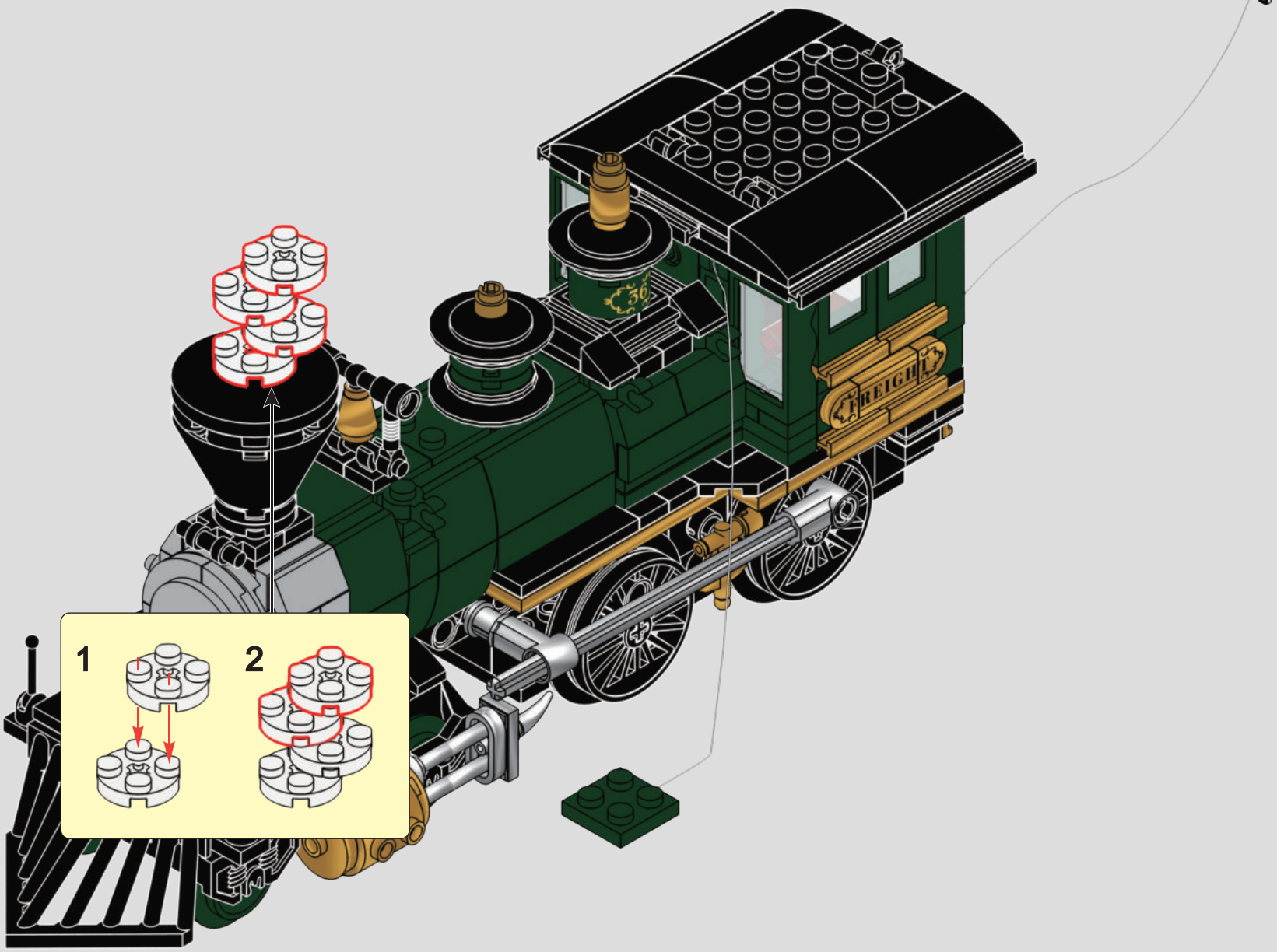

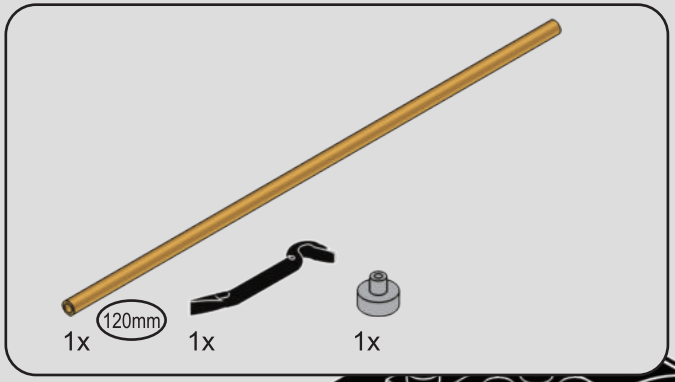

123

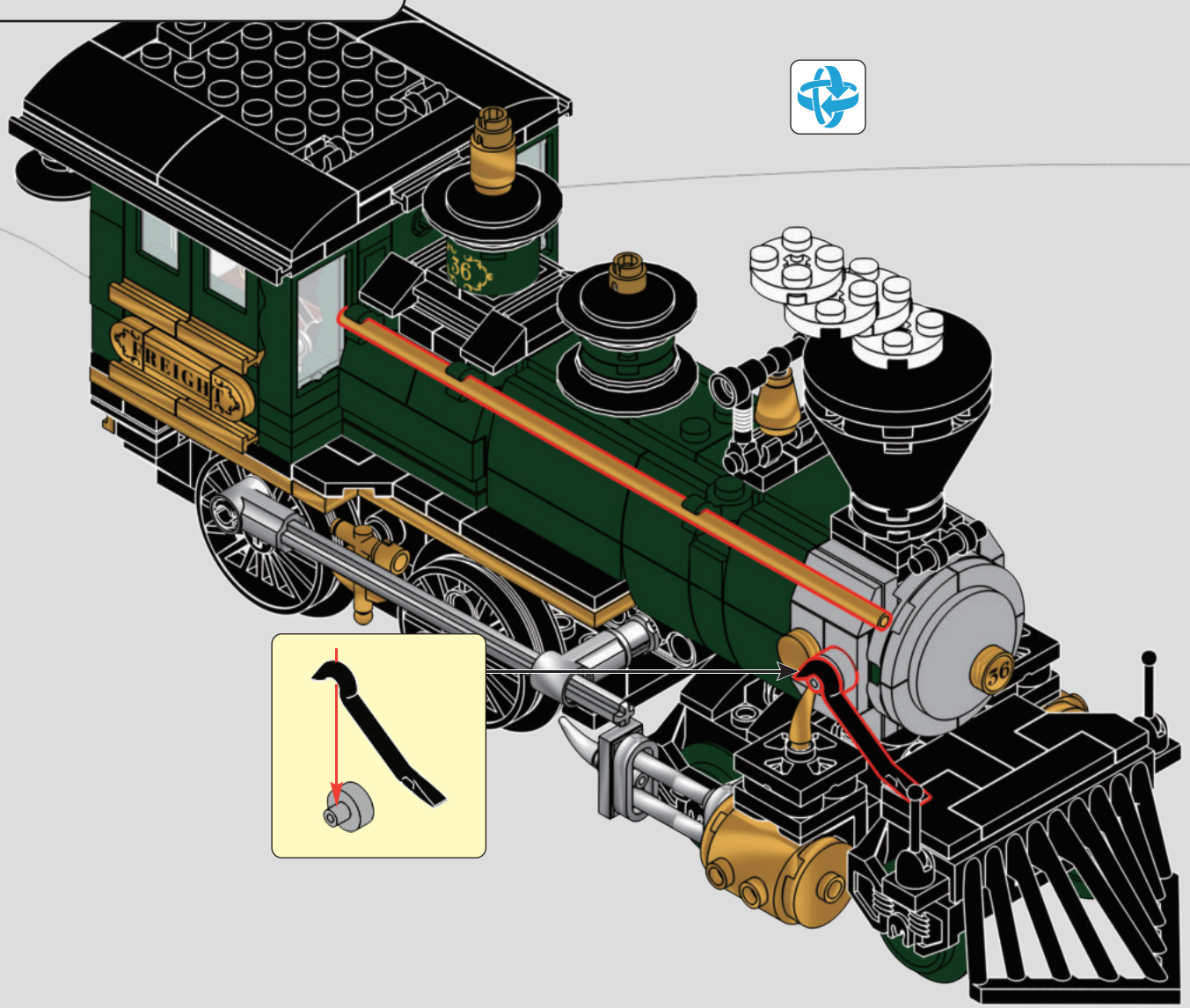

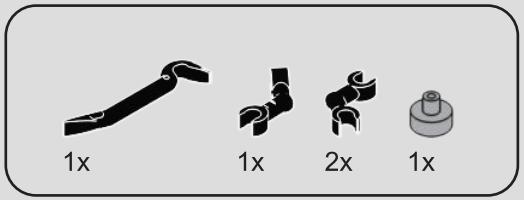

124

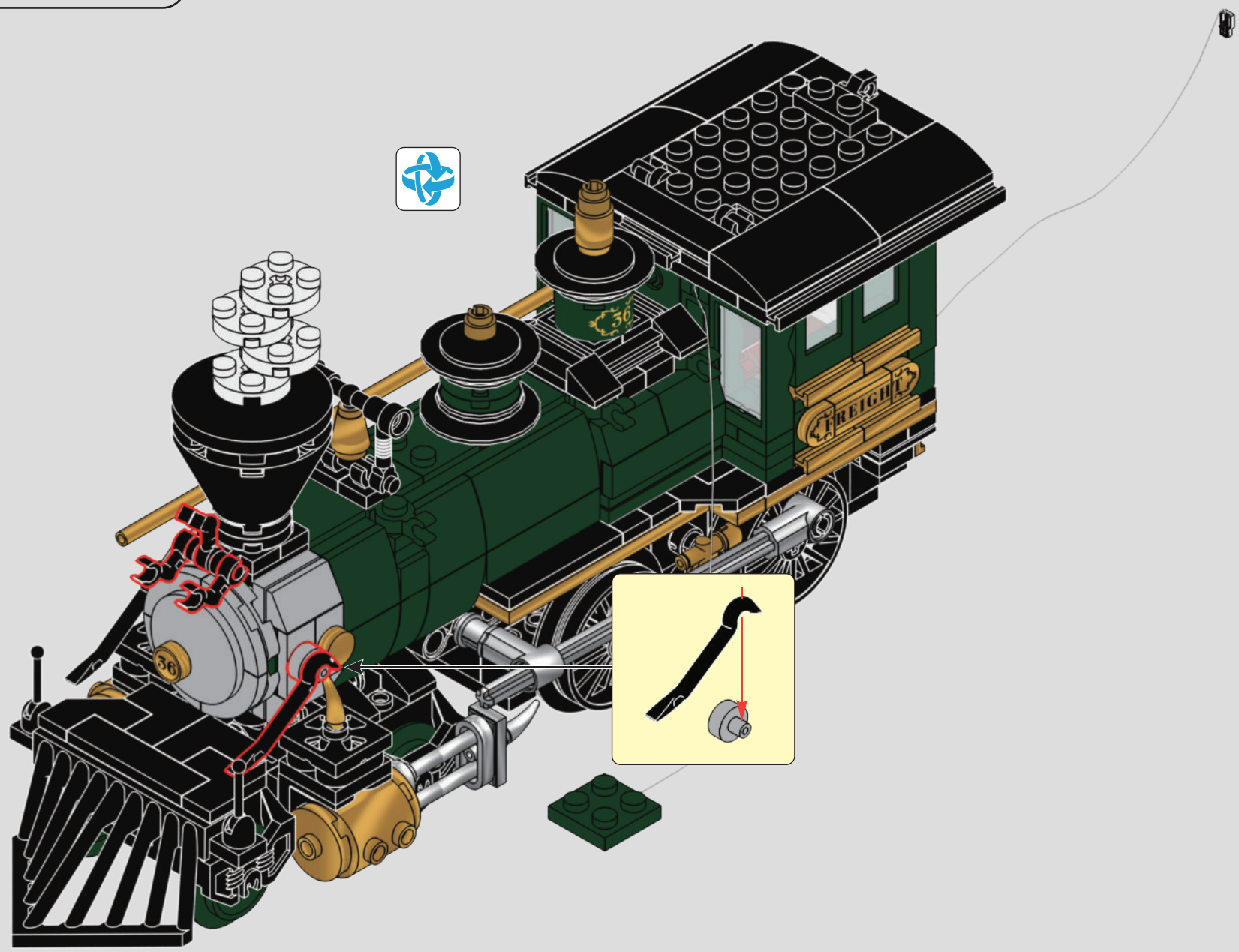

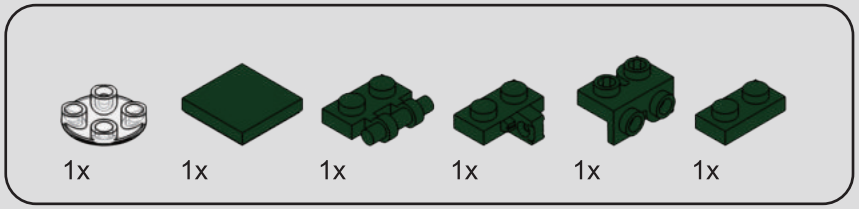

125

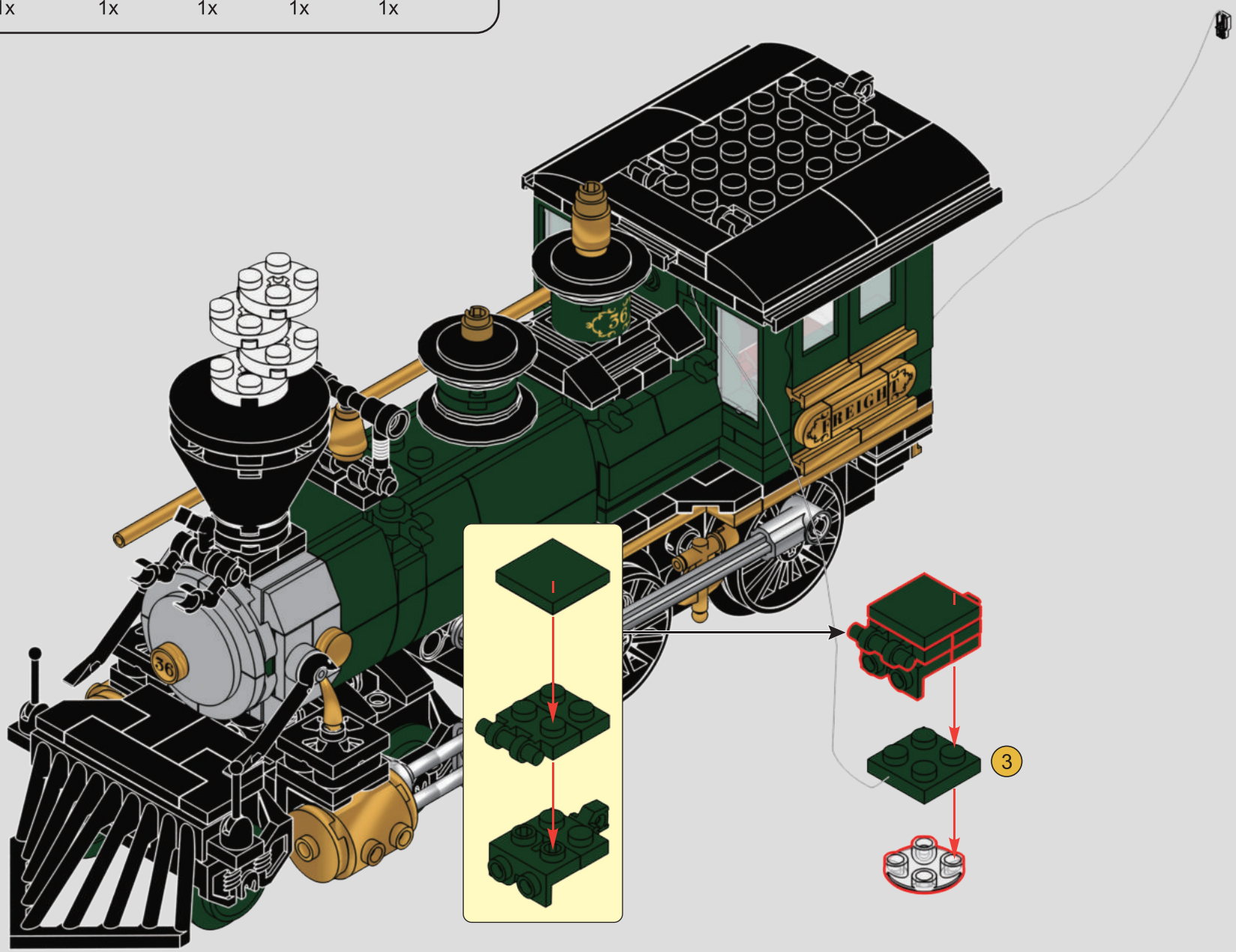

1x

126

1

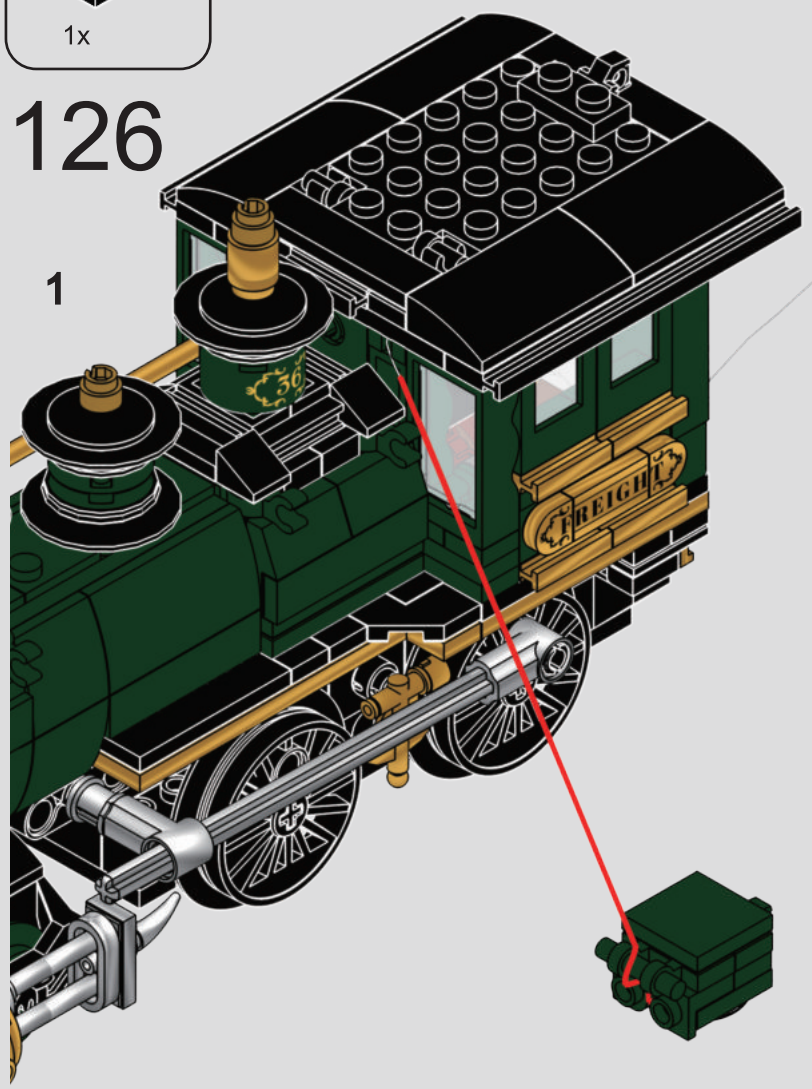

2

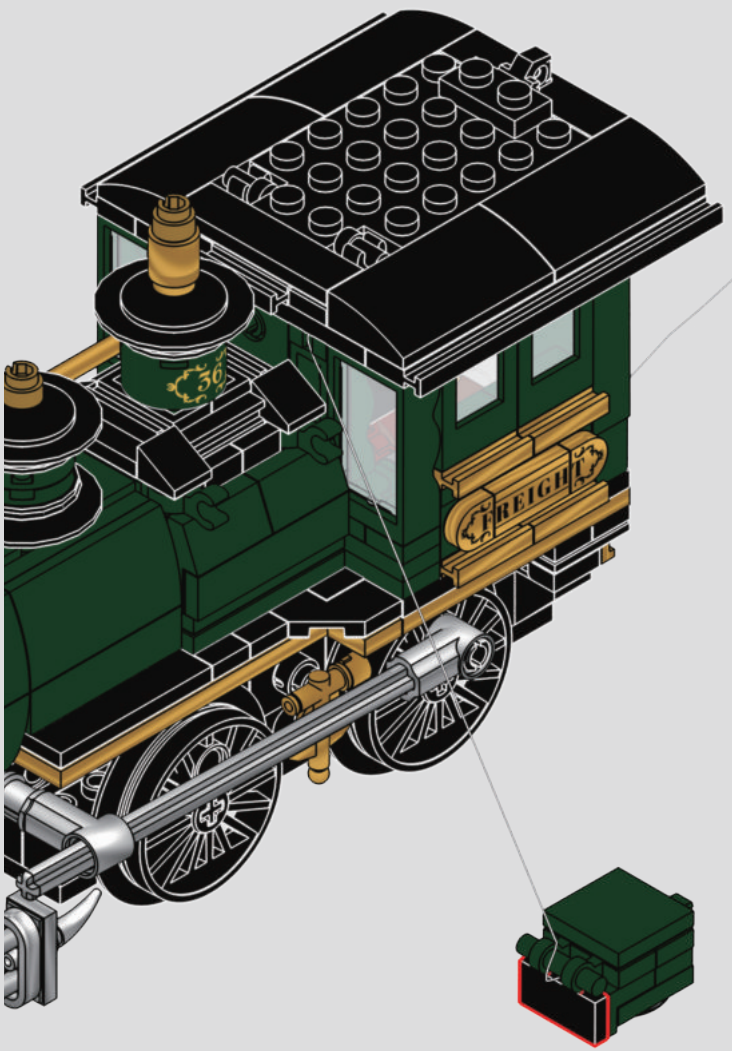

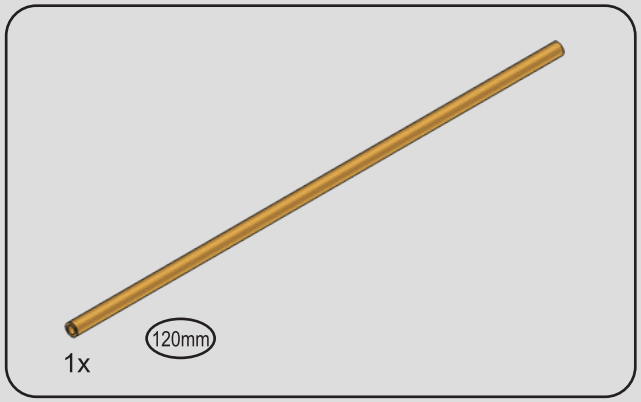

127

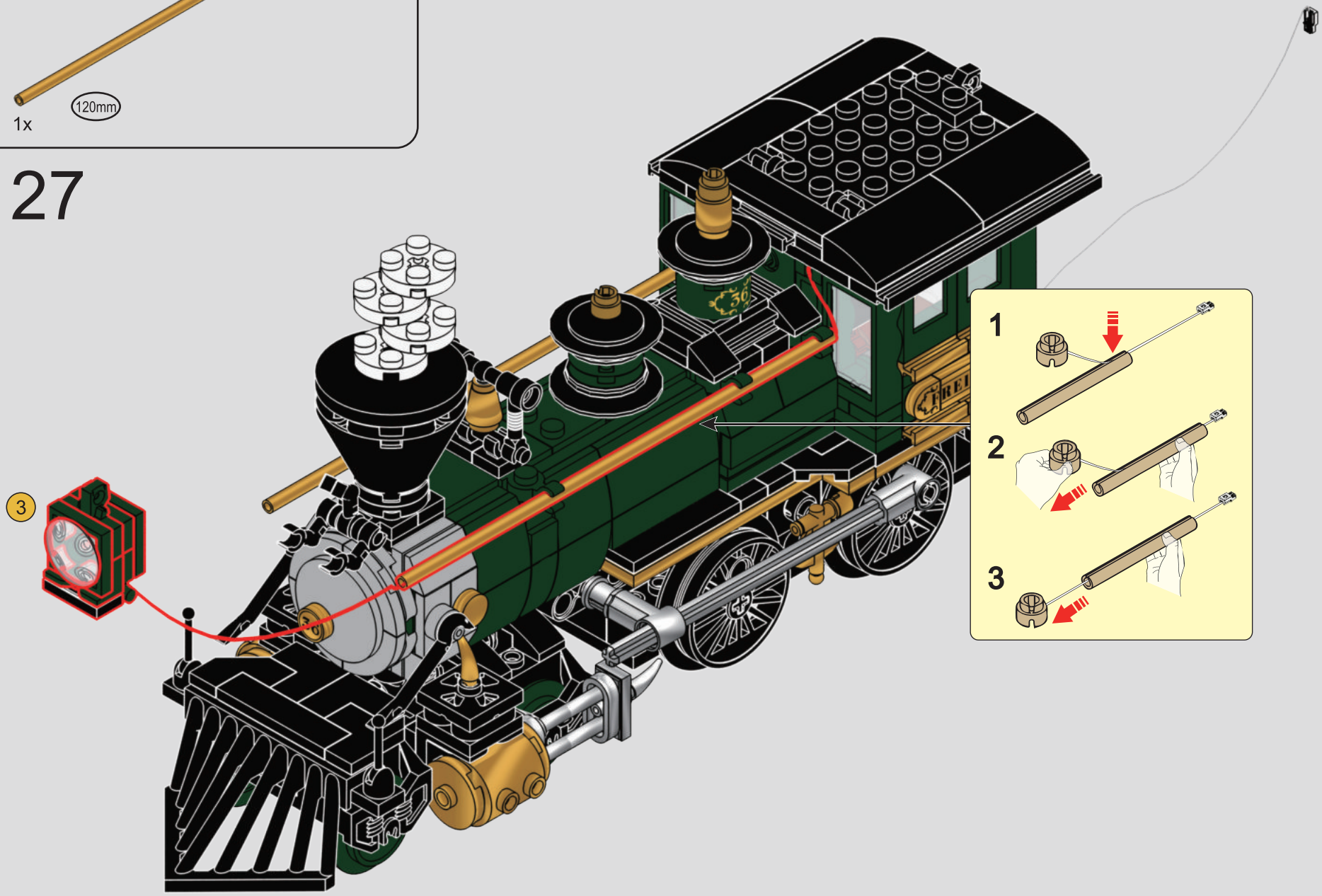

128

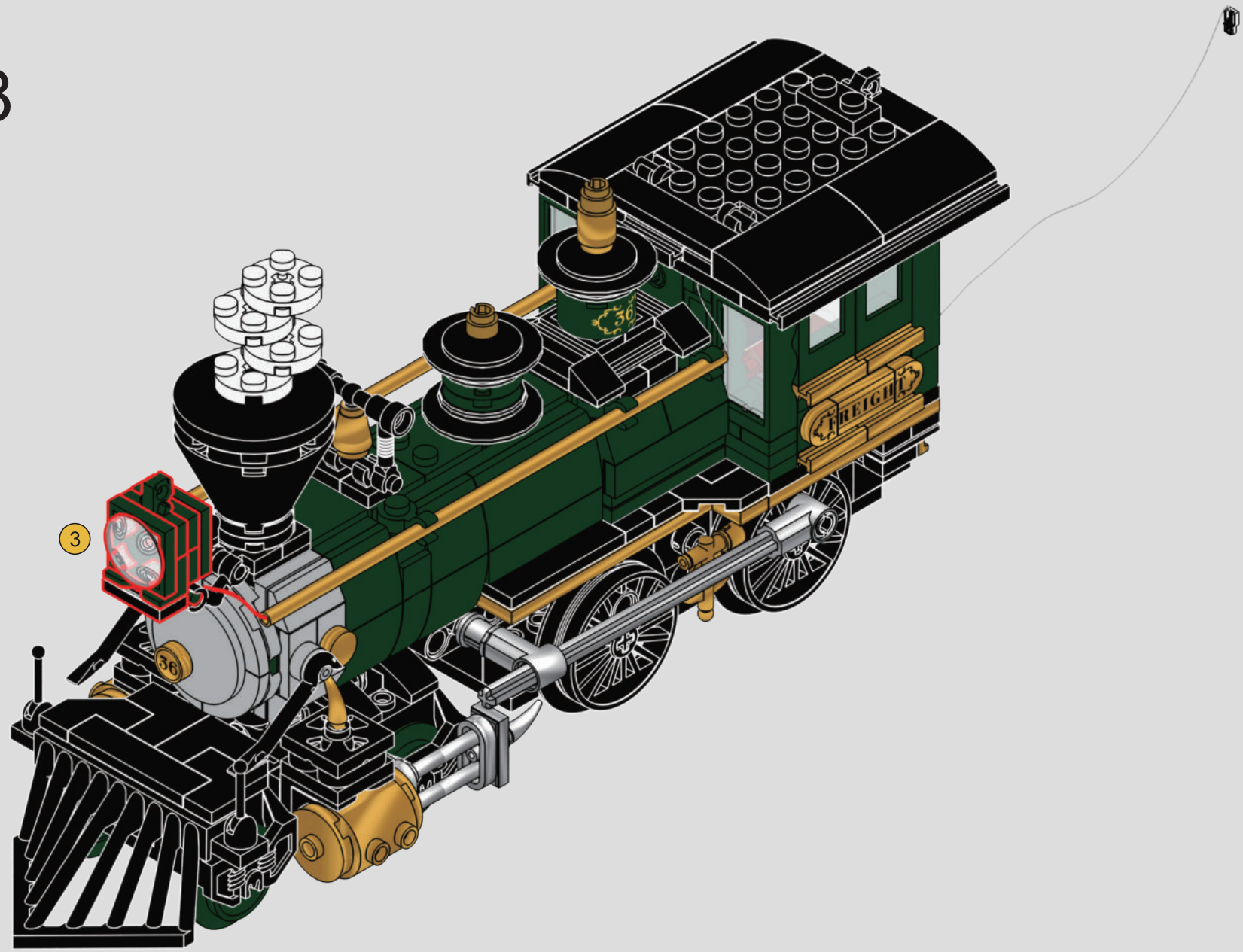

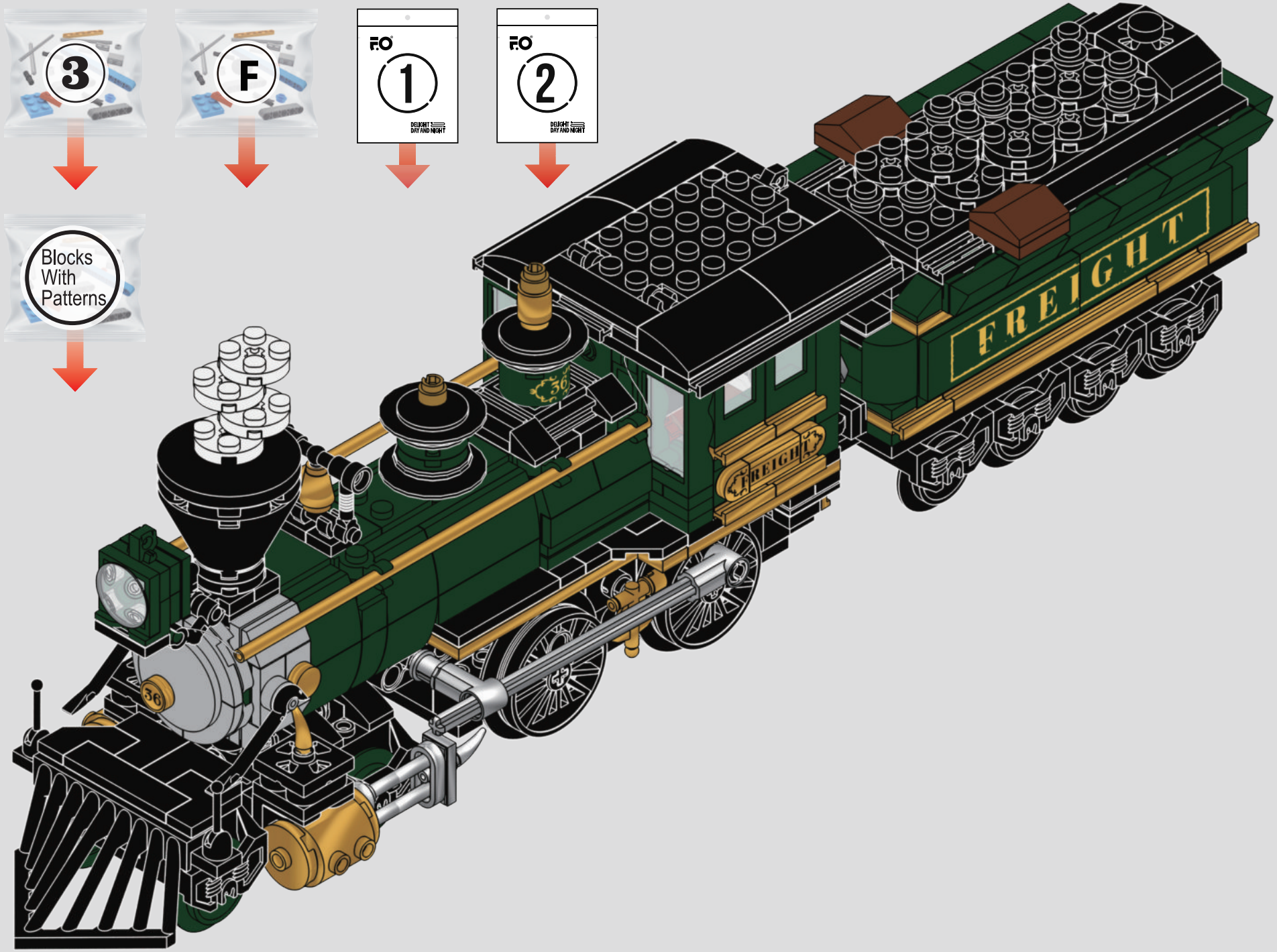
3
F
1
2
Blocks With Patterns
FREIGHT
FREIGHT

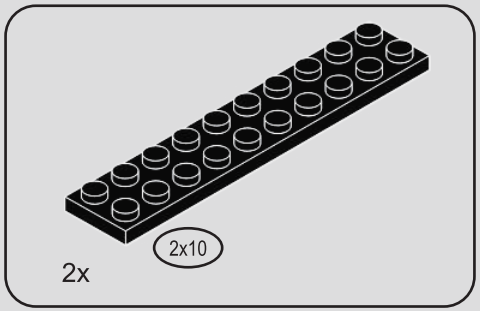

129

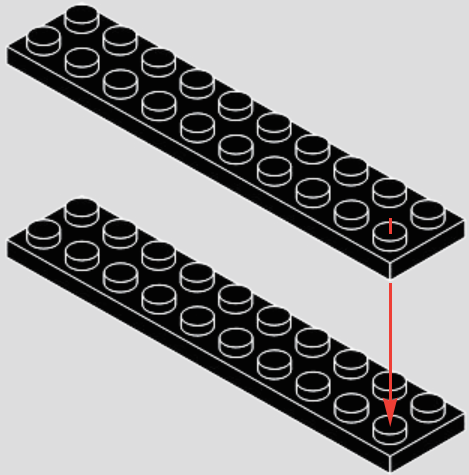

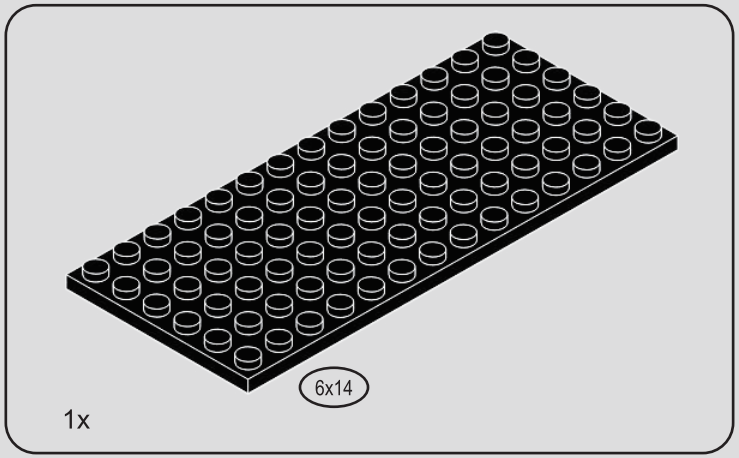

130

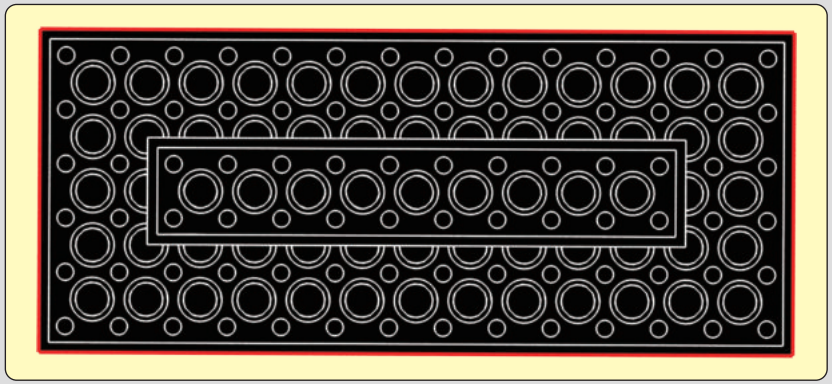

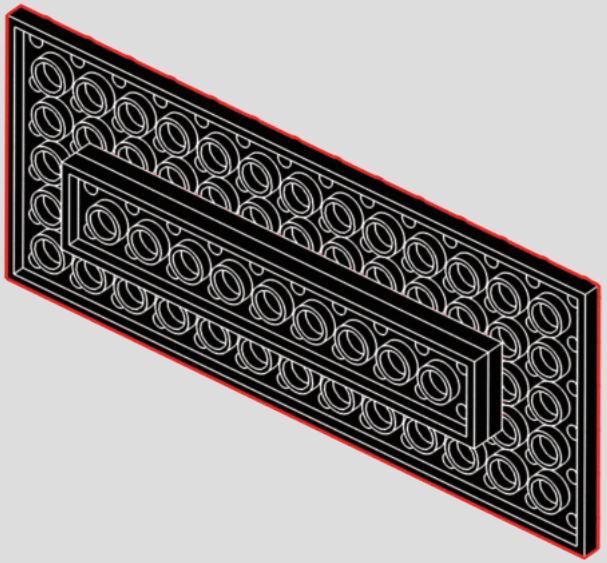

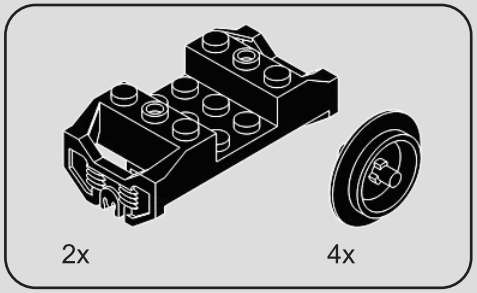

131

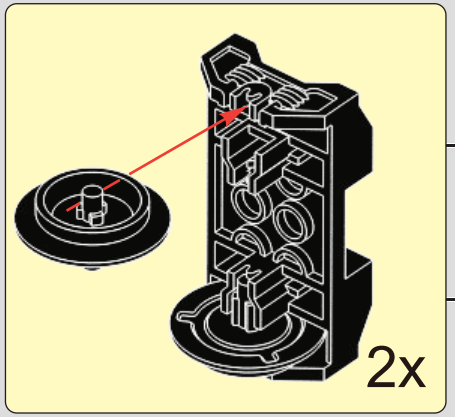

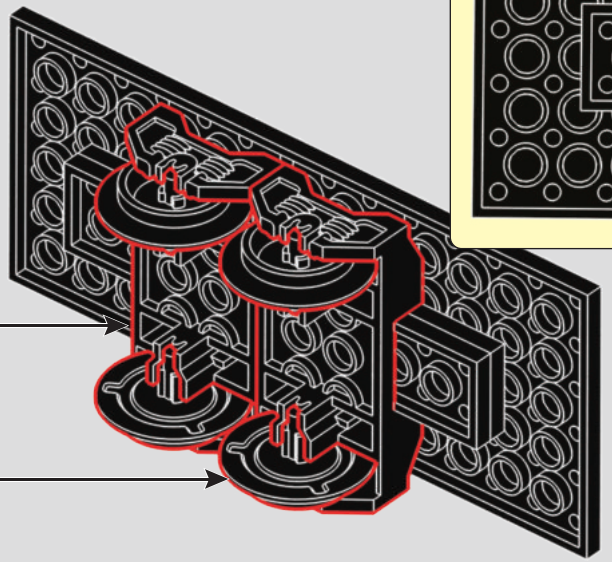

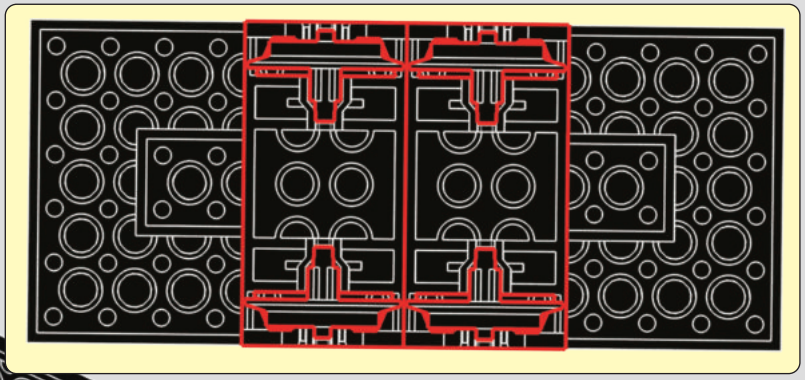

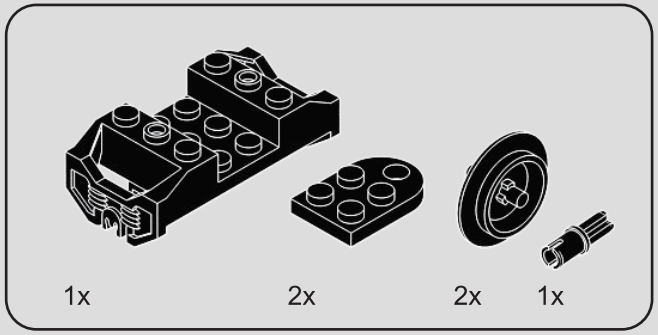

132

1

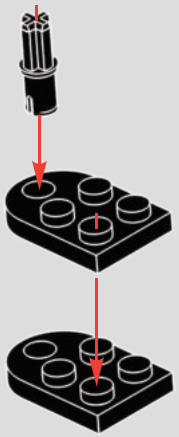

2

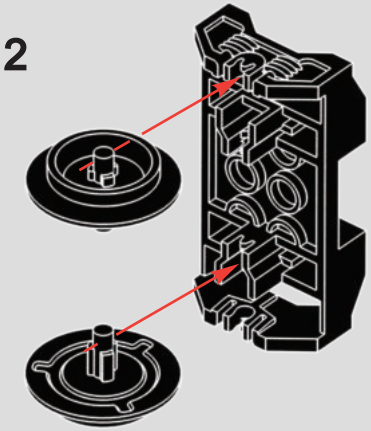

3

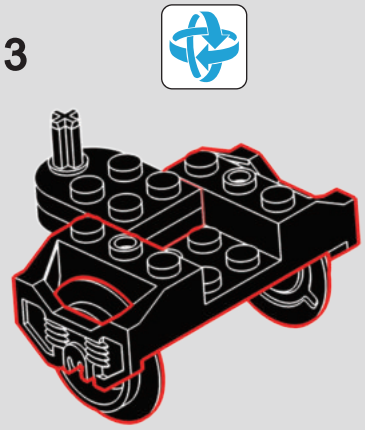

133

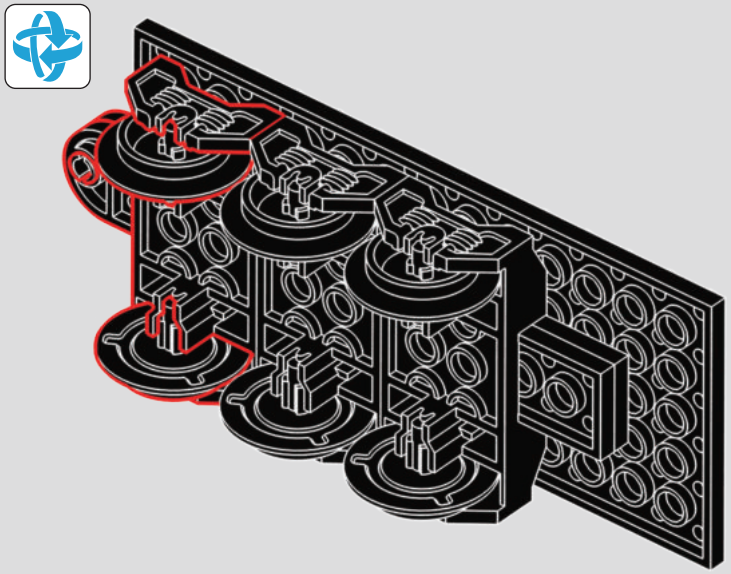

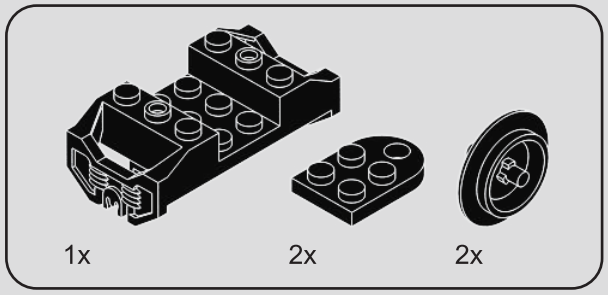

134

1

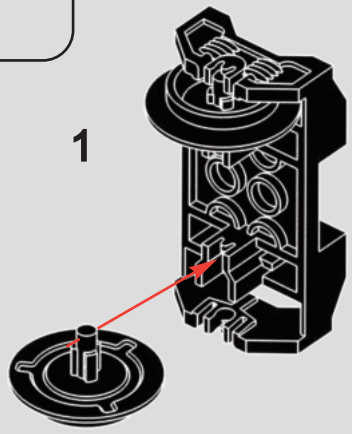

2

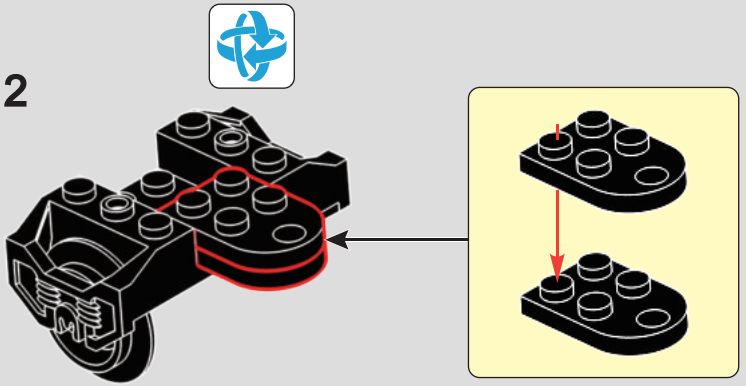

135

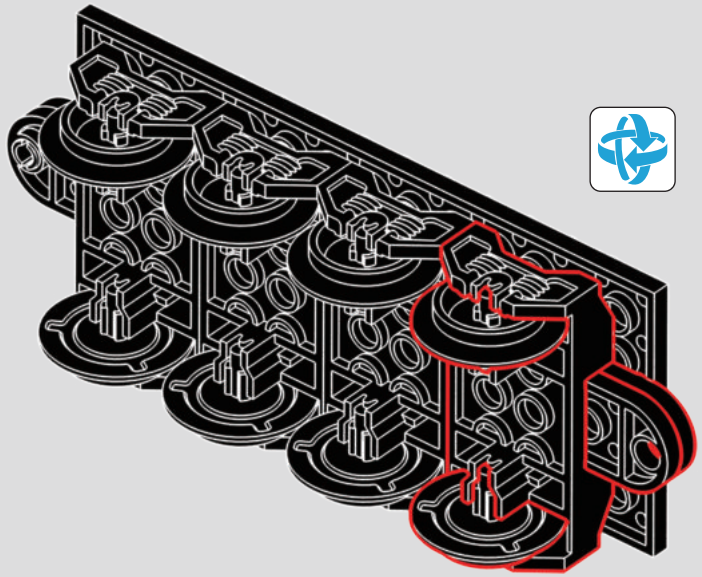

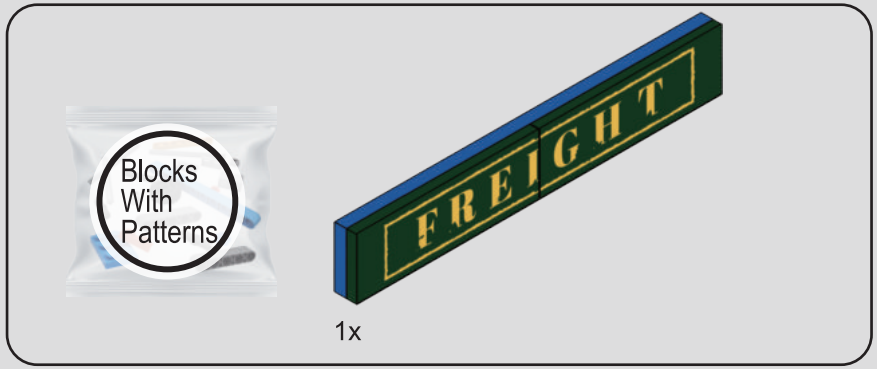

136

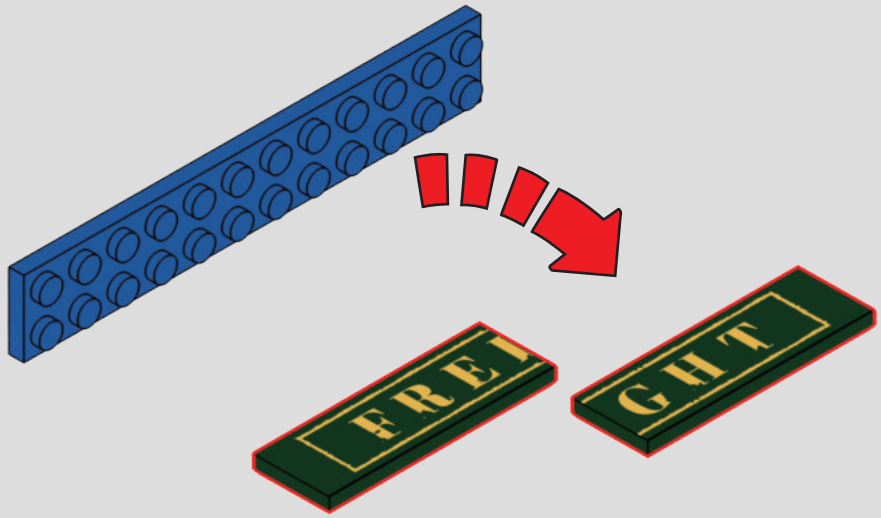

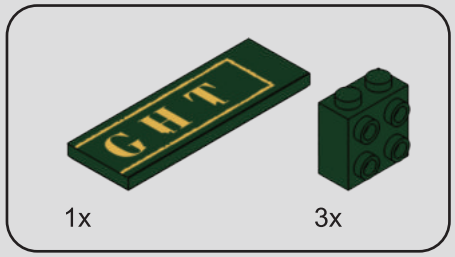

137

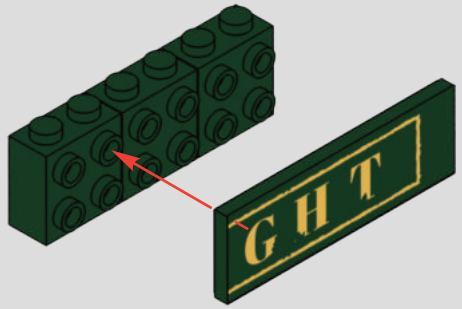

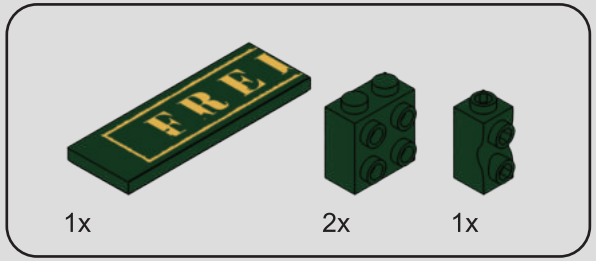

138

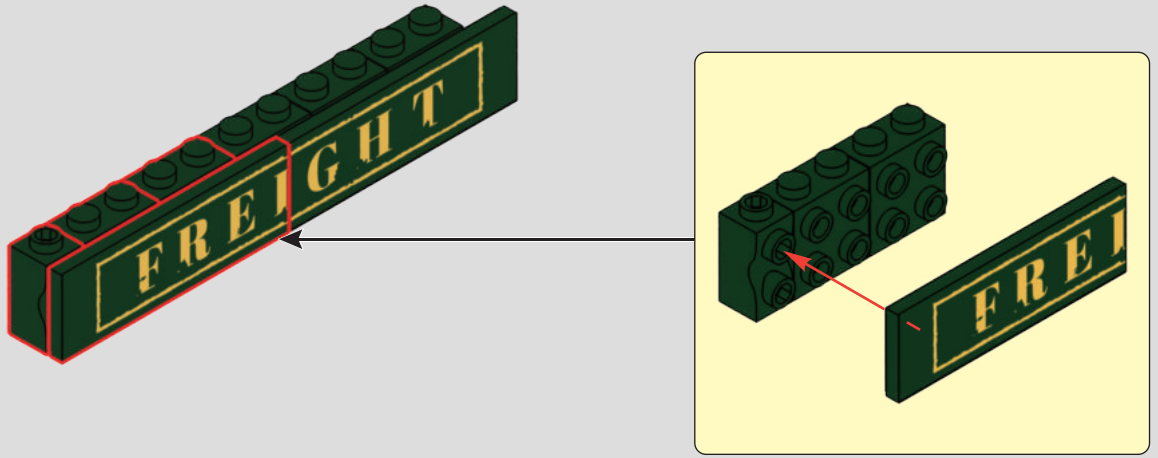

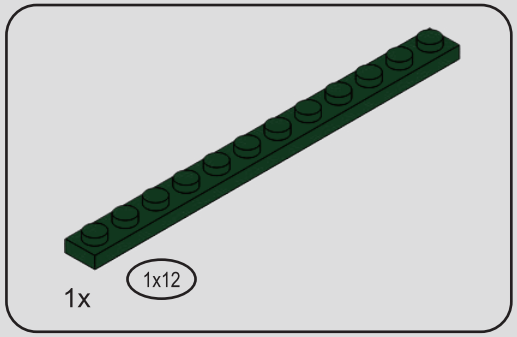

139

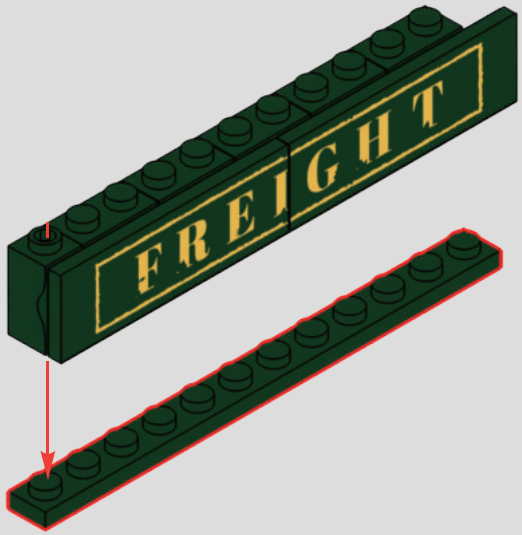

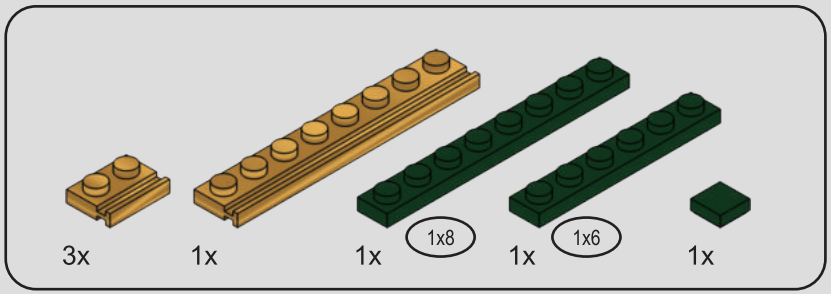

140

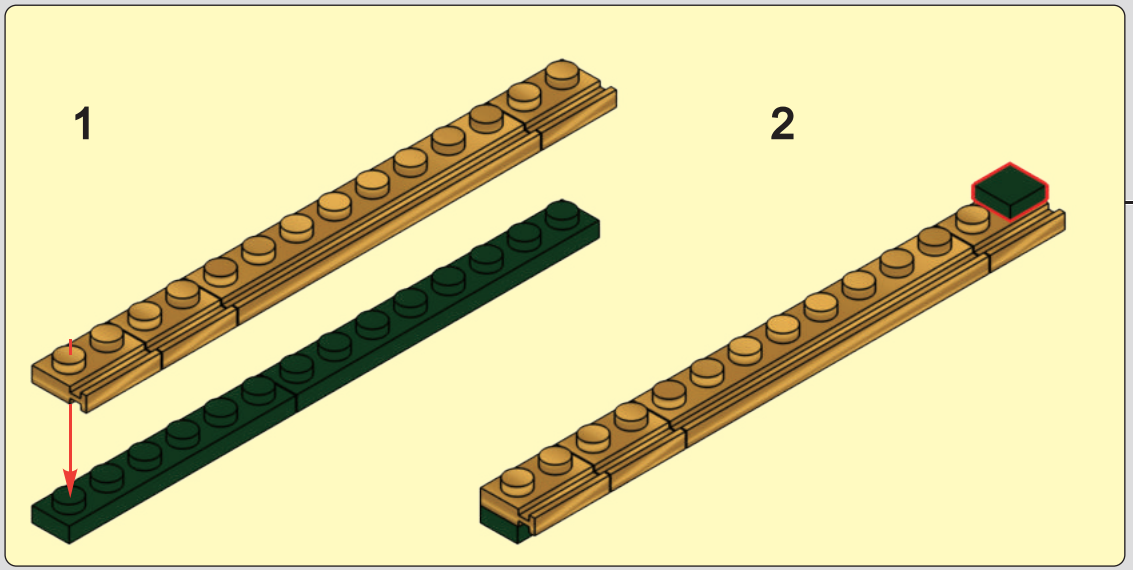

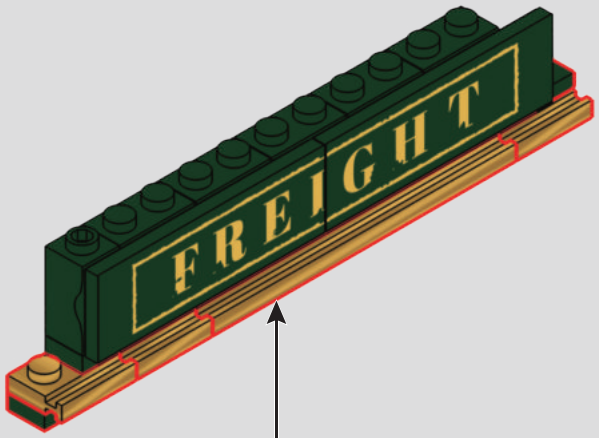

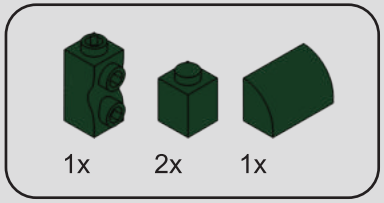

141

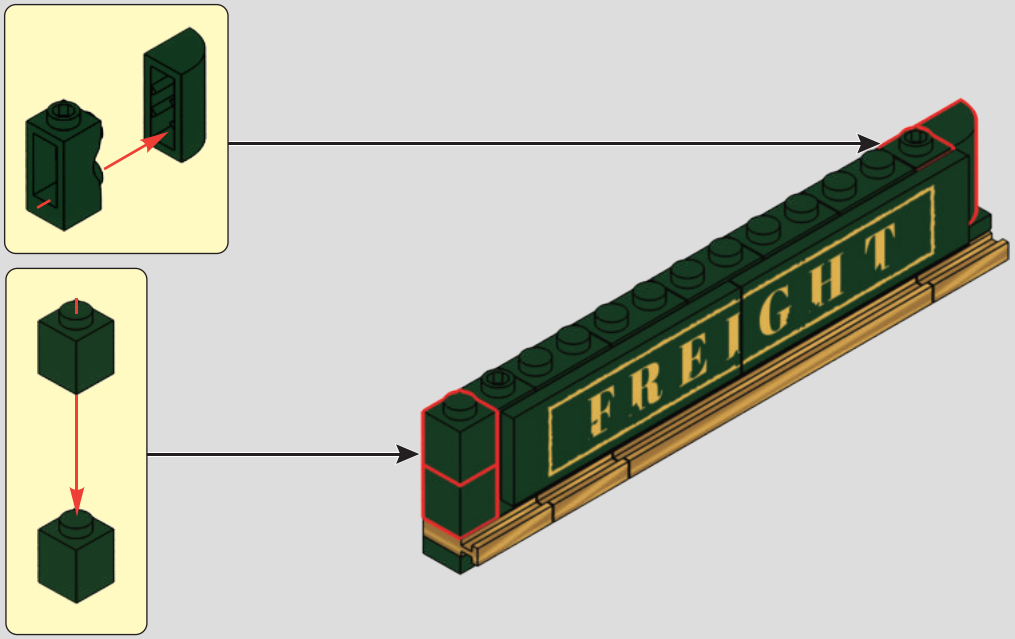

142

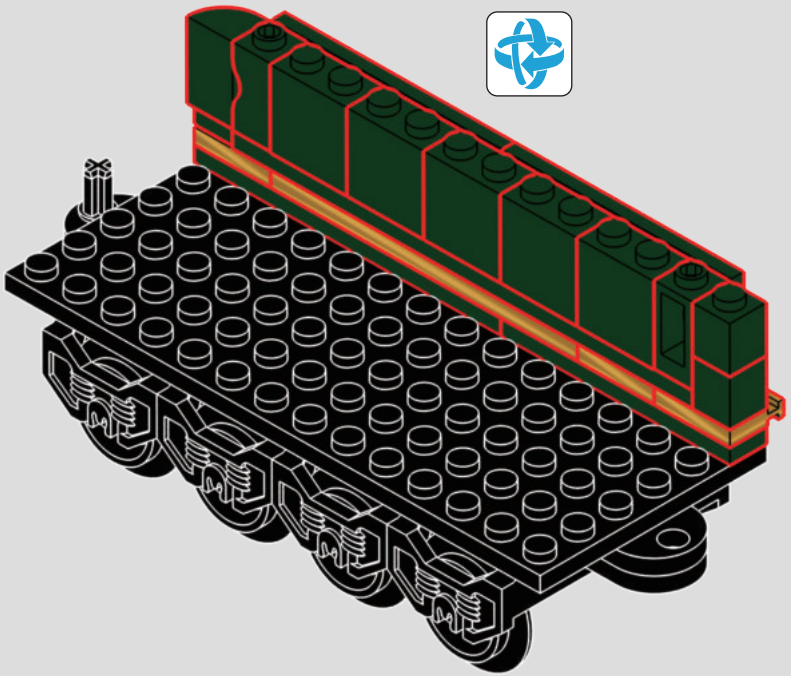

143

1

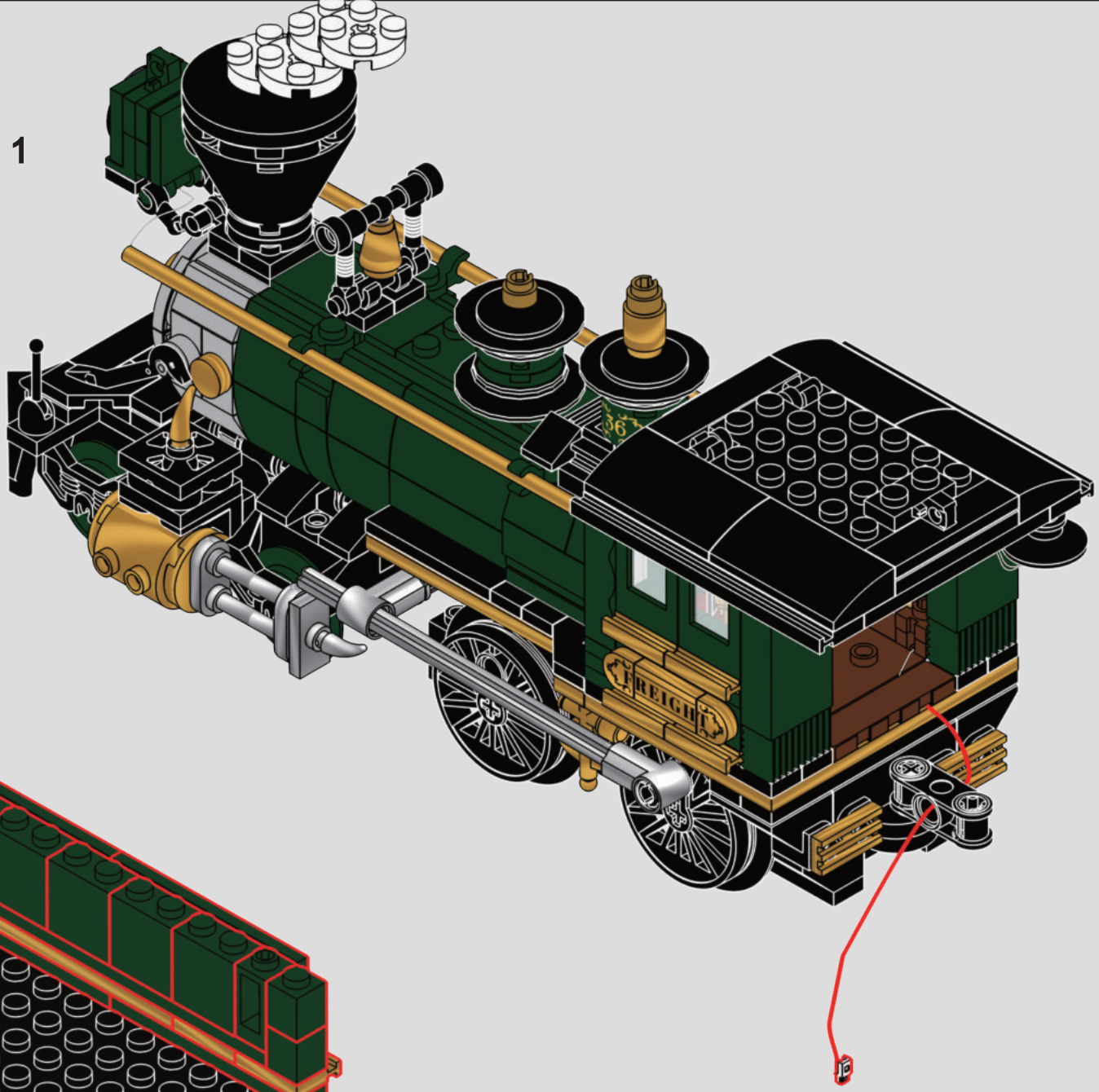

2

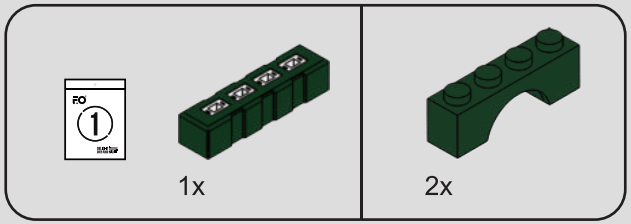

144

1

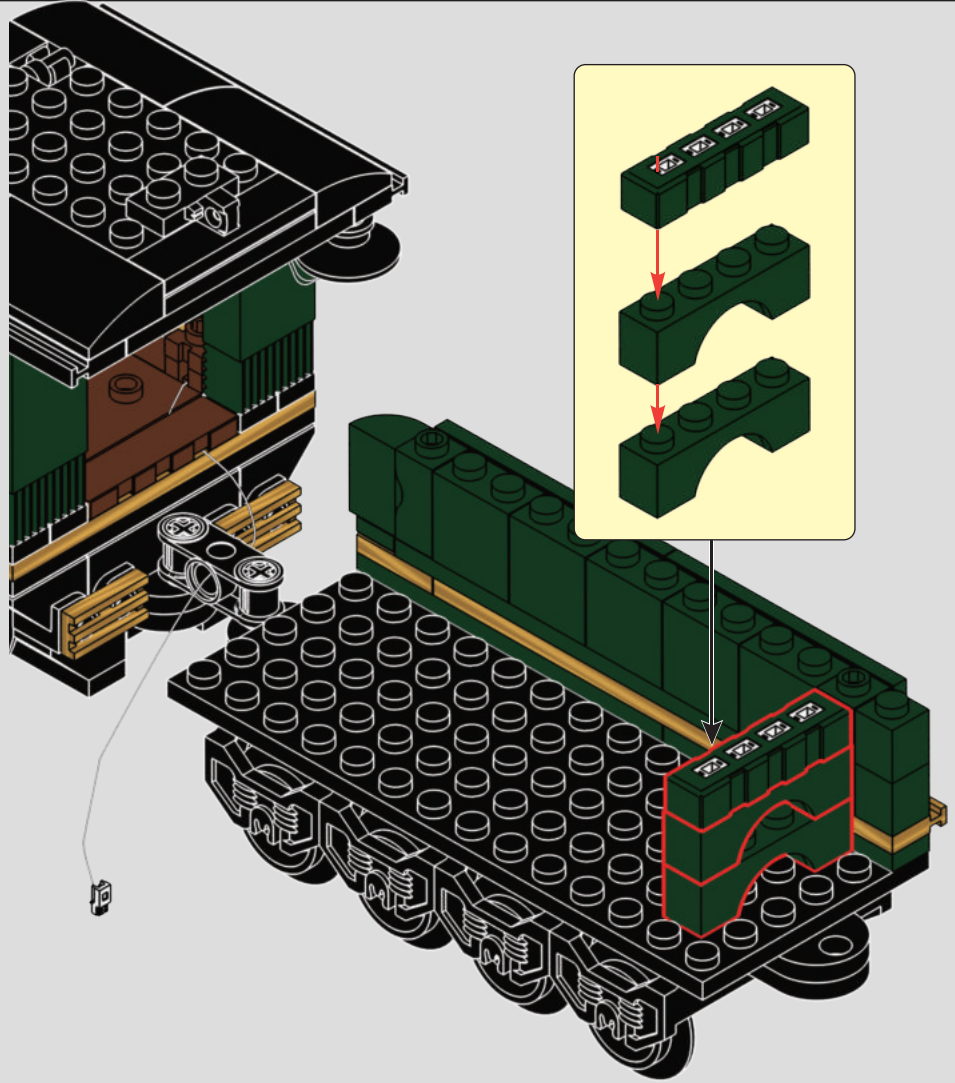

2

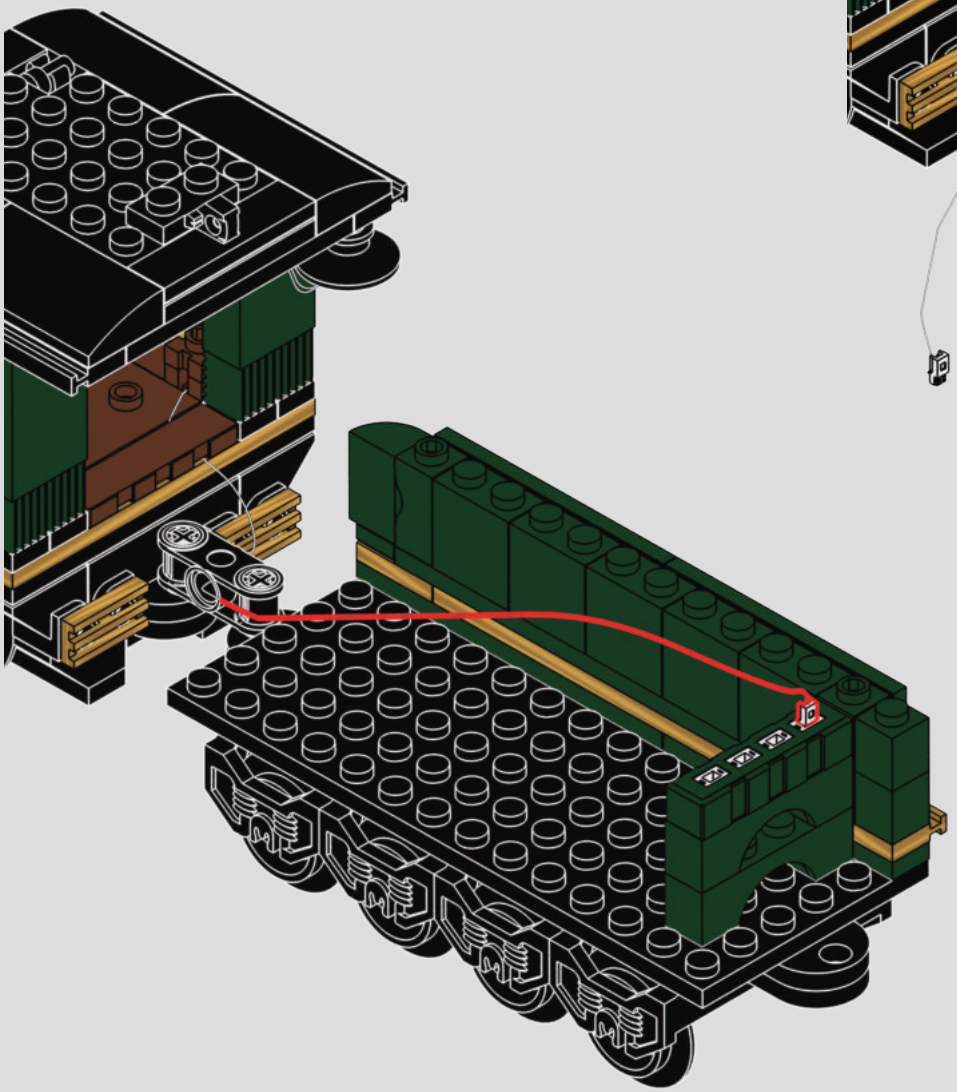

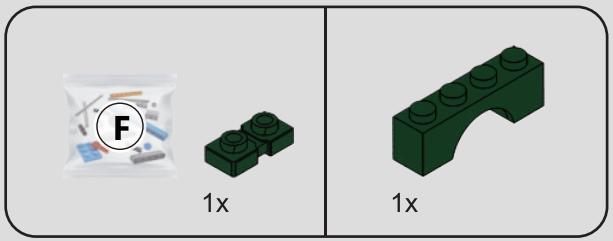

145

1

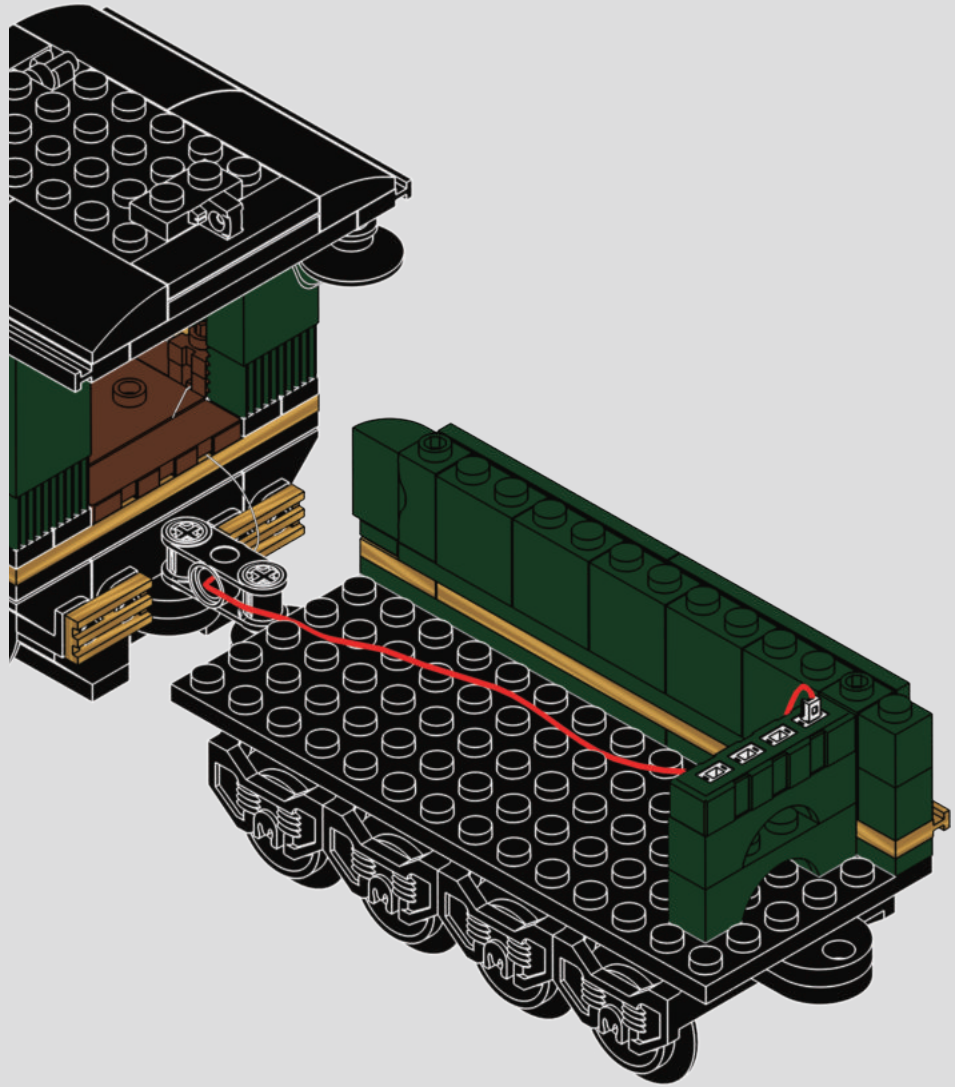

2

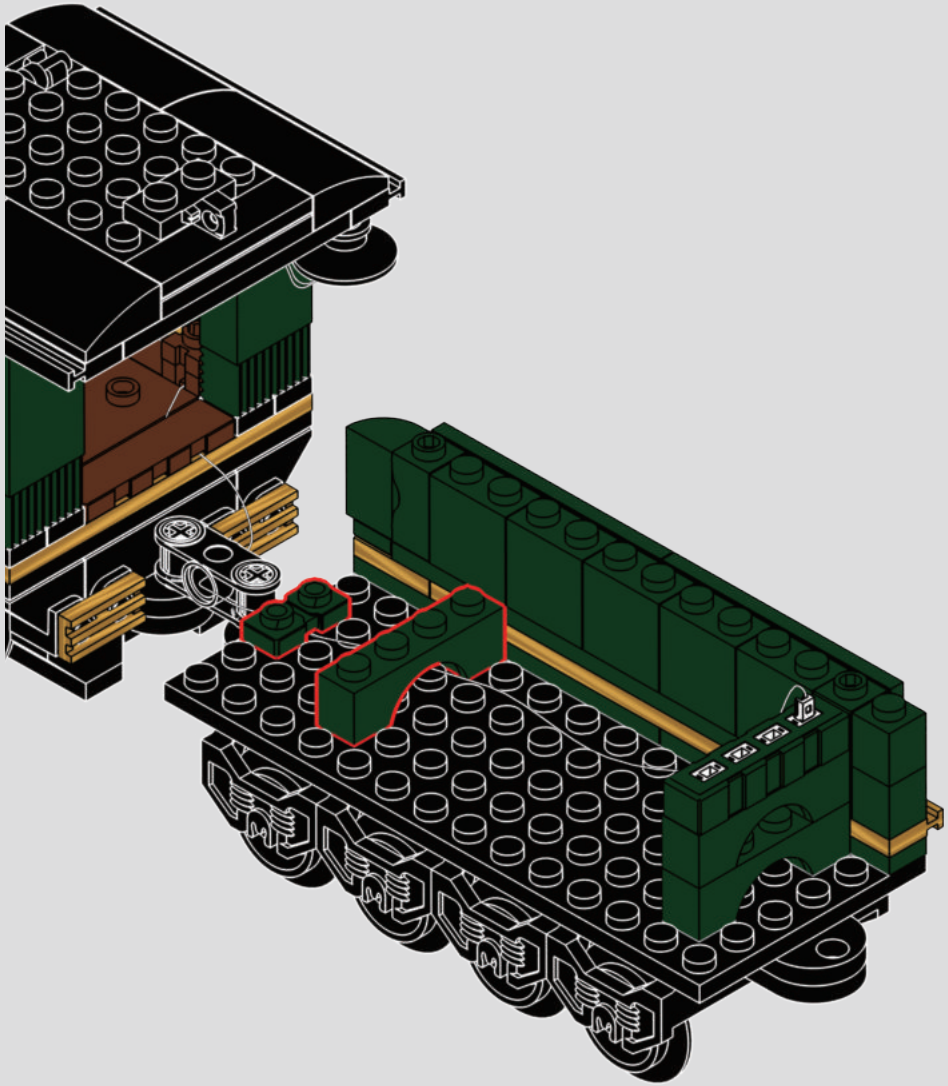

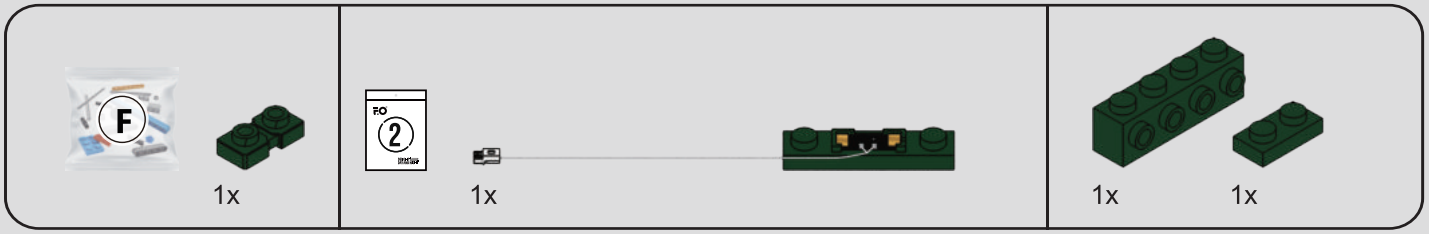

146

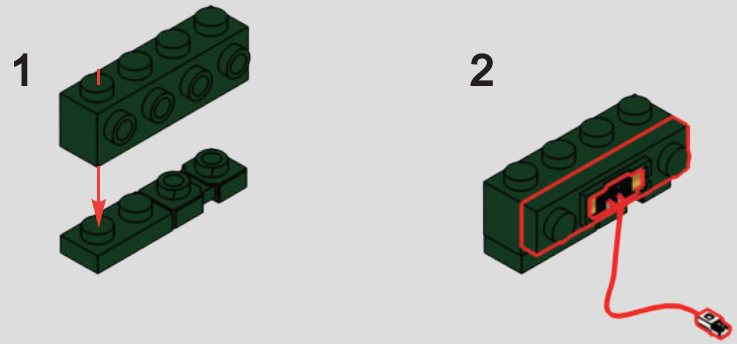

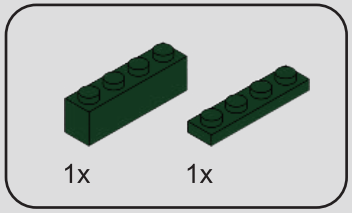

147

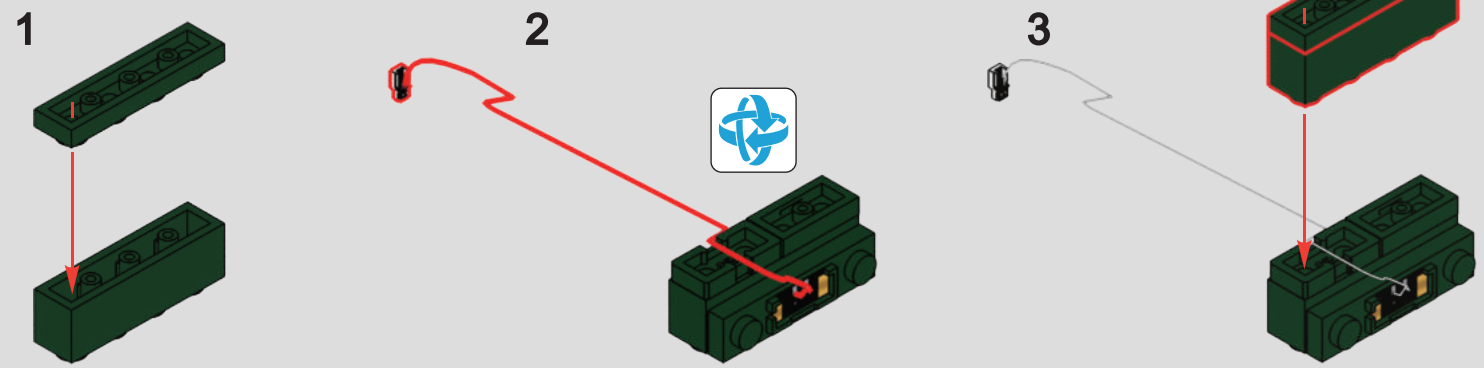

148

1

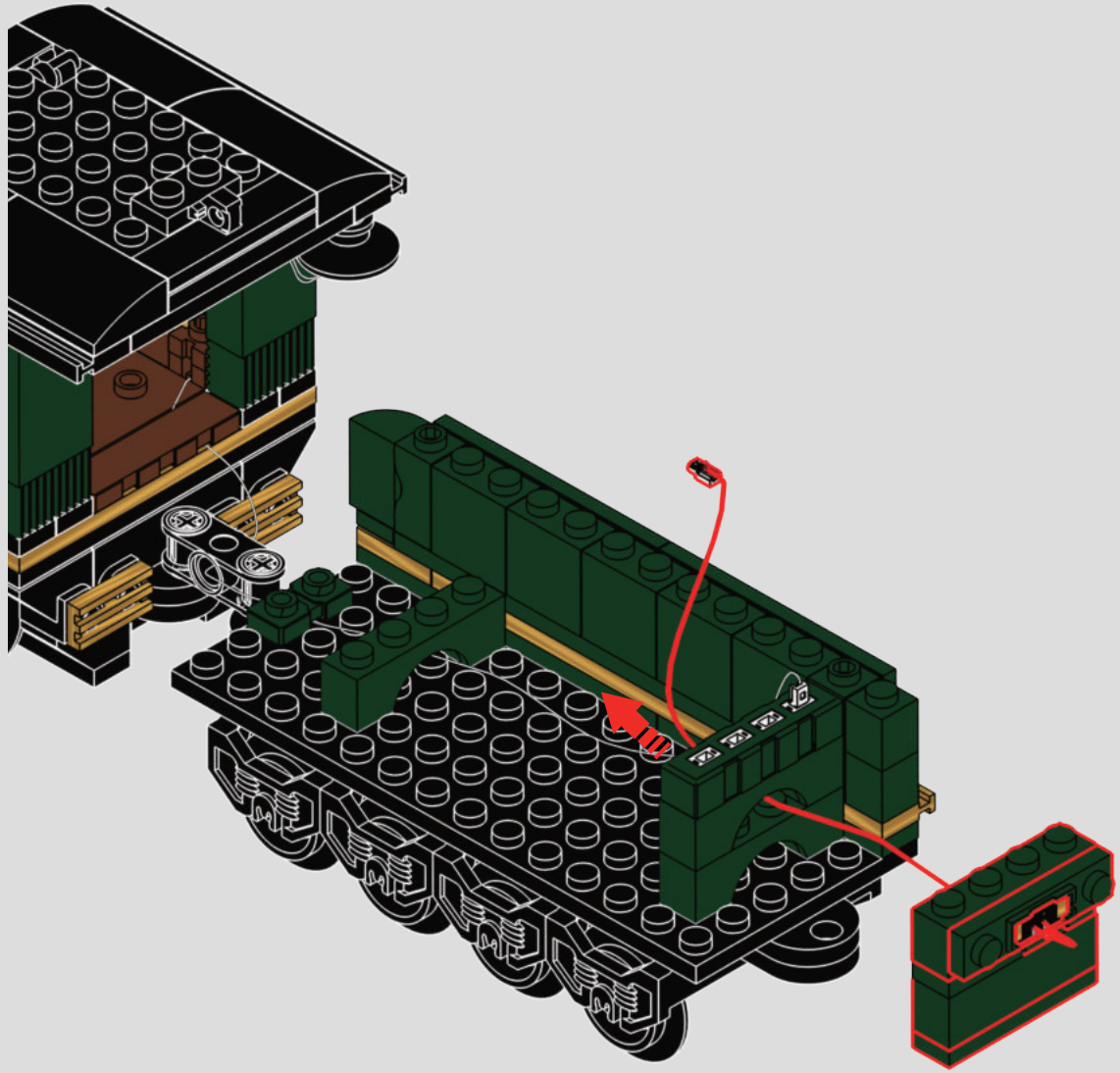

2

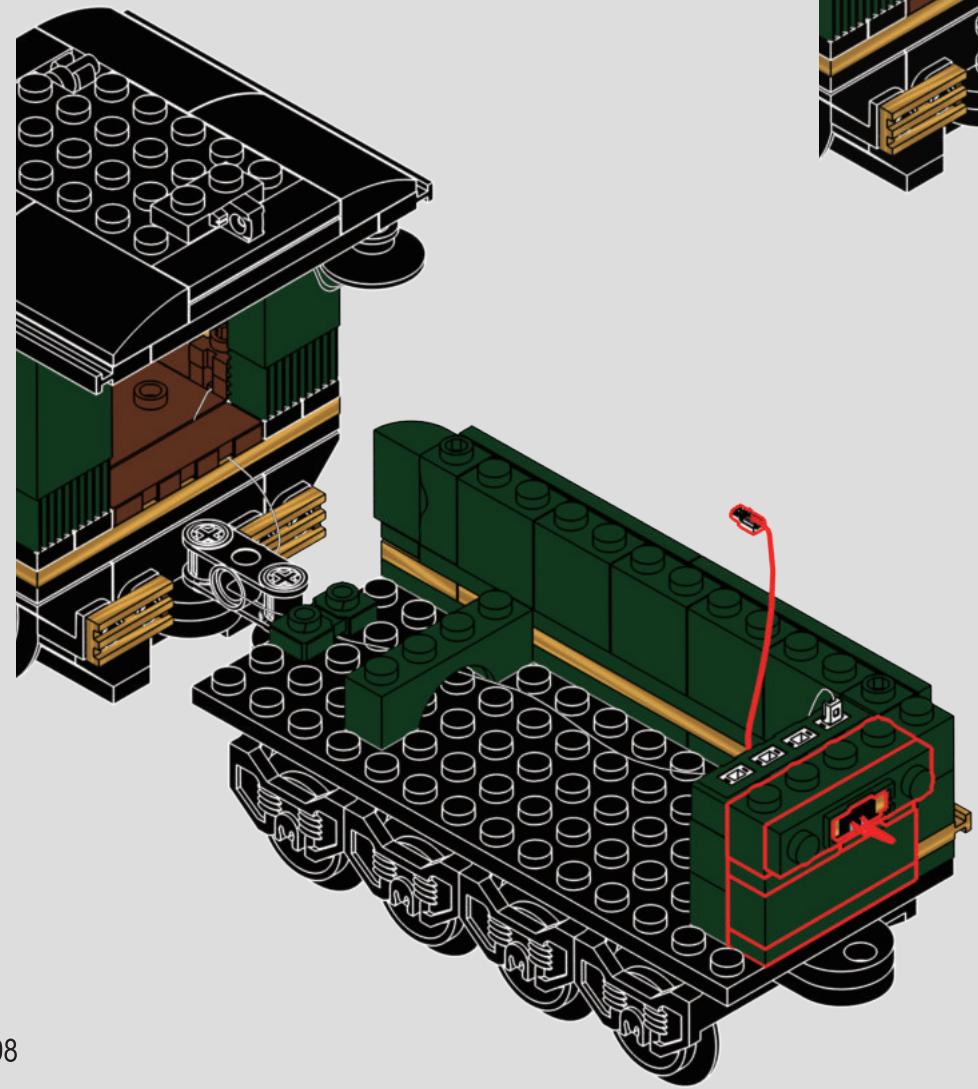

149

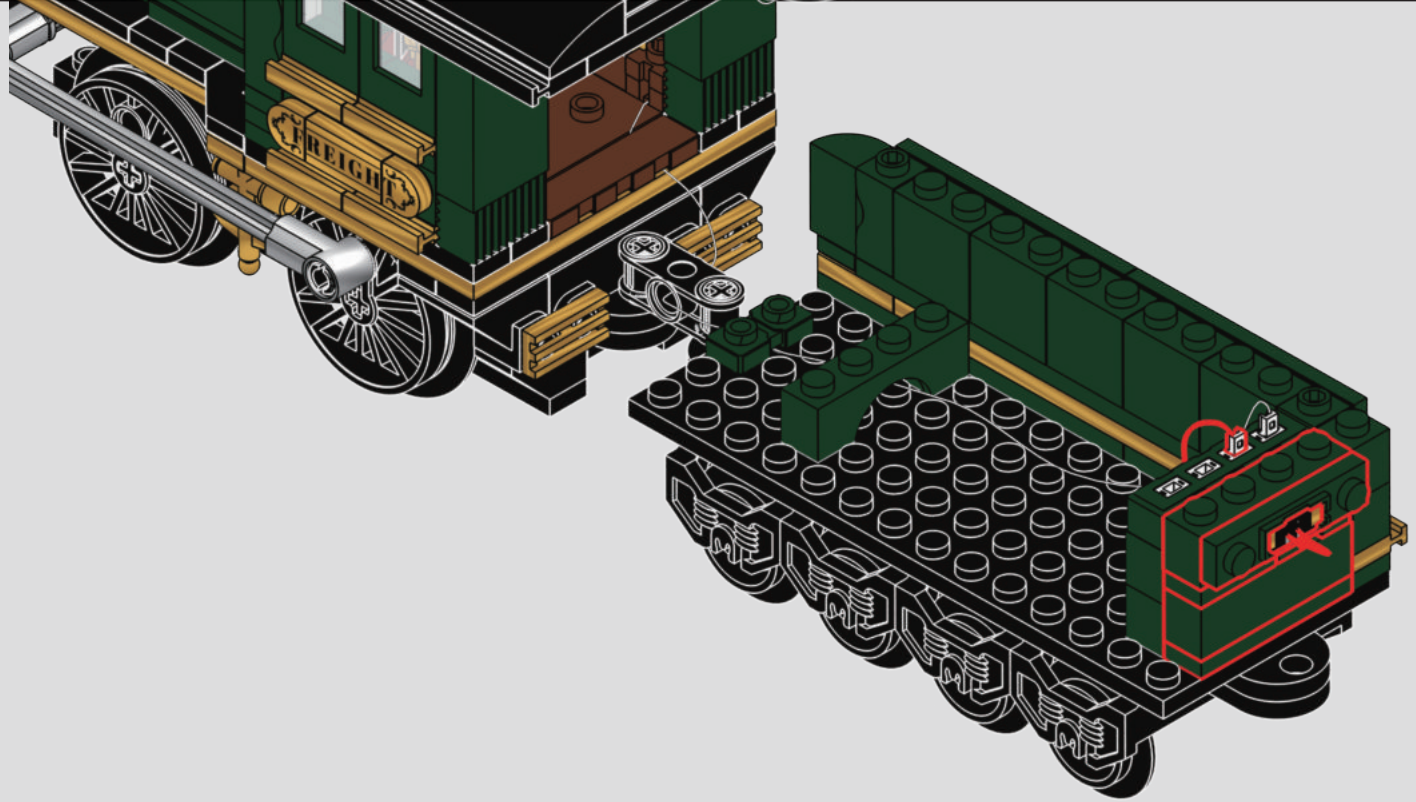

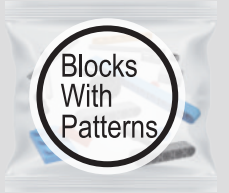

1x

150

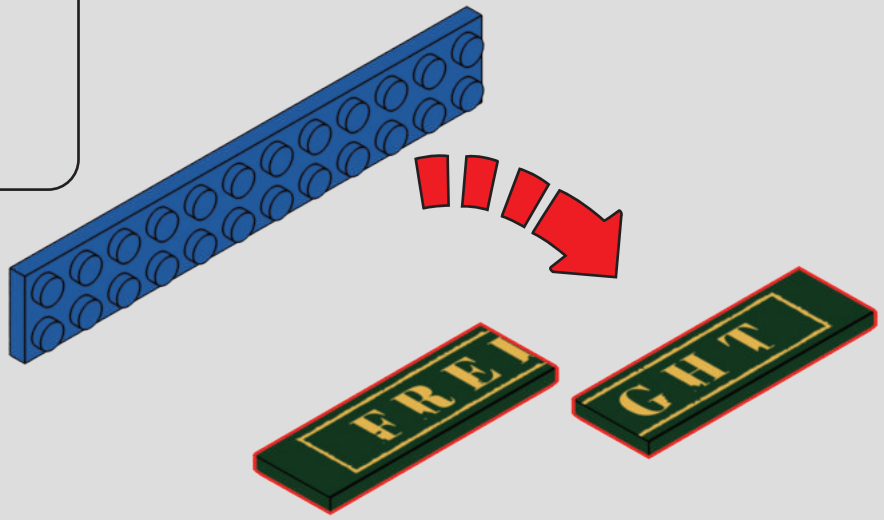

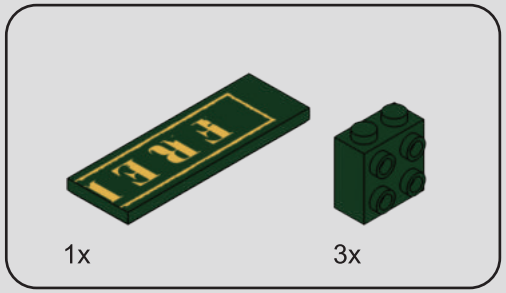

151

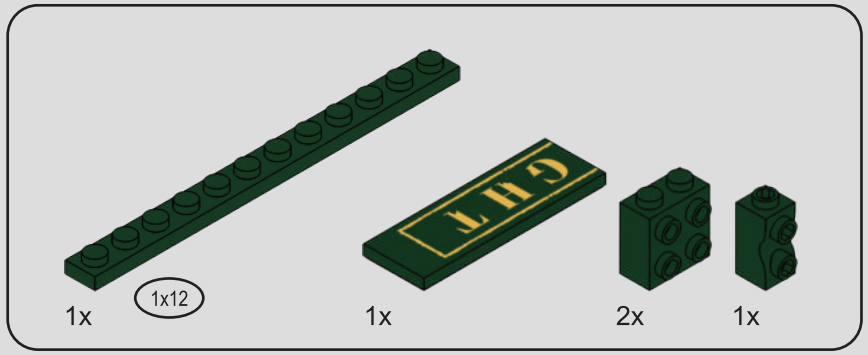

152

1

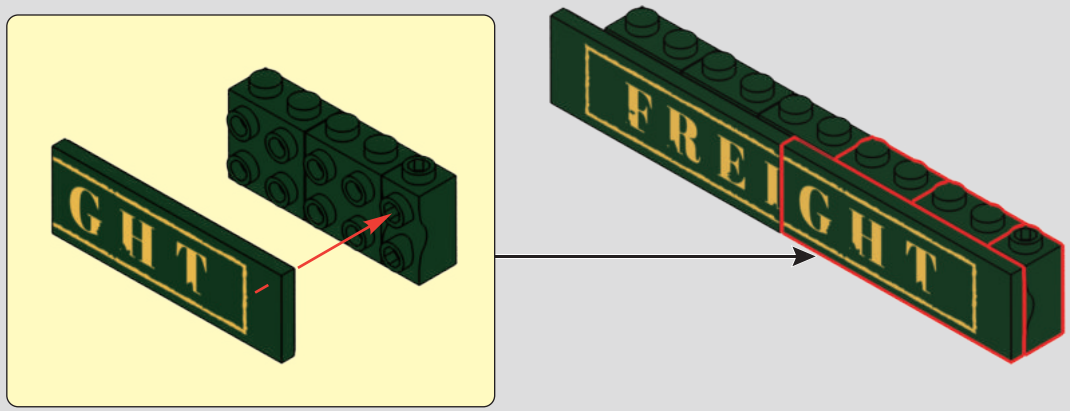

2

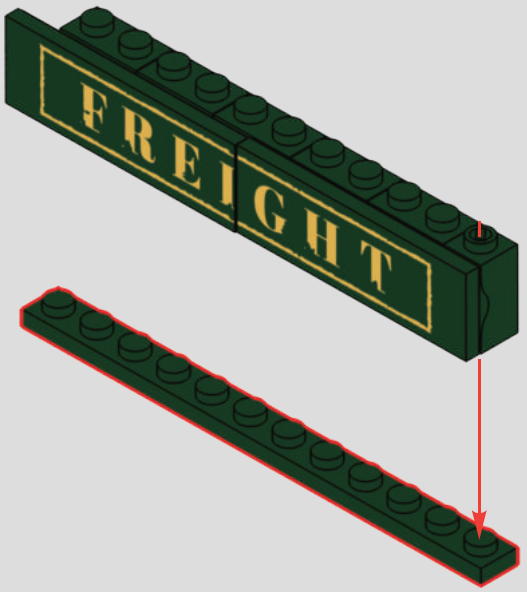

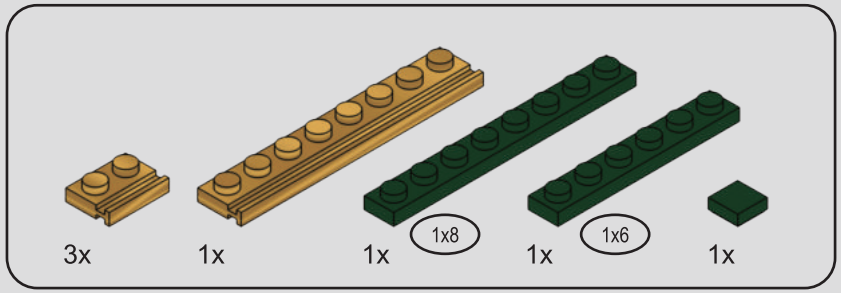

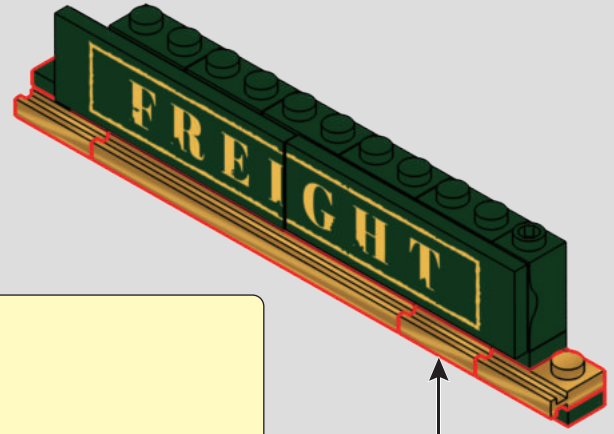

153

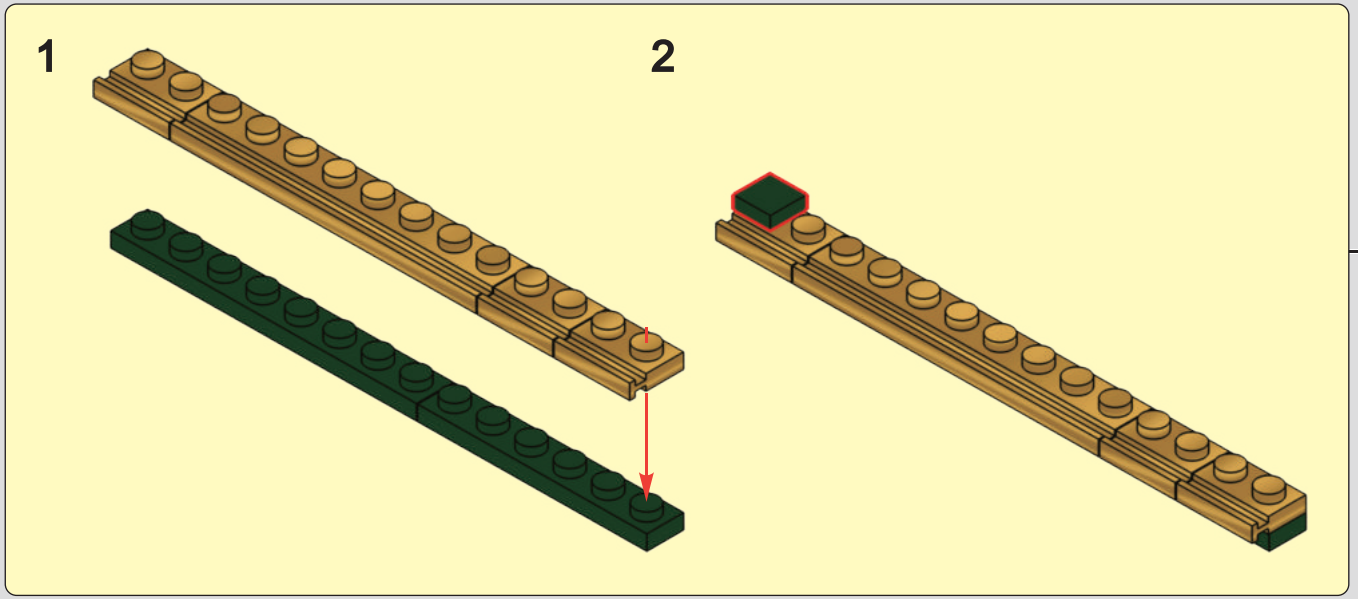

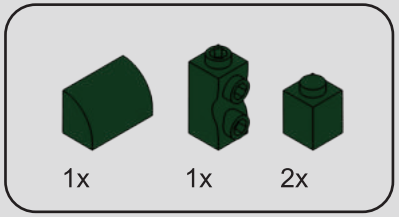

154

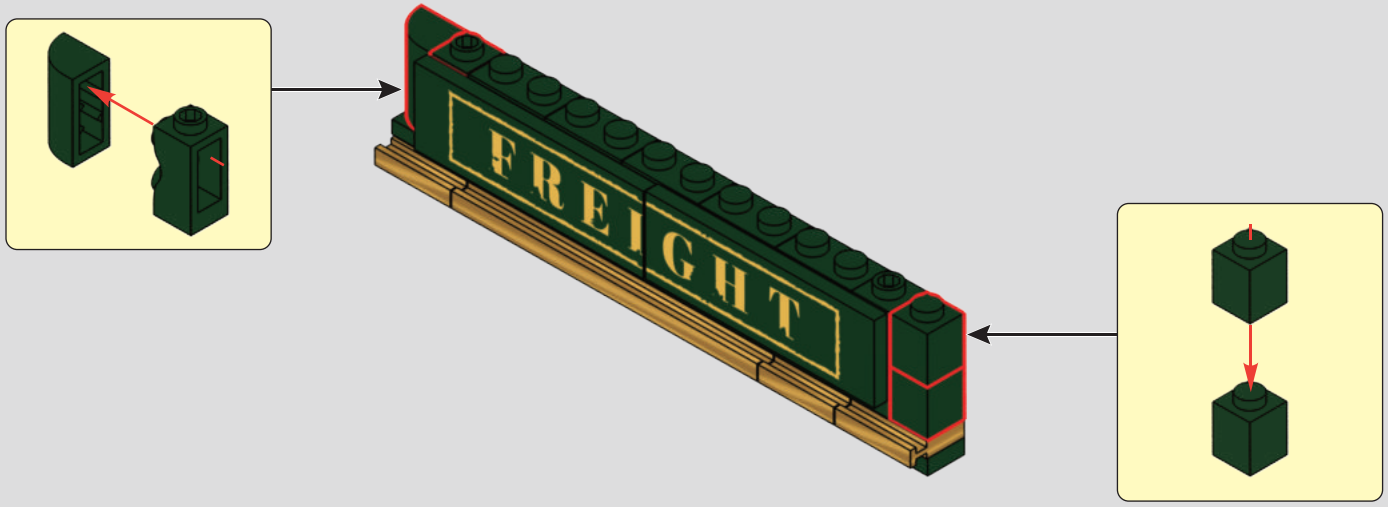

155

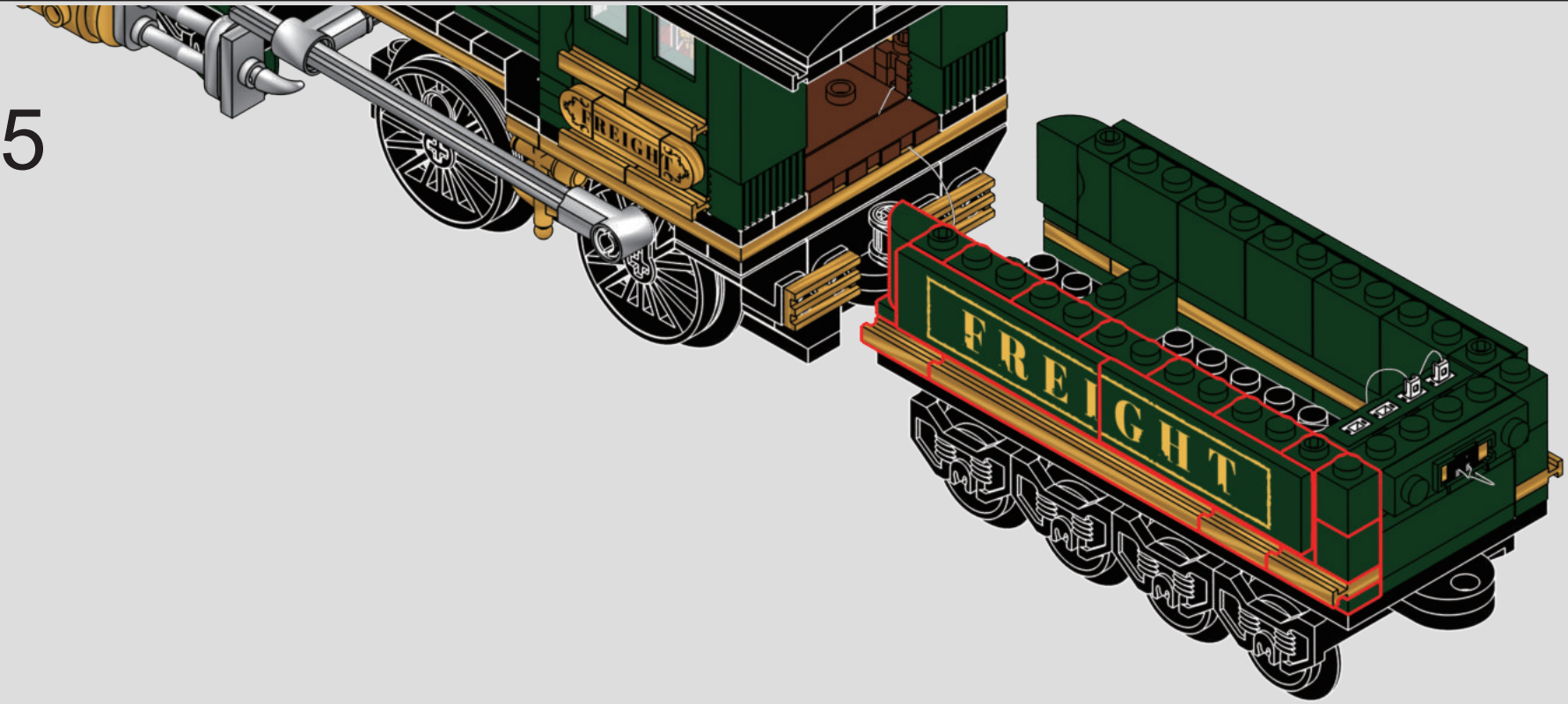

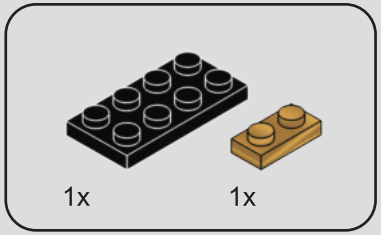

156

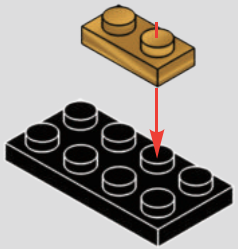

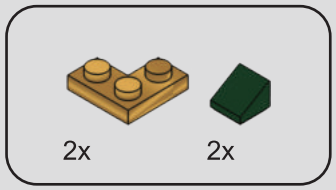

157

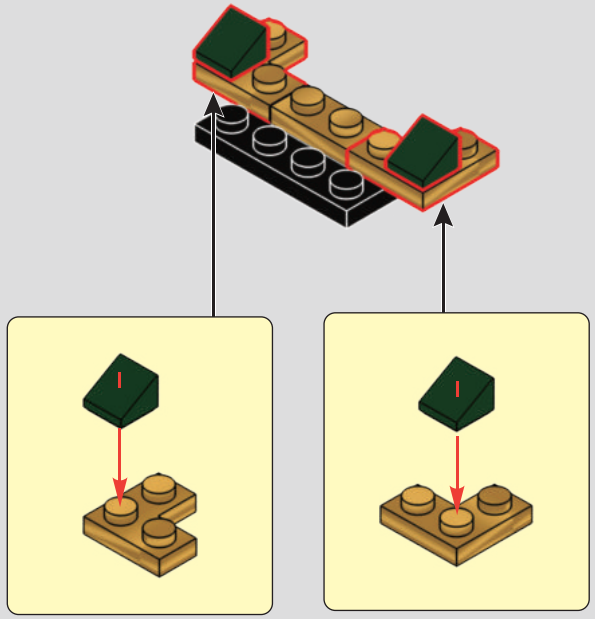

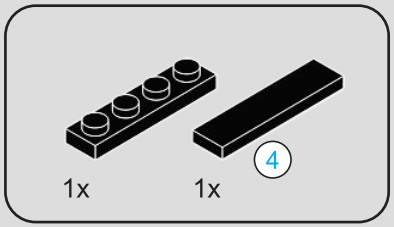

158

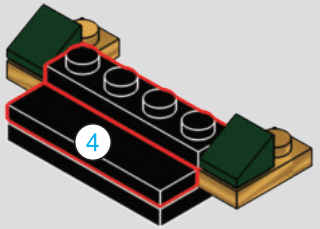

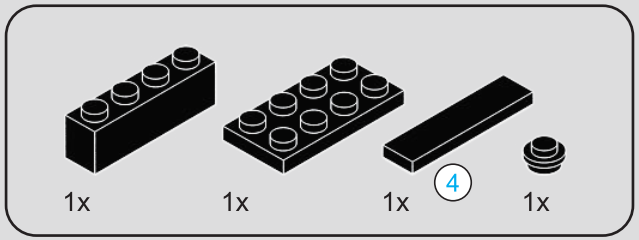

159

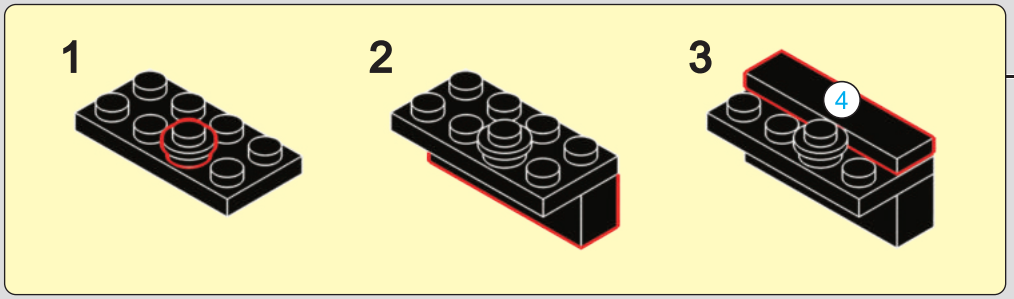

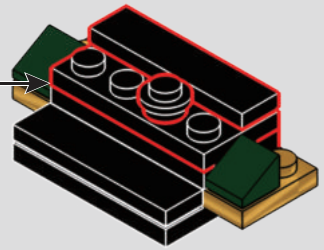

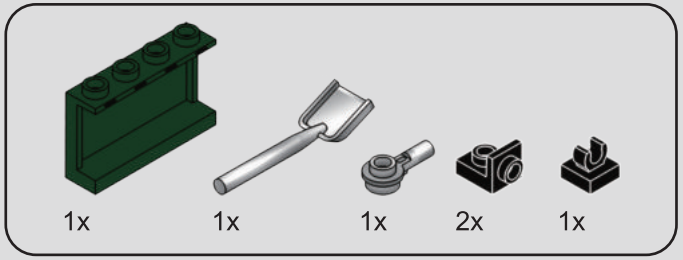

160

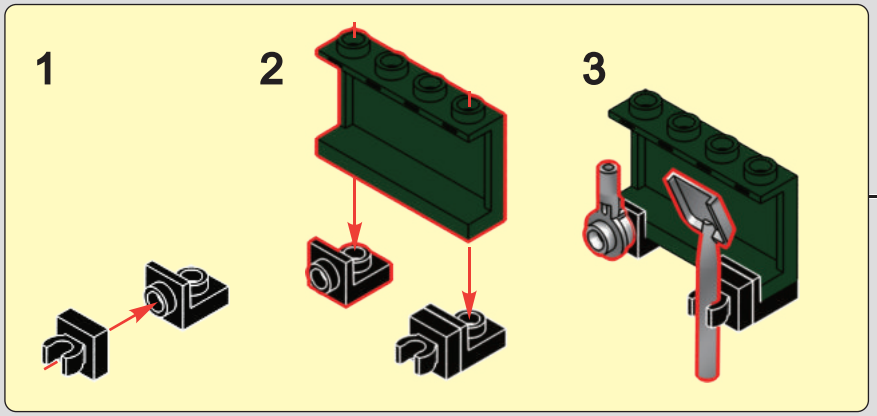

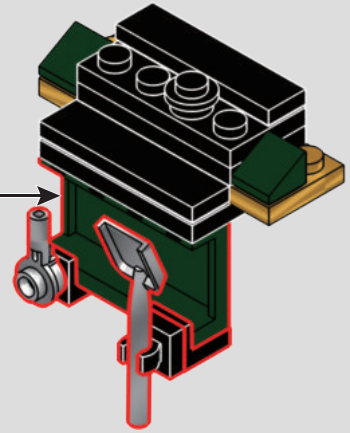

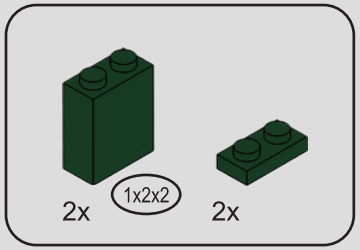

161

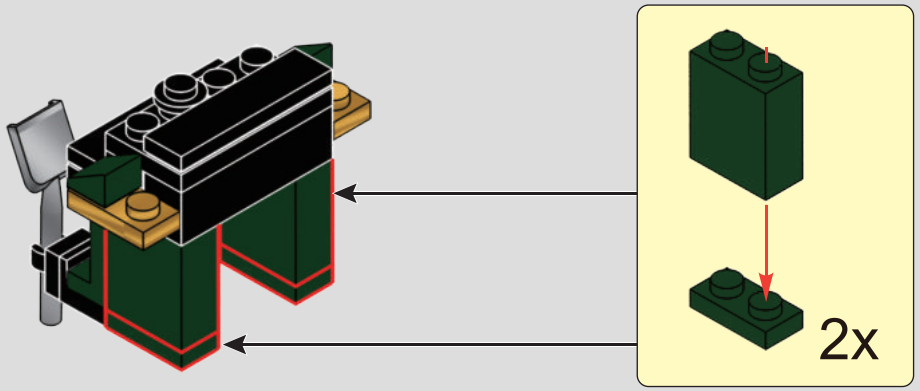

162

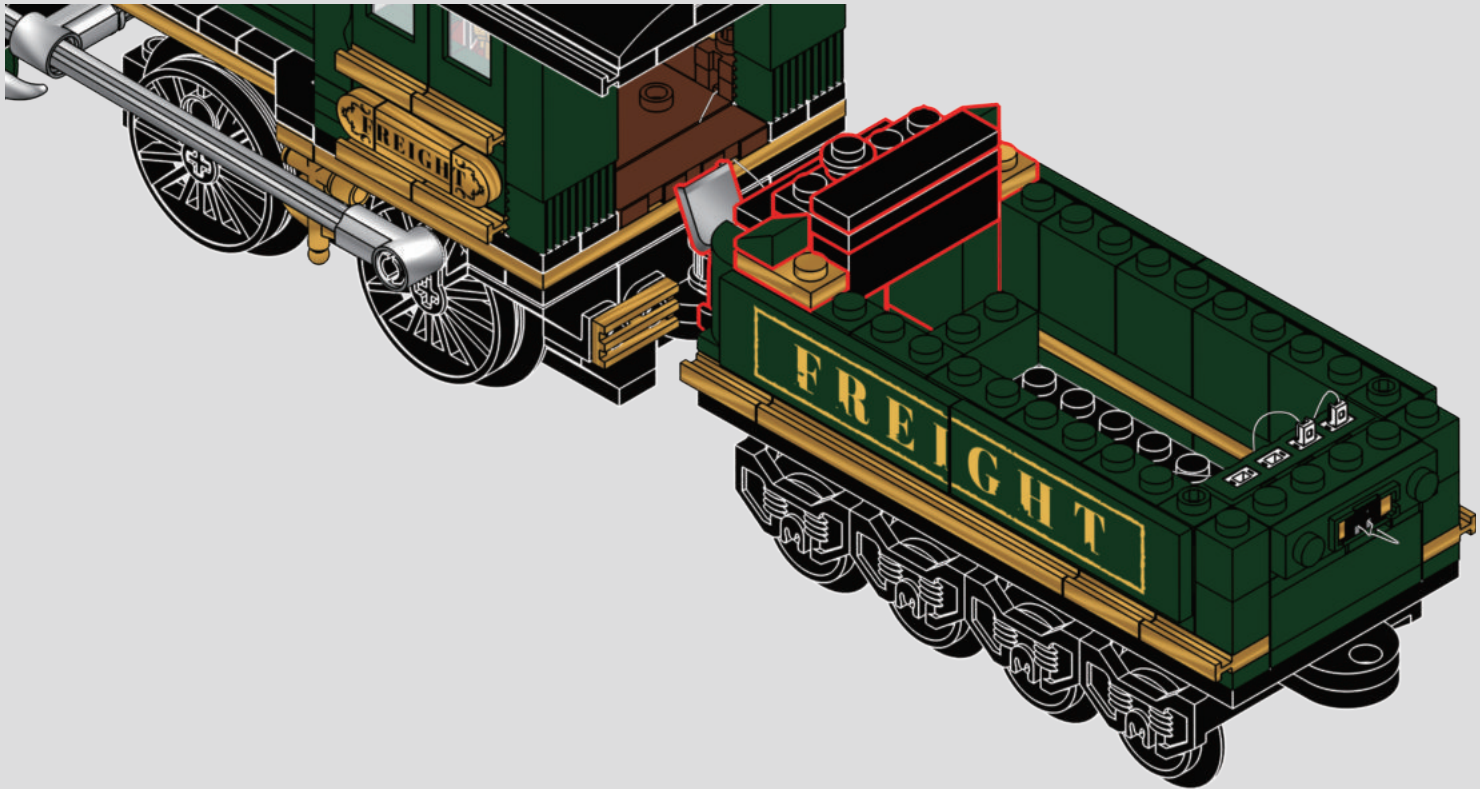

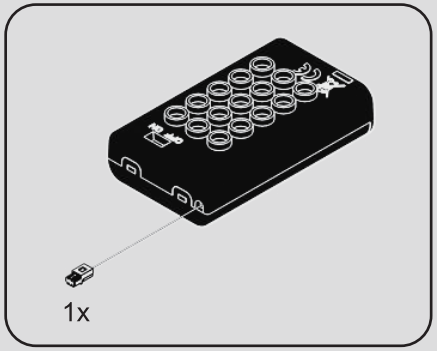

163

1

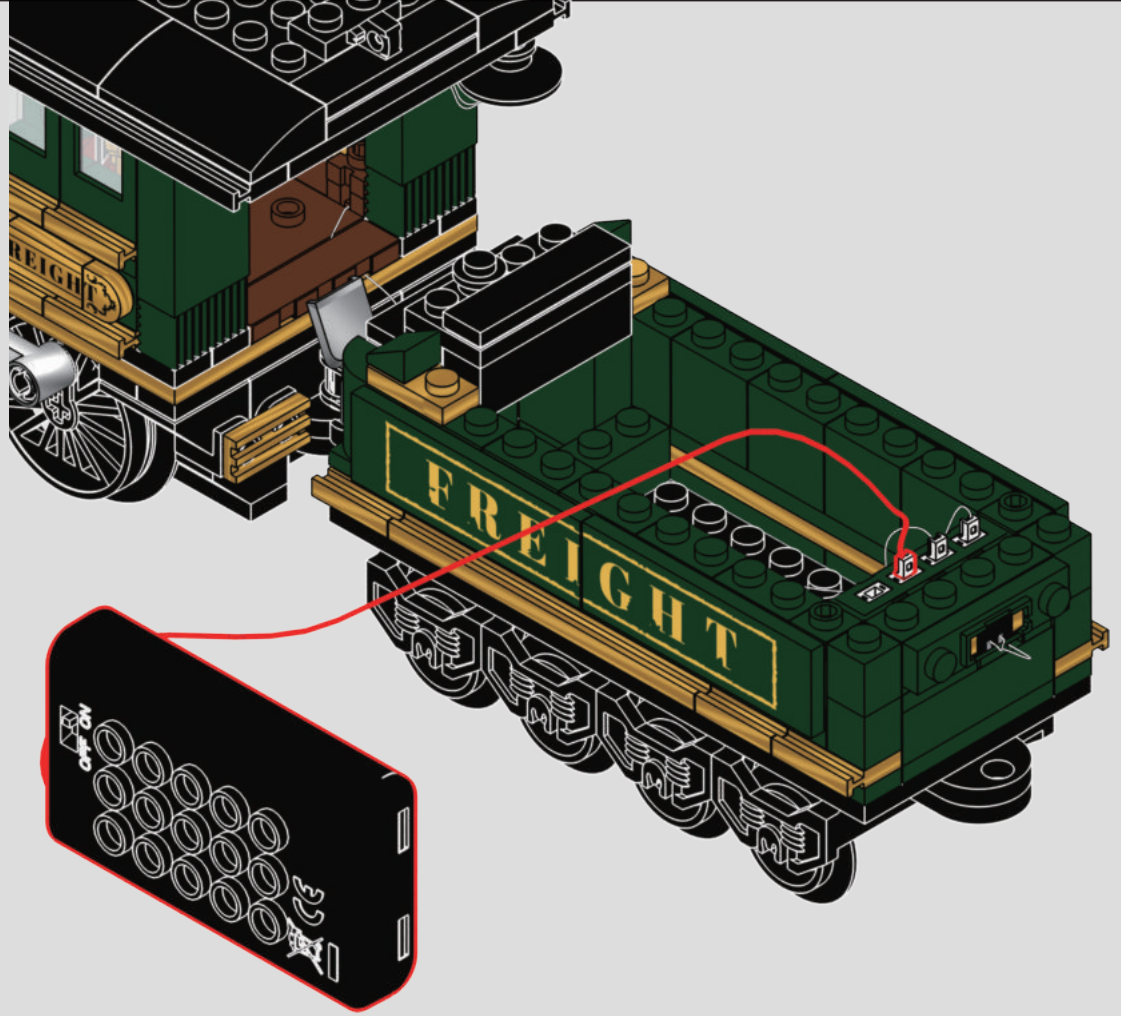

2

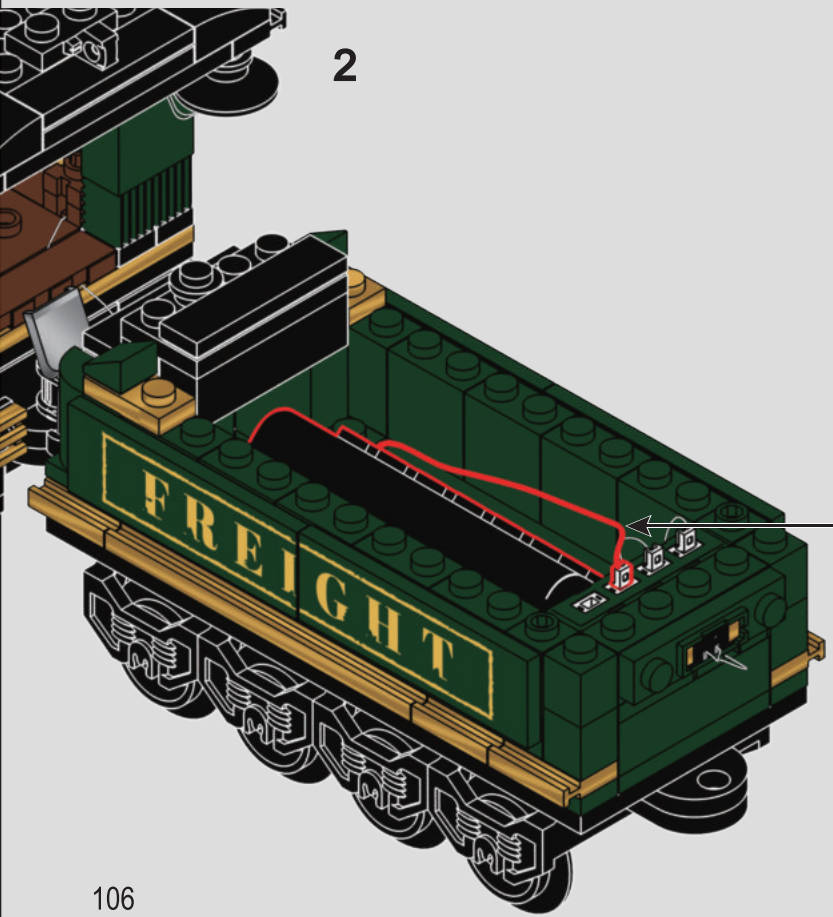

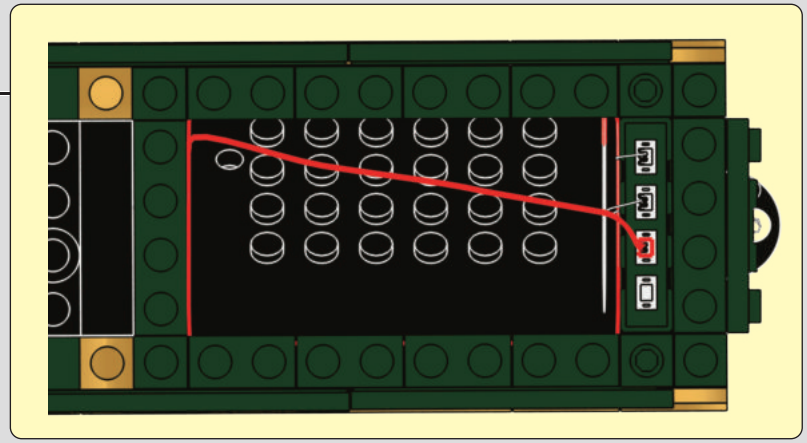

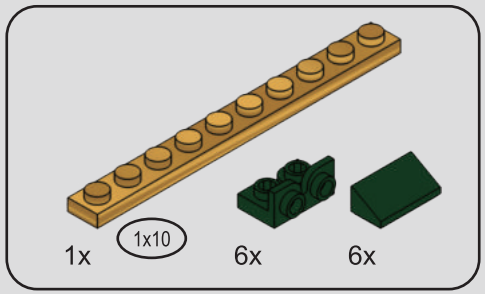

164

1

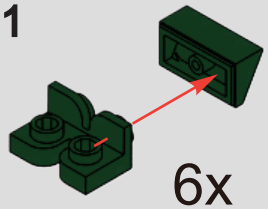

6x

2

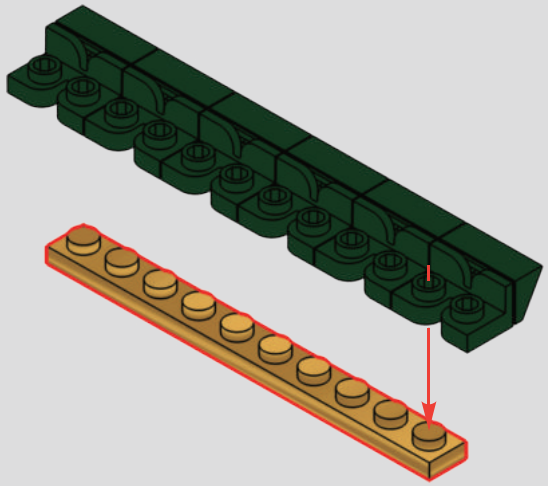

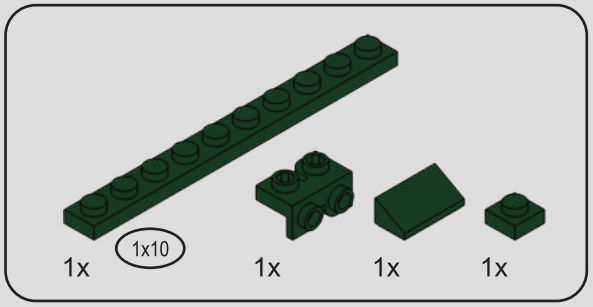

165

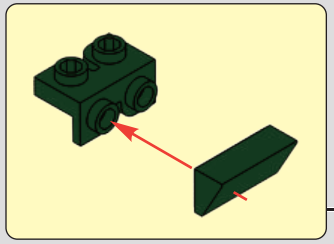

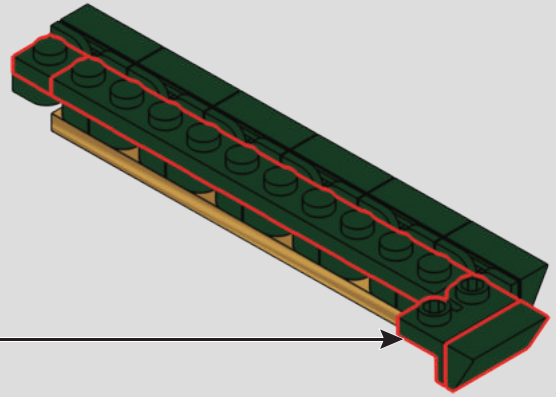

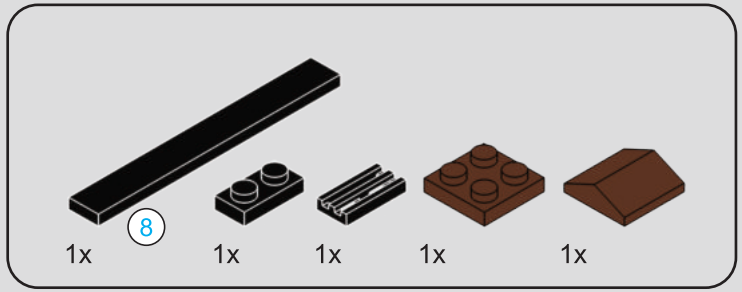

166

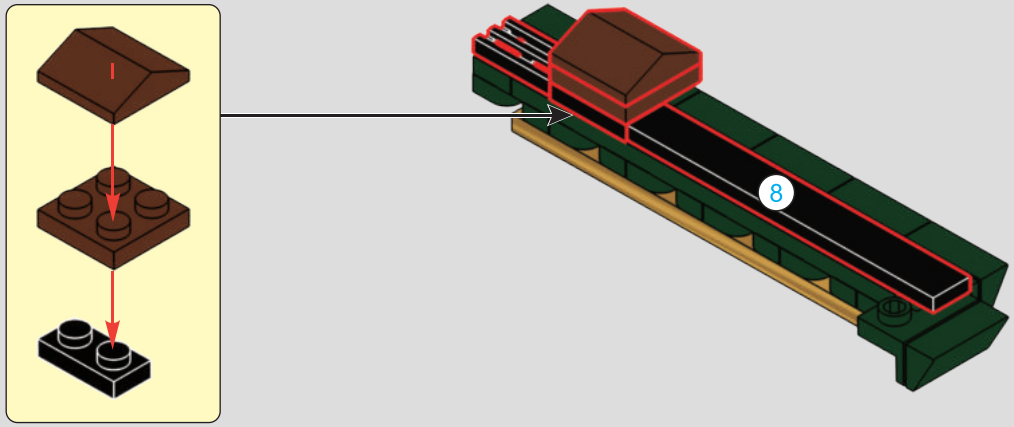

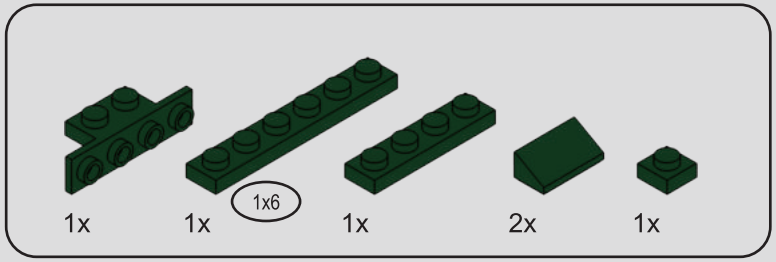

167

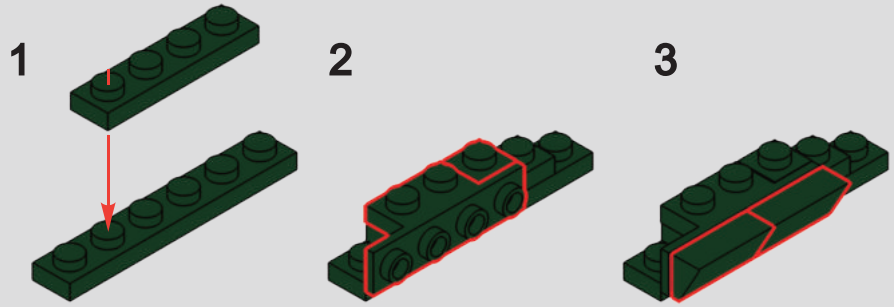

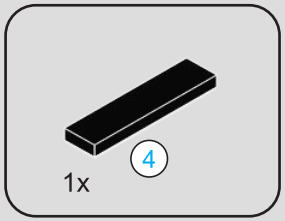

168

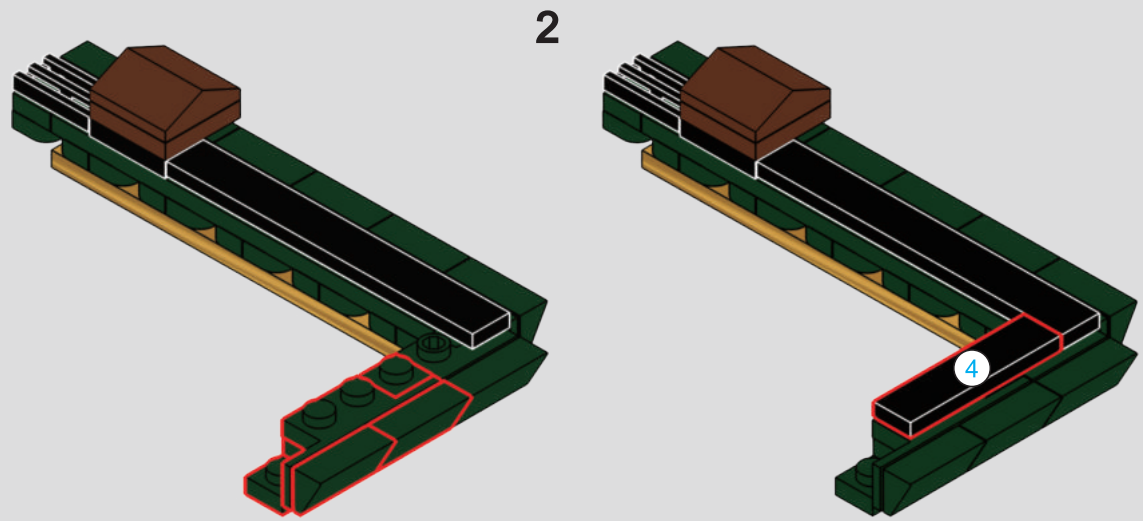

169

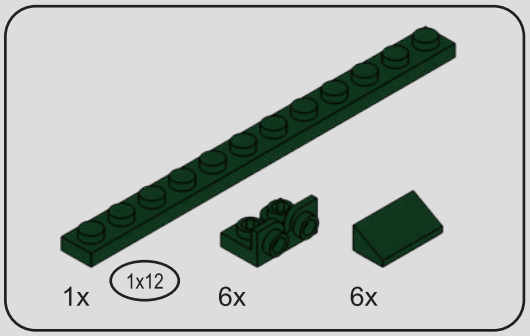

170

1

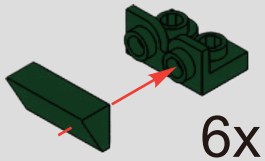

2

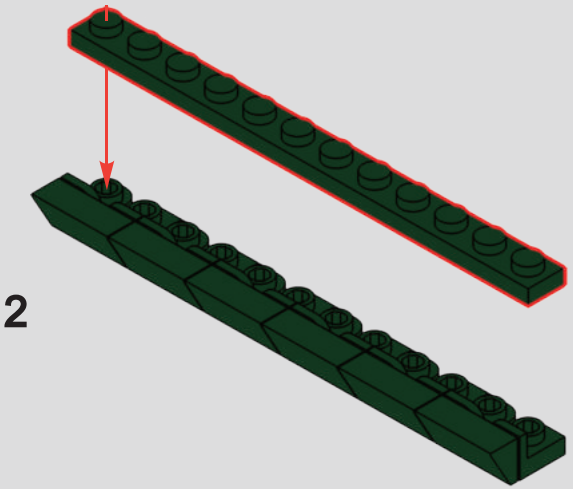

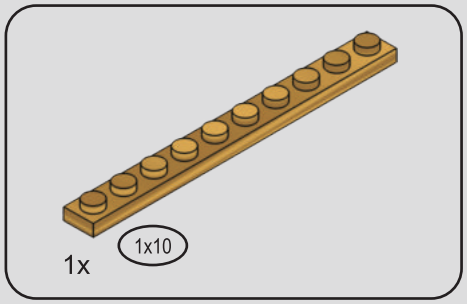

171

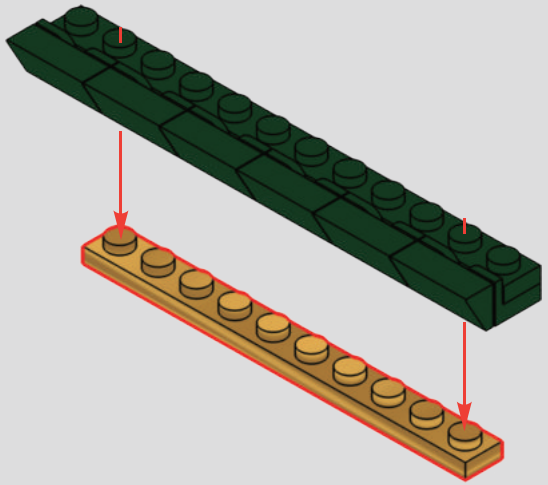

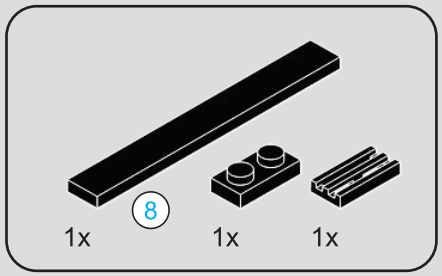

172

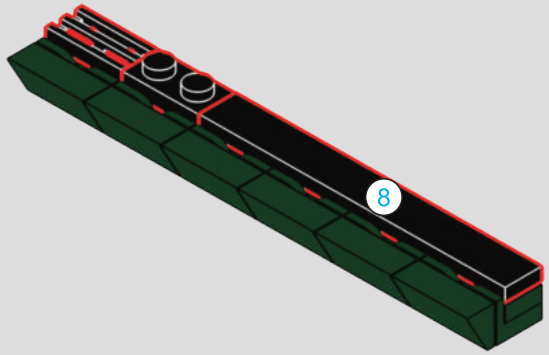

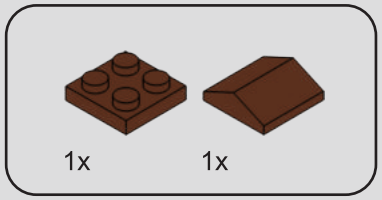

173

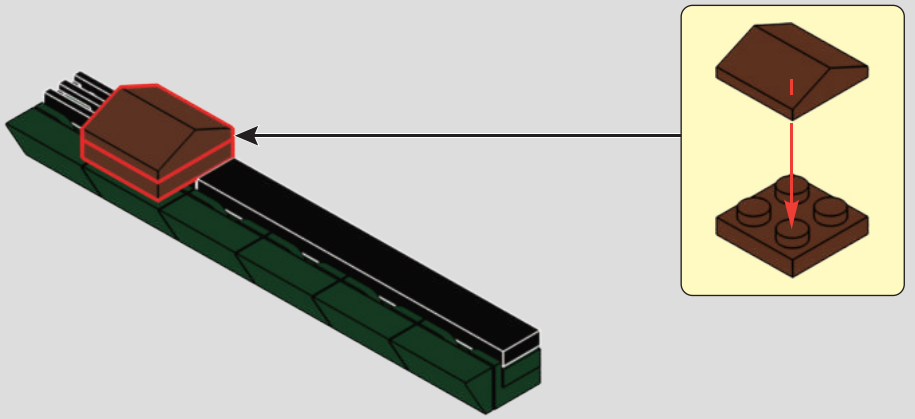

174

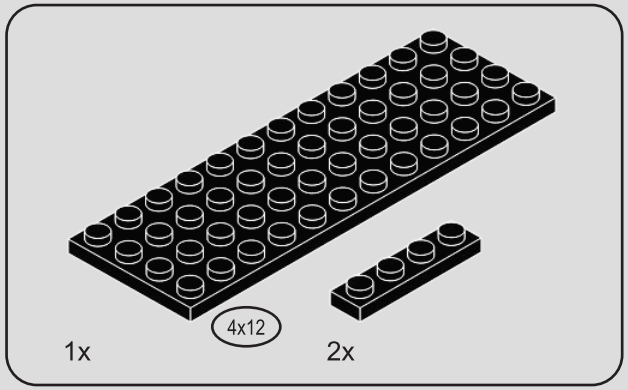

175

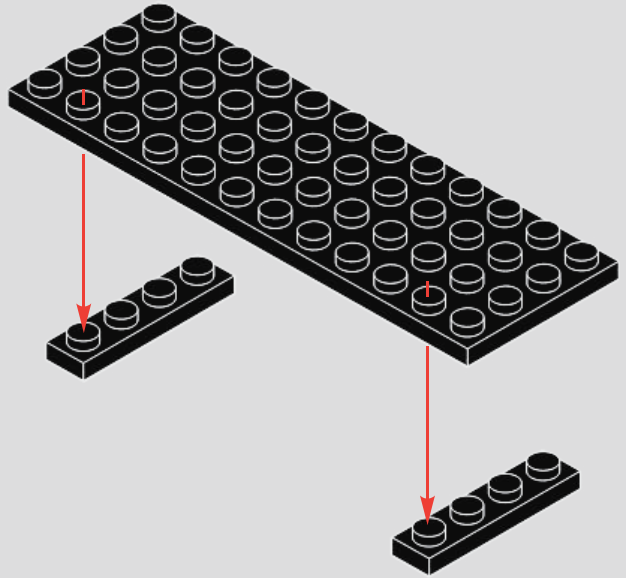

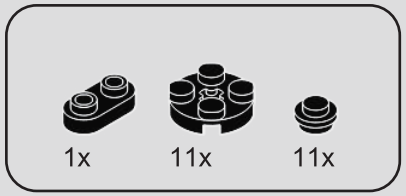

176

1

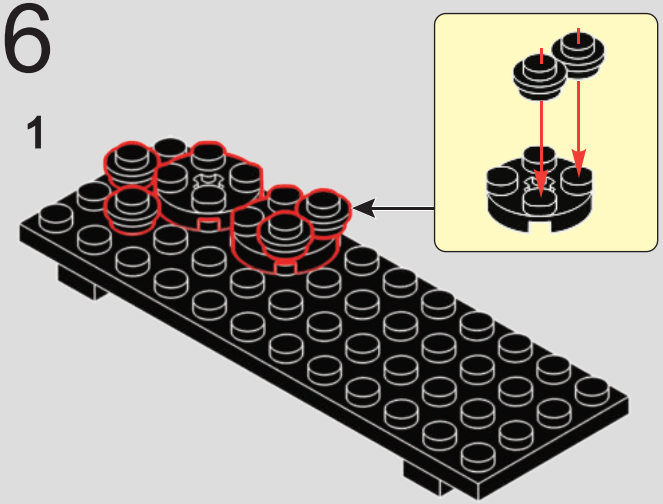

2

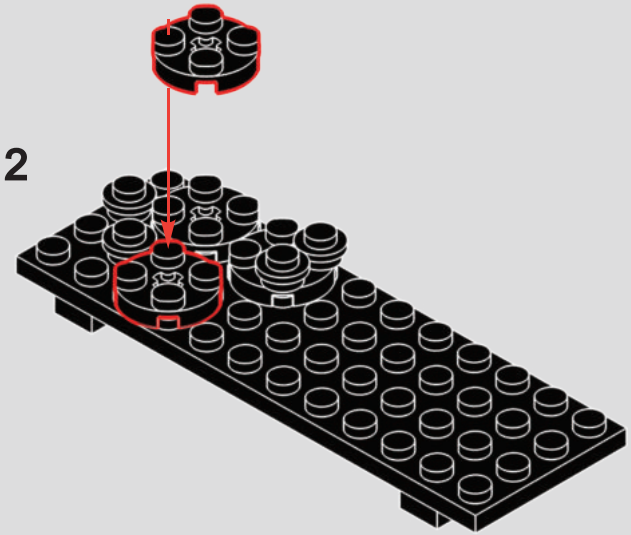

3

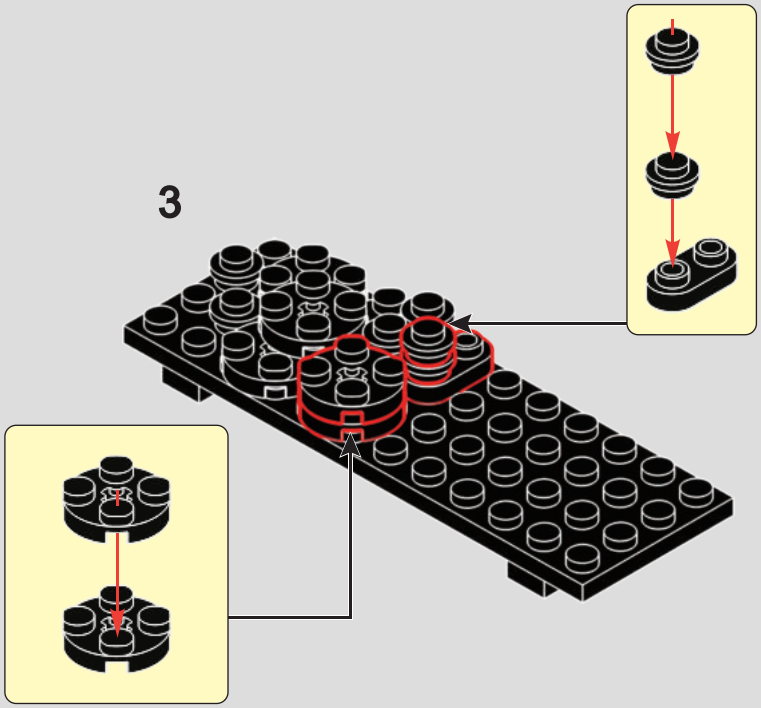

4

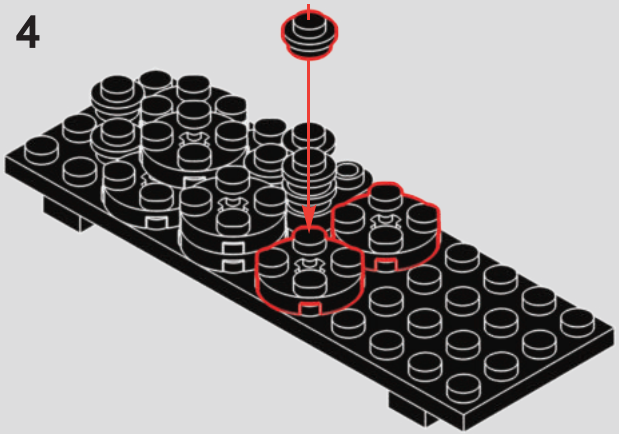

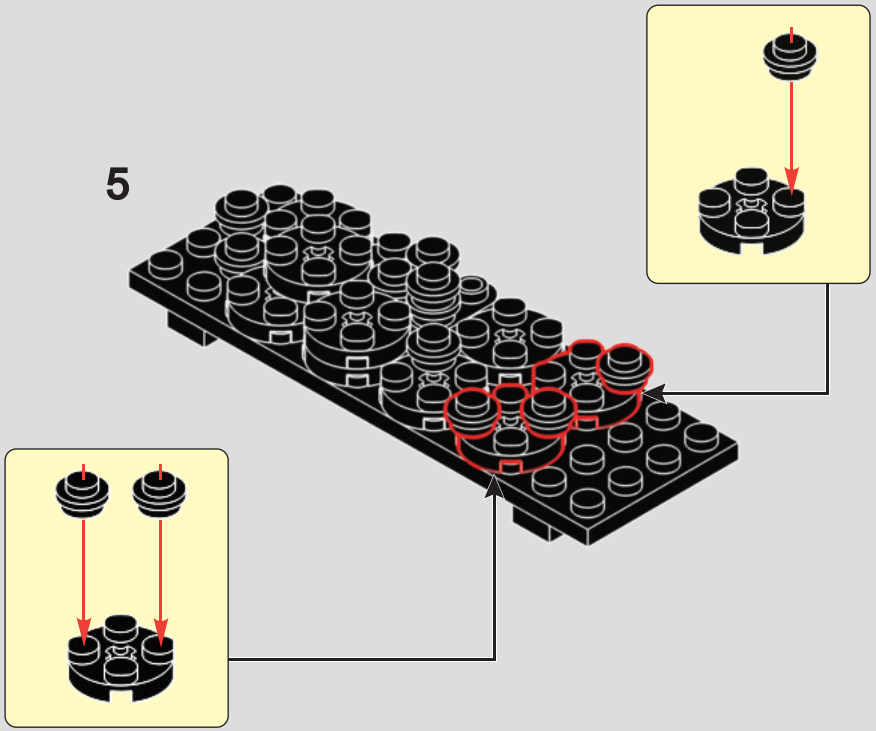

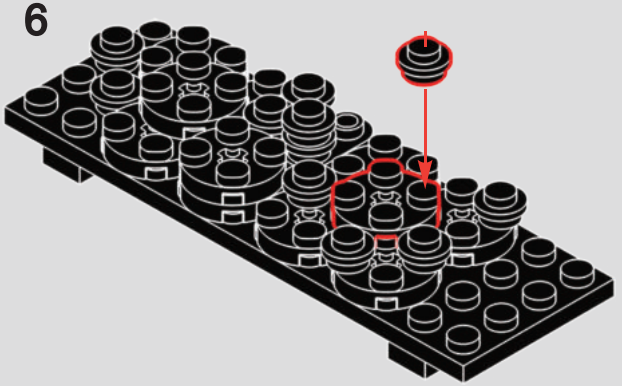

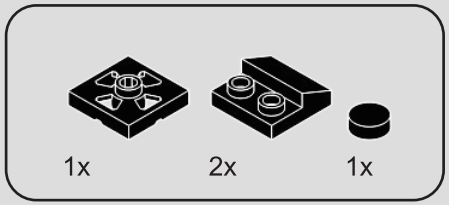

177

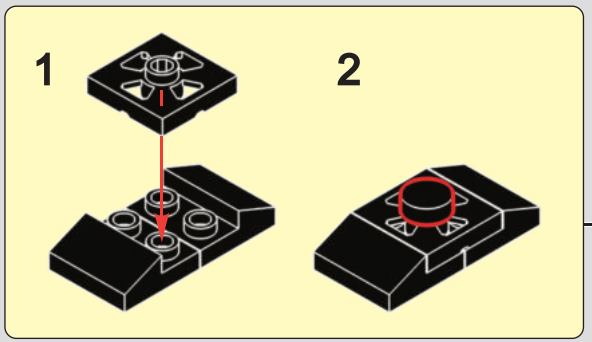

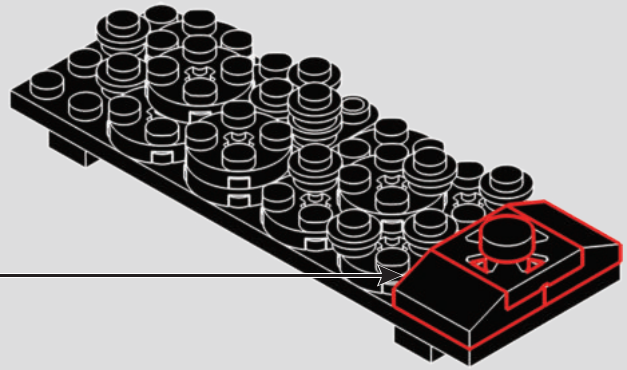

178

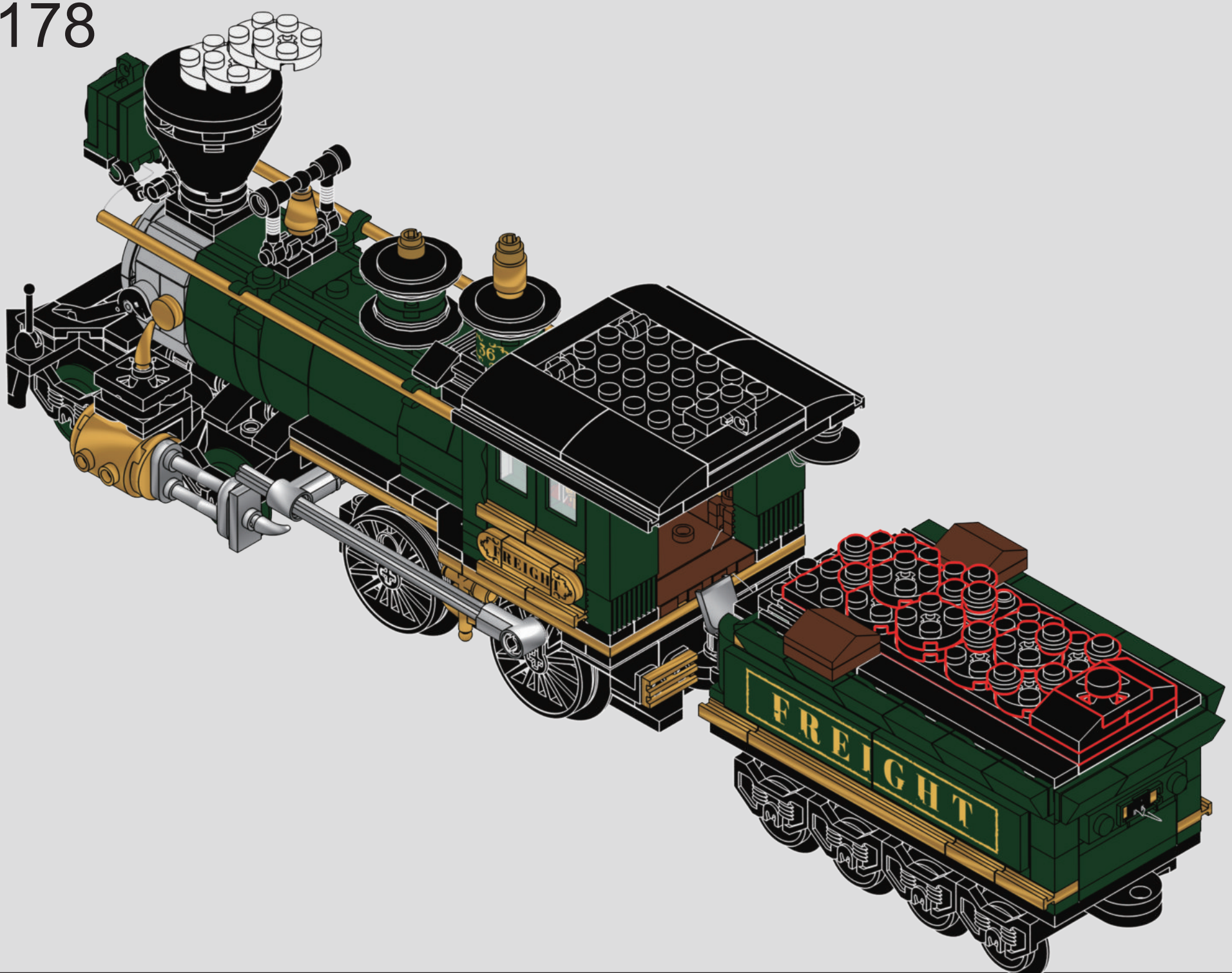

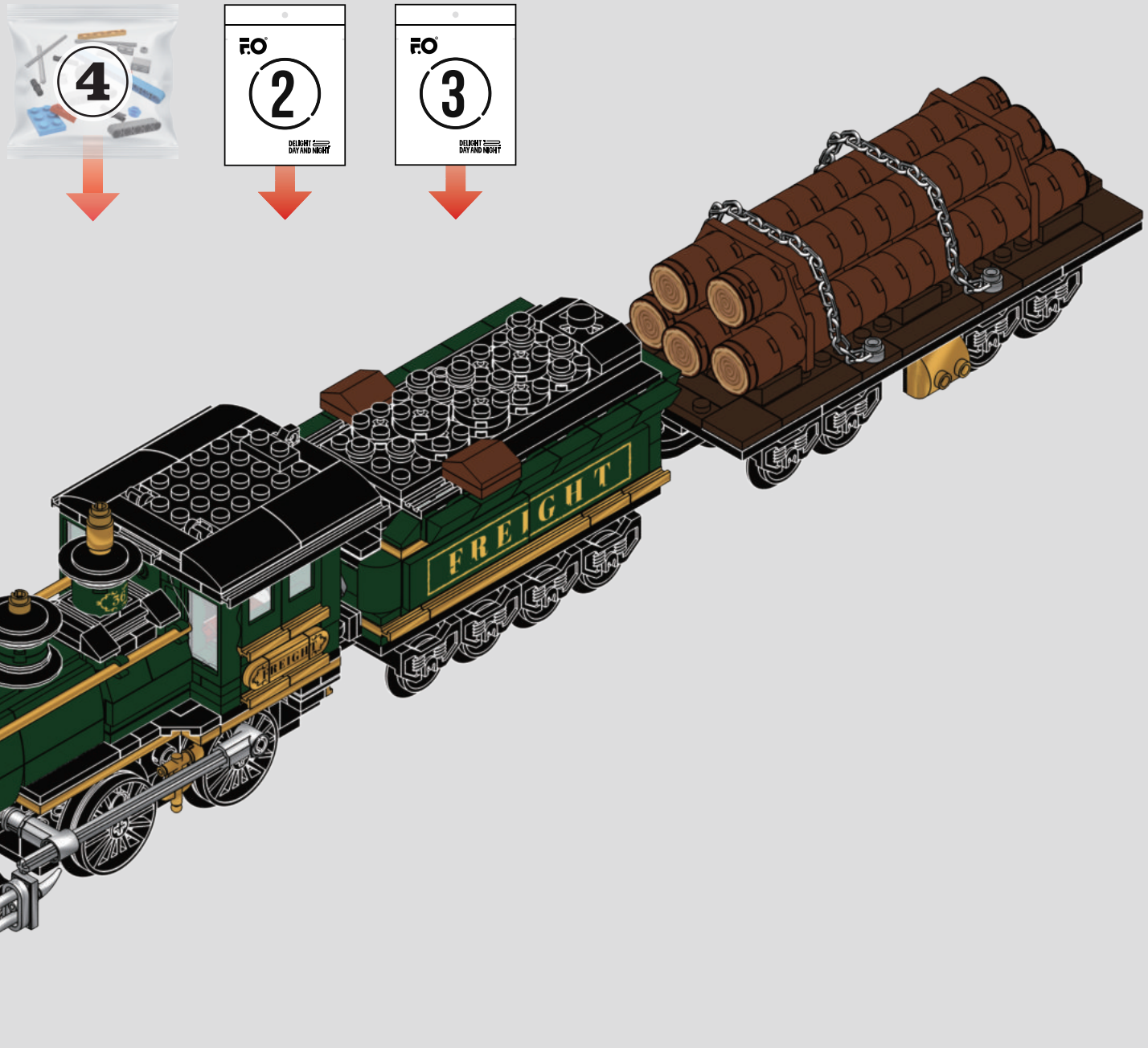
4
2
3
FREIGHT

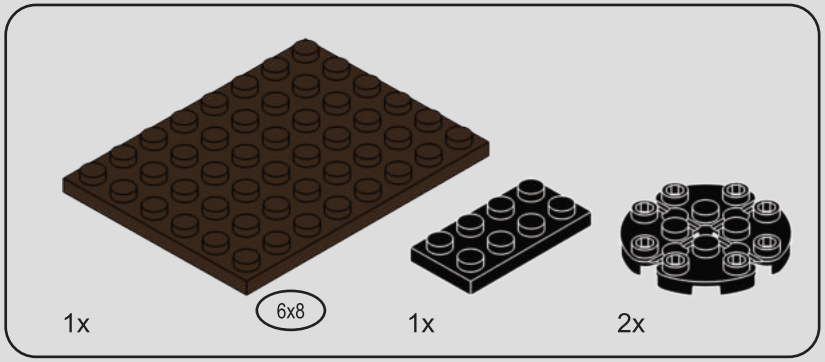

179

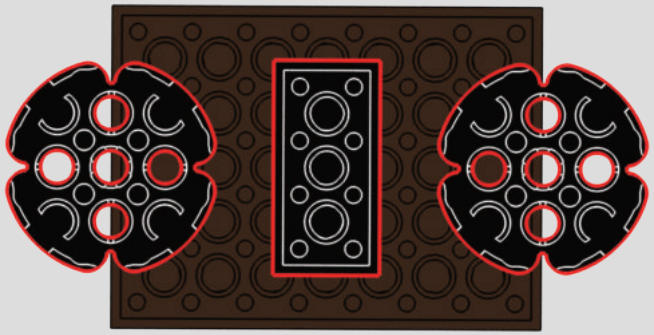

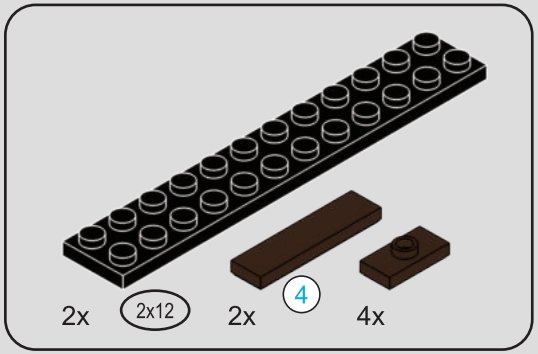

180

1

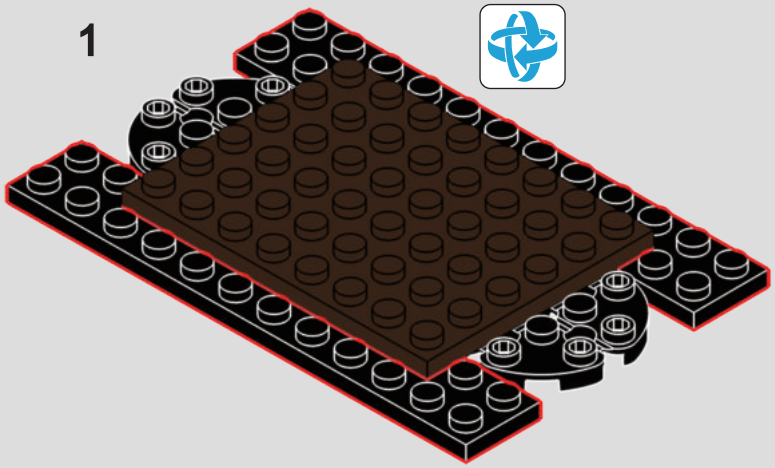

2

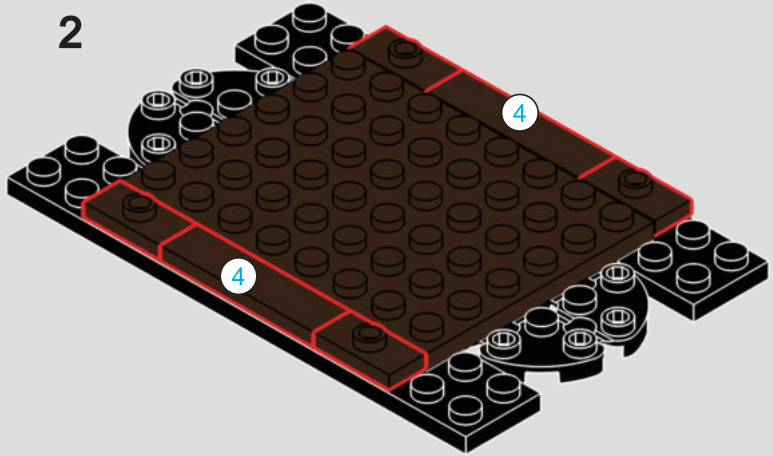

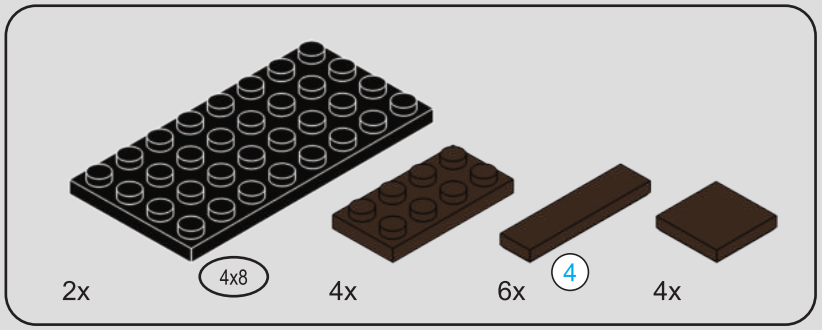

181

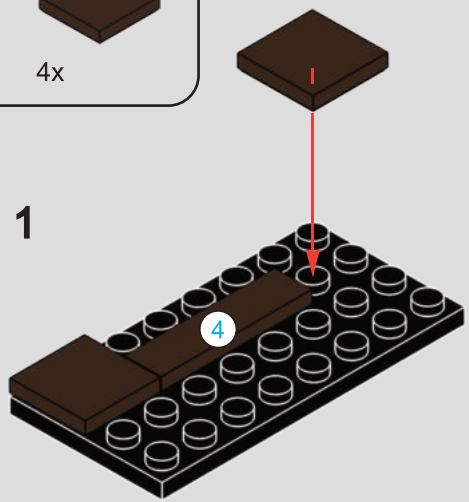

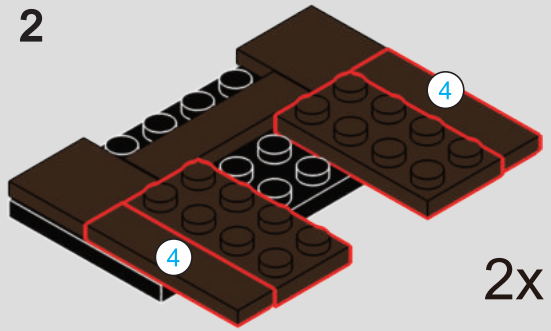

182

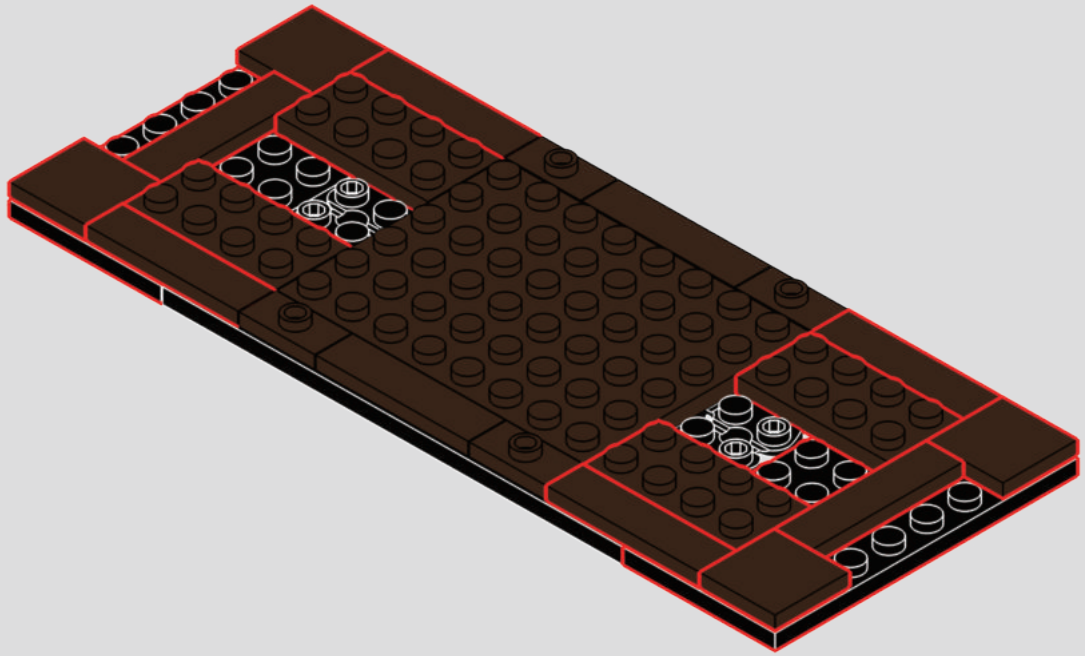

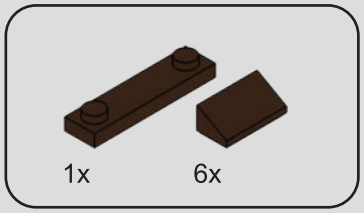

183

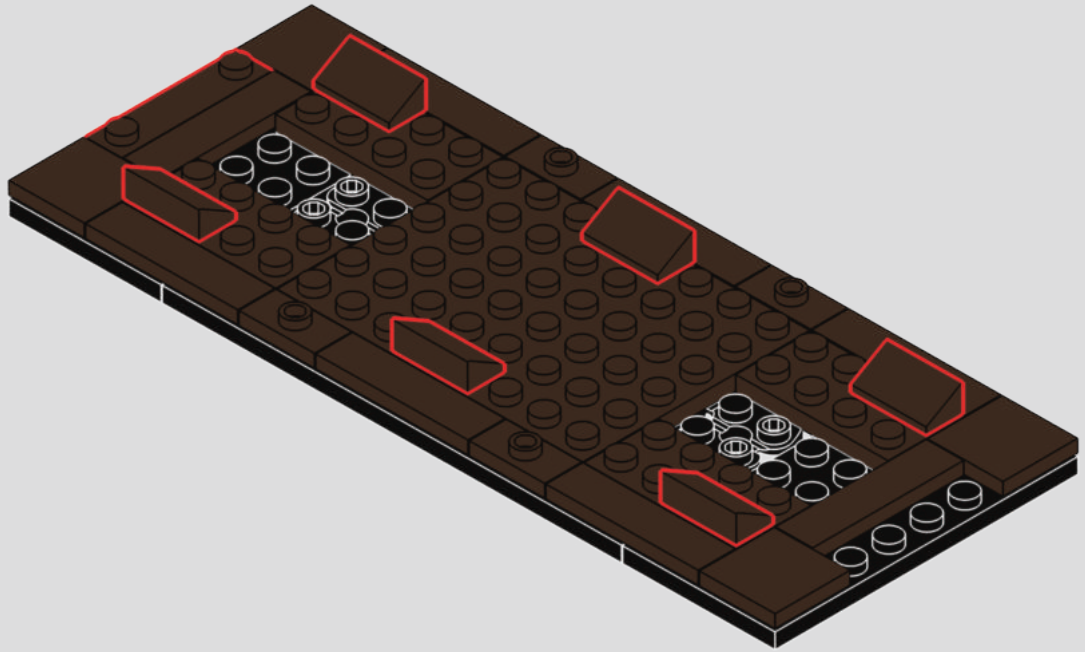

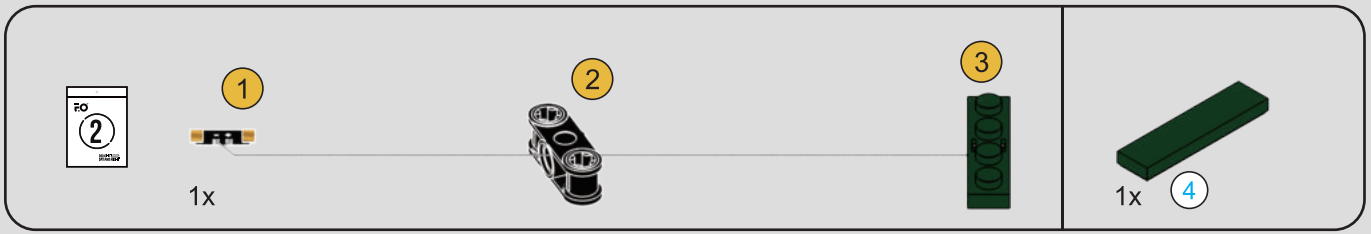

184

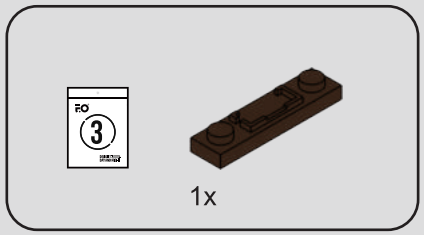

185

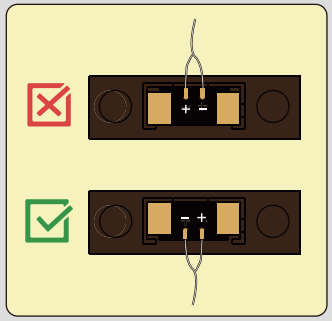

186

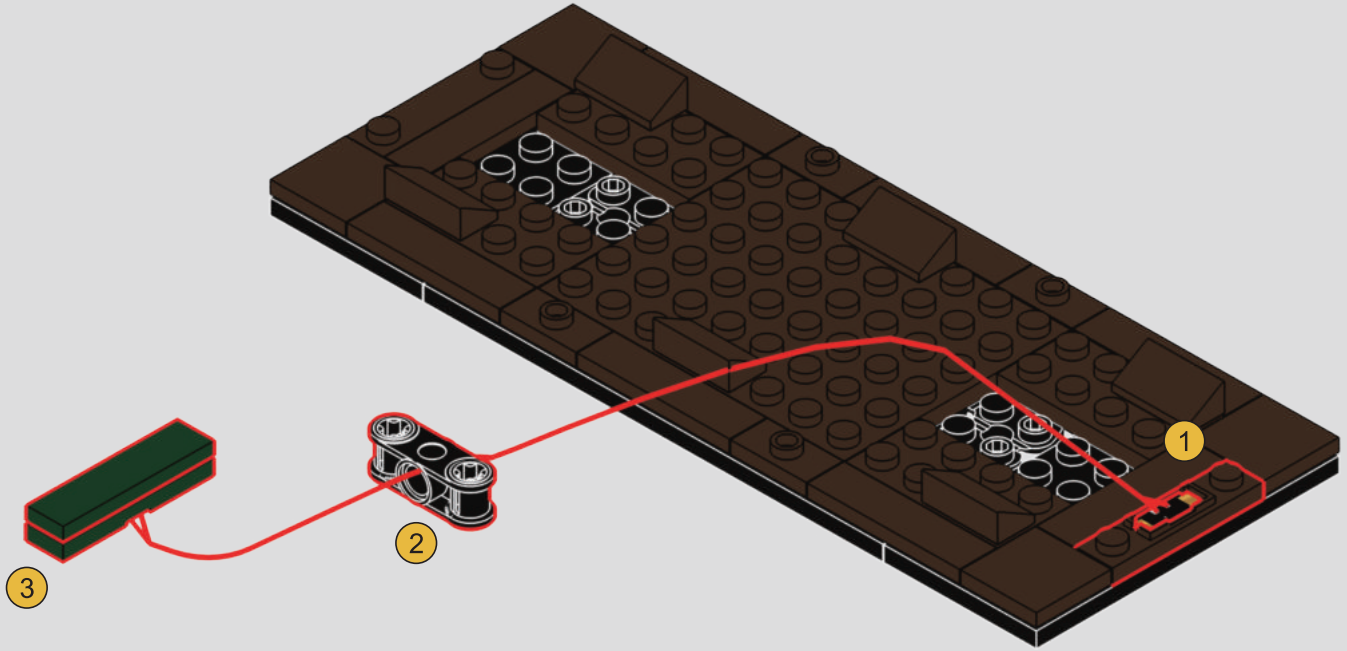

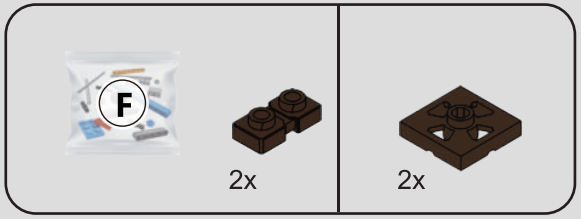

187

1

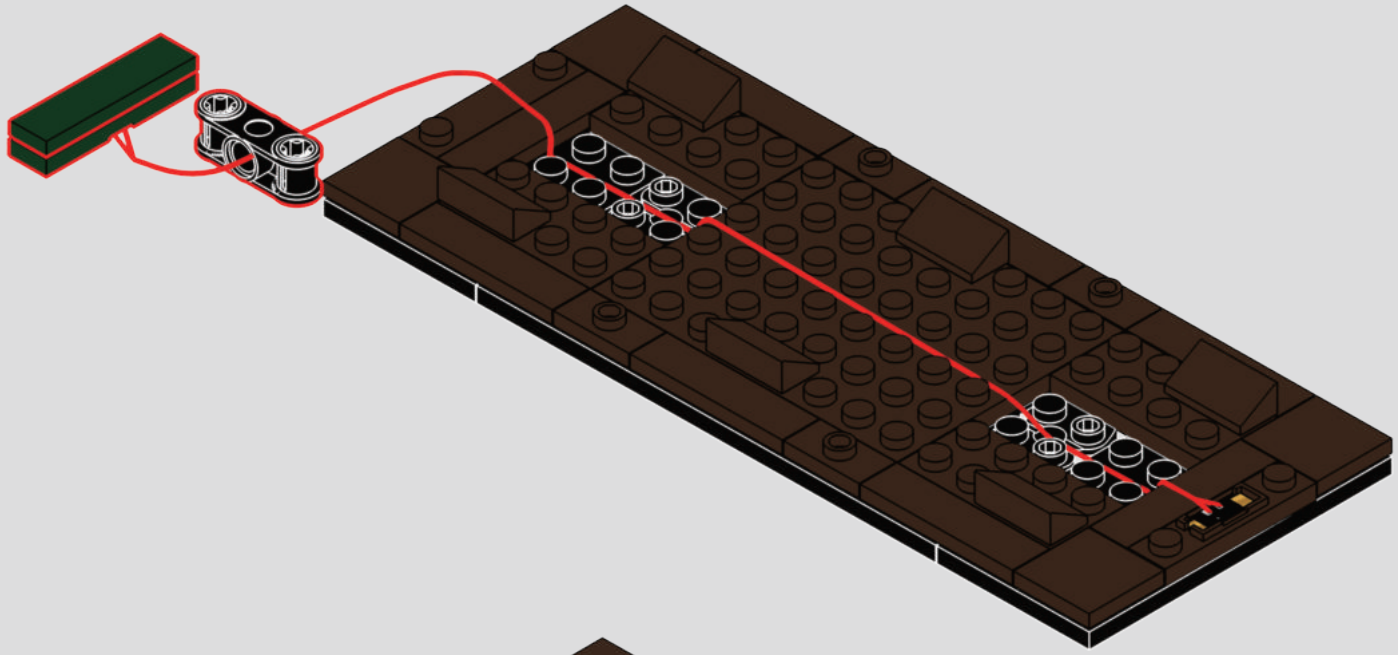

2

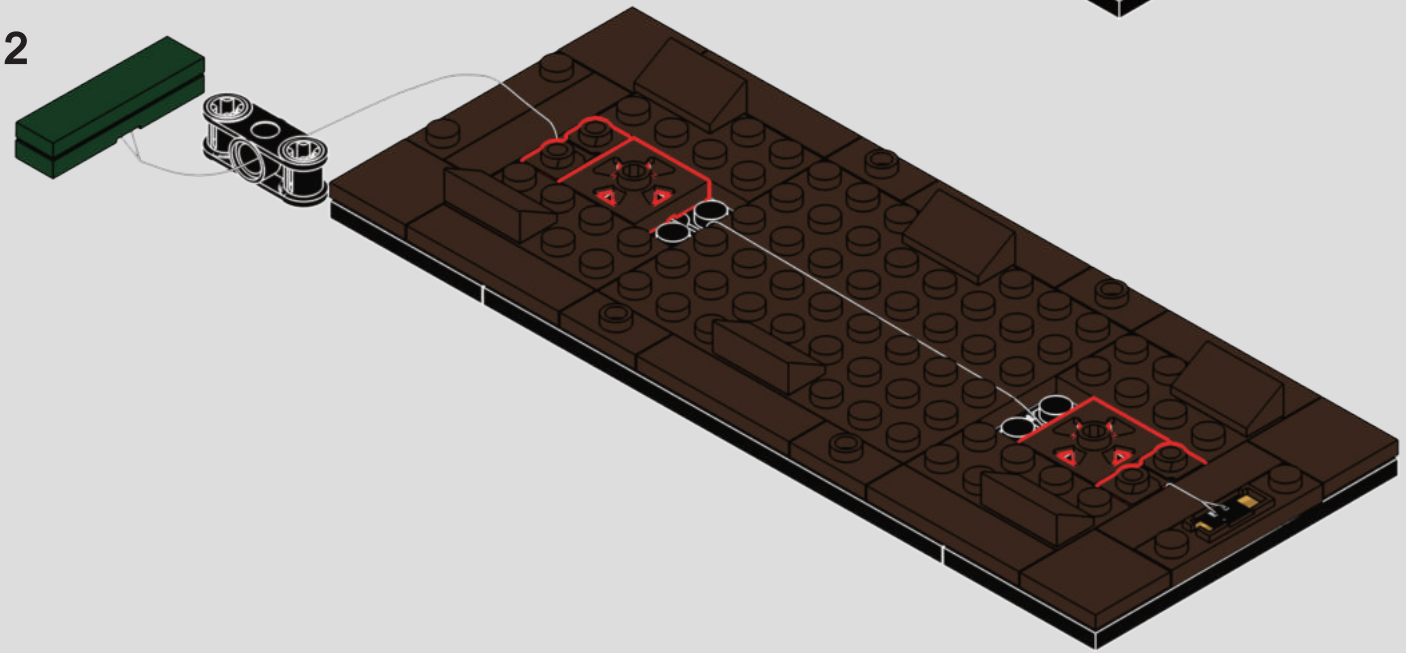

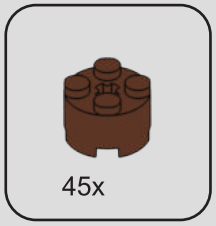

188

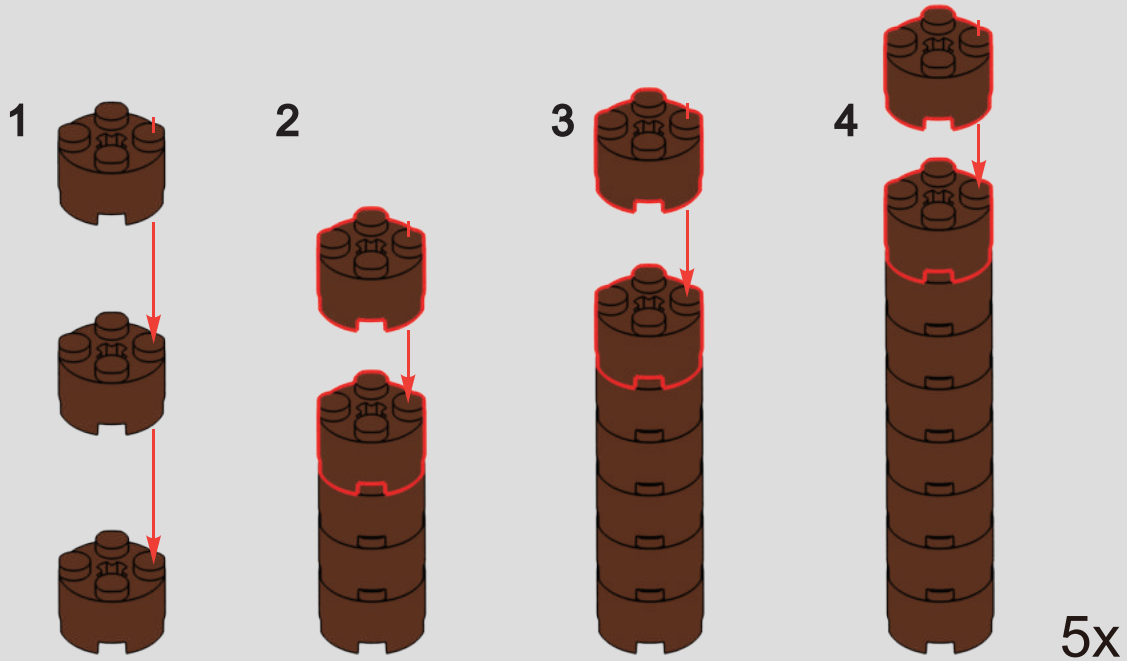

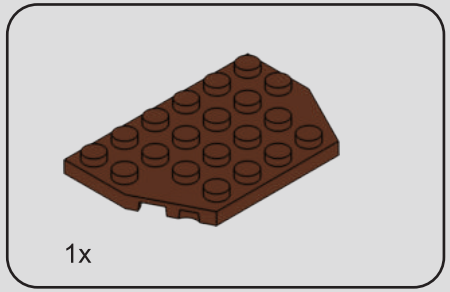

189

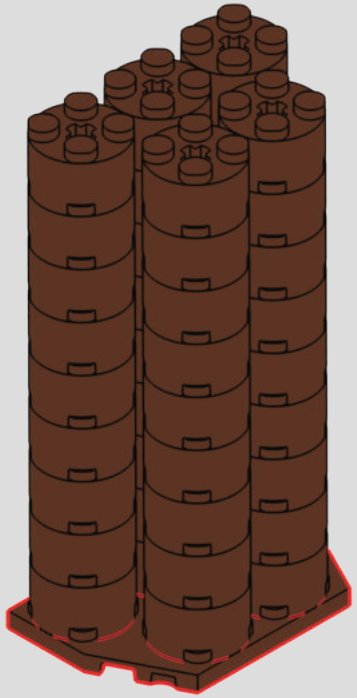

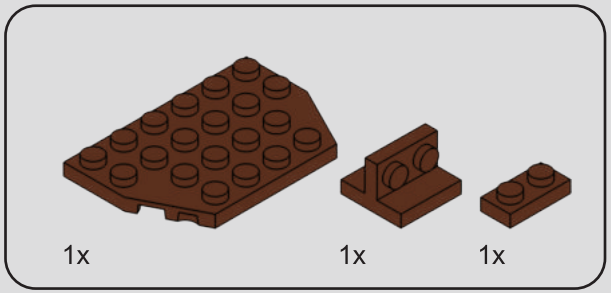

190

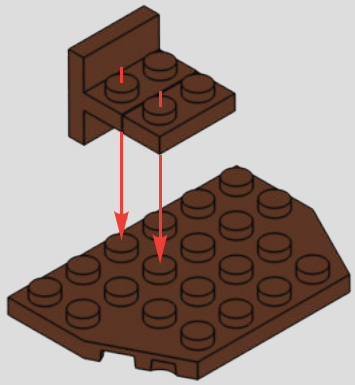

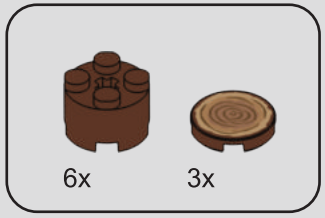

191

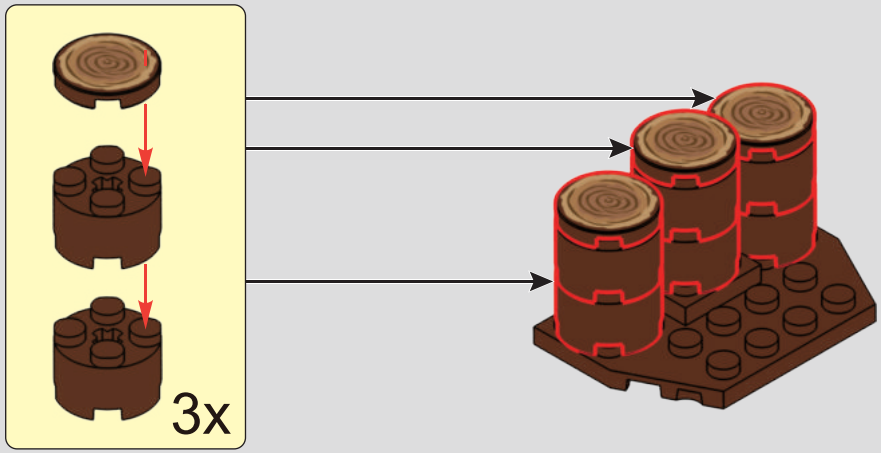

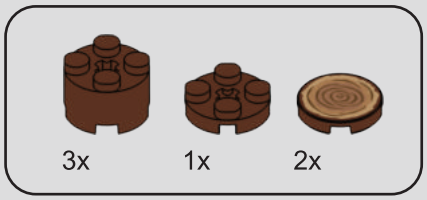

192

193

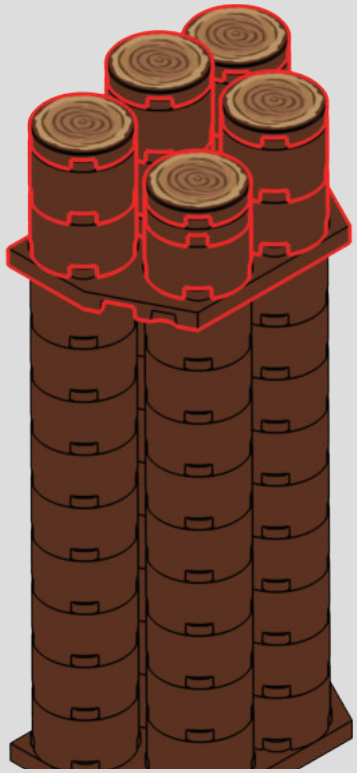

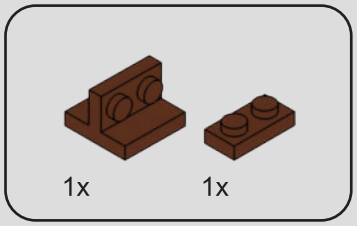

194

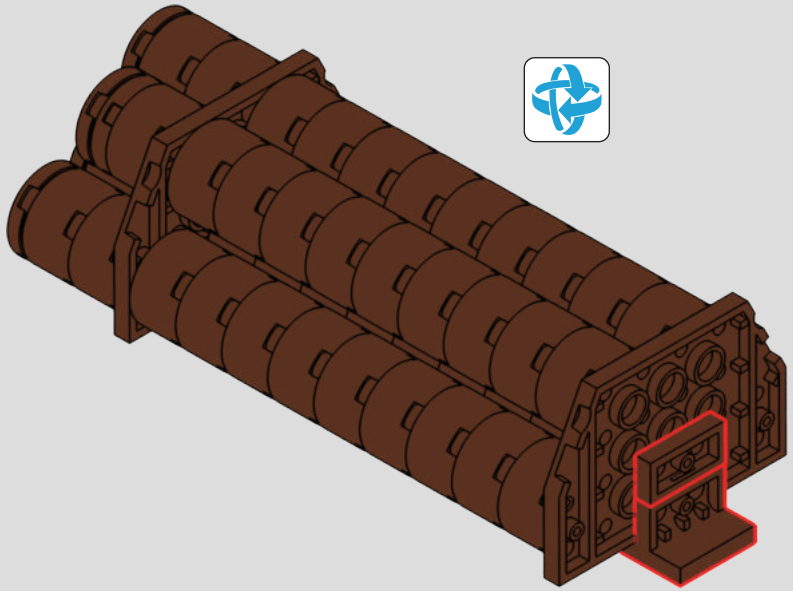

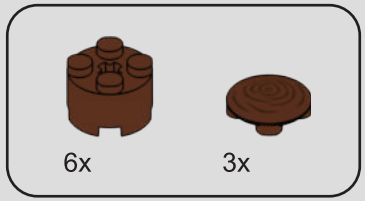

195

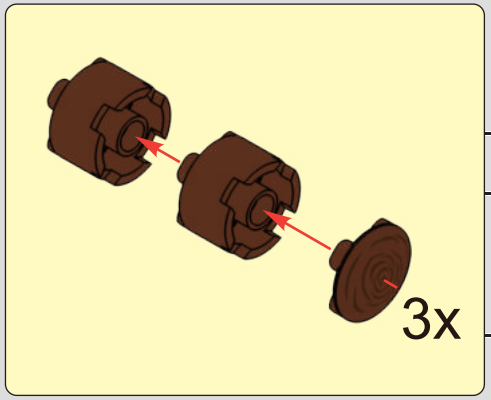

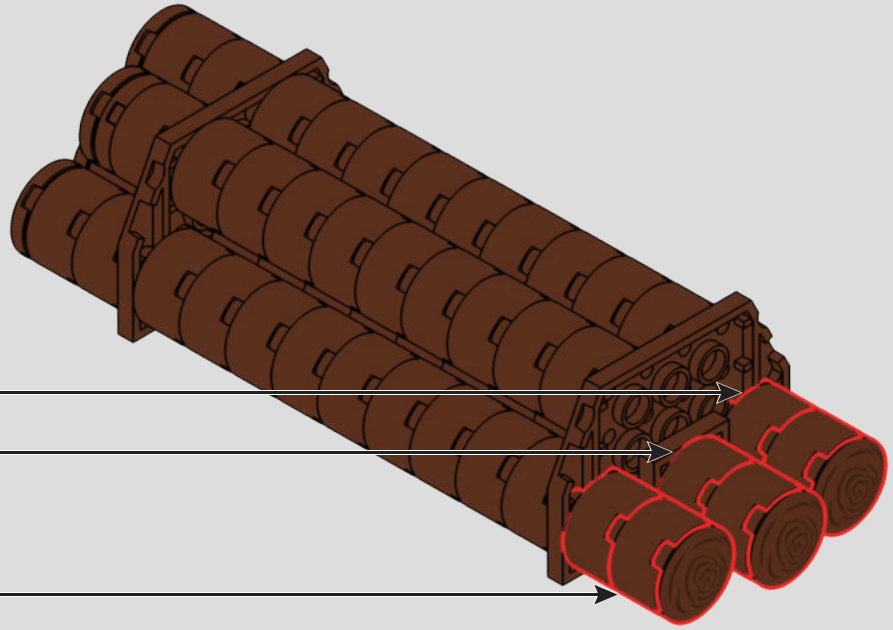

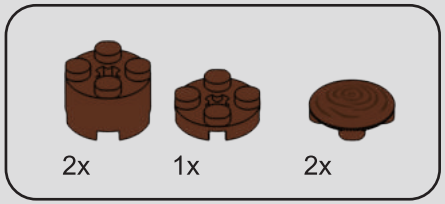

196

1

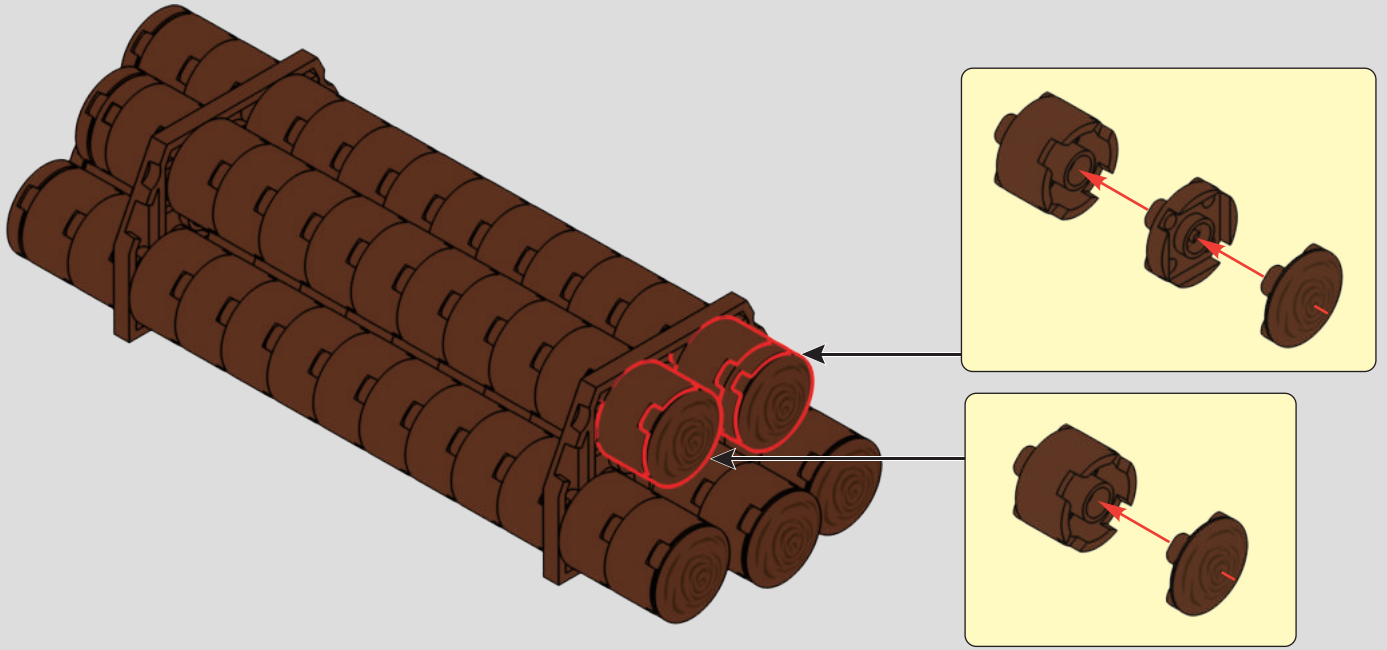

2

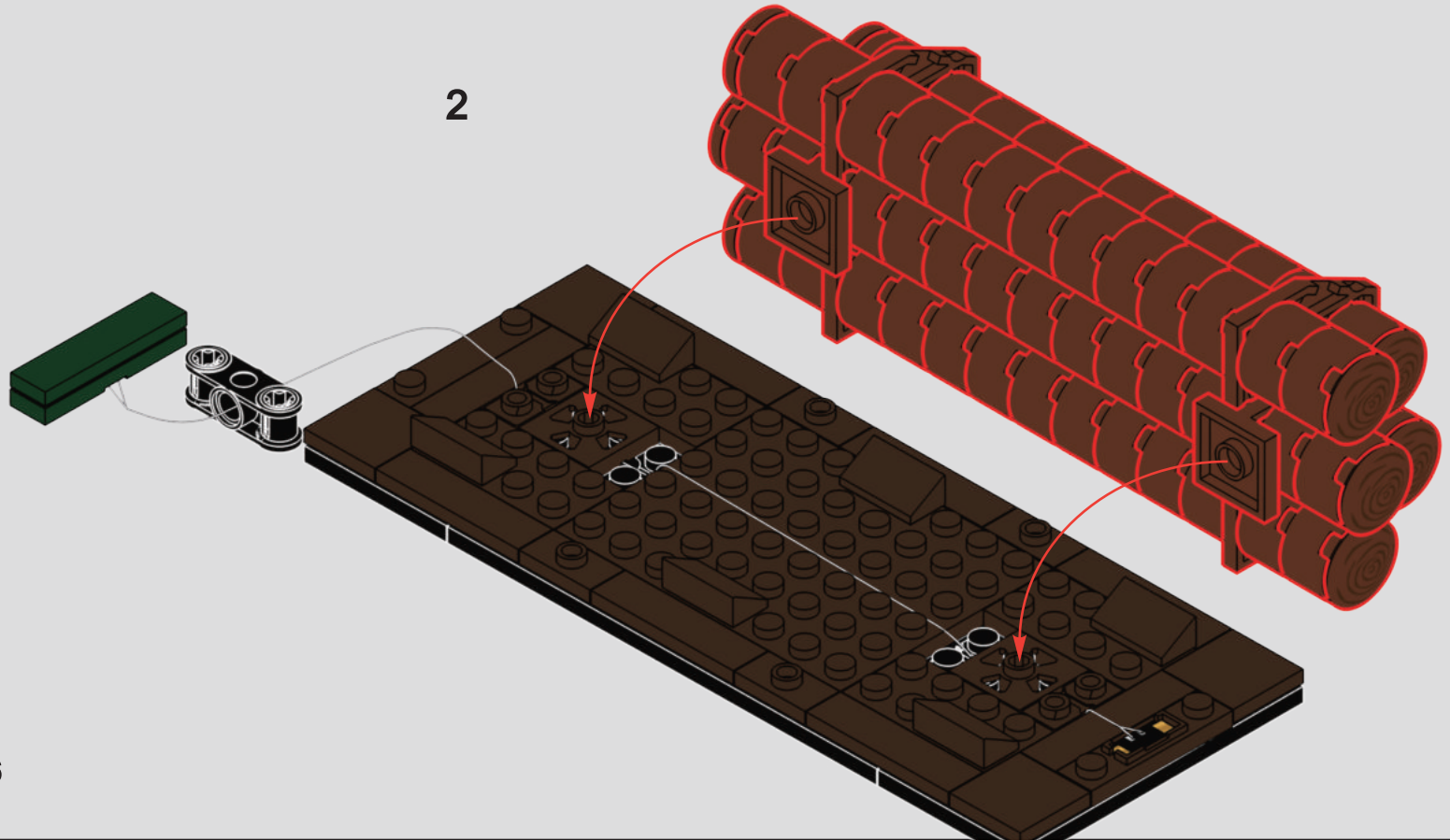

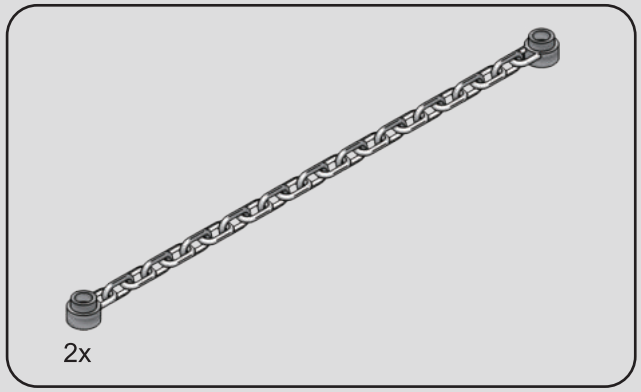

197

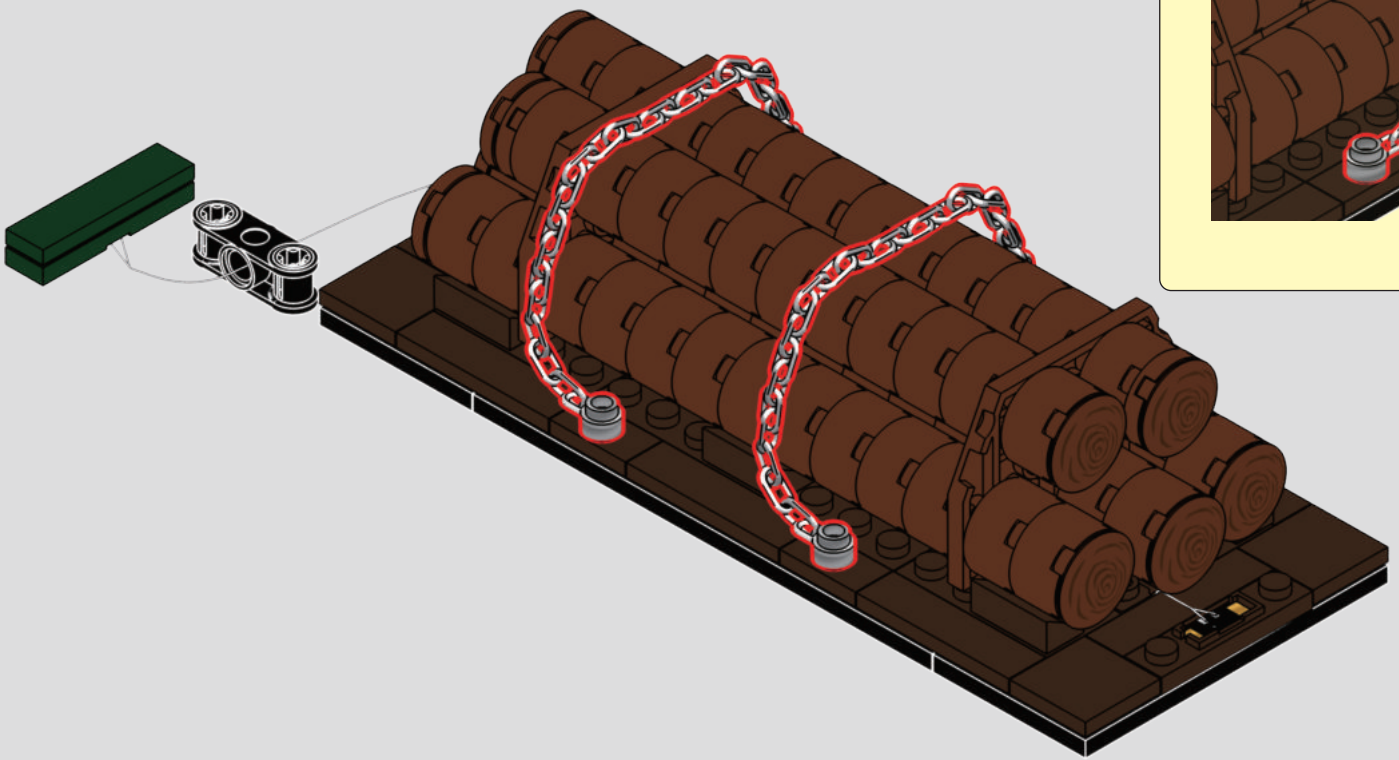

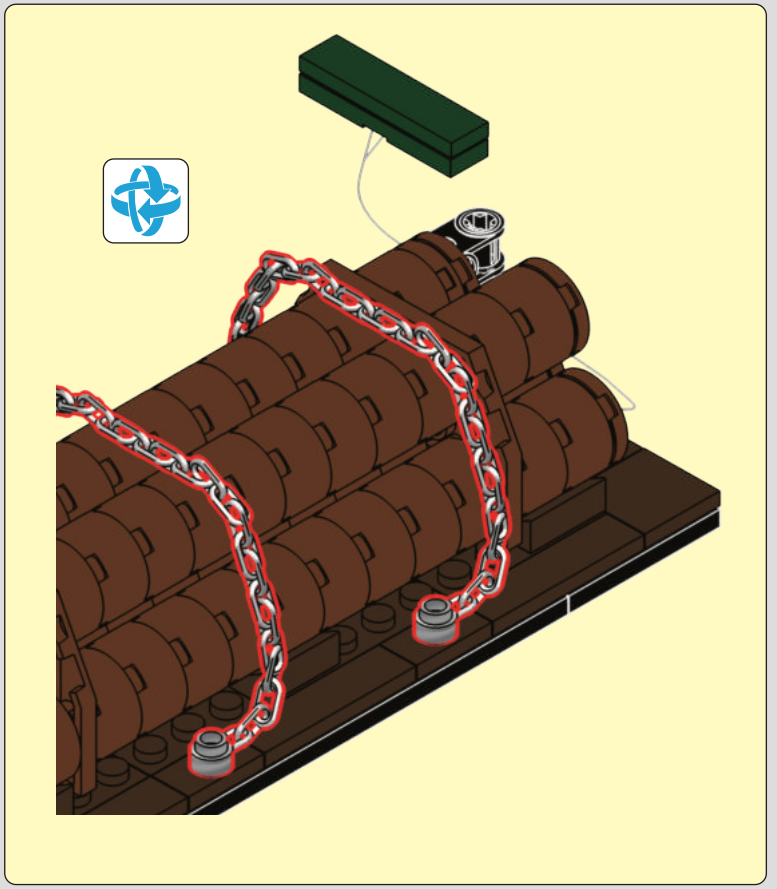

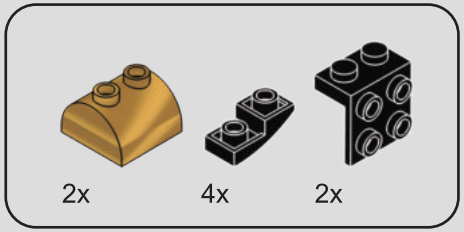

198

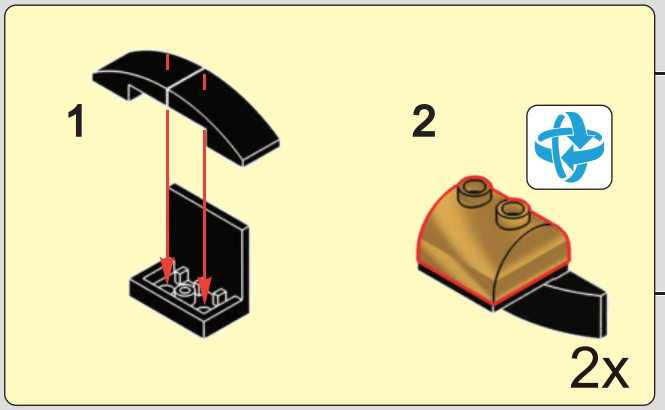

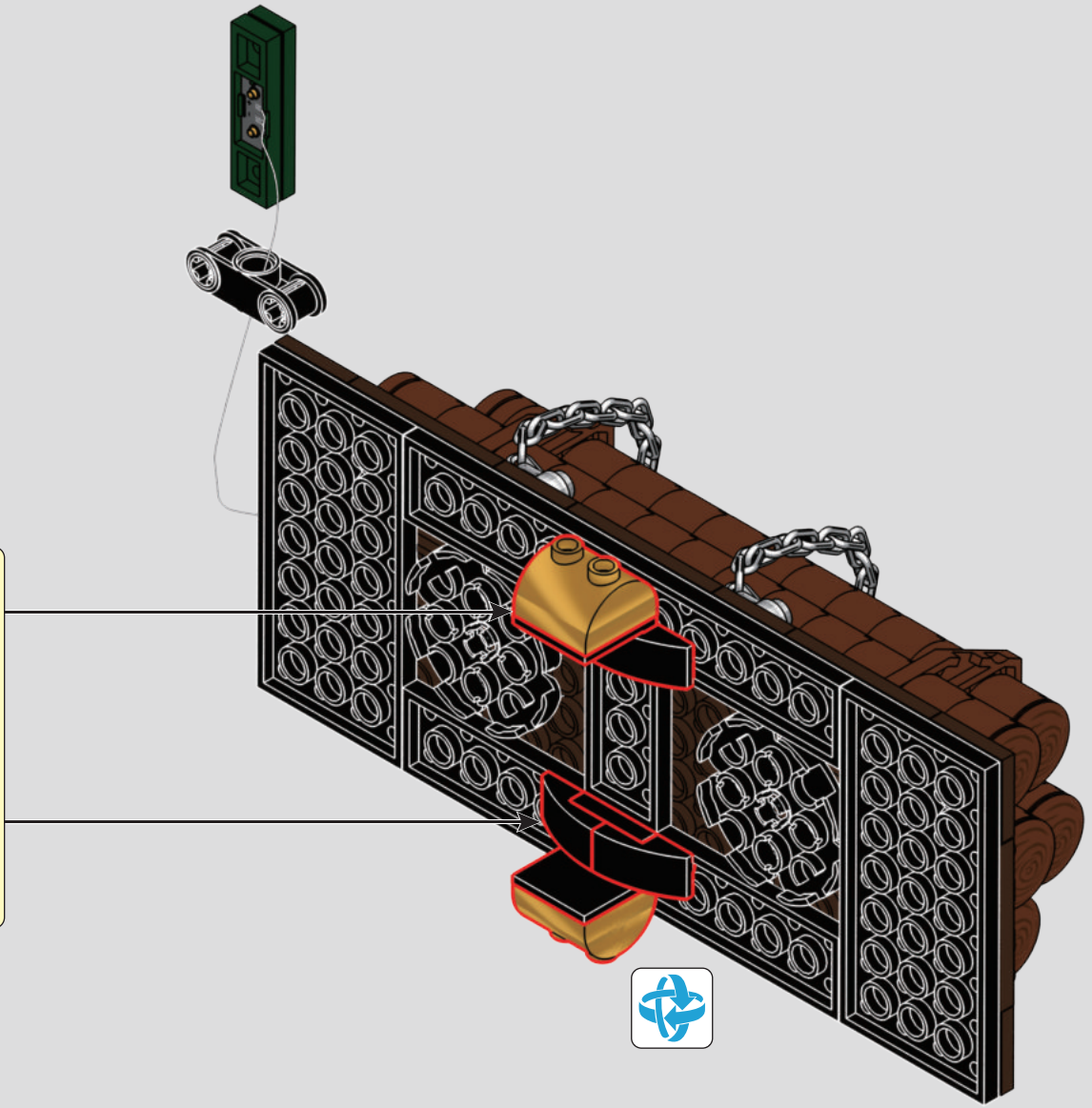

199-202

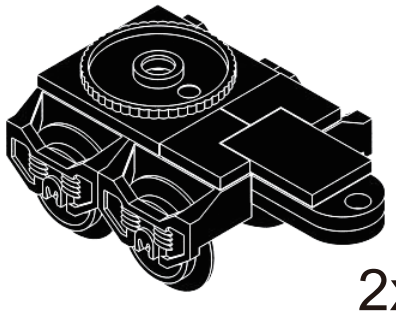

2x

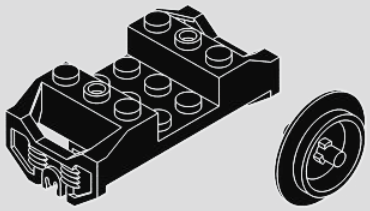

4x 8x

199

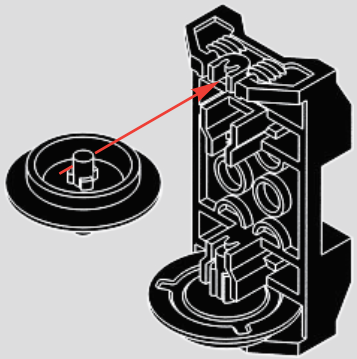

2x

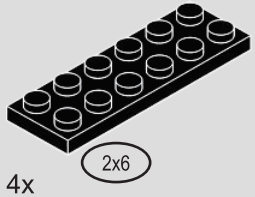

4x

200

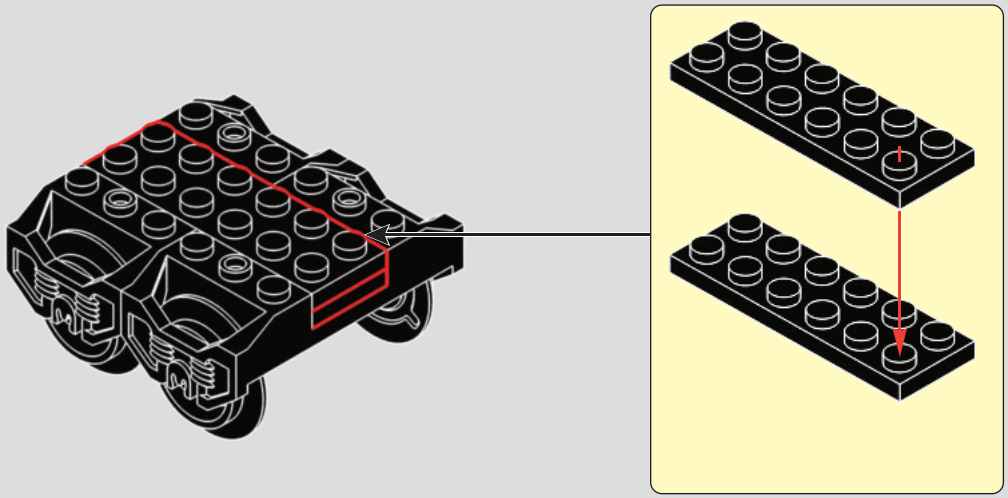

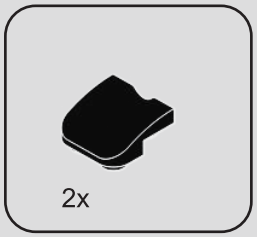

201

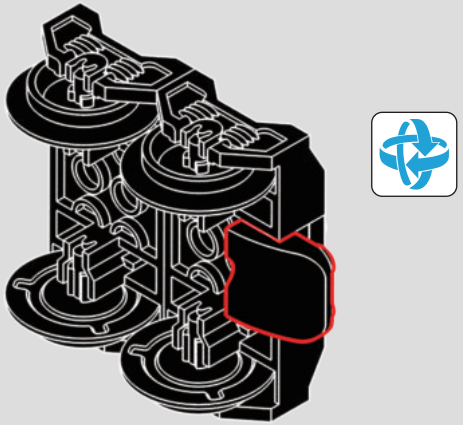

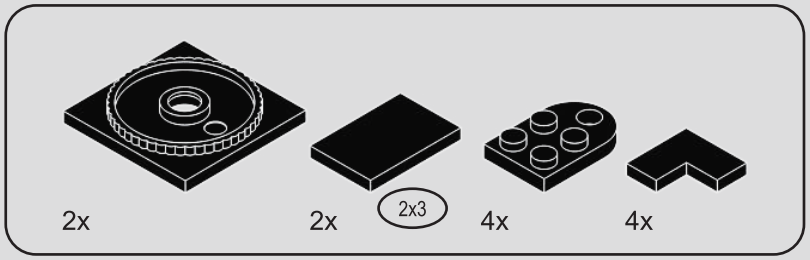

202

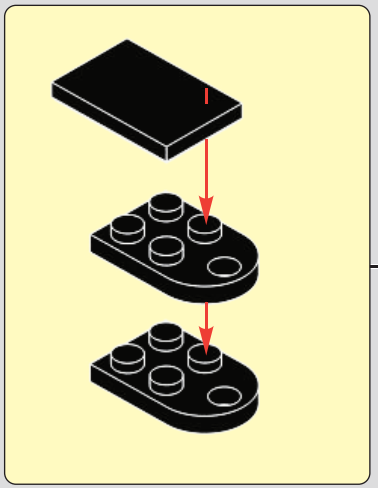

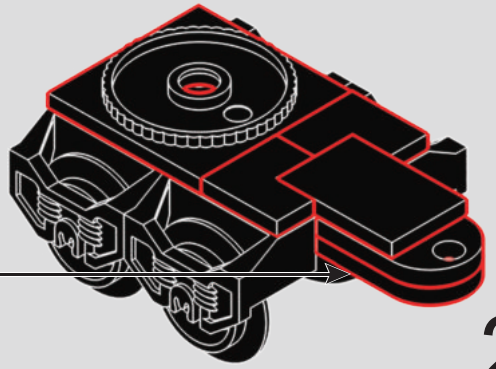

2x

203

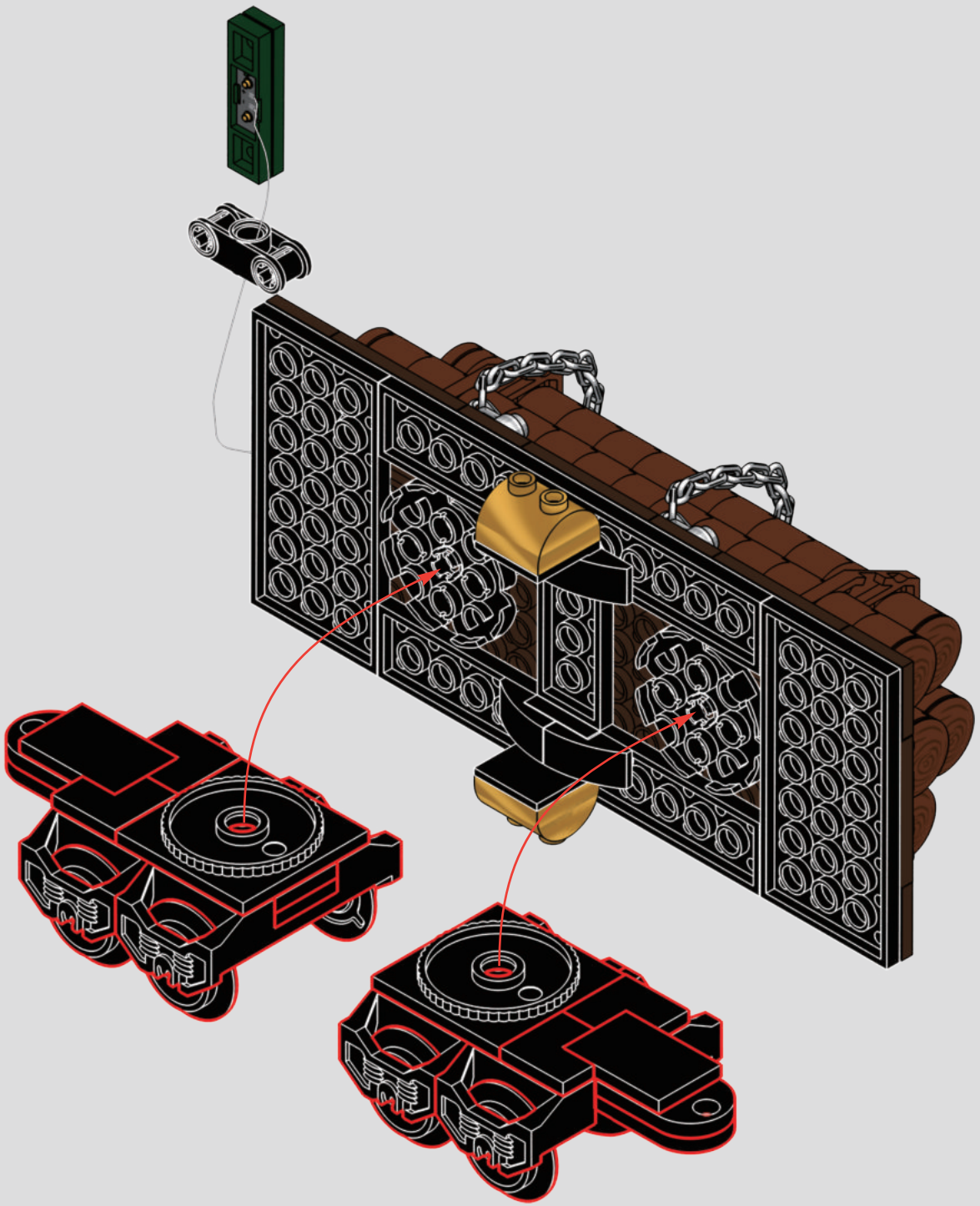

2x

204

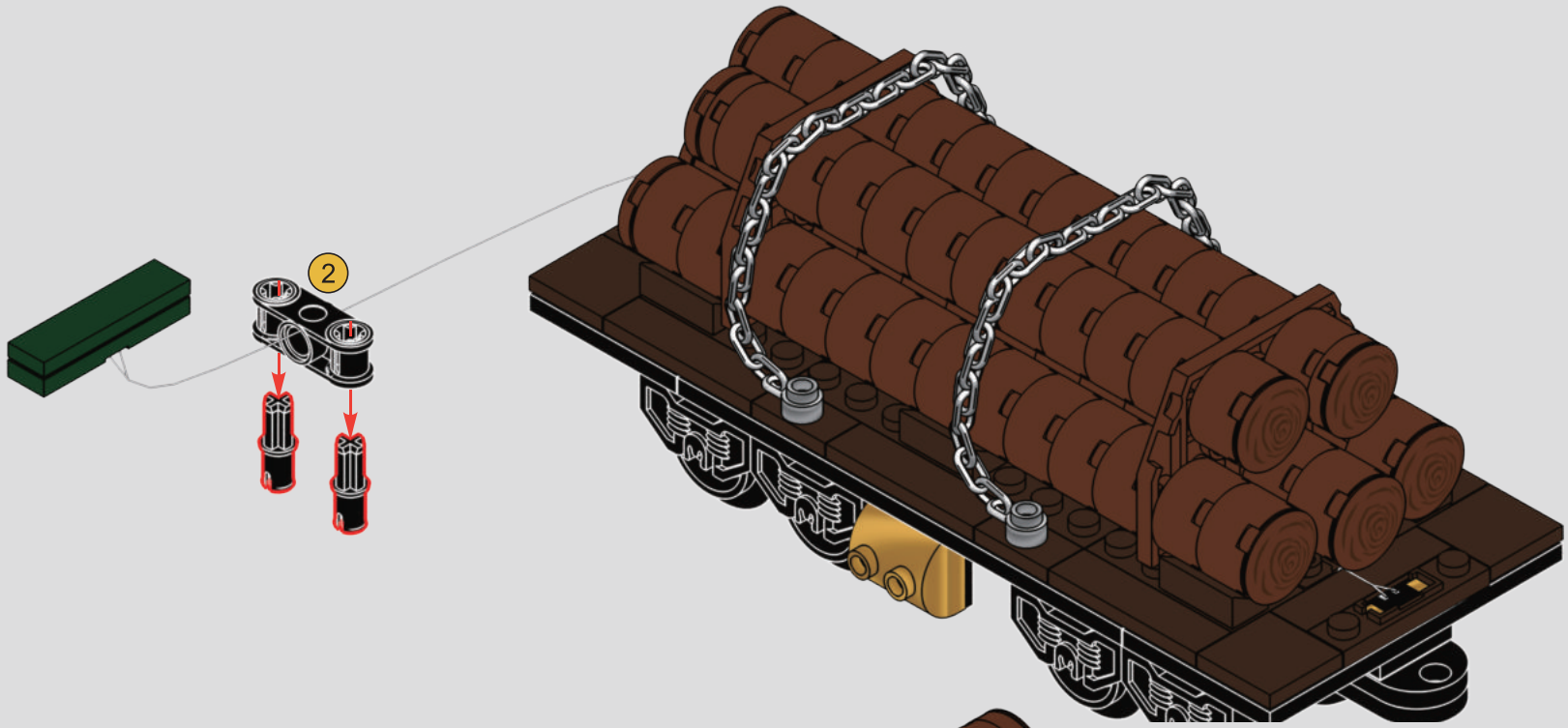

205

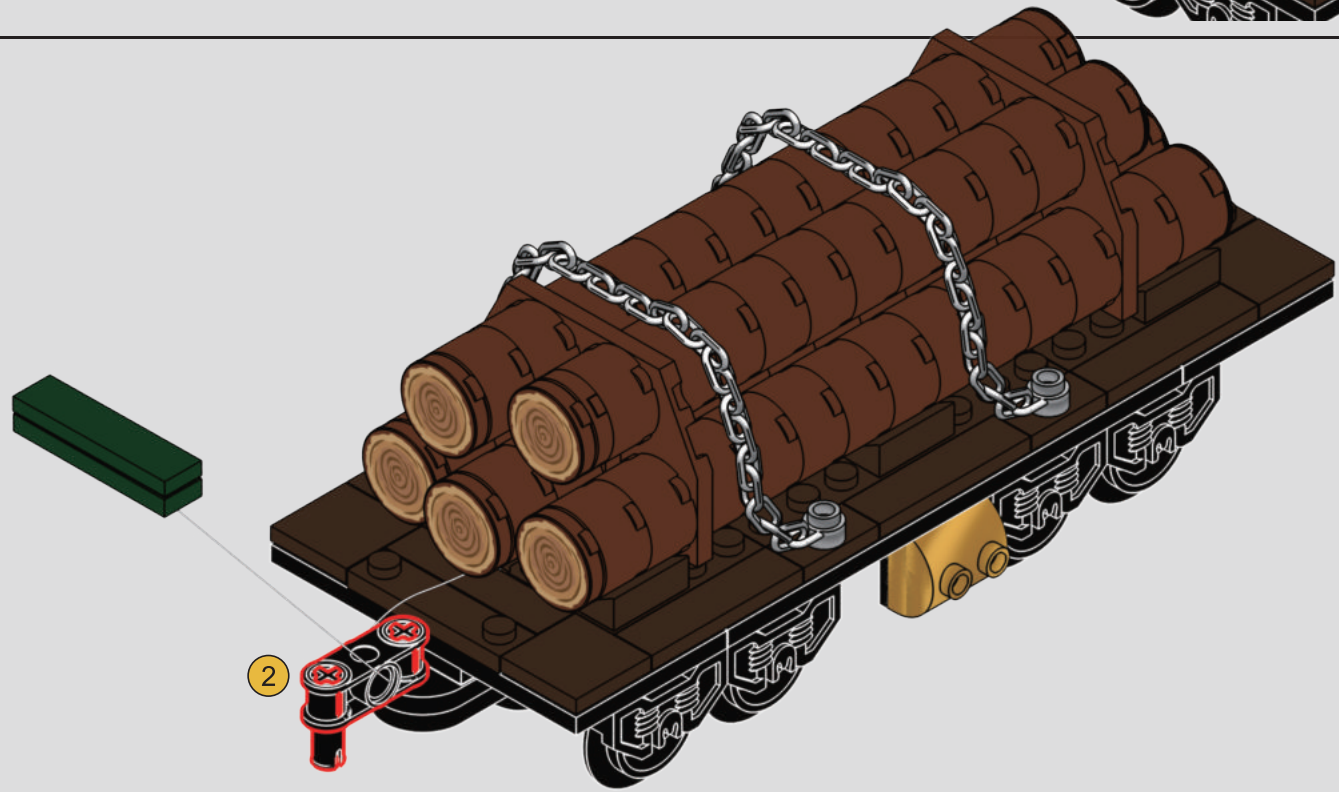

206

1

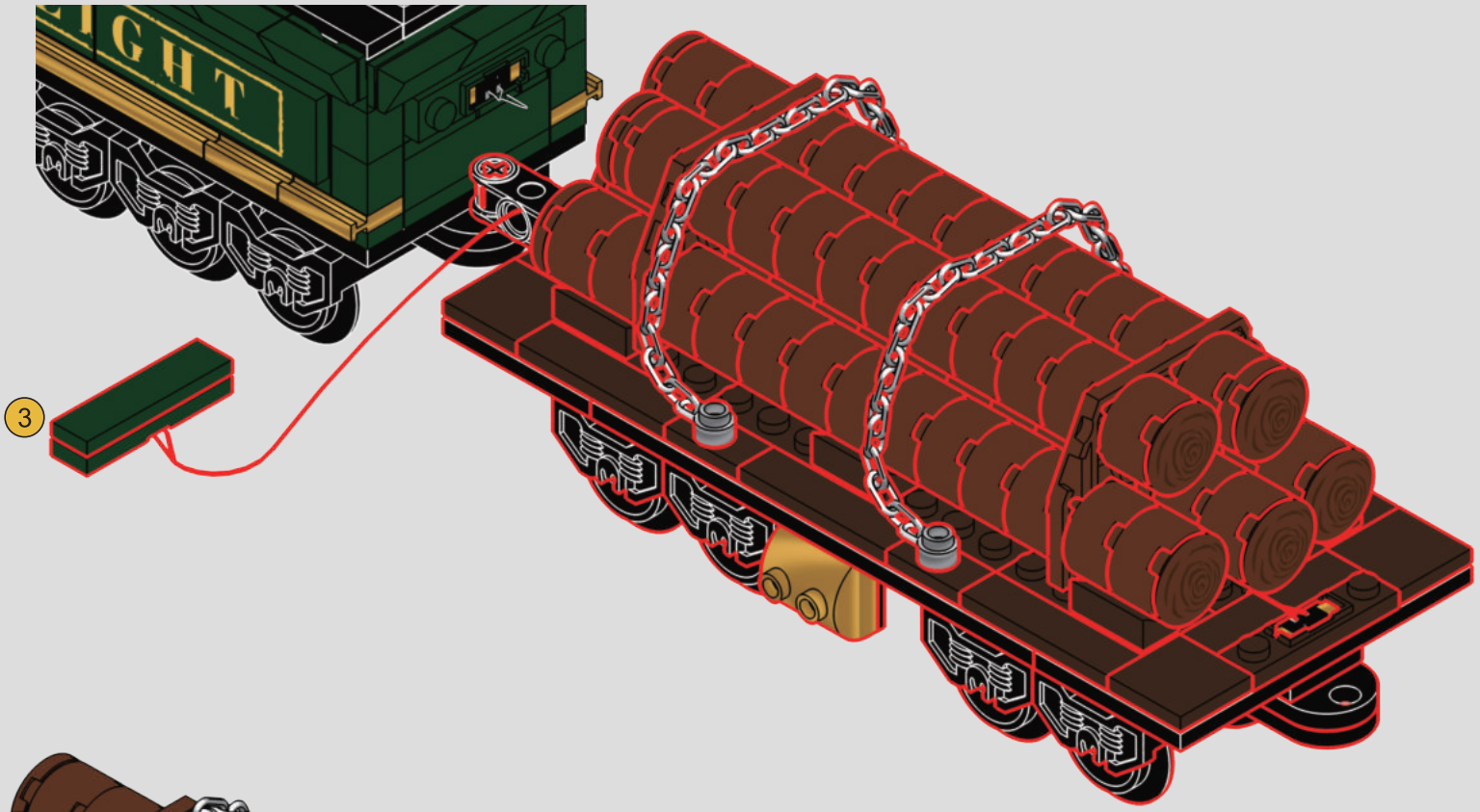

2

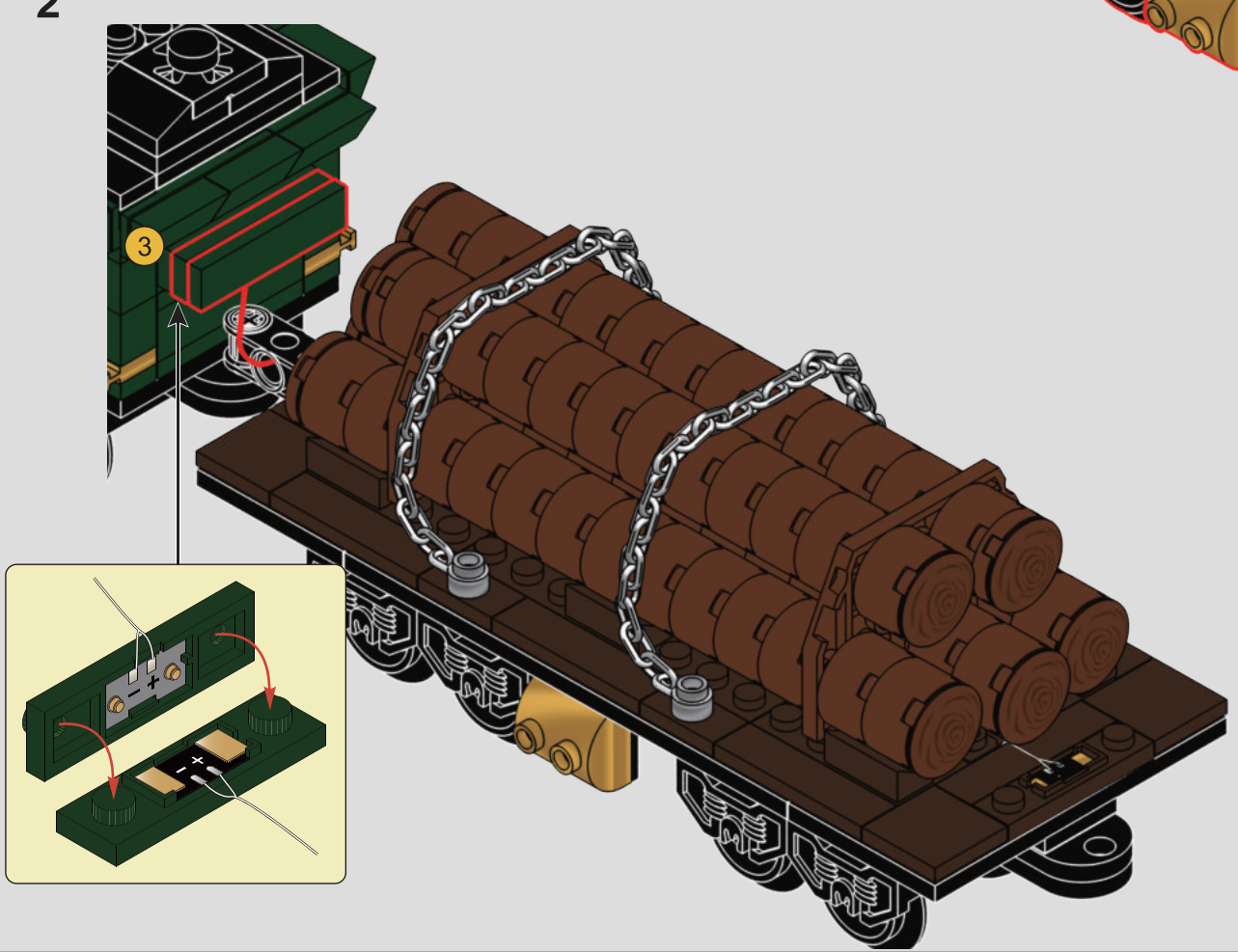

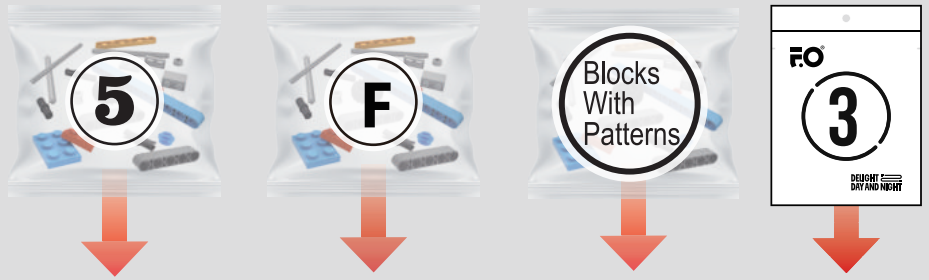
5
F
Blocks
With
Patterns
3

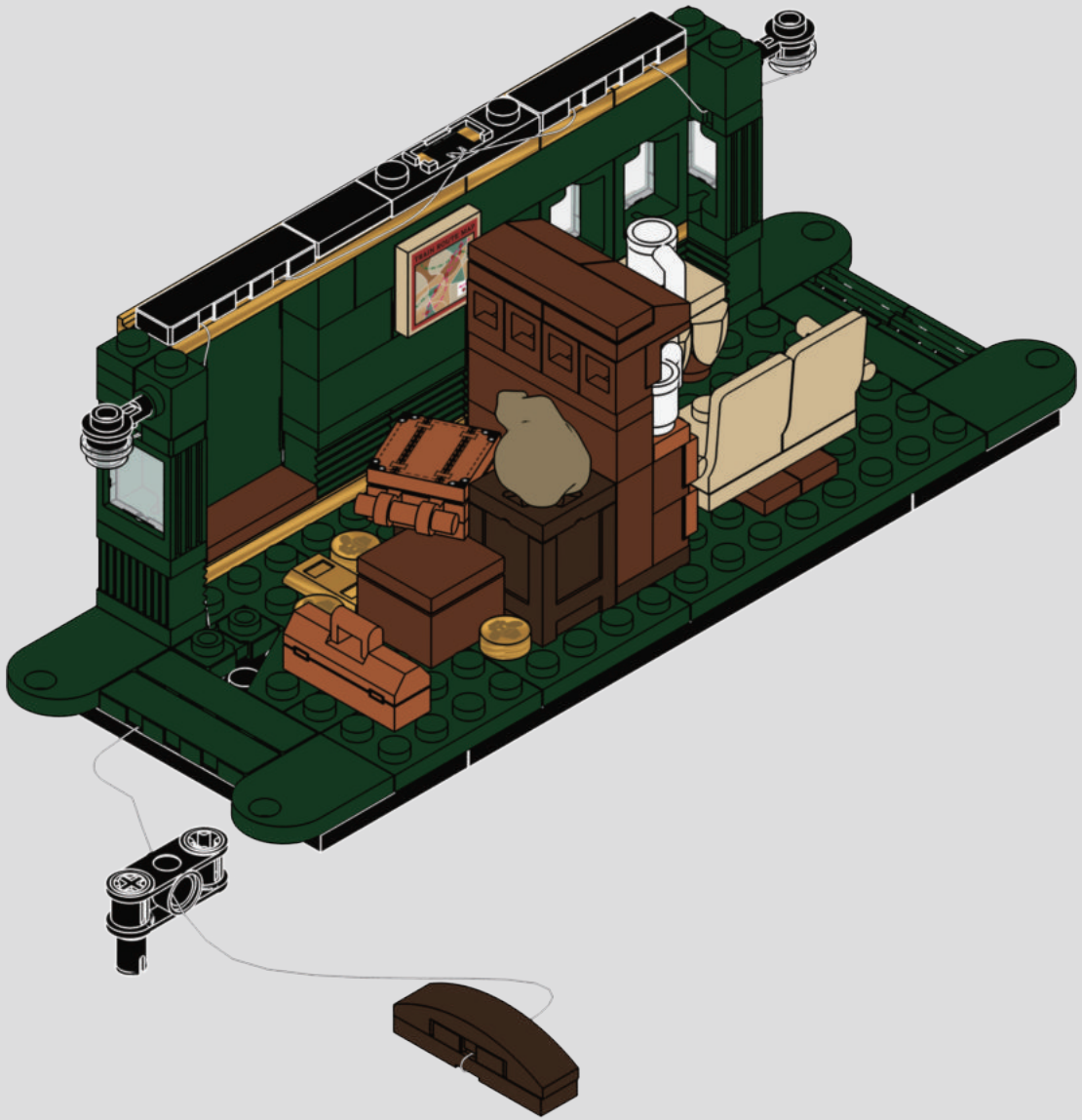

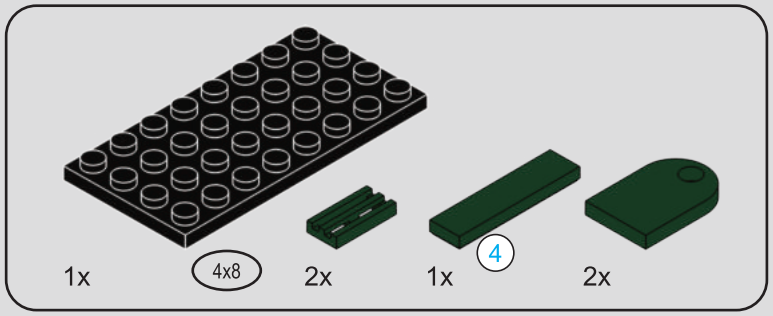

207

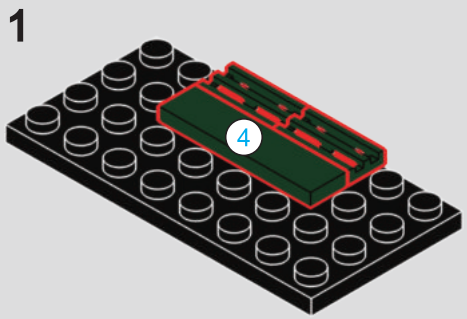

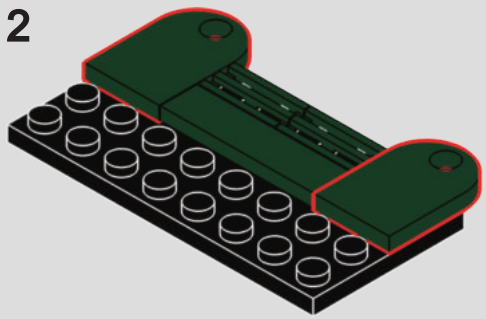

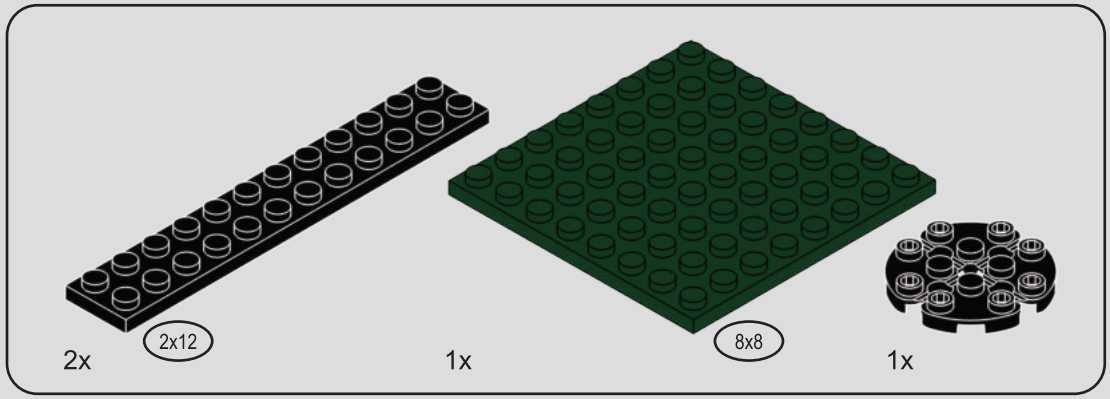

208

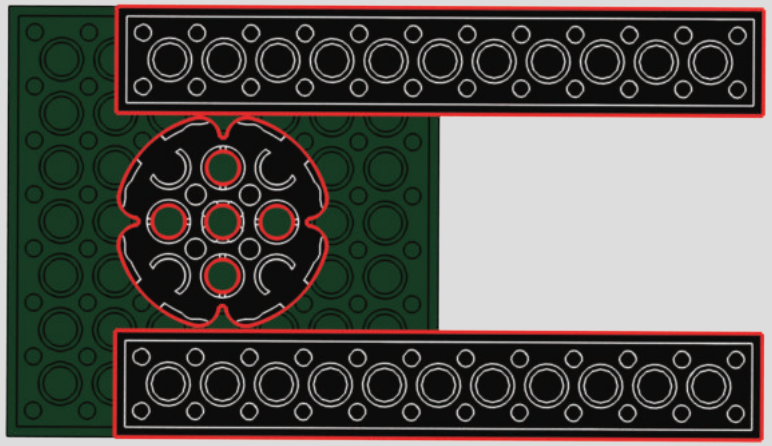

209

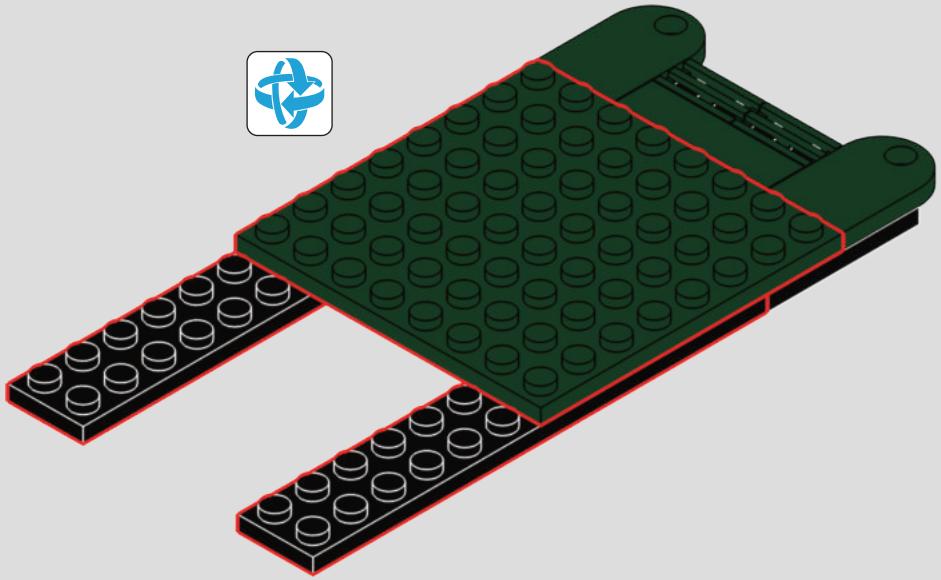

210

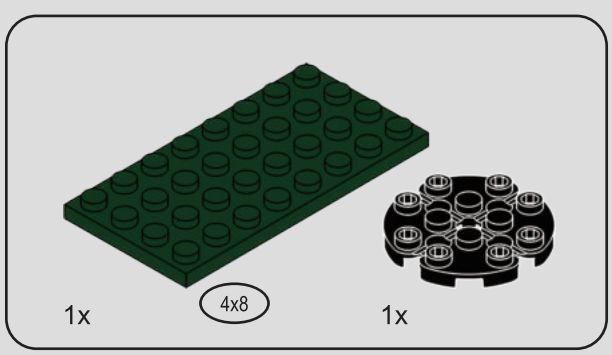

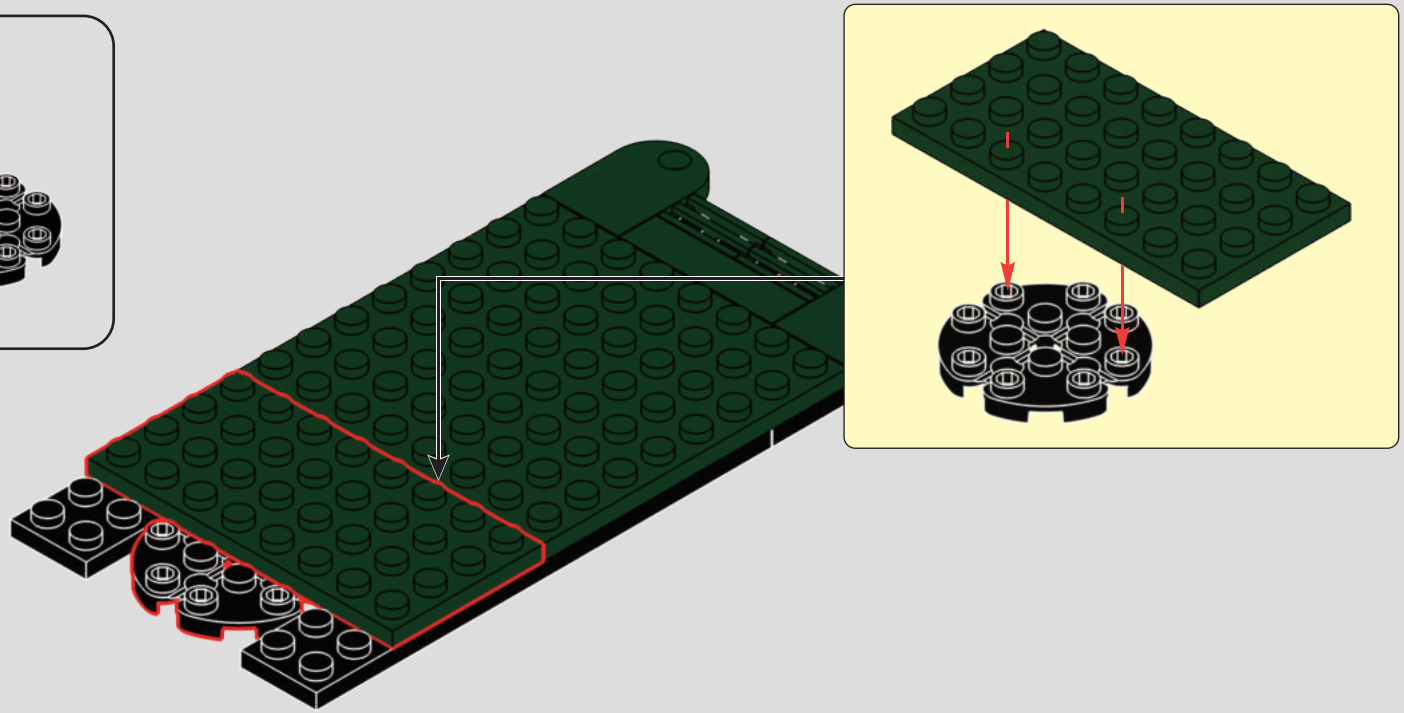

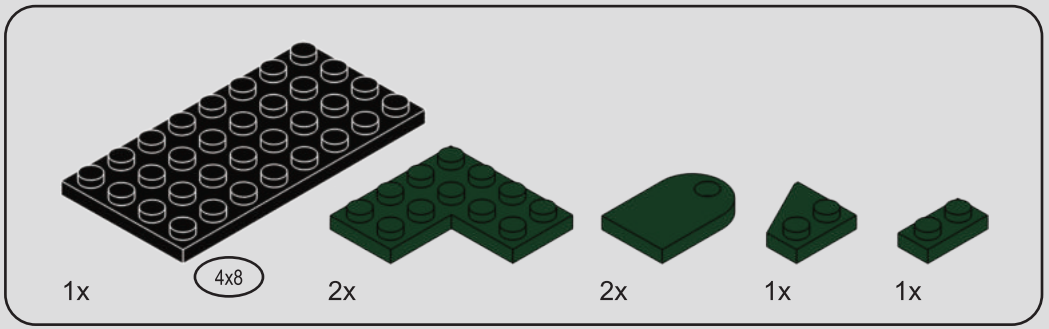

211

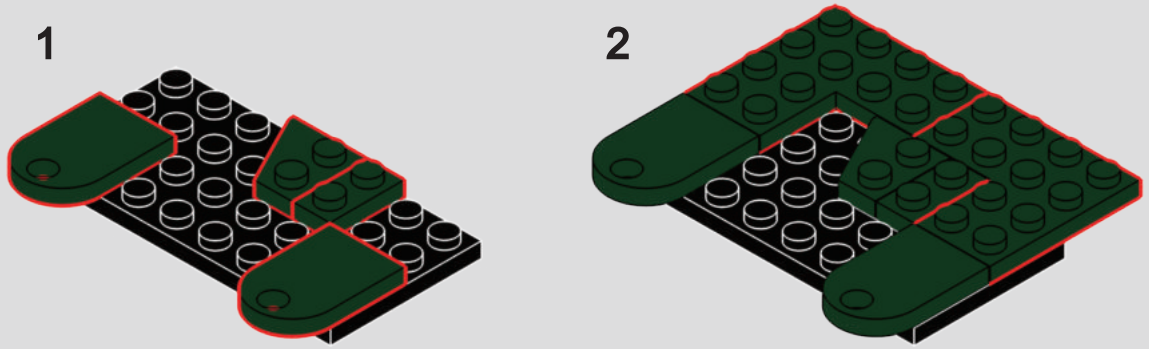

212

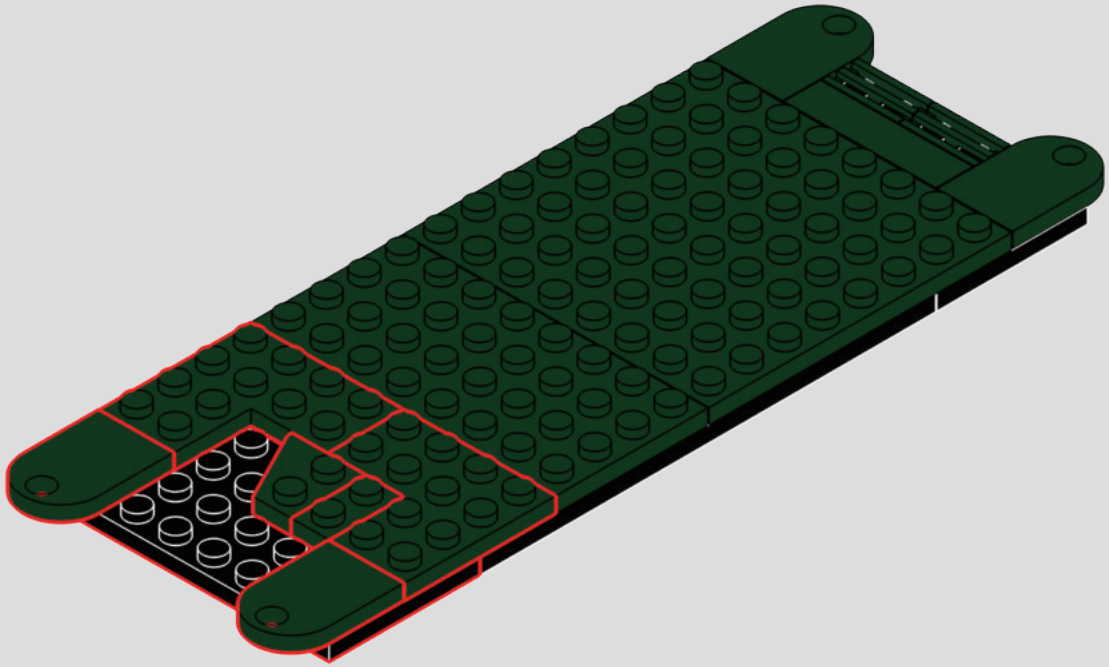

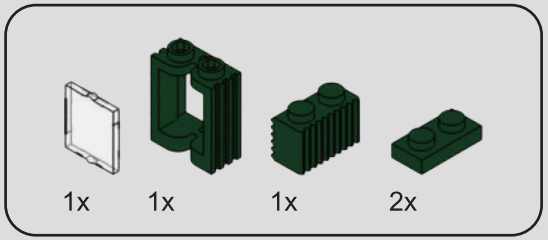

213

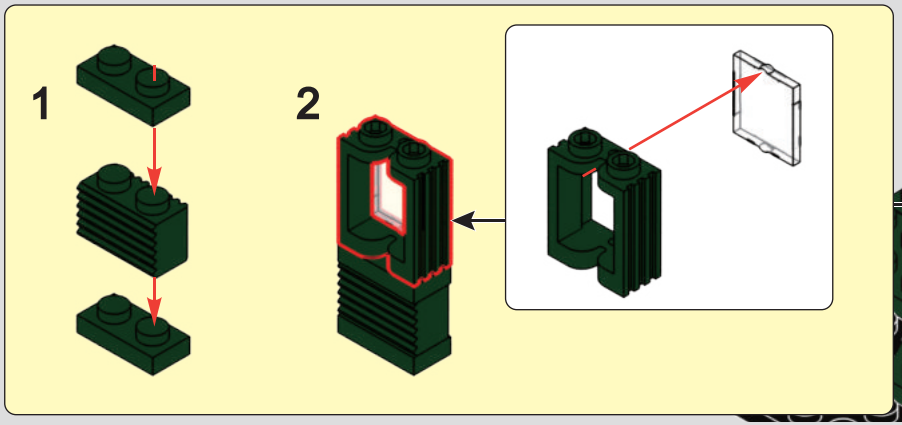

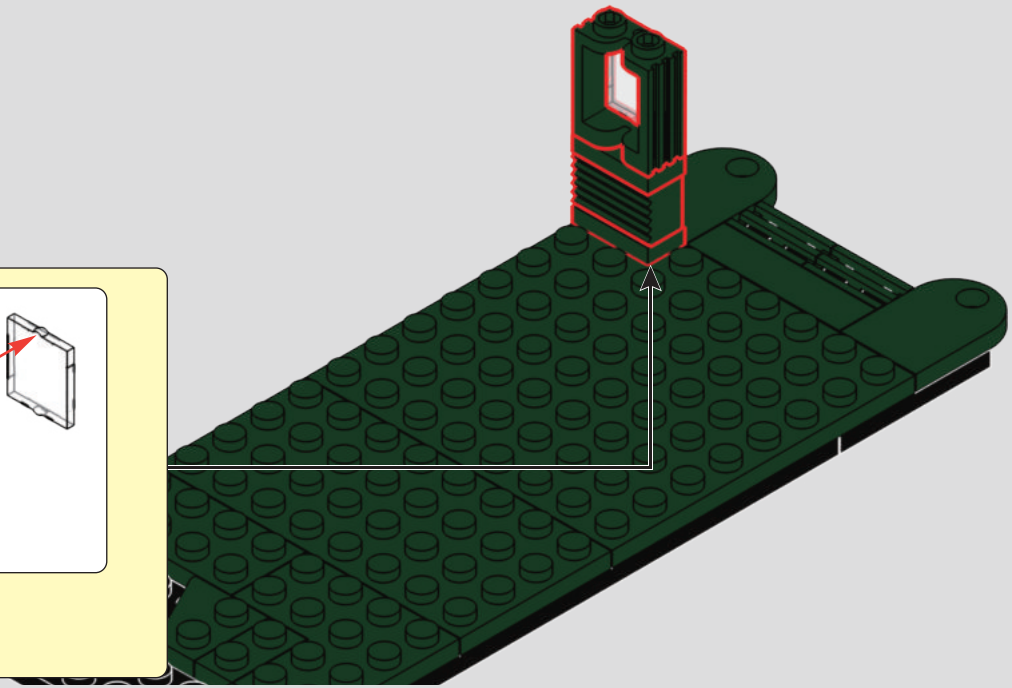

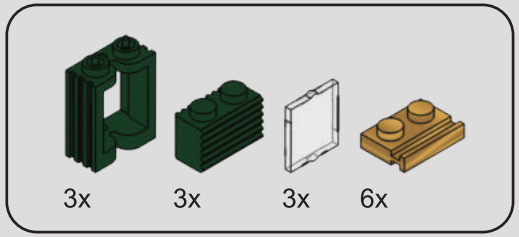

214

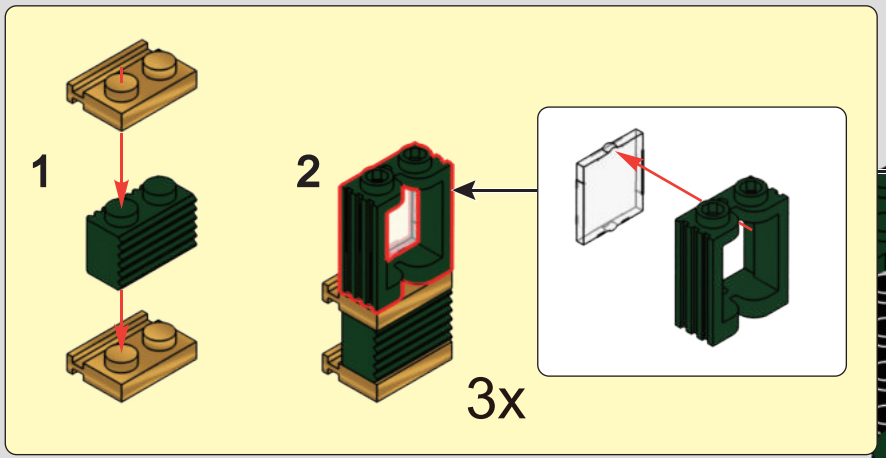

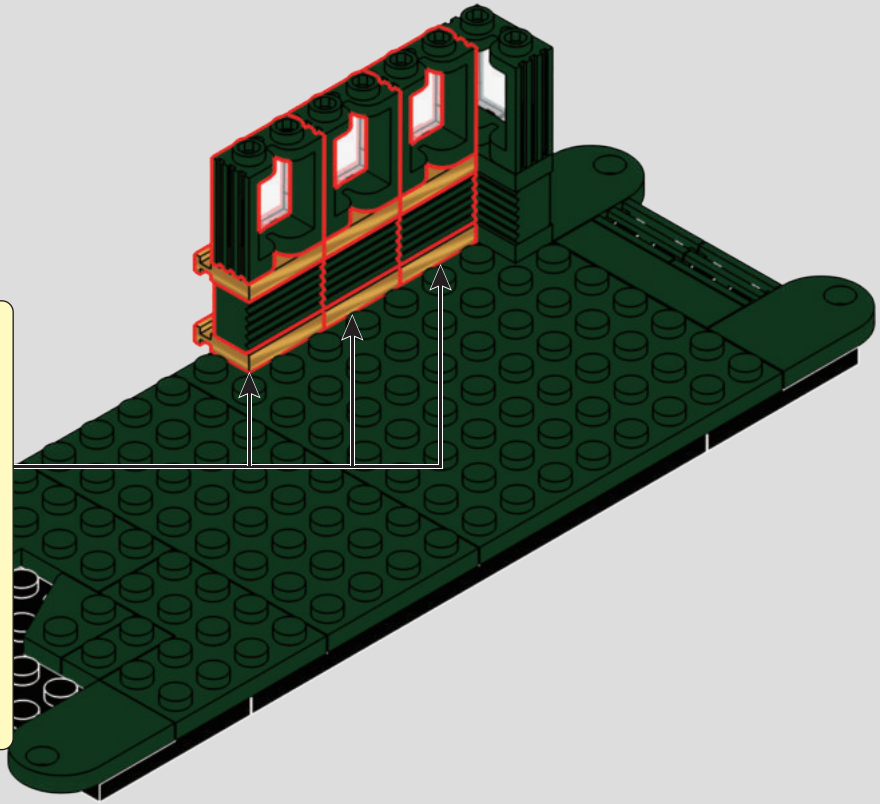

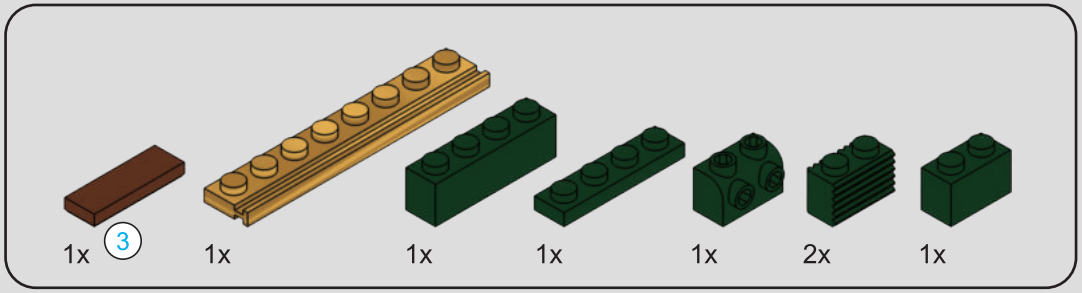

215

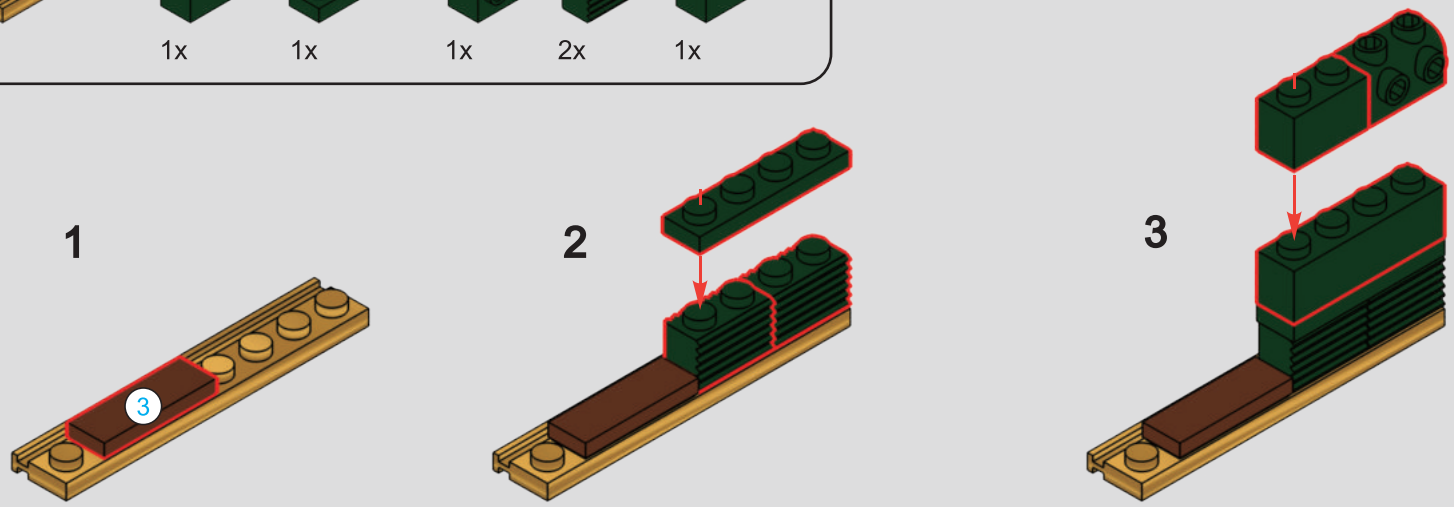

216

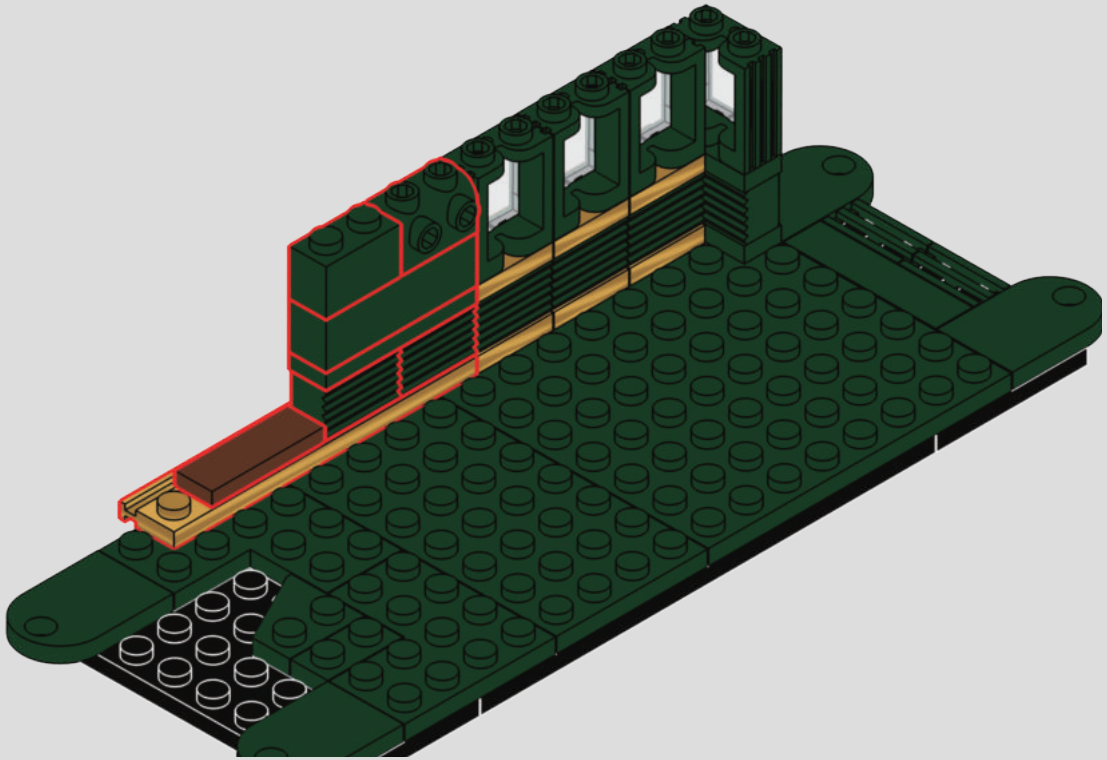

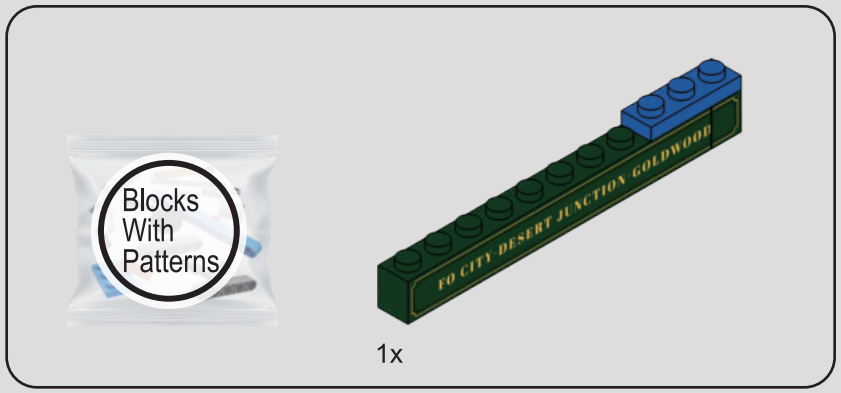
Blocks
With
Patterns
FO CITY DESERT JUNCTION GOLDWOOD
1x

217

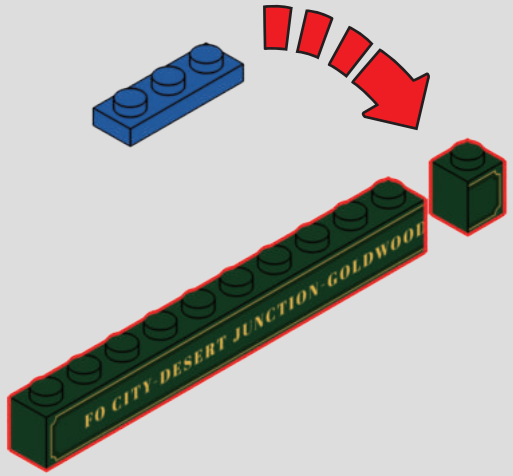
FO CITY DESERT JUNCTION GOLDWOOD

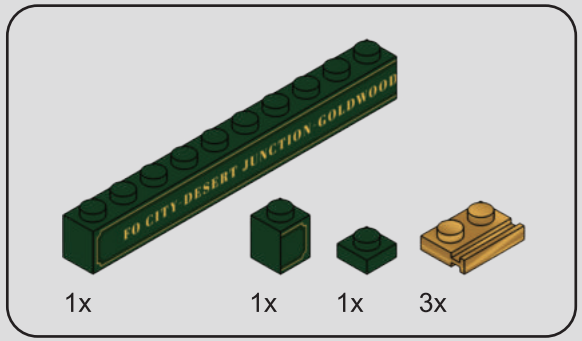
FO CITY DESERT JUNCTION GOLDWOOD
1x
1x
1x
3x

218

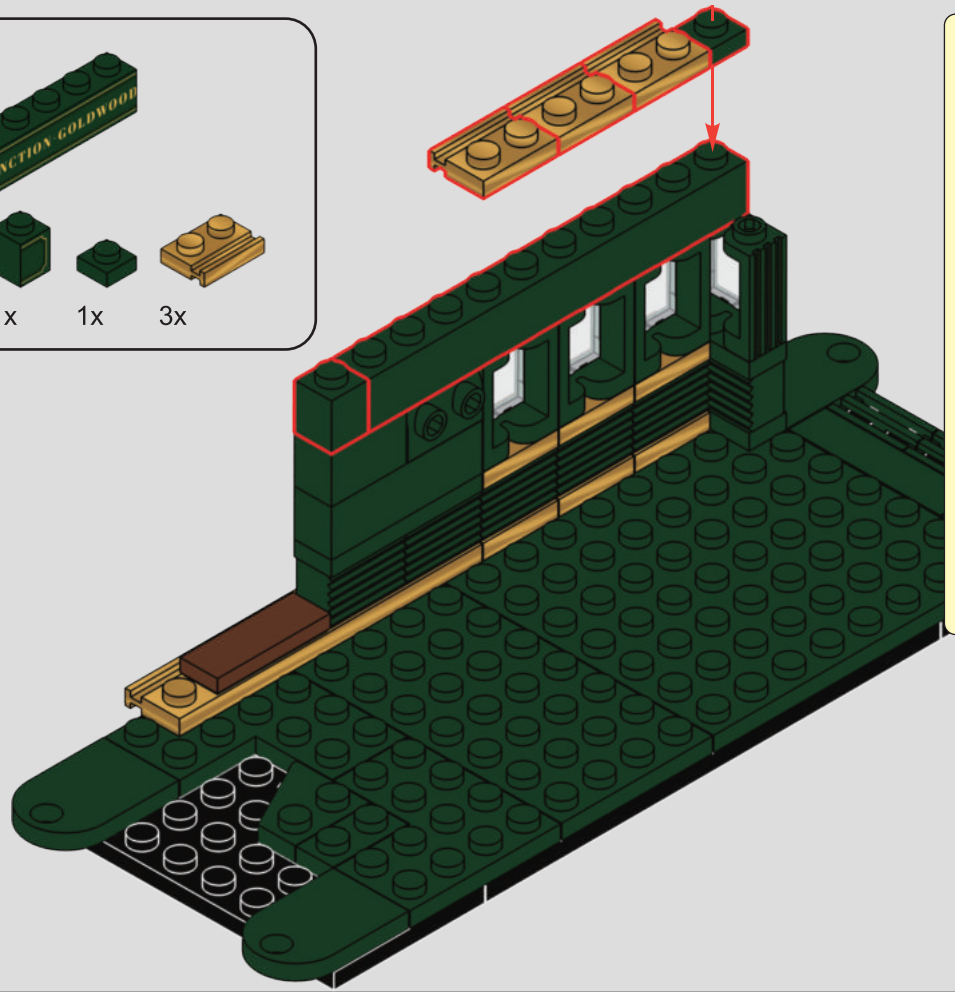

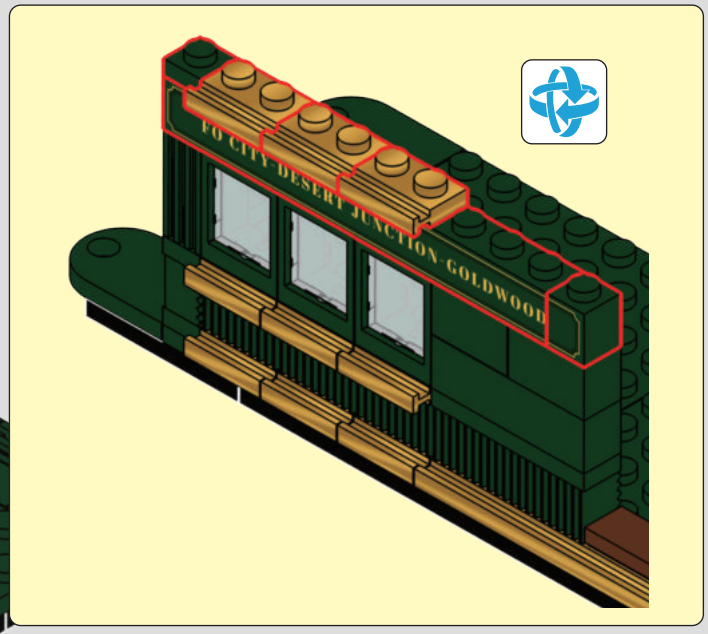
FO CITY DESERT JUNCTION GOLDWOOD

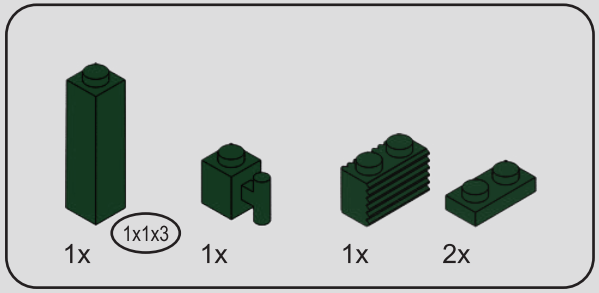

219

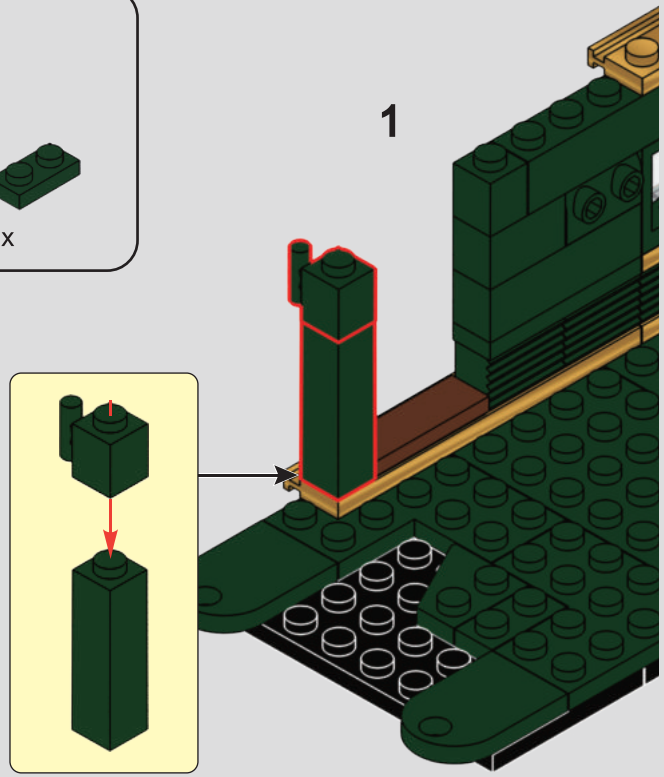

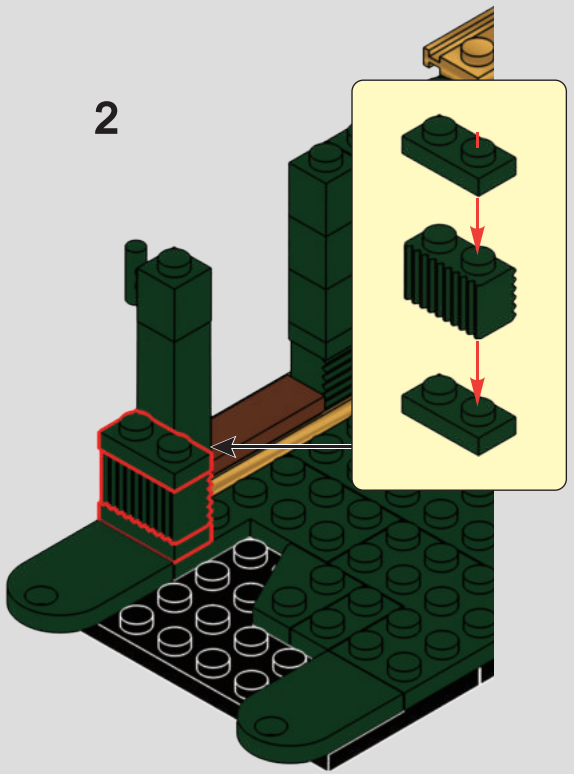

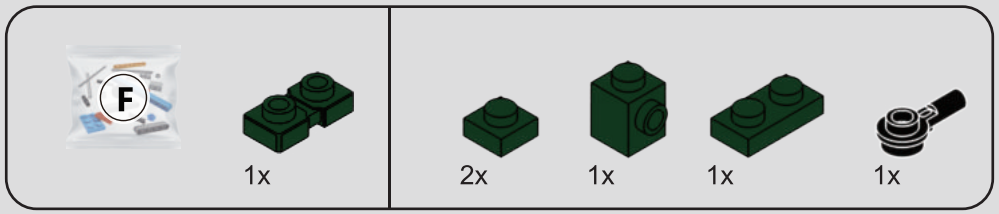

220

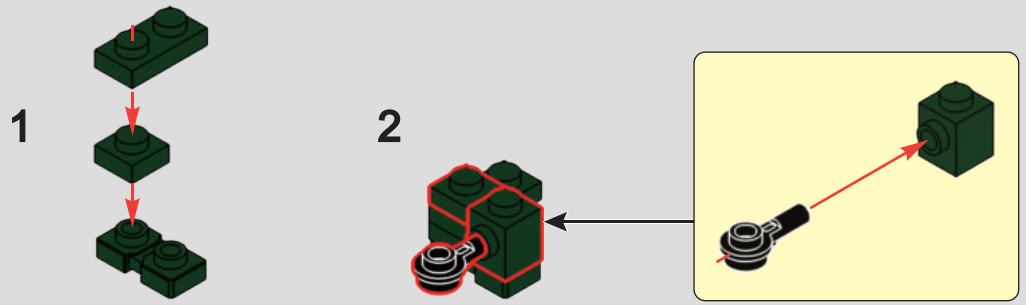

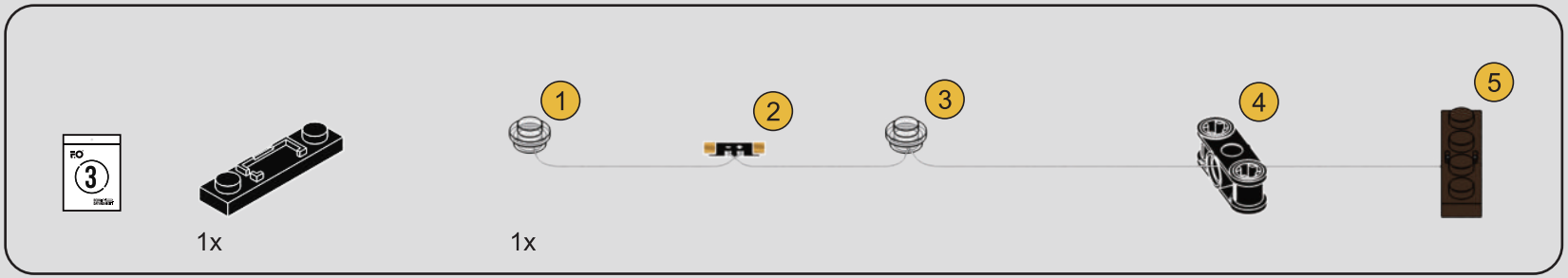

221

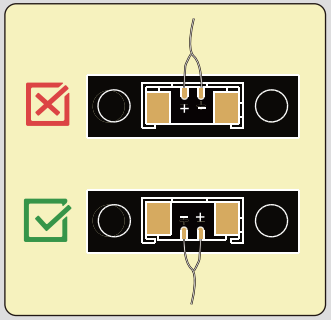

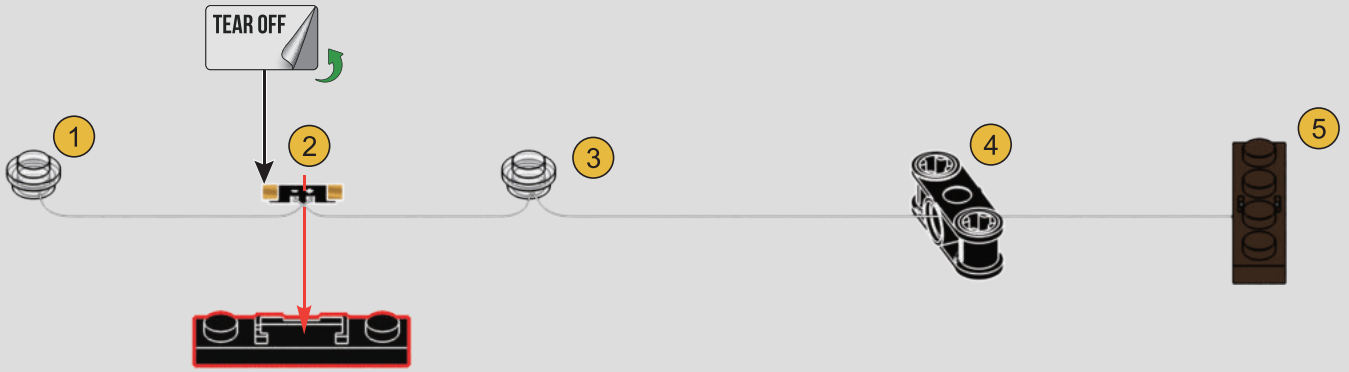

222

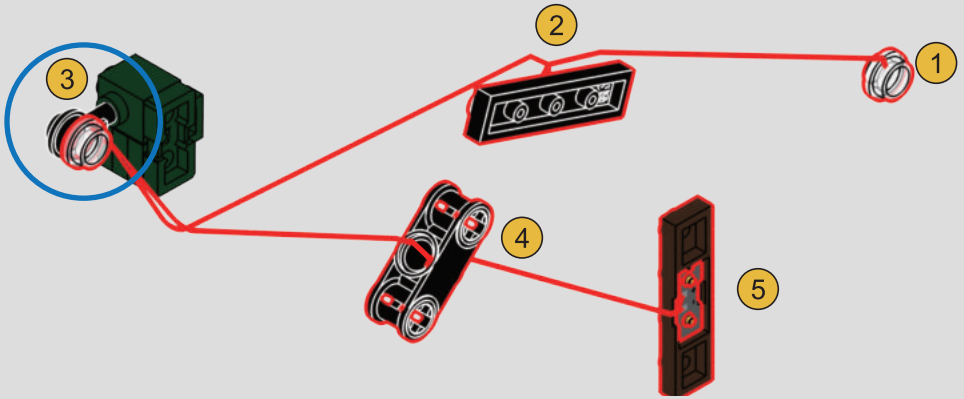

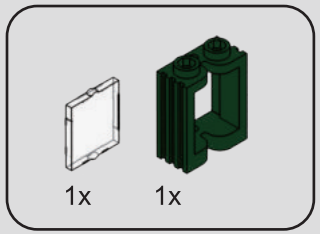

223

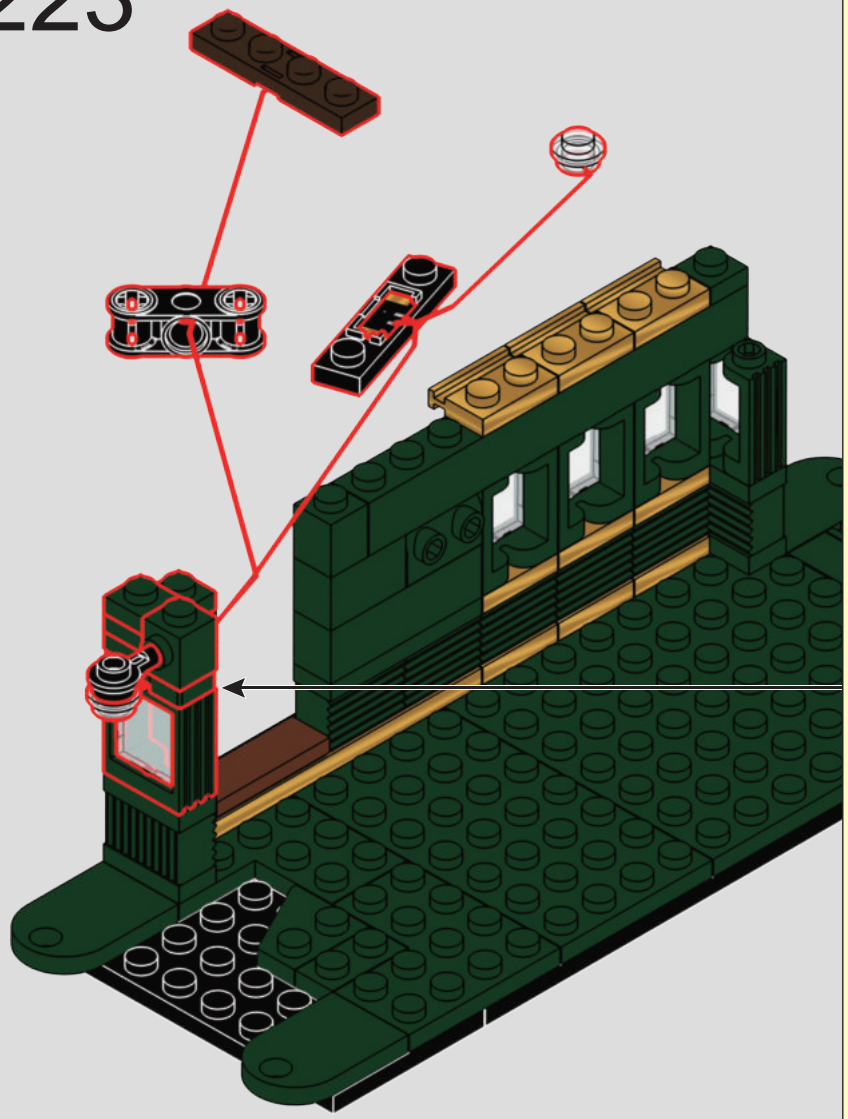

1

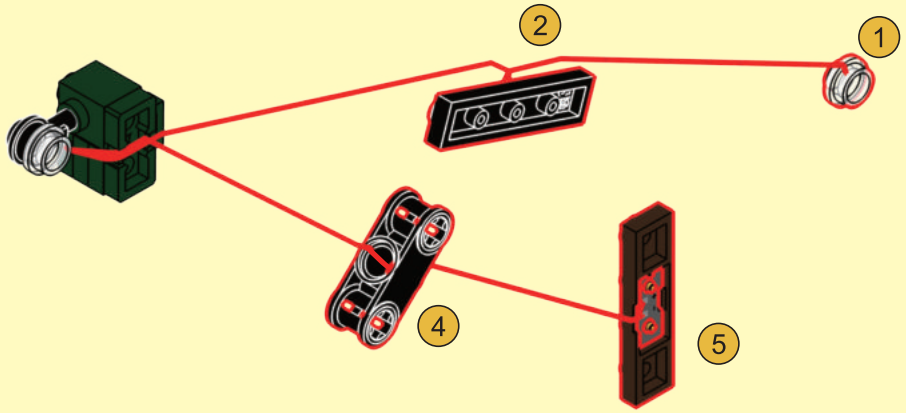

2

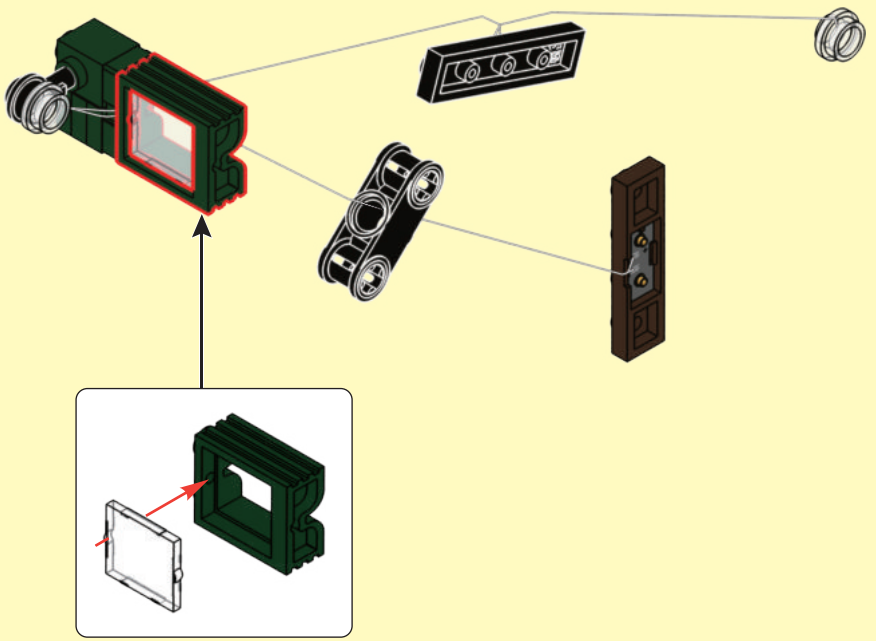

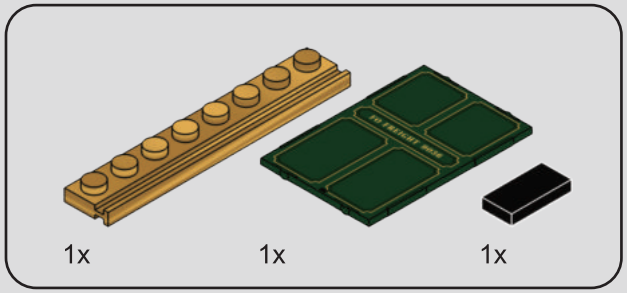

224

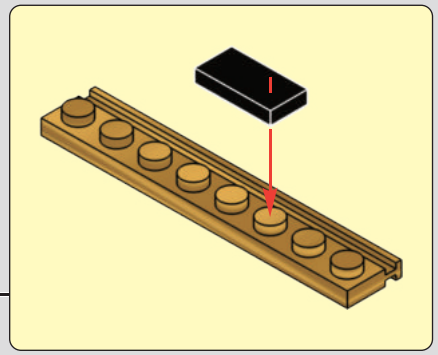

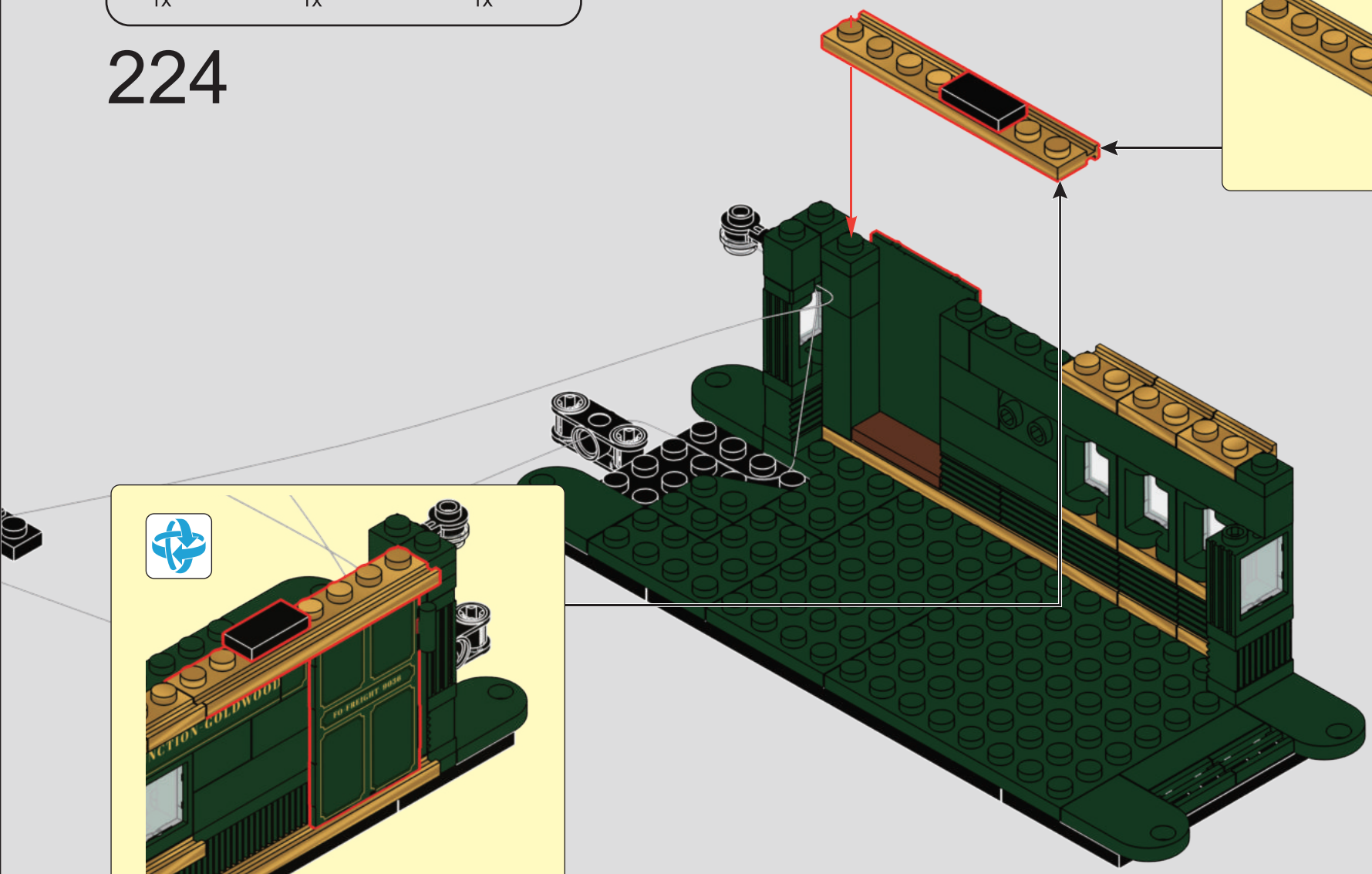

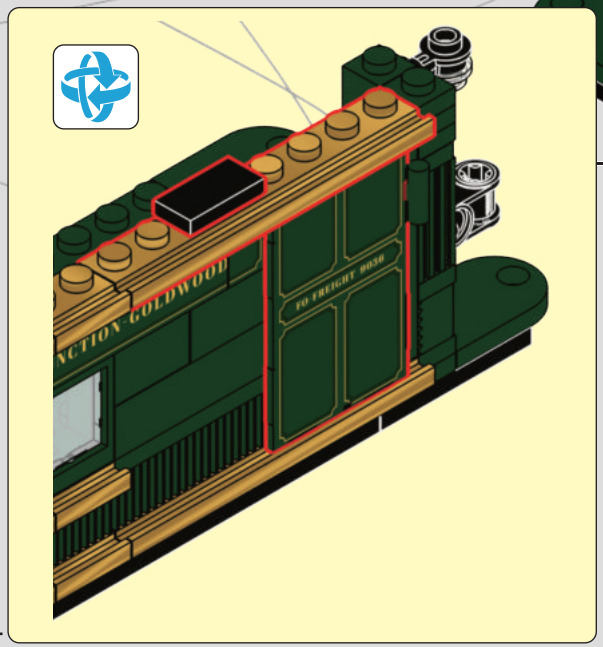

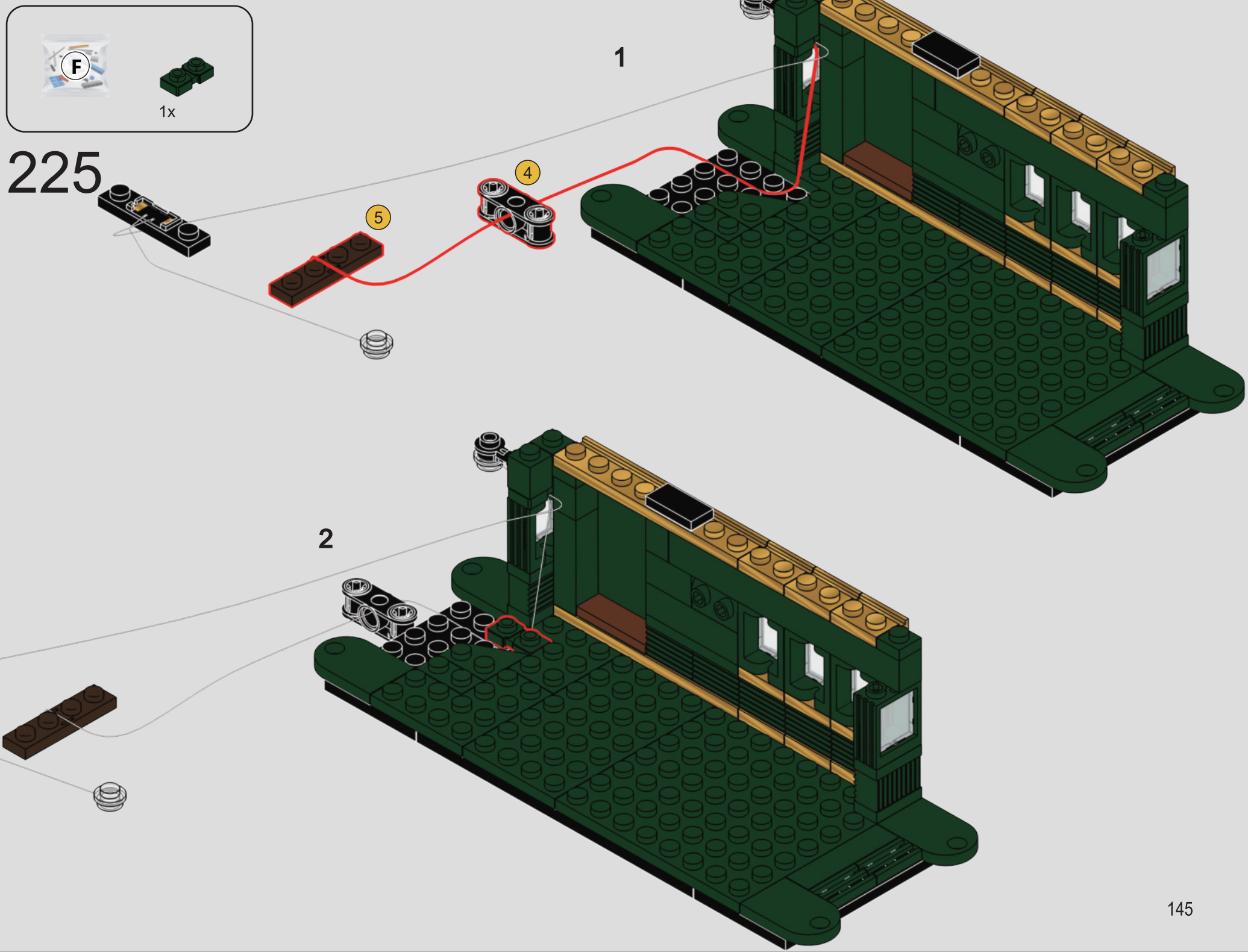
F
1x
225
1
2
4
5

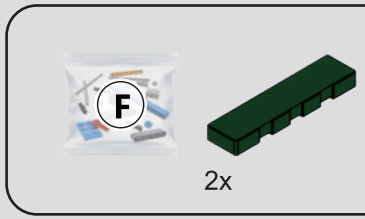

226

1

2

4

5

227

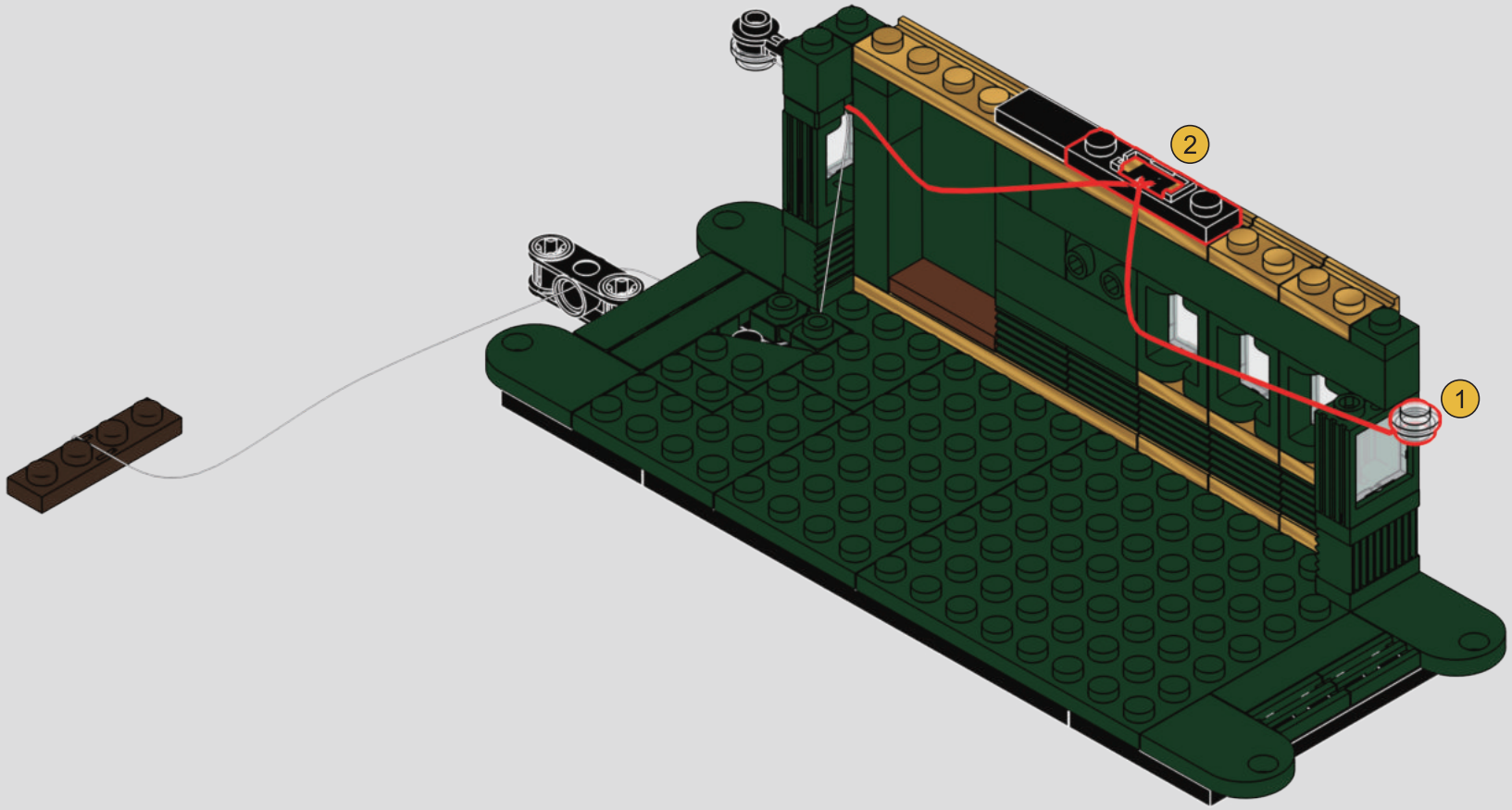

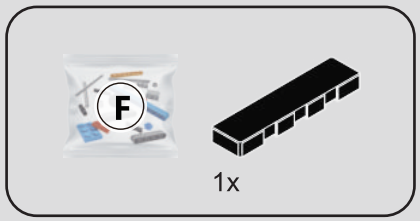

228

1

2

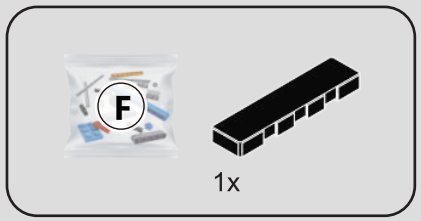

229

1

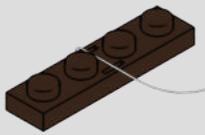

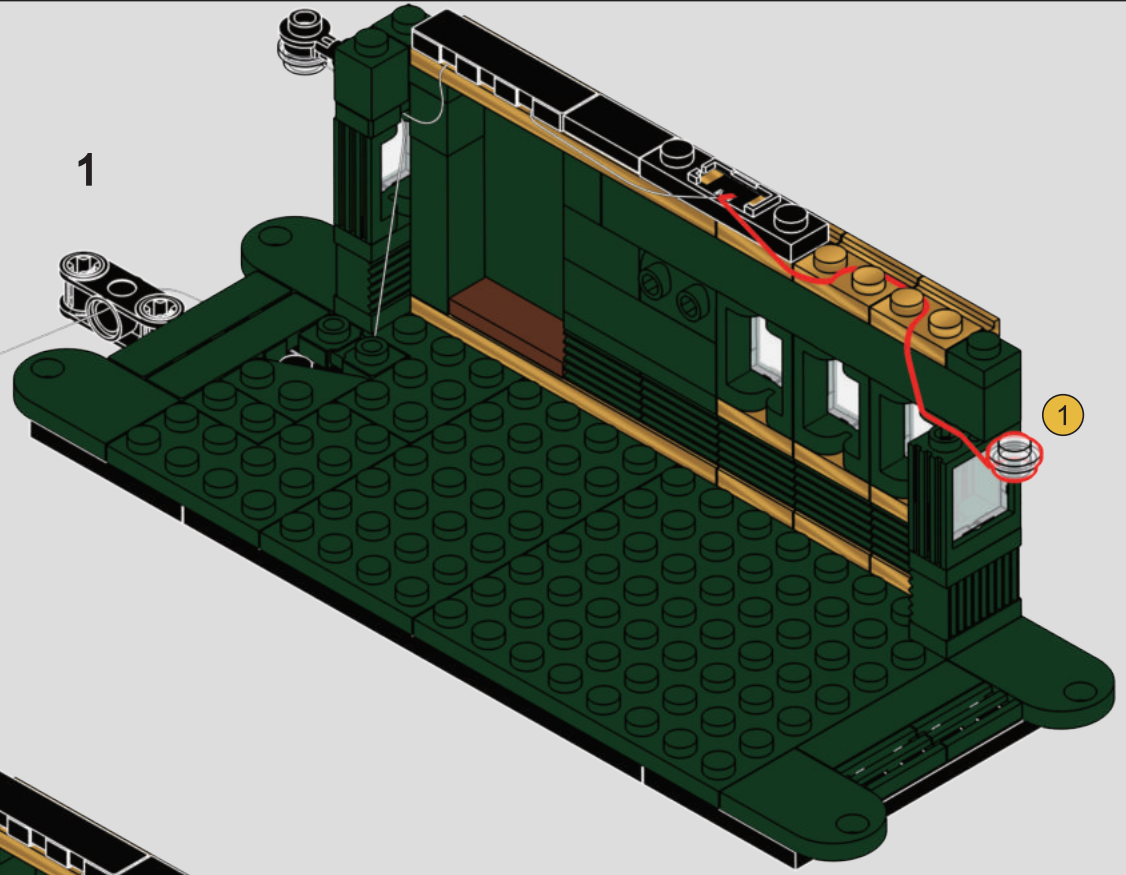

2

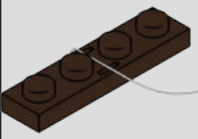

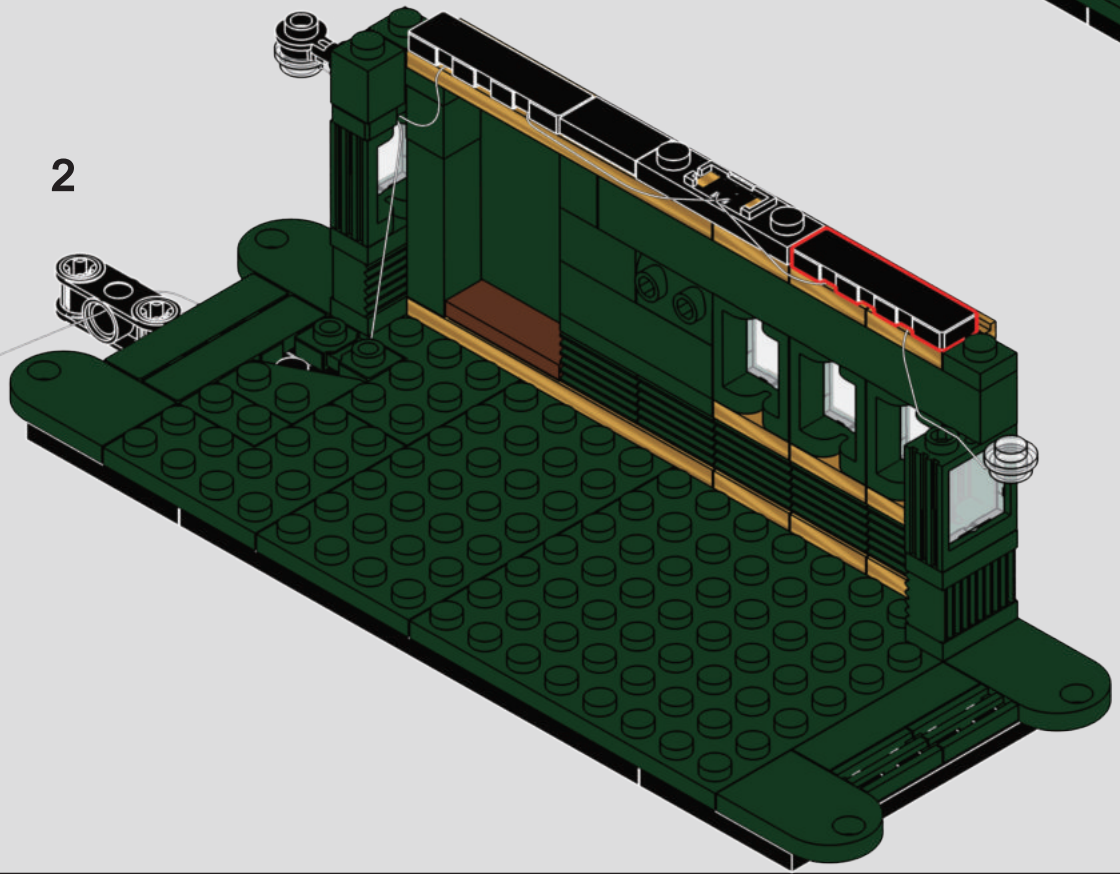

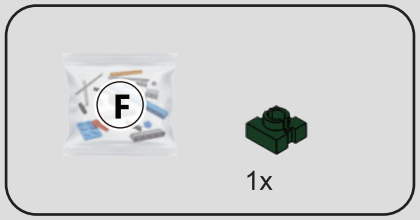

230

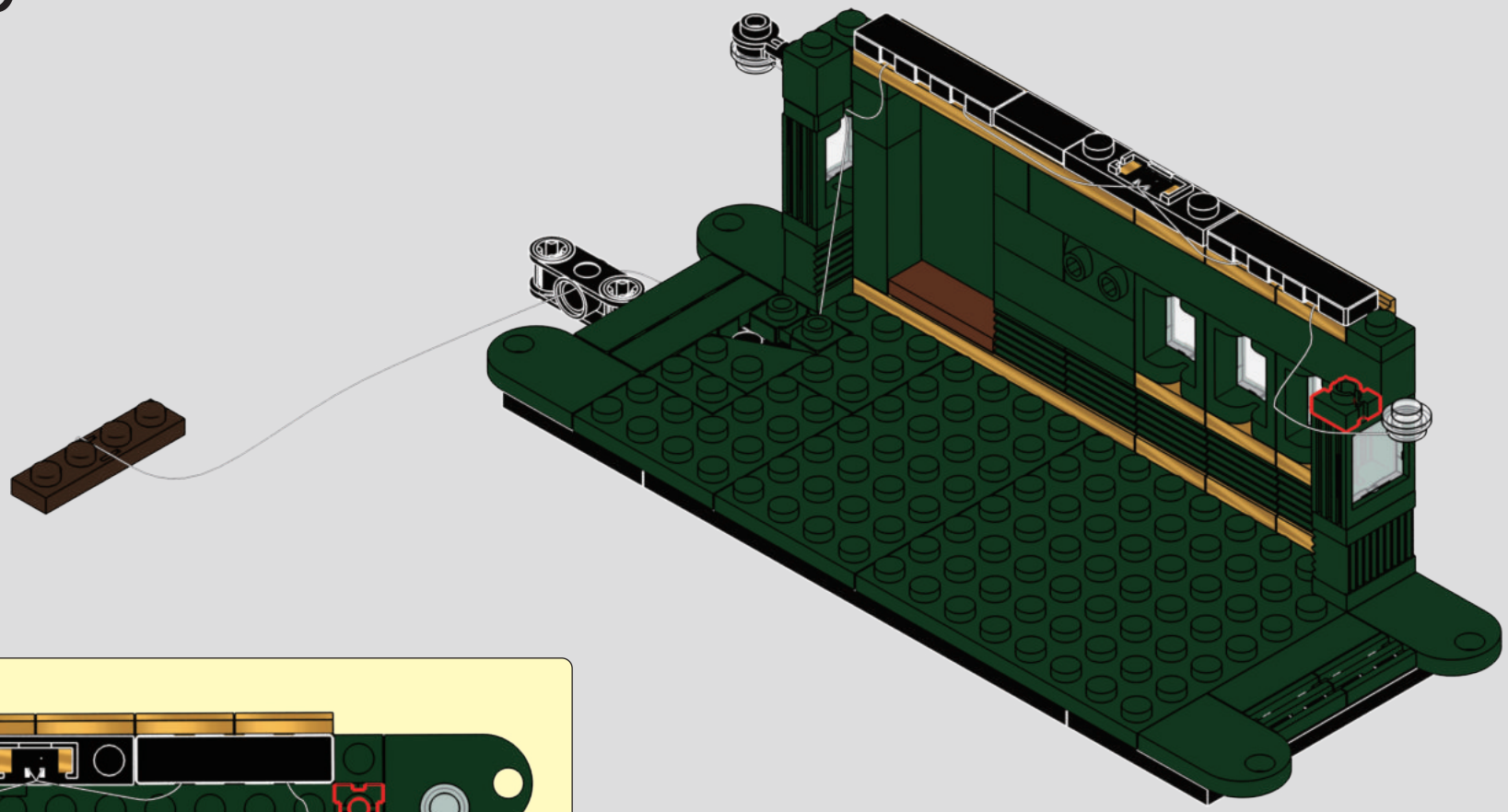

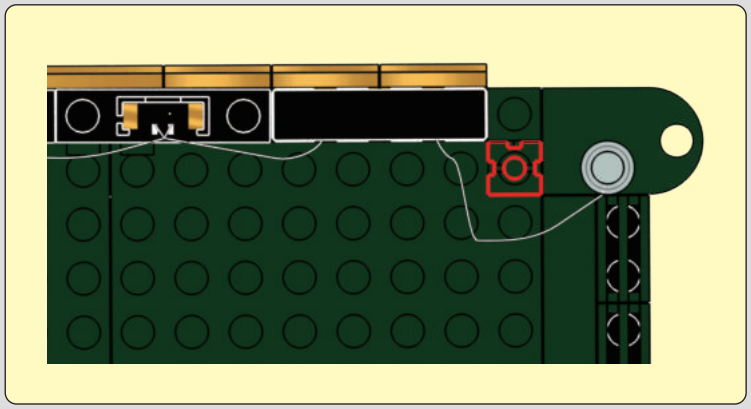

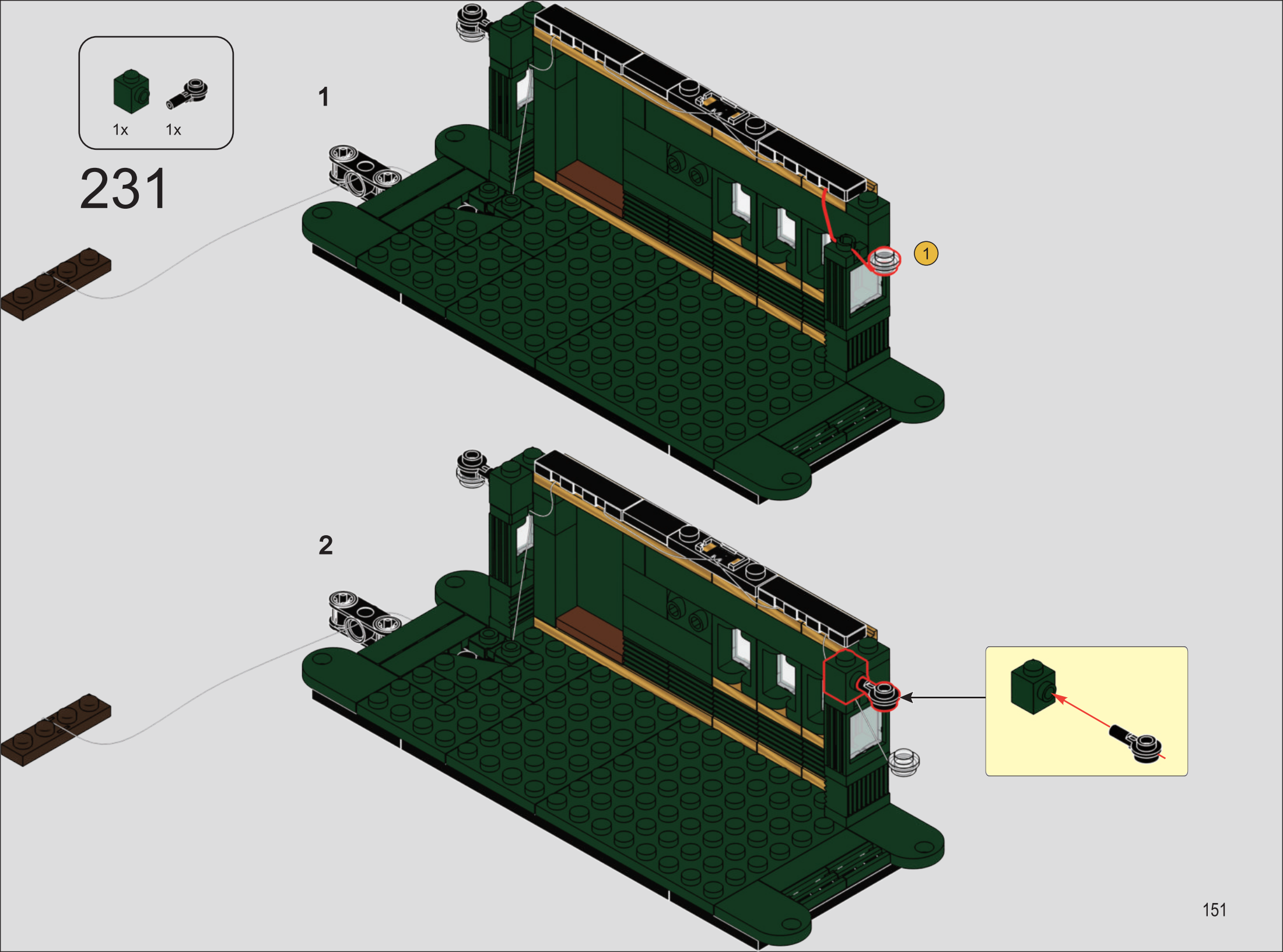
1x
1x
231
1
1
2

232

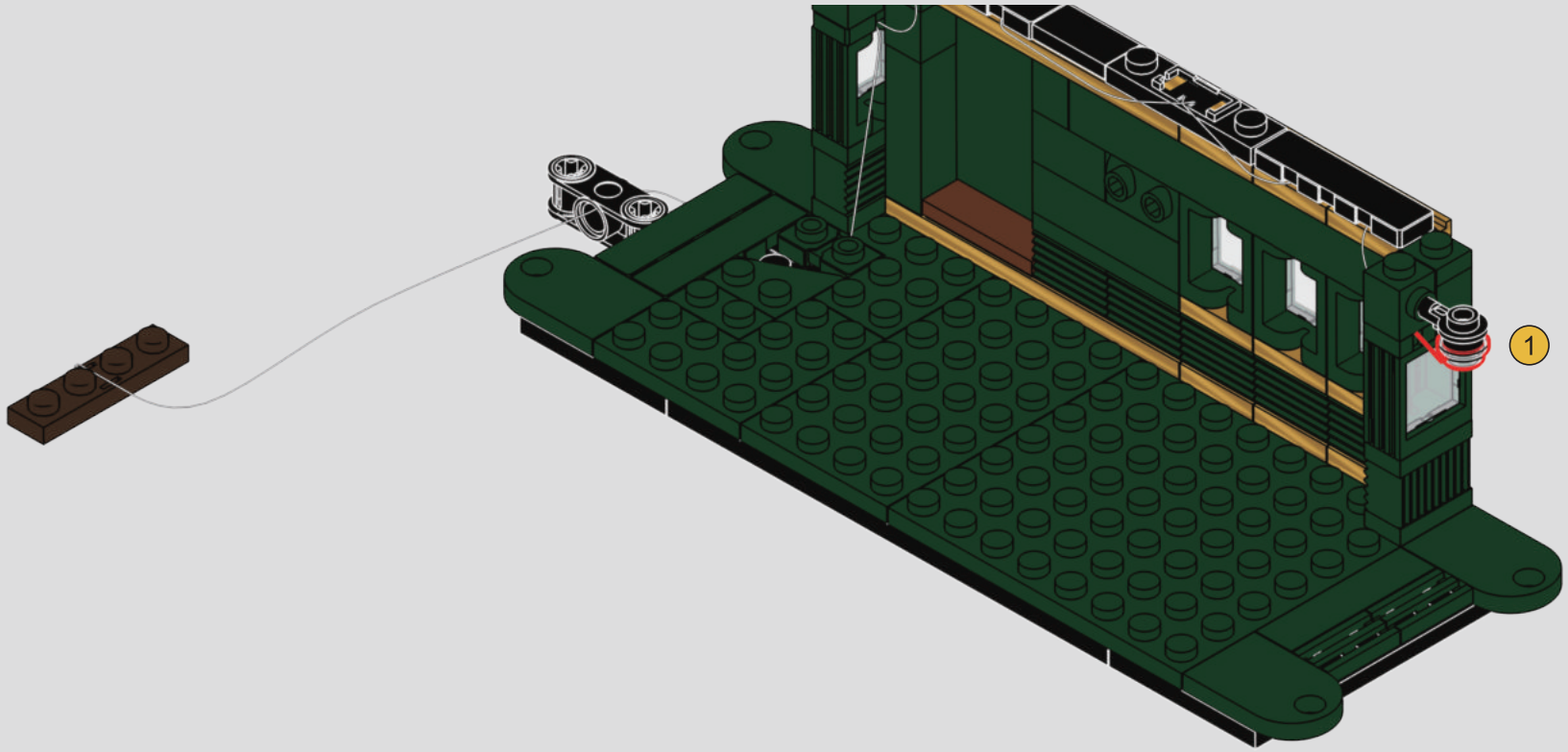

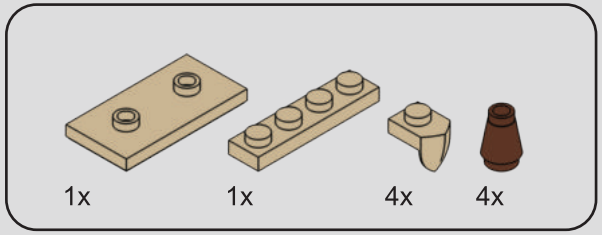

233

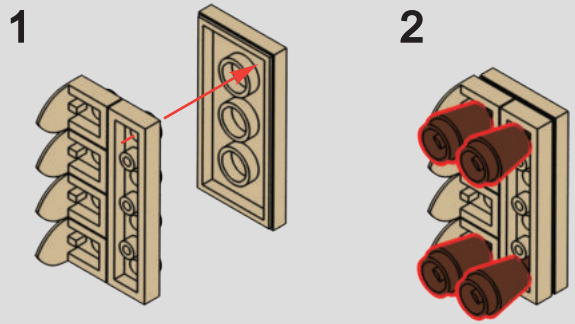

234

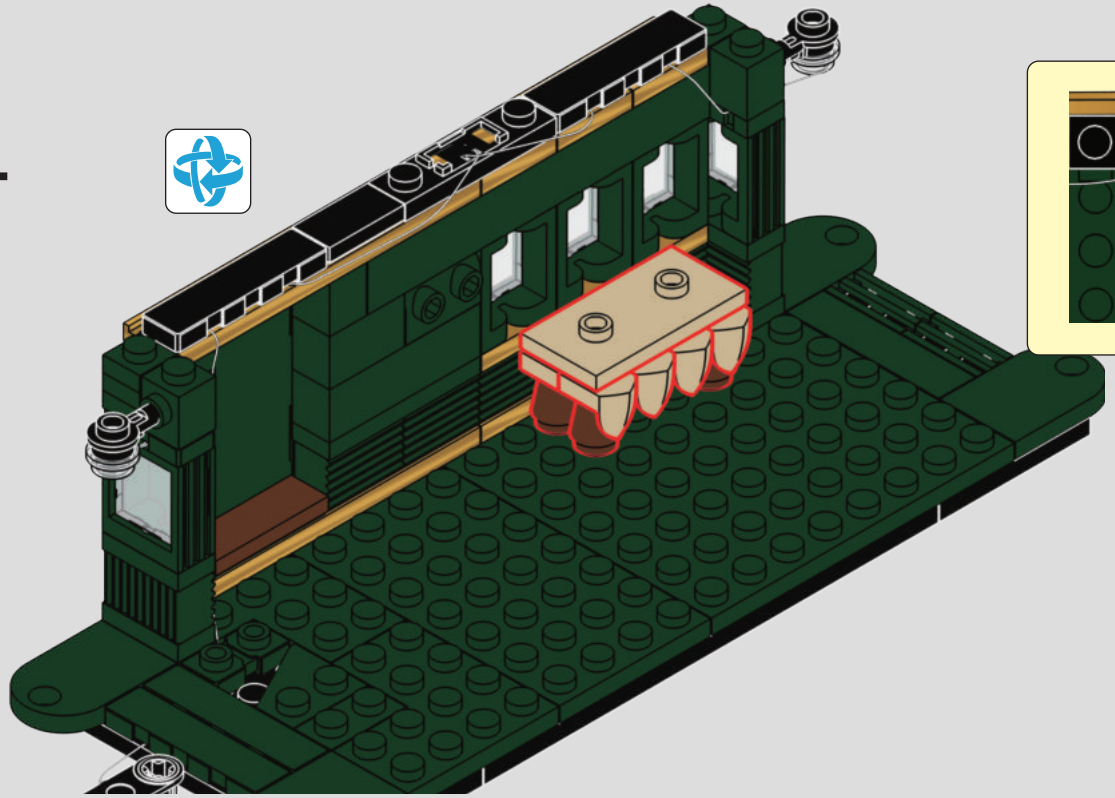

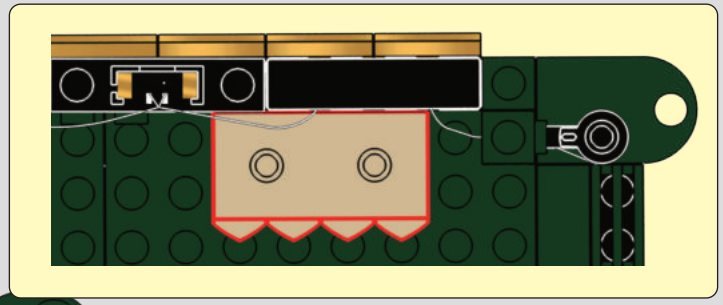

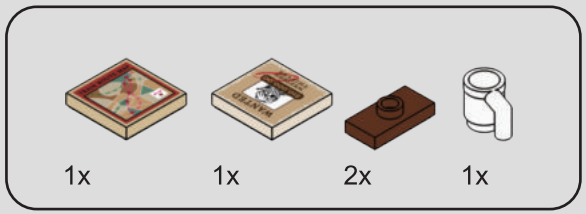

235

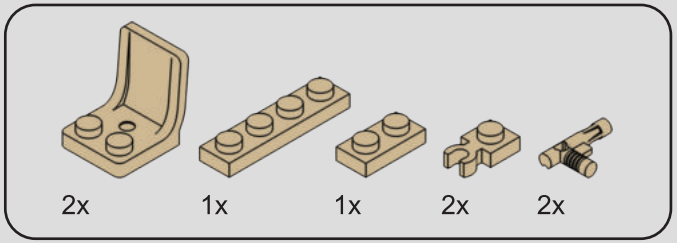

236

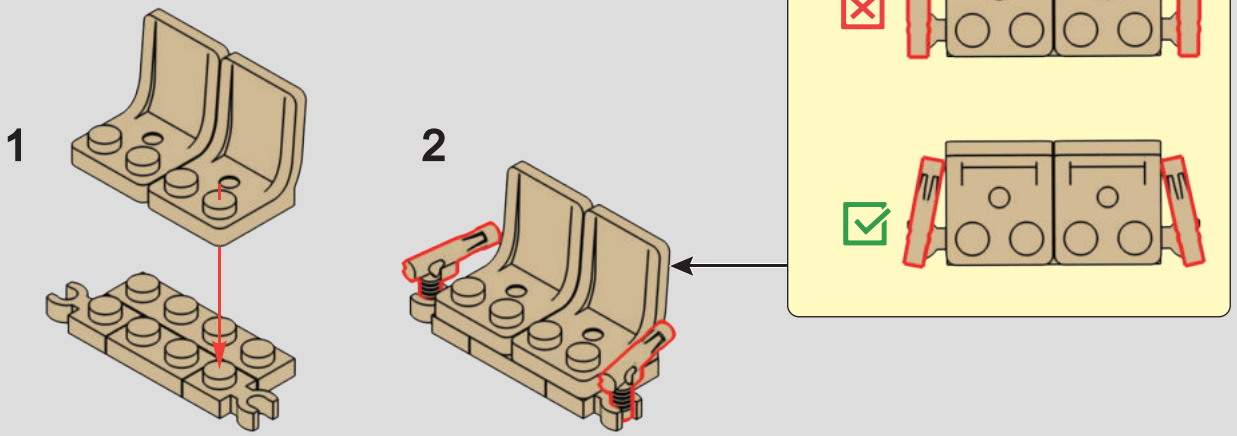

237

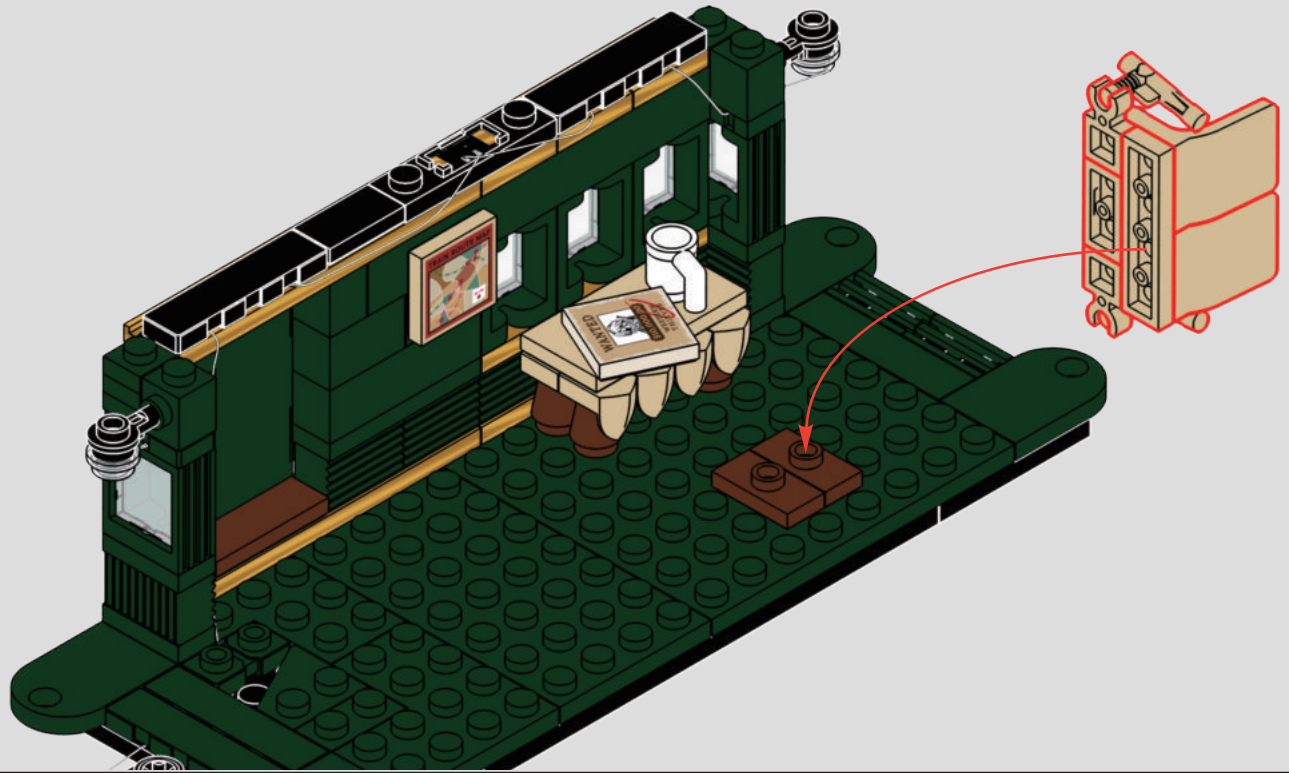

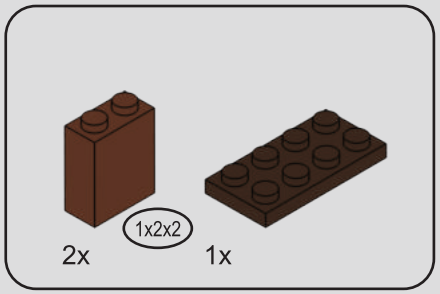

238

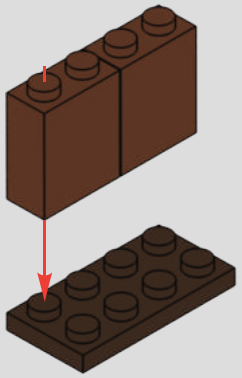

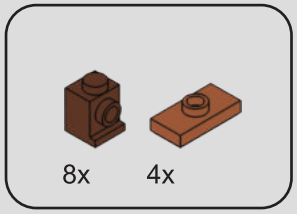

239

1

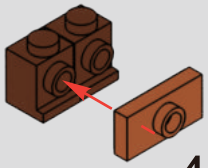

2

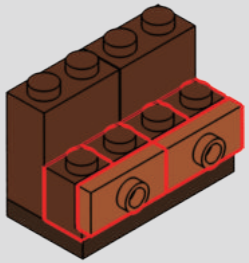

3

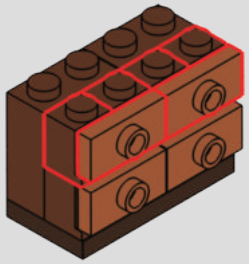

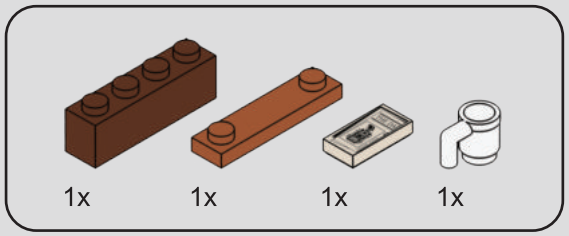

240

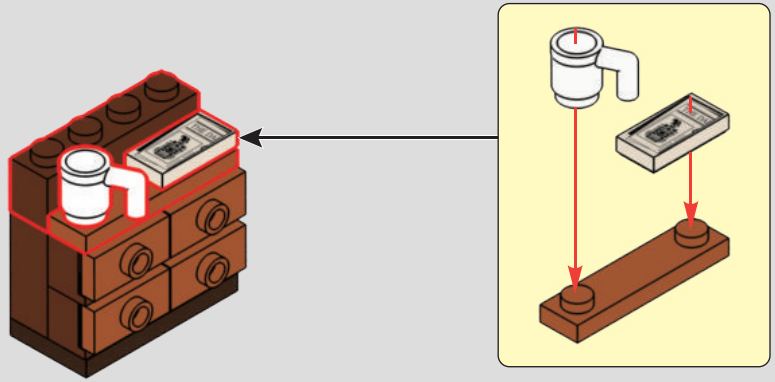

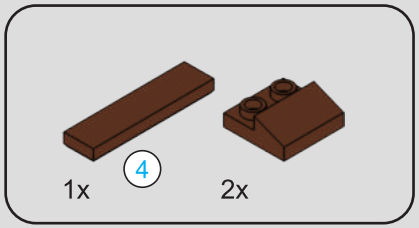

241

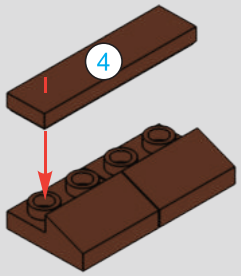

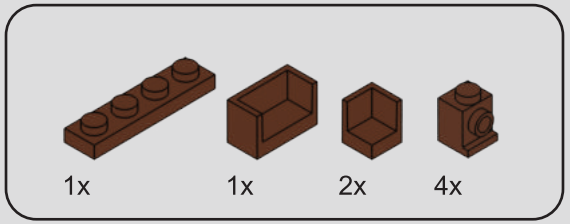

242

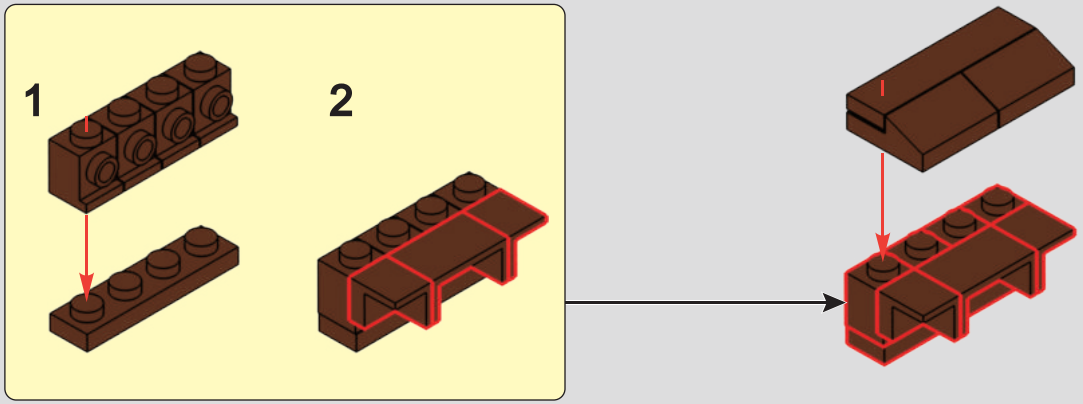

243

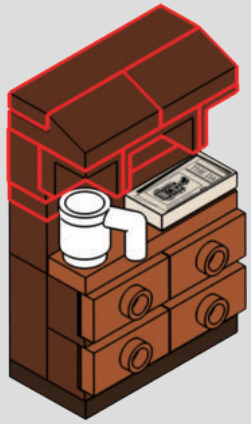

244

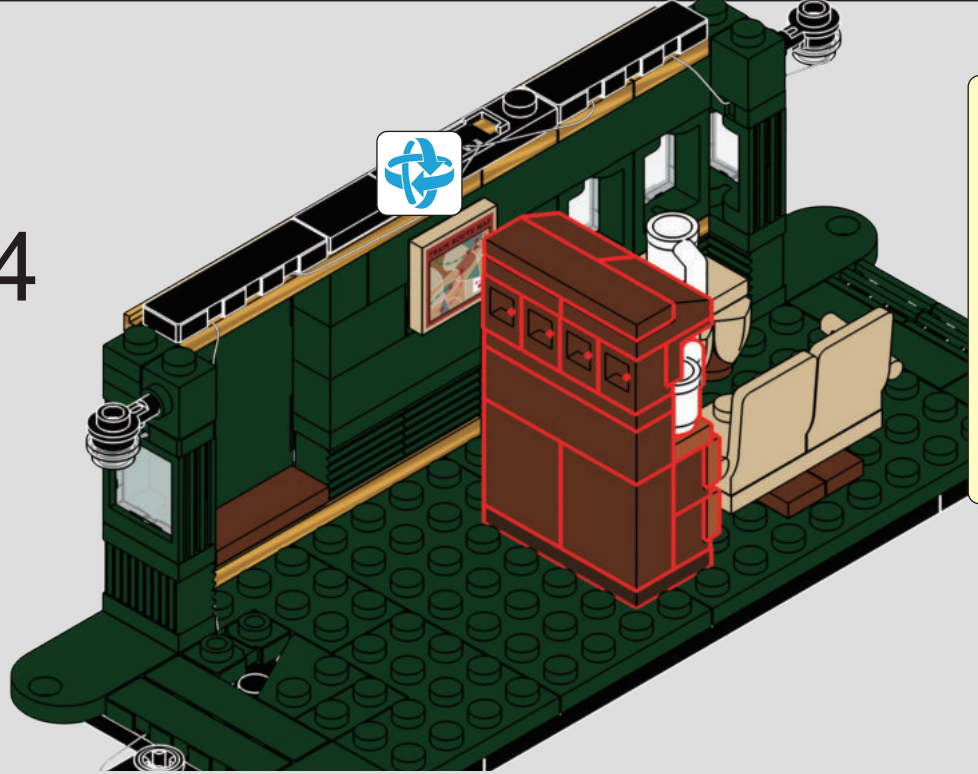

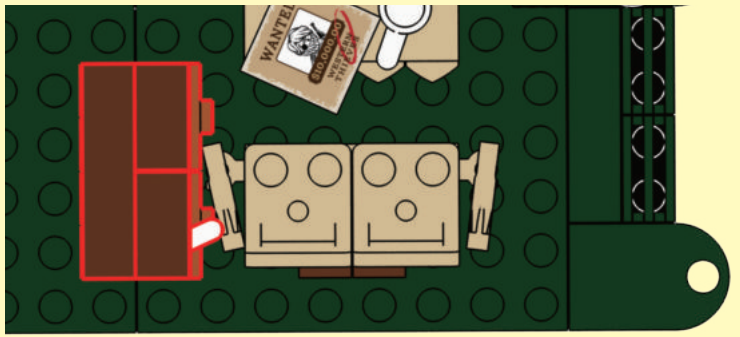

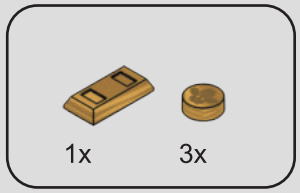

245

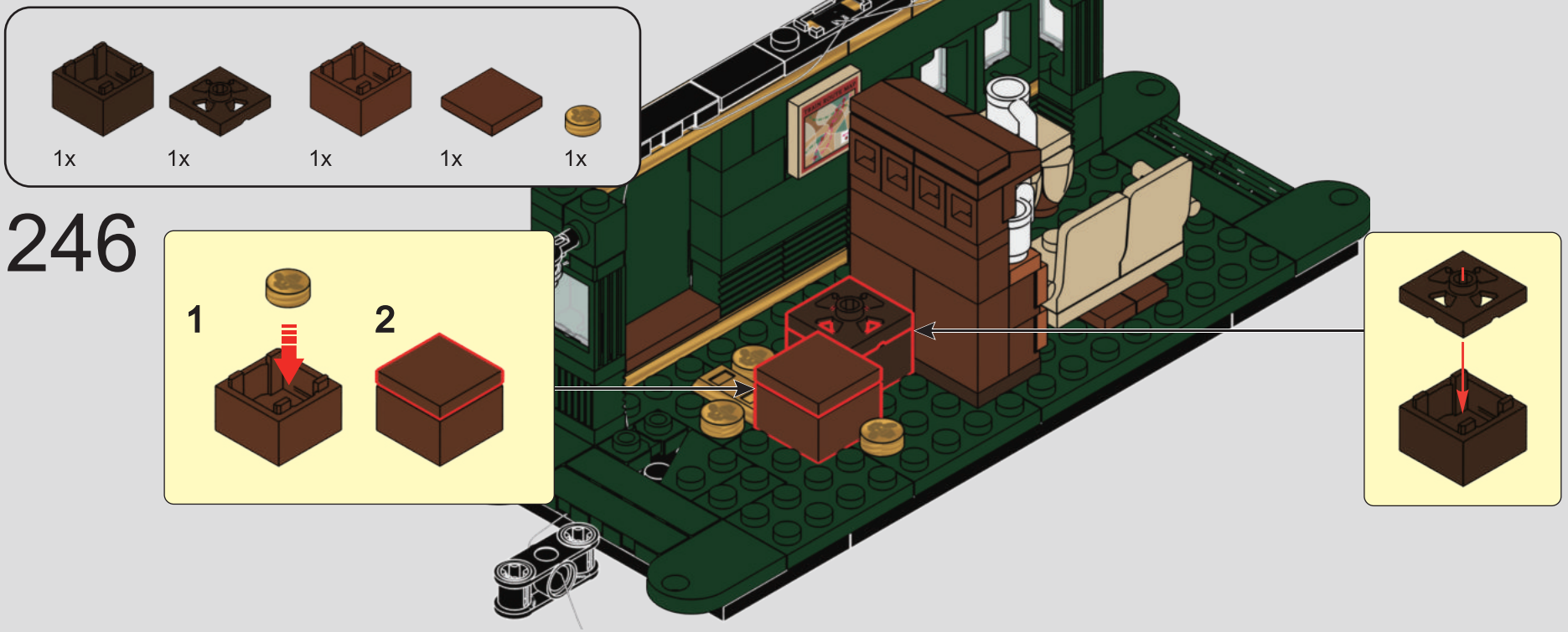
1x
1x
1x
1x
1x
246
1
2

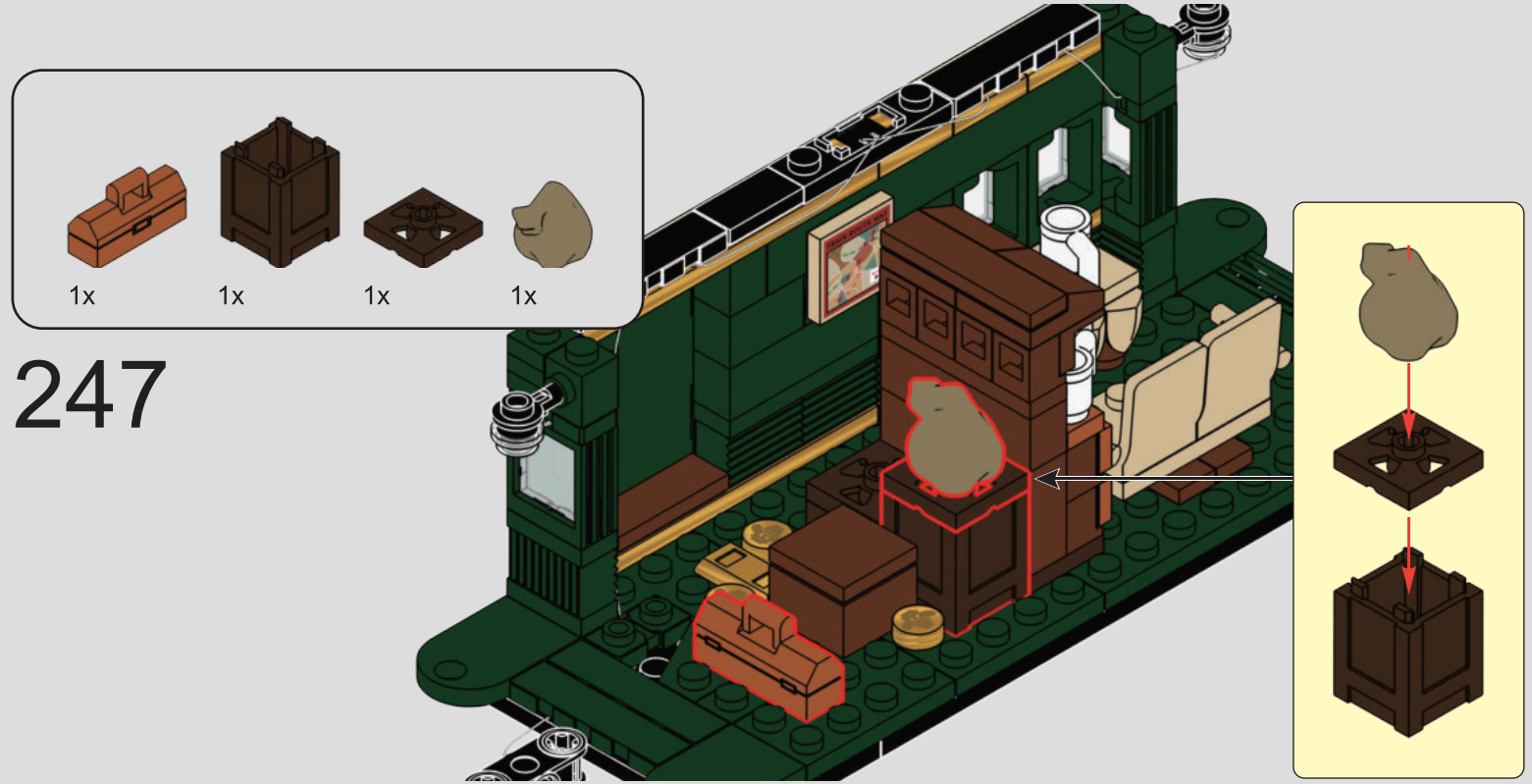
1x
1x
1x
1x
247

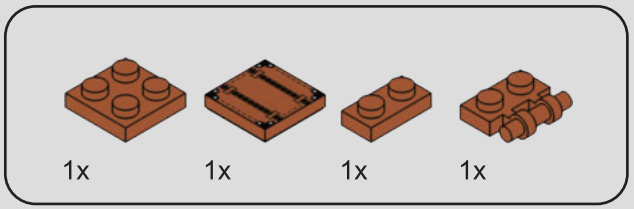

248

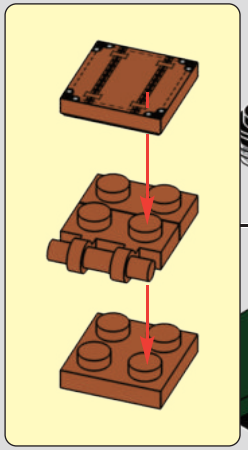

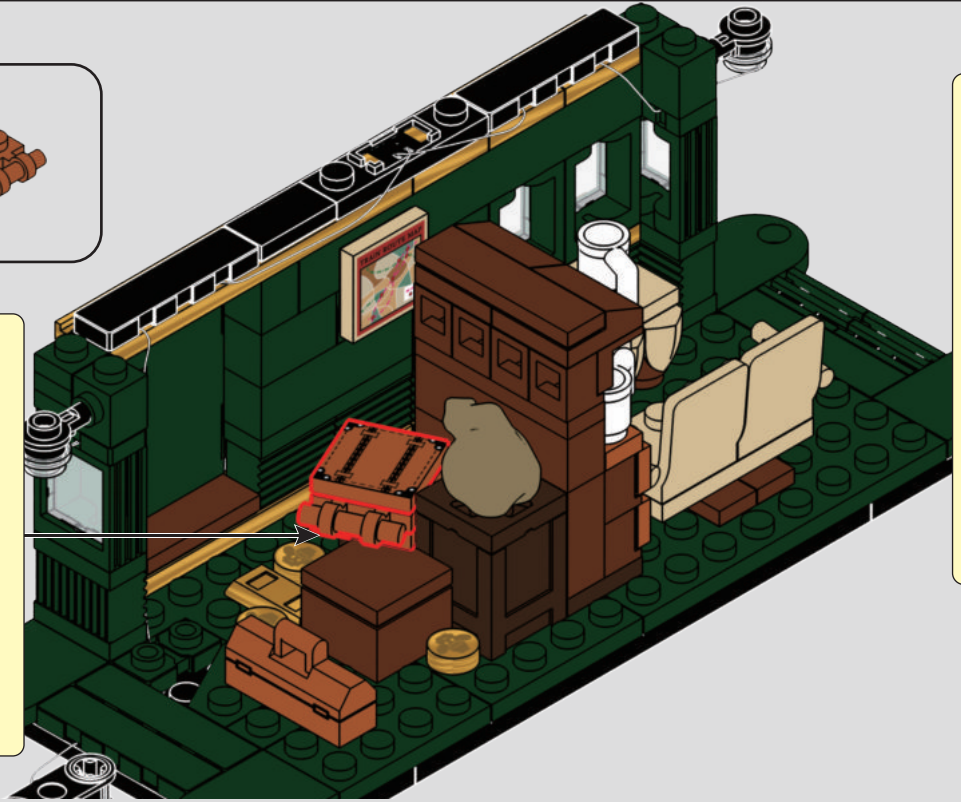

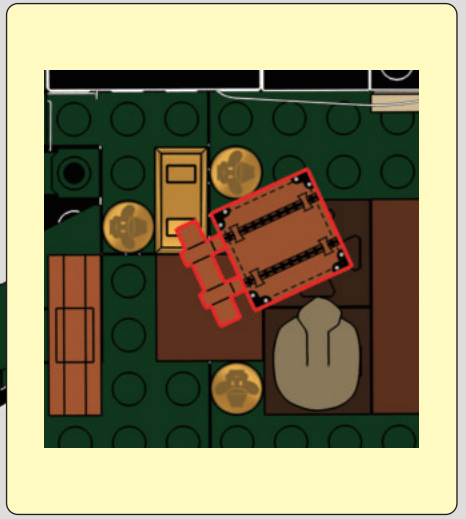

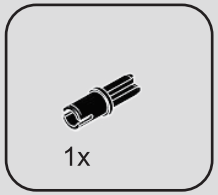

249

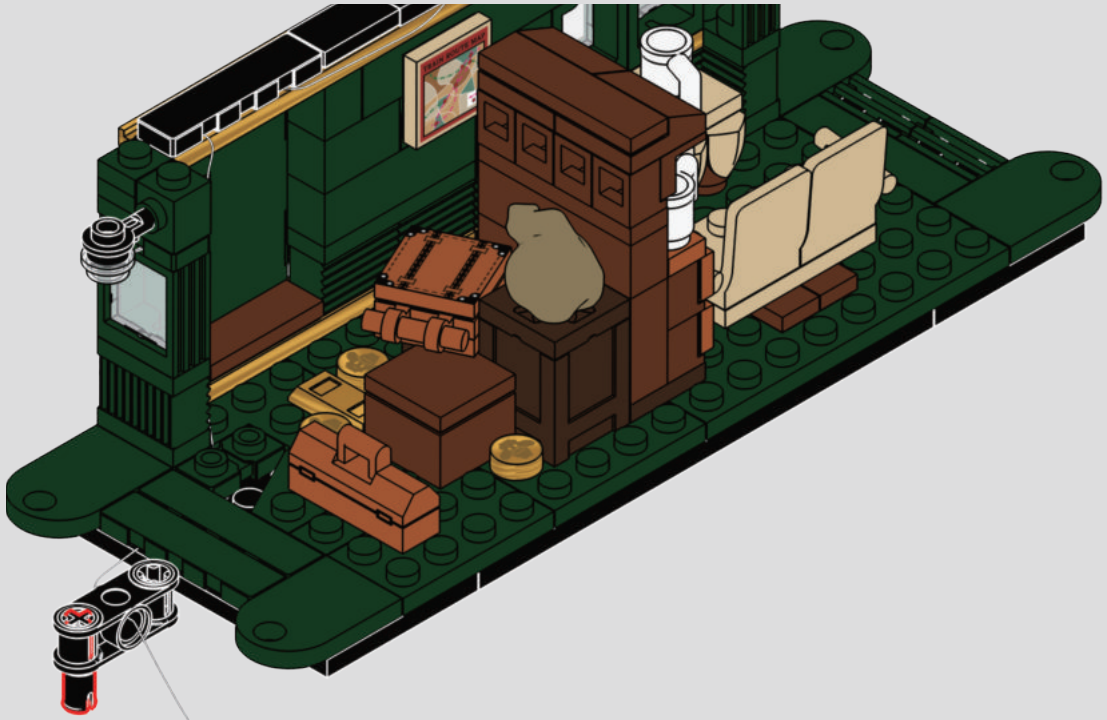

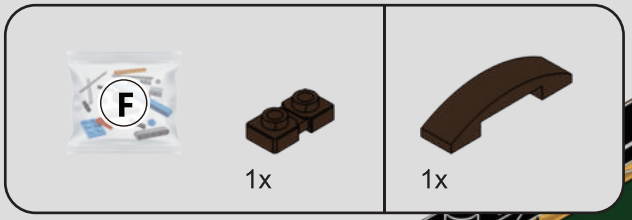

250

1

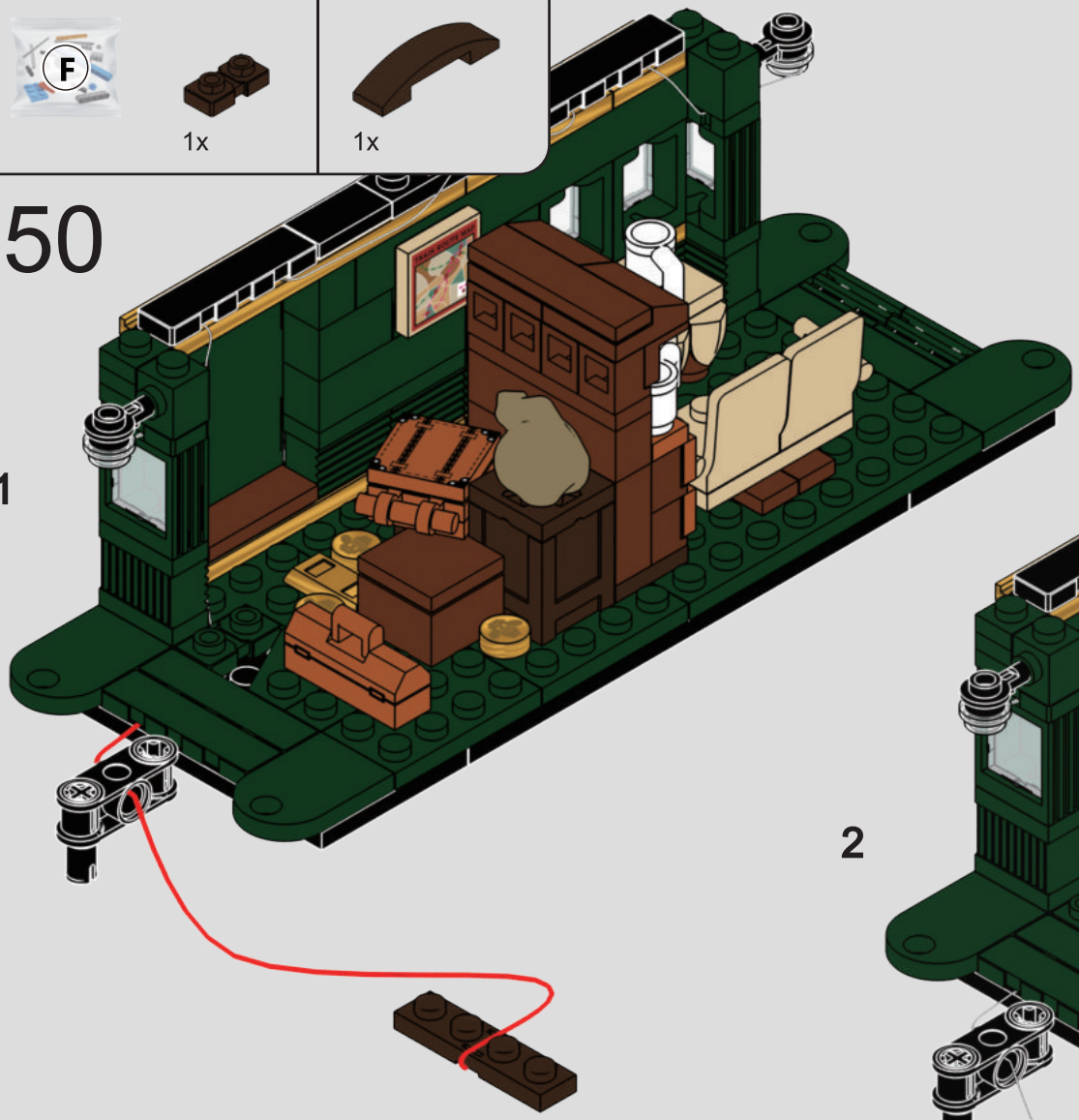

2

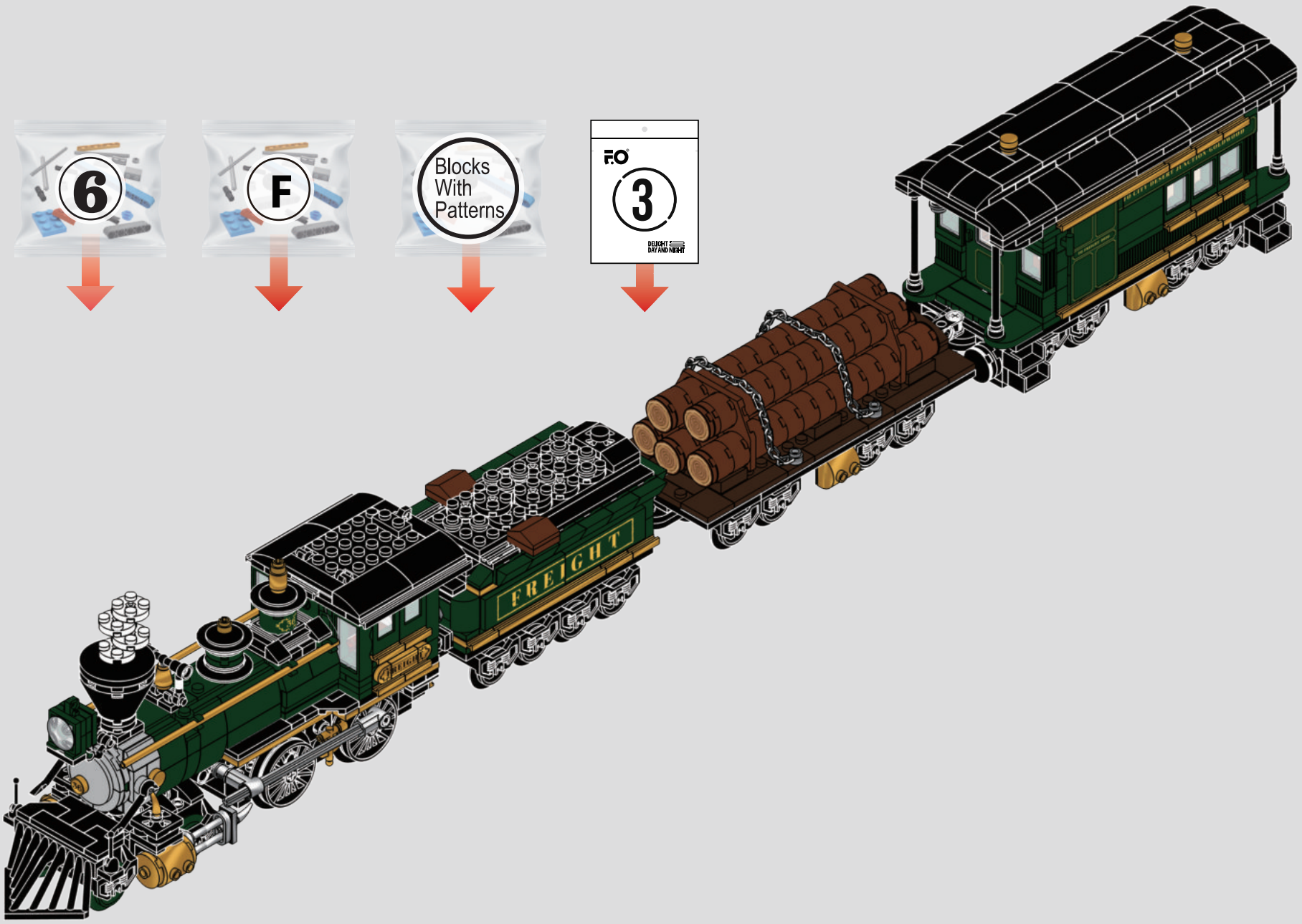
6
F
Blocks
With
Patterns
3
DELIGHT
DAY AND NIGHT
FREIGHT

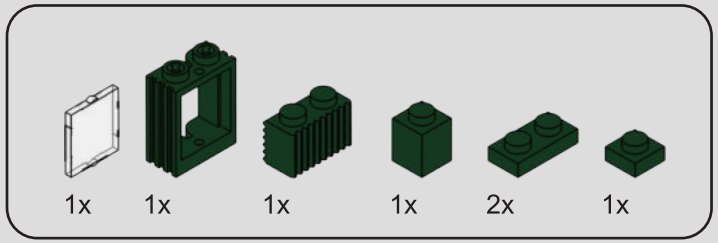

251

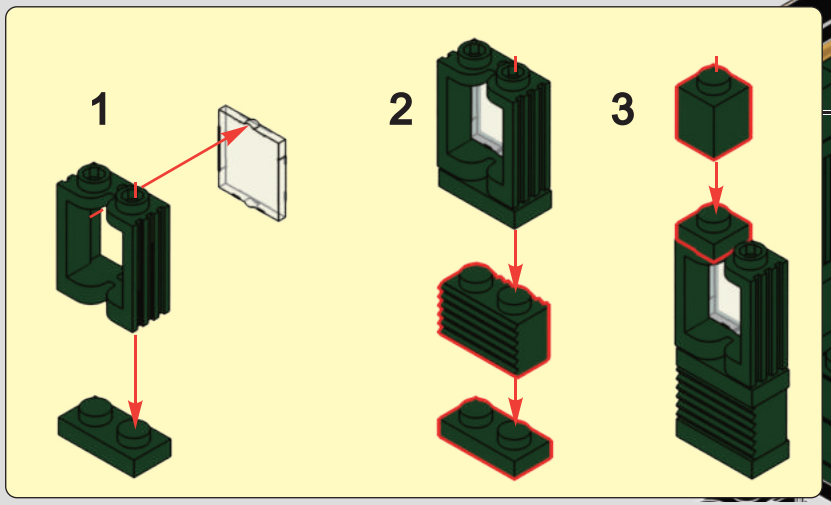

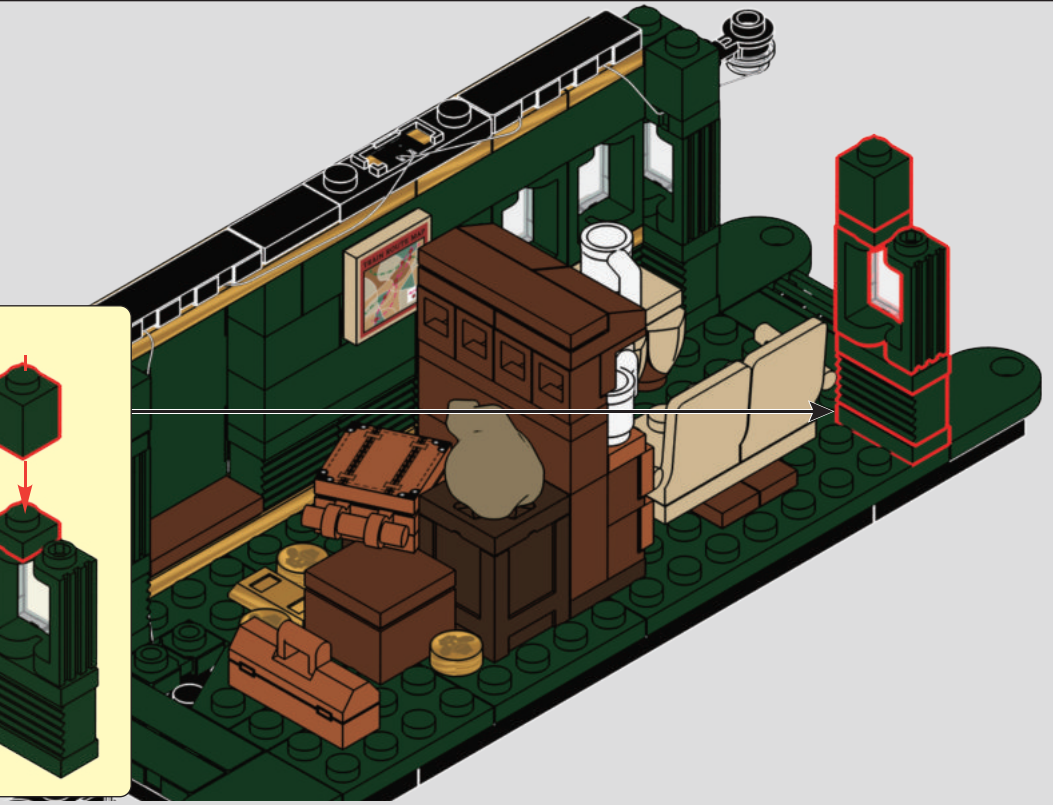

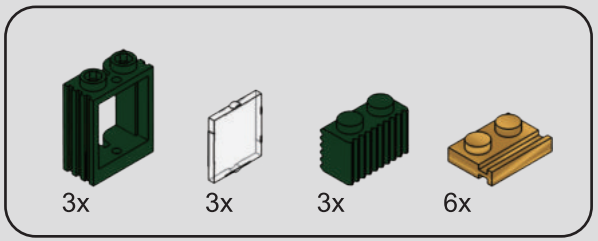

252

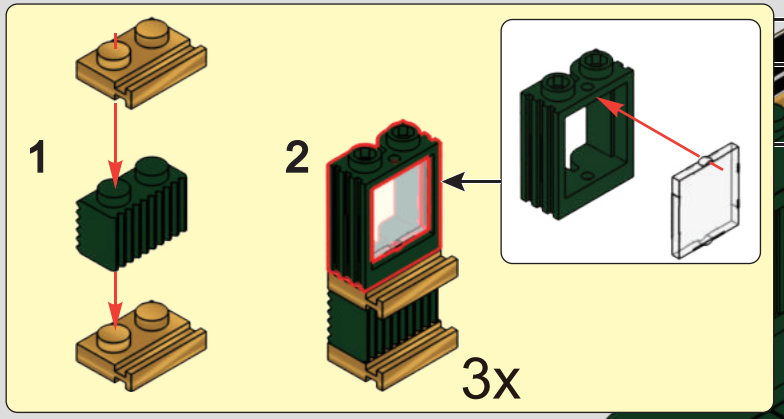

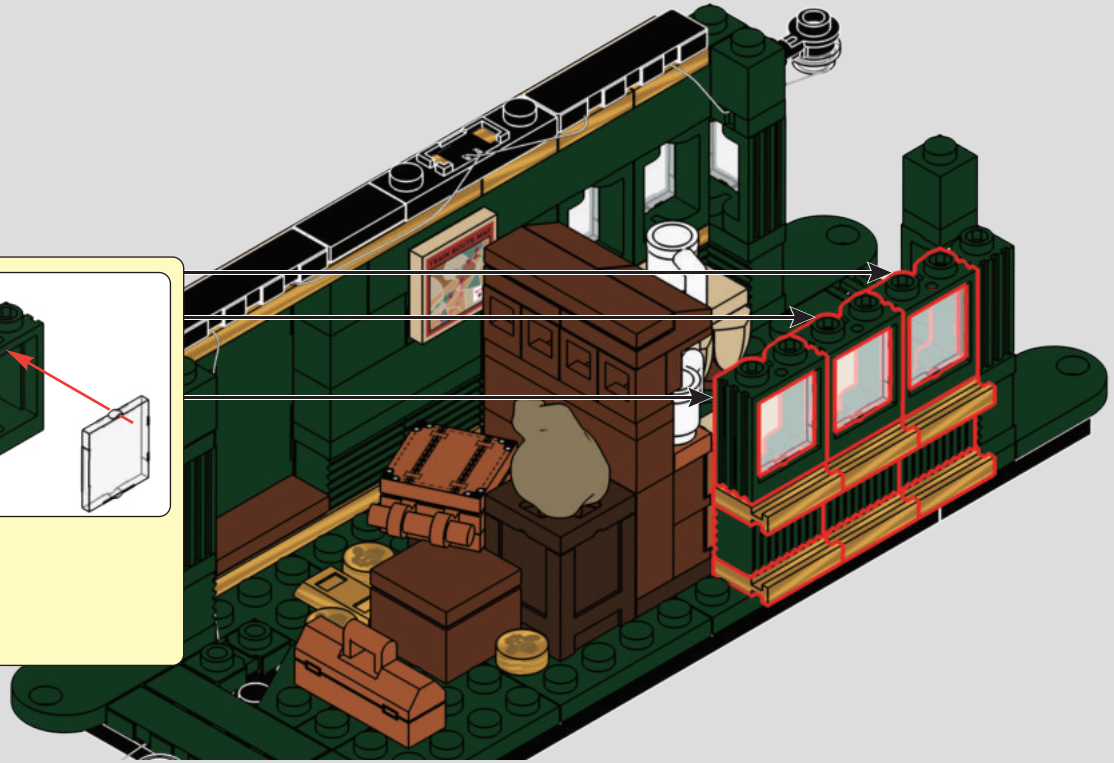

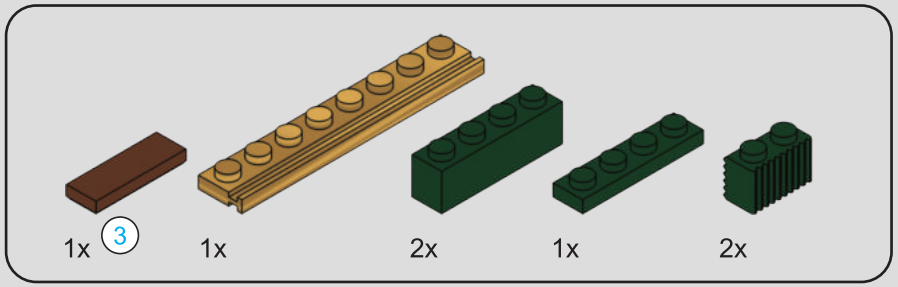

253

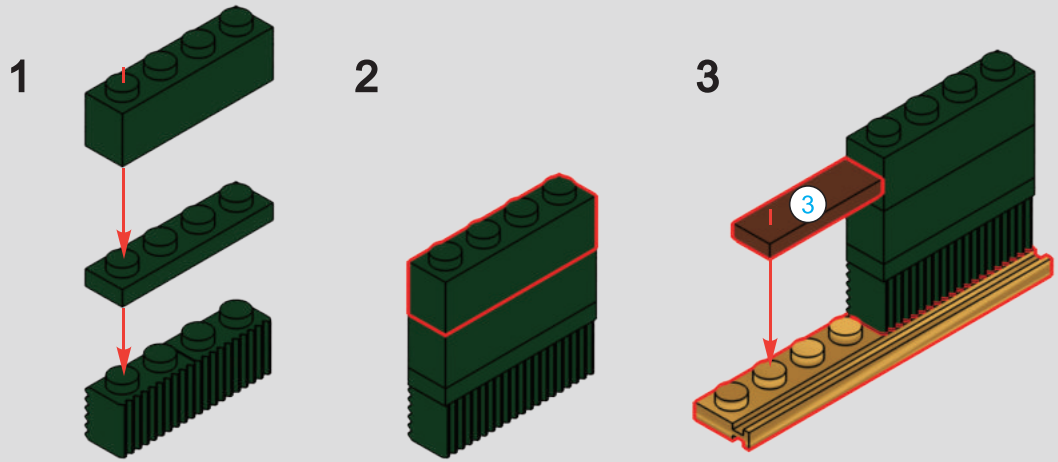

254

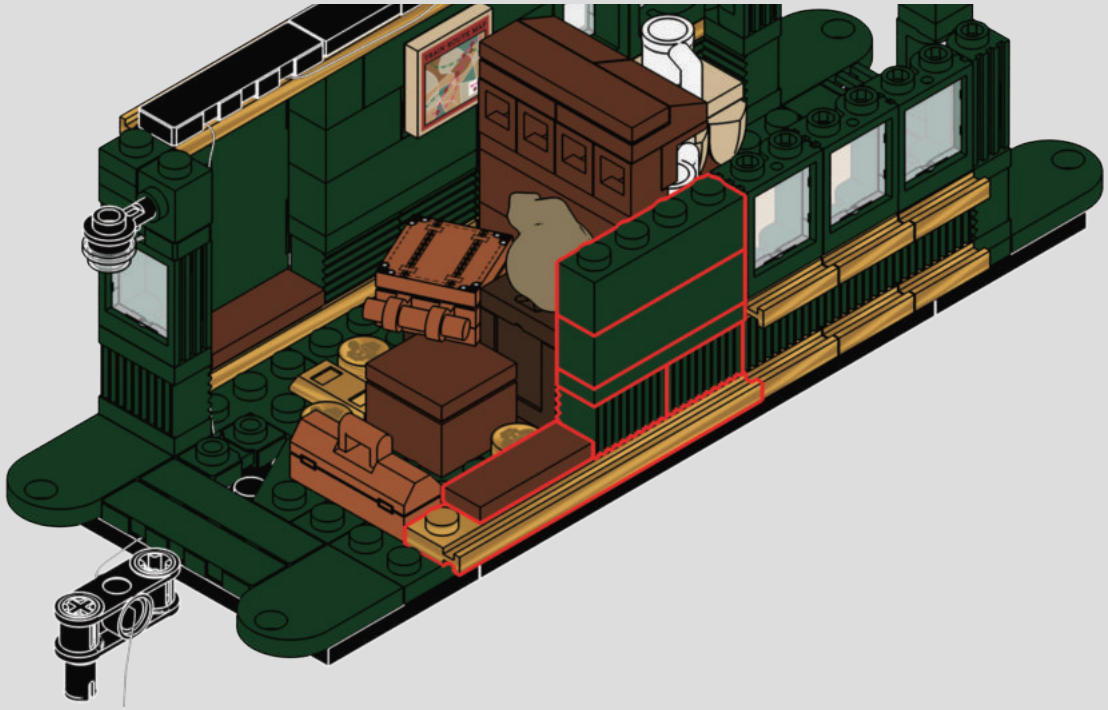

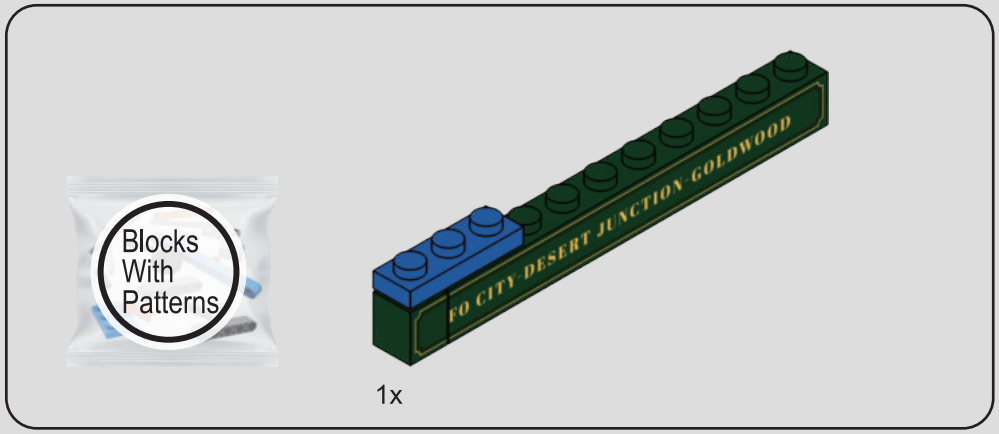
Blocks
With
Patterns
FO CITY-DESERT JUNCTION-GOLDWOOD
1x

255

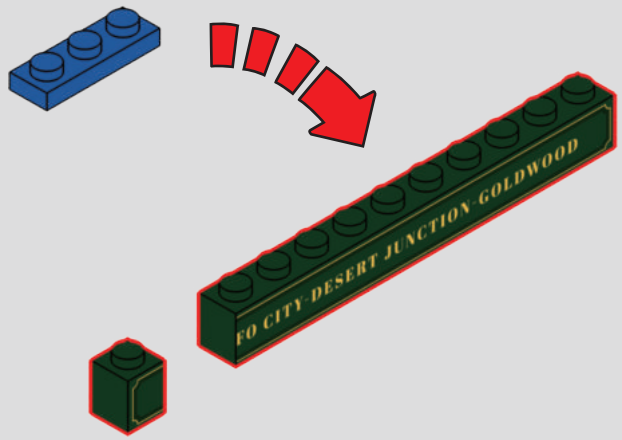
FO CITY-DESERT JUNCTION-GOLDWOOD

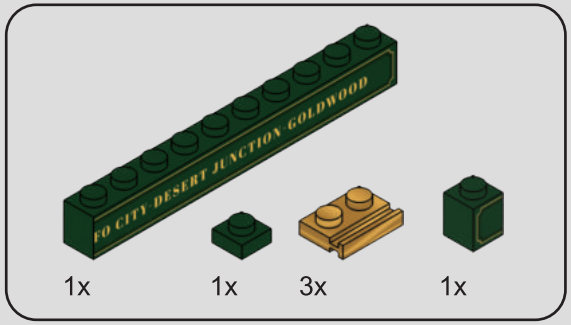
FO CITY-DESERT JUNCTION-GOLDWOOD
1x
1x
3x
1x

256

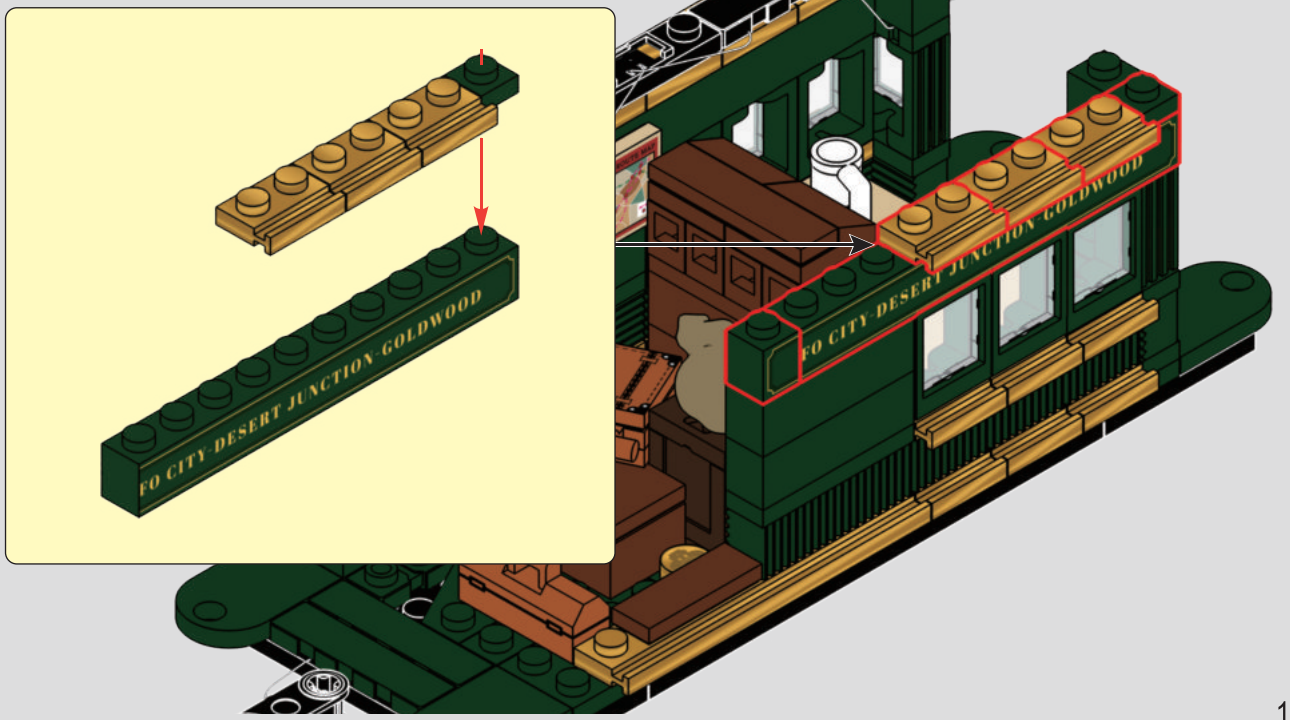
FO CITY-DESERT JUNCTION-GOLDWOOD
FO CITY-DESERT JUNCTION-GOLDWOOD

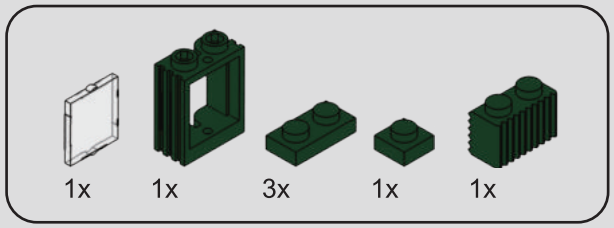

257

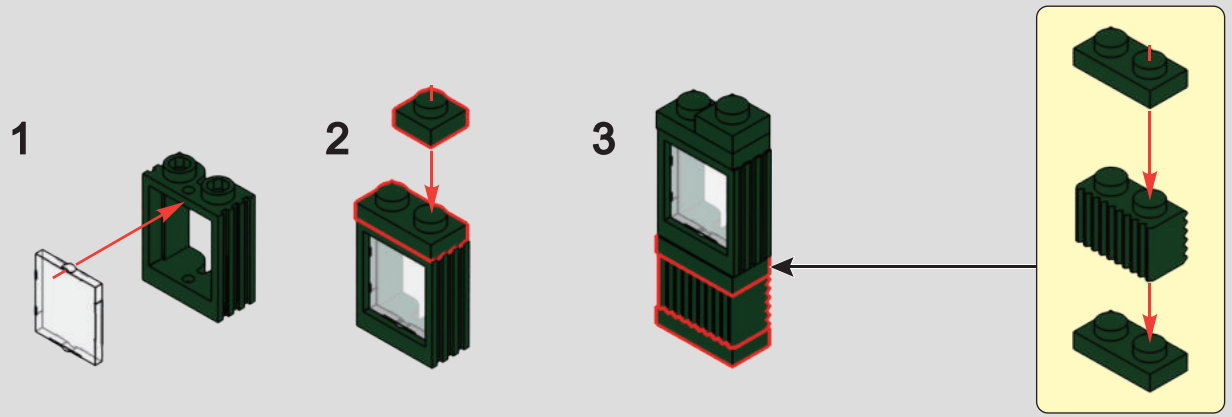

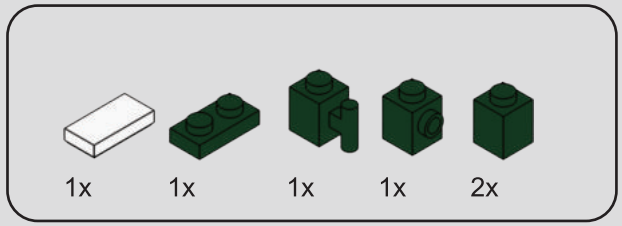

258

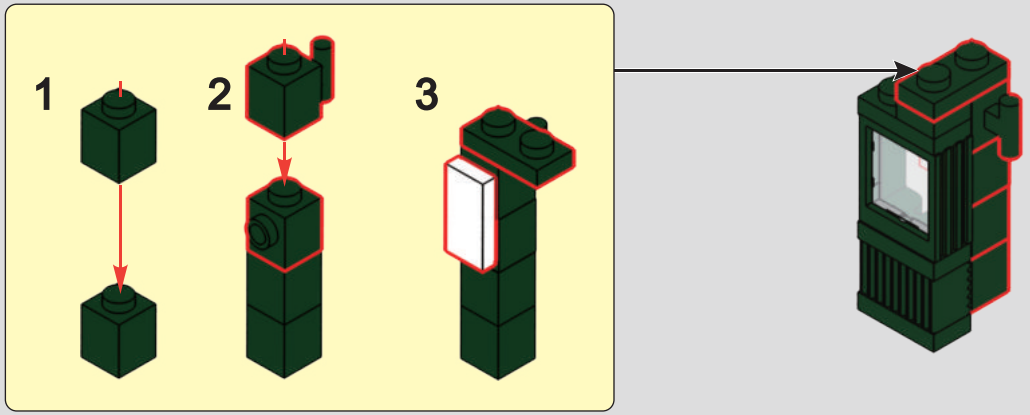

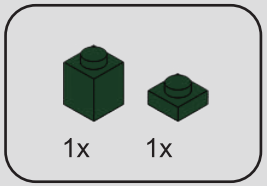

259

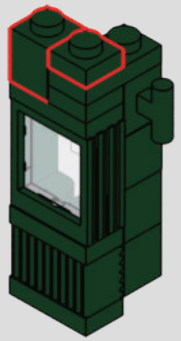

260

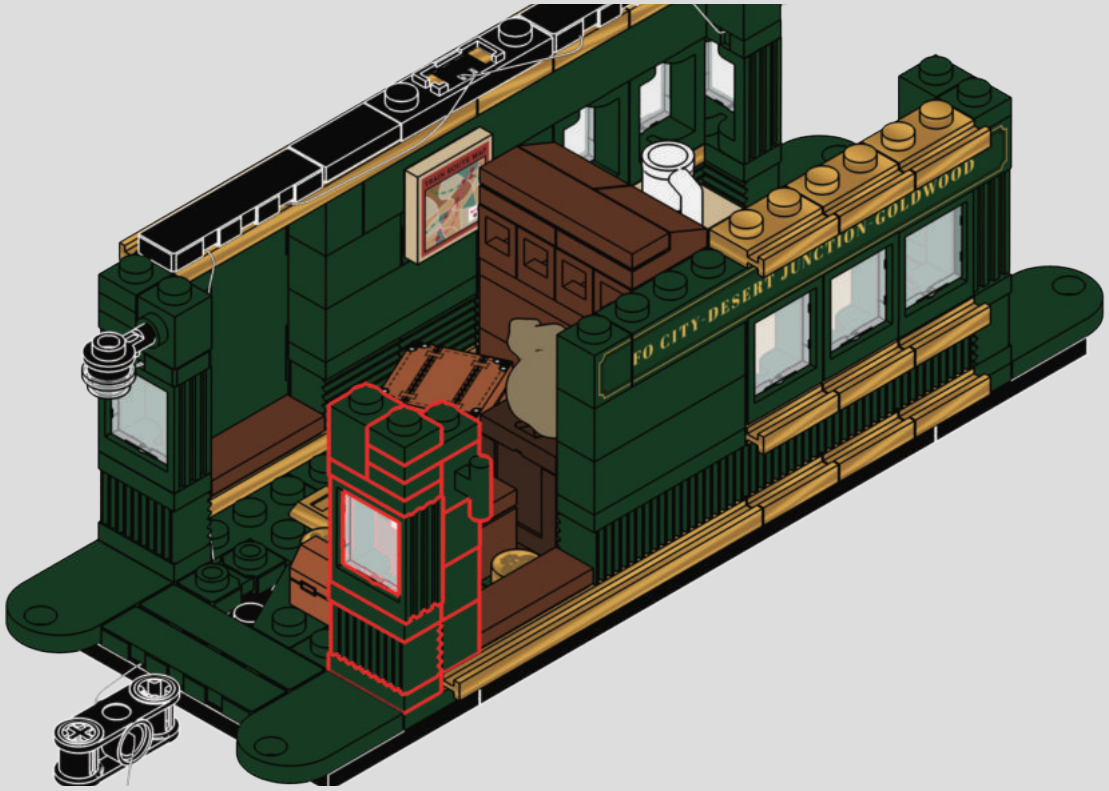

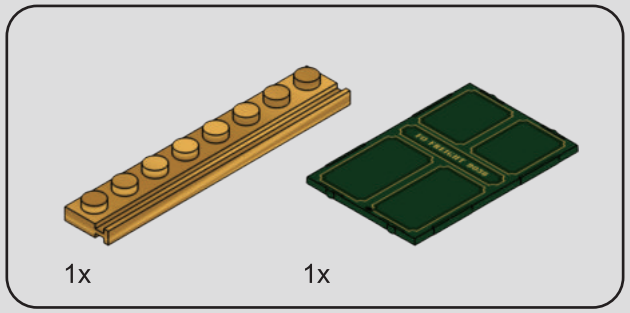

261

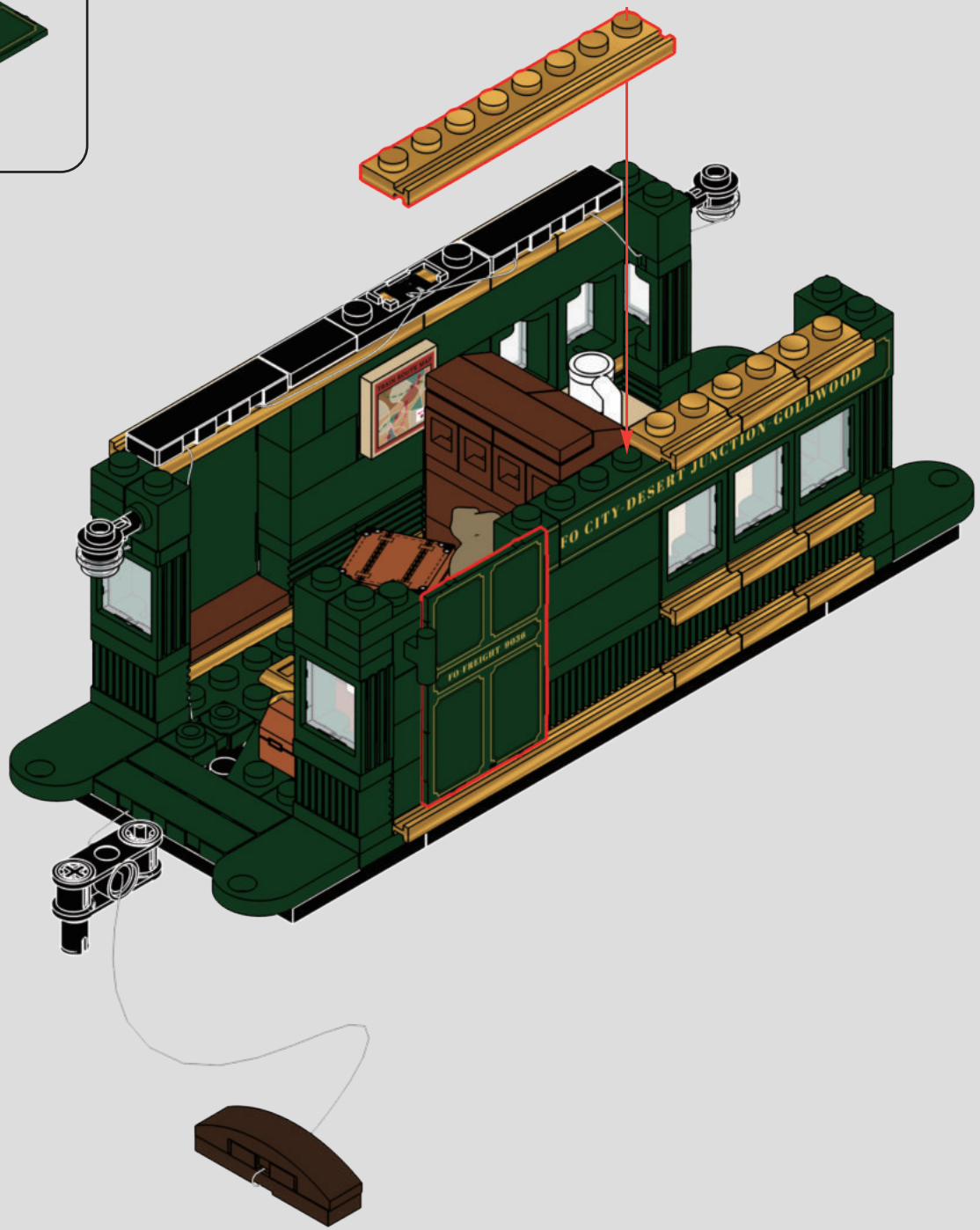

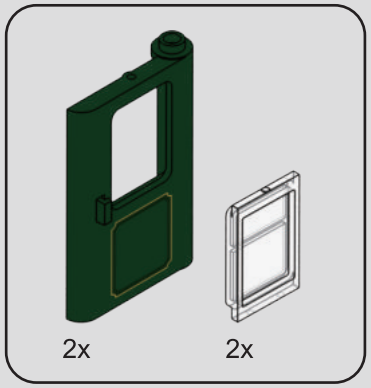
2x
2x

262

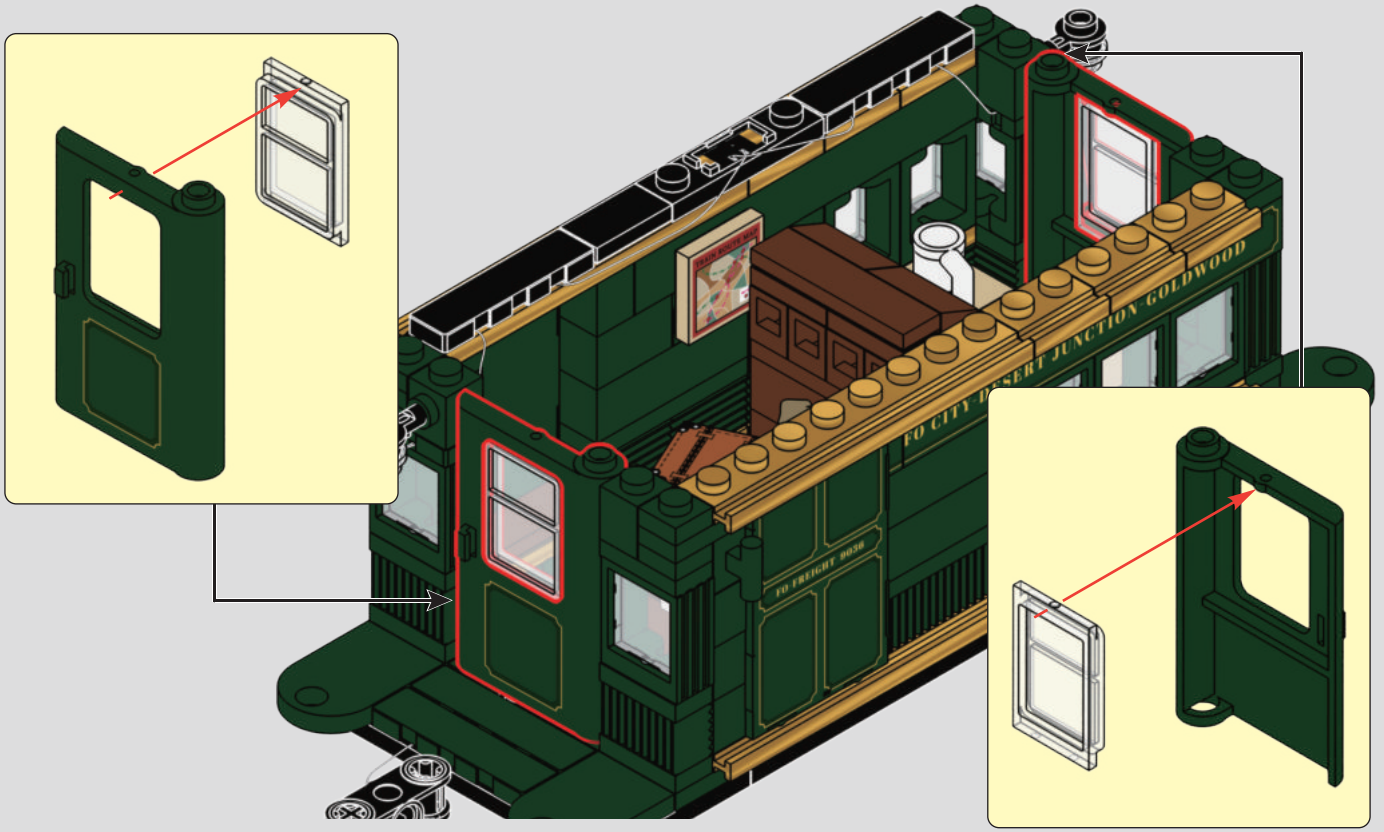
FO CITY-DESERT JUNCTION-GOLDWOOD
FO FREIGHT 0038

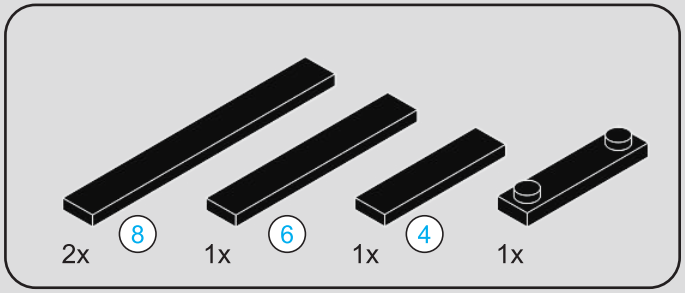
2x
8
1x
6
1x
4
1x

263

4 1:1
6 1:1
8 1:1

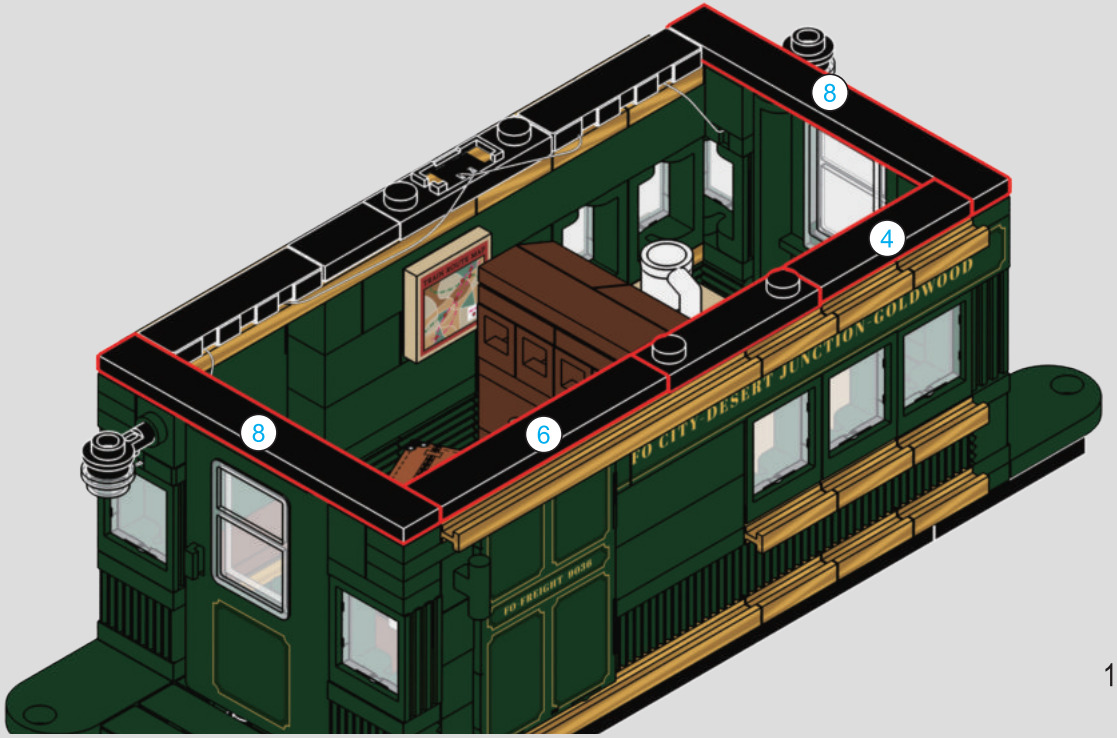
8
4
8
6
FO CITY-DESERT JUNCTION-GOLDWOOD
FO FREIGHT 0038

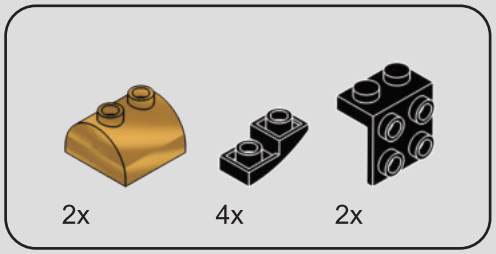

264

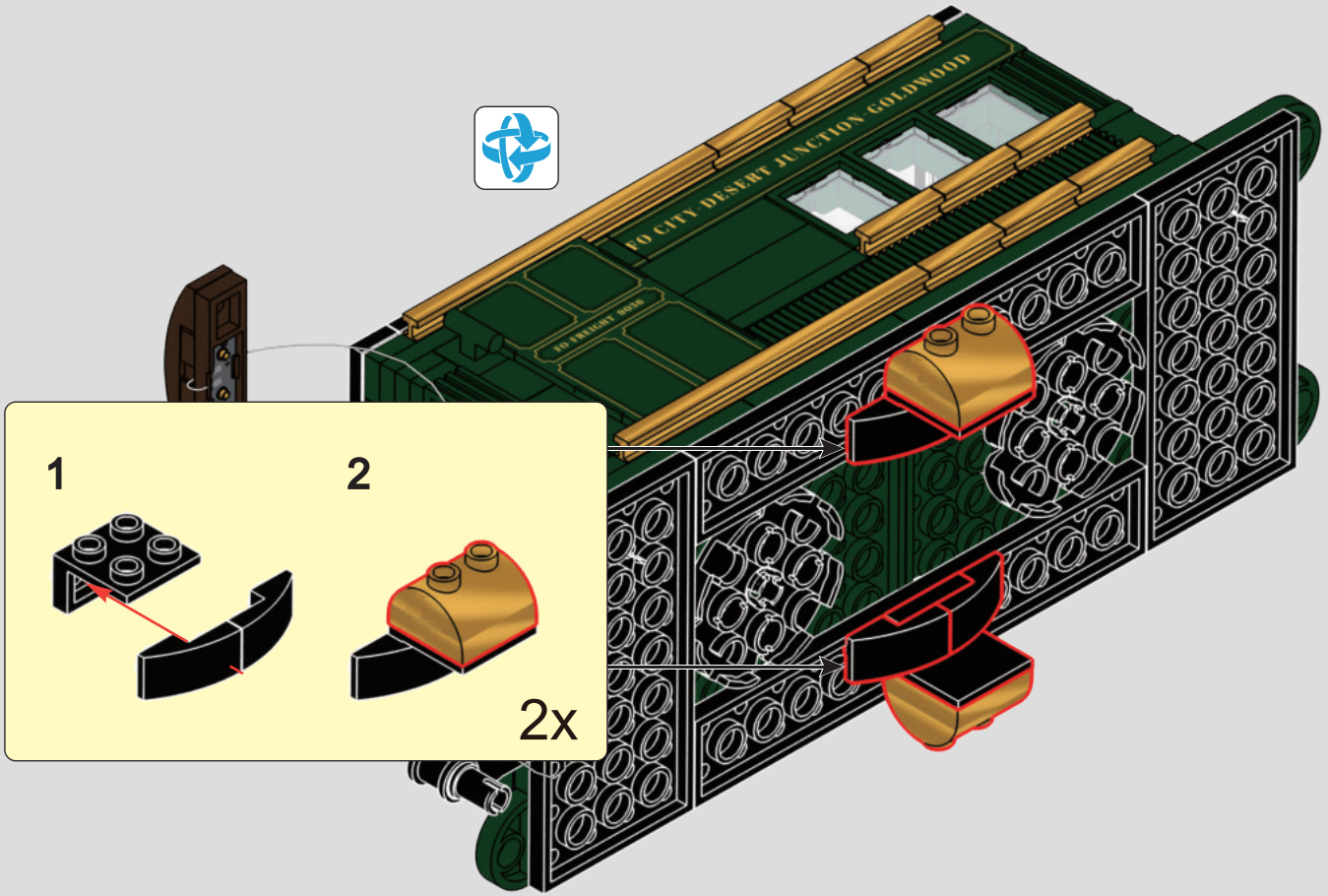

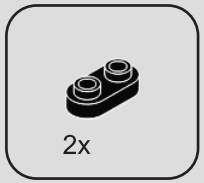

265

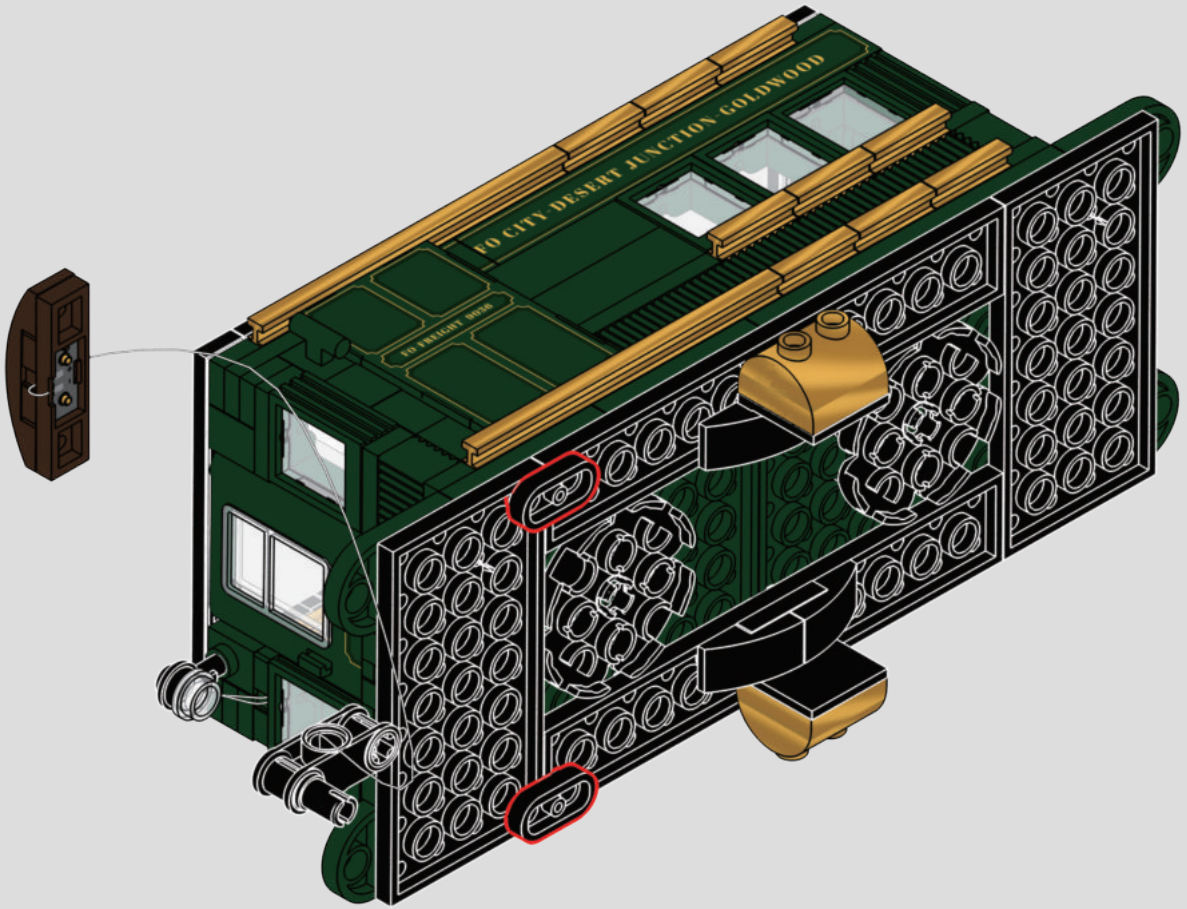

271-274

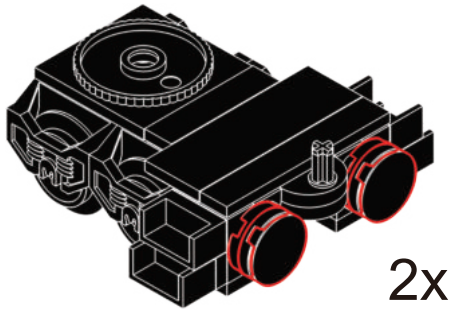

2x

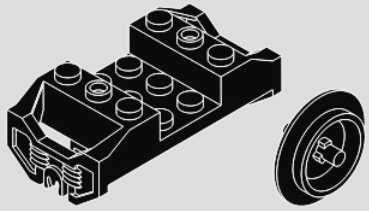

4x 8x

266

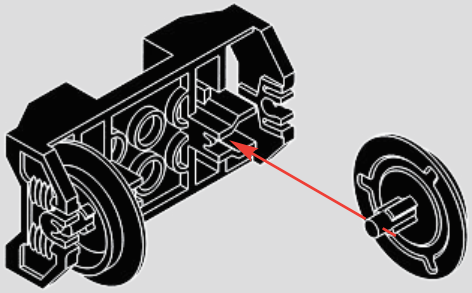

2x

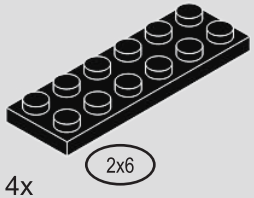

4x

267

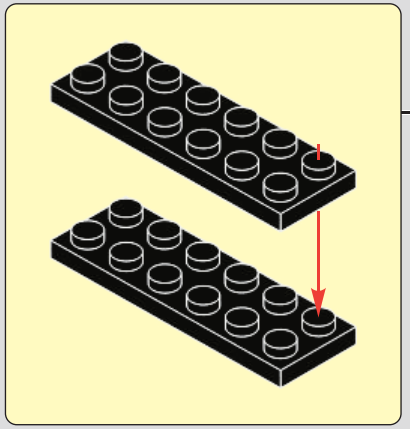

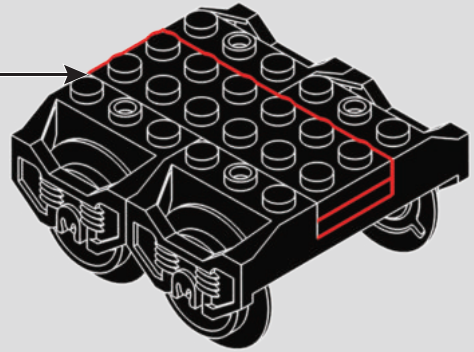

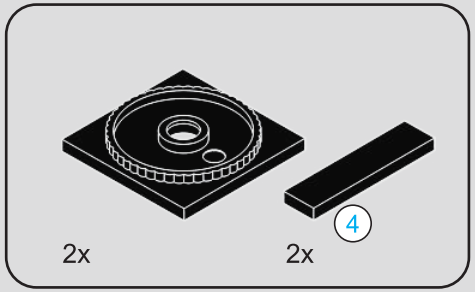

268

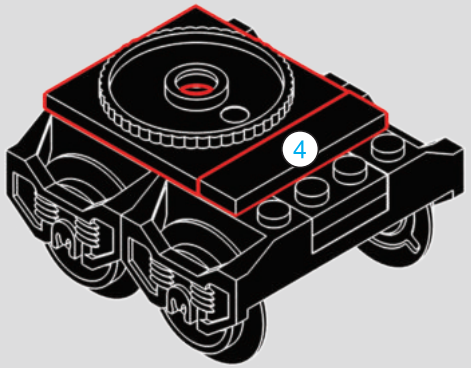

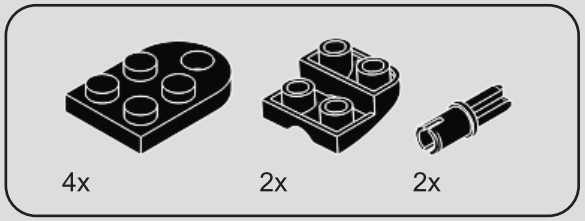

269

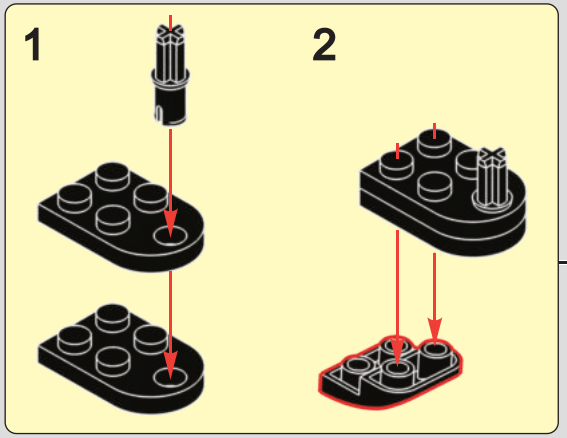

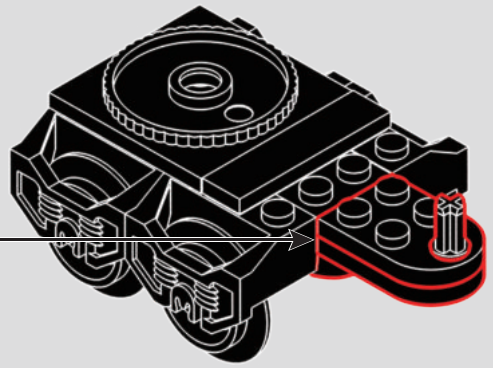

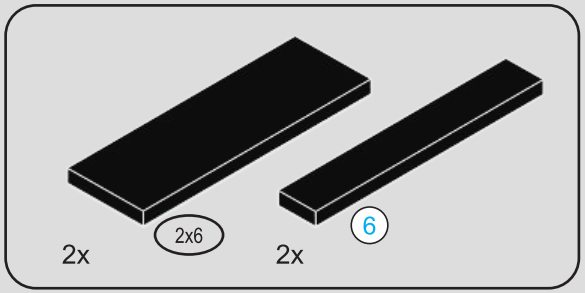

270

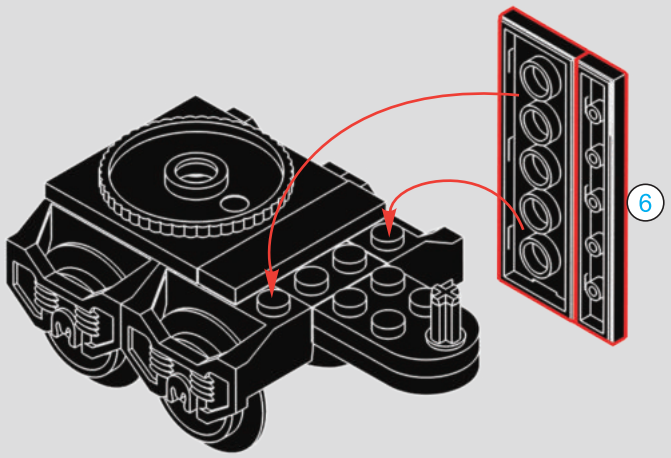

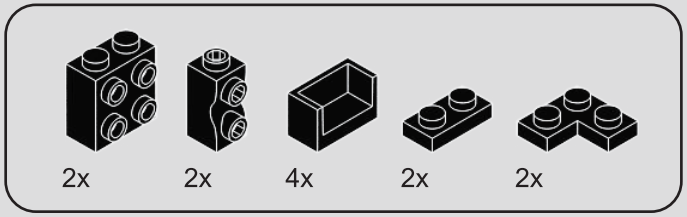

271

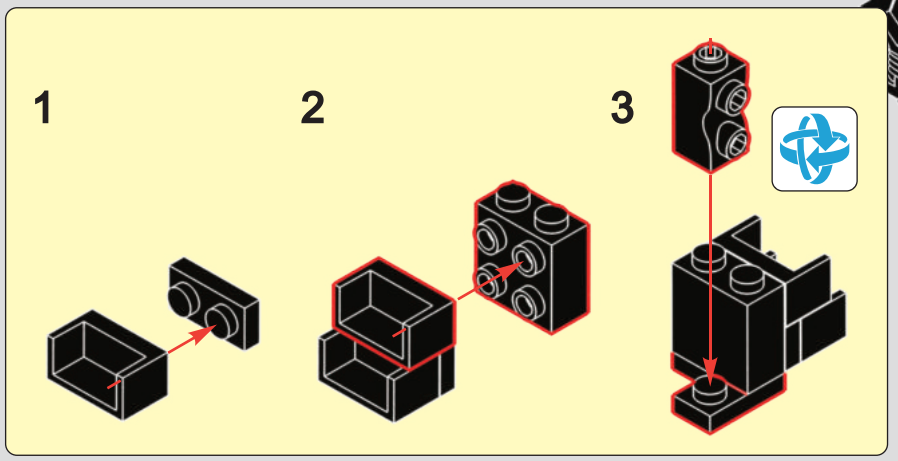

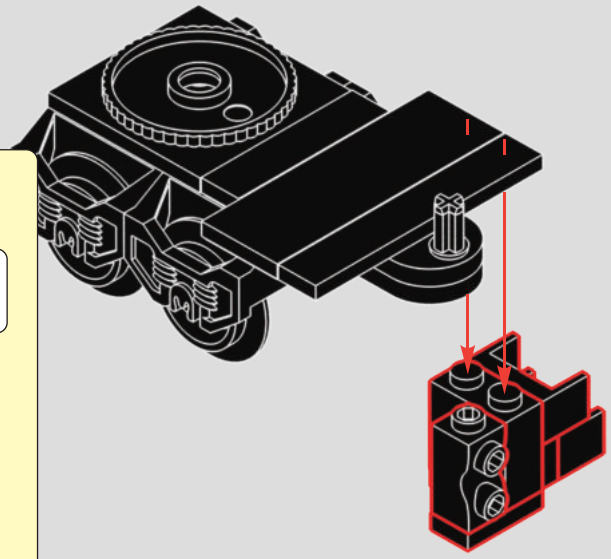

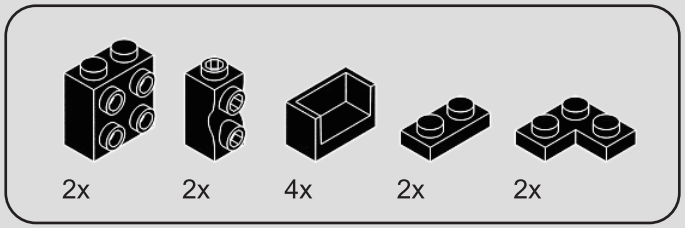

272

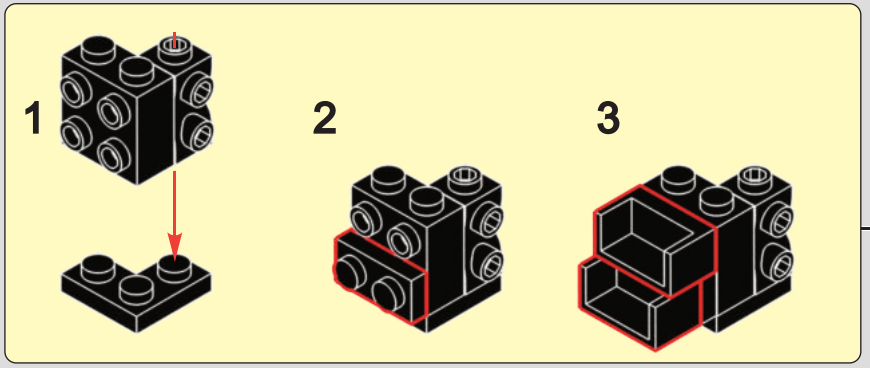

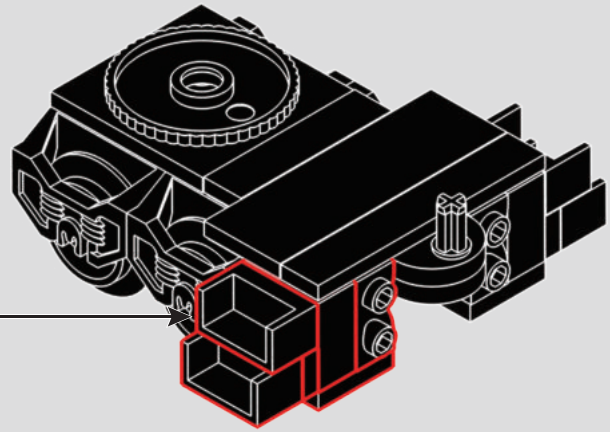

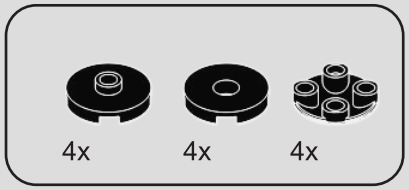

273

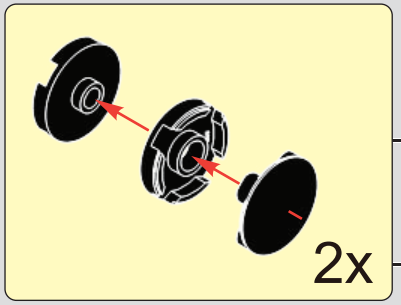

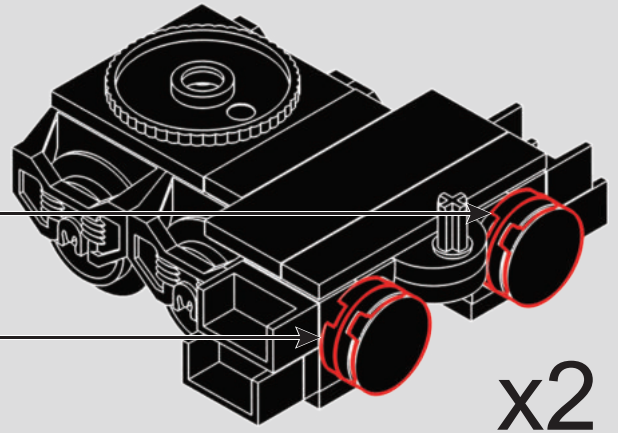

274

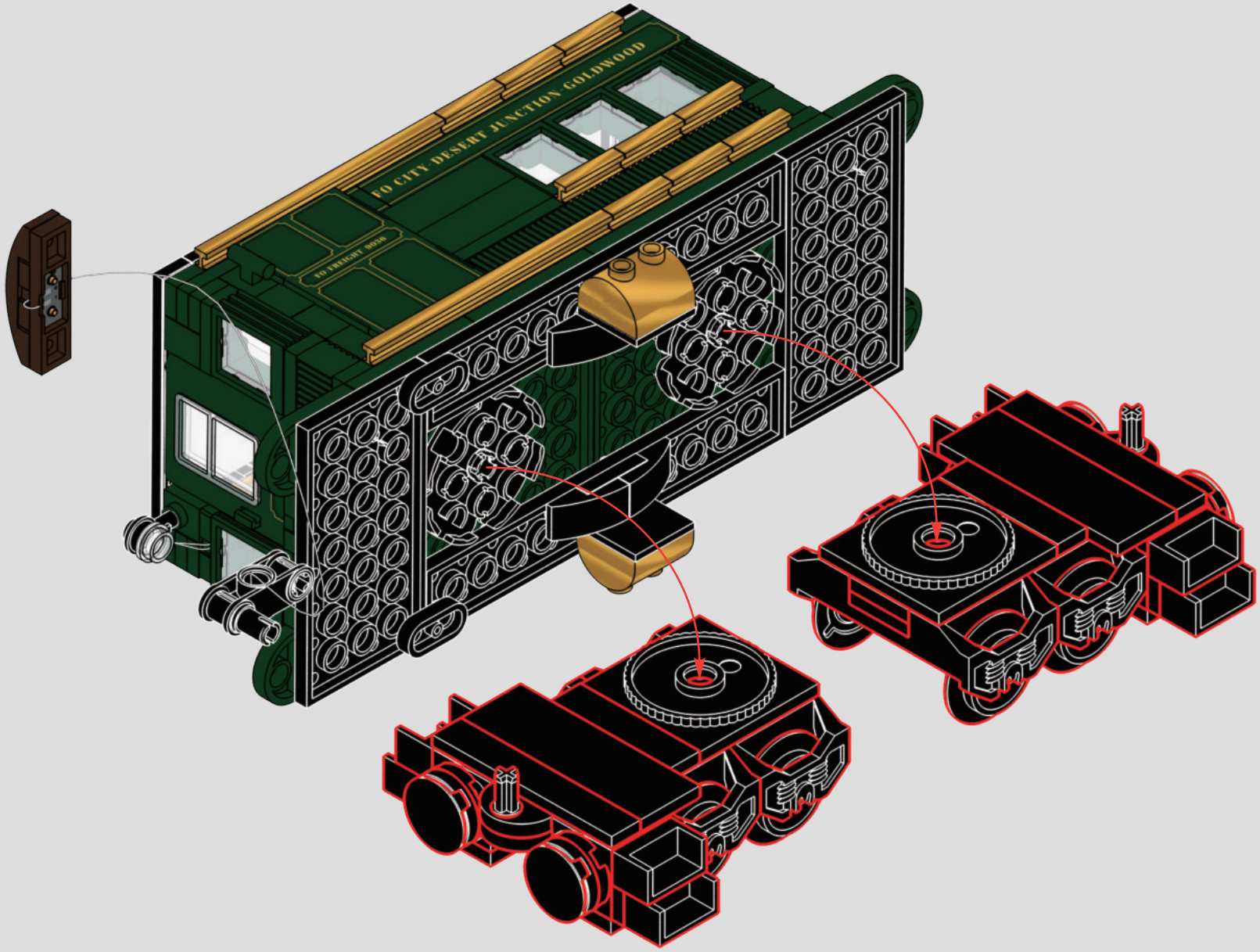

275

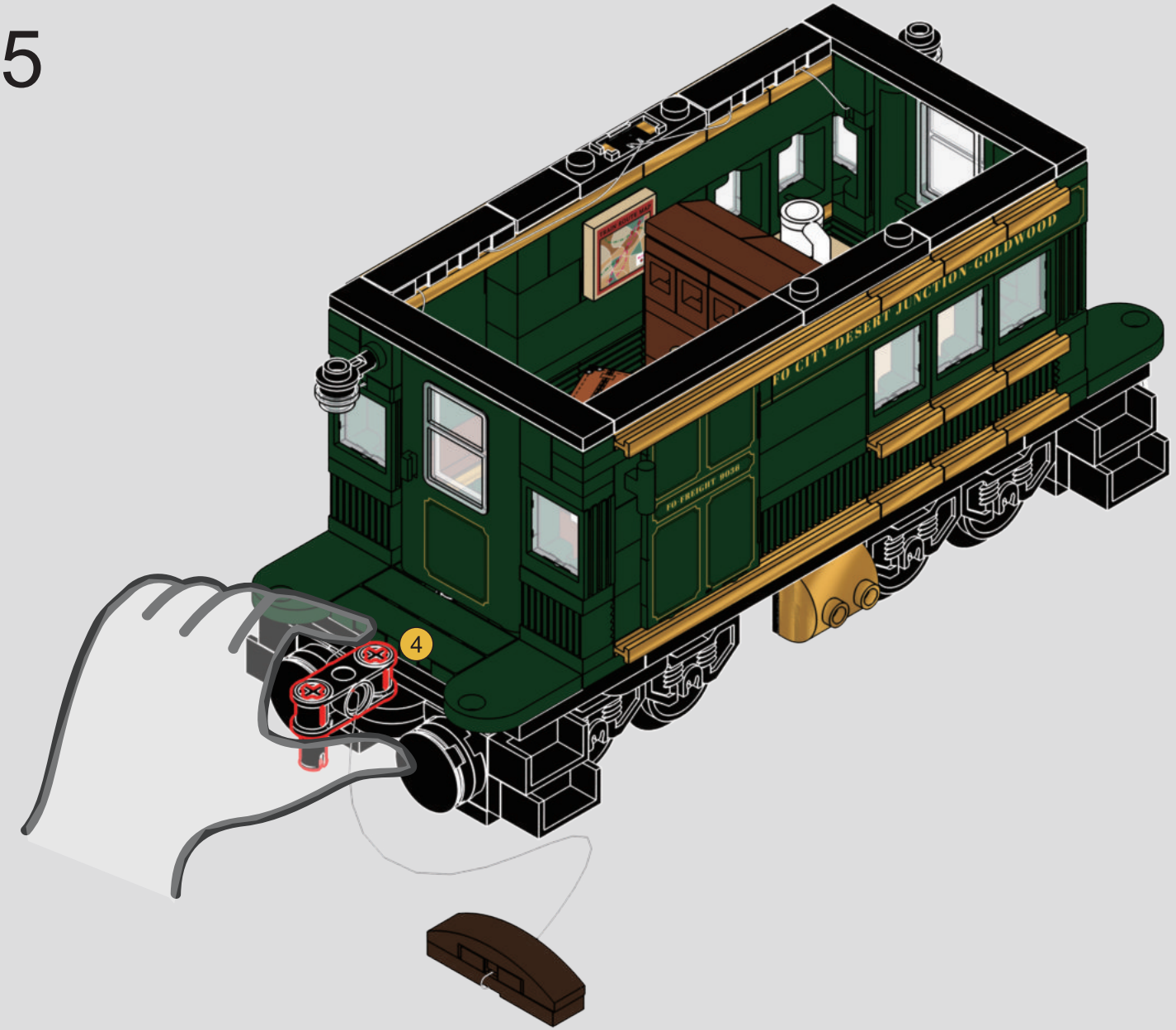

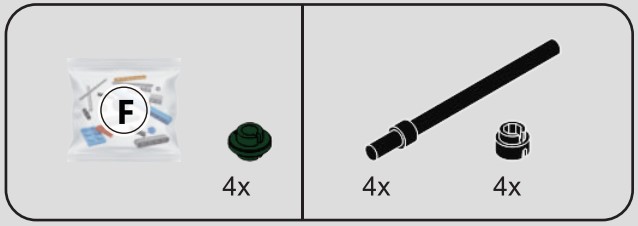

276

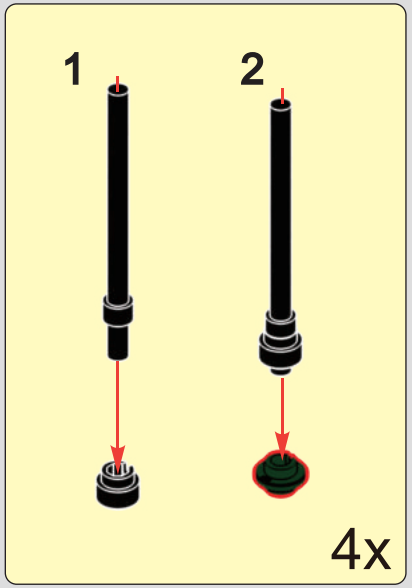

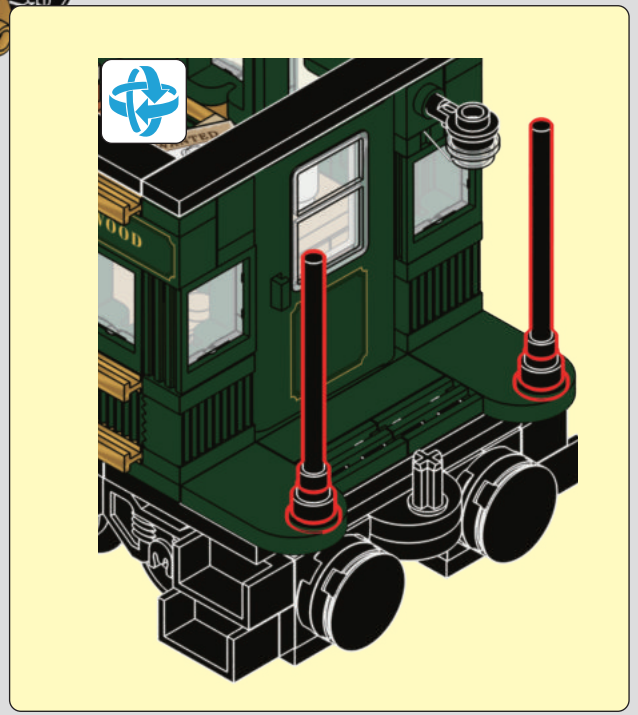

277

1

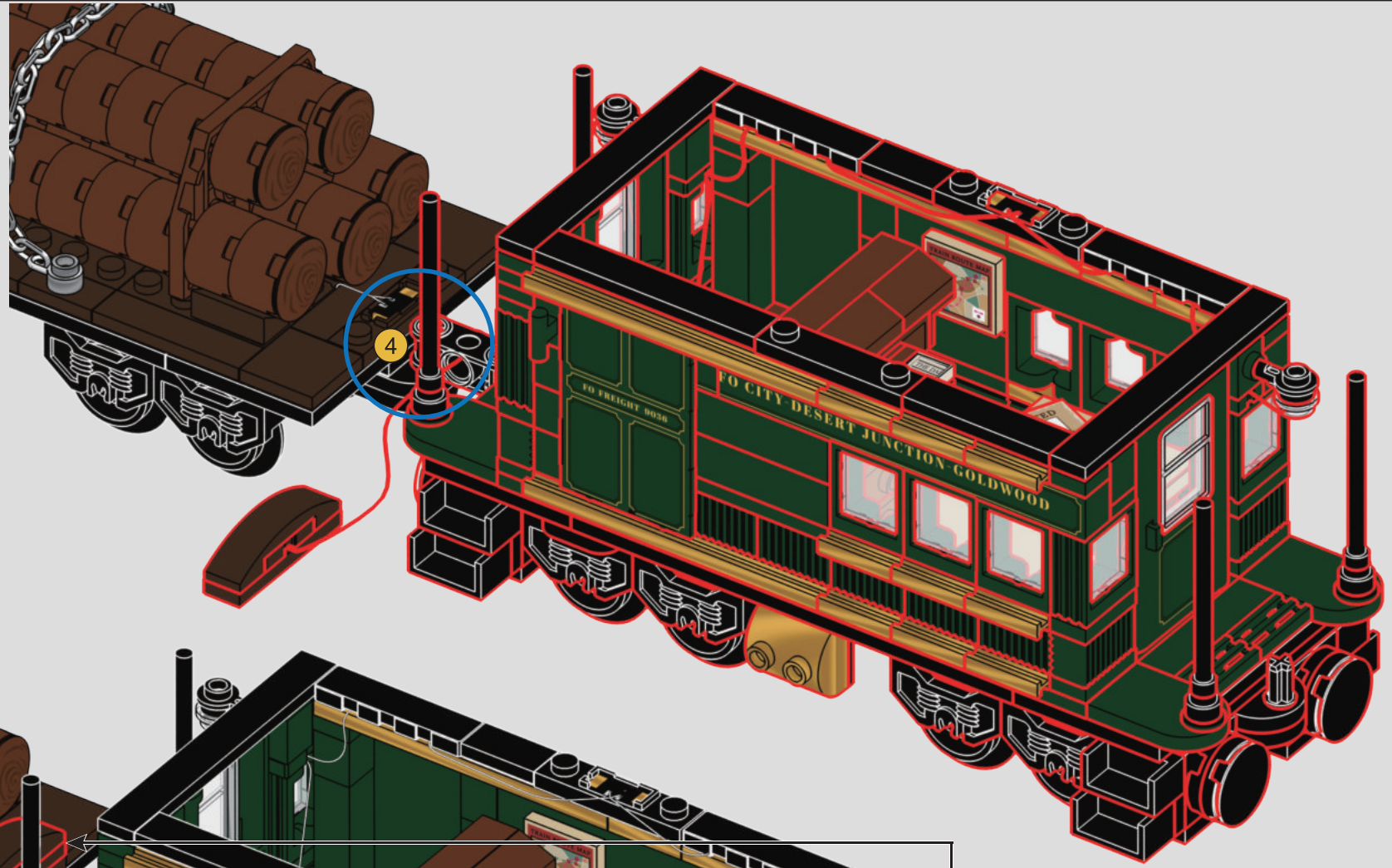
4
FO CITY-DESERT JUNCTION-GOLDWOOD
FO FREIGHT 9036

2

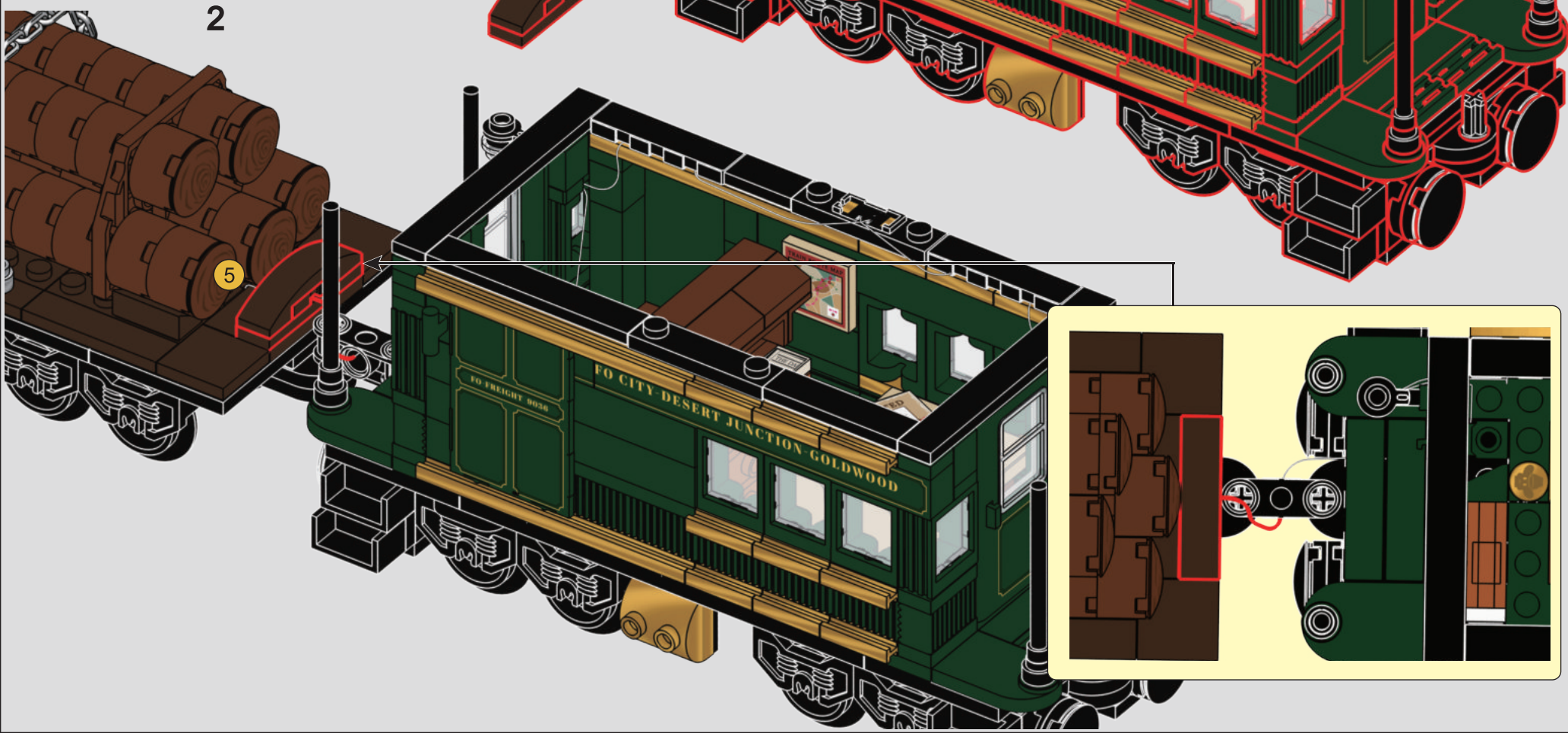
5
FO CITY-DESERT JUNCTION-GOLDWOOD
FO FREIGHT 9036

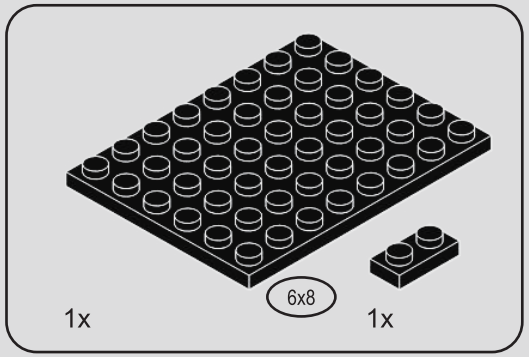

278

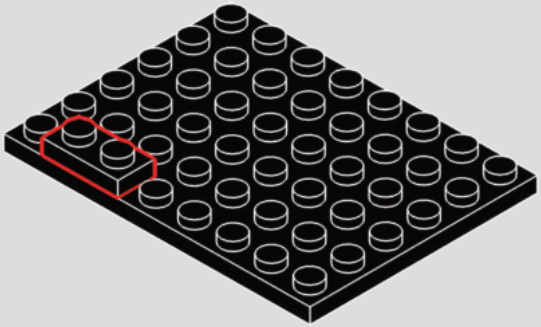

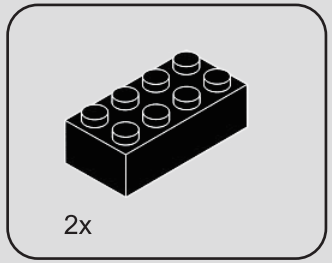

279

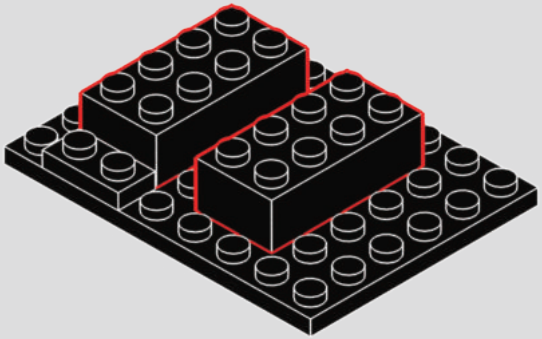

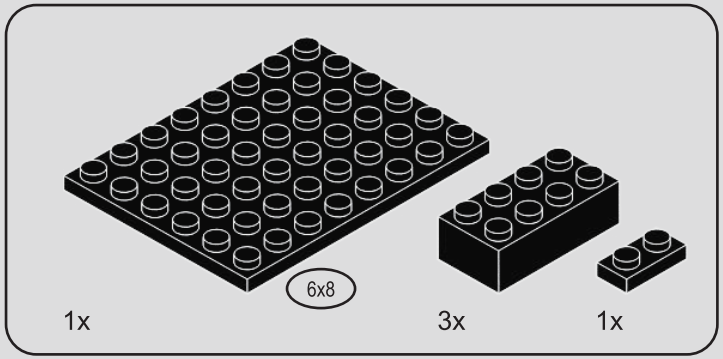

280

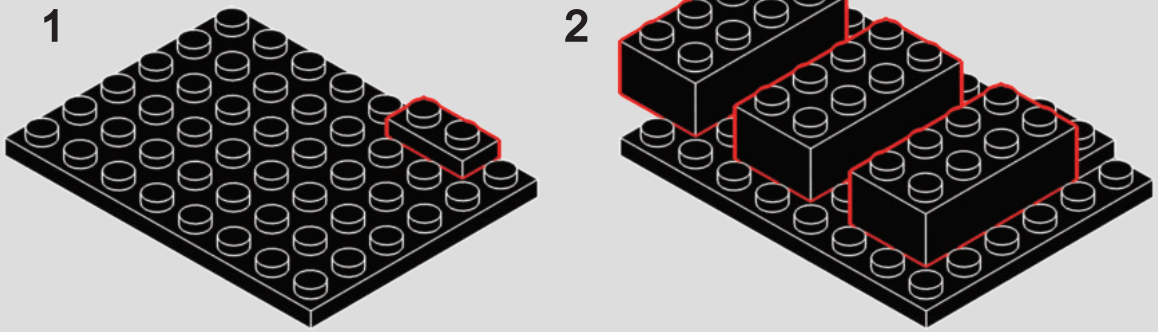

281

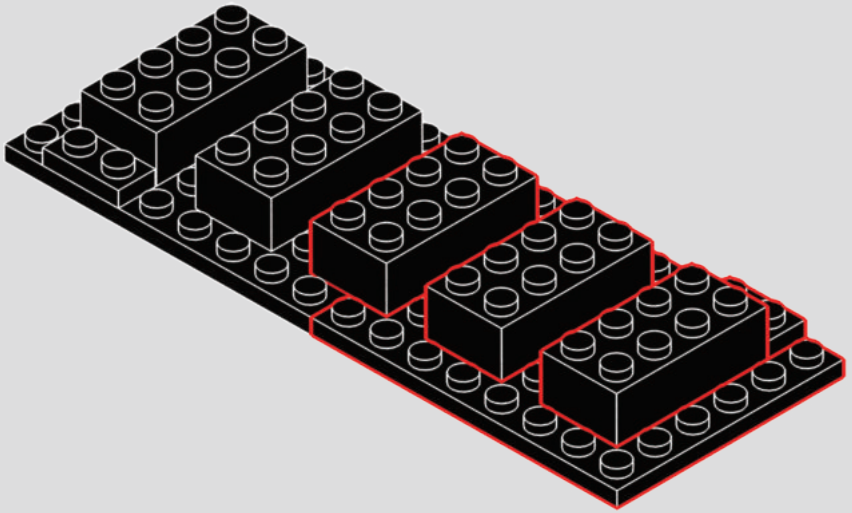

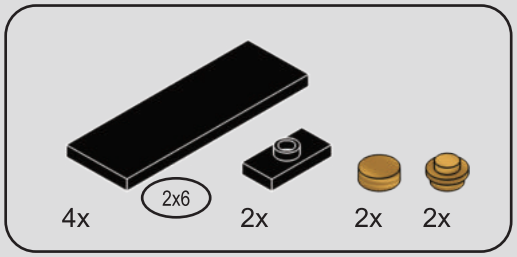

282

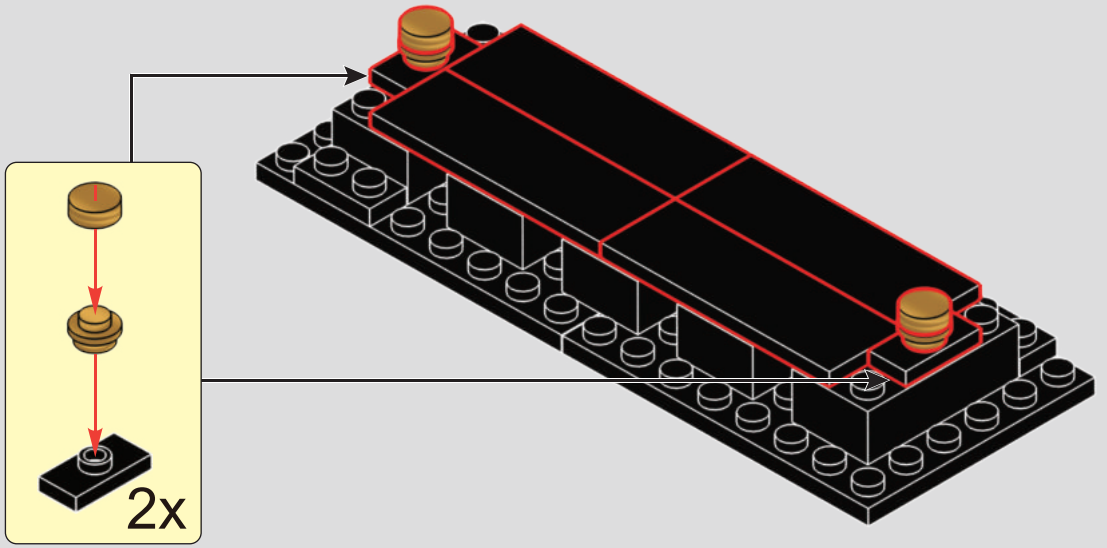

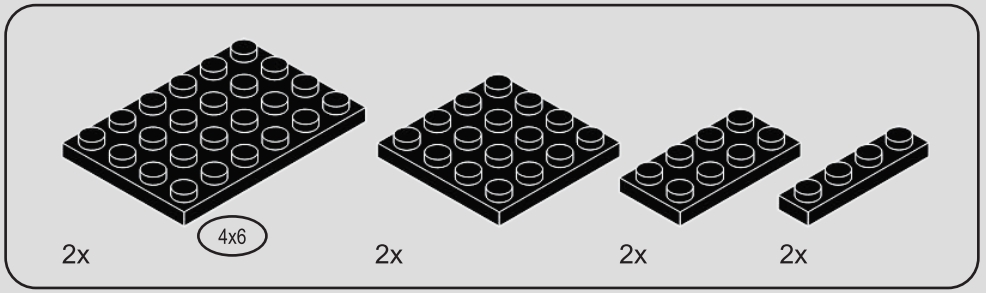

283

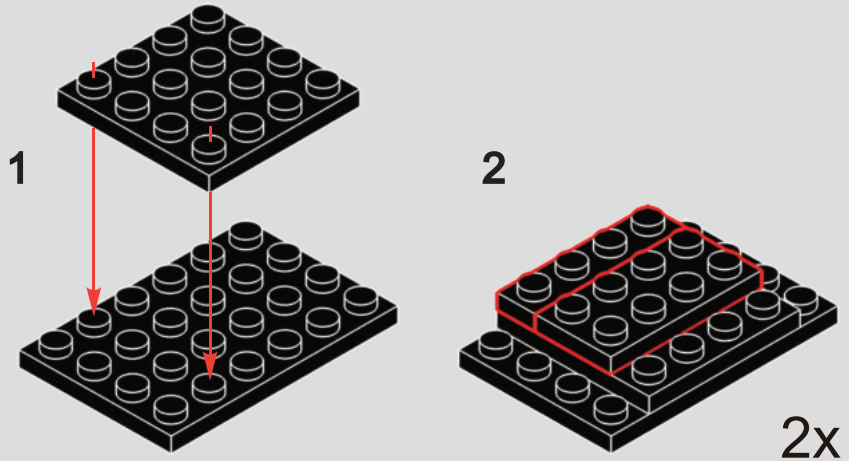

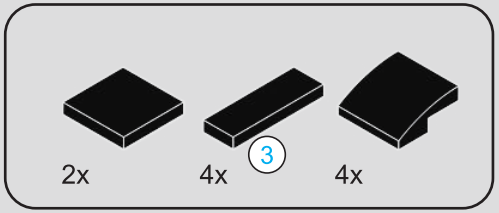

284

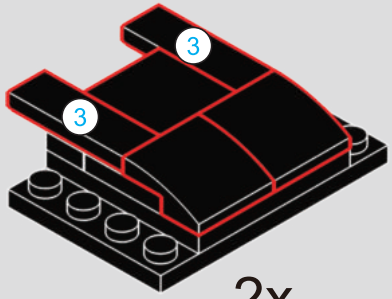

2x

285

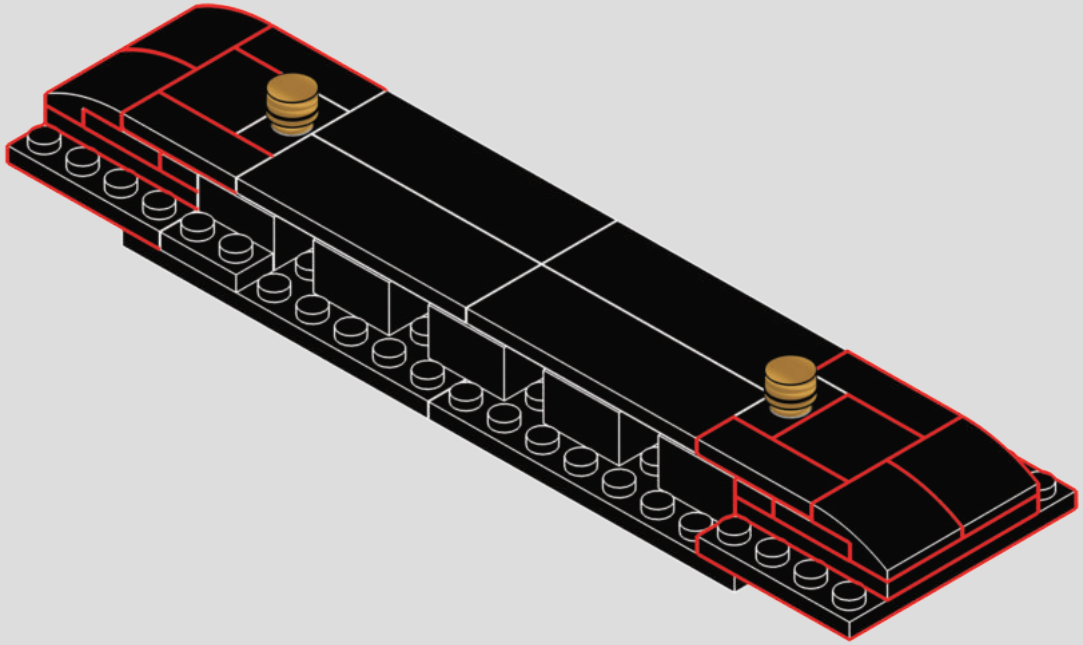

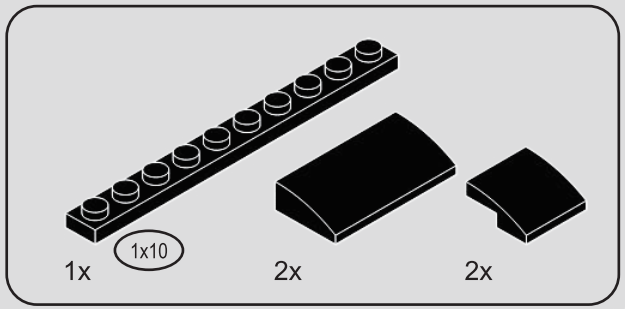

286

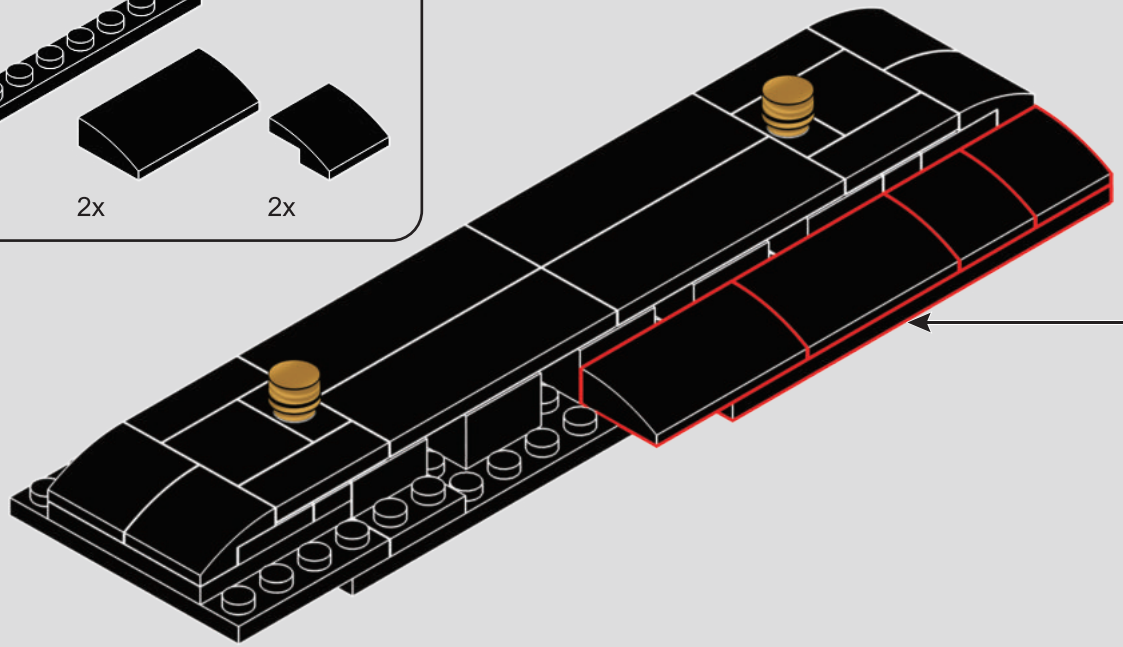

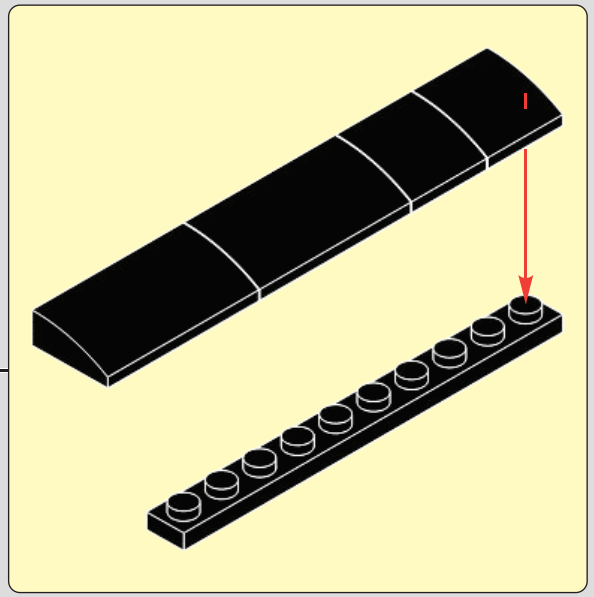

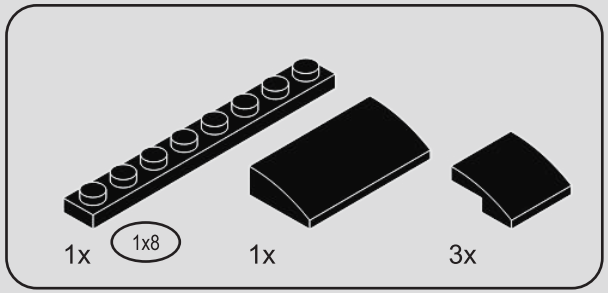

287

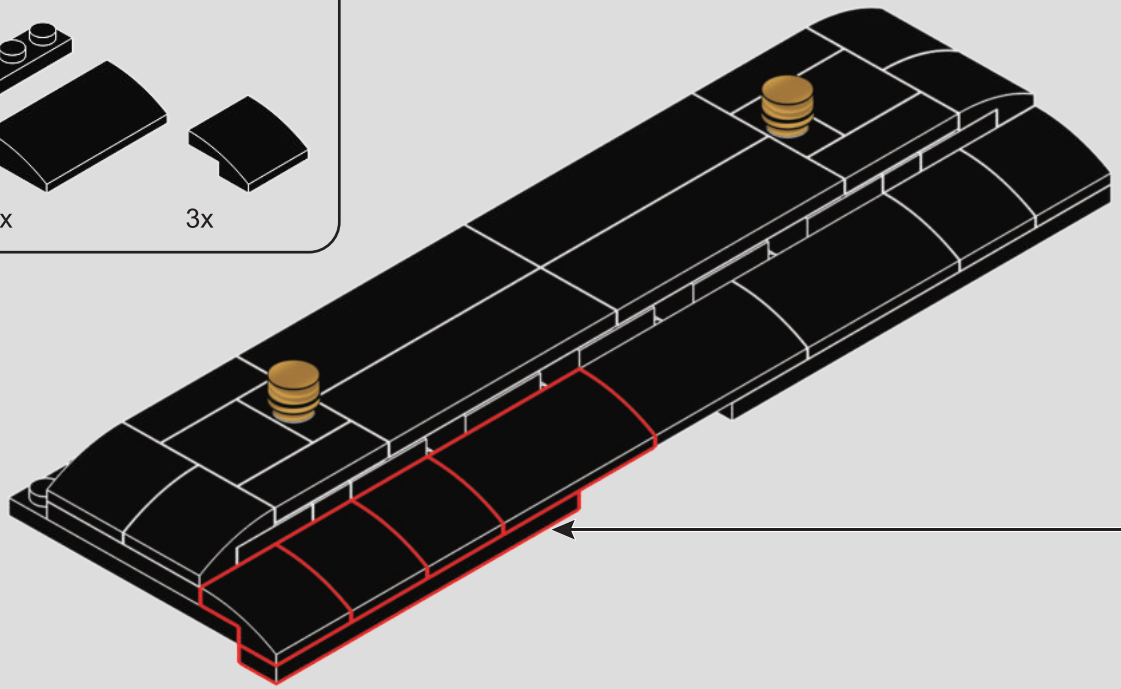

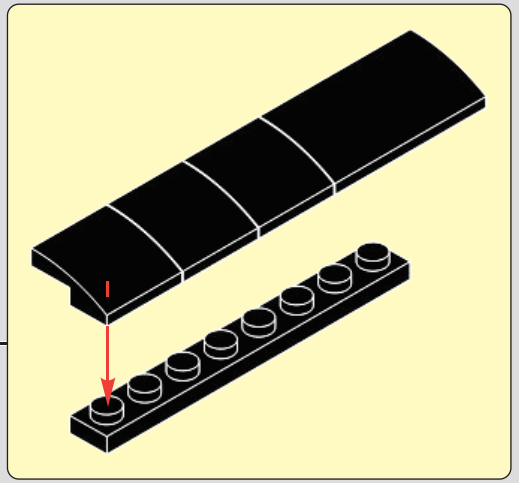

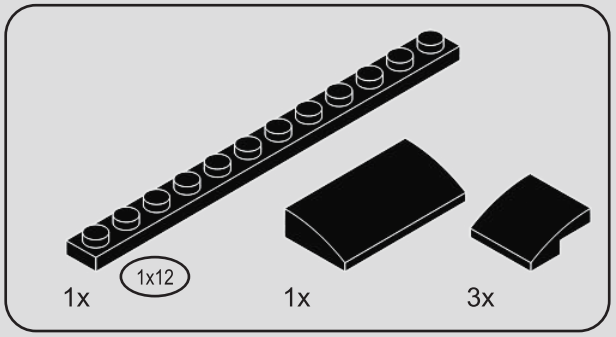

288

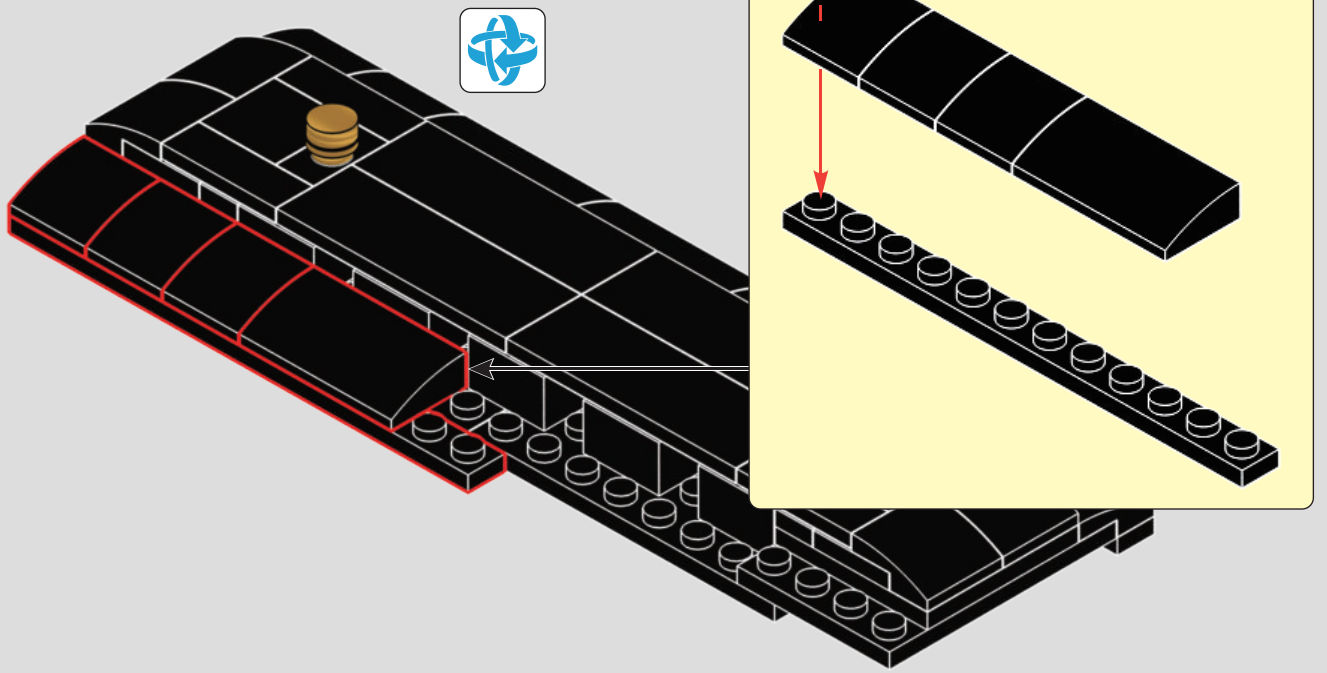

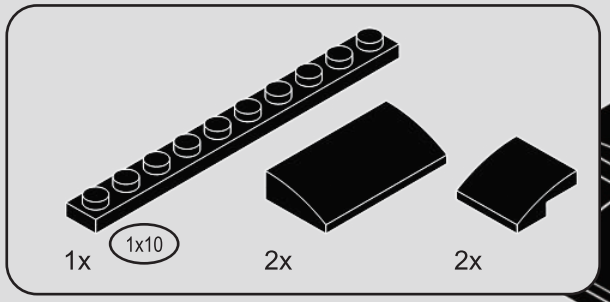

289

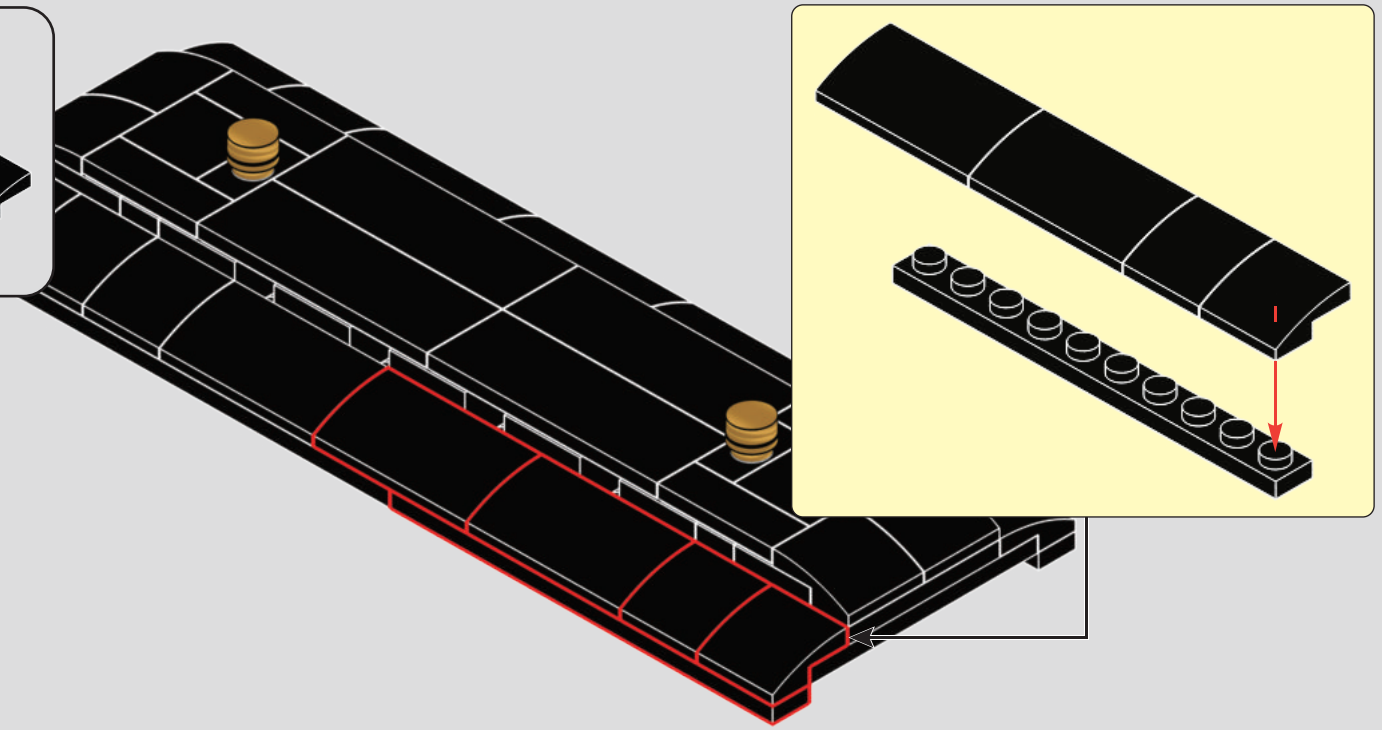

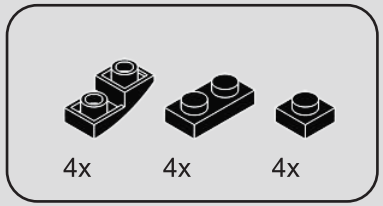

290

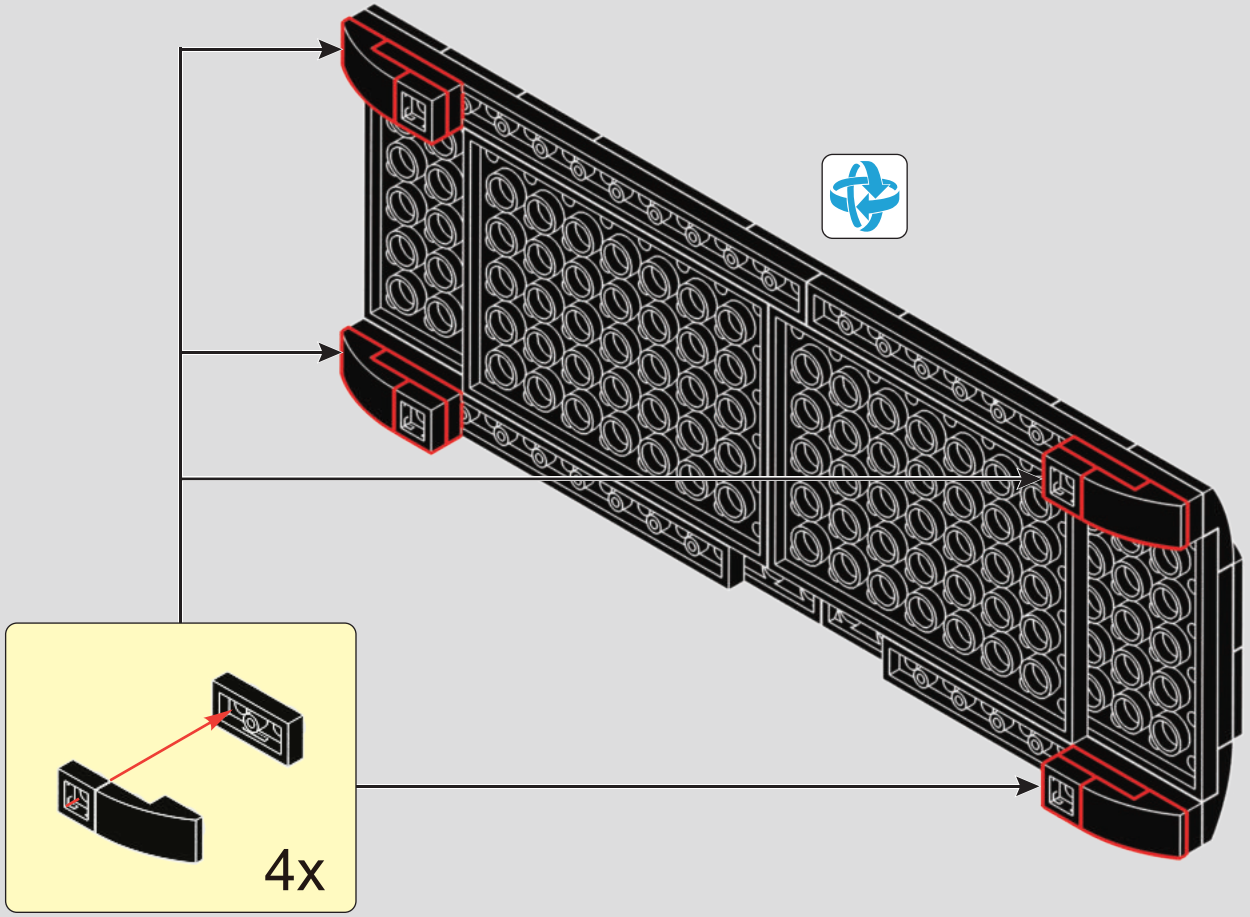

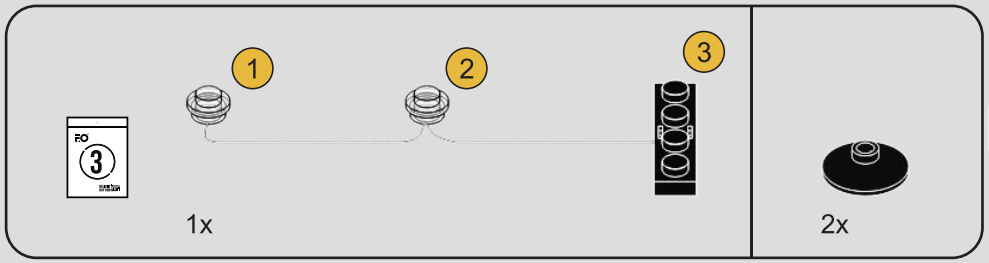

291

1

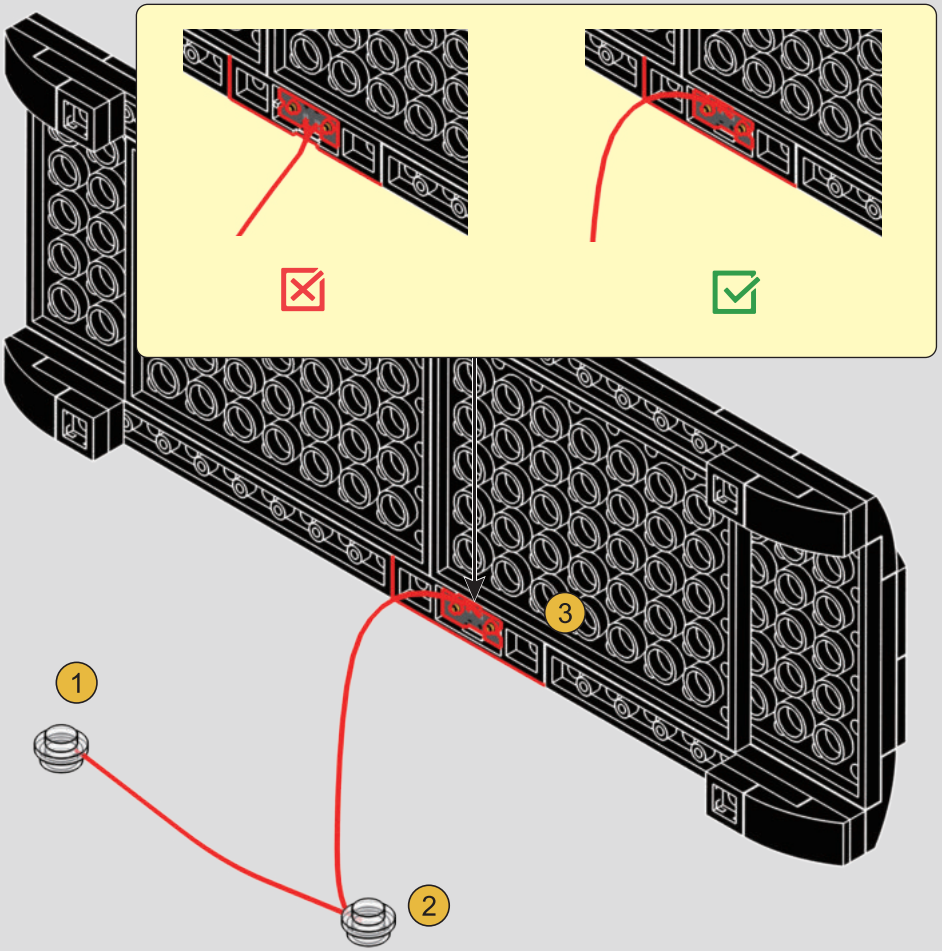

2

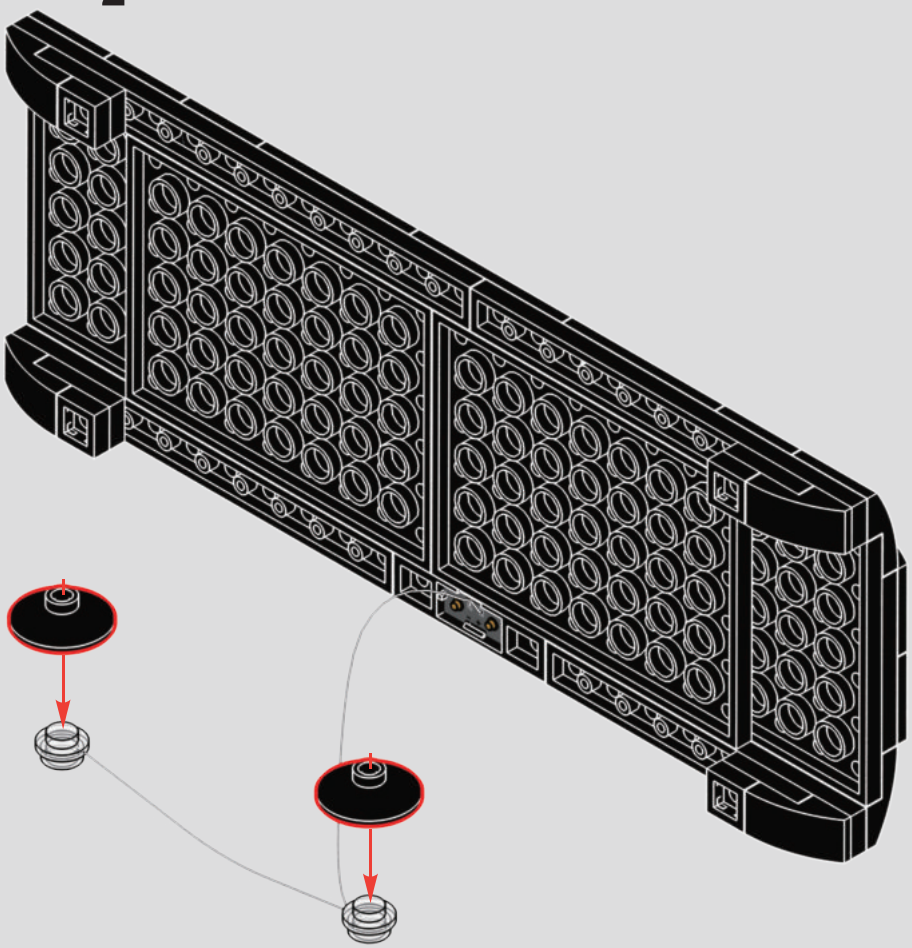

292

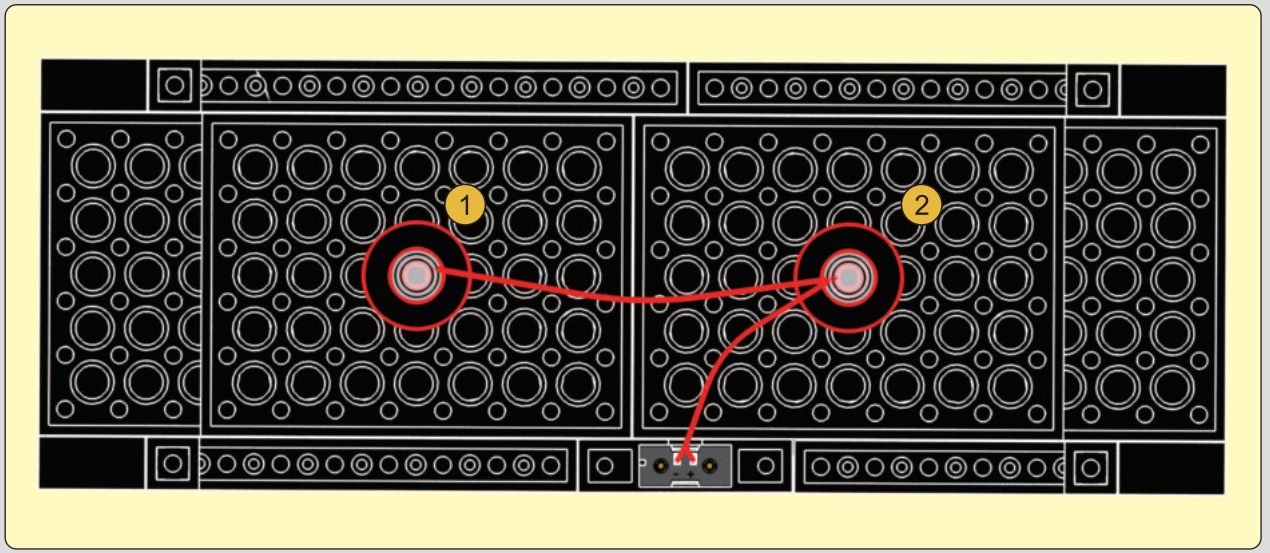

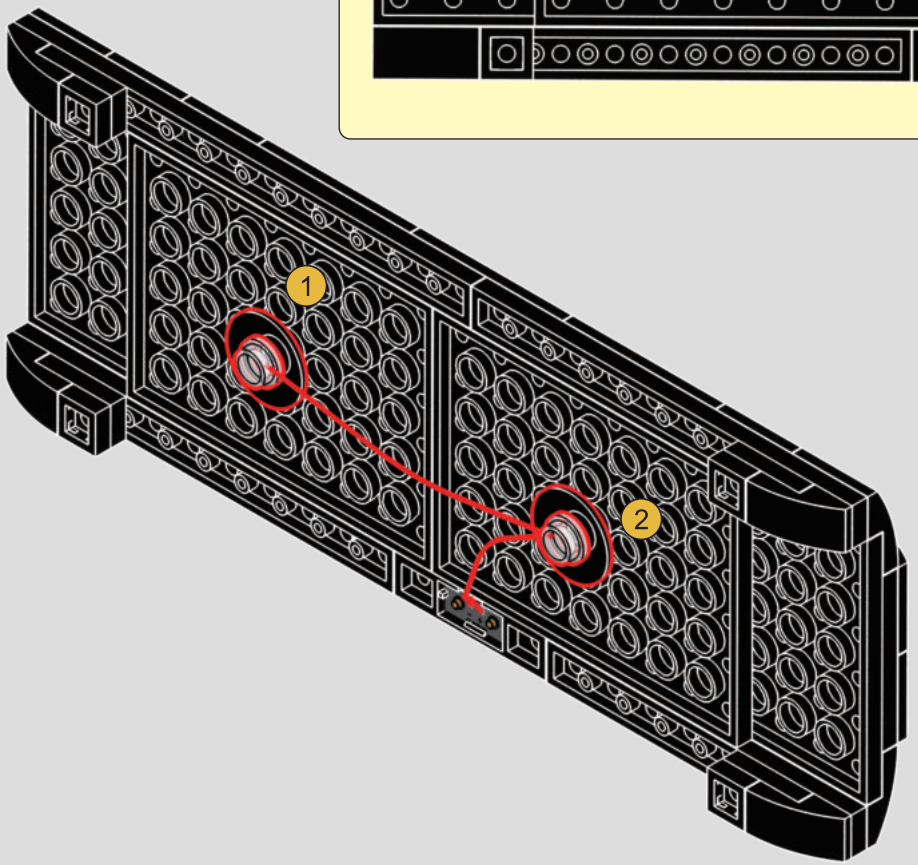

293

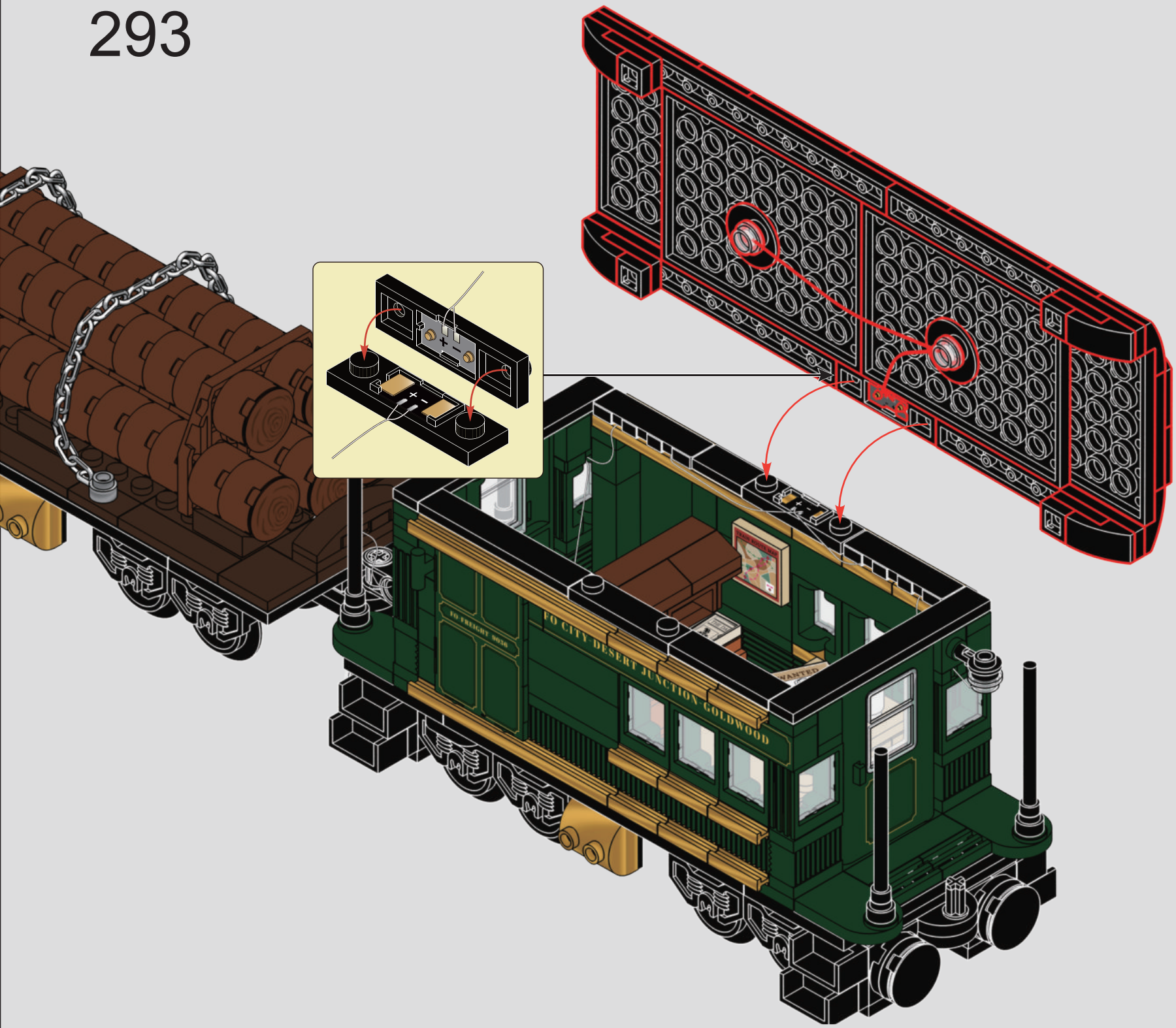

7

WANTED

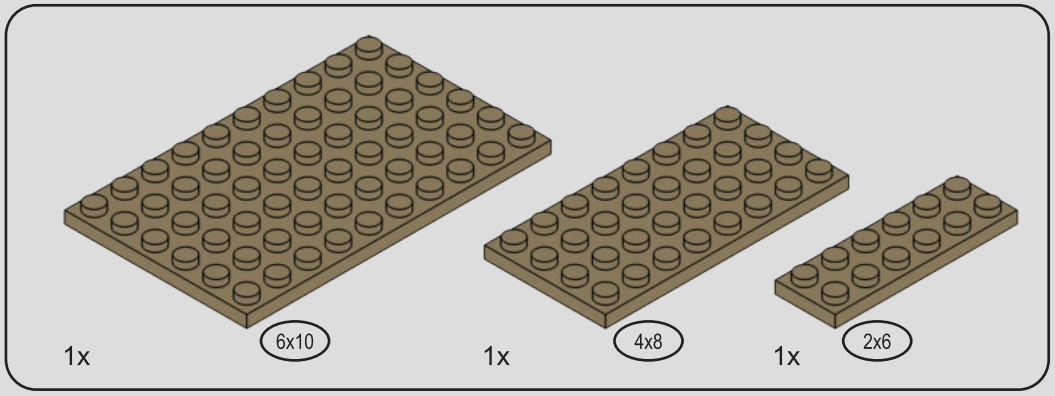

294

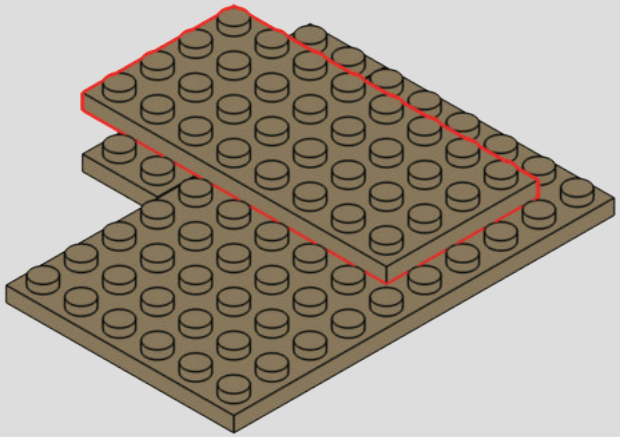

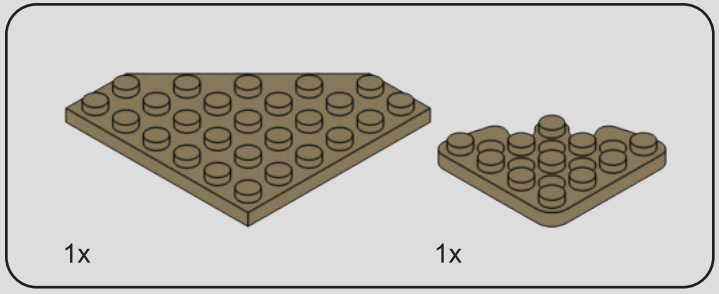

295

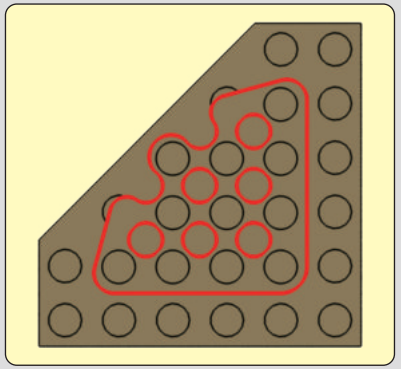

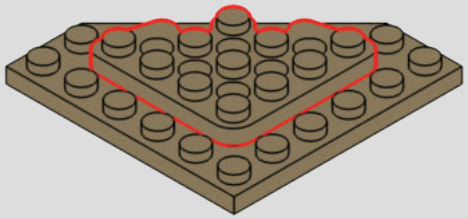

296

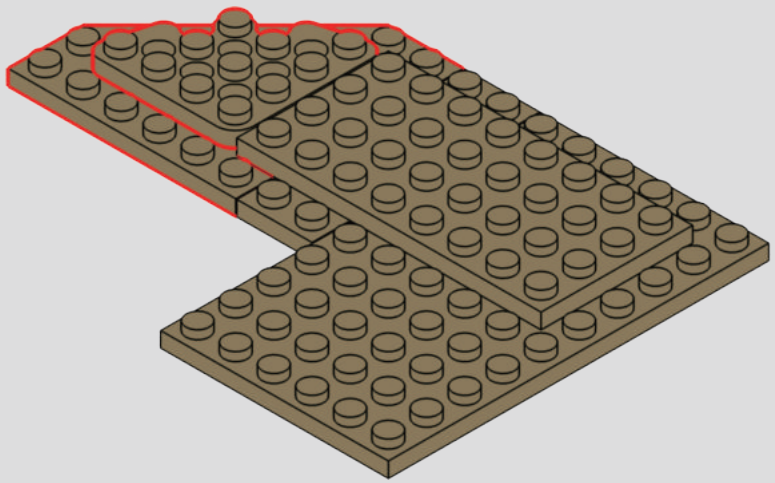

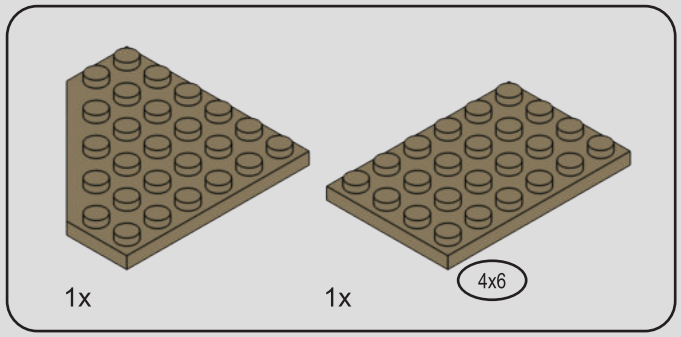

297

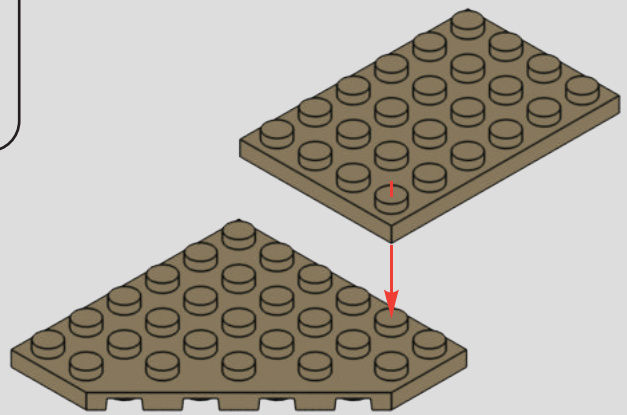

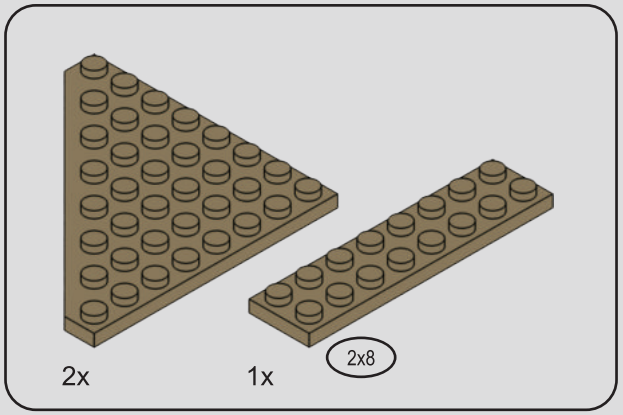

298

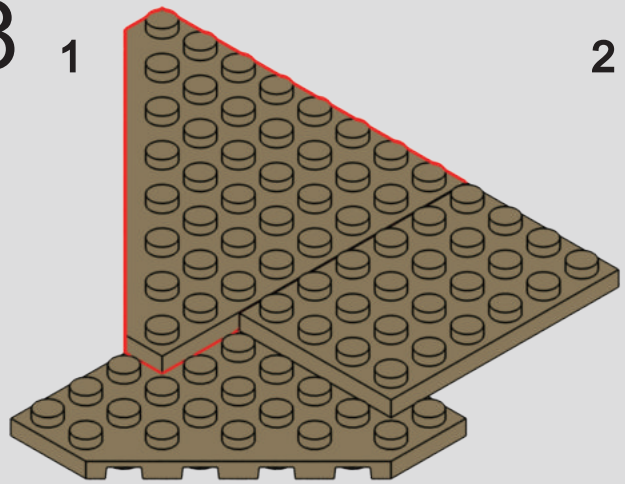

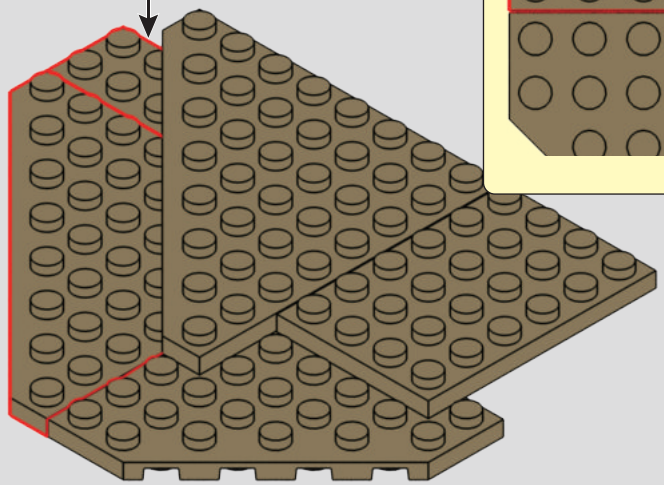

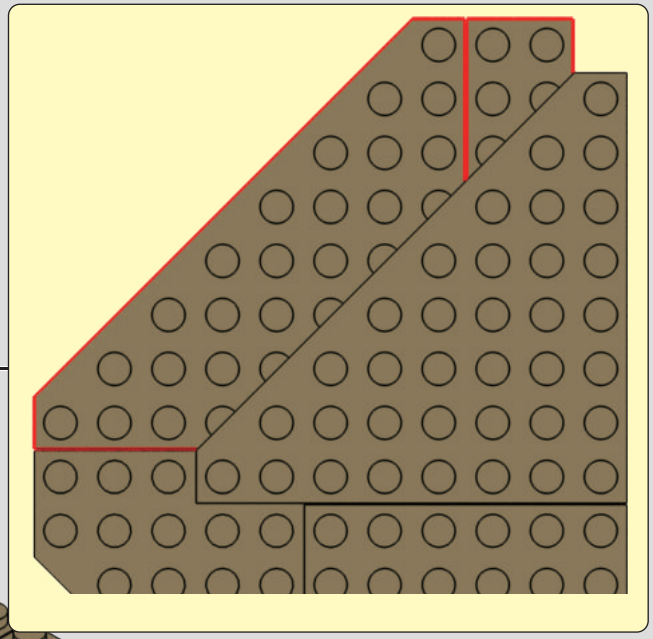

299

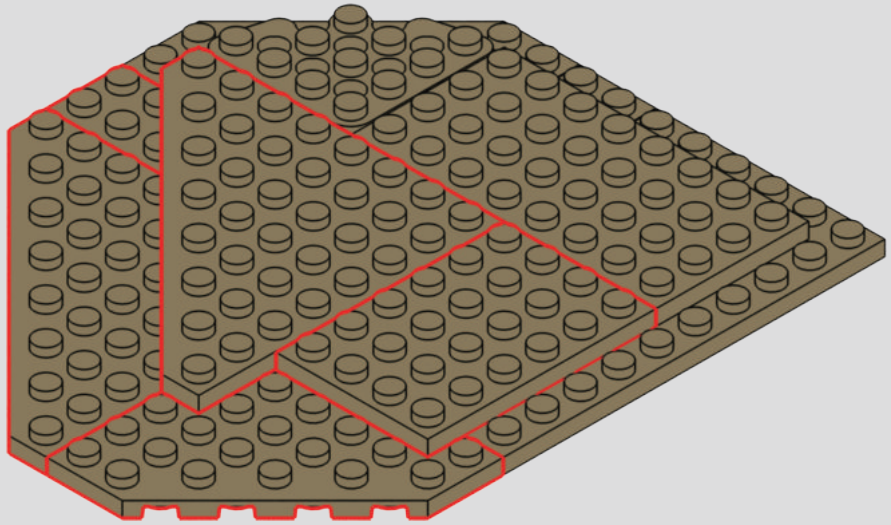

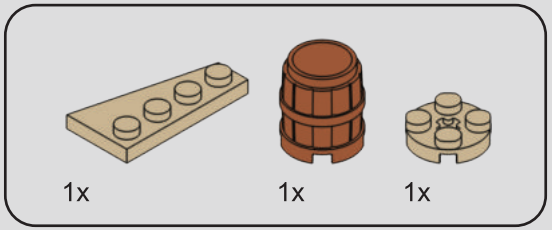

300

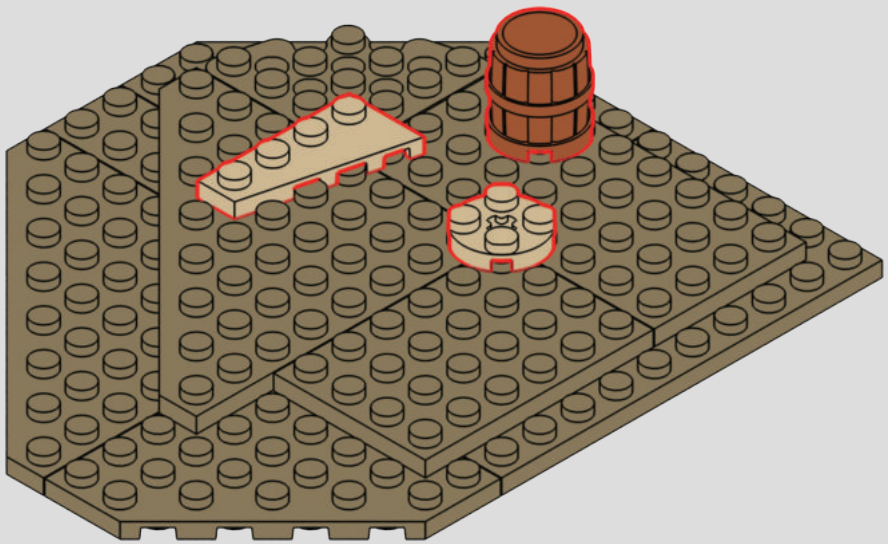

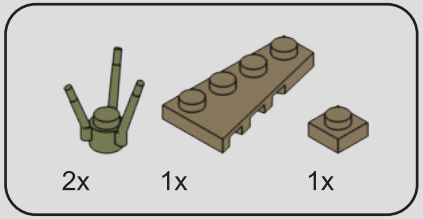

301

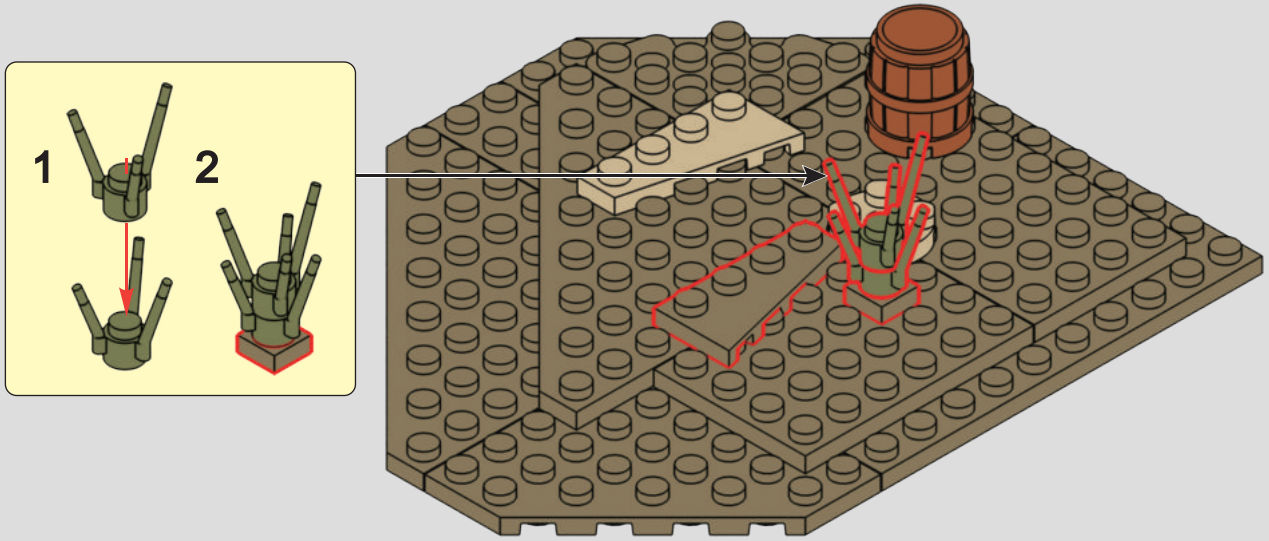

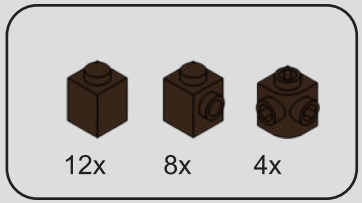

302

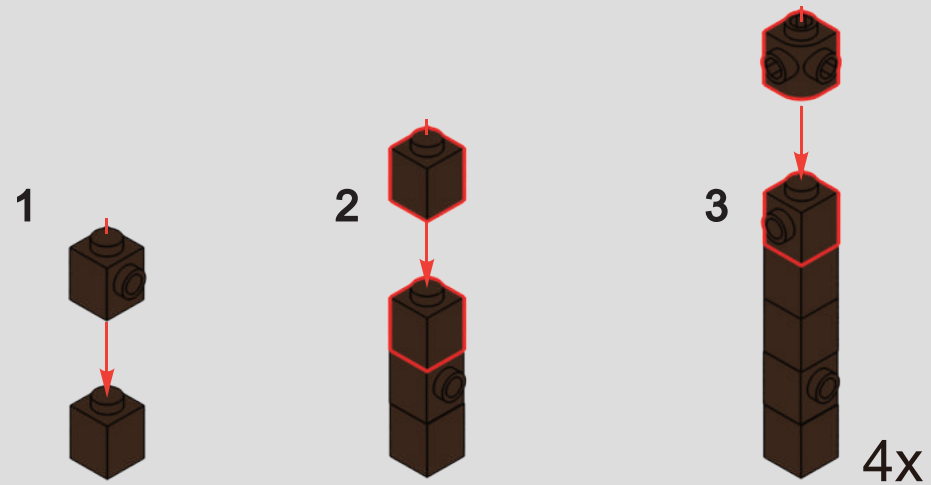

303

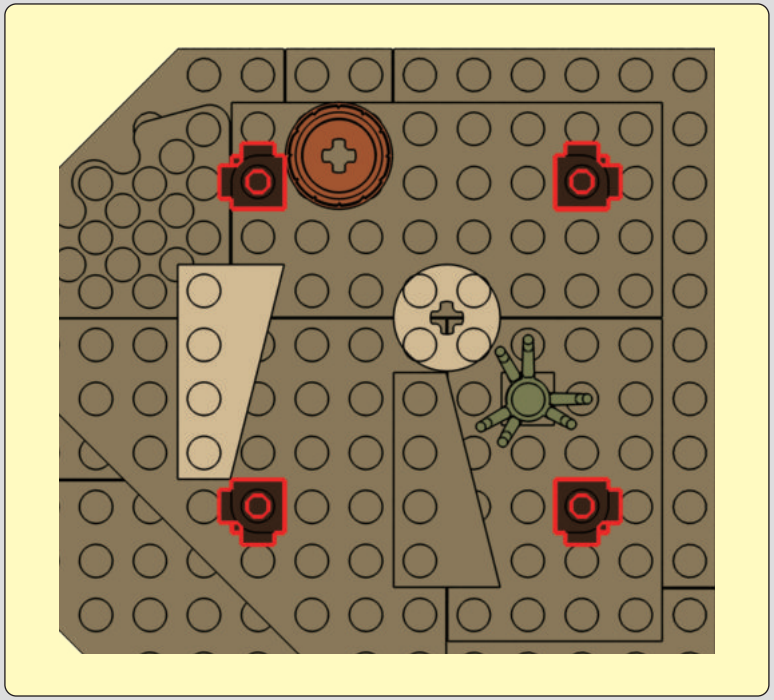

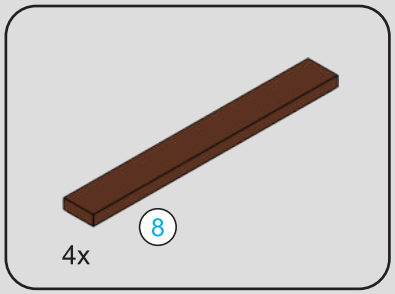

304

1

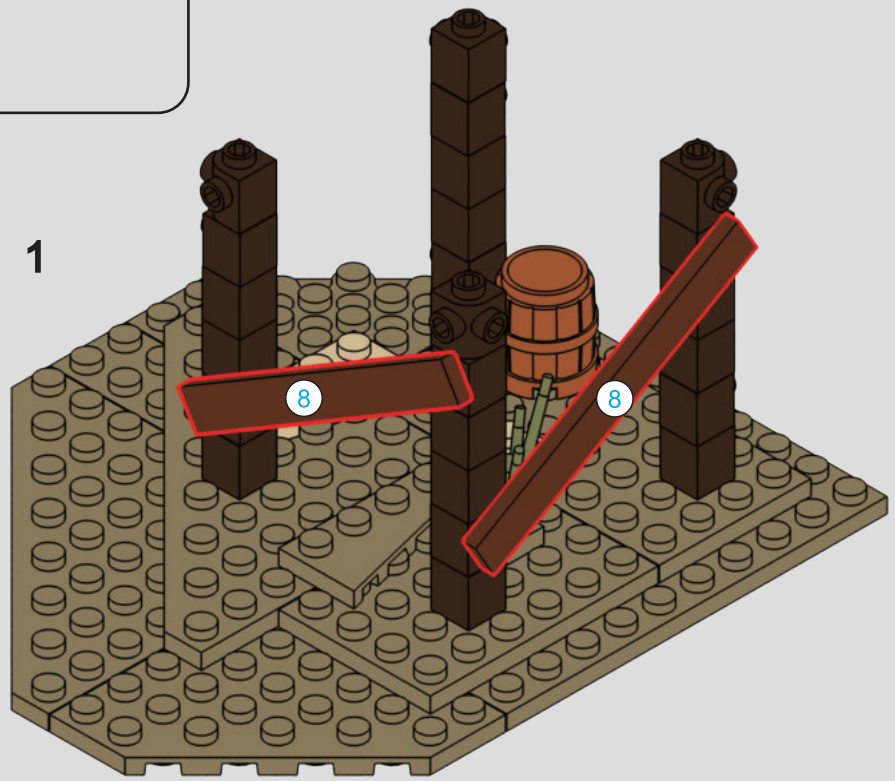

2

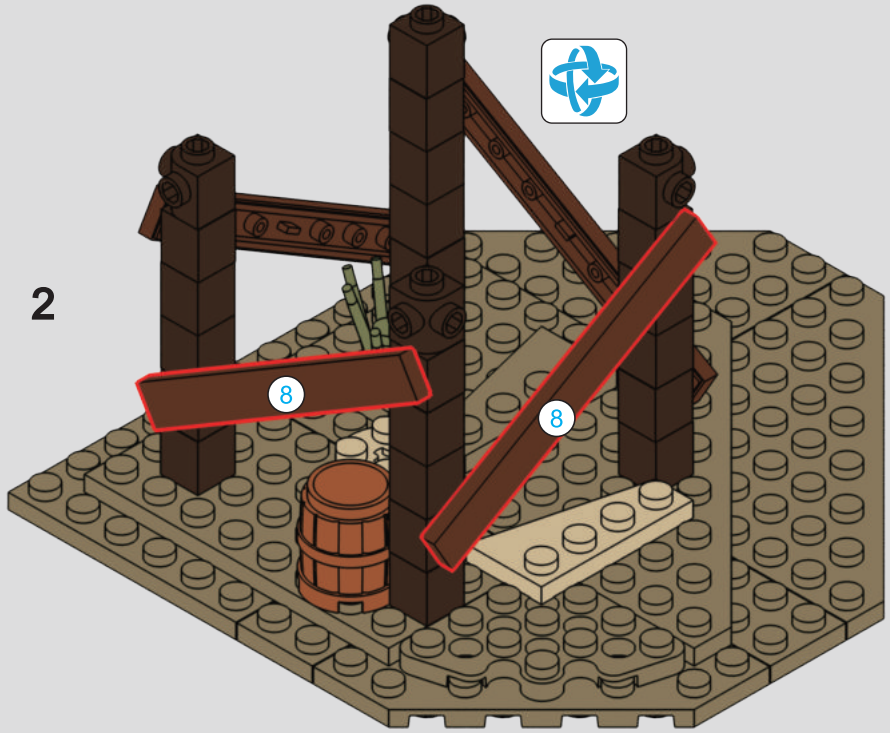

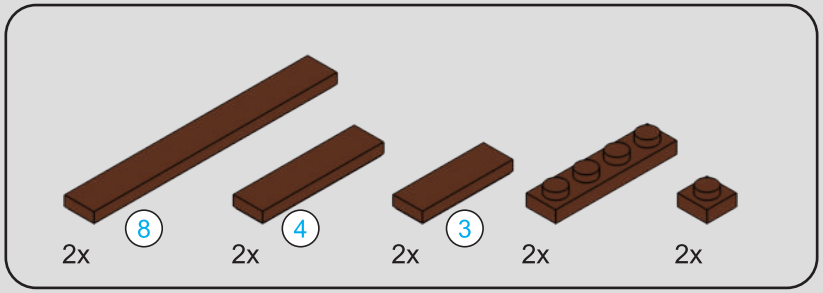

305

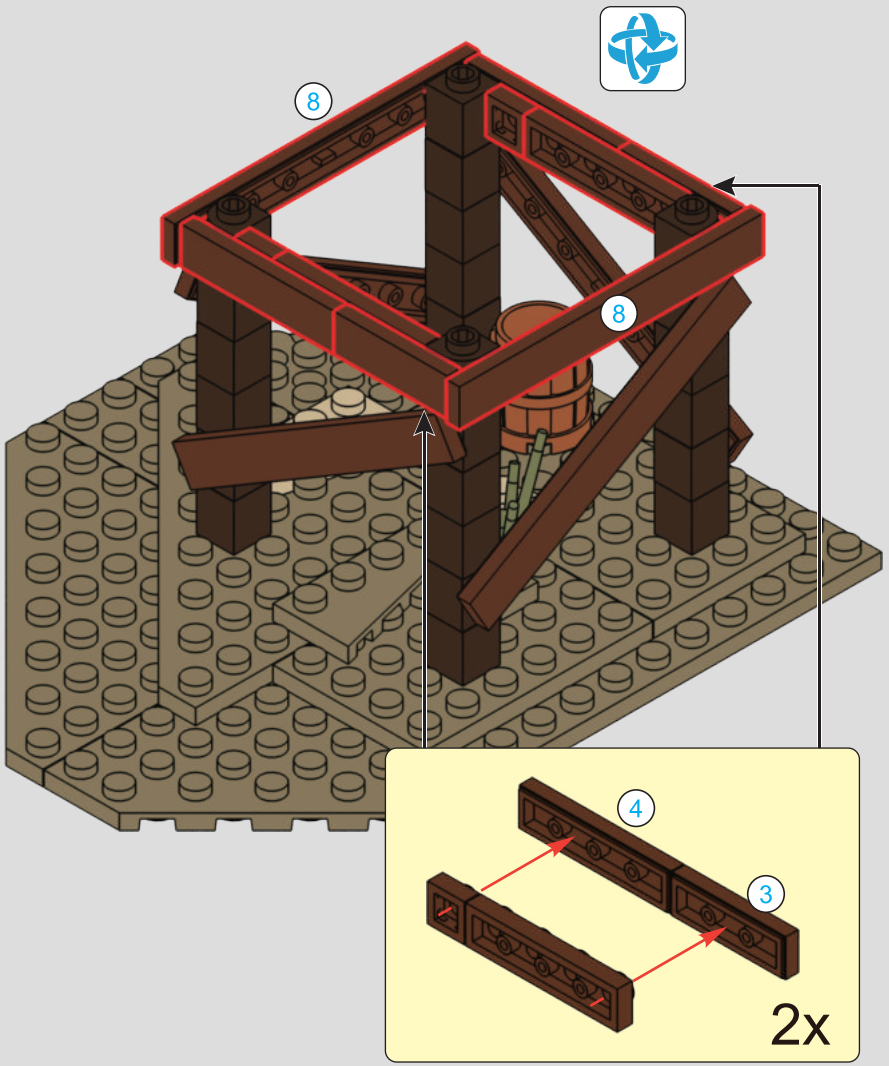

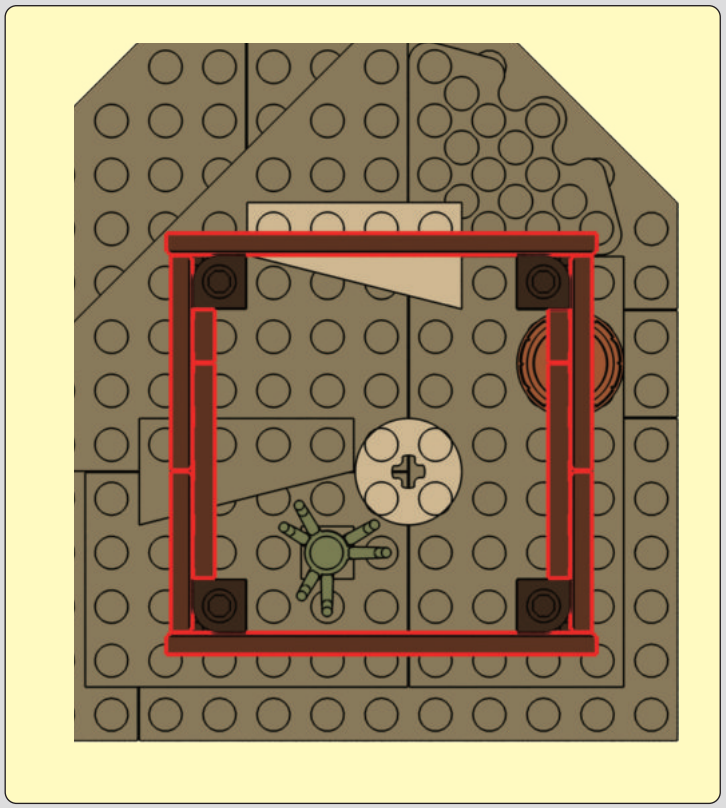

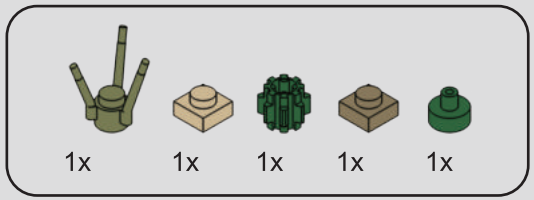

306

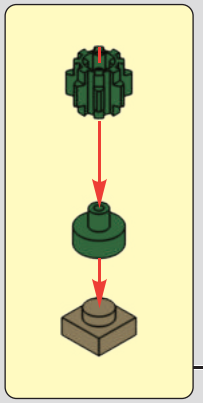

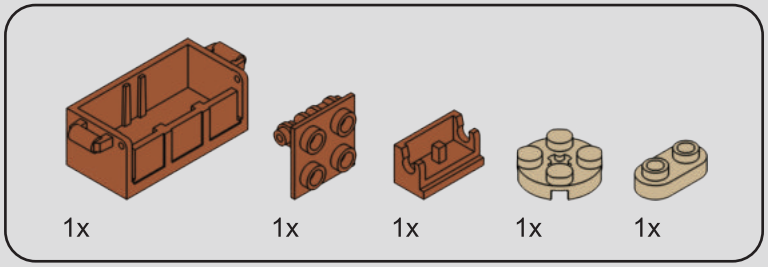

307

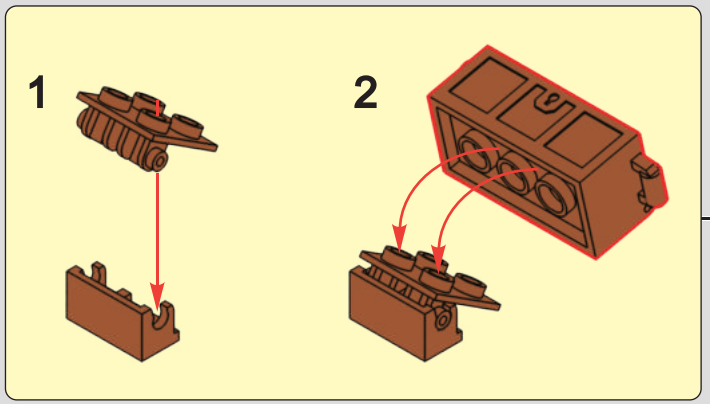

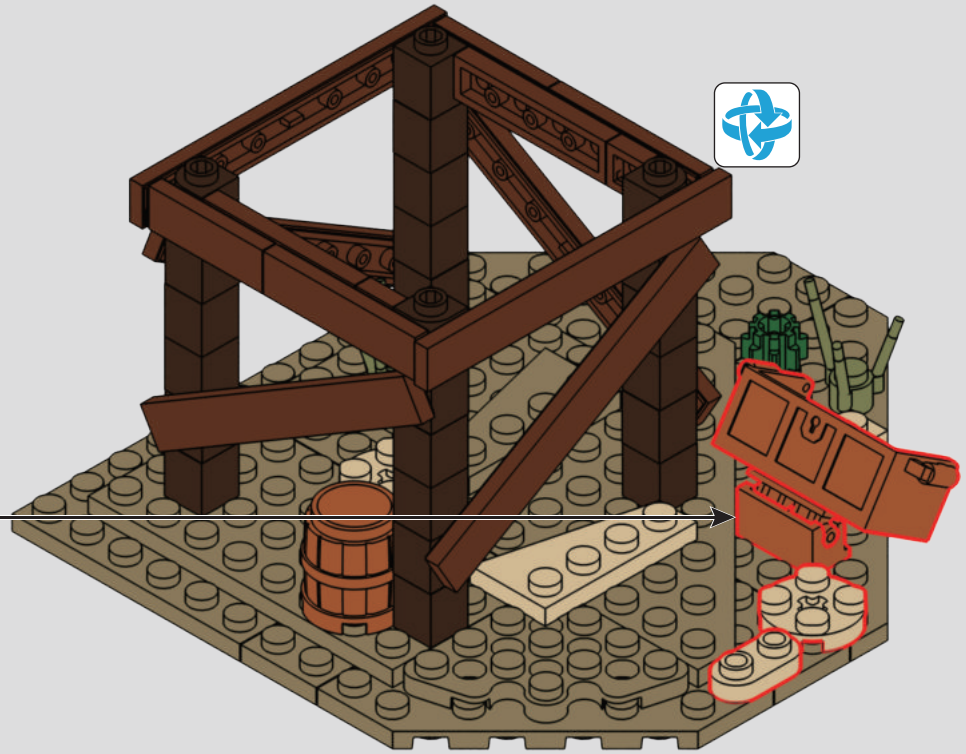

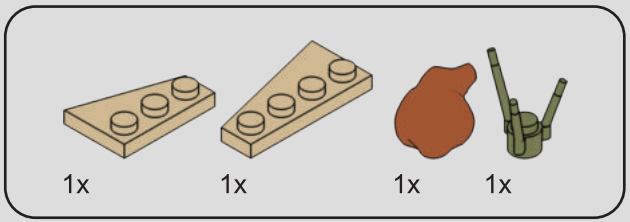

308

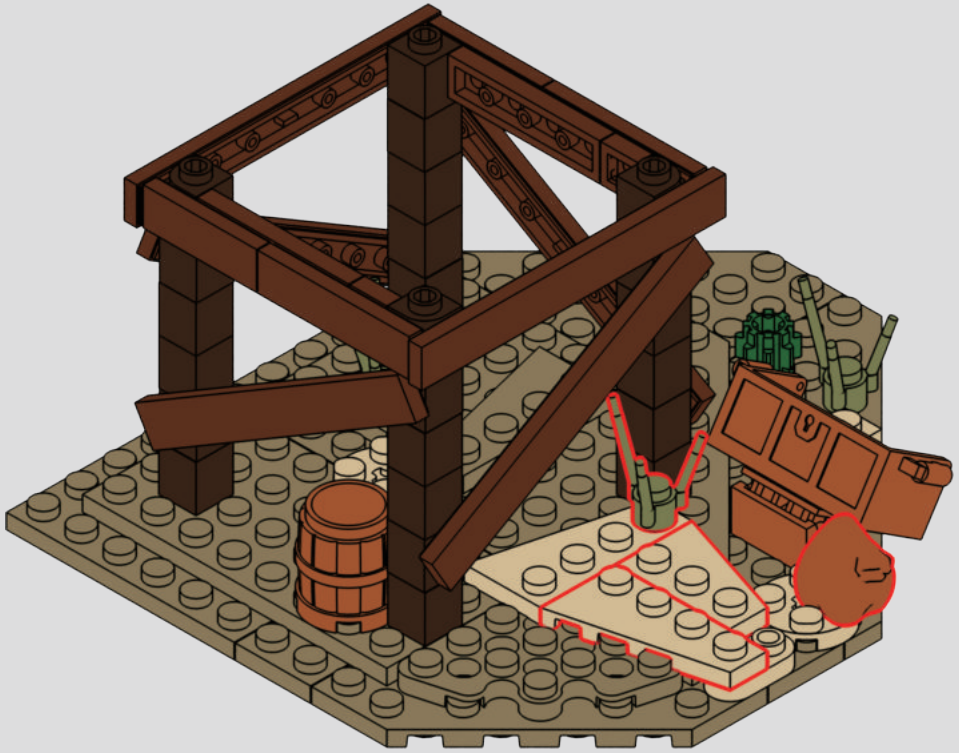

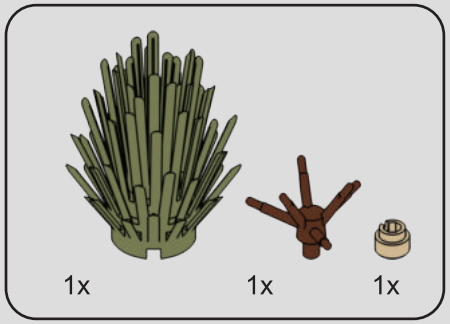

309

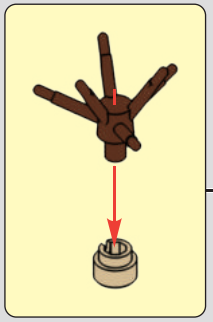

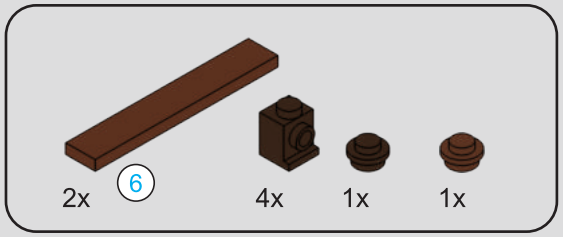

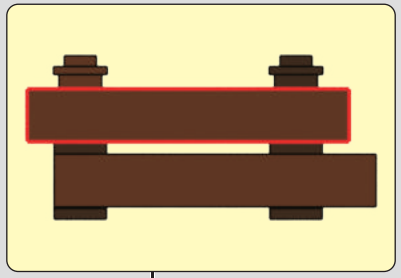

310

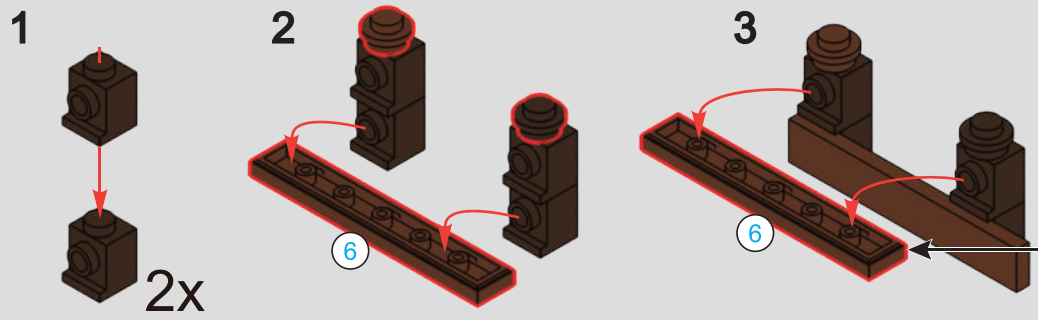

311

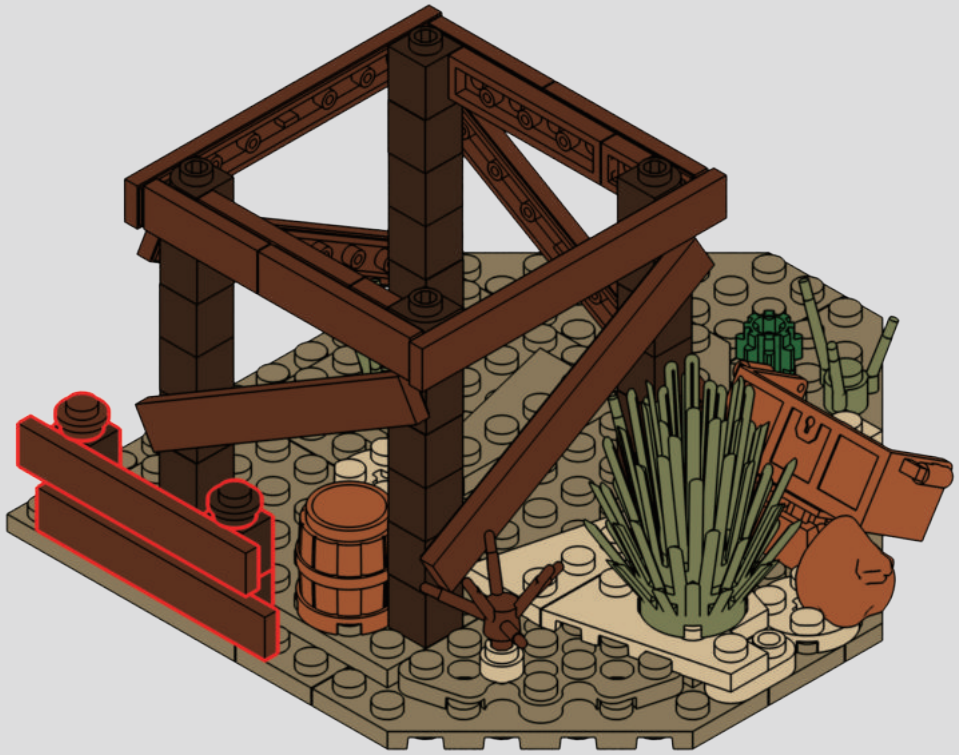

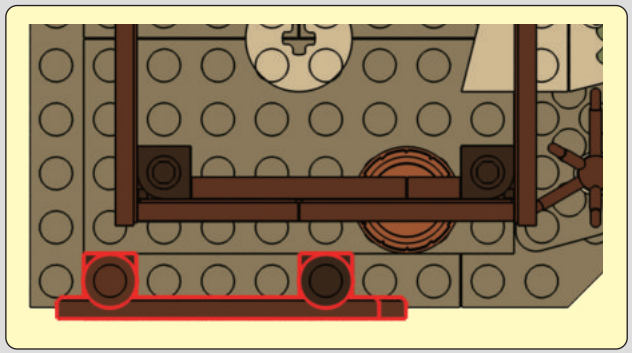

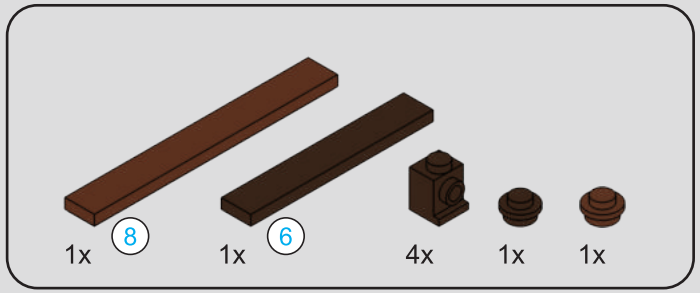

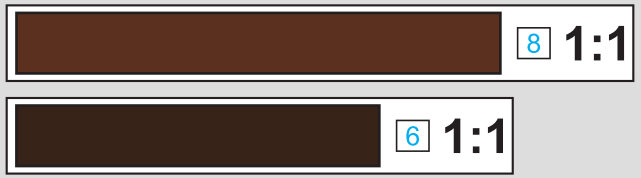

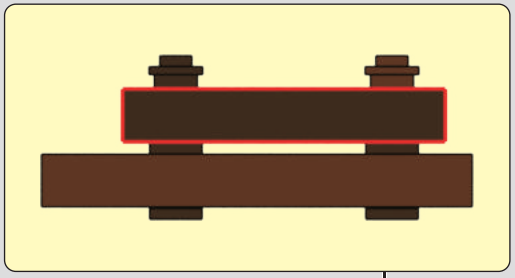

312

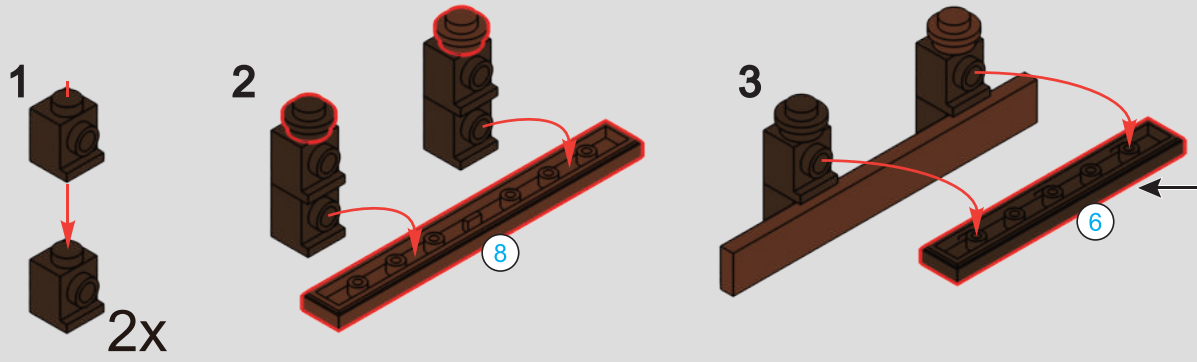

313

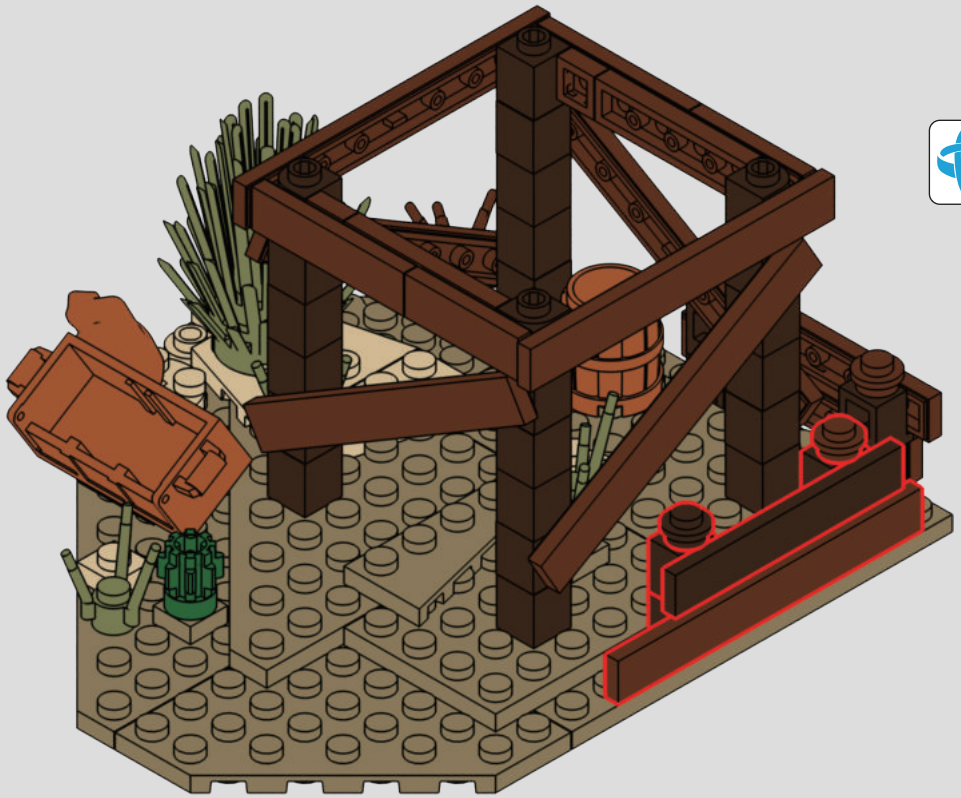

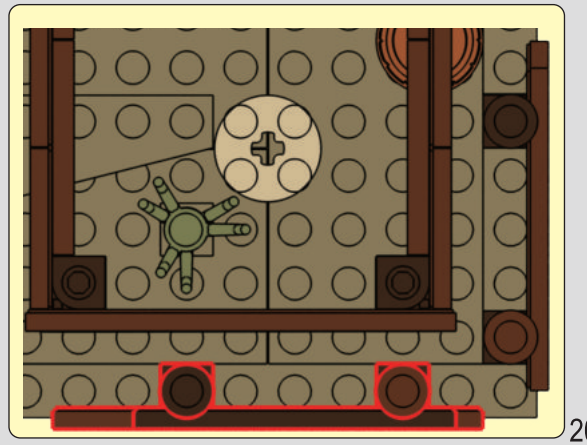

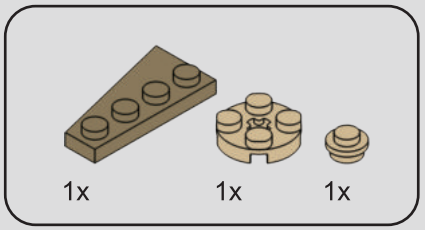

314

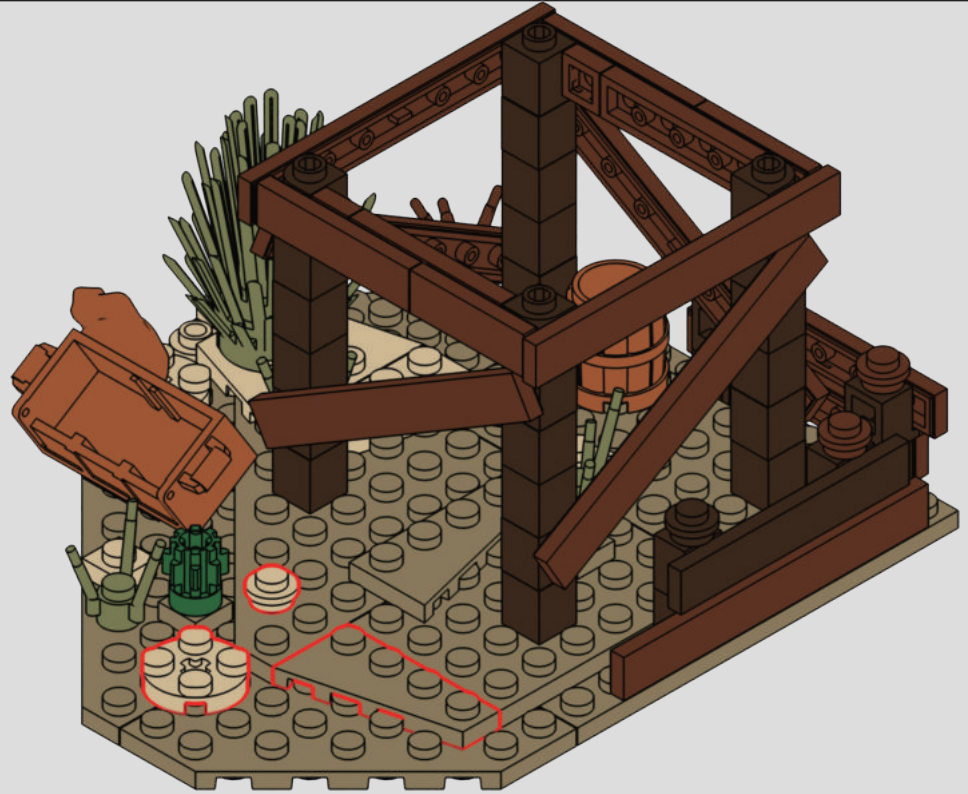

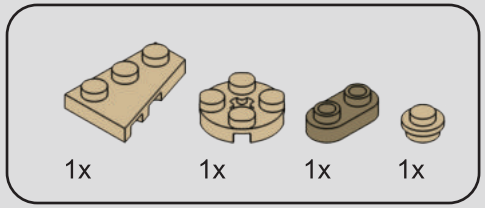

315

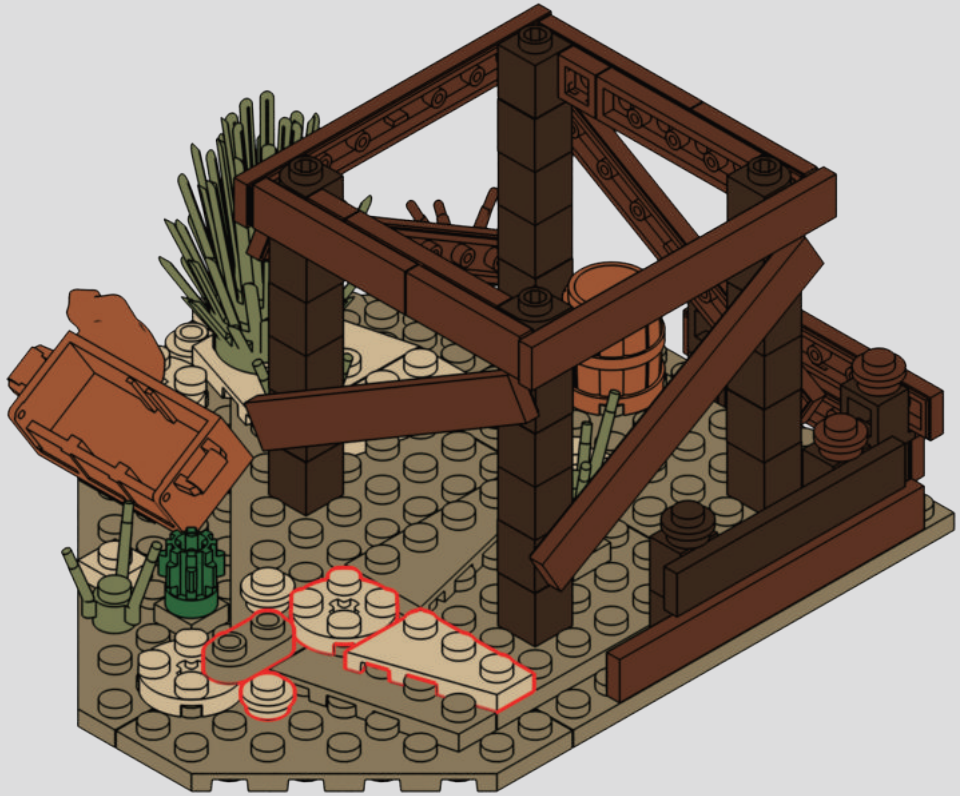

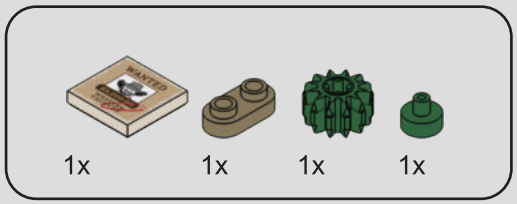

316

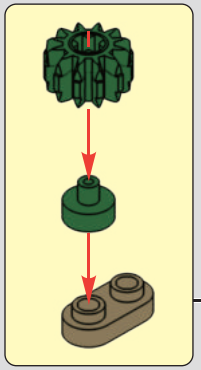

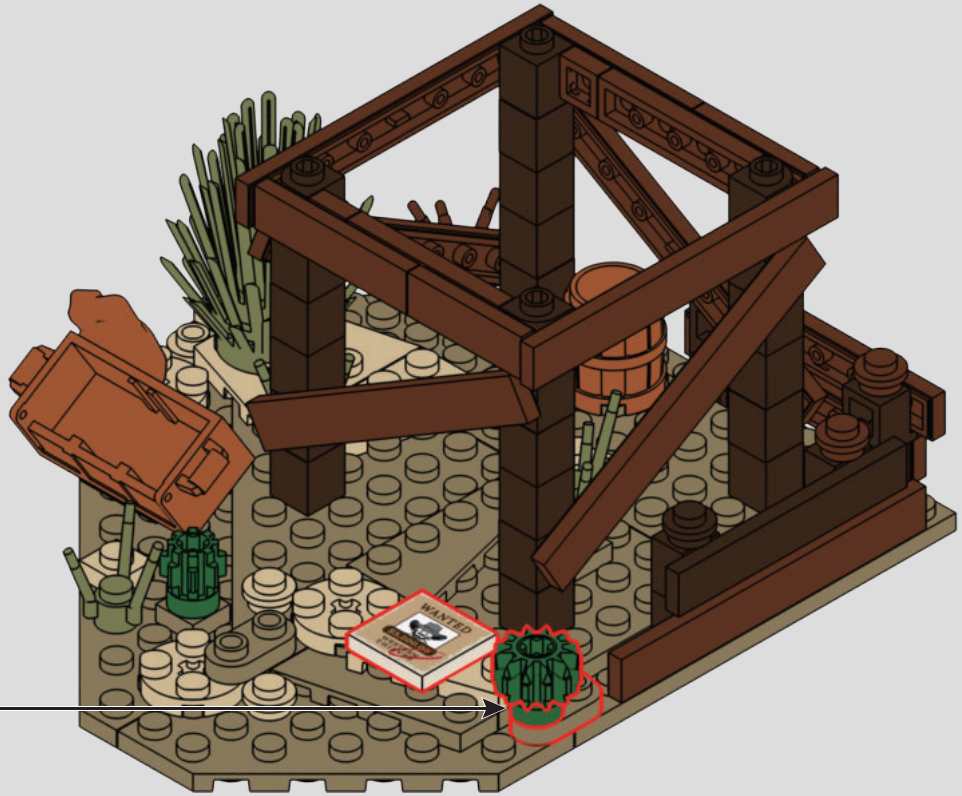

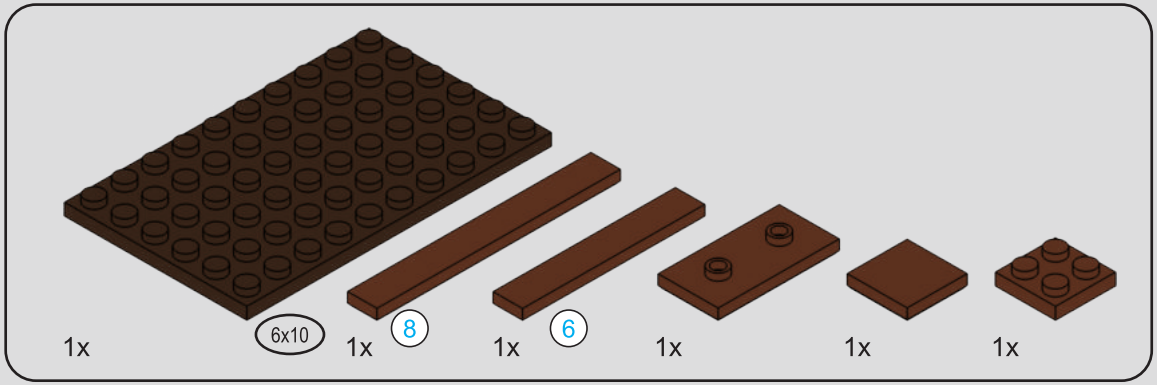

317

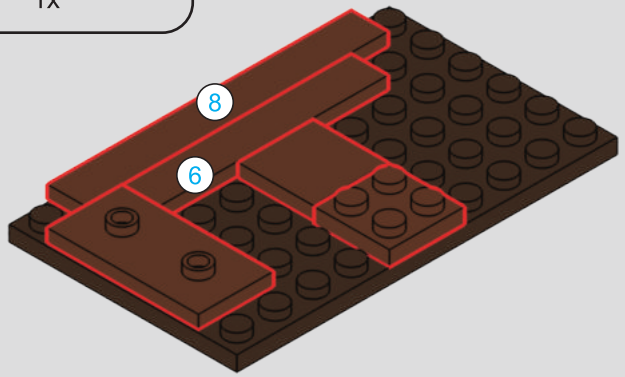

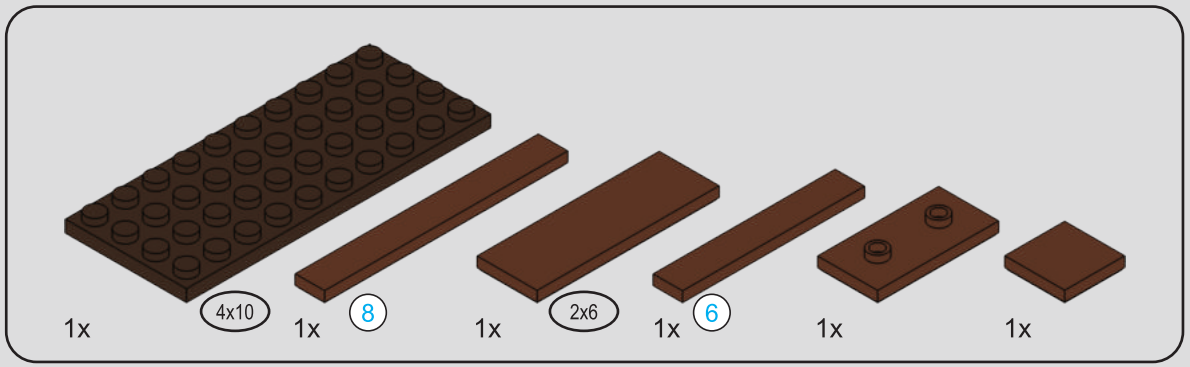

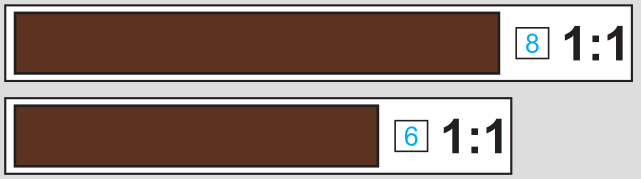

318

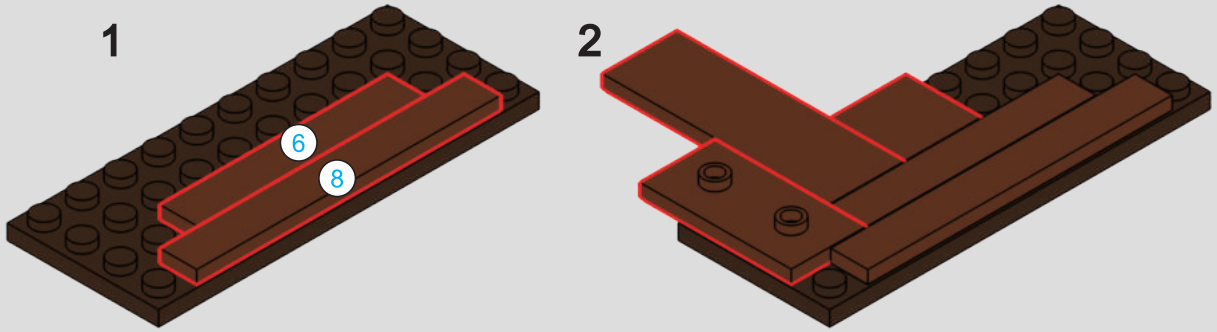

319

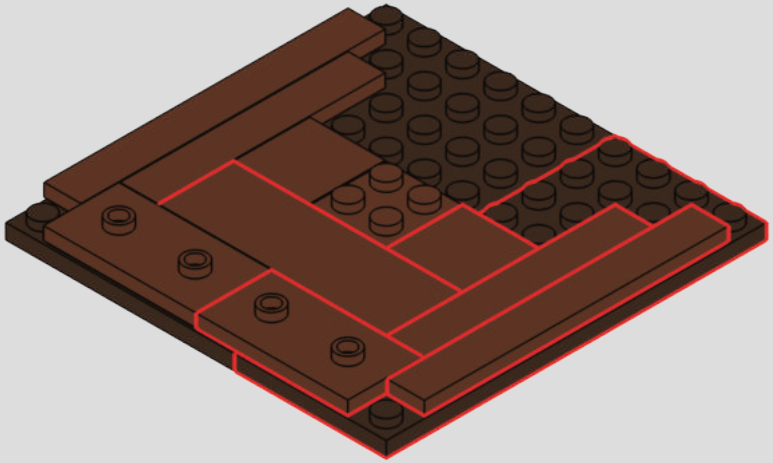

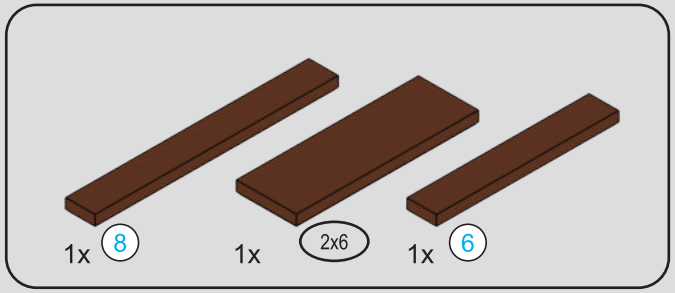

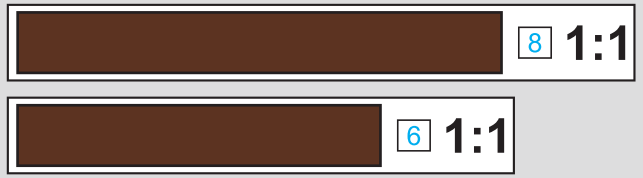

320

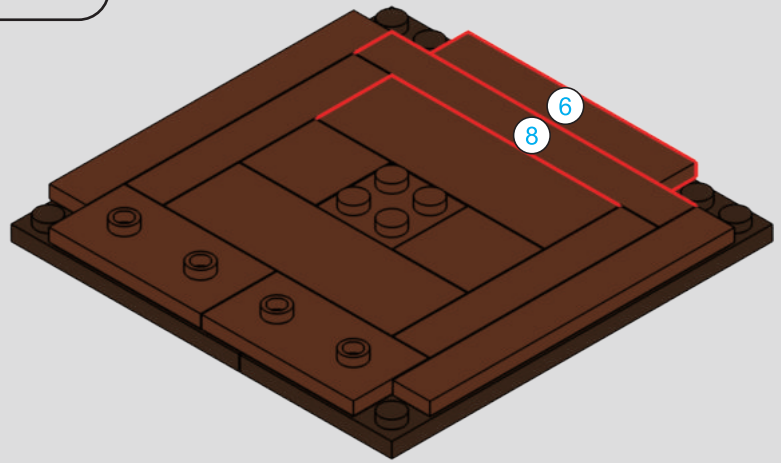

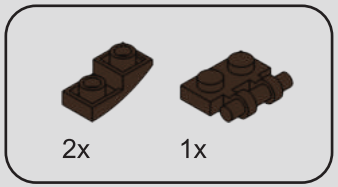

321

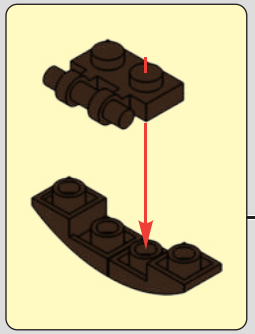

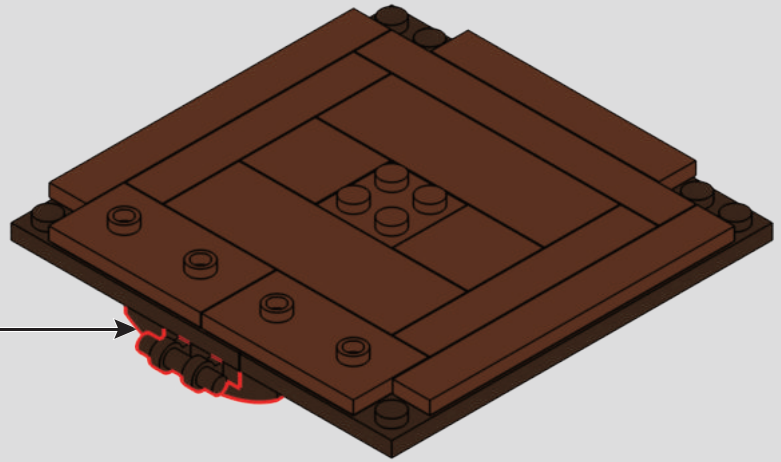

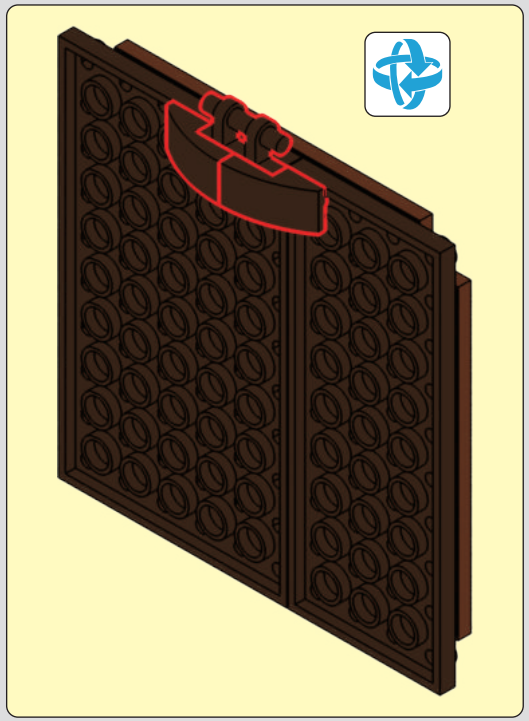

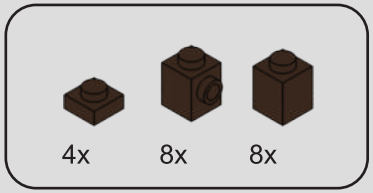

322

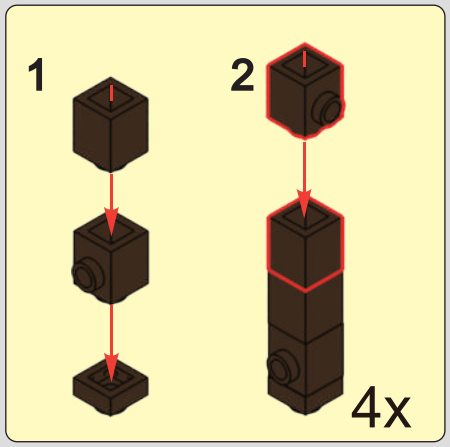

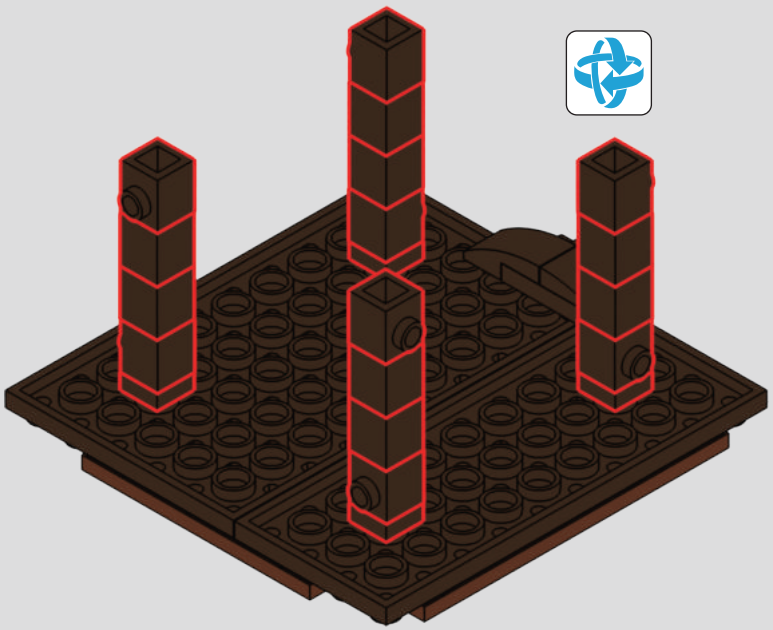

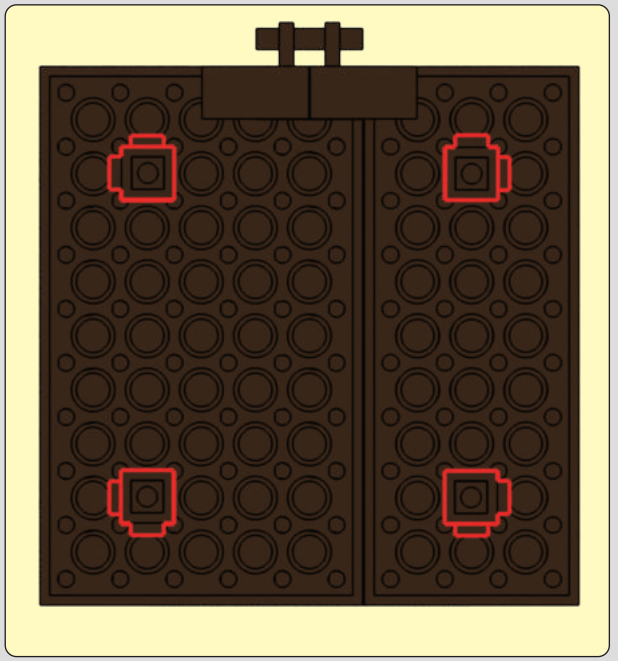

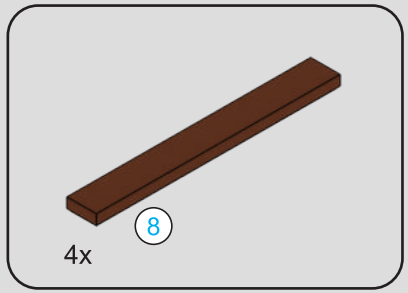

323

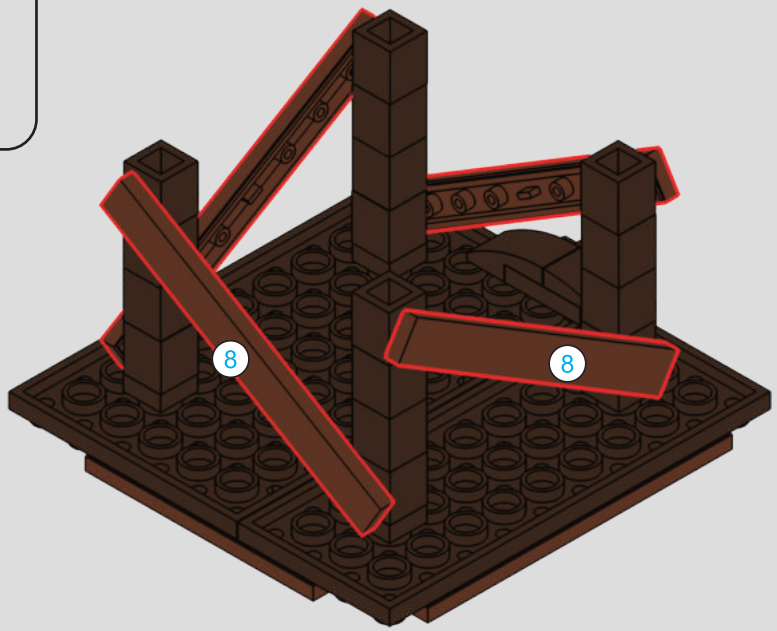

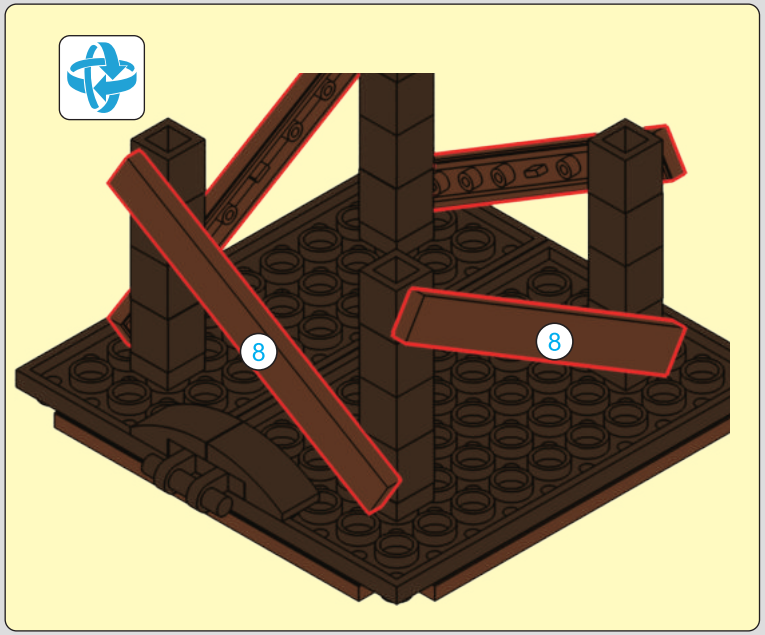

324

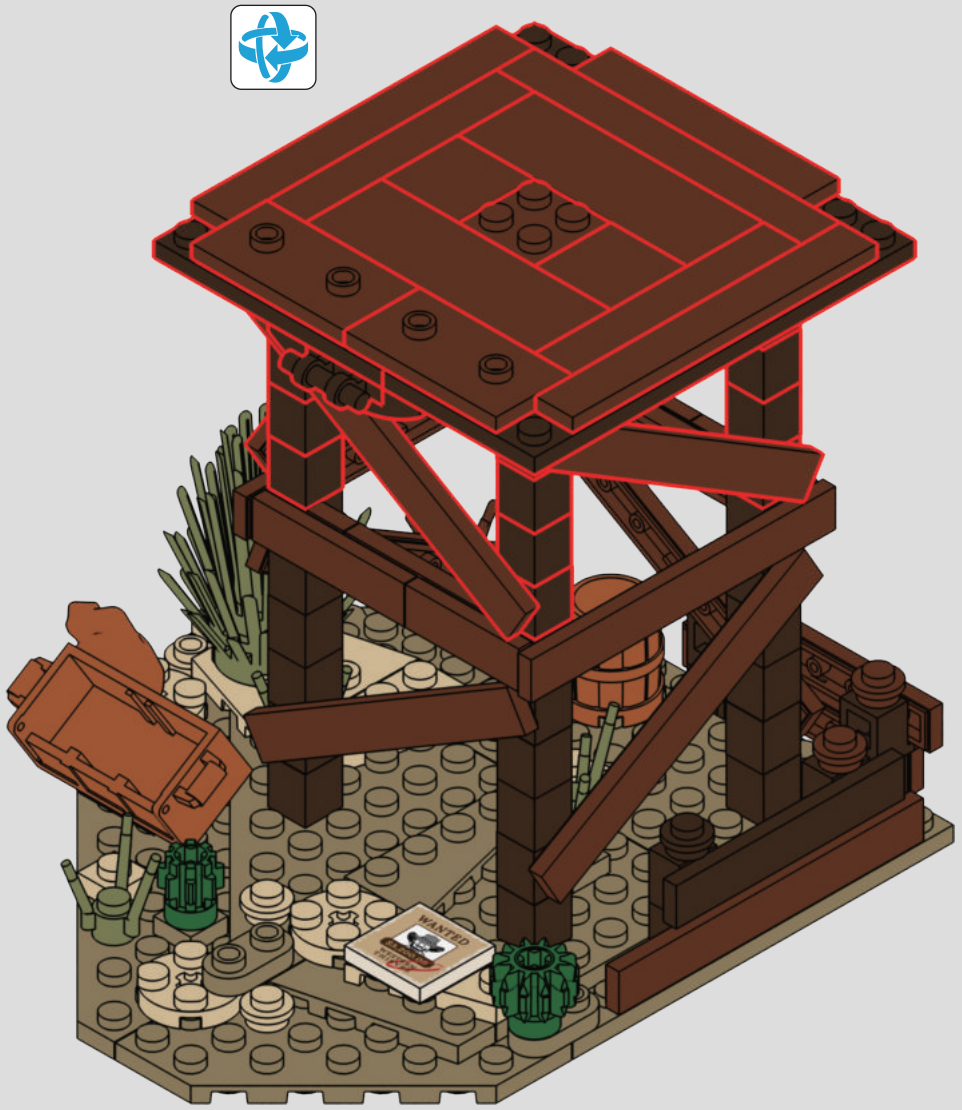

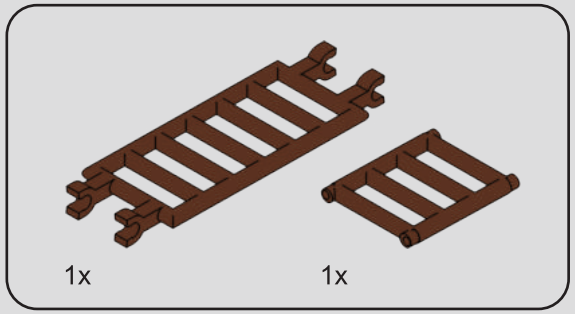

325

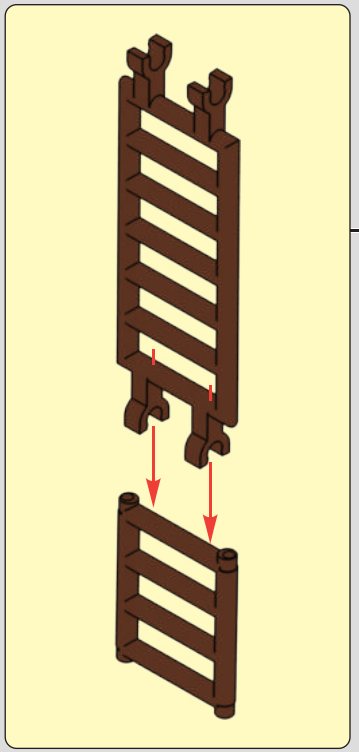

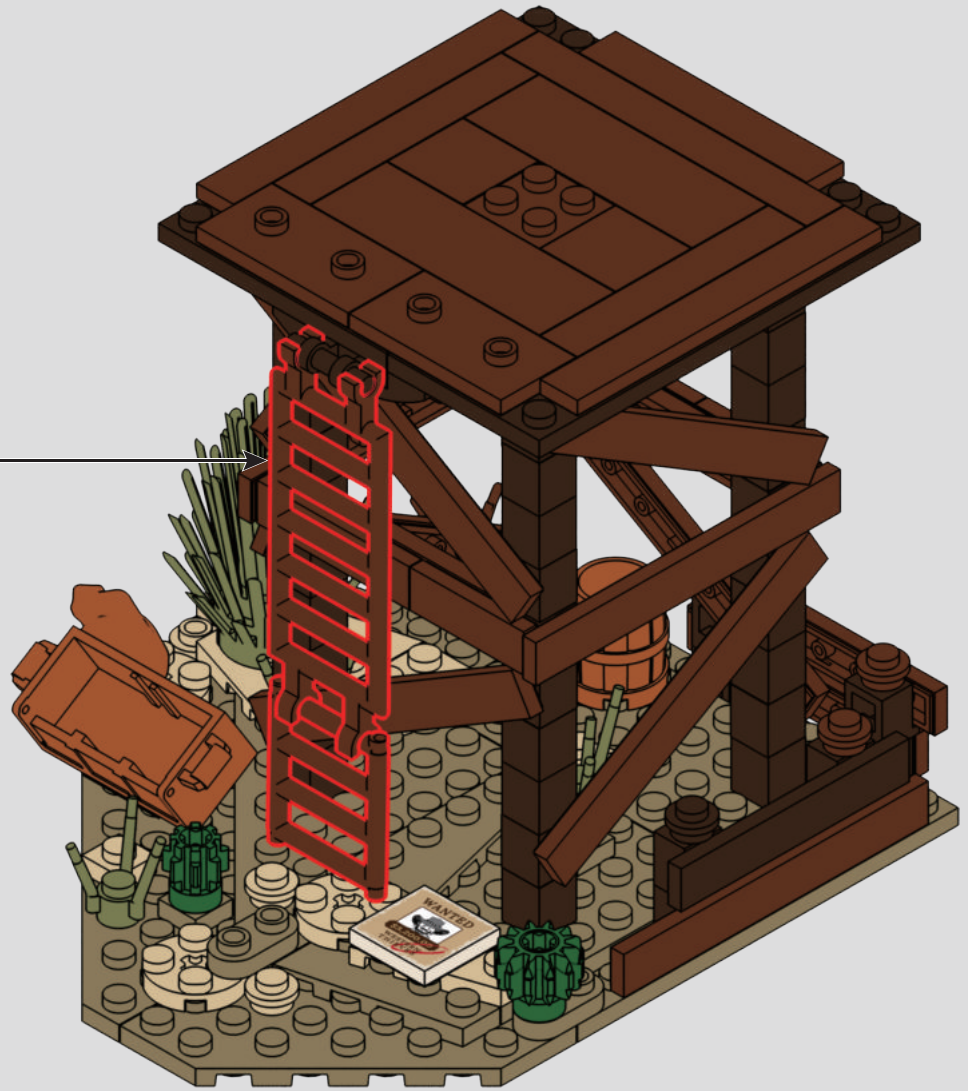

8
FREIGHT

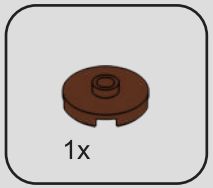

326

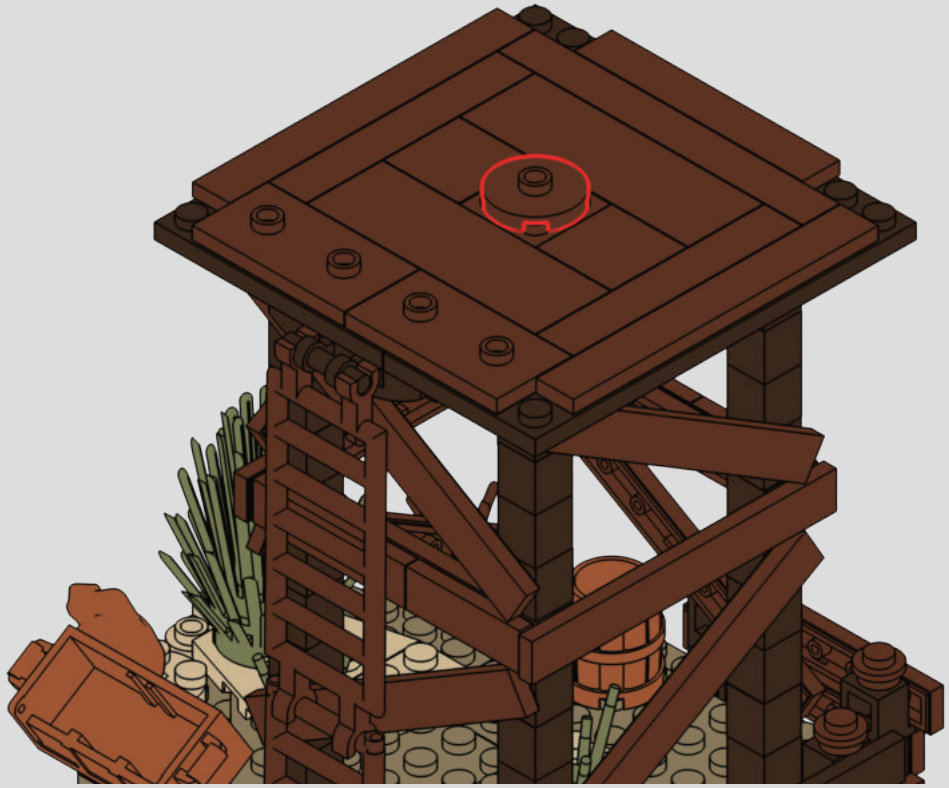

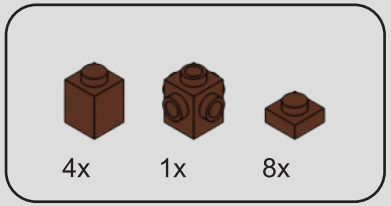

327

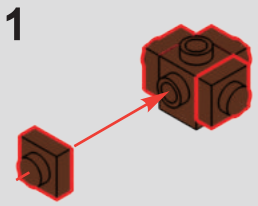

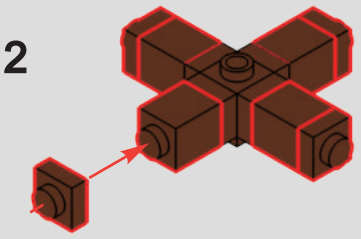

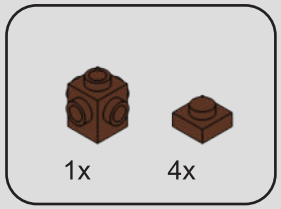

328

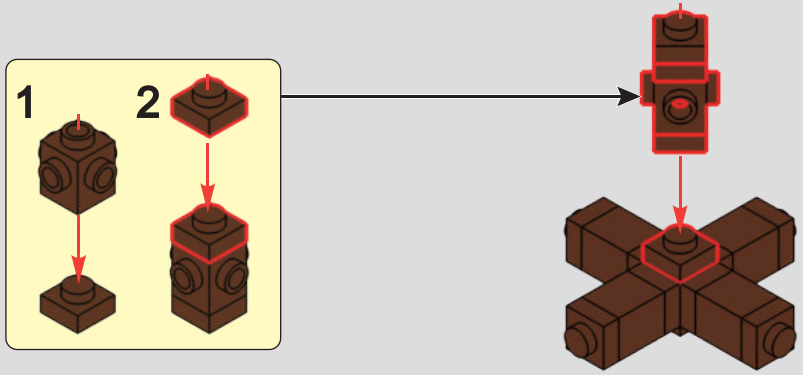

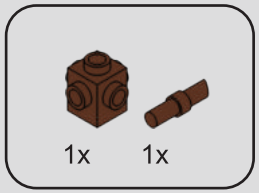

329

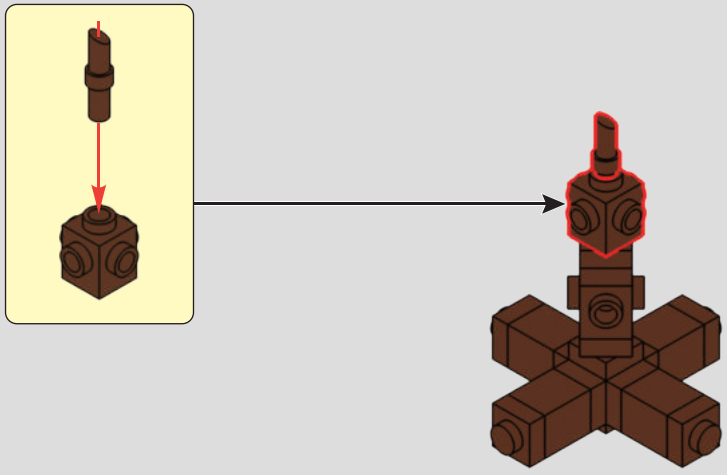

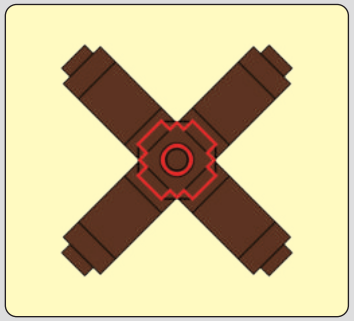

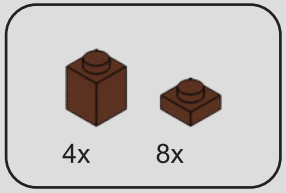

330

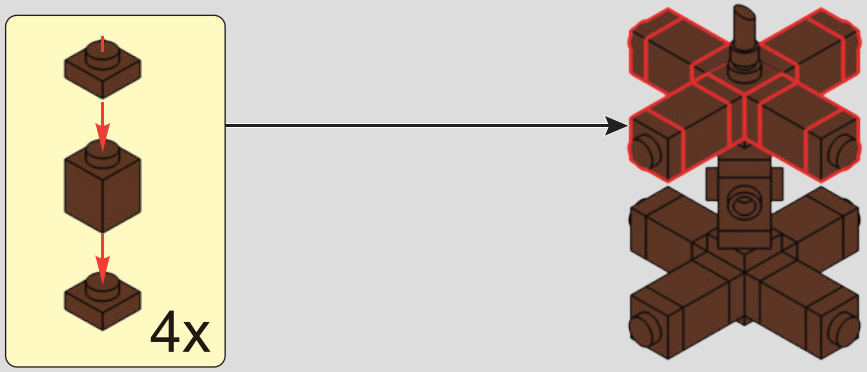

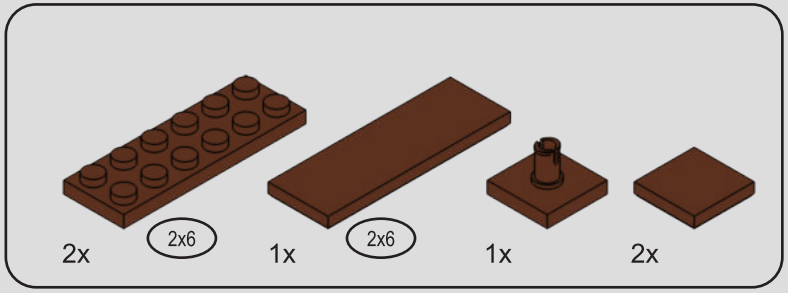

331

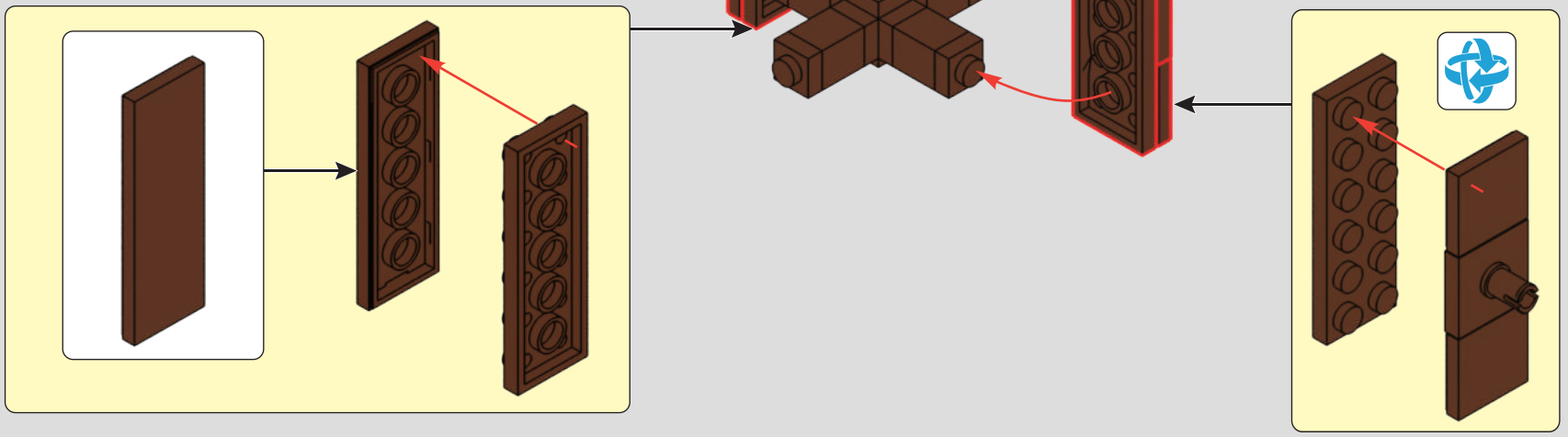

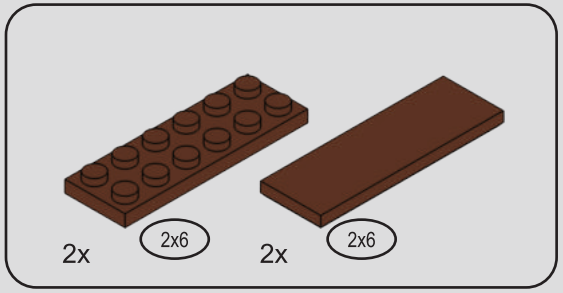

332

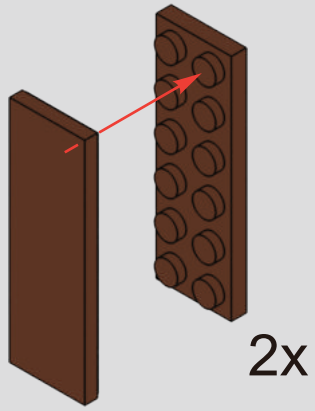

333

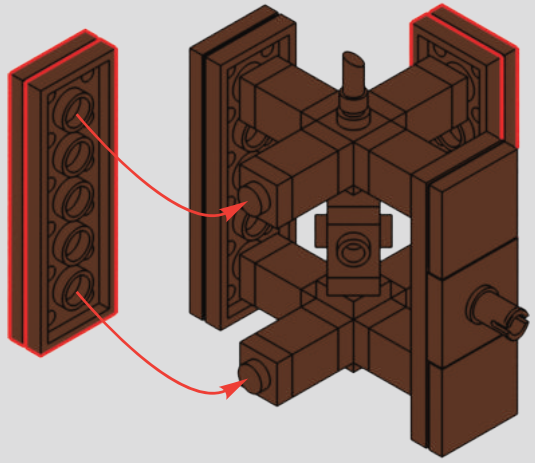

334

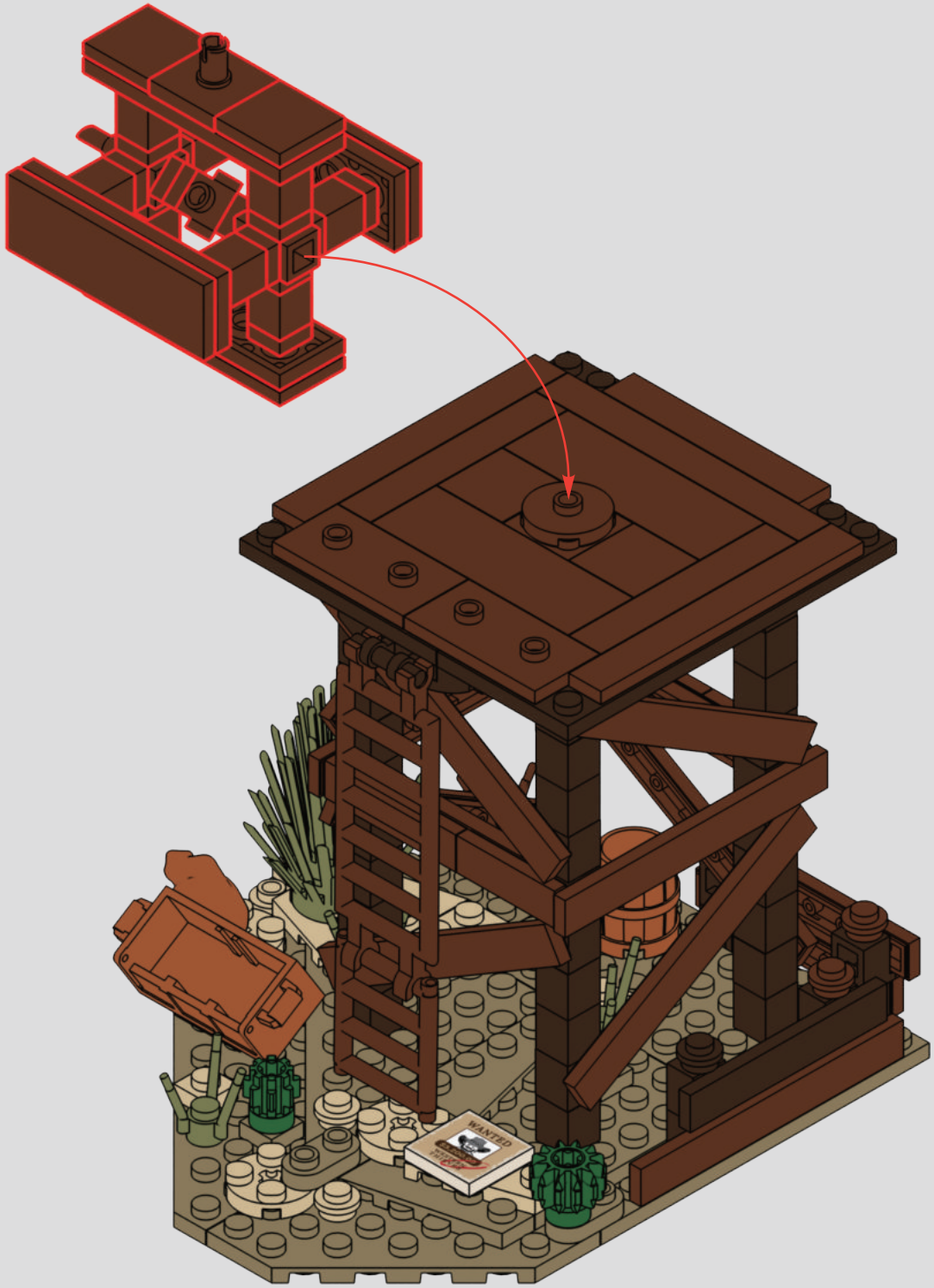

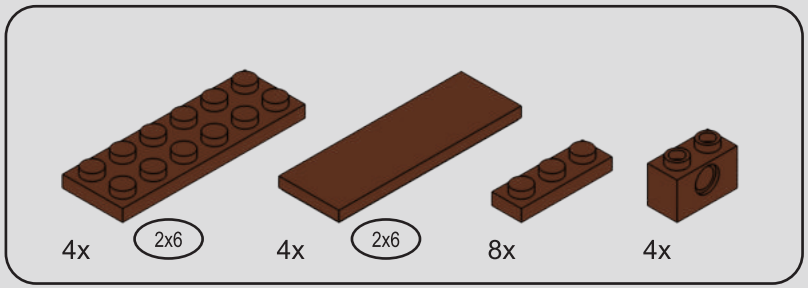

335

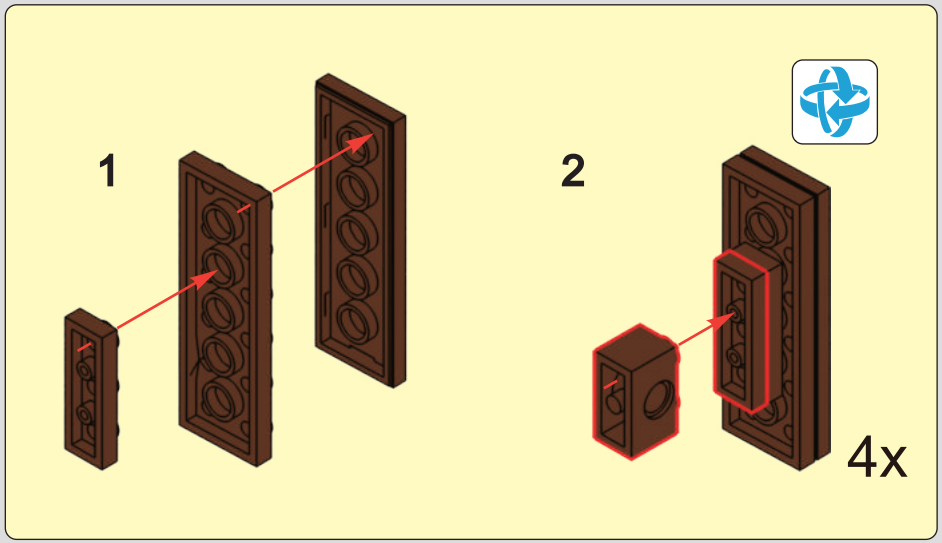

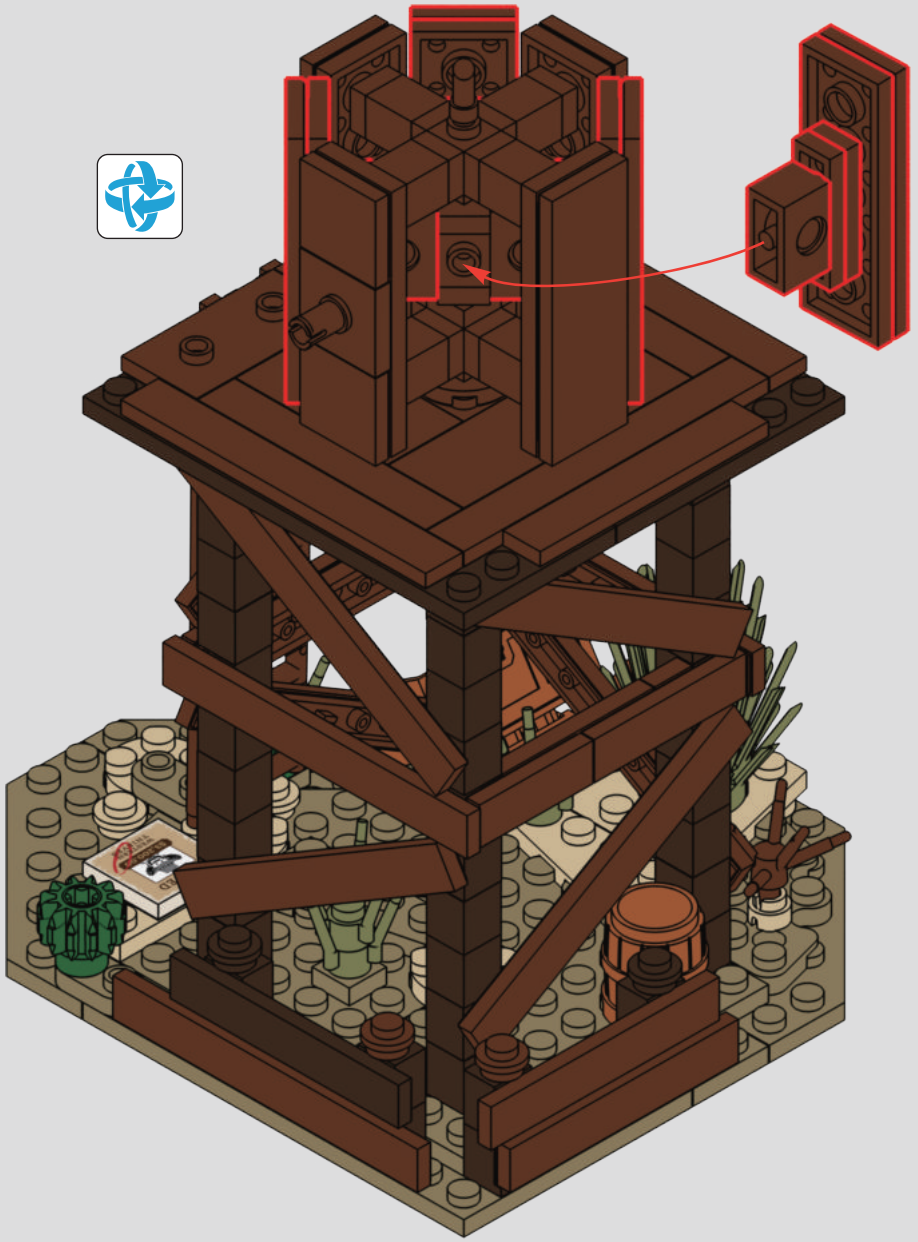

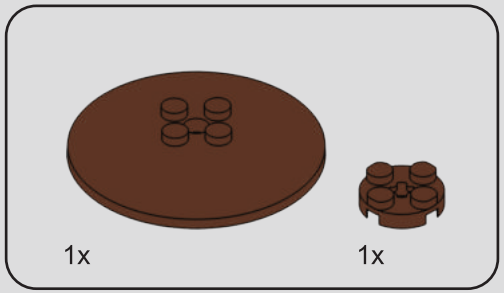

336

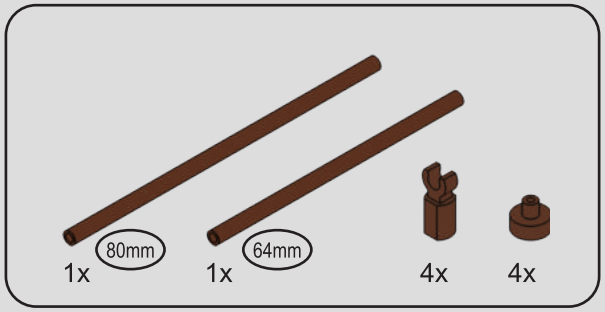

337

1

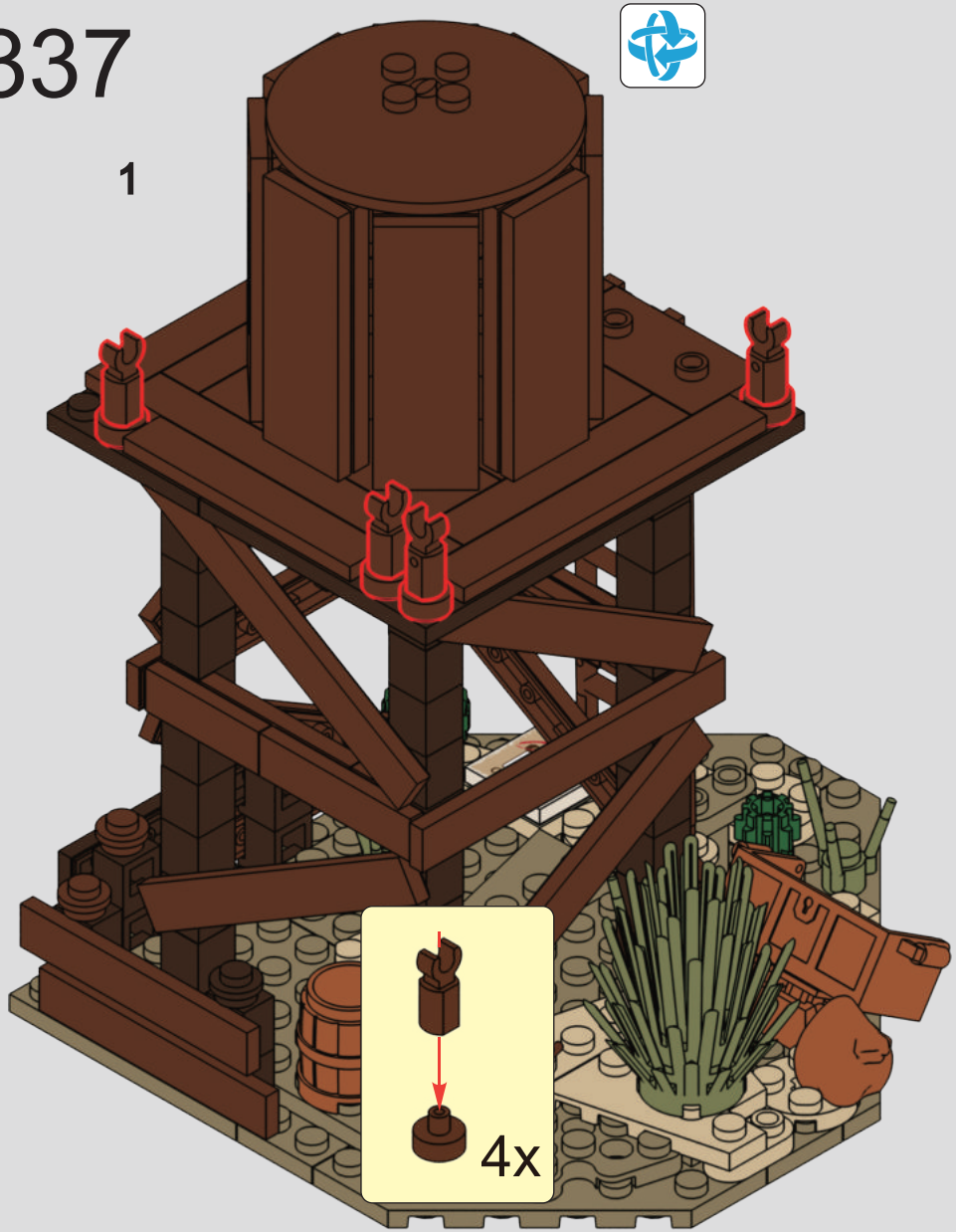

2

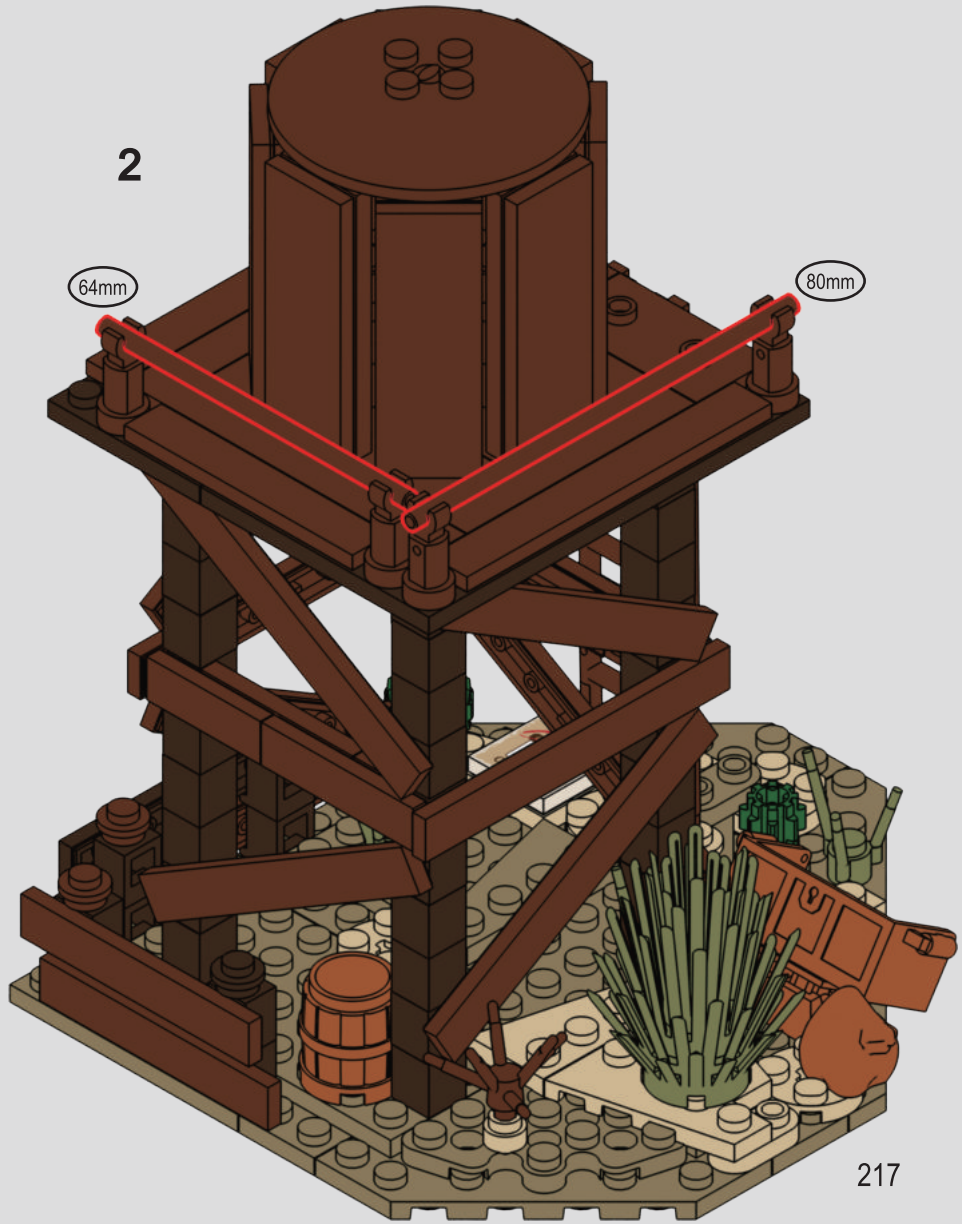

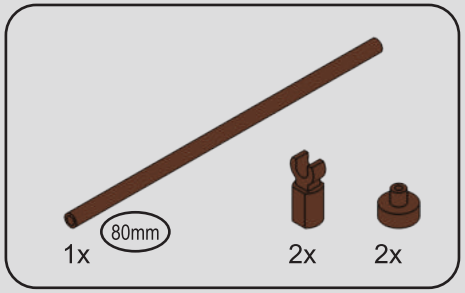

338

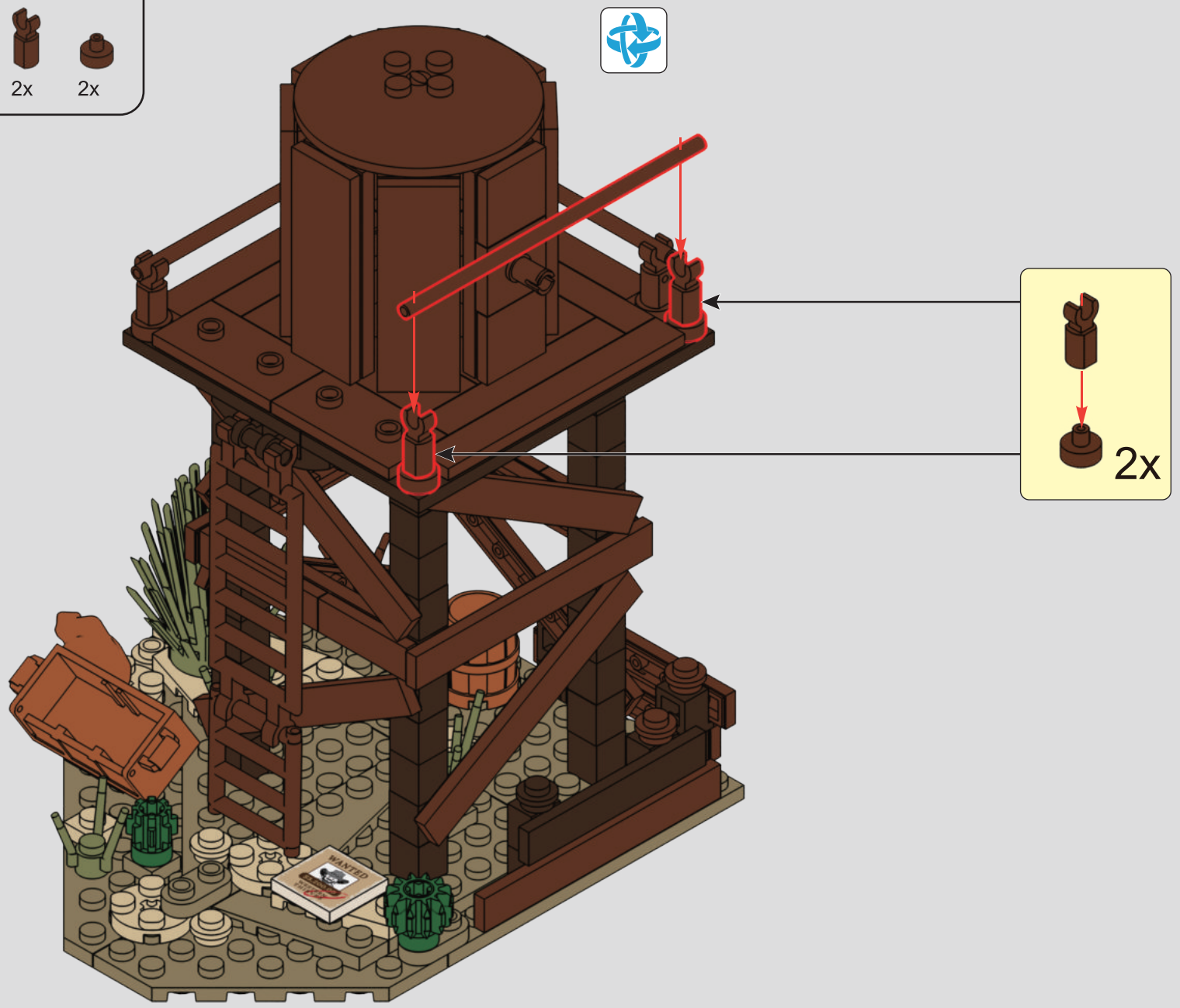

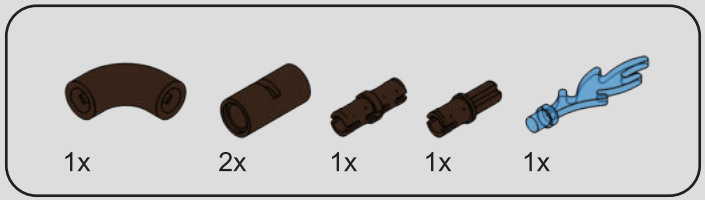

339

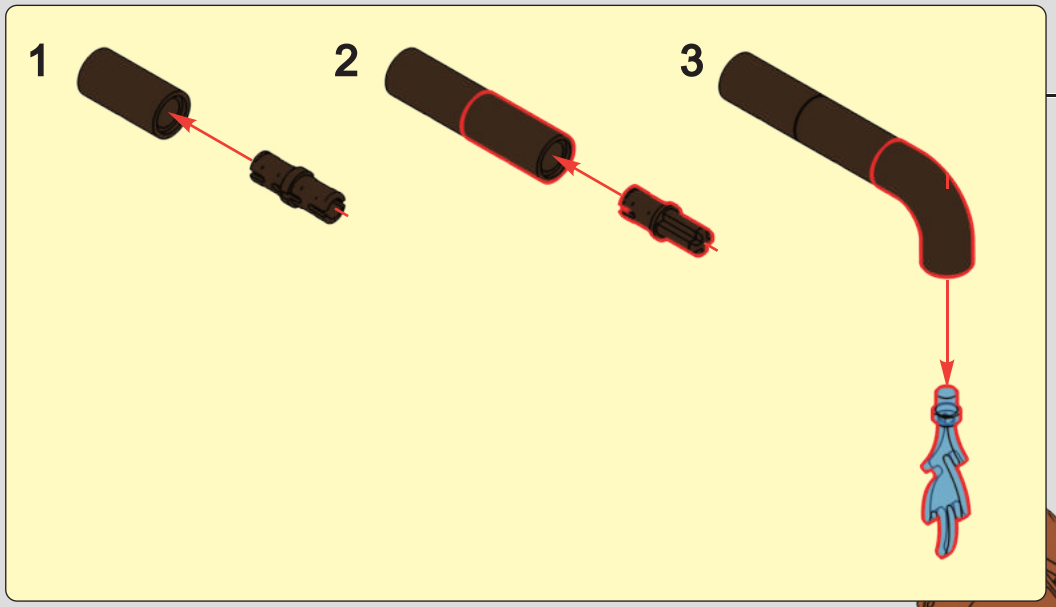

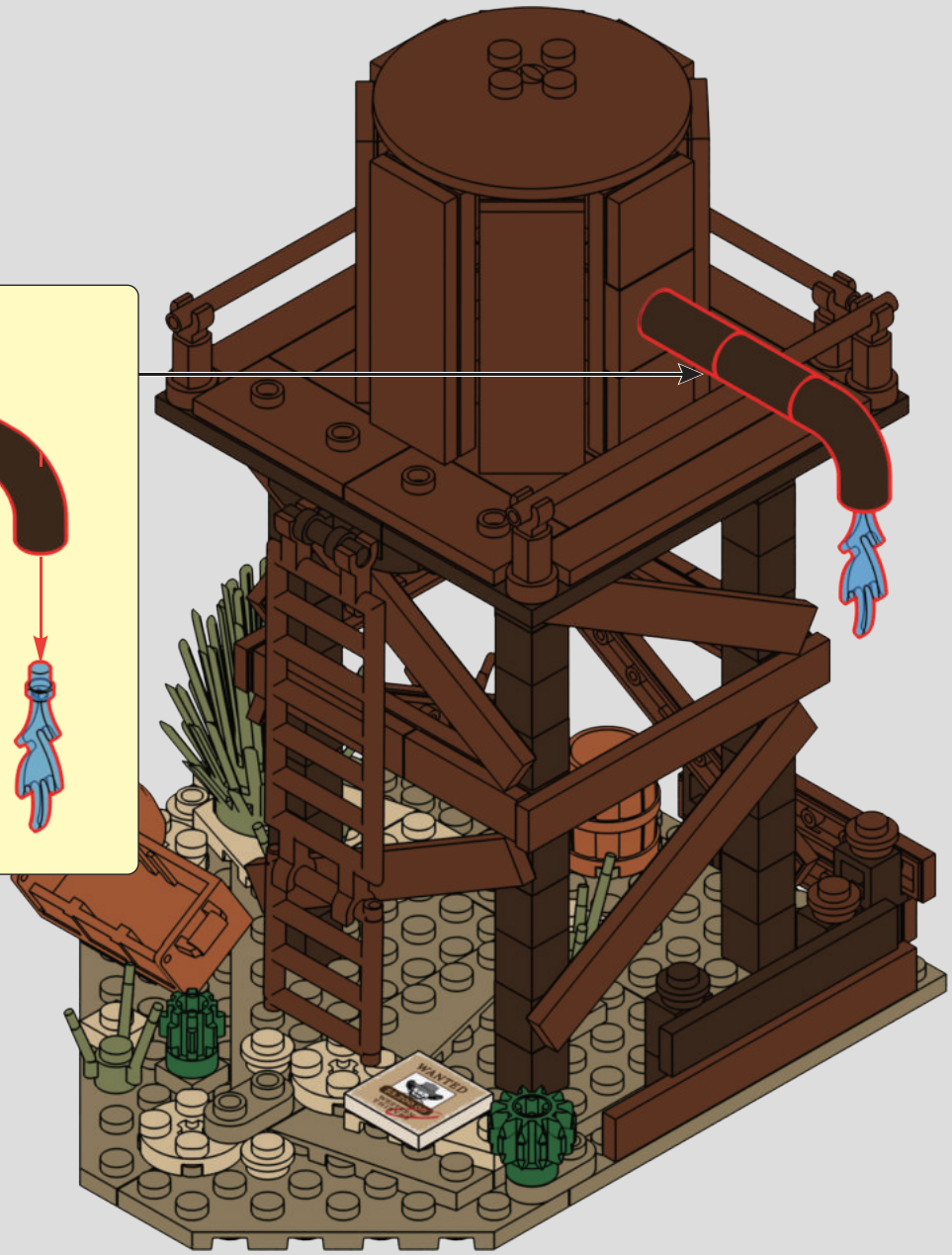

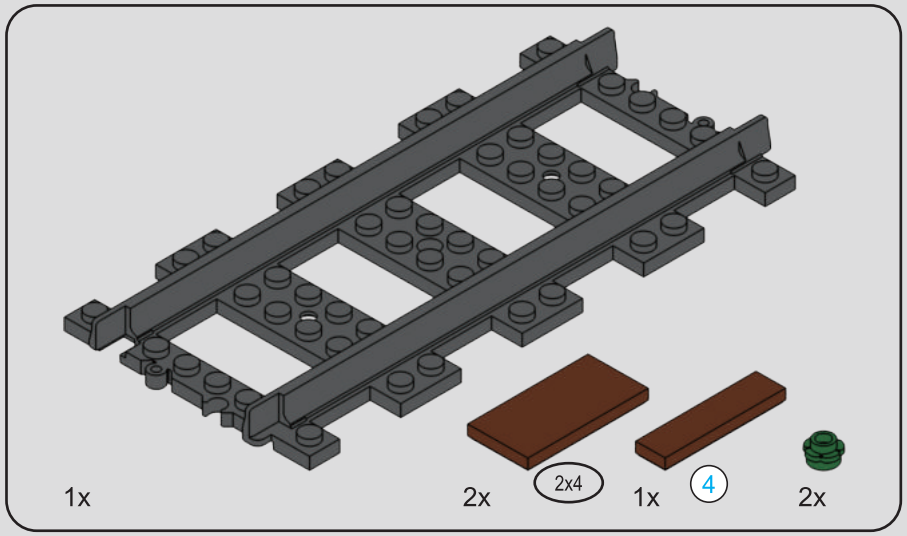

340

1

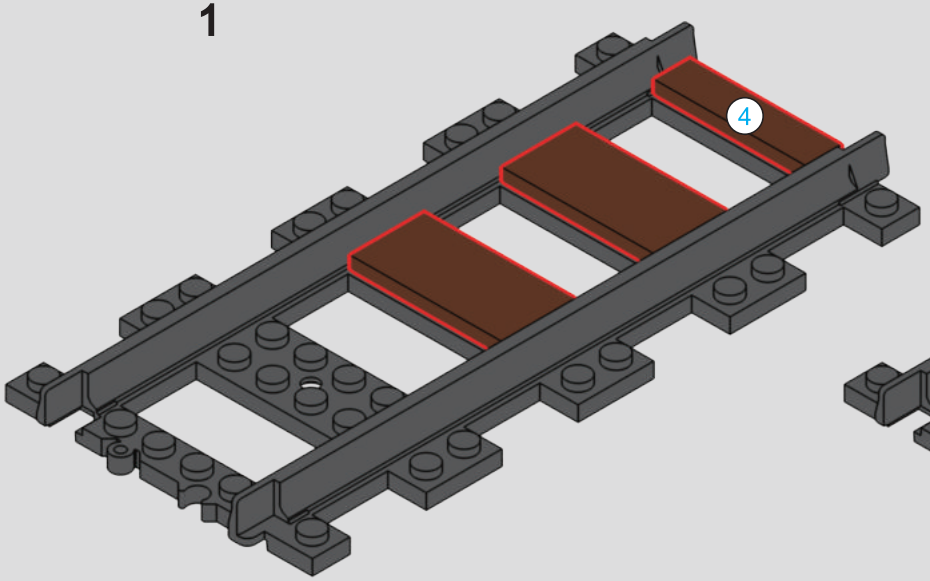

2

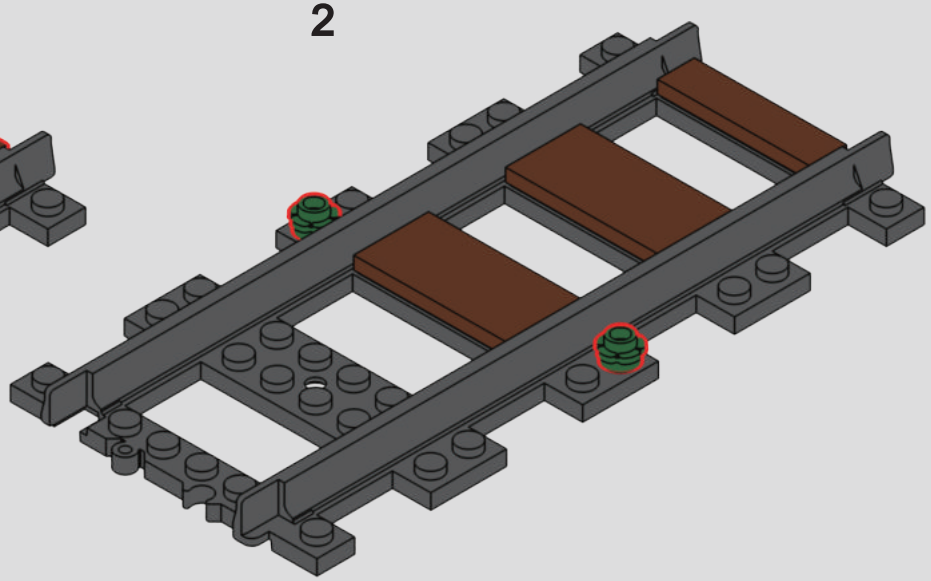

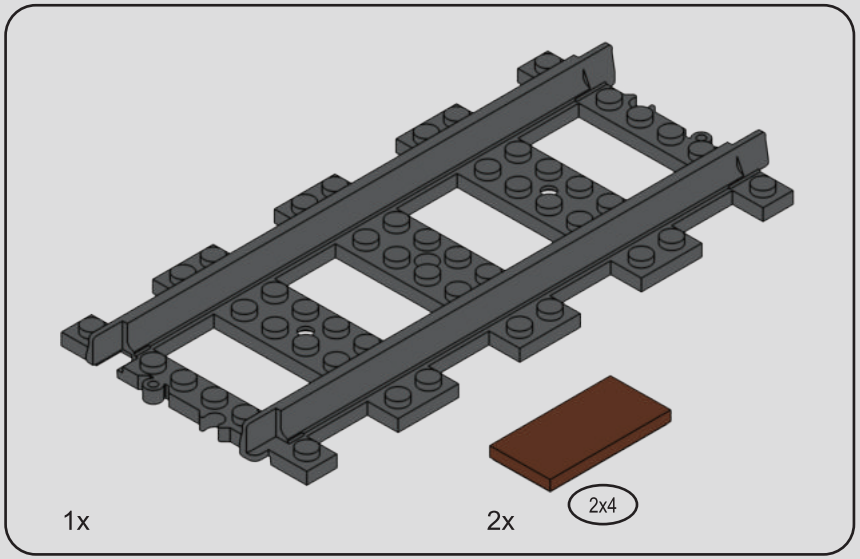

341

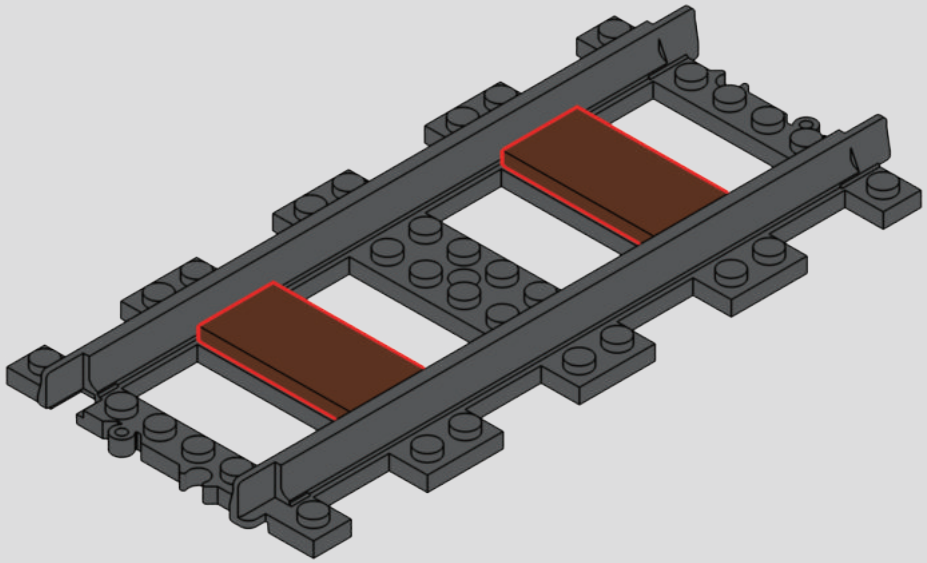

342

1

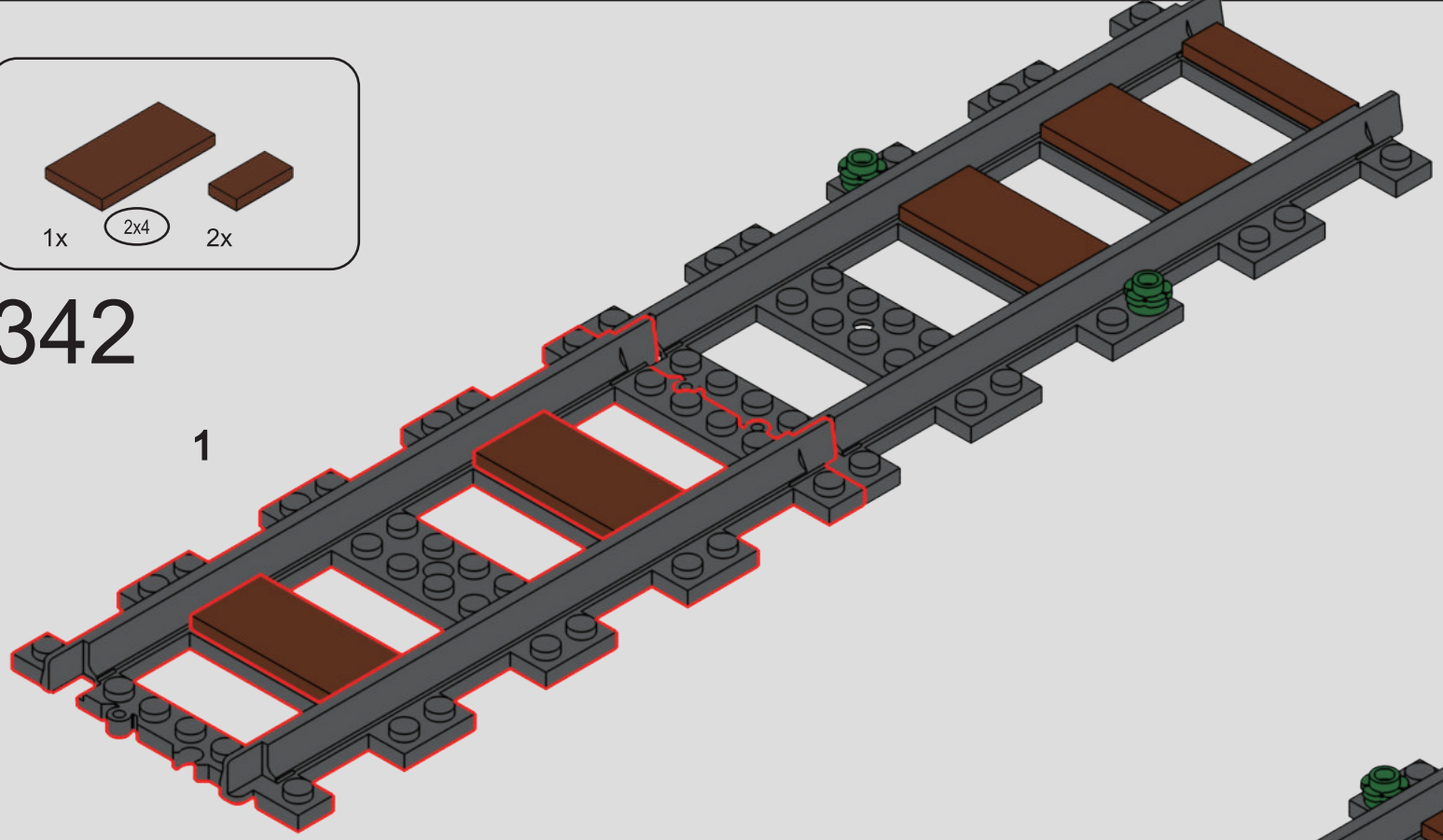

2

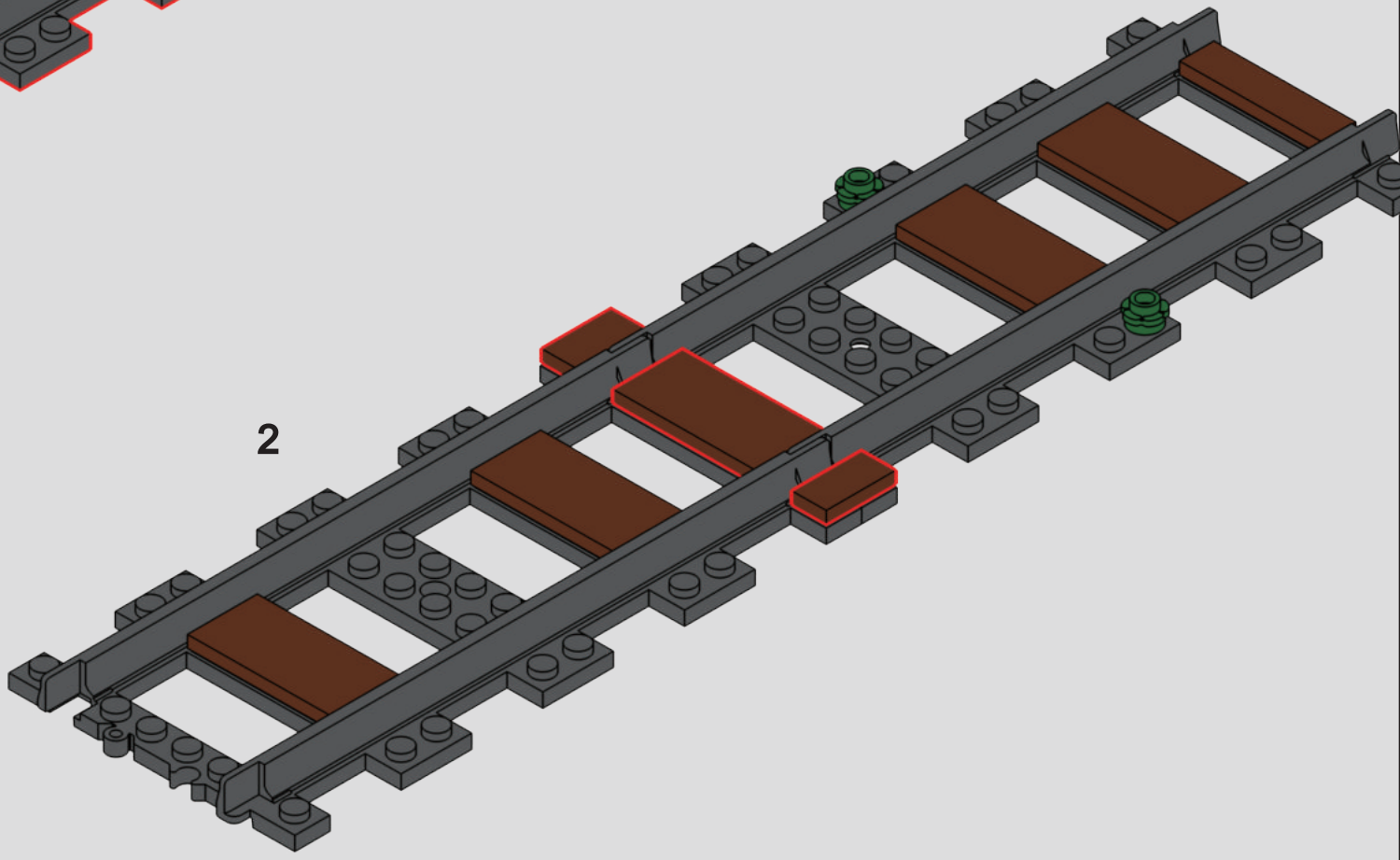

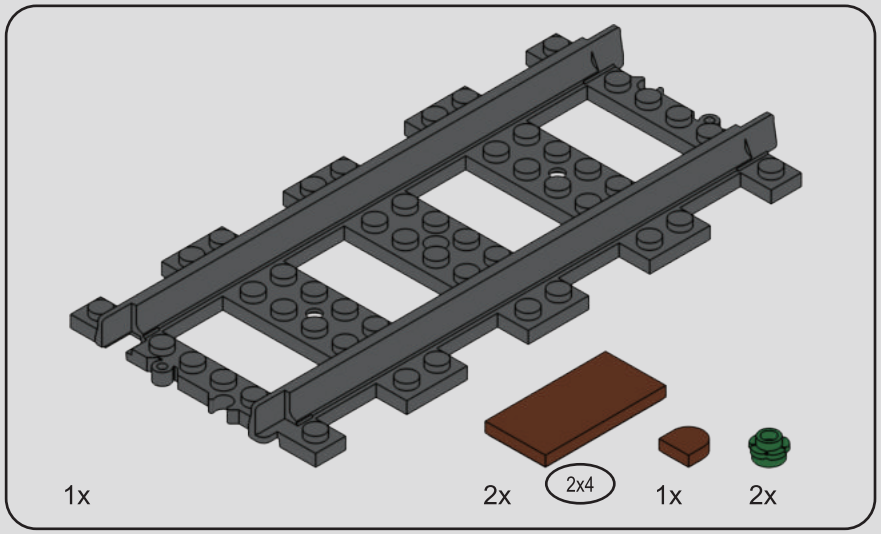

343

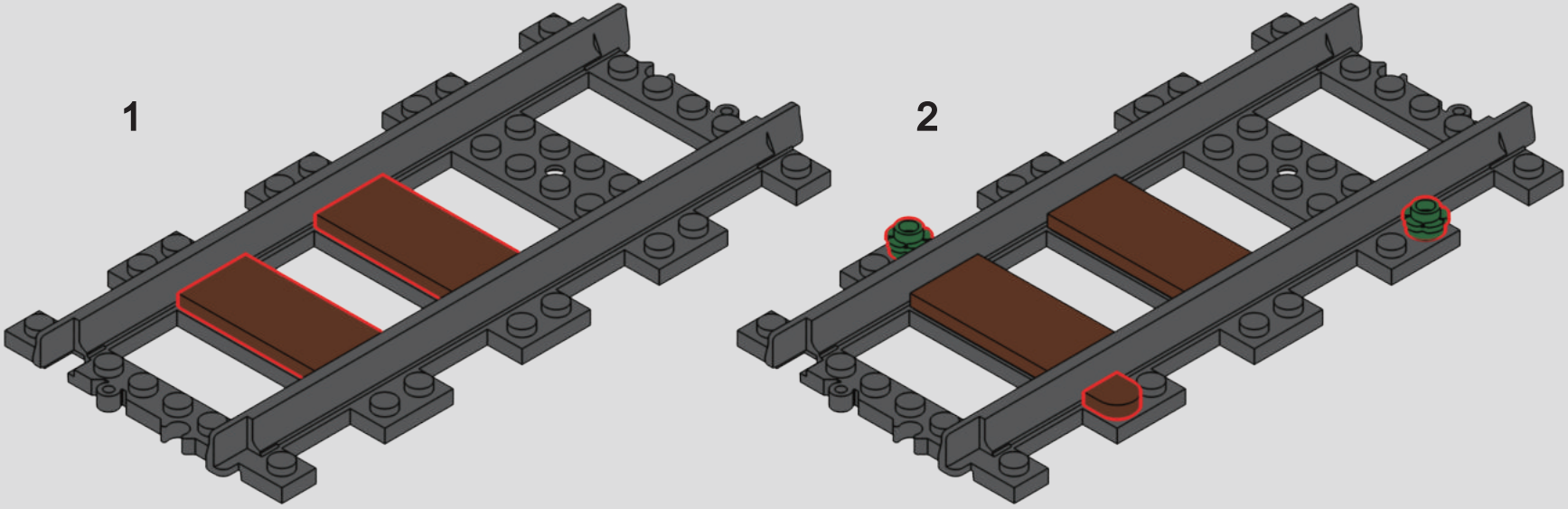

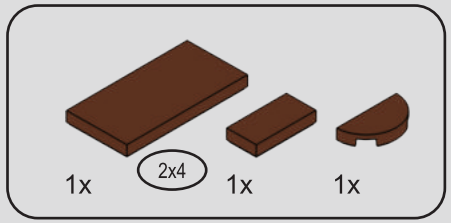

344

1

2

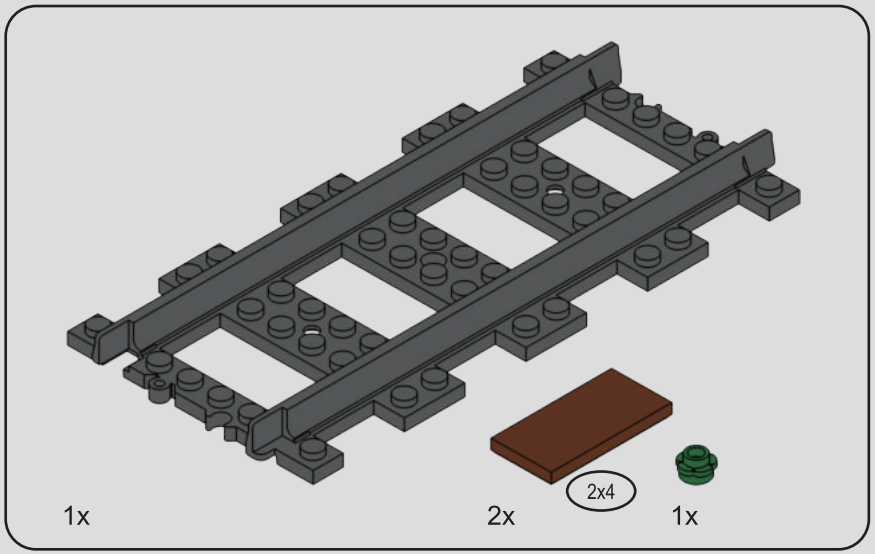

345

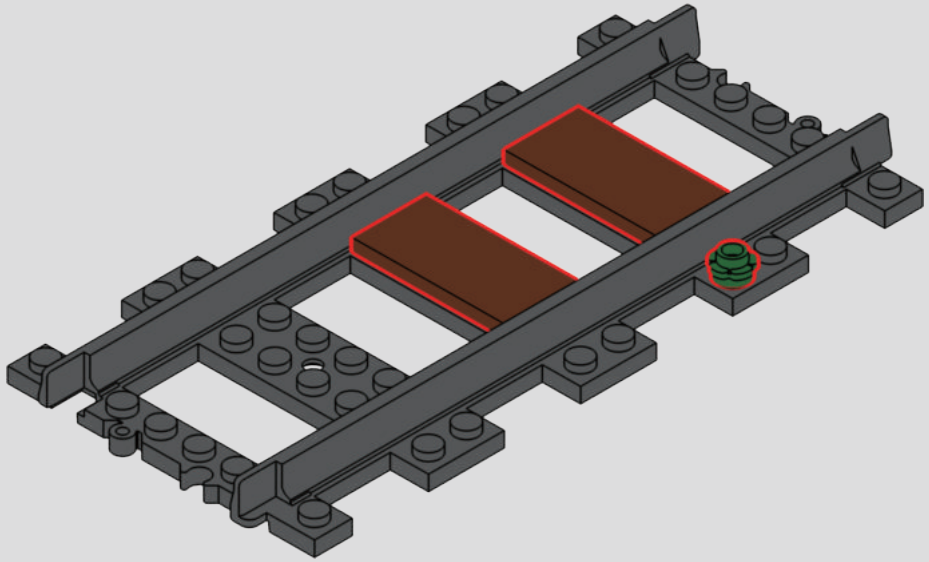

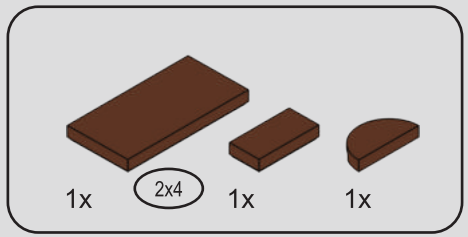

346

1

2

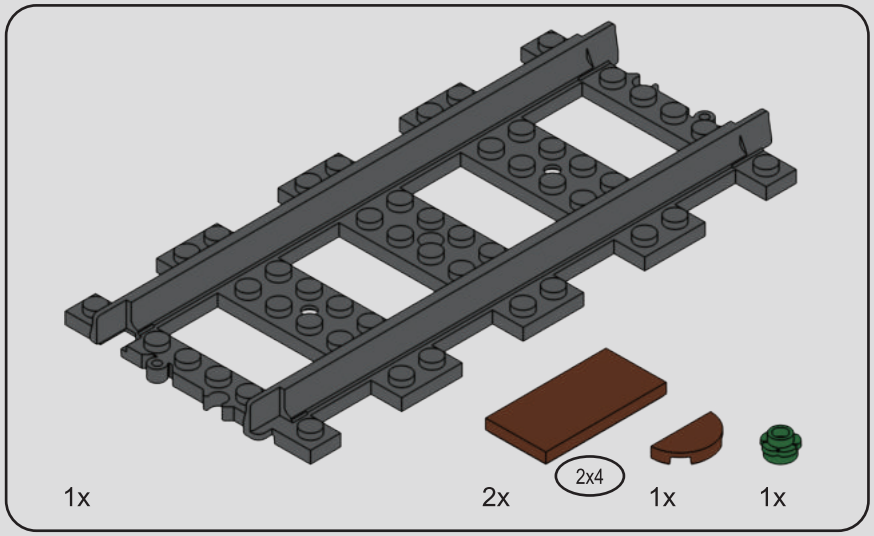

347

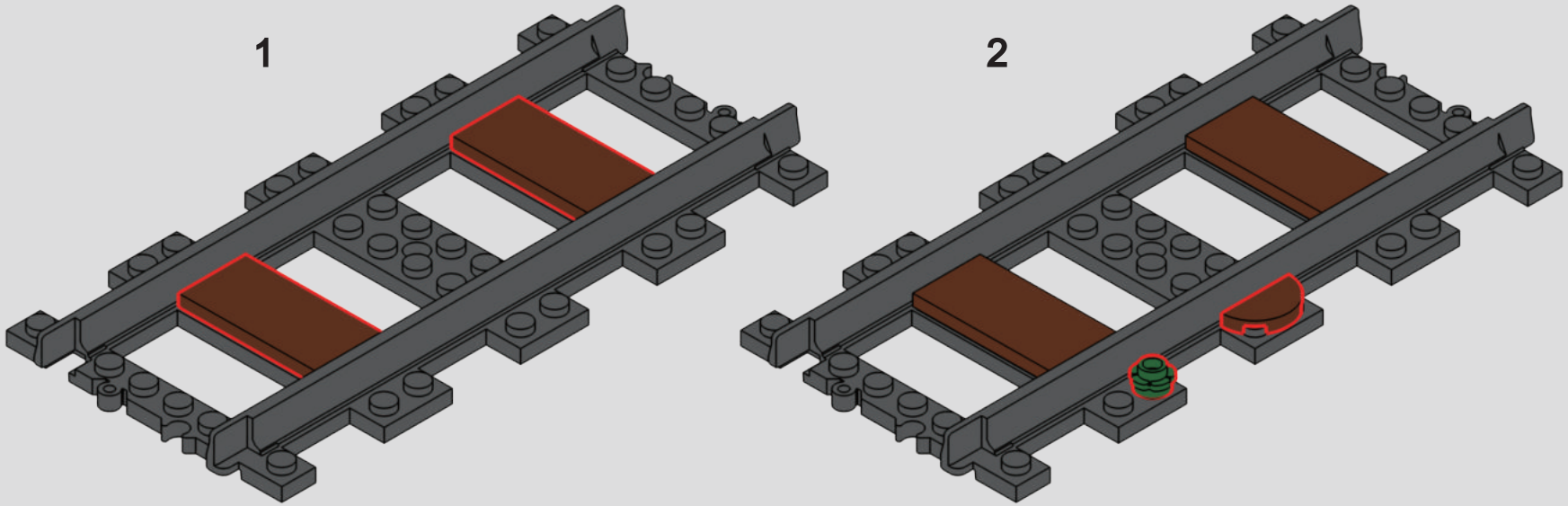

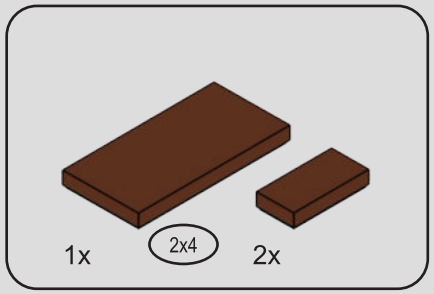

348

1

2

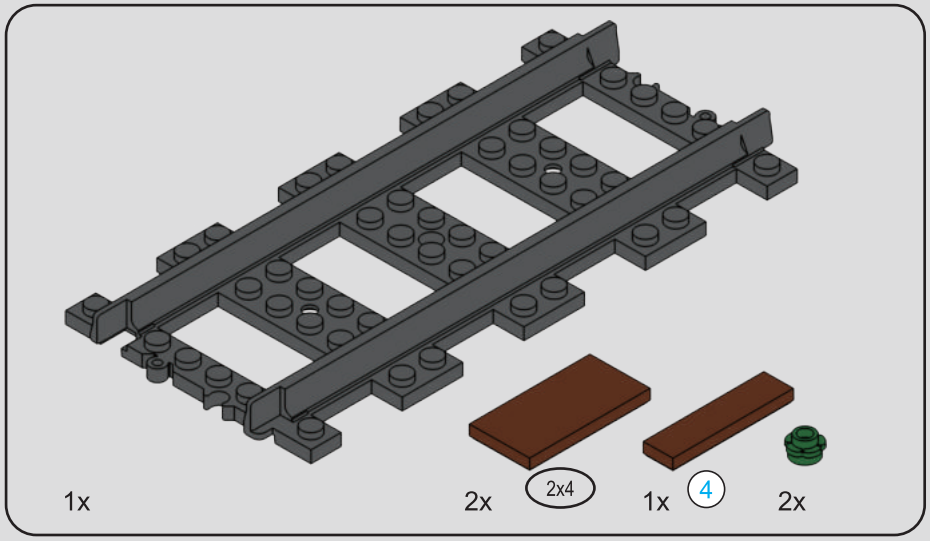

349

1

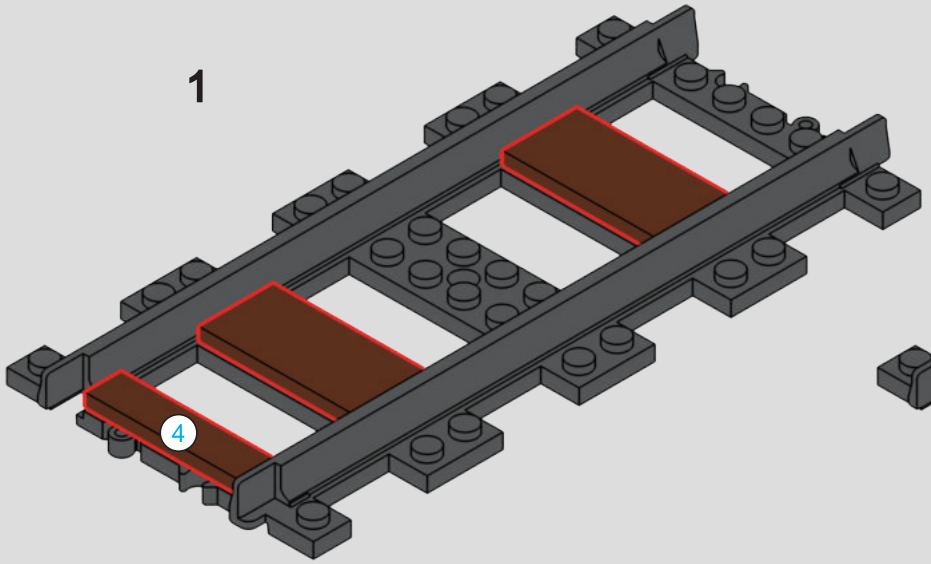

2

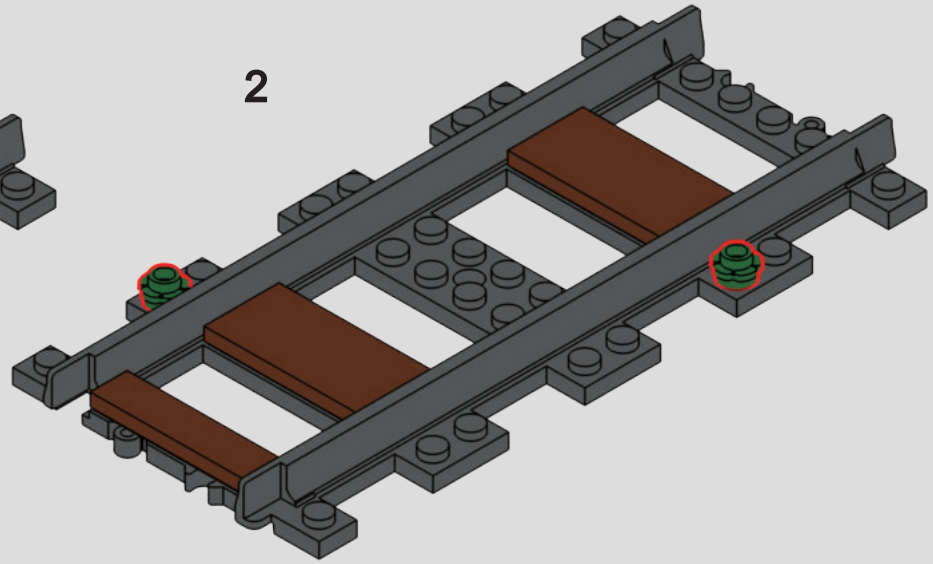

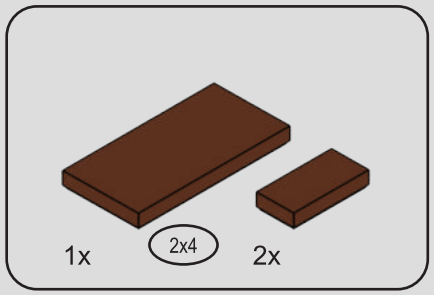

350

1

2

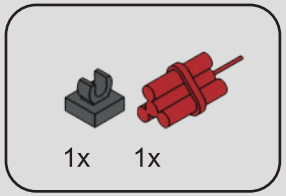

351

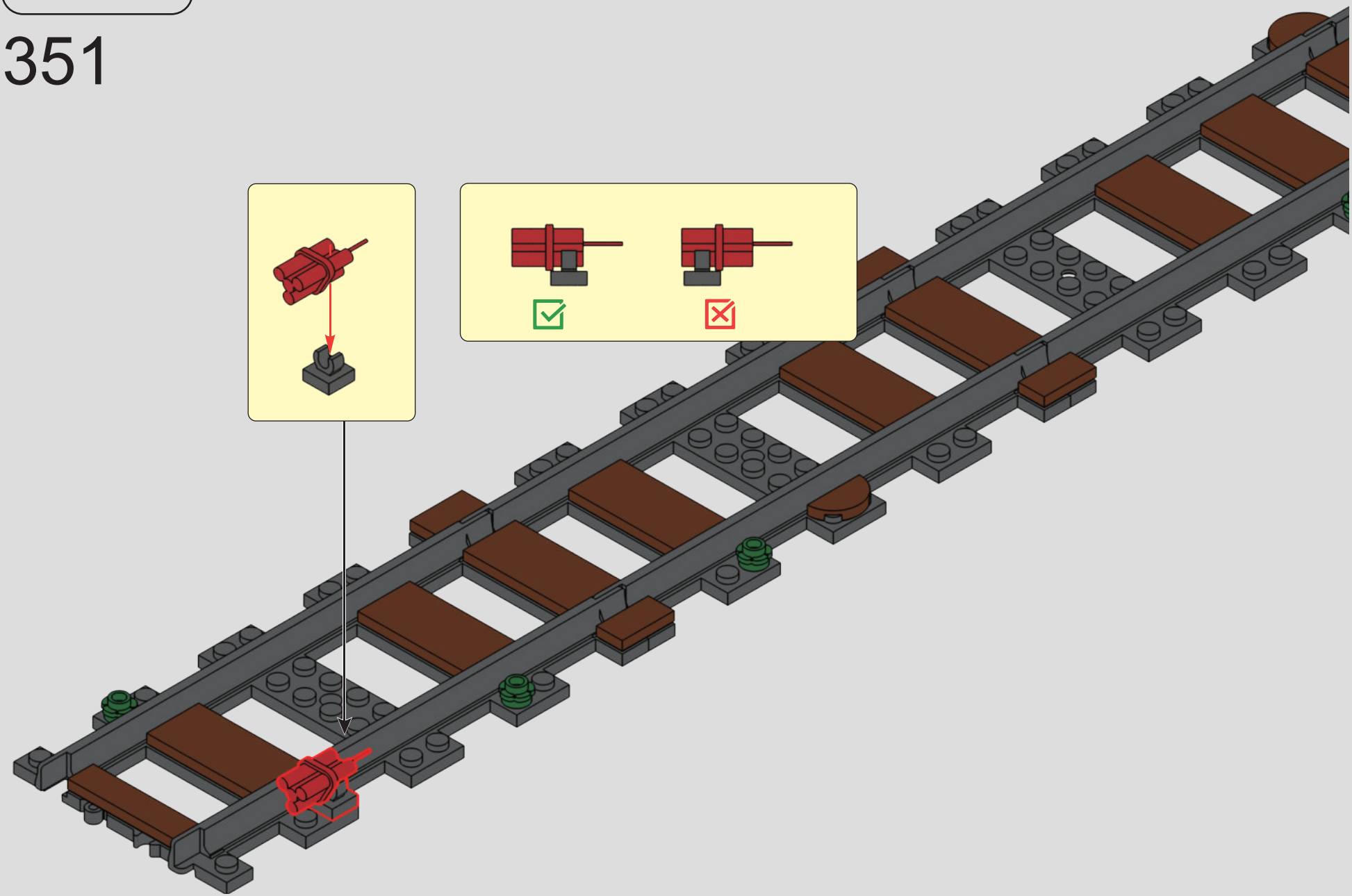

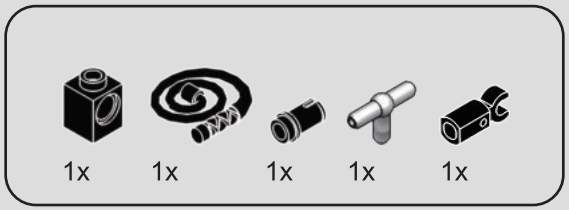

352

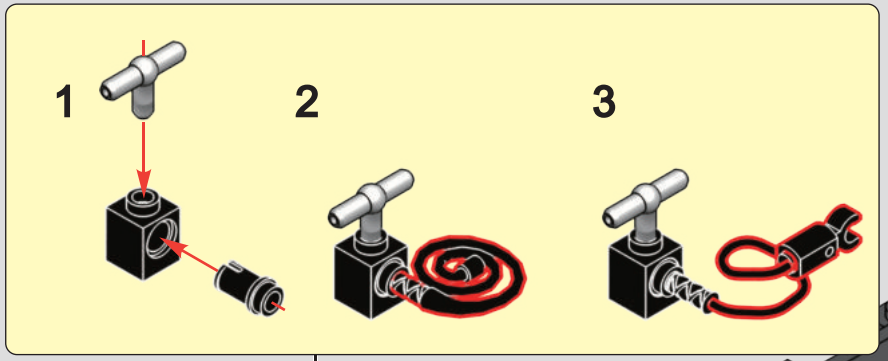

353

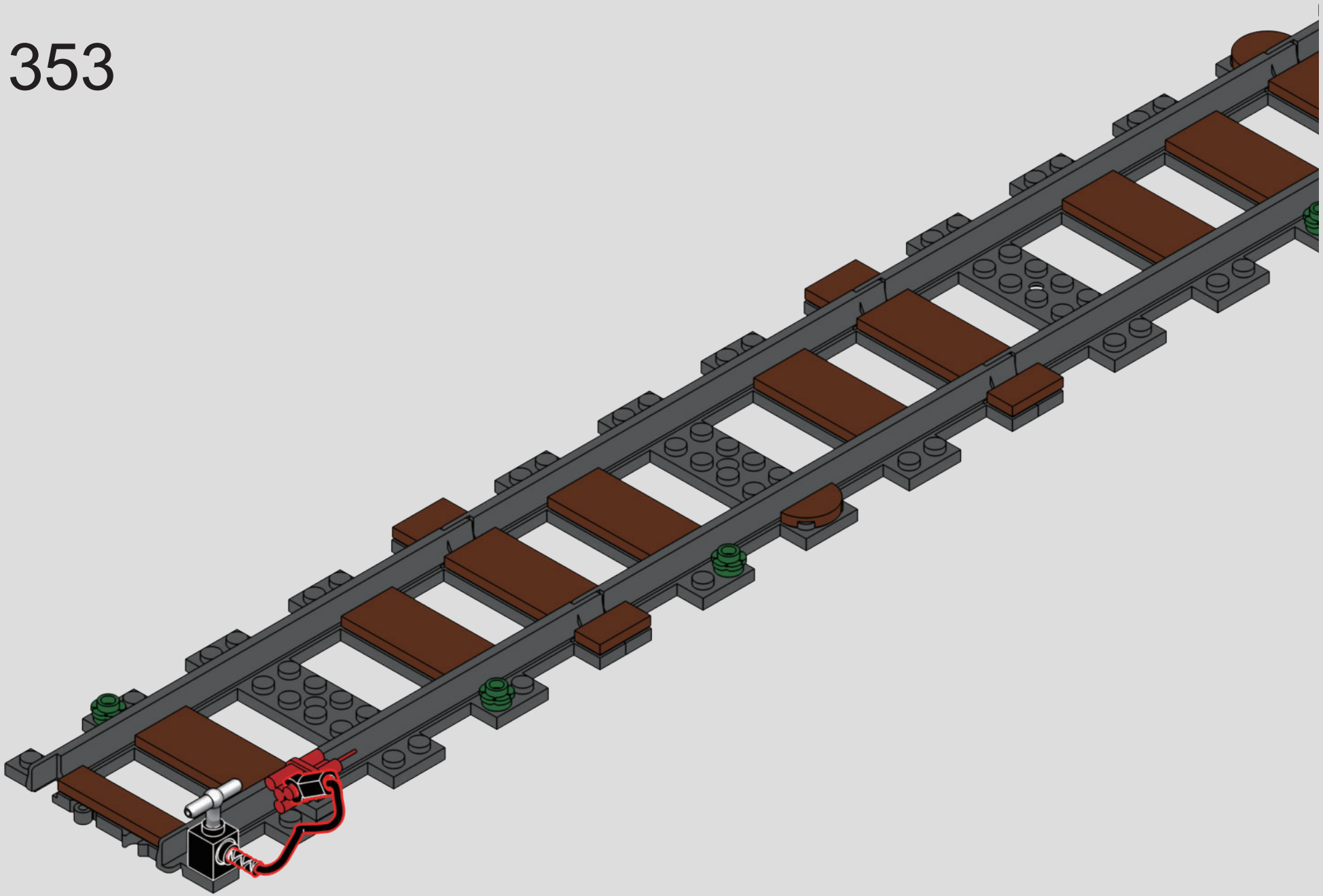

354

1

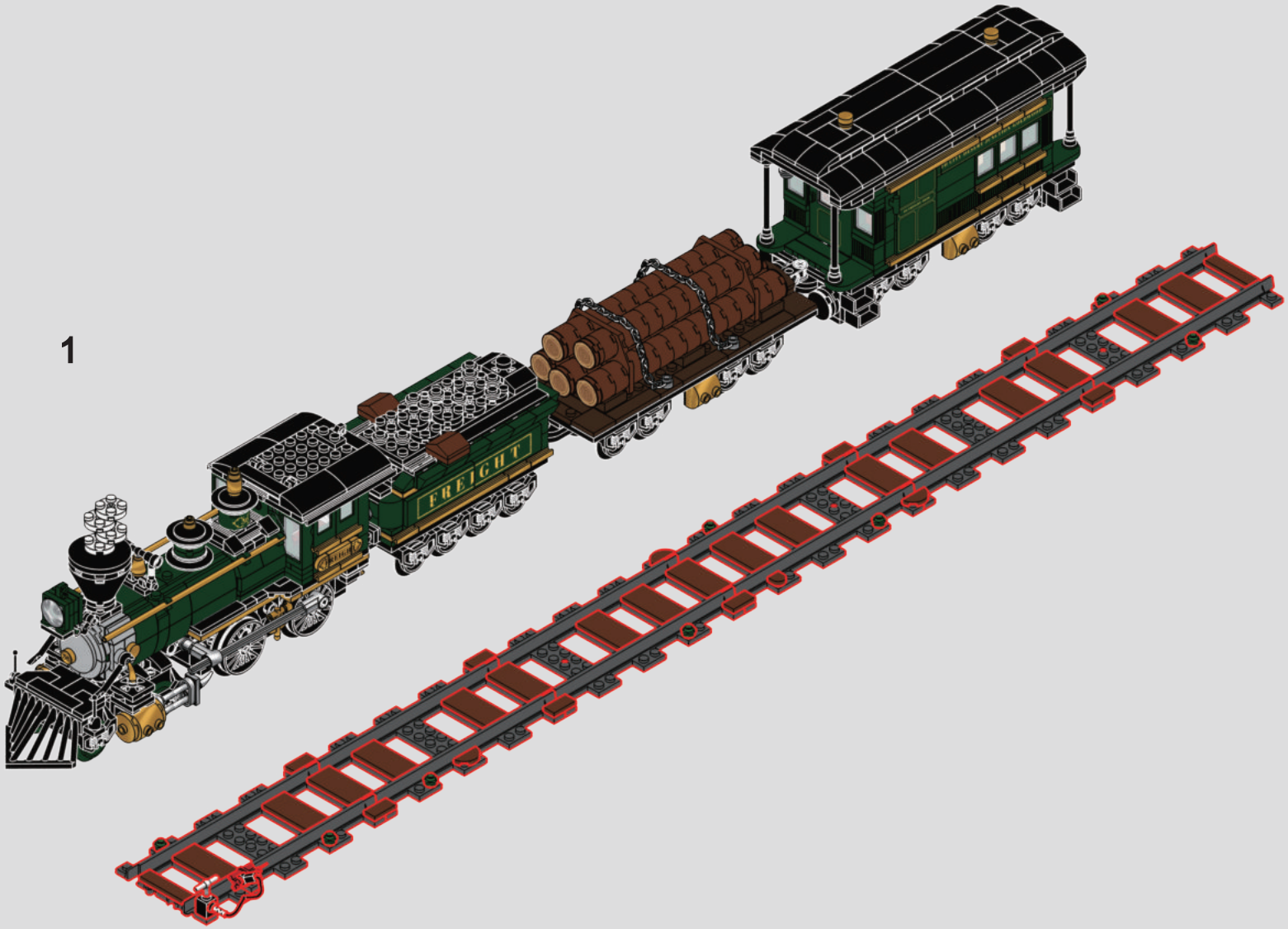

2

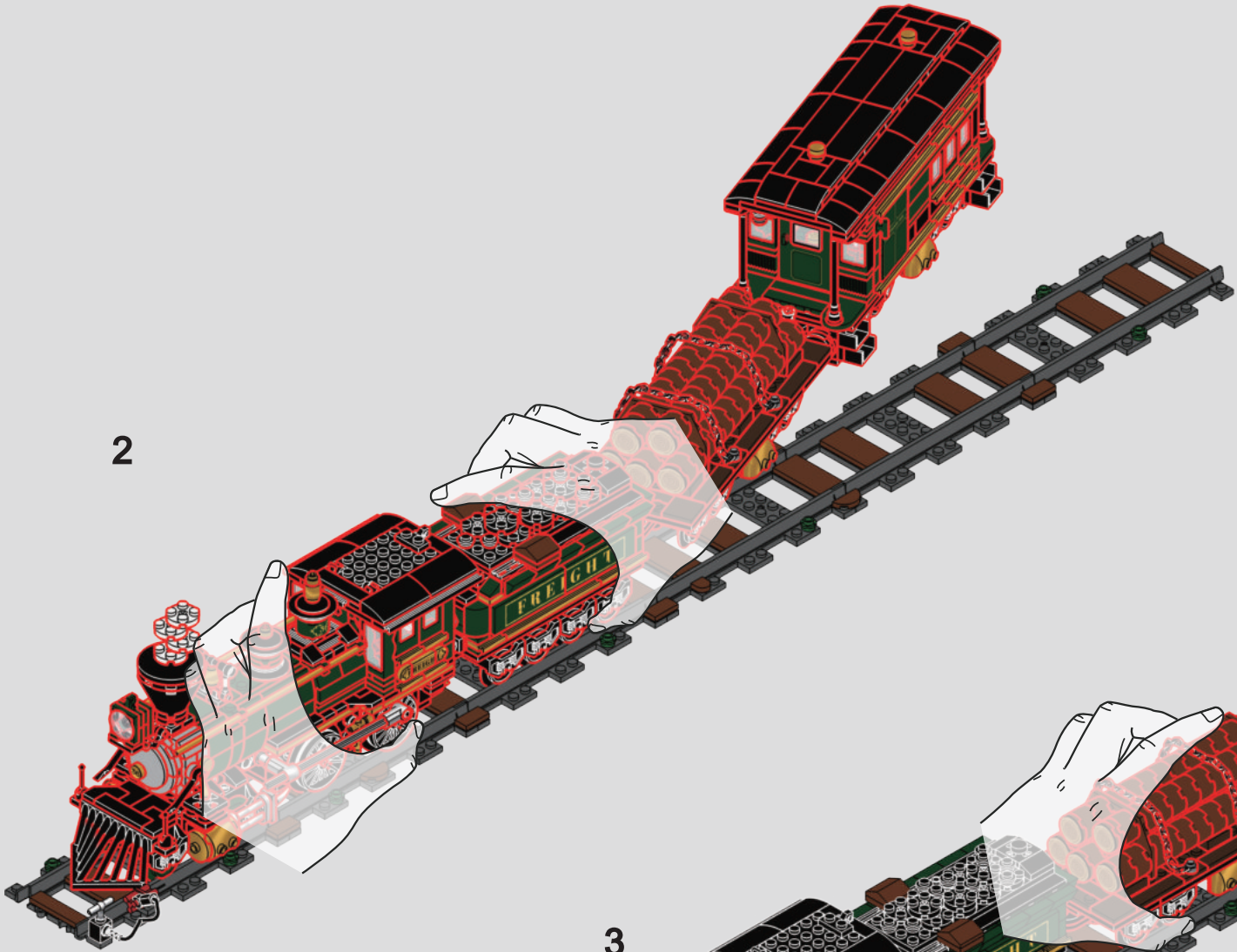

3

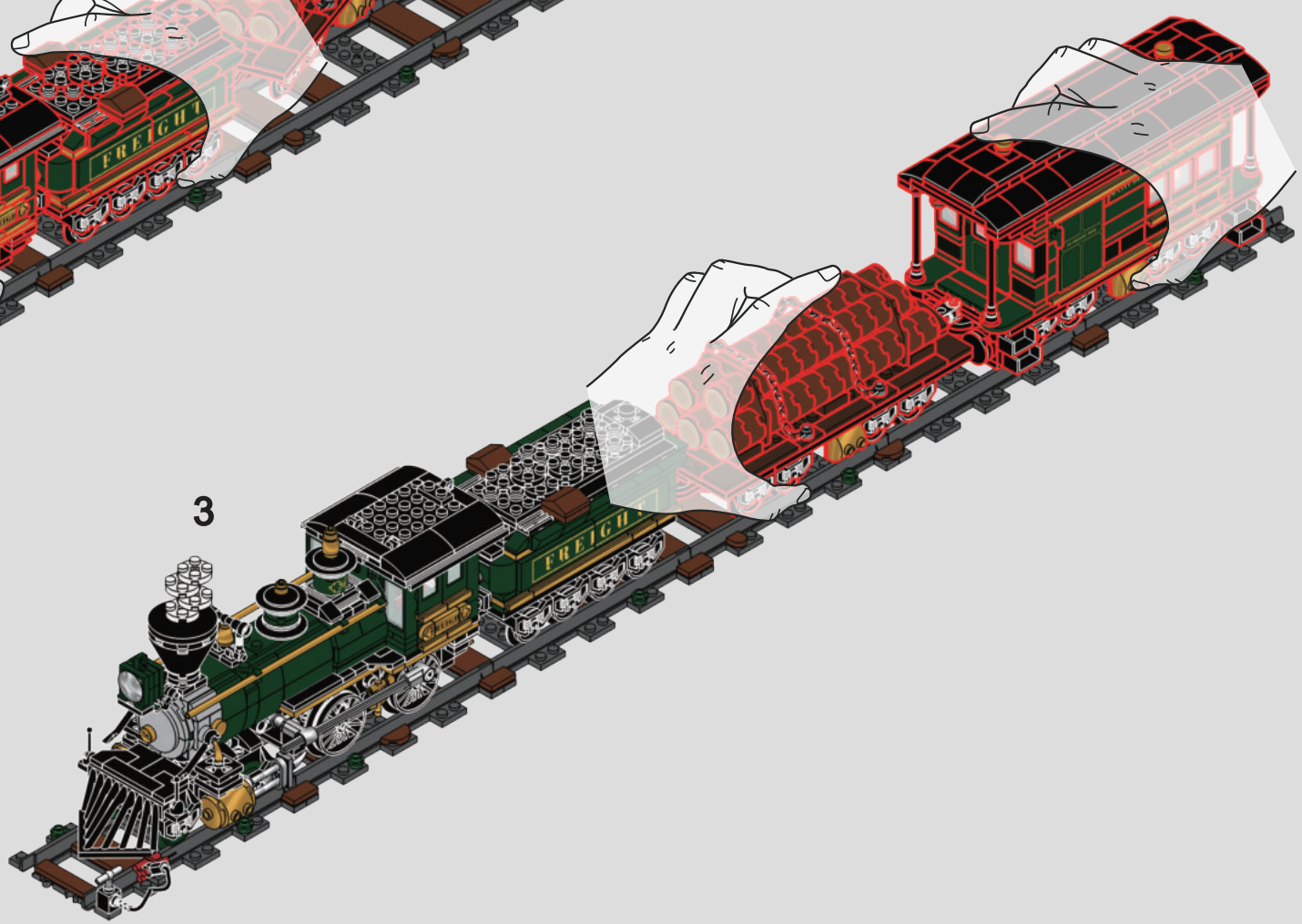

355

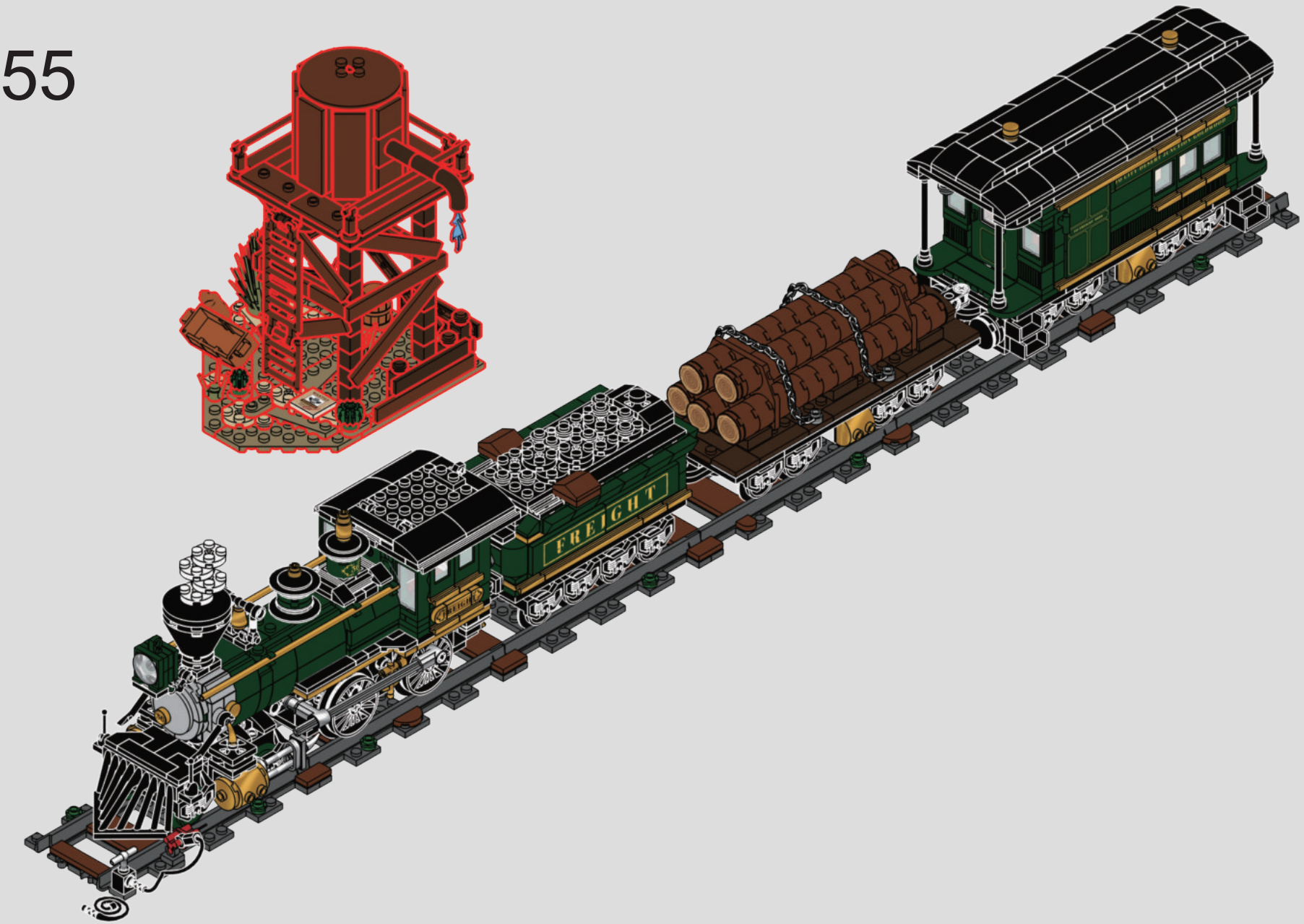

356

THE OLD WEST

We would like your opinion on the new product you have just purchased. Your feedback will help shape the future development of this product series.

Please visit: https://www.funwhole.com/pages/feedback

We sincerely hope you enjoy the product and we can't wait to see you again soon.Please let us know if we can do anything else to help!

• THE OLD WEST

F9021
Western Saloon

F9026
Old West Sheriff's Office

•FARM LIFE

F9029
Farm Store

F9030
Carpentry Van

F9016
The Farm Truck

F9025
Tractor

• RETRO HOUSE

F9022
Lookout Campground

FH9001
Wood Cabin

FH9004
Lakeside Lodge

F9013
A-Frame Cabin

F9018
Hunting Cabin

• STEAMPUNK WORLD

F9007
Steampunk Train Station

F9017
Steampunk Trading Center

• TOWN LIFE

F9023
Newsstand

F9031
Book Cafe

F9033
Newsstand

• MIDDLE AGES

F9015
Medieval Market

F9011
Medieval Pier Inn

F9024
Medieval Apothecary Shop

Funwhole and the funwhole logo are
trademarks of the funwhole group.

WWW.FUNWHOLE.COM