LUMIBRICKS™

21001
2632PCS
16+

2

Scan the QR code
for a PDF instruction

扫码关注公众号
获取电子版说明书

Wheat Field with Cypresses

By Vincent van Gogh

ABOUT LUMIBRICKS

Welcome to Lumibricks, where imagination meets illumination in the brick world!

Formerly known as FUNWHOLE, the world's first lighting bricks manufacturer, Lumibricks continues its legacy as a trailblazer in the world of building brick sets with a unique twist - integrated lighting that transforms every creation into a radiant masterpiece.

Every Lumibricks' set celebrates the joy of building and the magic of illumination. Whether you're crafting intricate architectures or imaginative scenes, the design details and lighting features bring the sets to life, and also bring you joy and shine whether it is the day or night.

At Lumibricks, we believe in the power of light to transform and elevate. With our slogan, "Delight day and night," we invite you to explore the possibilities of illuminated brick sets. Discover a hobby that doesn't just shine - it glows with your inner creativity.

欢迎来到Lumibricks灯搭的乐园

在这里，我们不仅仅是玩具制造商，我们还是创造快乐的艺术家。

自2014年诞生起，Lumibricks灯搭（原FUNWHOLE）就坚守一个独特的愿景：在日与夜的交替中，为我们的玩家揭示积木之美的无限可能。

作为全球领先的灯光积木品牌，本着充分表现积木套装整体之美的初衷，Lumibricks致力于灯光积木套装产品的开发，将积木与灯光合为一体。

Lumibricks不仅仅是一套普通的积木，更是代表了一种全新的玩乐方式，每一块积木，每一束光线，都承载着我们带给全球数百万家庭更多欢笑的承诺。

我们相信，积木有灯，生活有光，让Lumibricks与你一起，拼搭出更多乐趣，创造属于你的灯光宇宙。

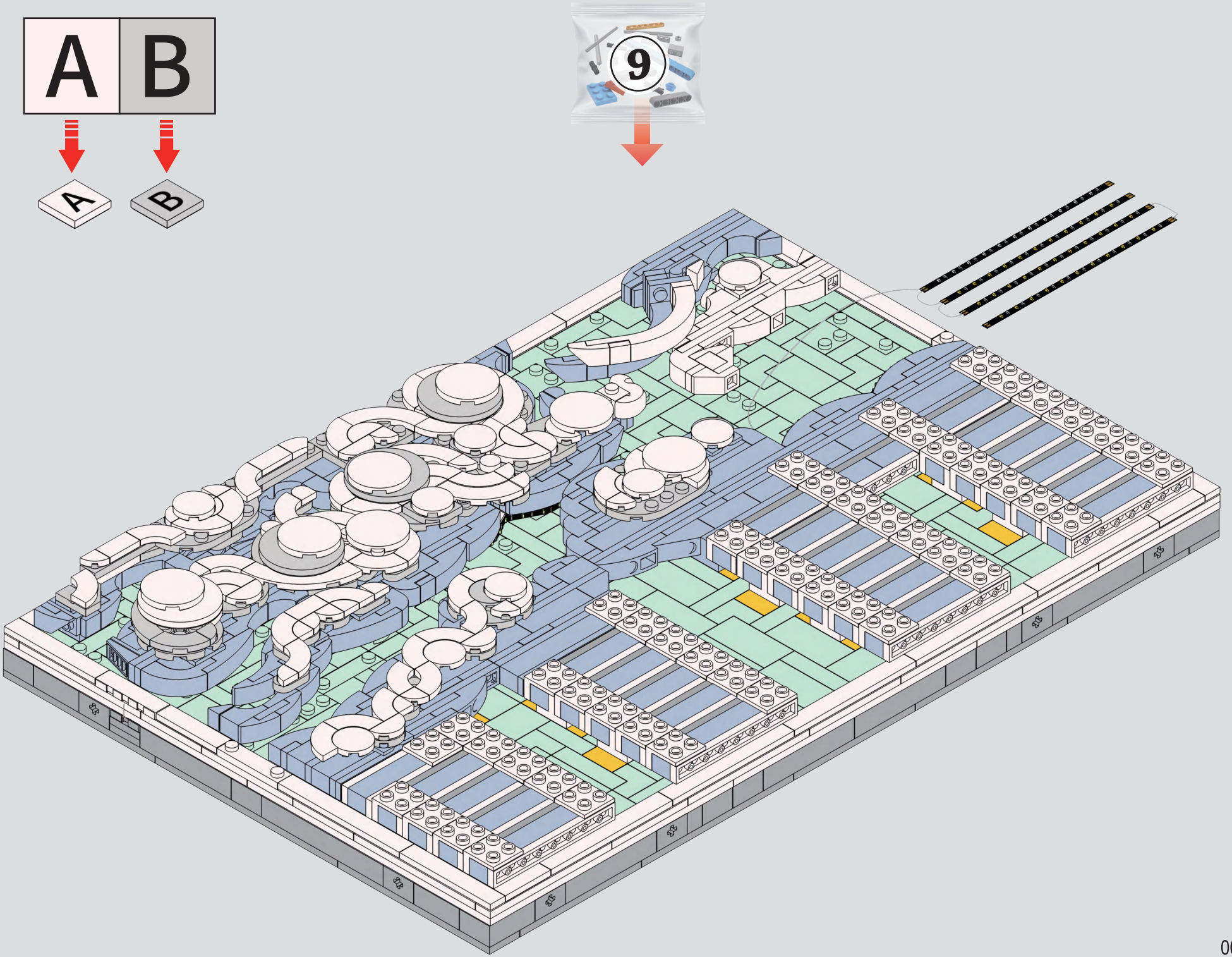
A
B
A
B
9

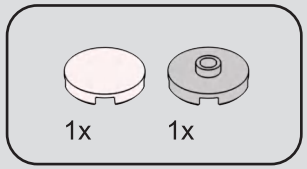

1

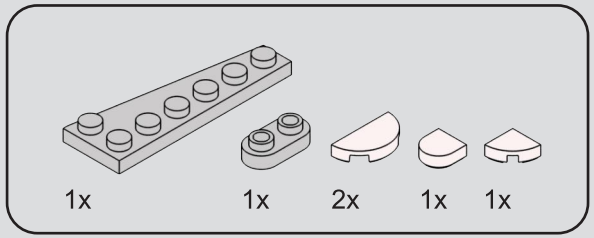

2

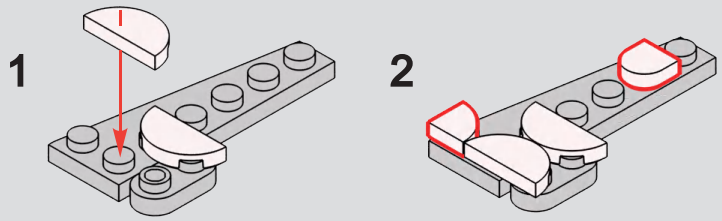

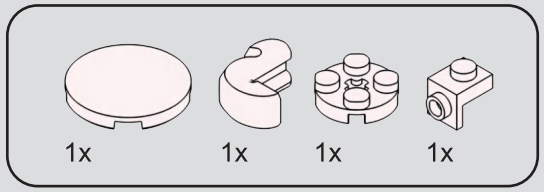

3

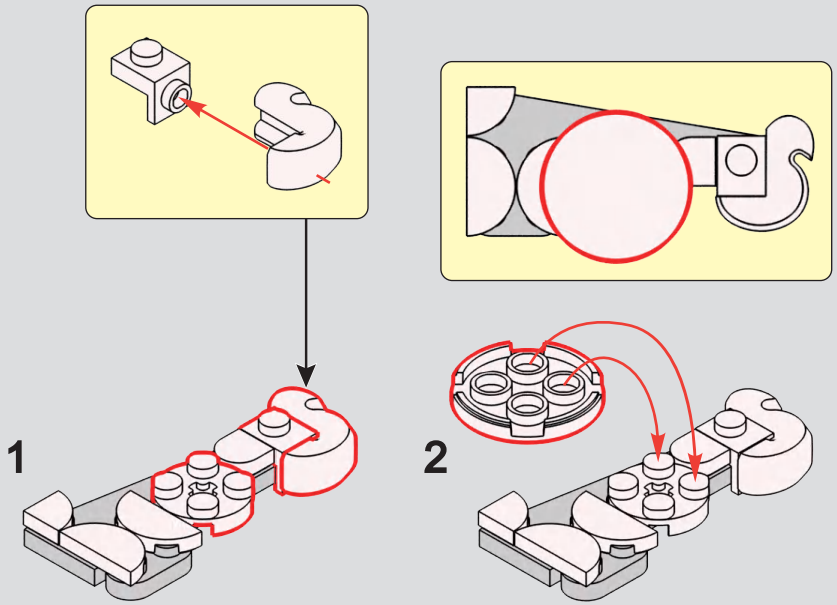

4

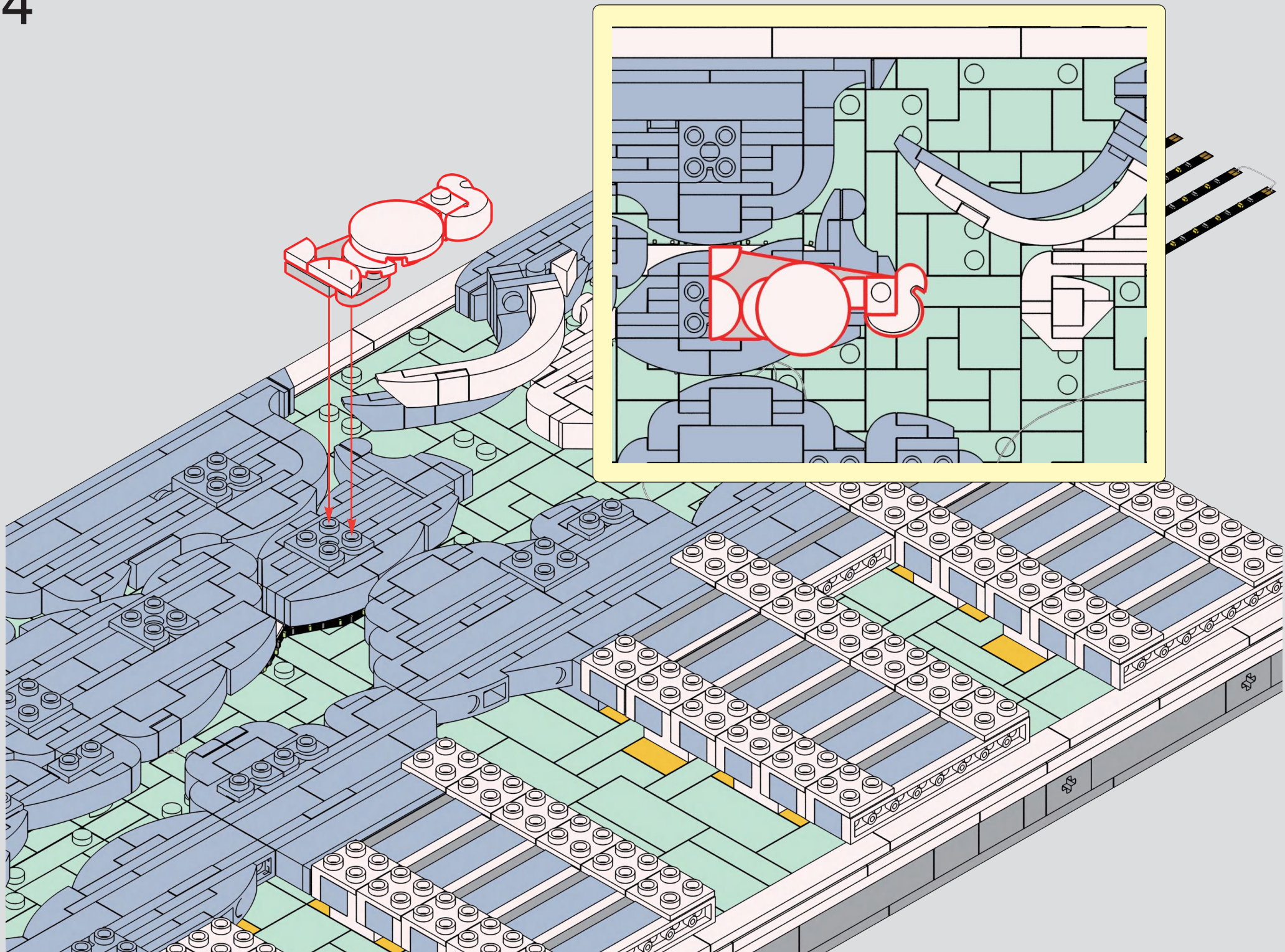

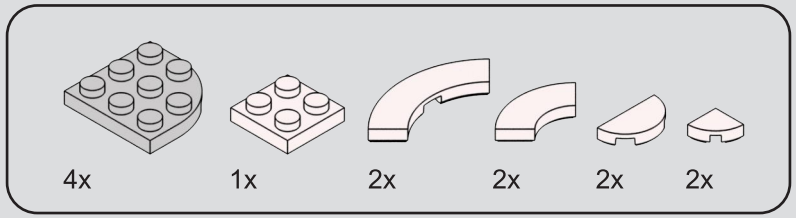

5

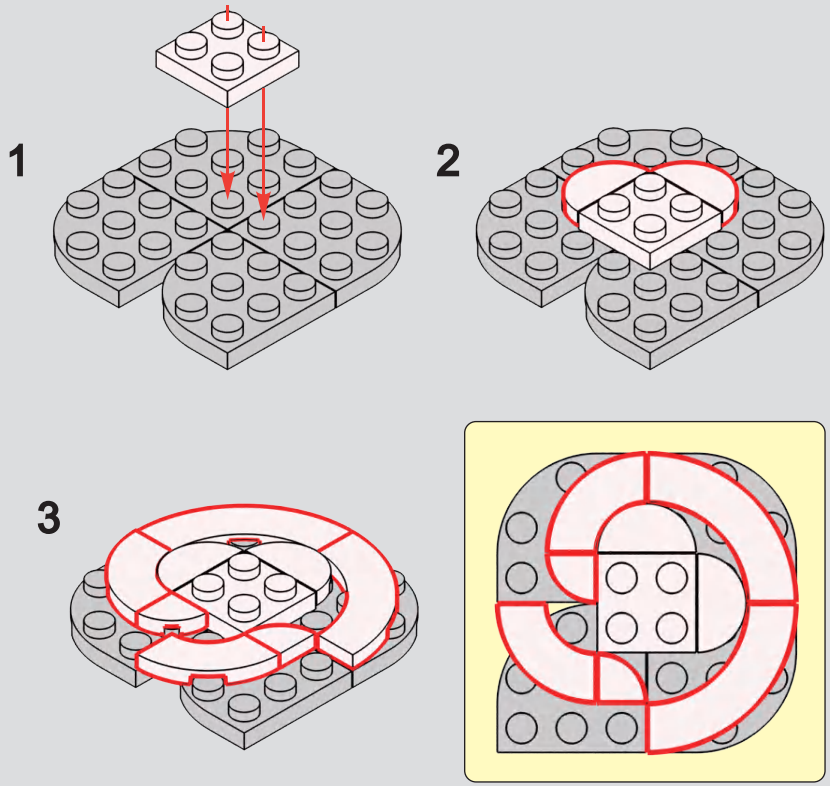

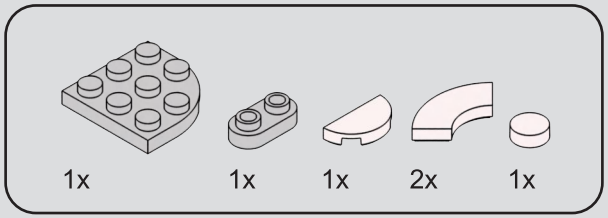

6

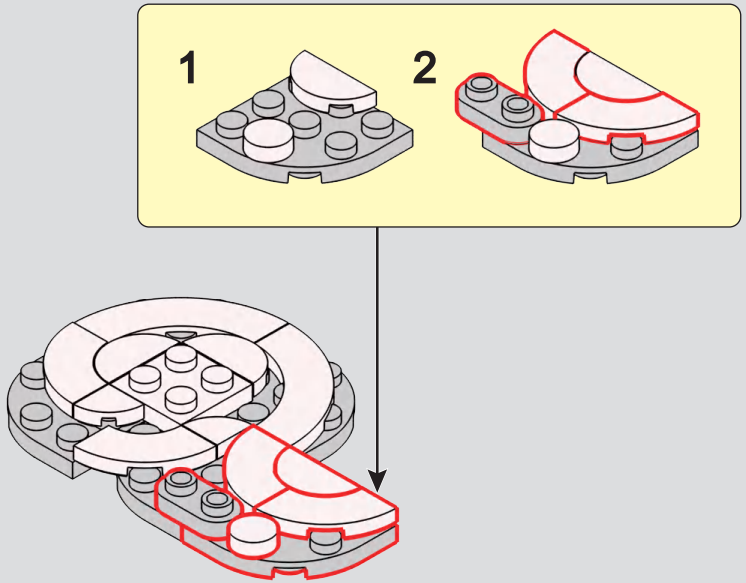

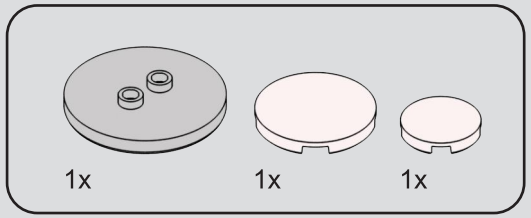

7

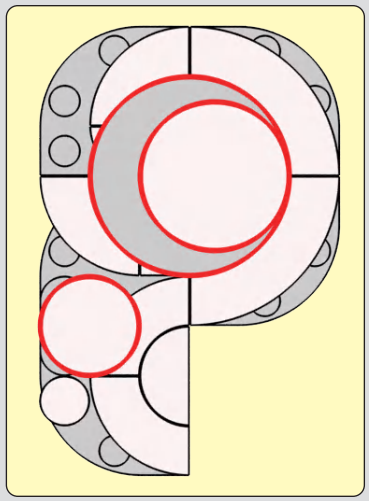

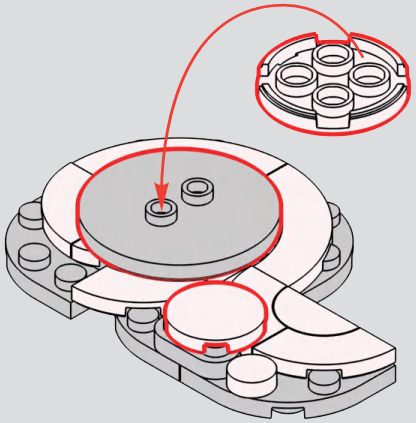

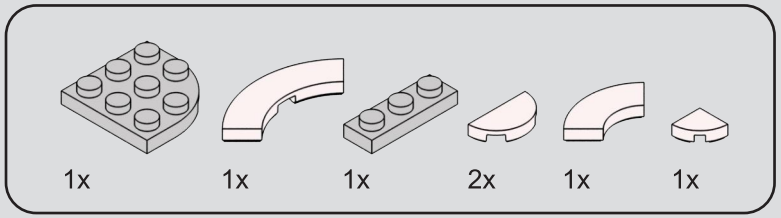

8

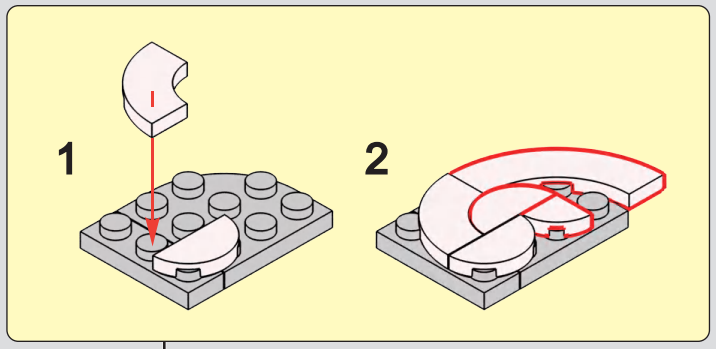

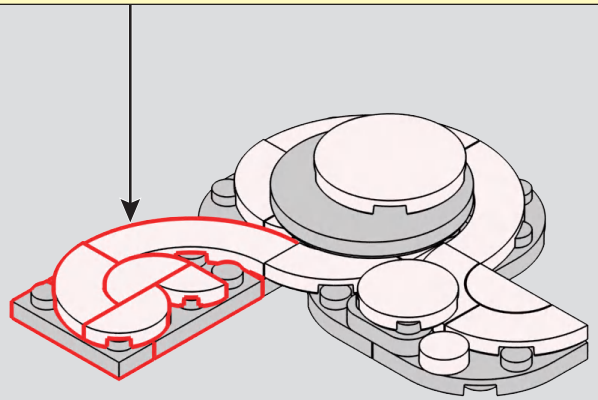

9

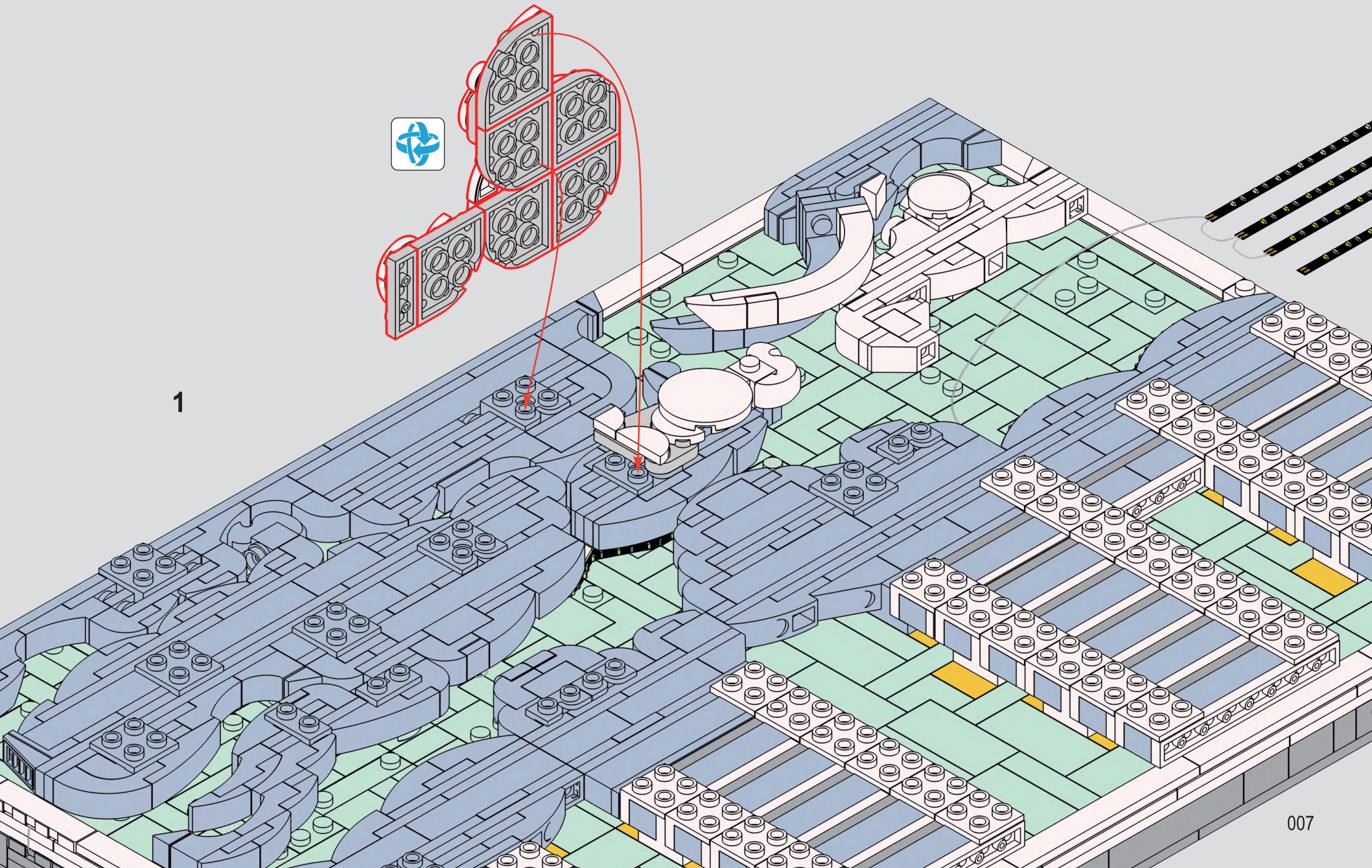

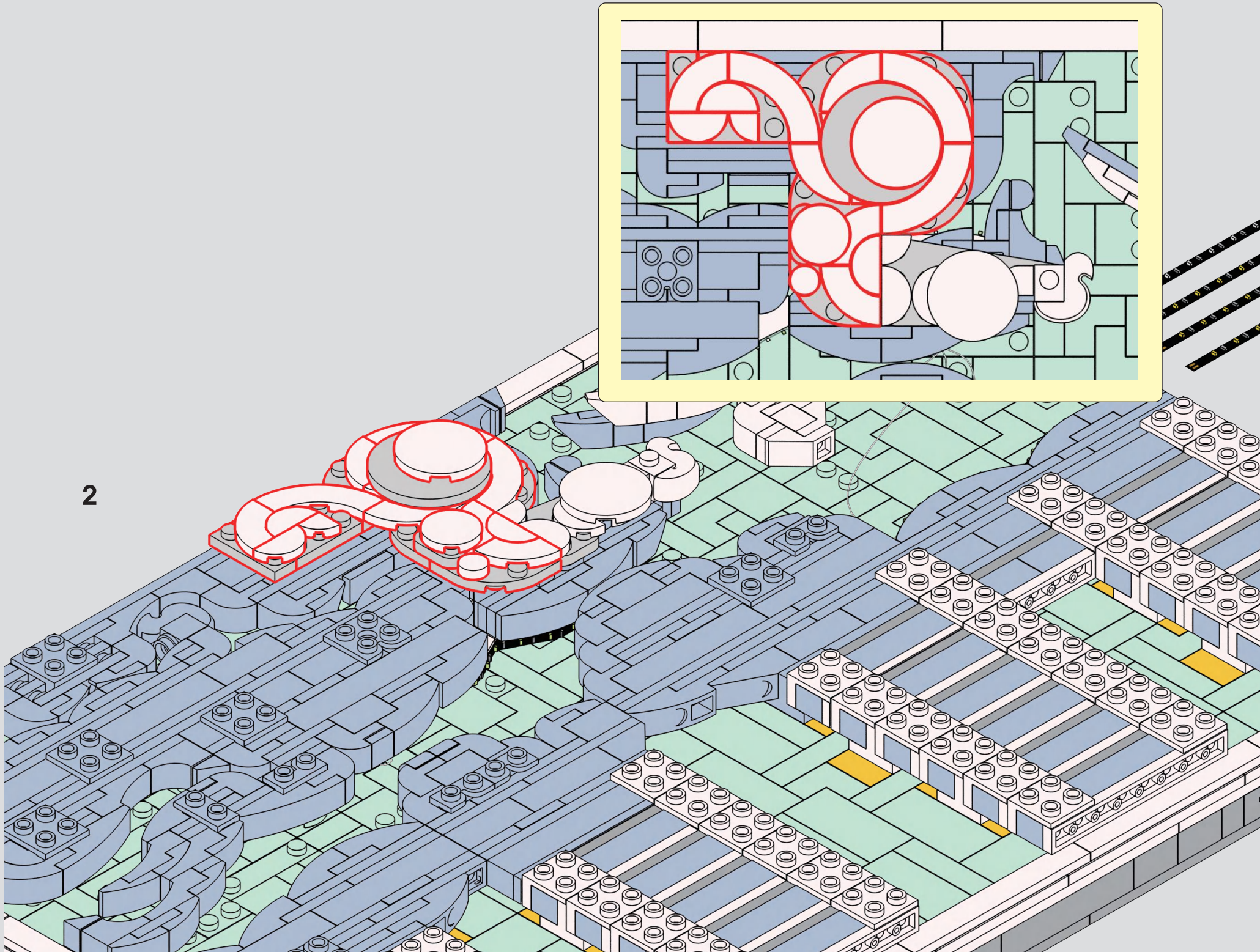
2

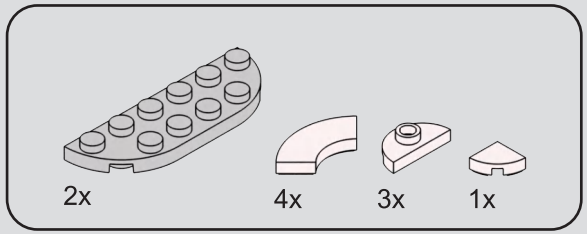

10

1

2

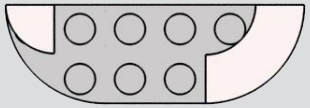

3

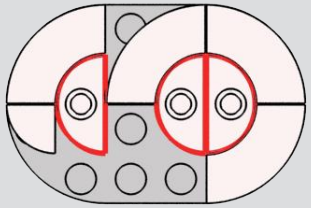

11

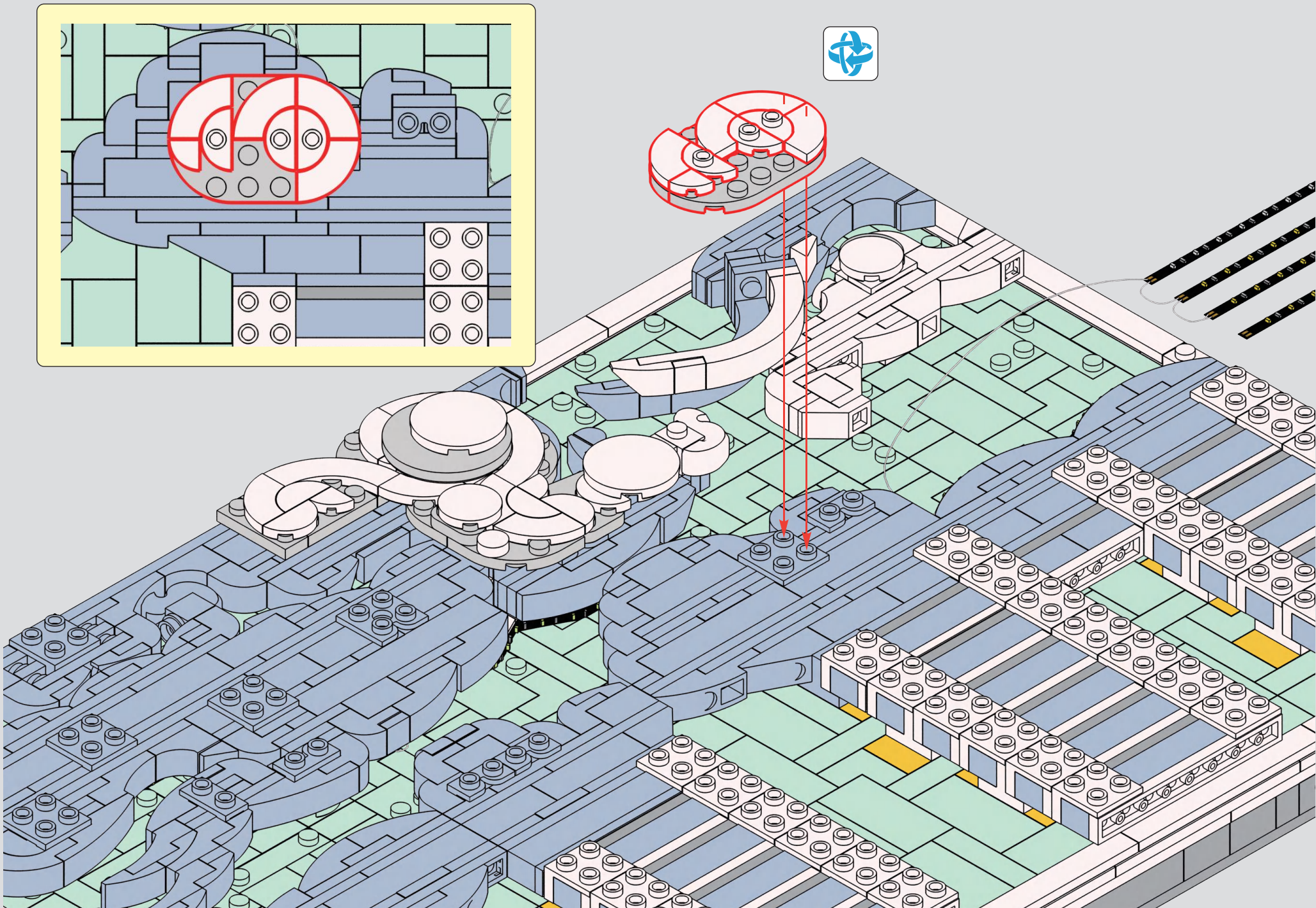

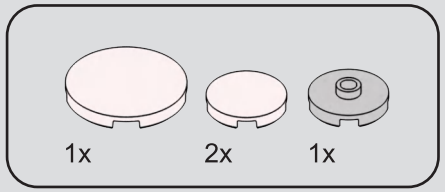

12

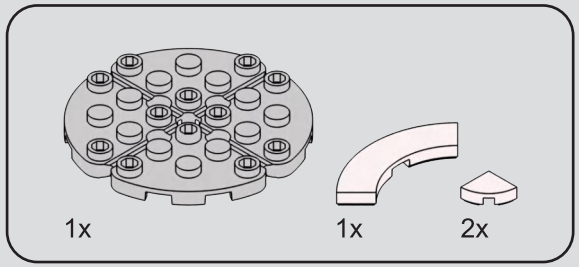

13

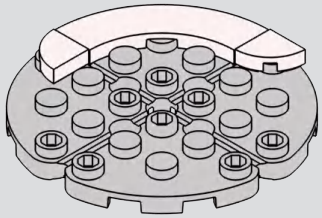

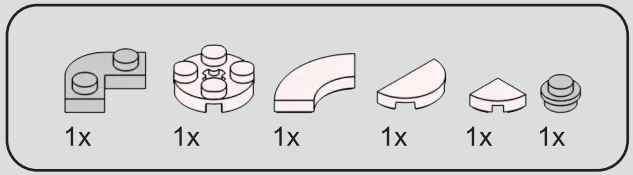

14

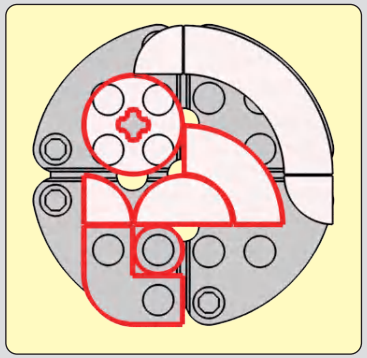

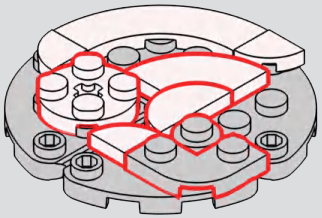

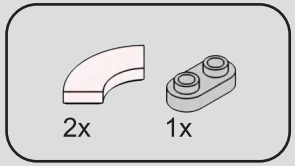

15

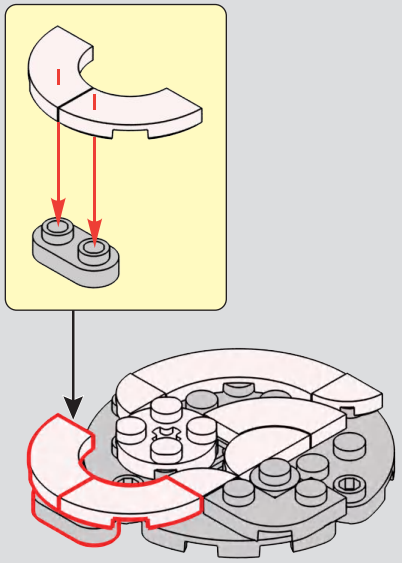

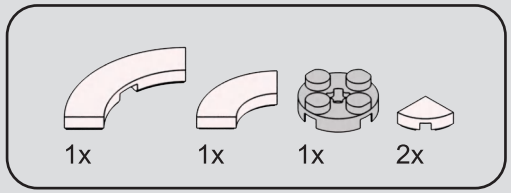

16

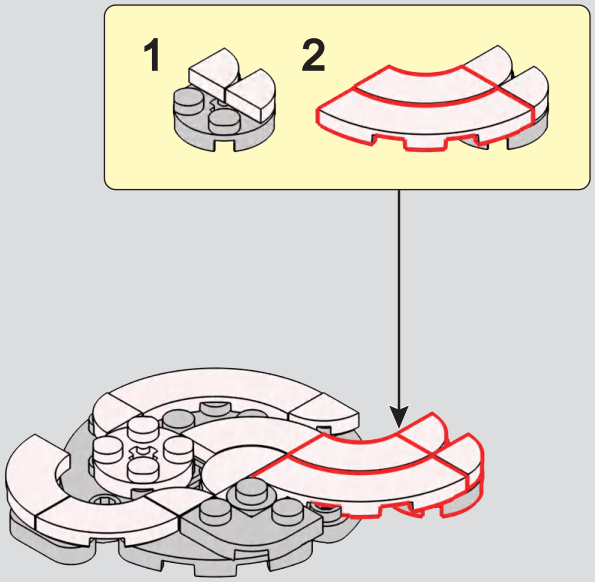

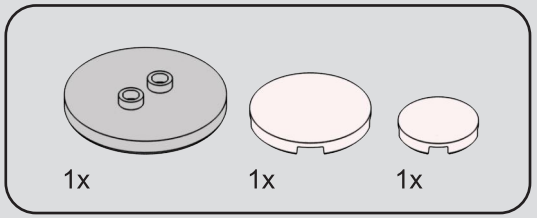

17

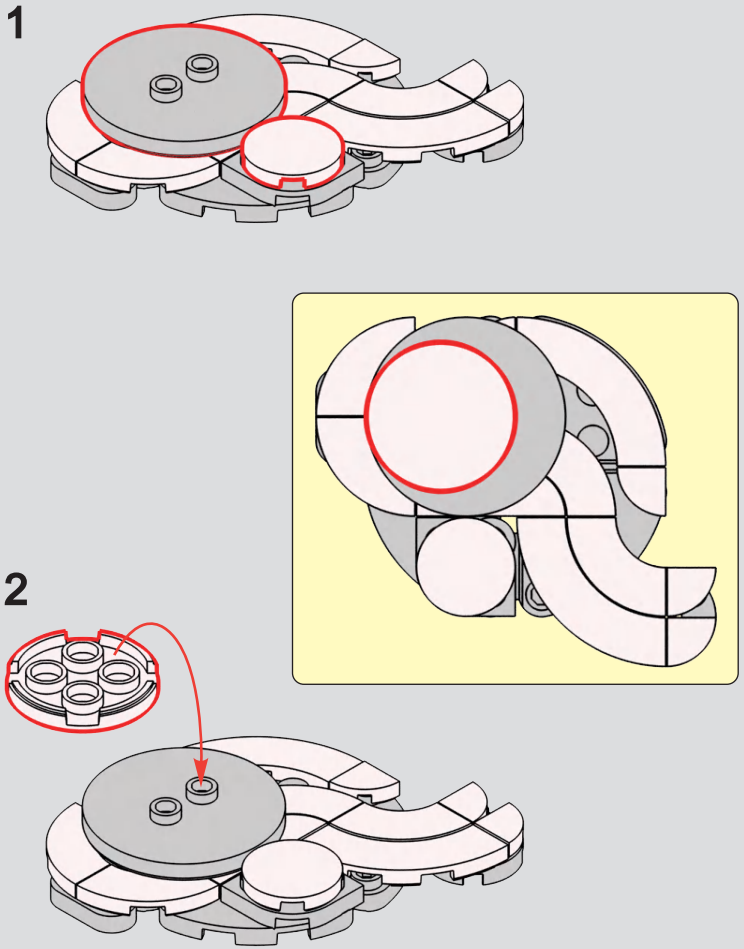

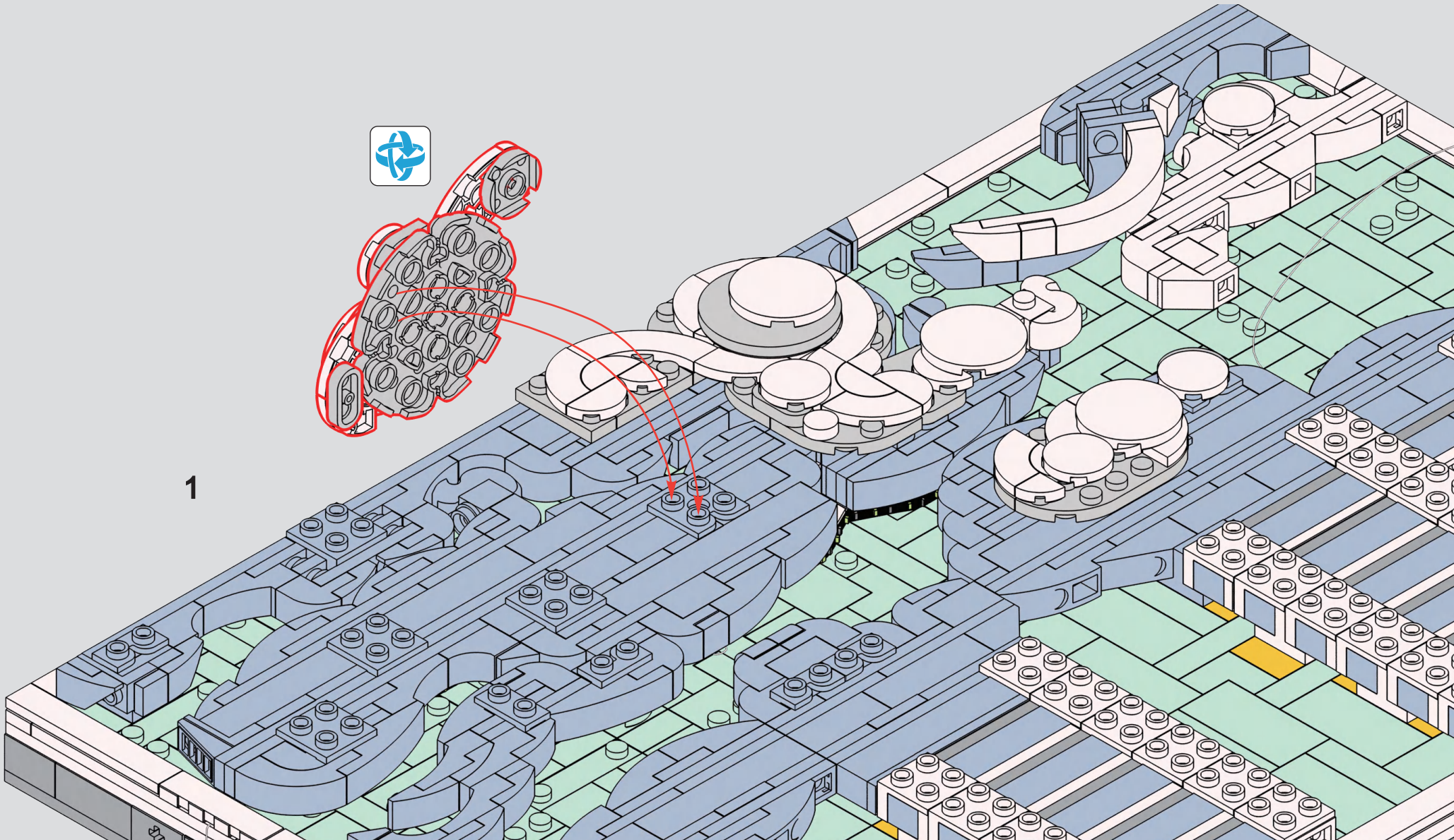
1

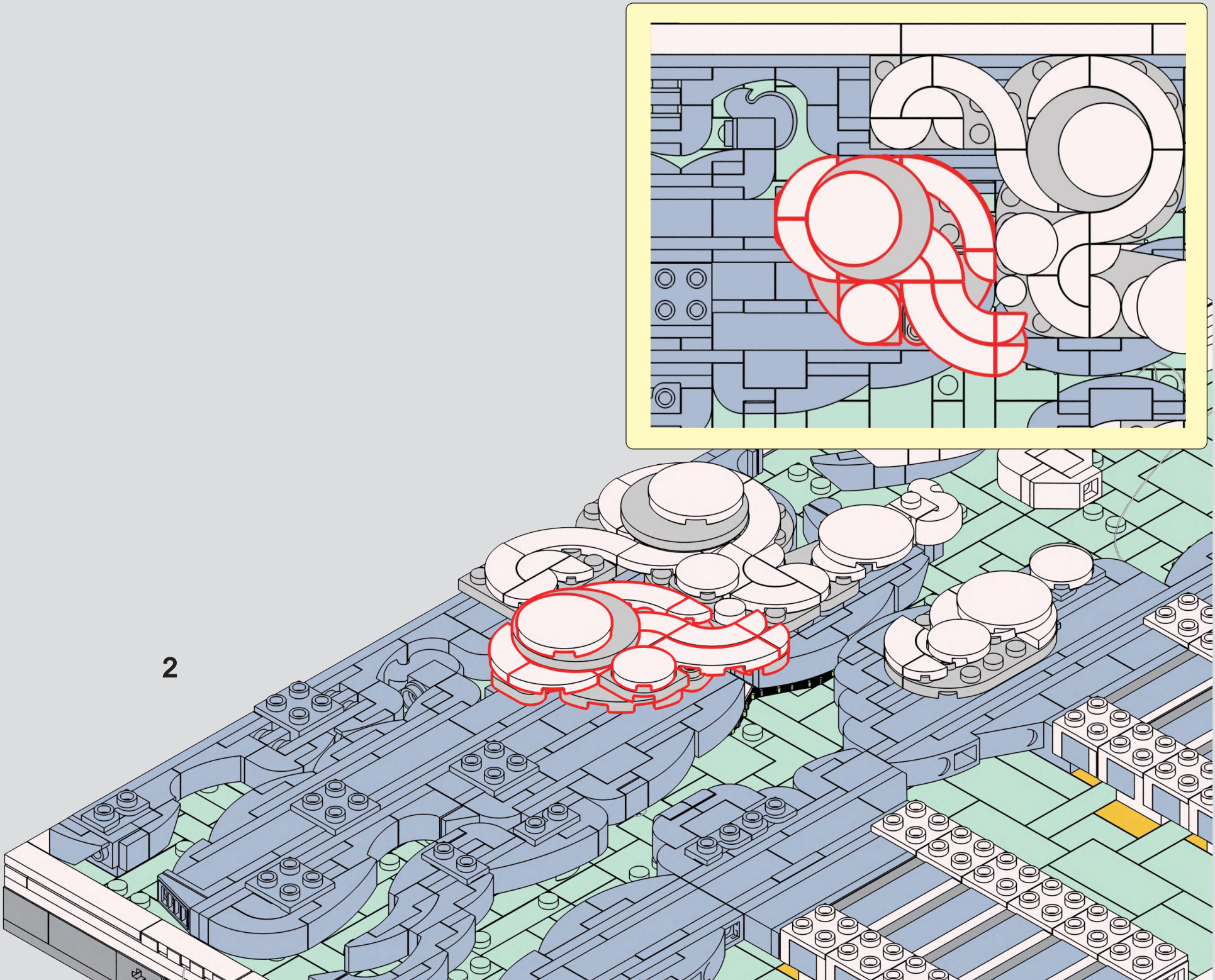
2

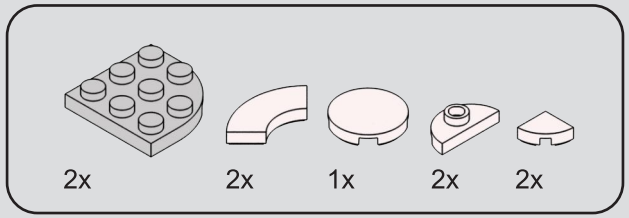

19

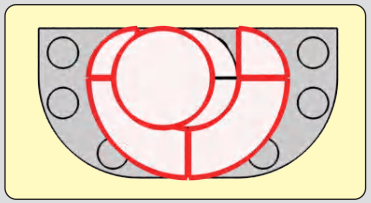

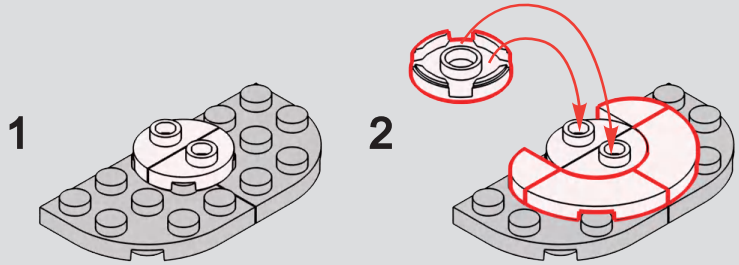

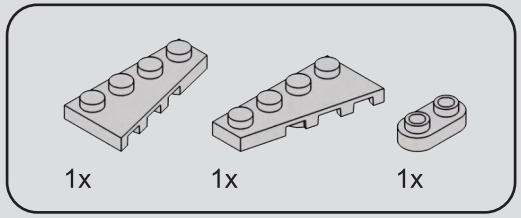

20

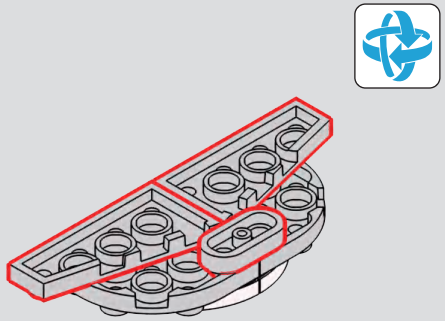

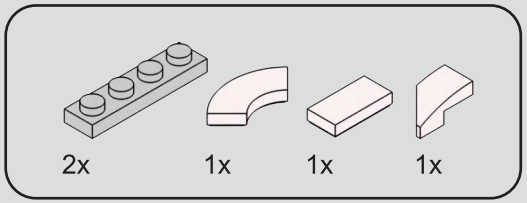

21

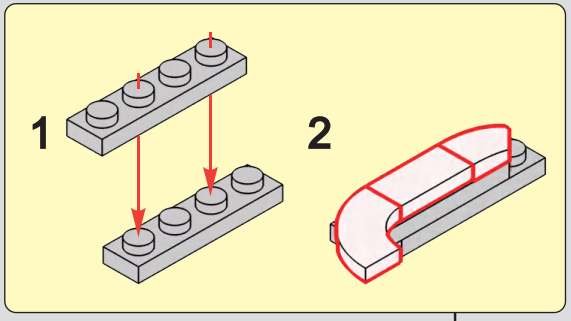

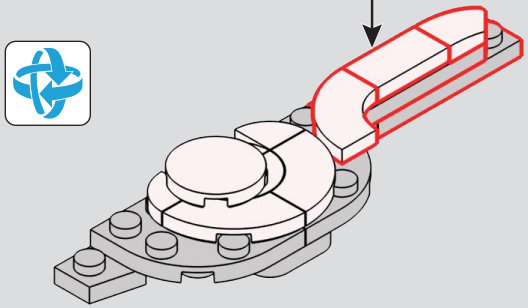

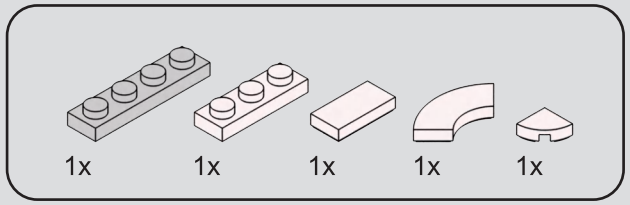

22

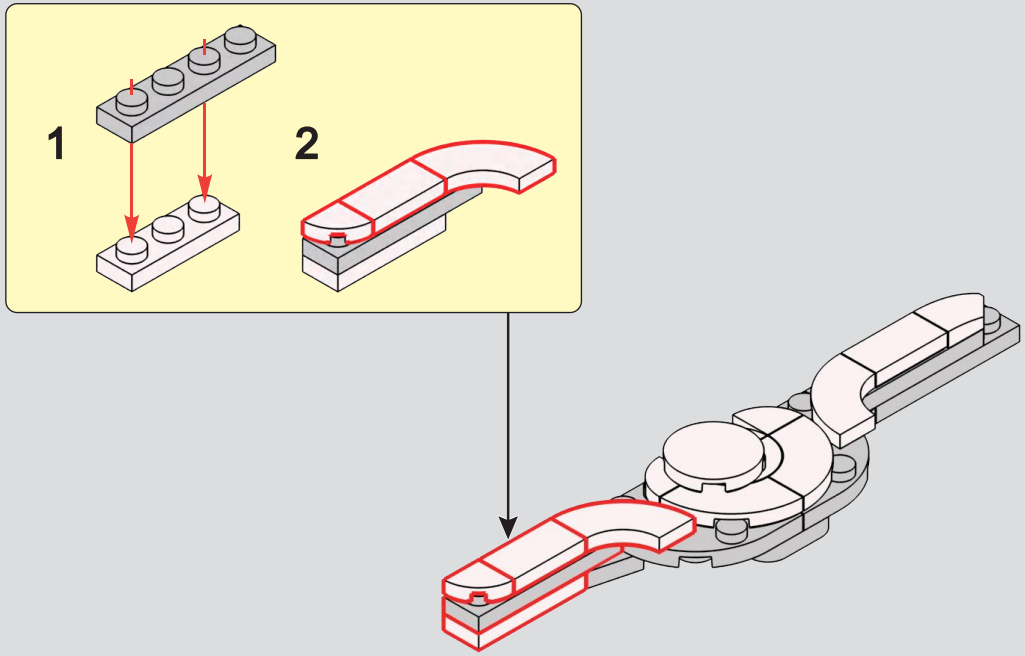

23

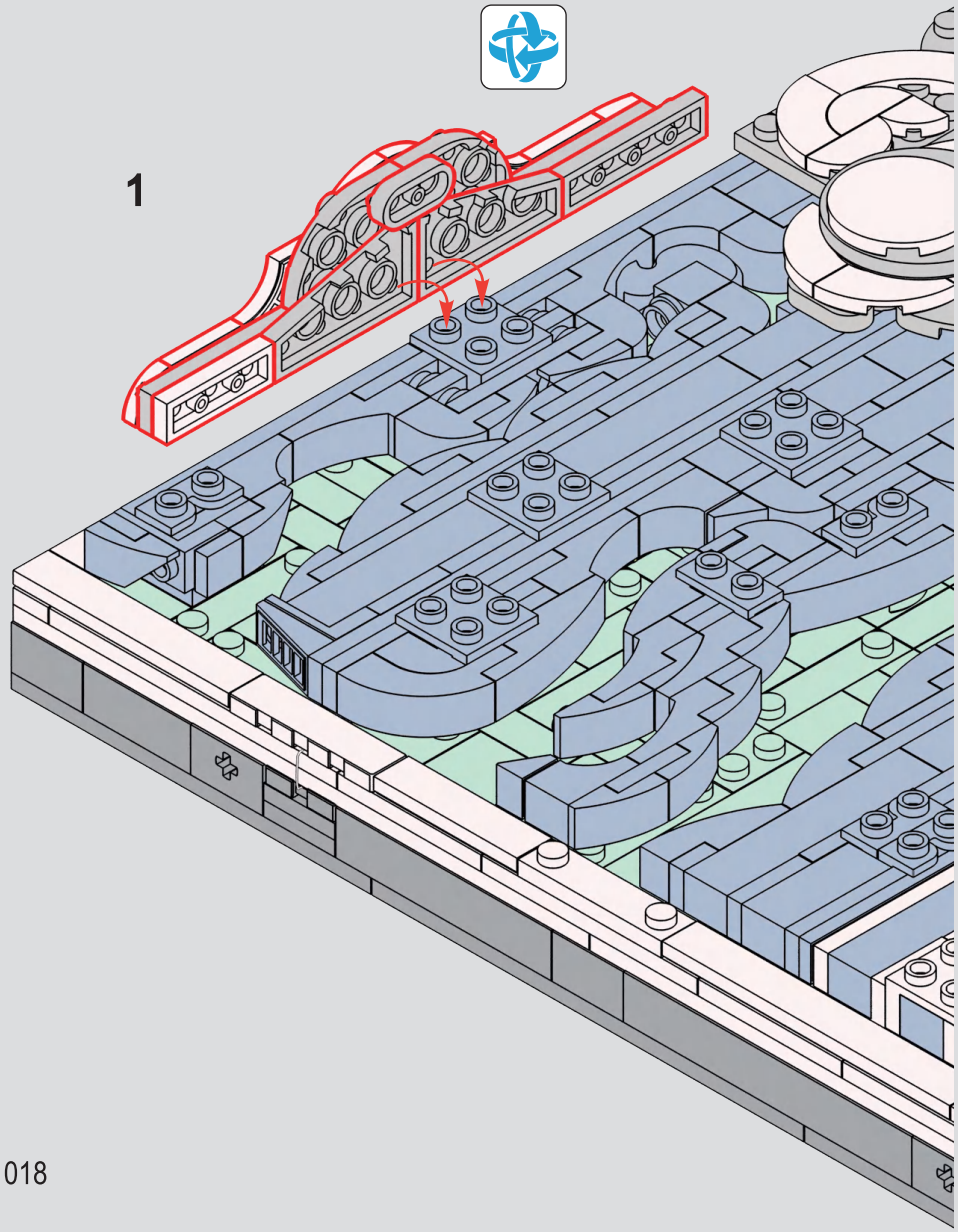

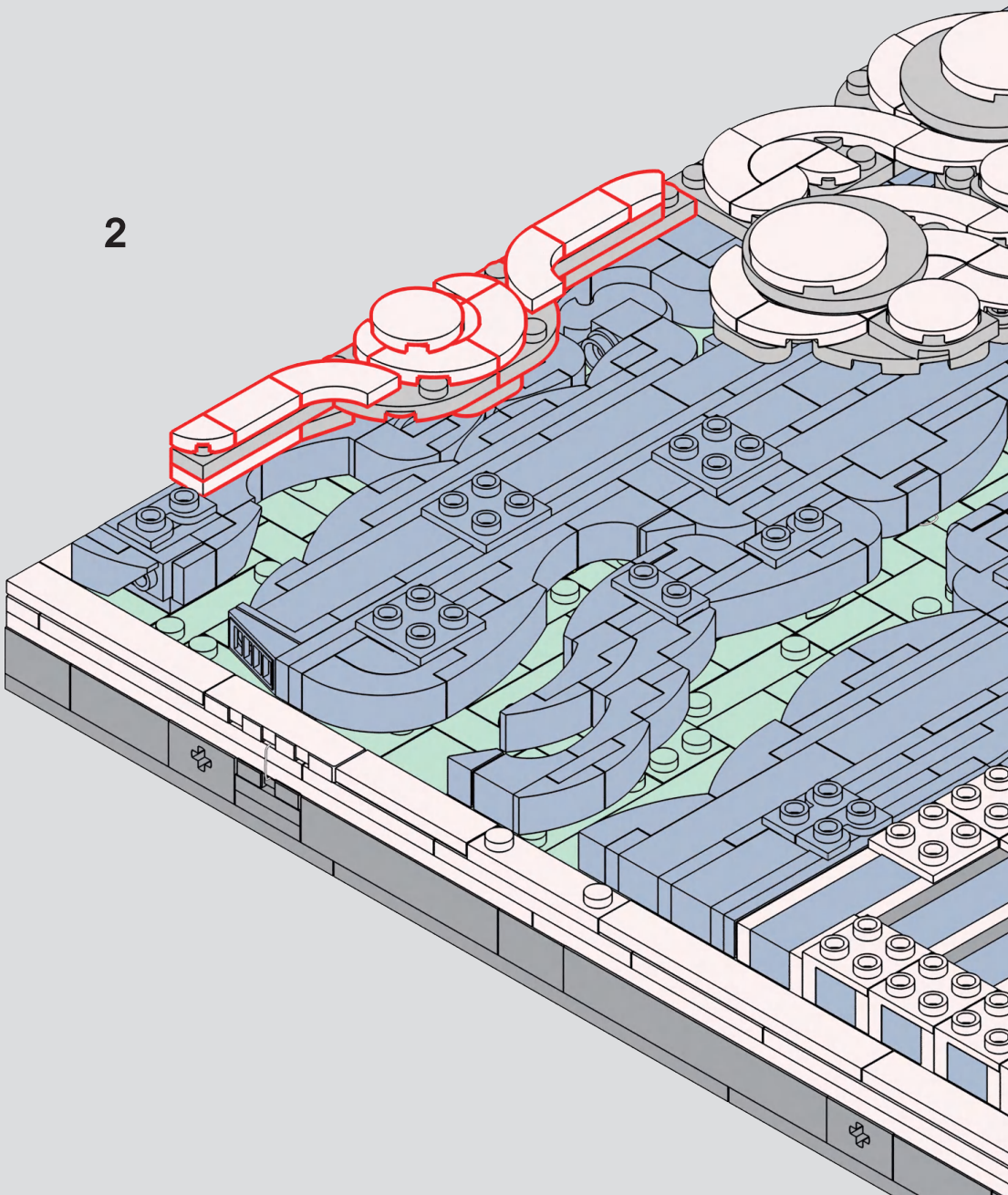

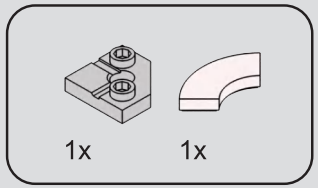

24

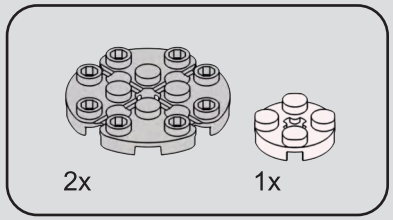

25

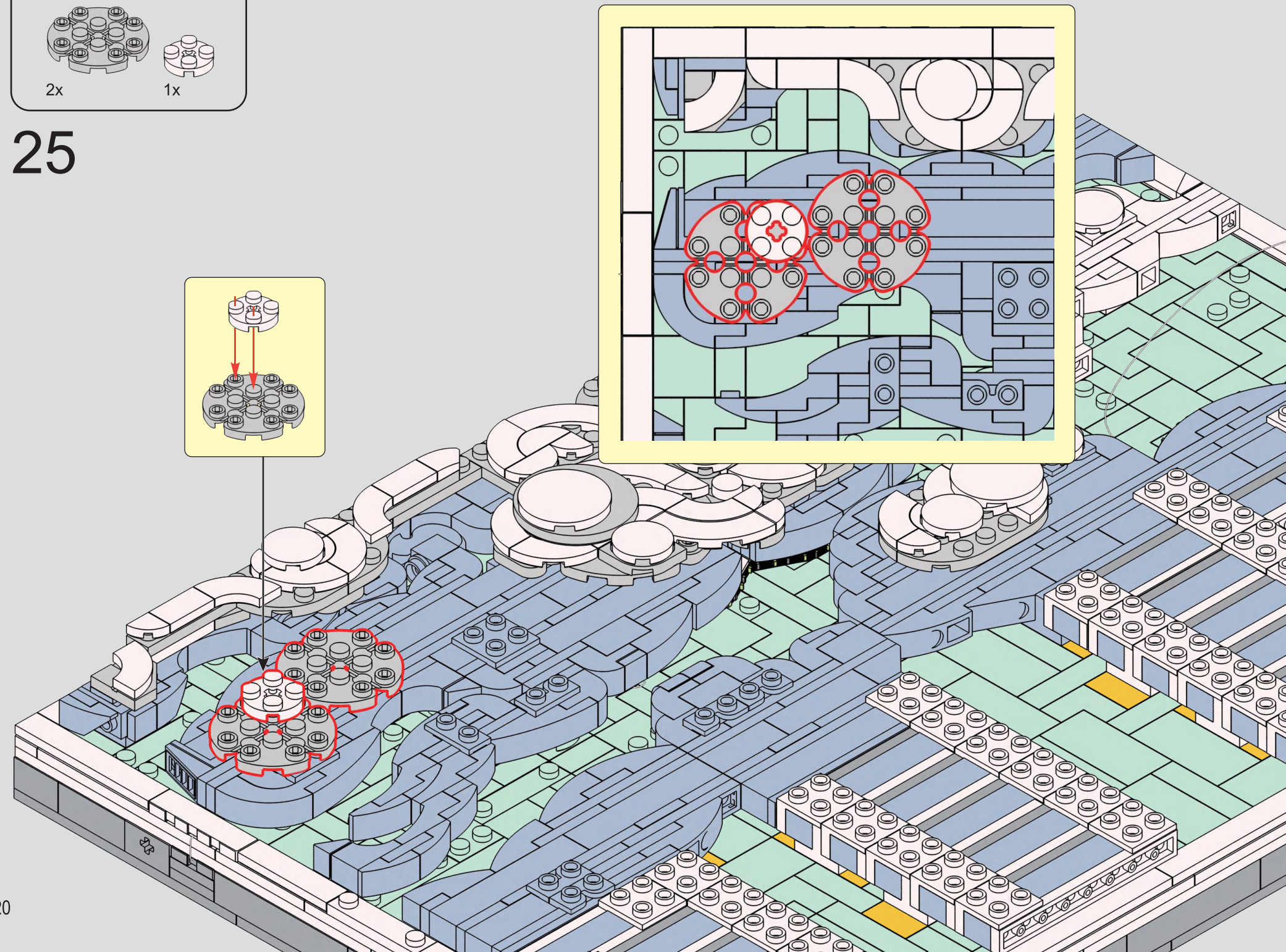

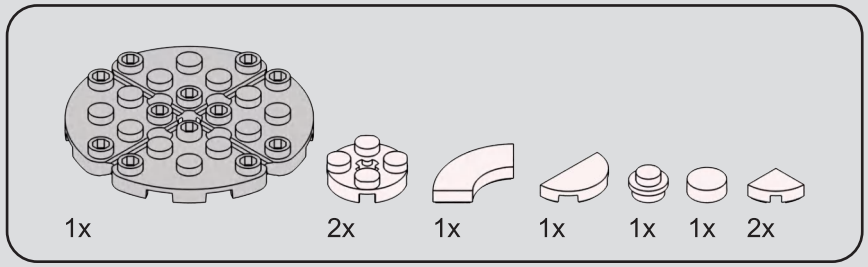

26

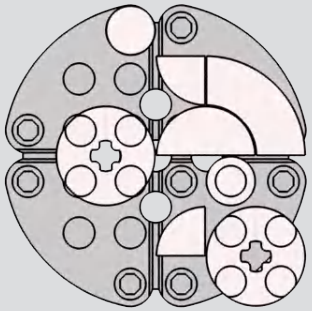

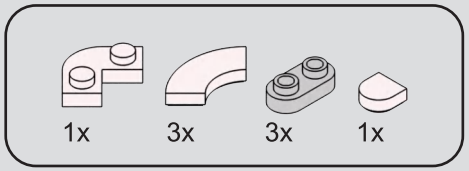

27

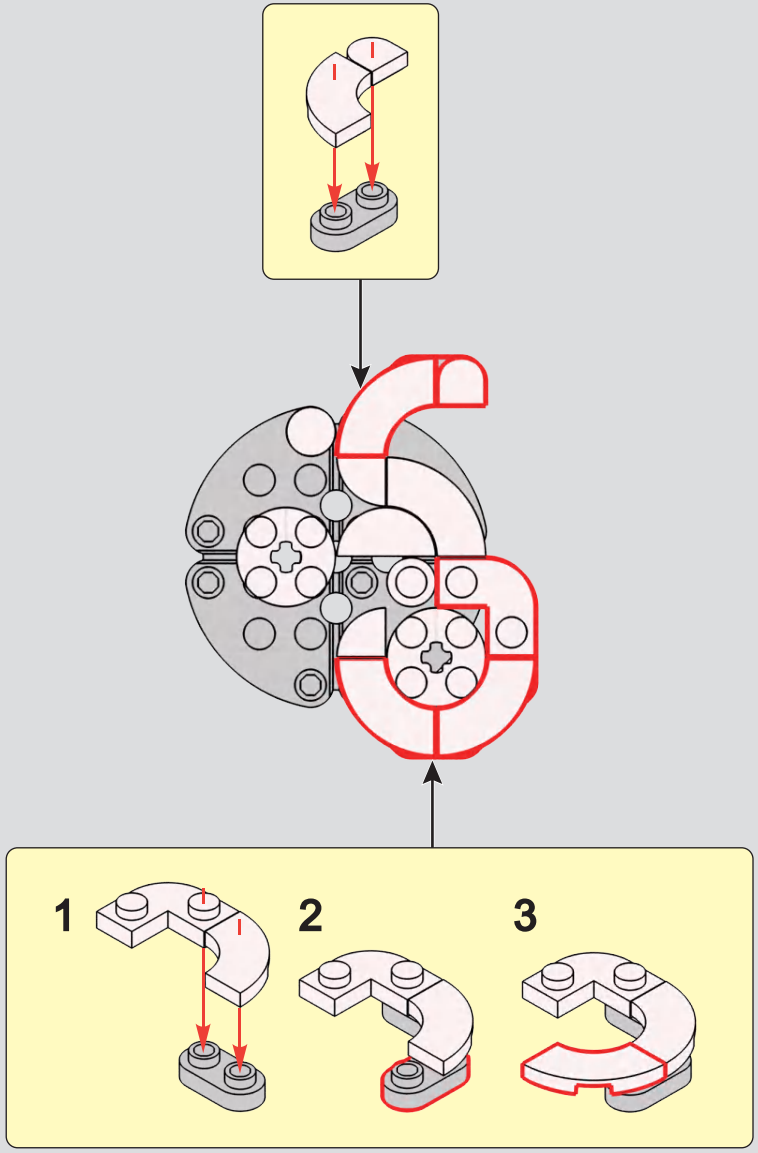

28

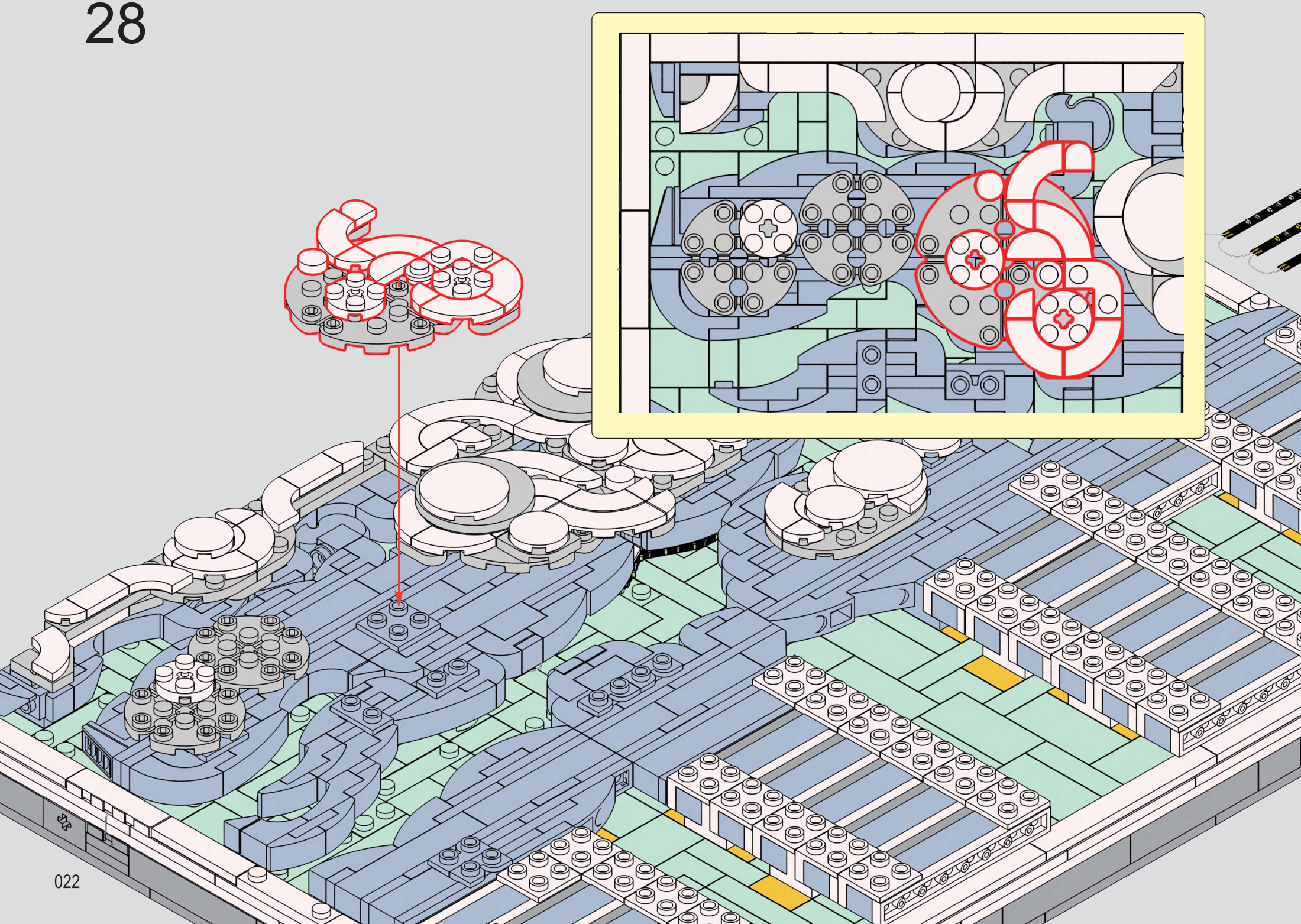

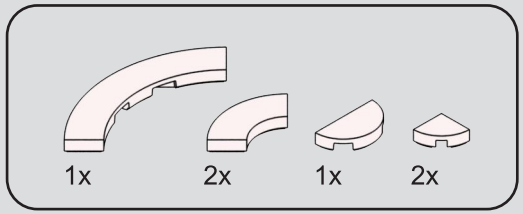

29

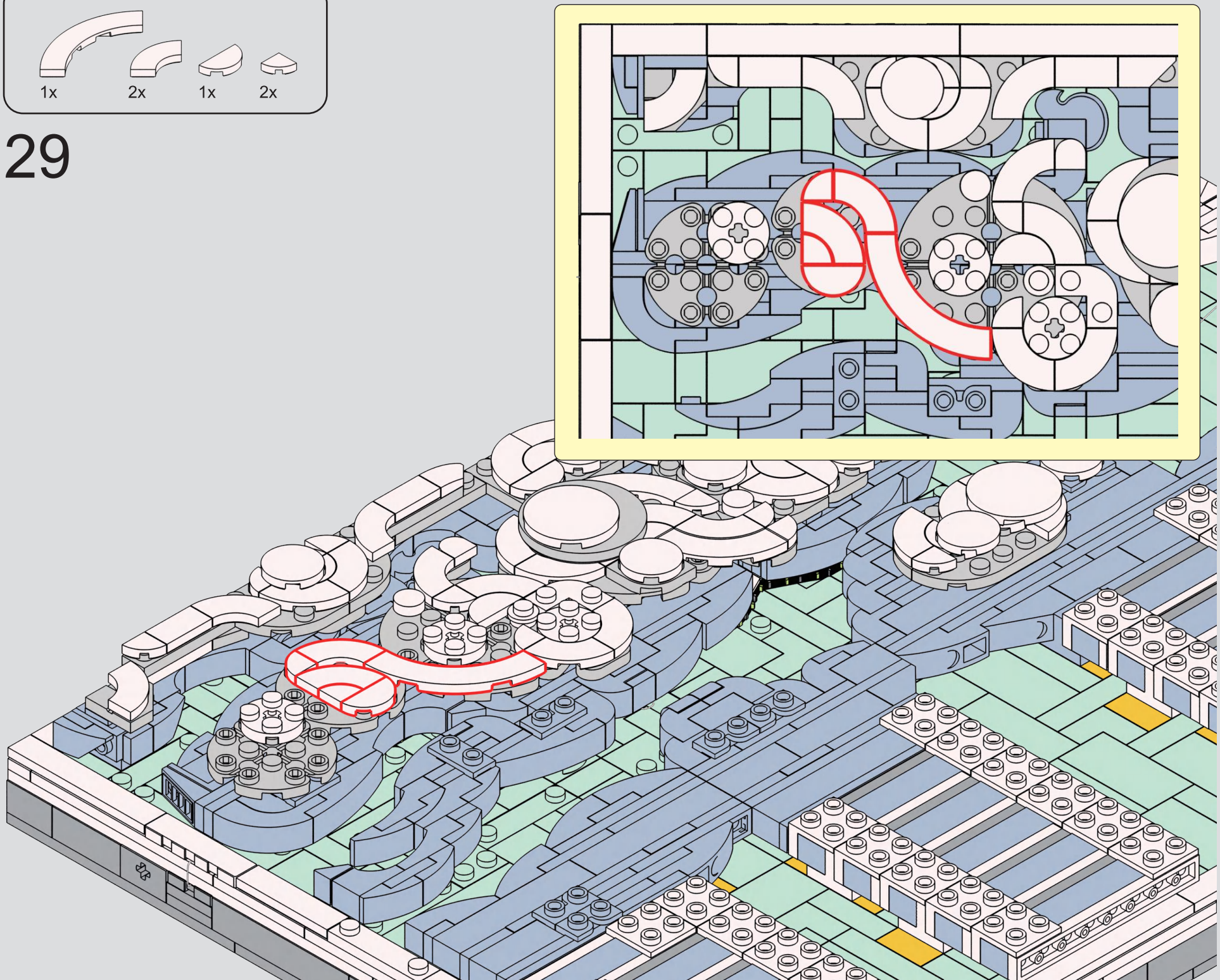

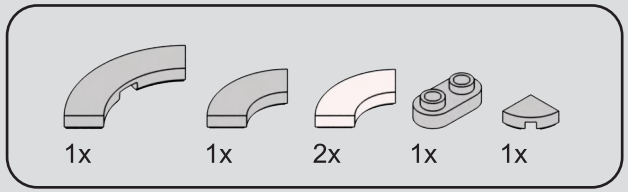

30

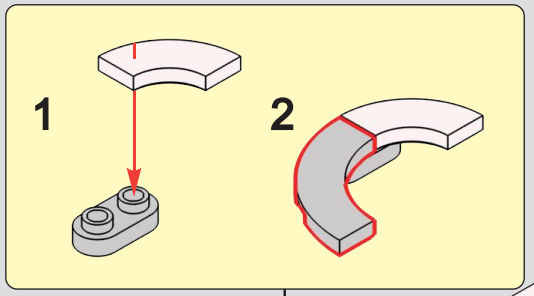

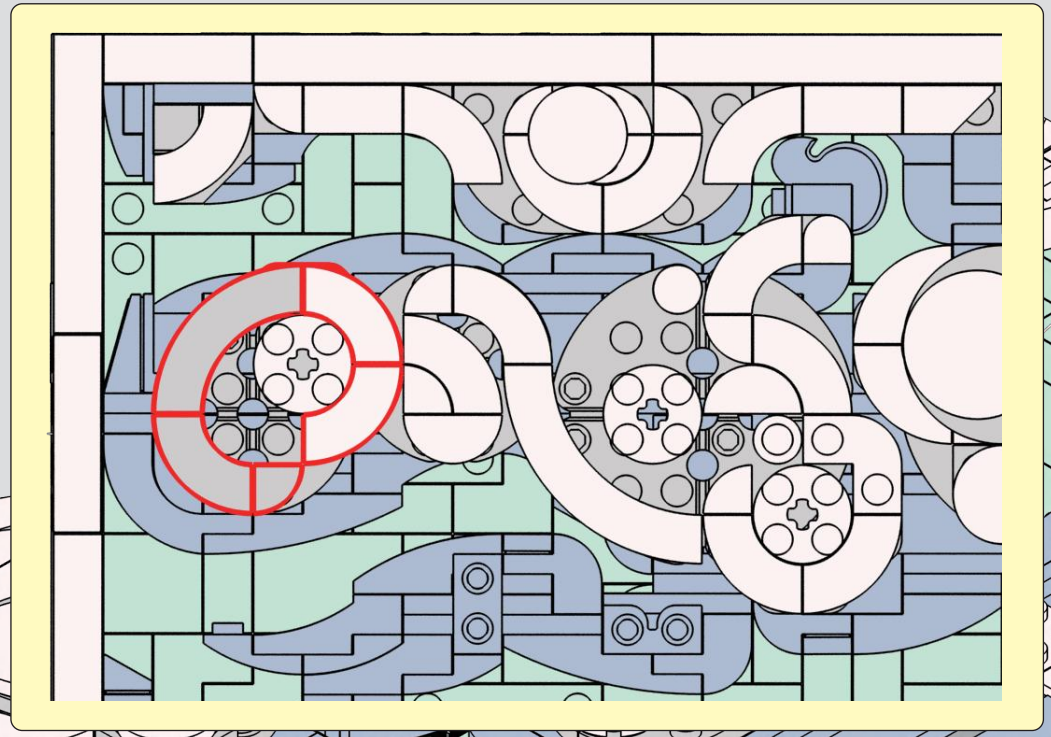

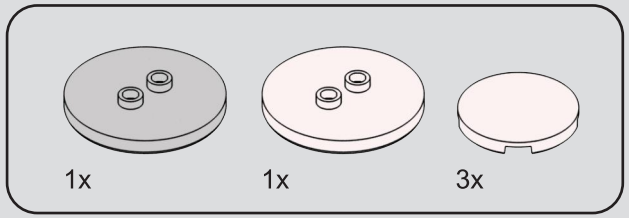

31

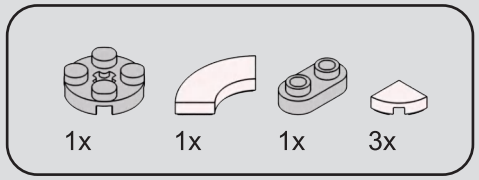

32

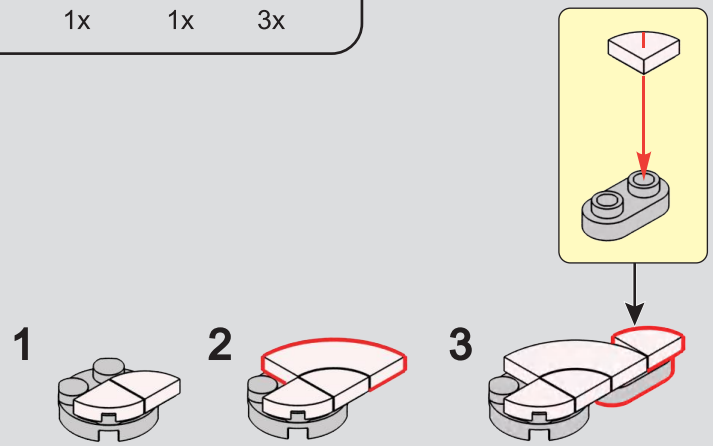

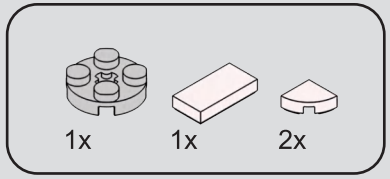

33

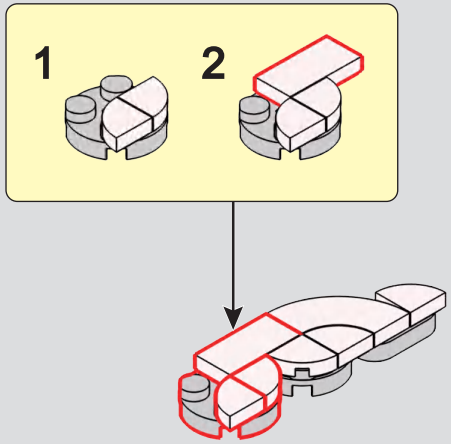

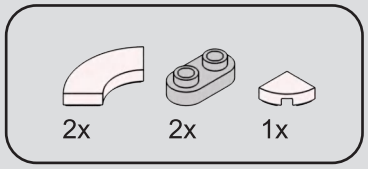

34

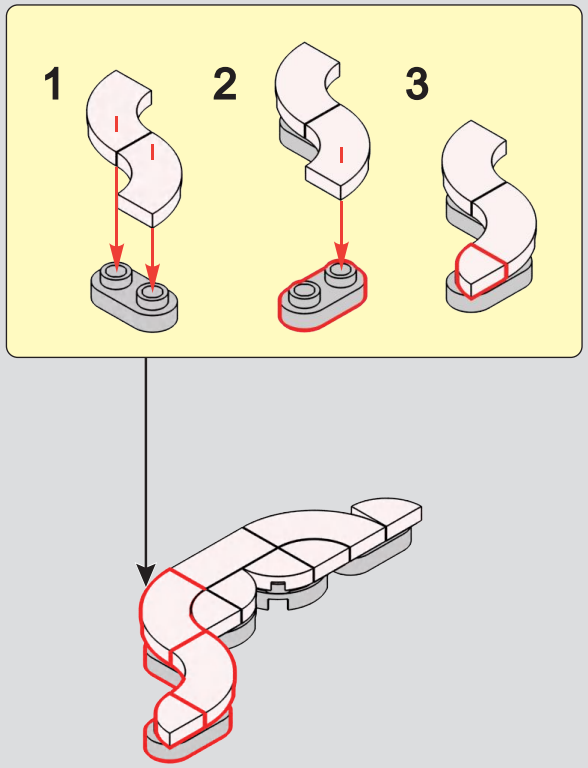

35

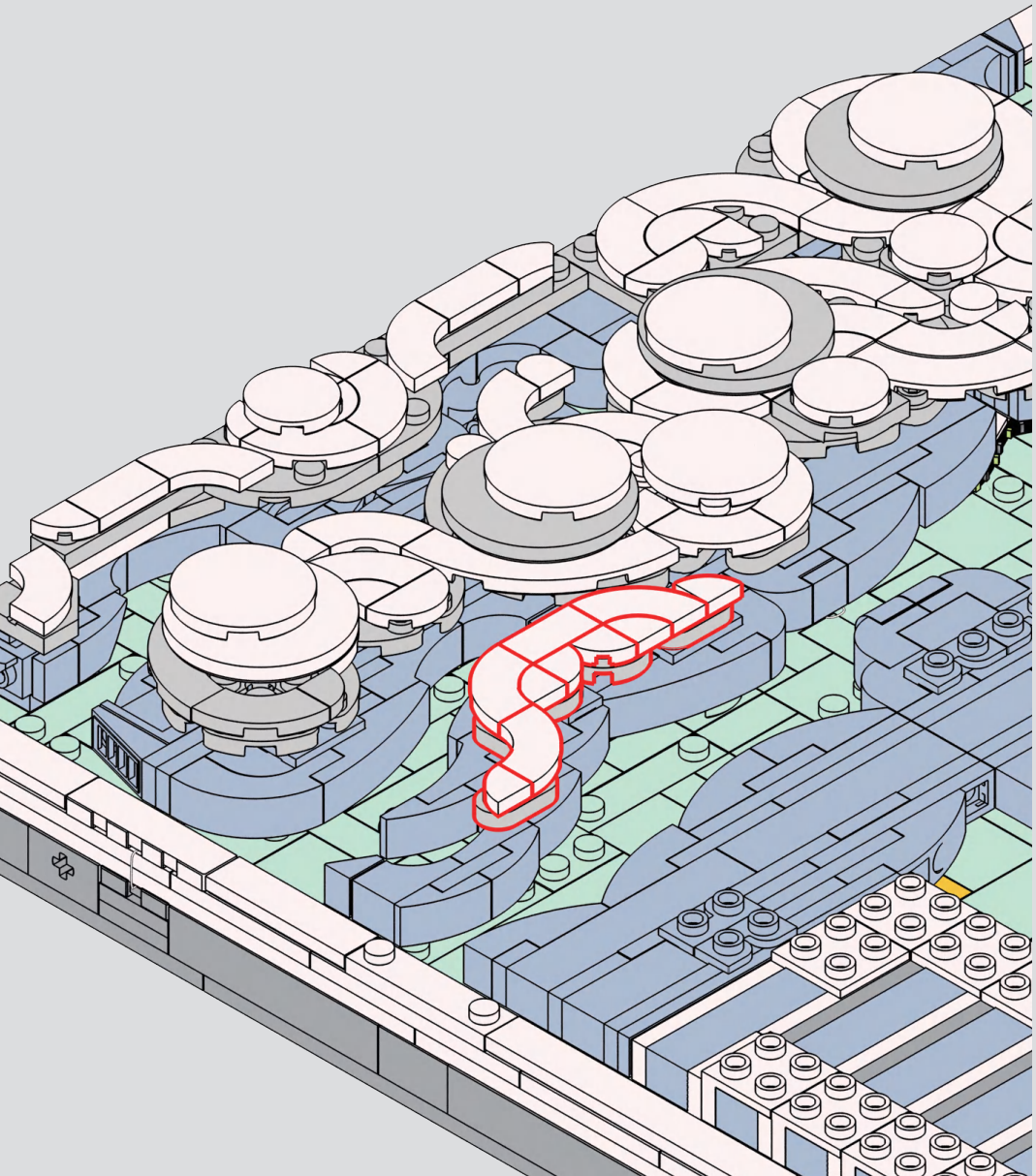

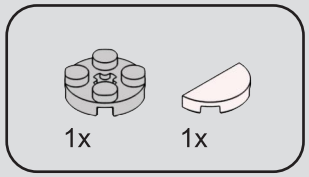

36

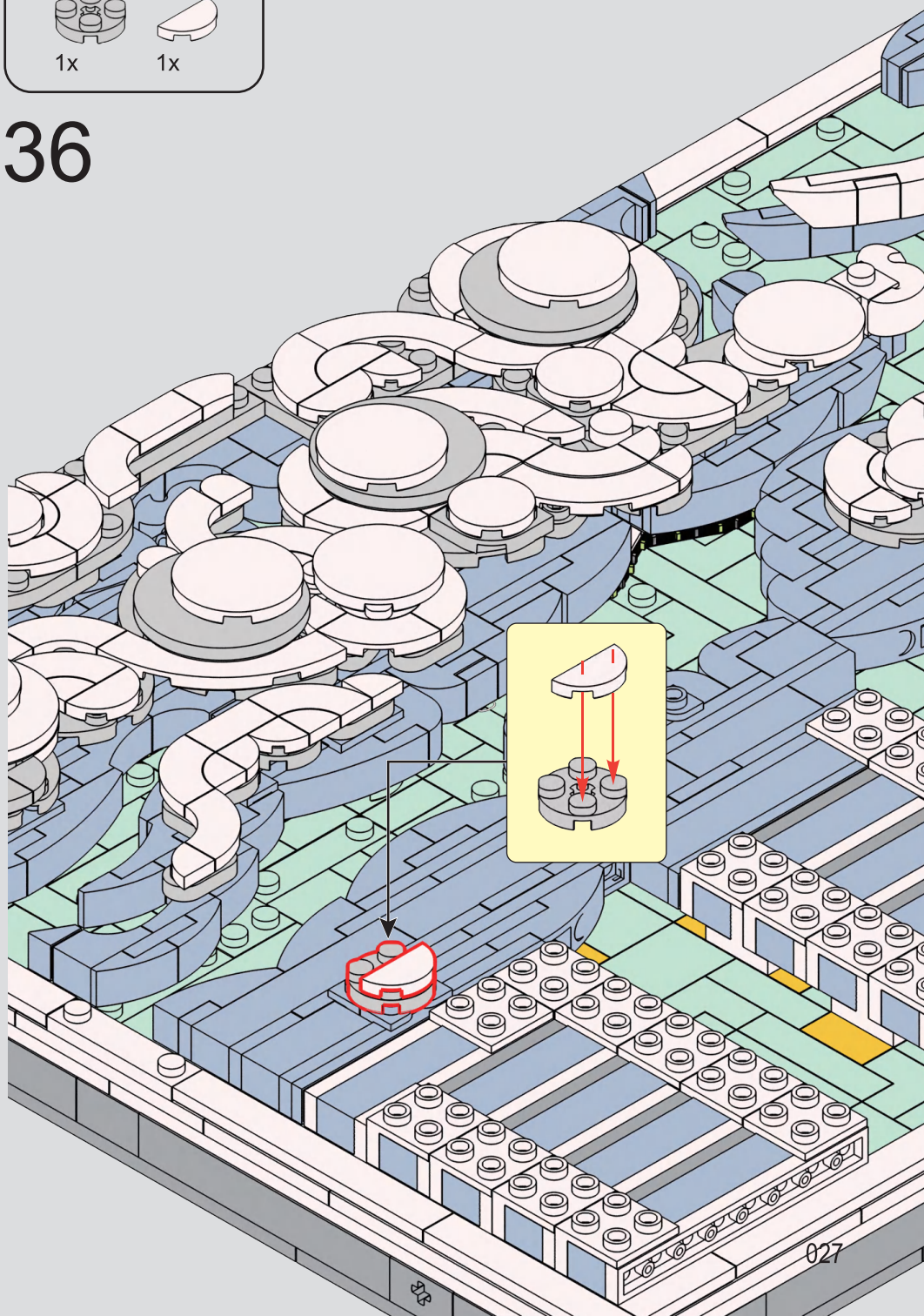

37

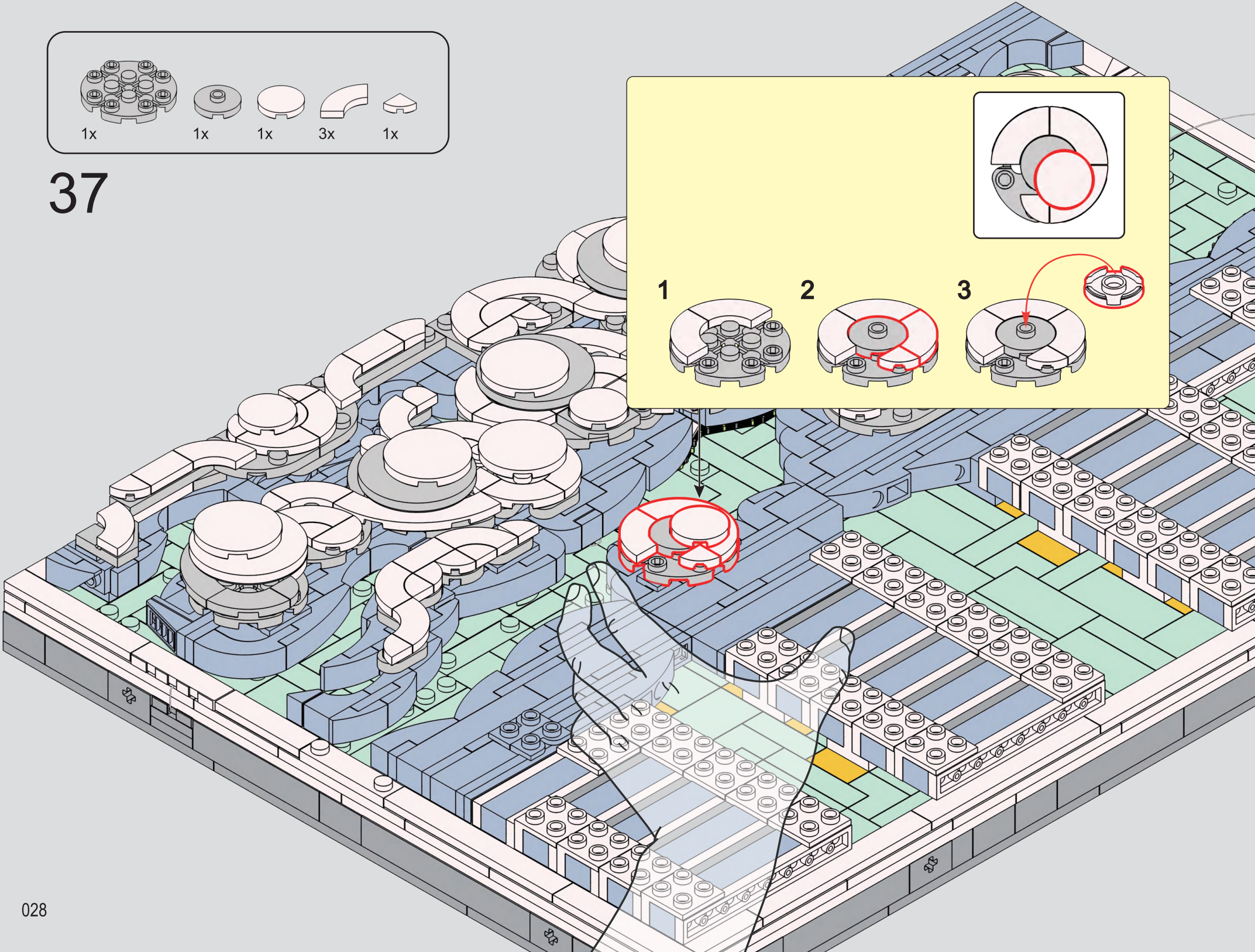

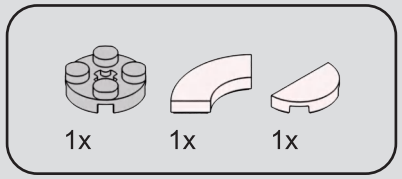

38

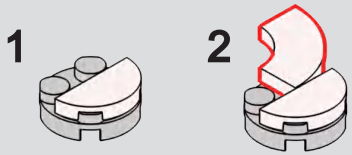

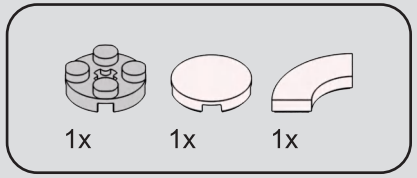

39

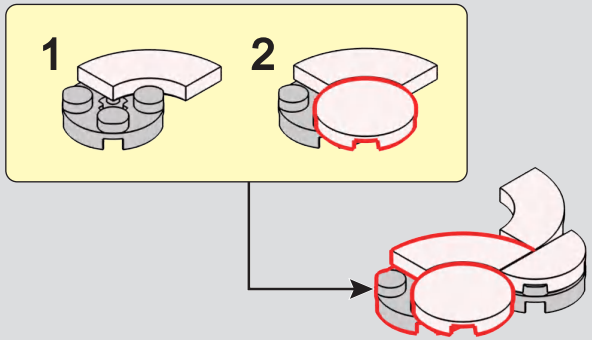

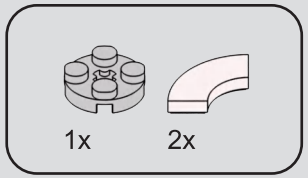

40

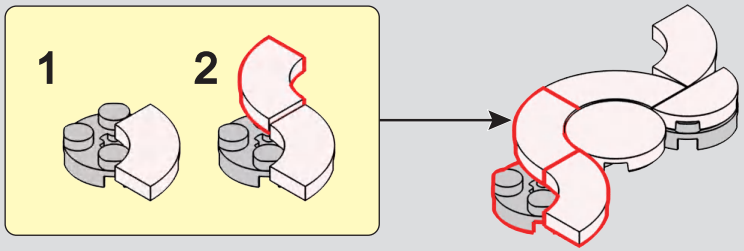

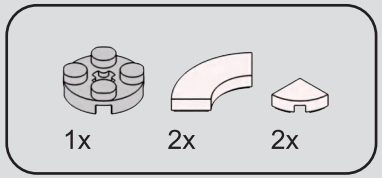

41

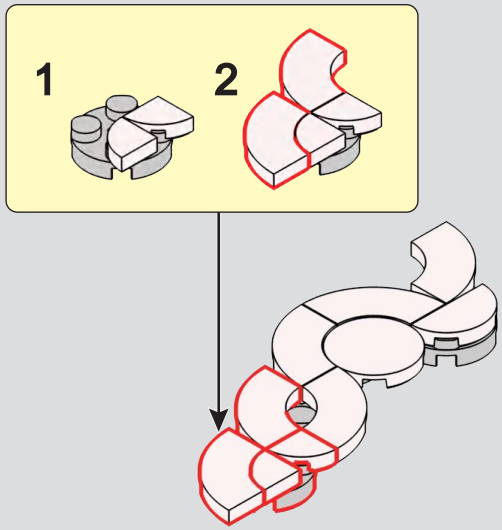

42

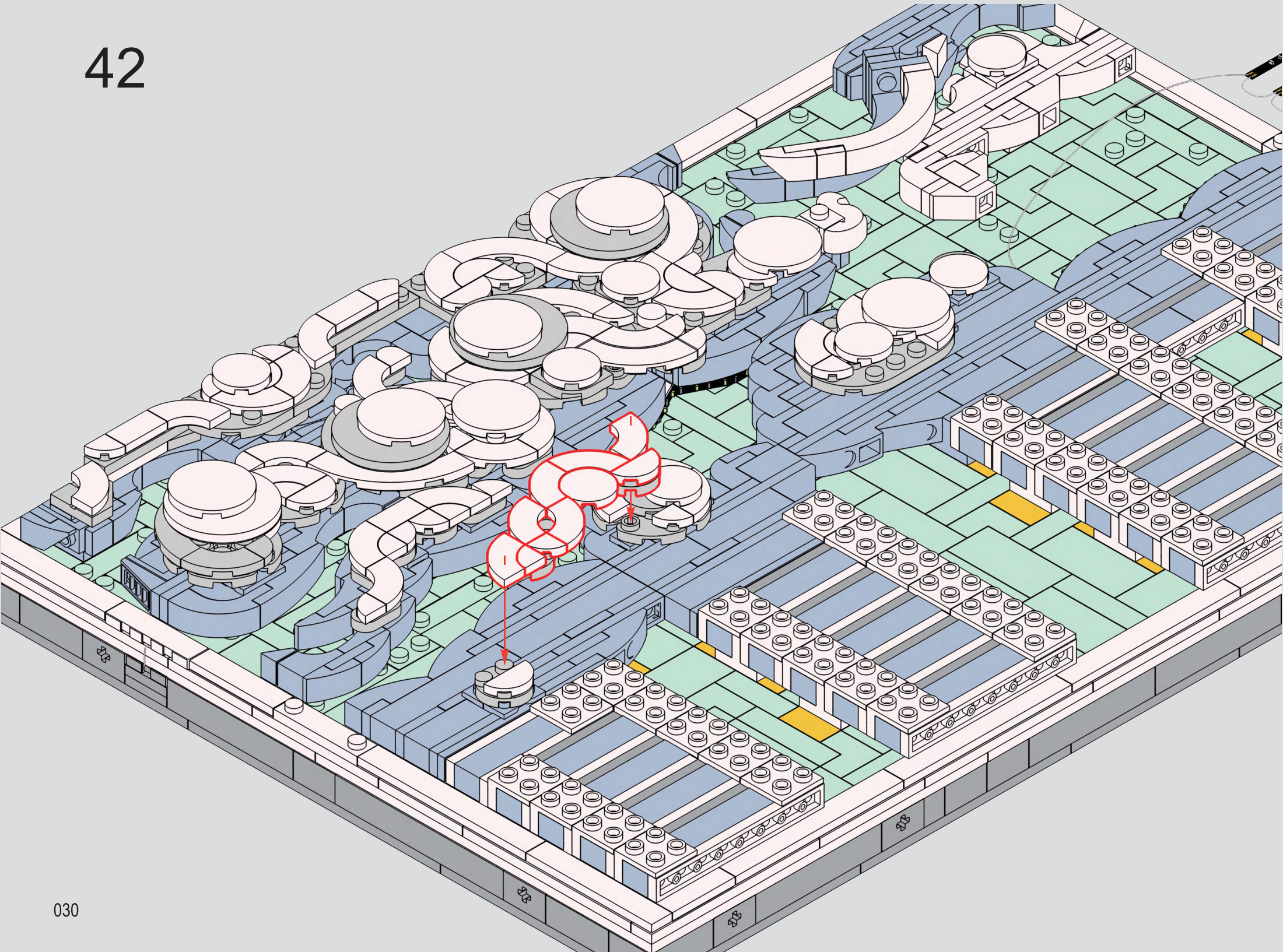

43

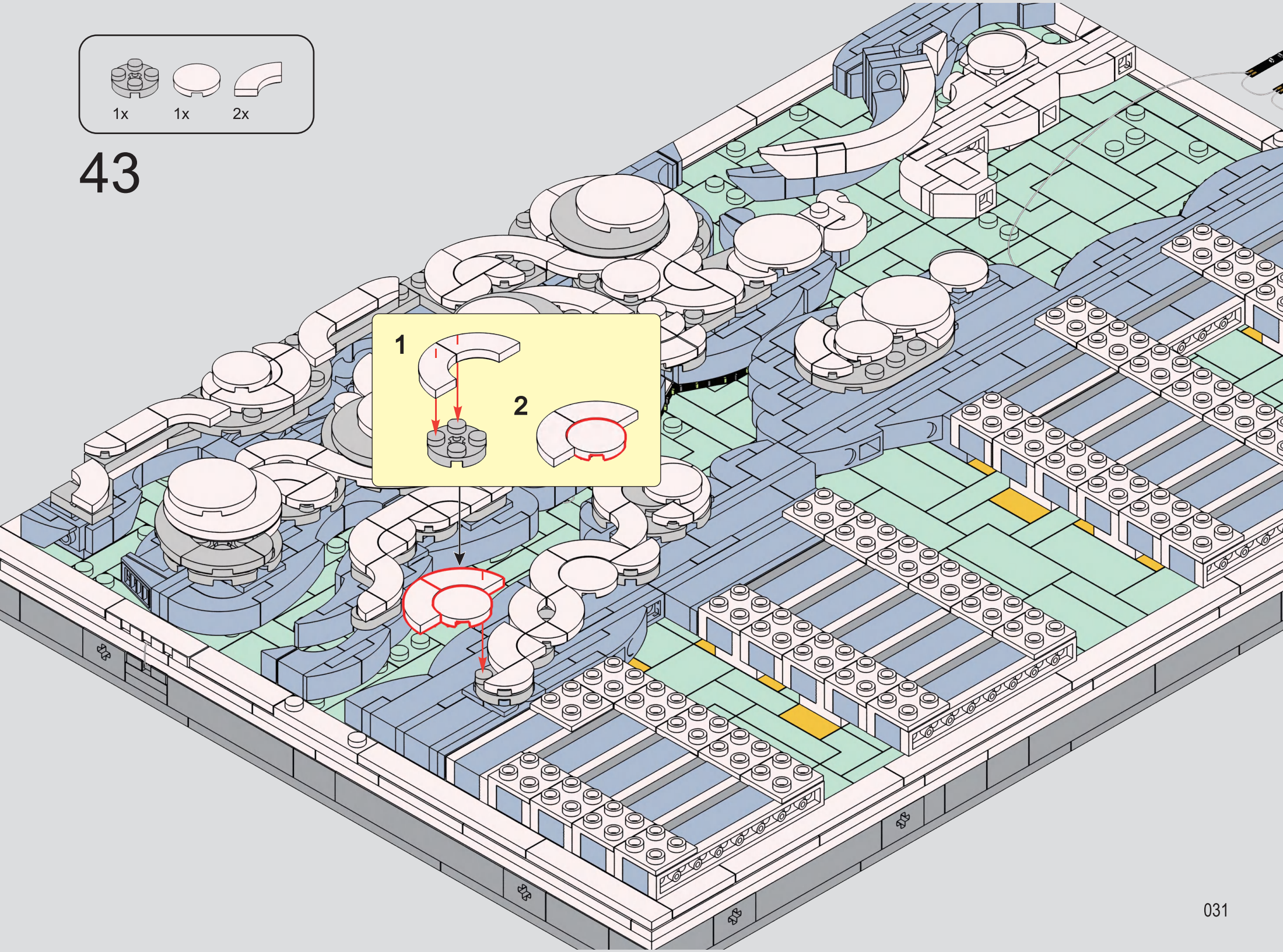

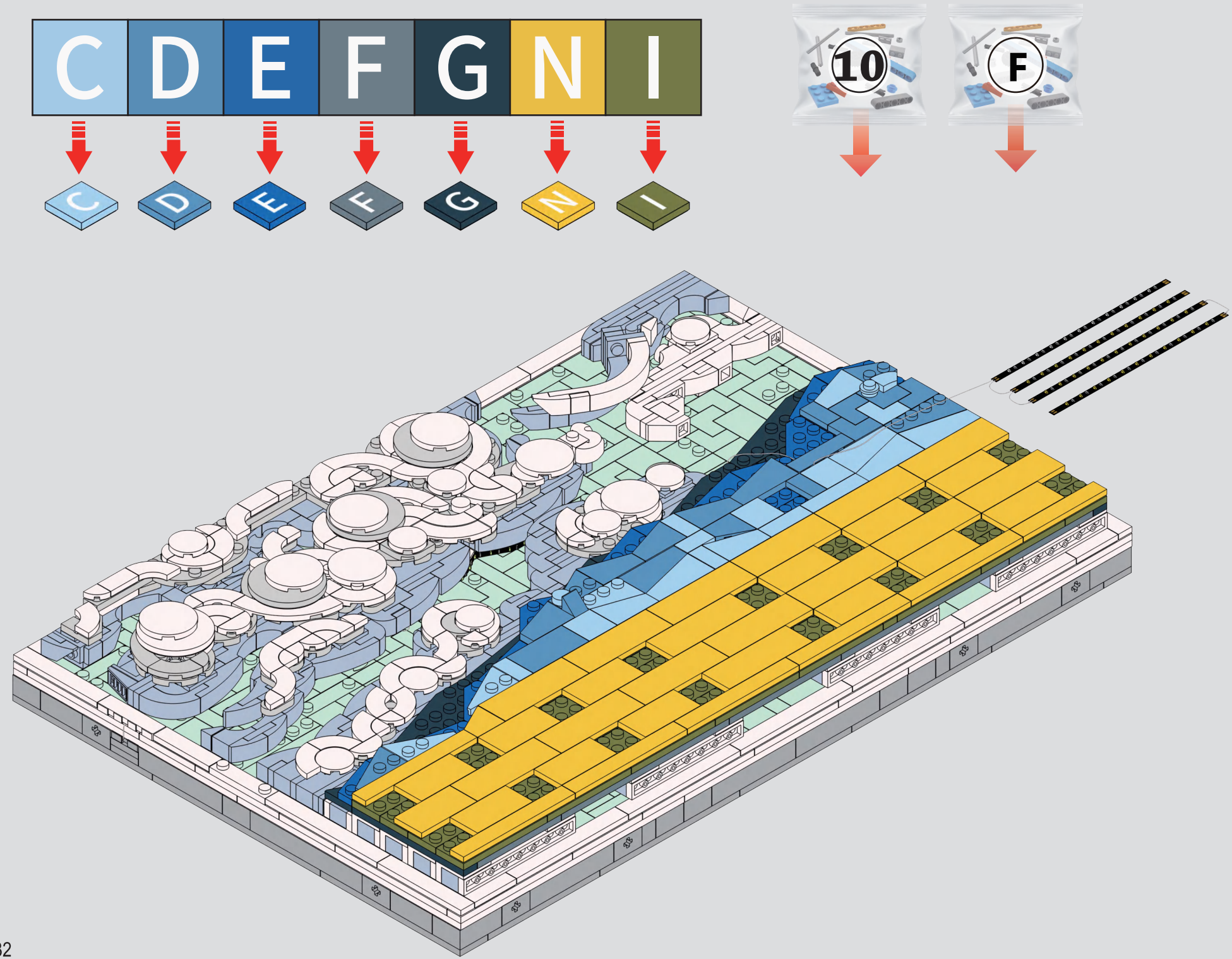
C D E F G N I
C D E F G N I
10
F

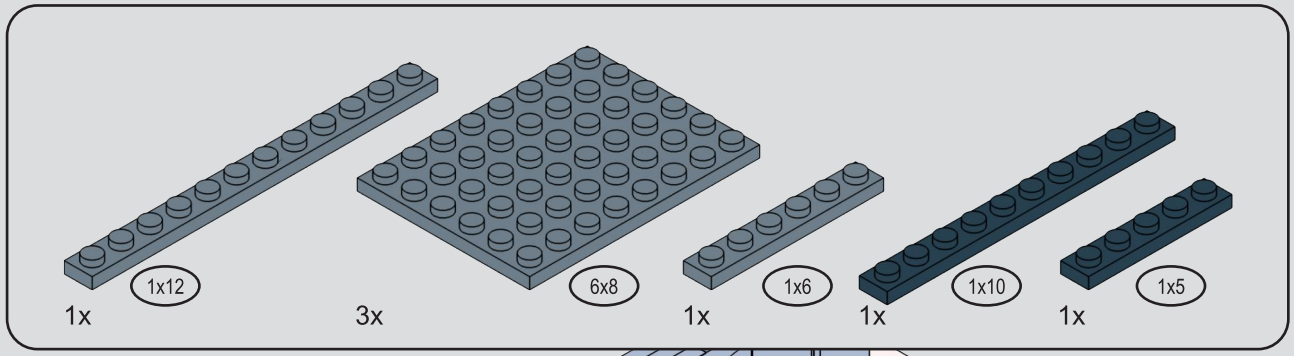

44

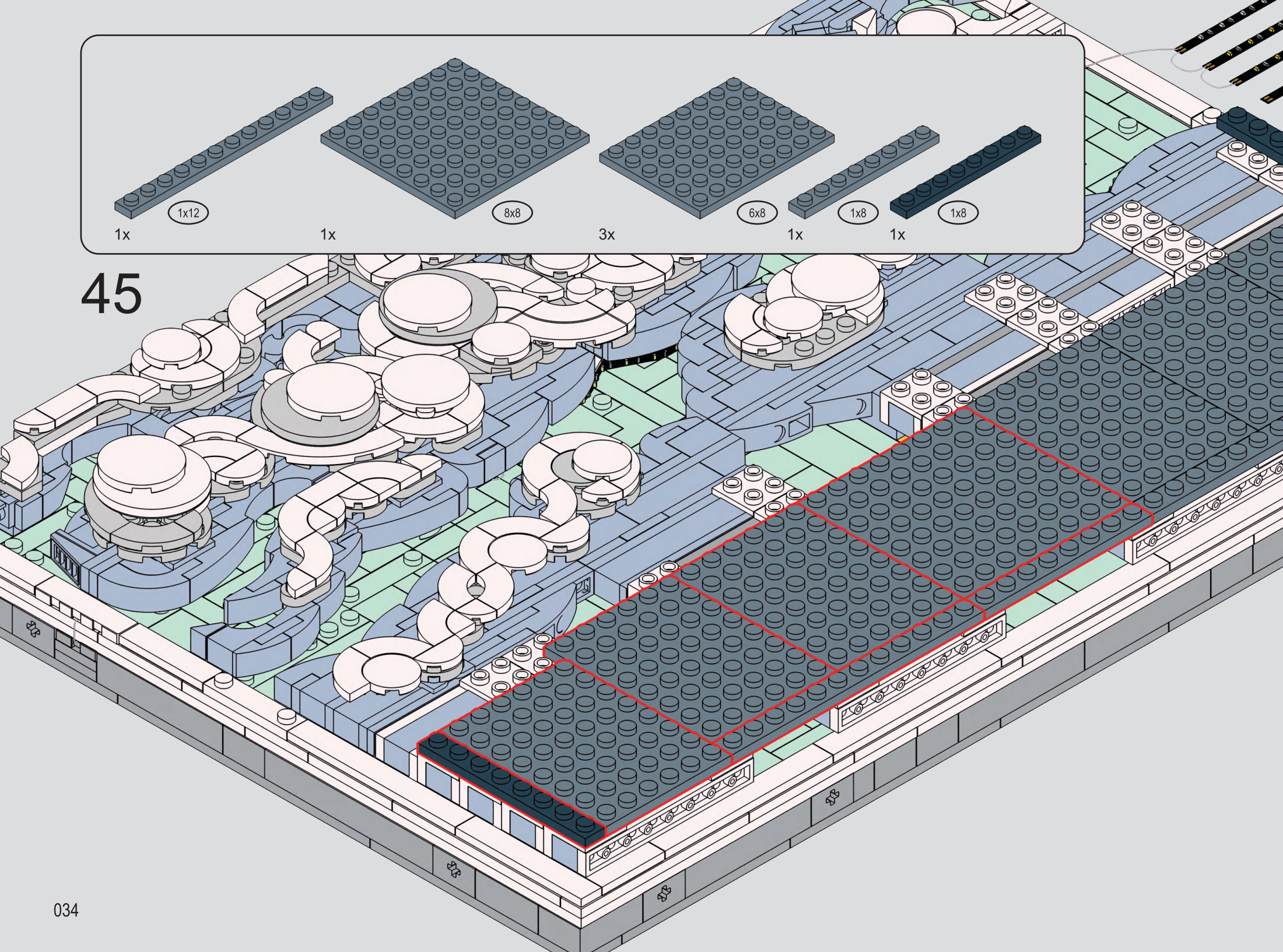

45

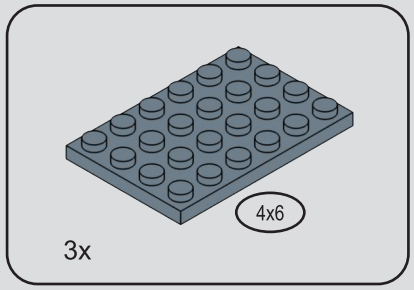

46

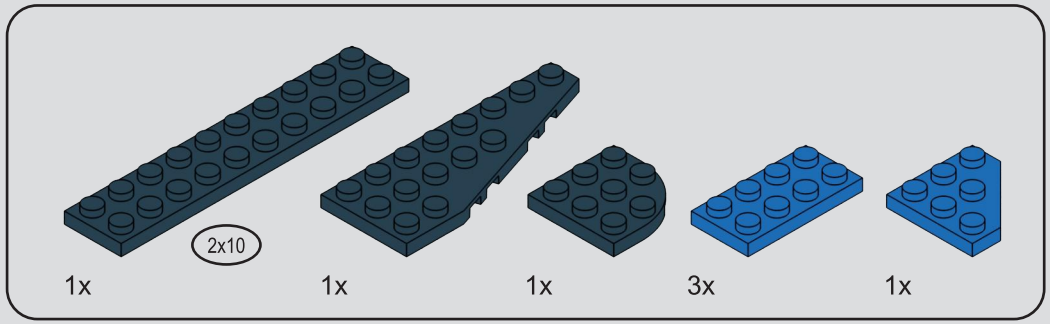

47

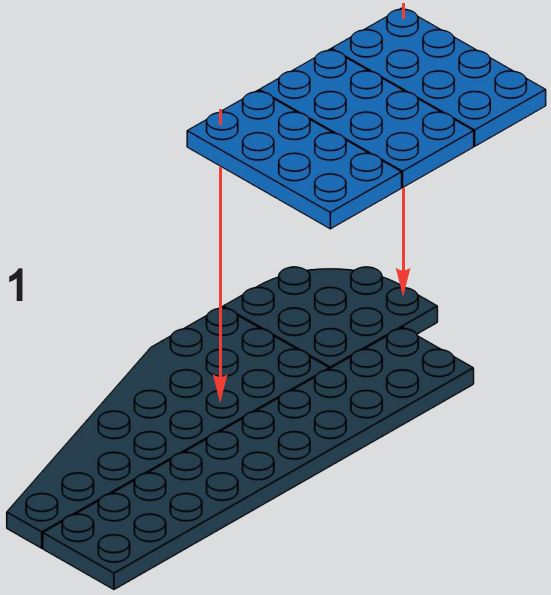

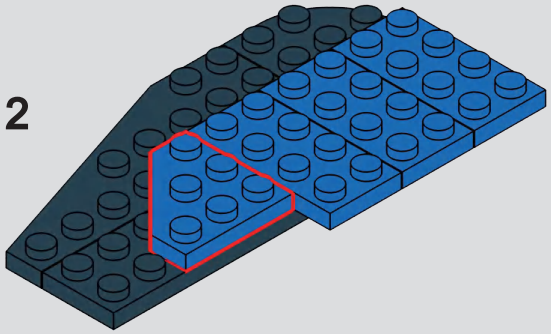

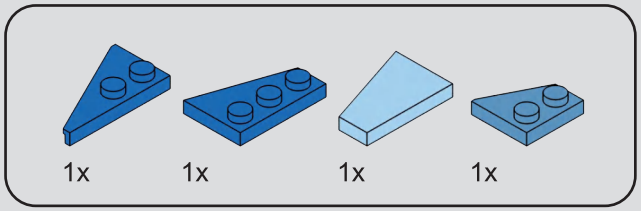

48

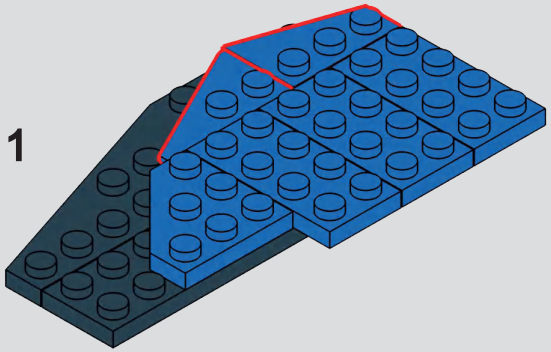

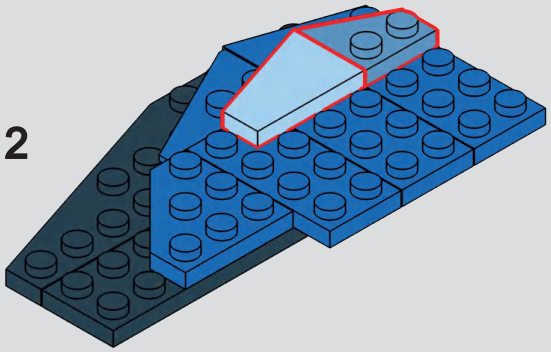

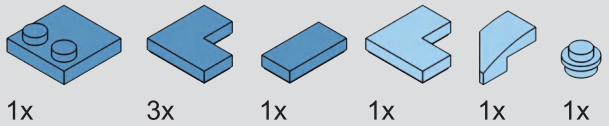

49

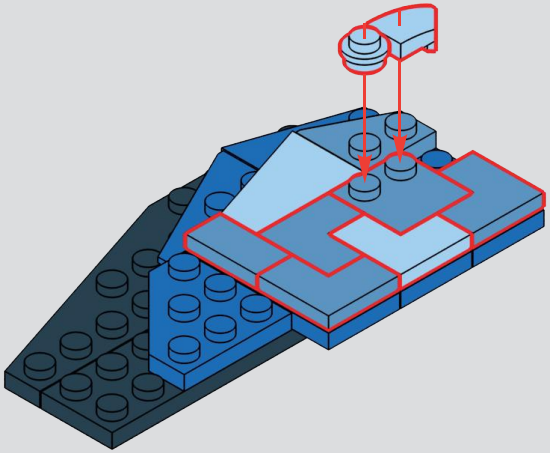

50

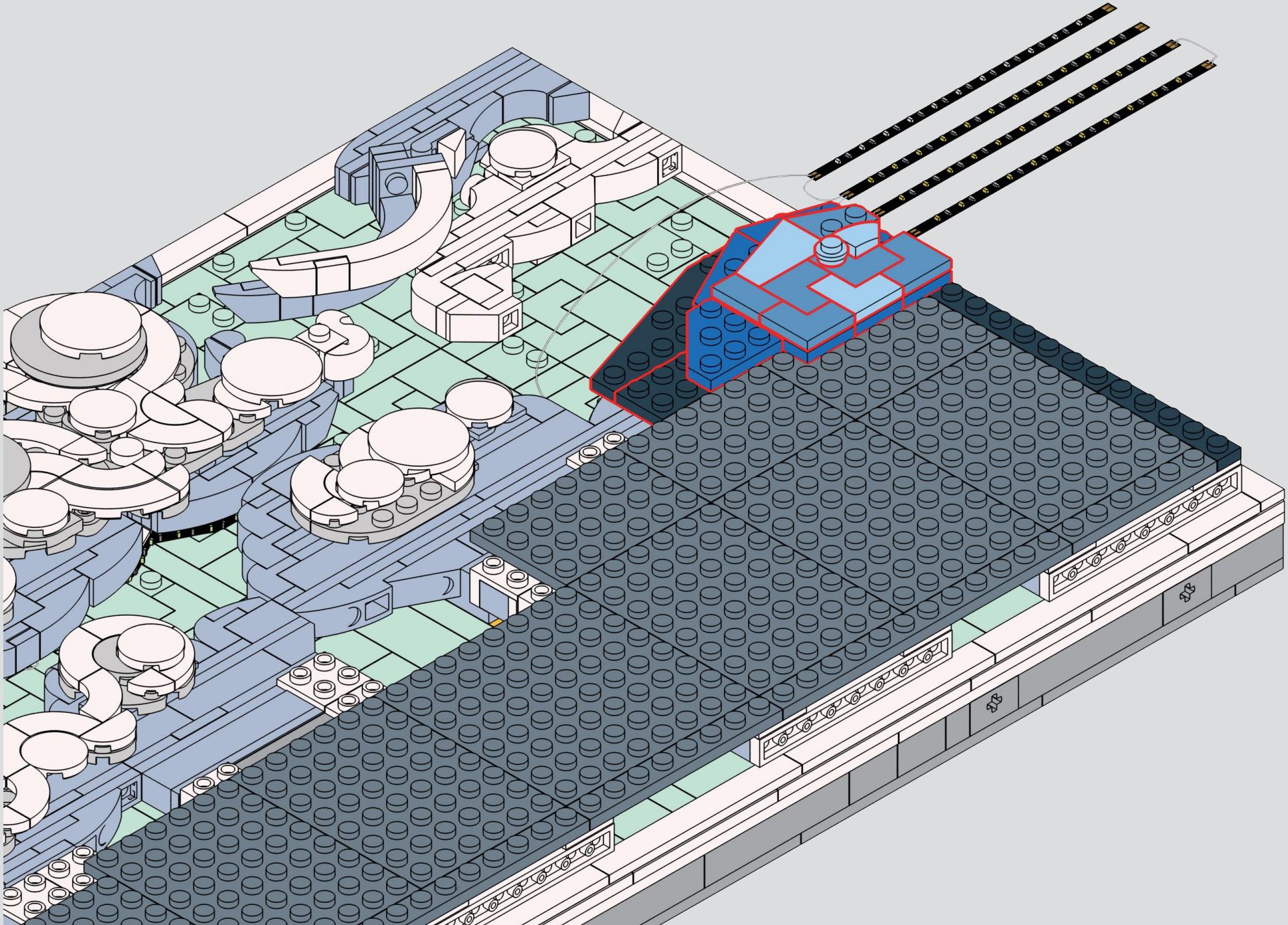

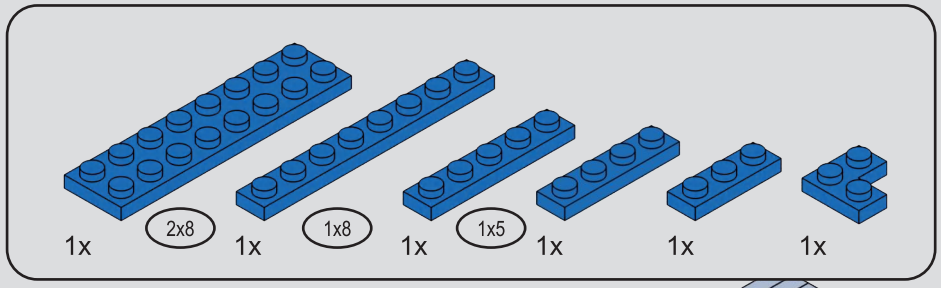

51

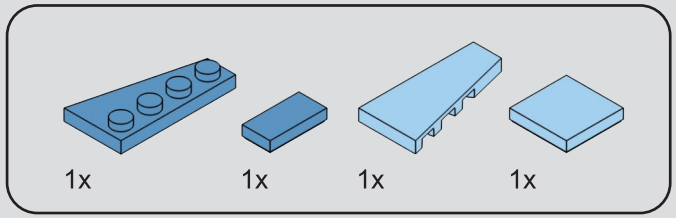

52

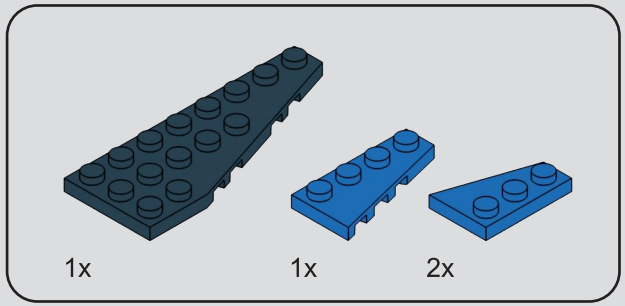

53

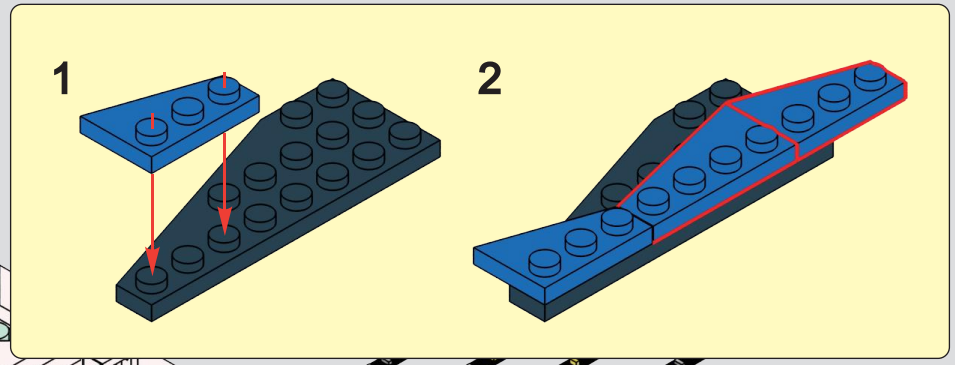

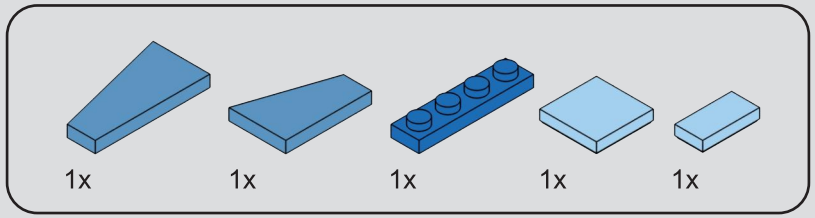

54

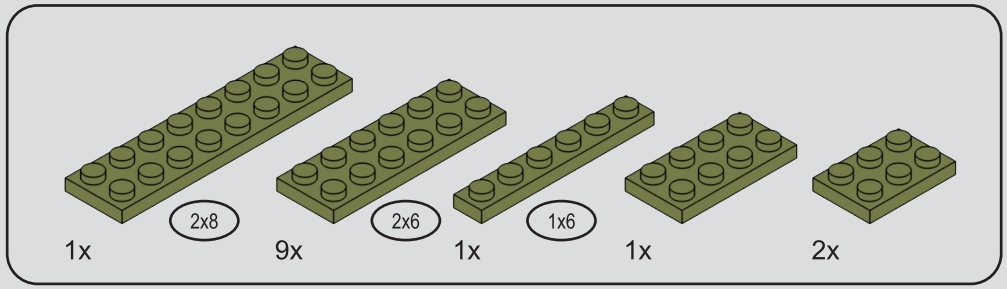

55

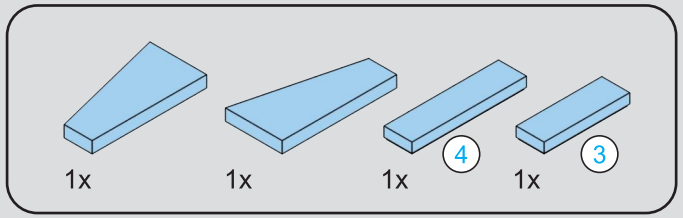

56

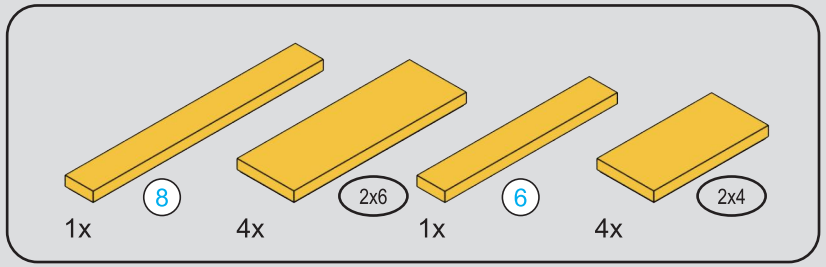

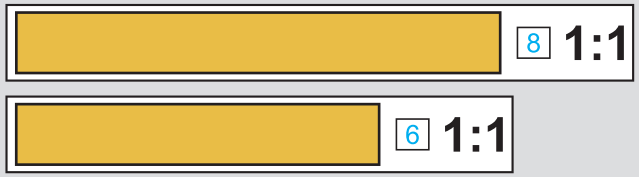

57

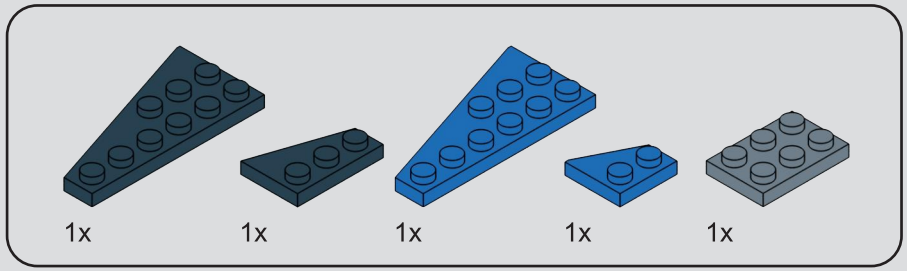

58

1

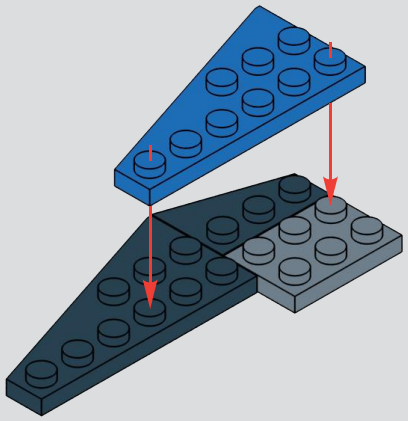

2

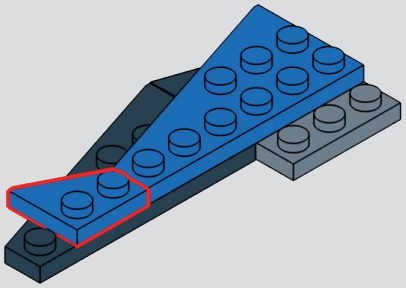

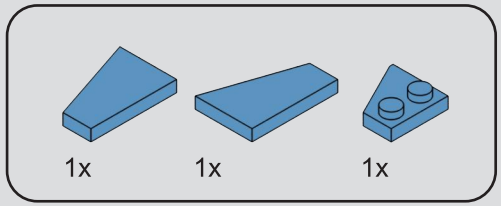

59

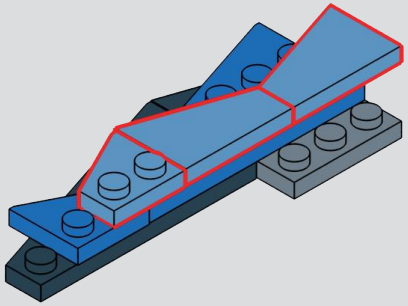

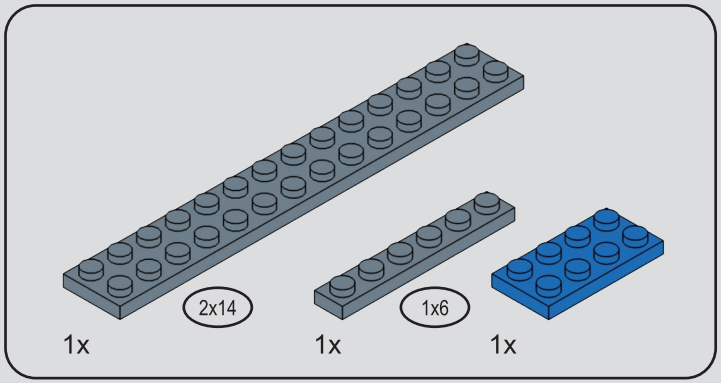

60

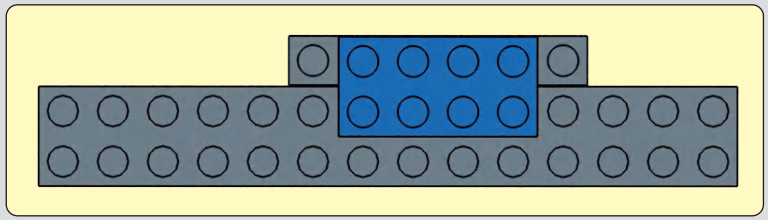

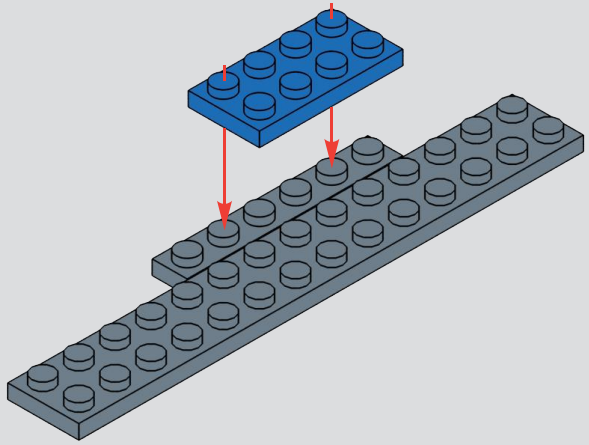

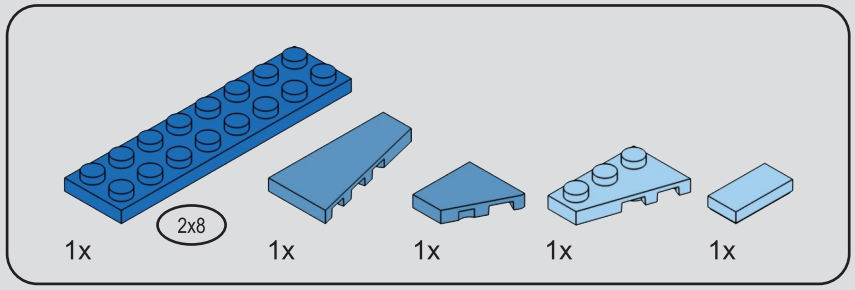

61

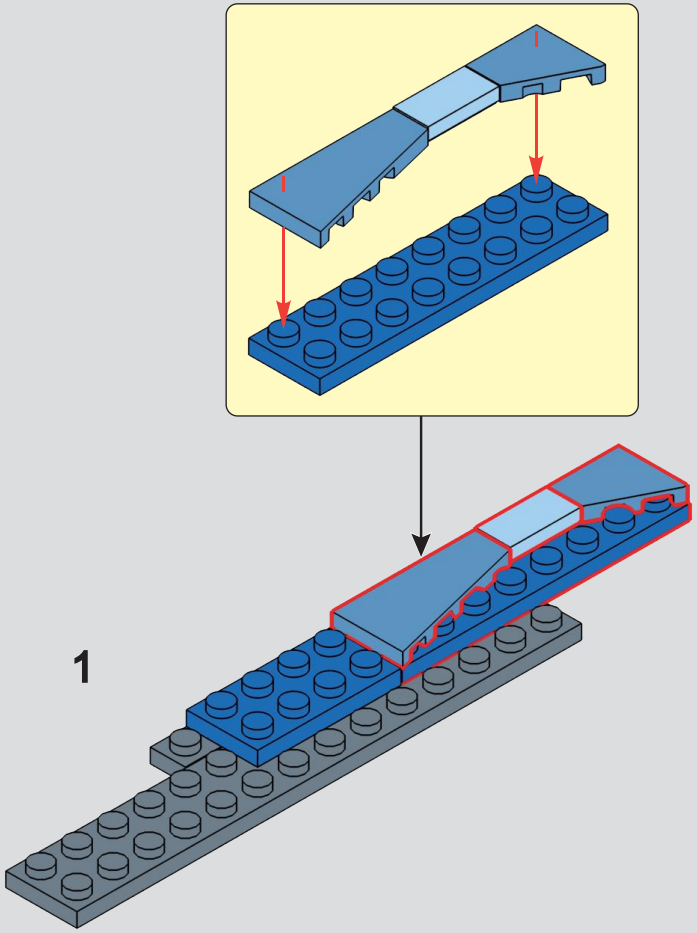

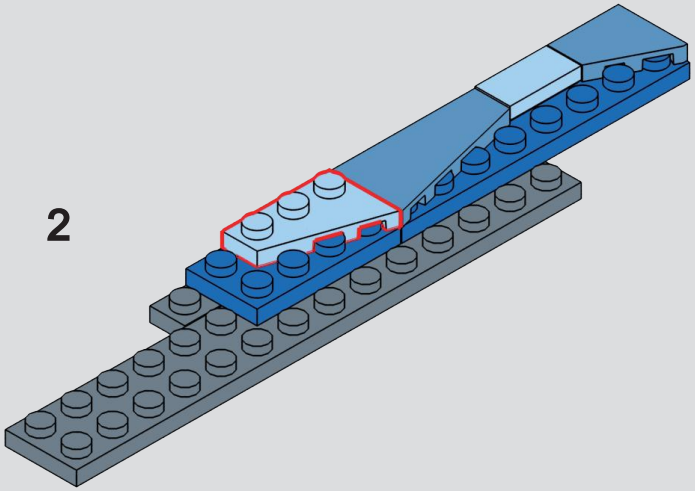

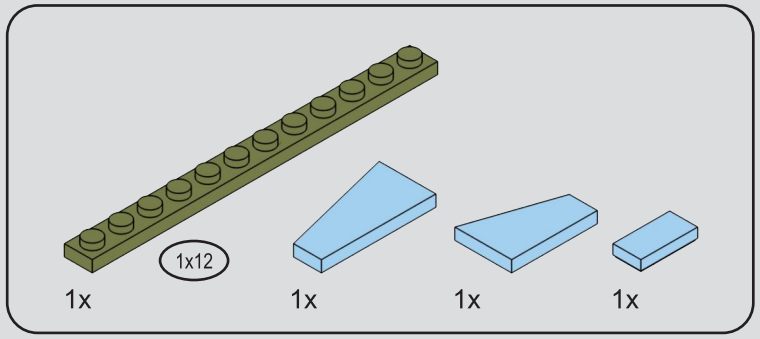

62

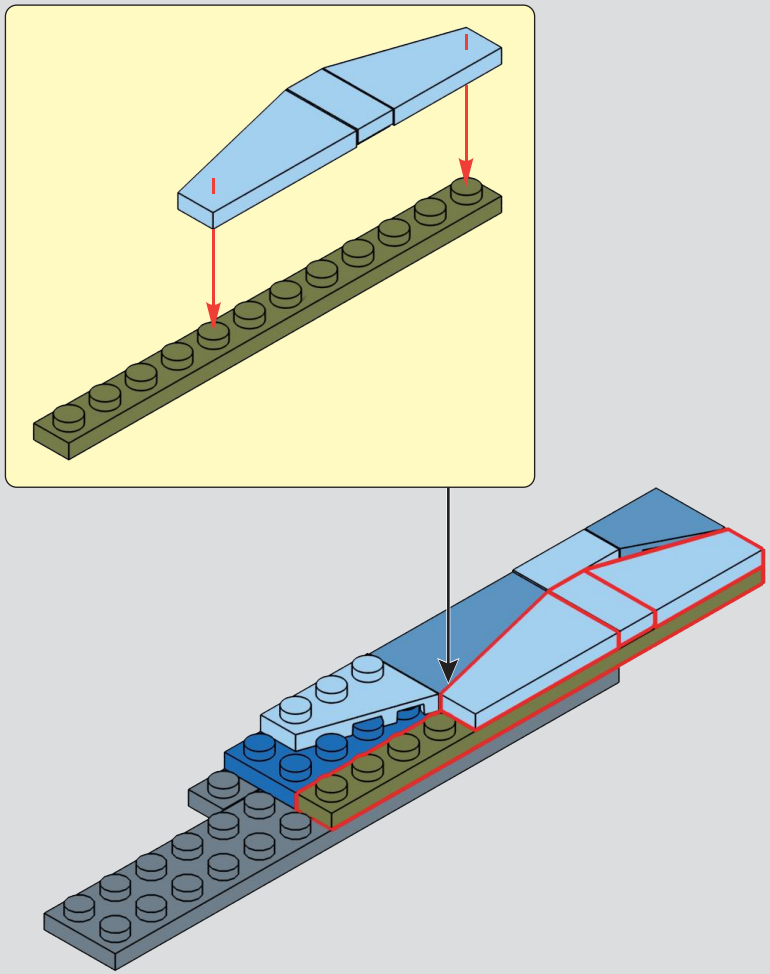

63

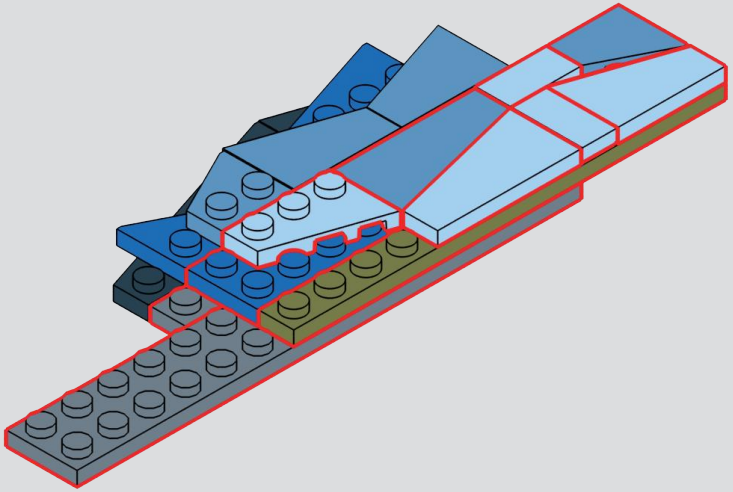

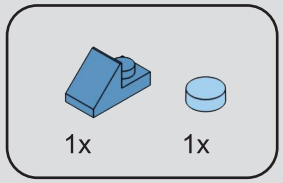

64

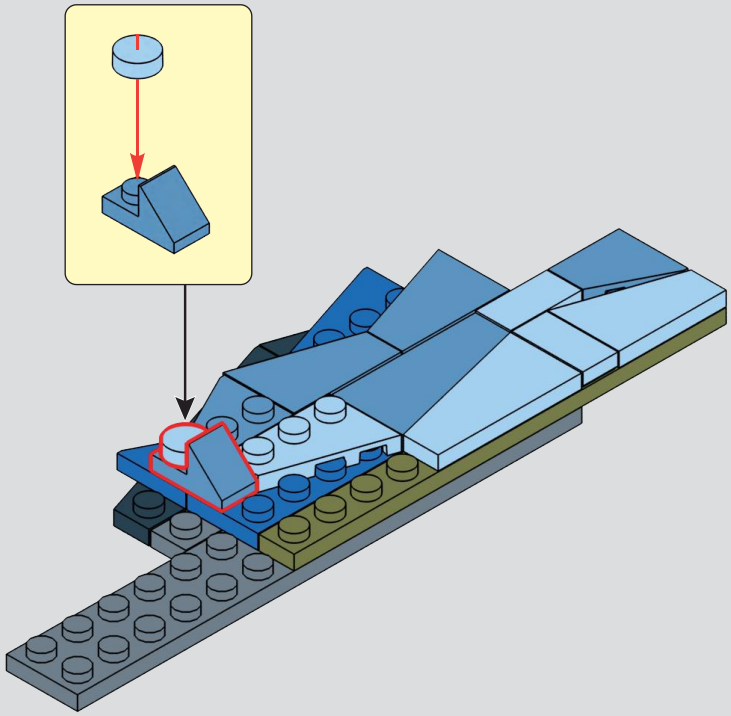

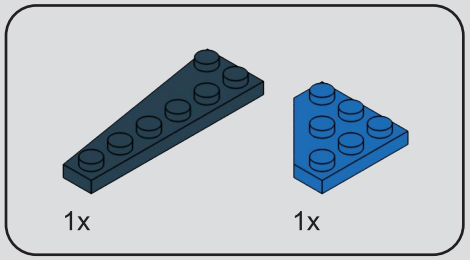

65

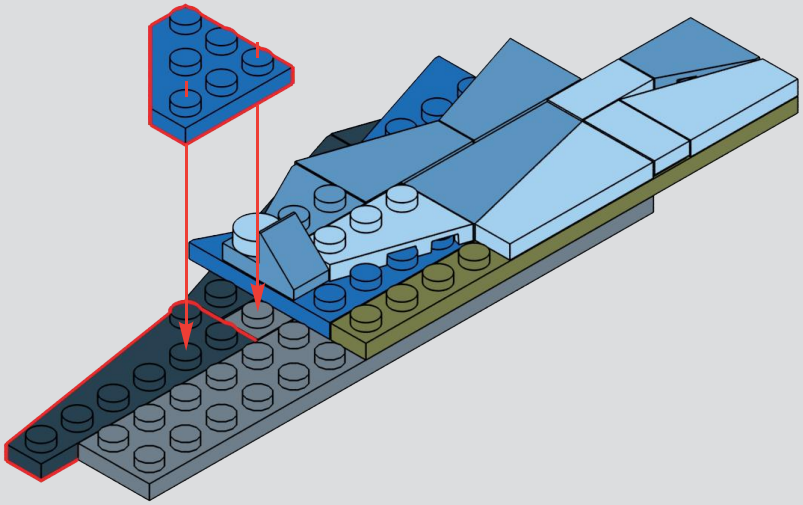

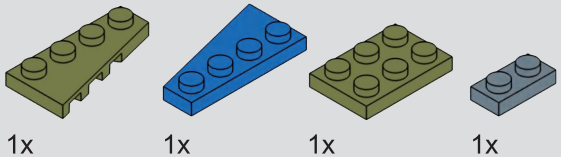

66

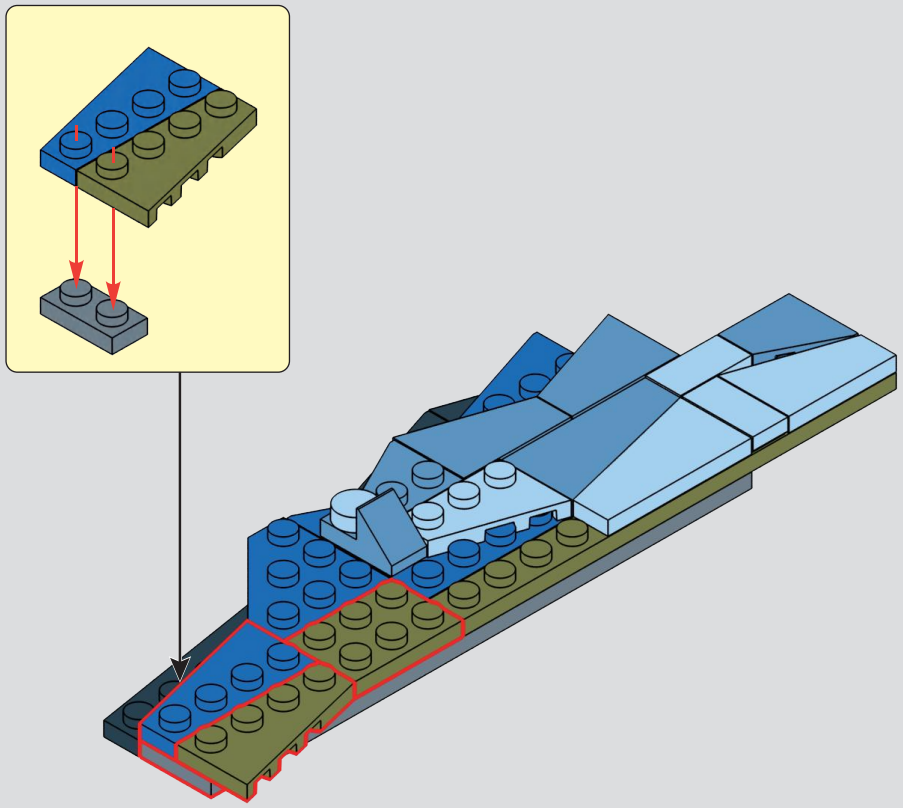

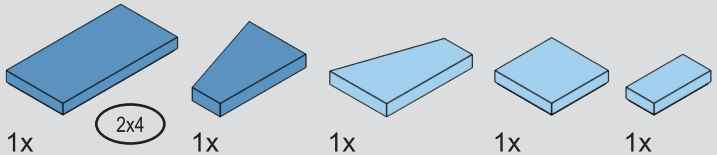

67

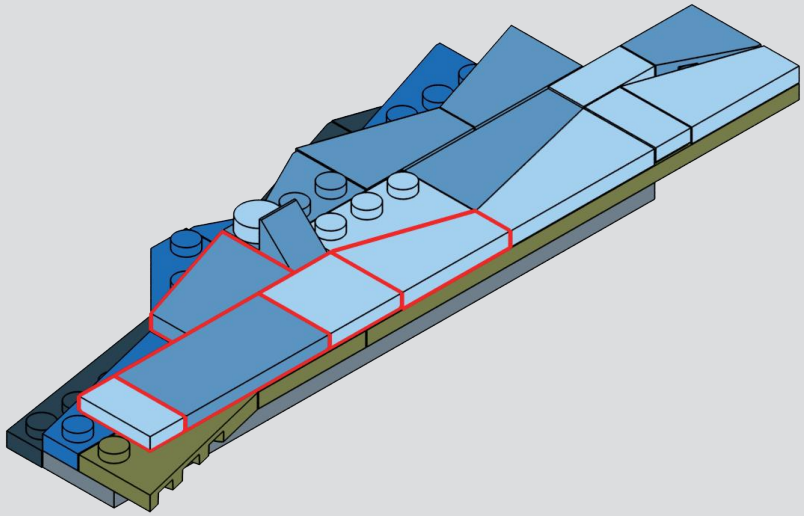

68

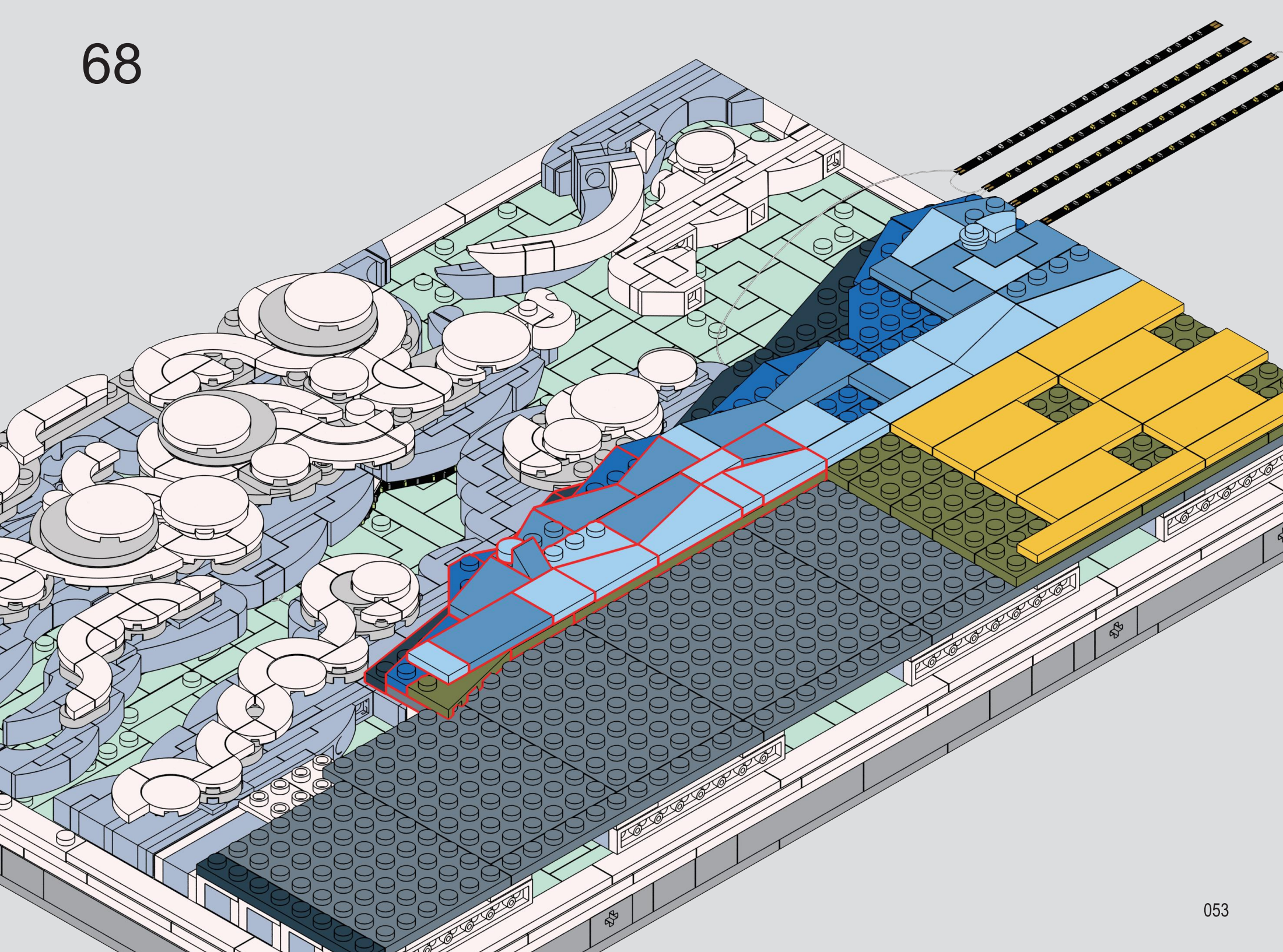

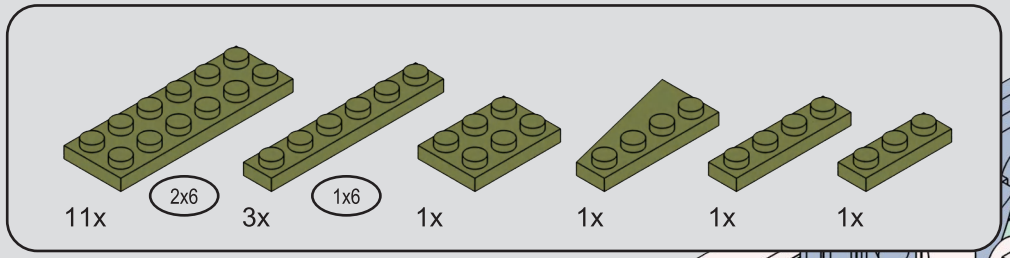

69

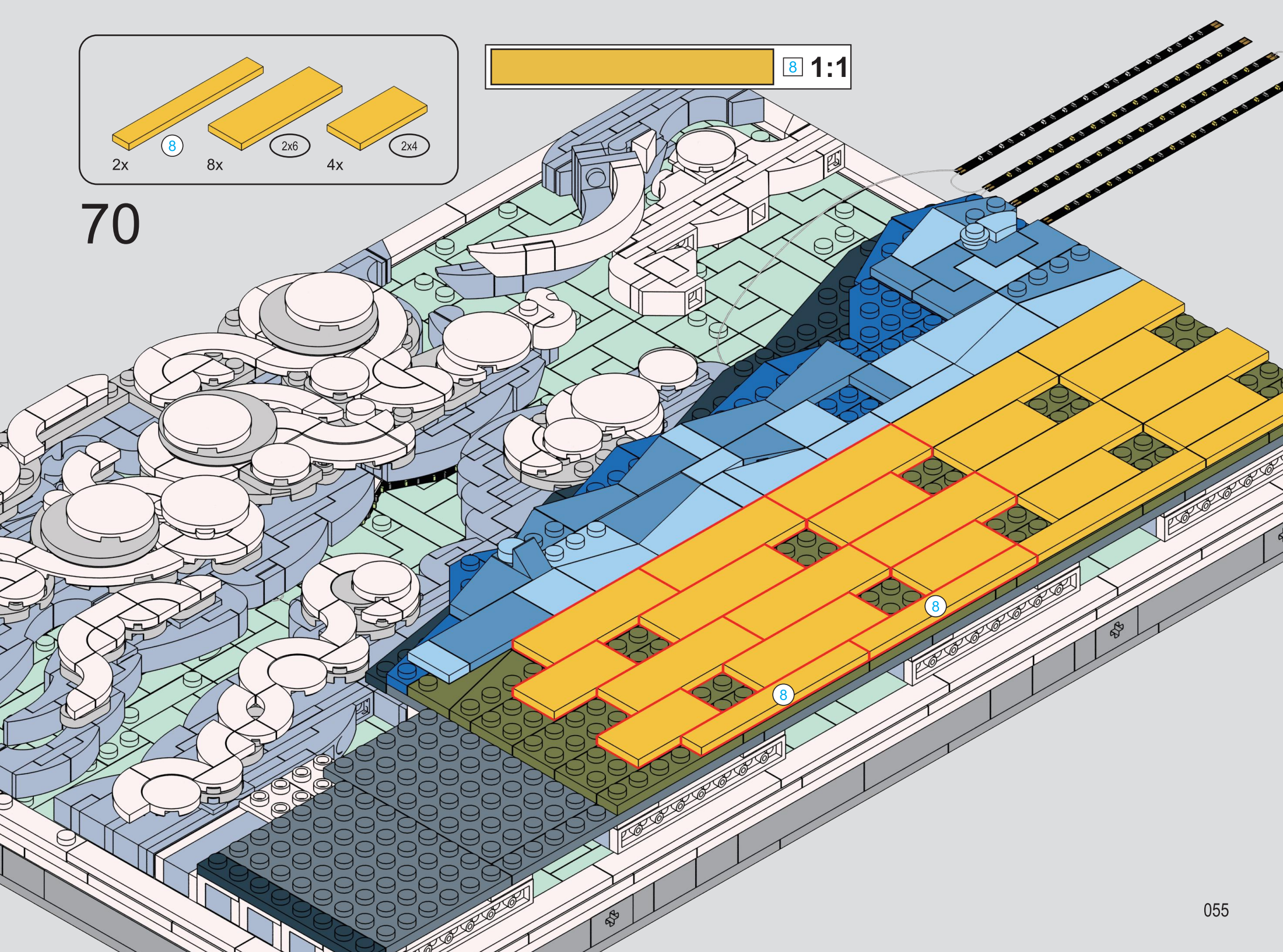
8
2x
8x
2x6
4x
2x4
70
8 1:1
8
8

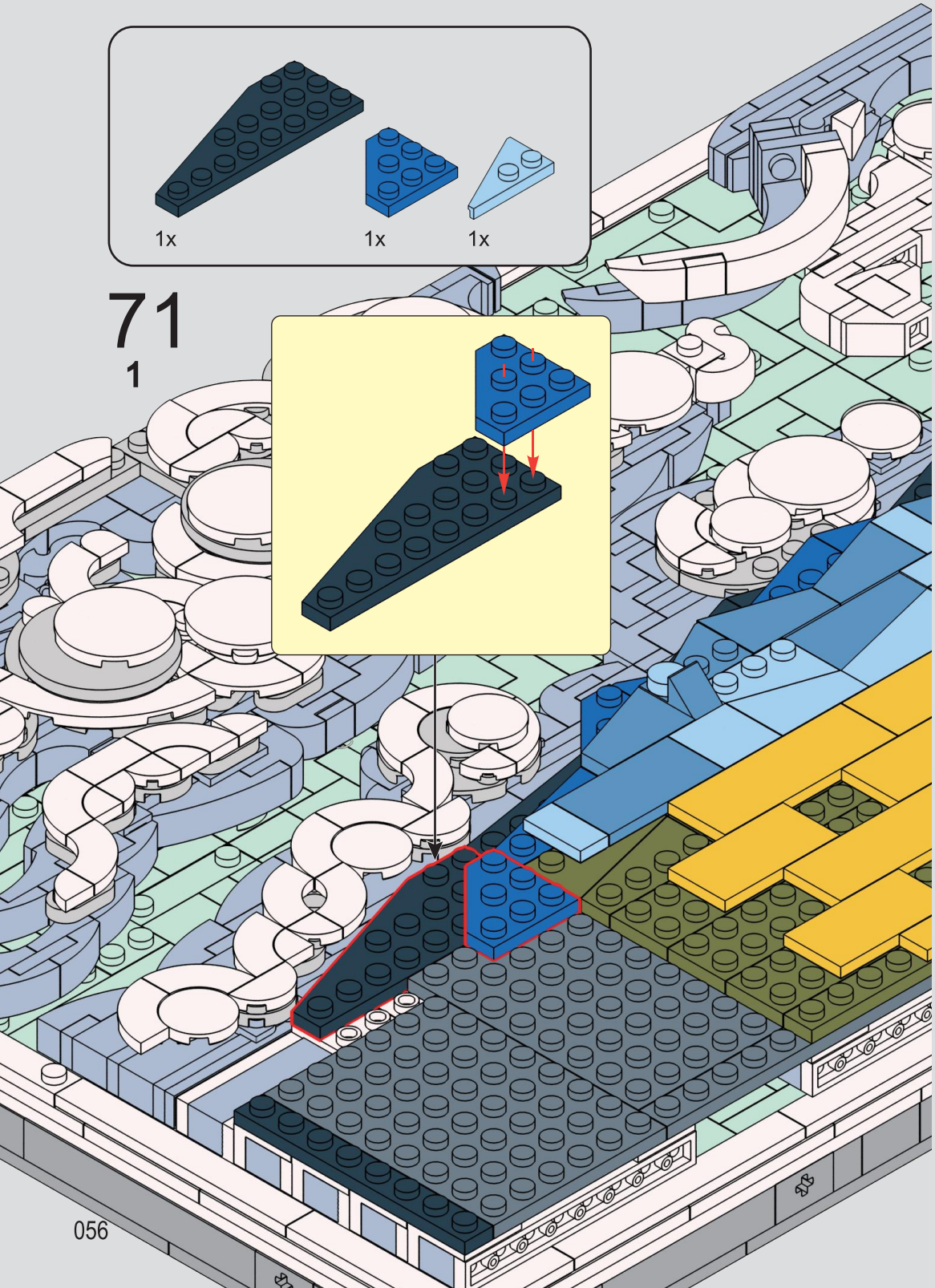
1x
1x
1x
71
1

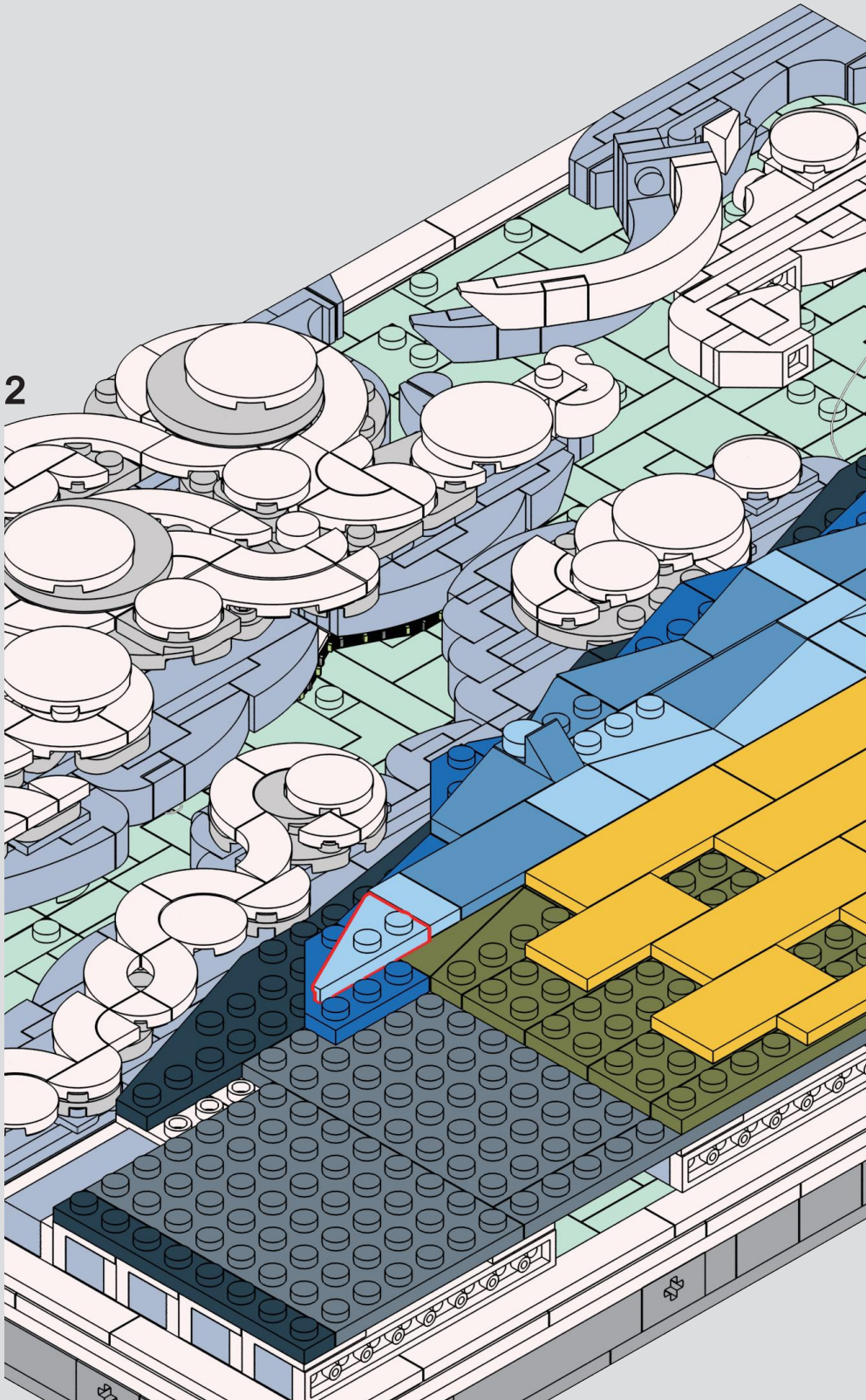
2

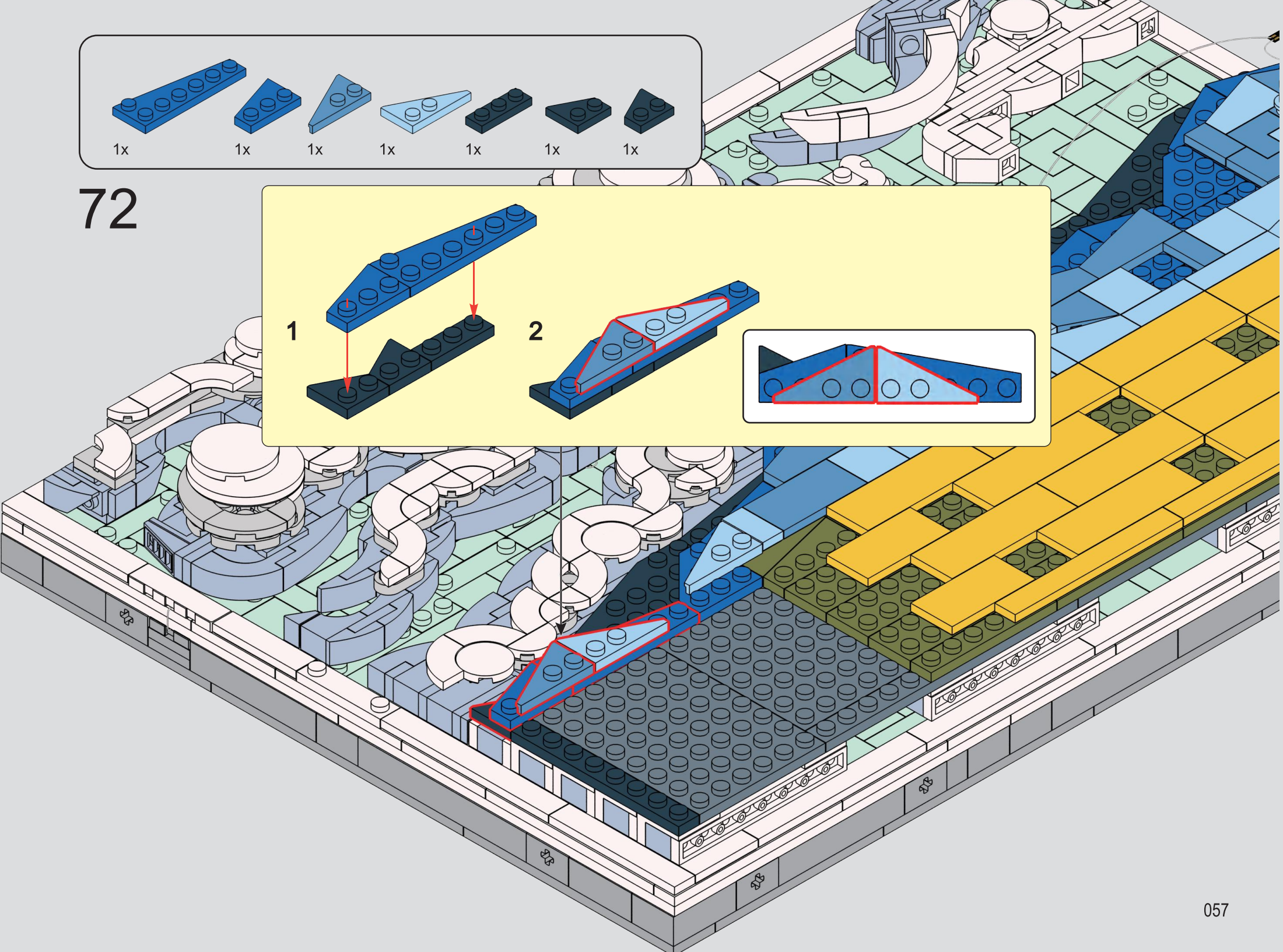
1x
1x
1x
1x
1x
1x
1x
72
1
2

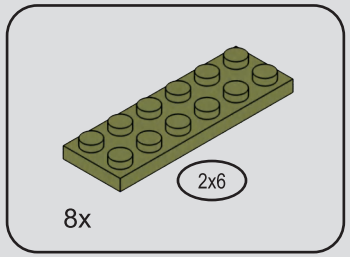

73

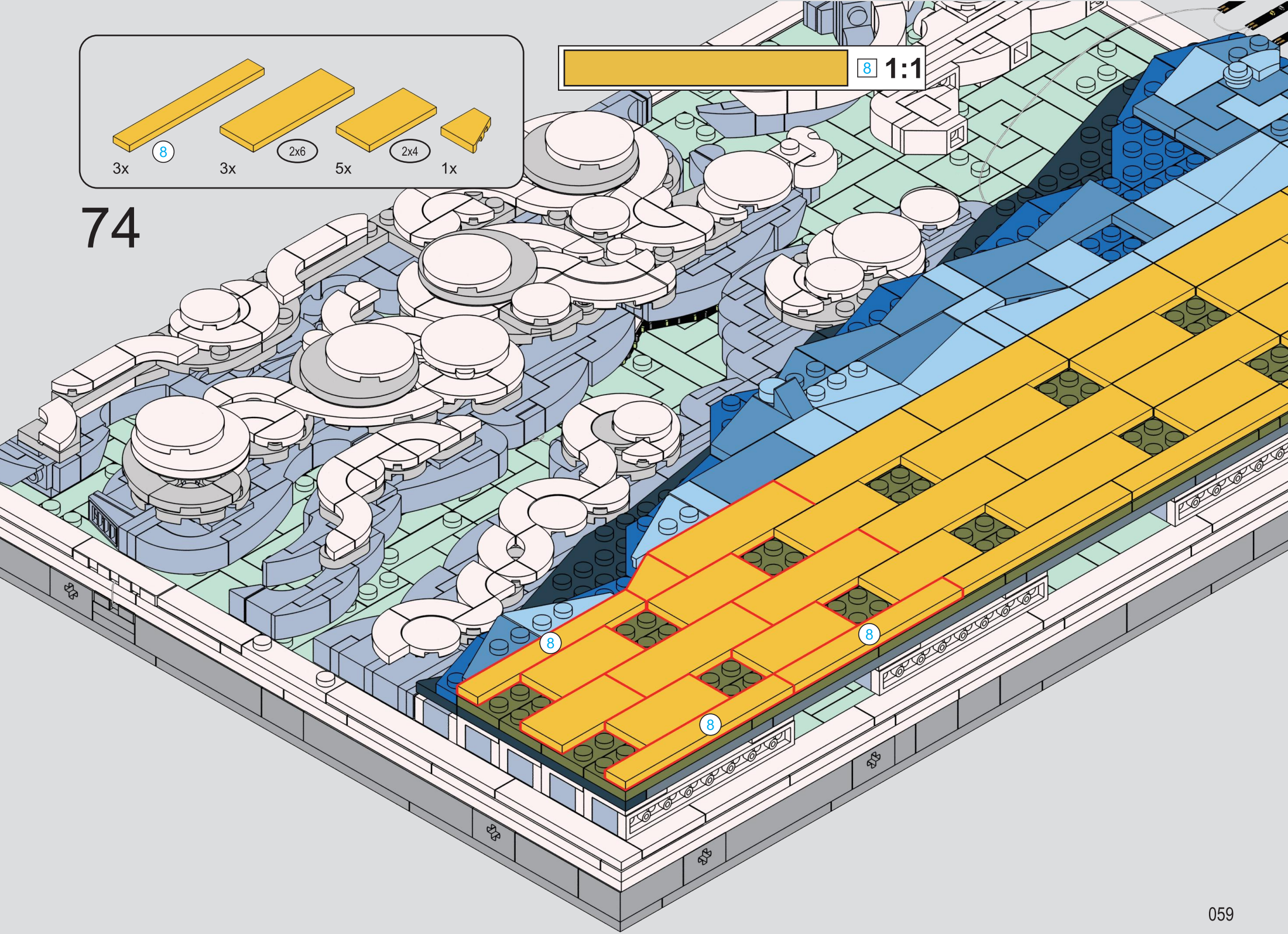
8
1:1
3x
8
3x
2x6
5x
2x4
1x
74
8
8
8

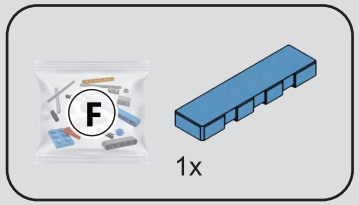

75

1

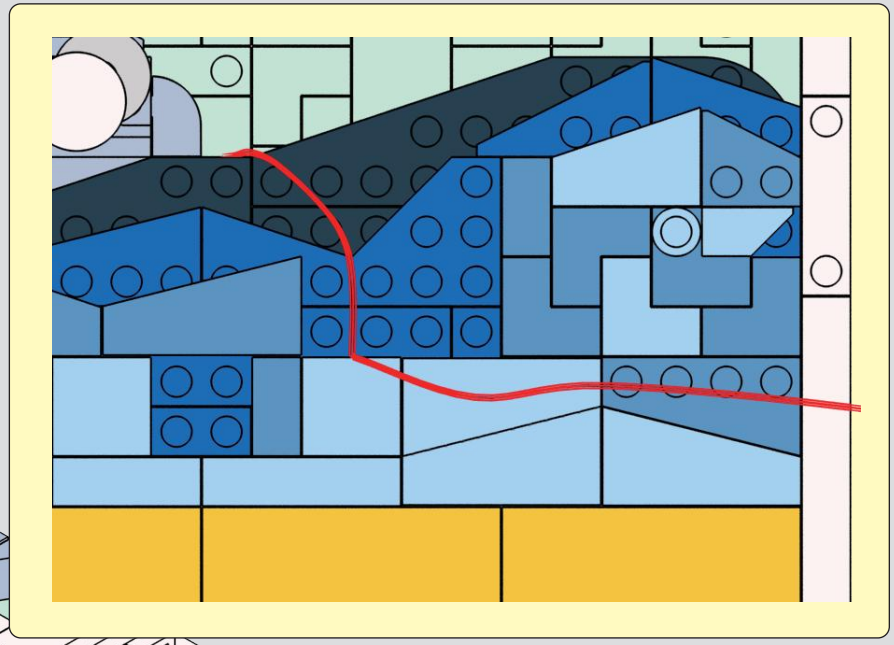

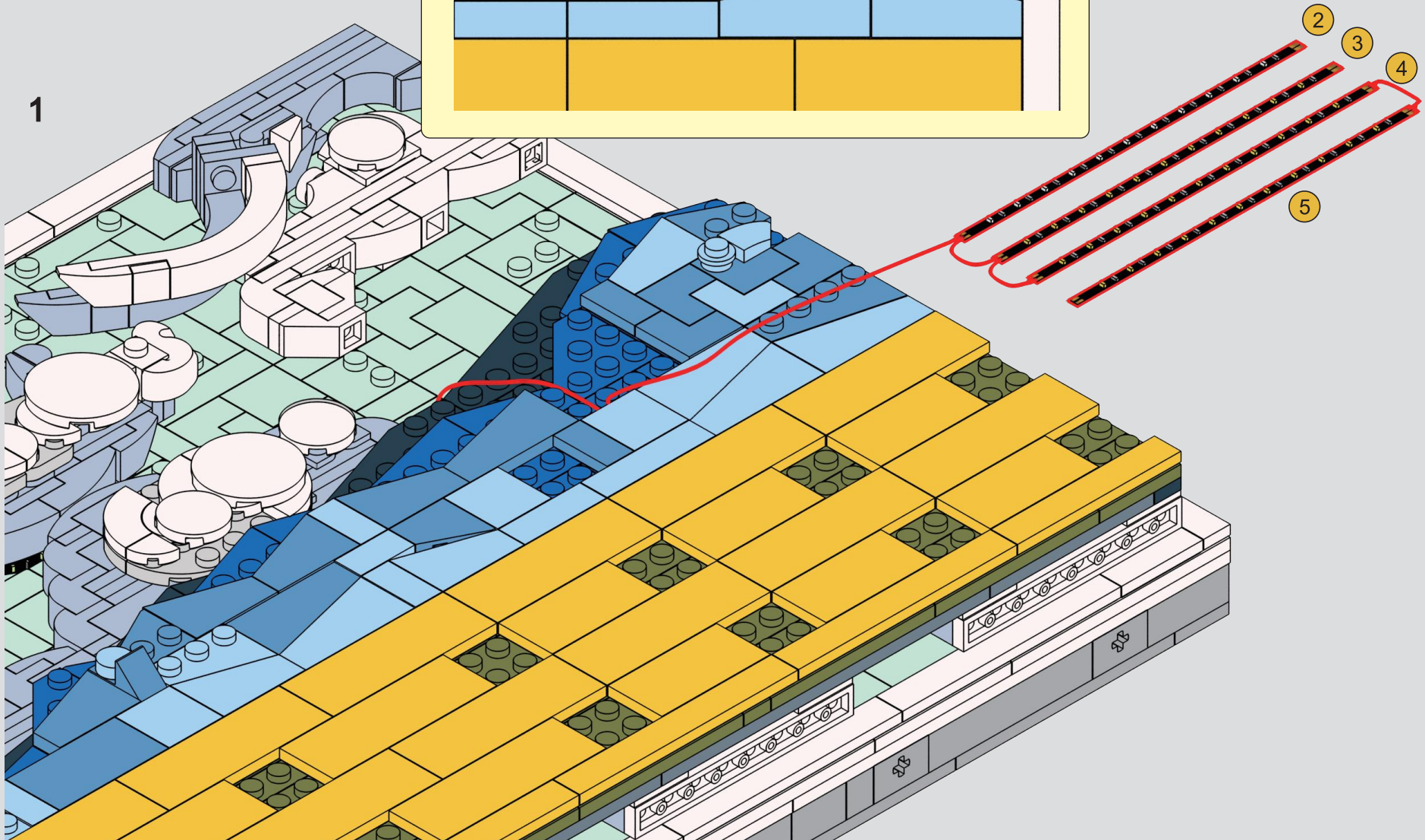

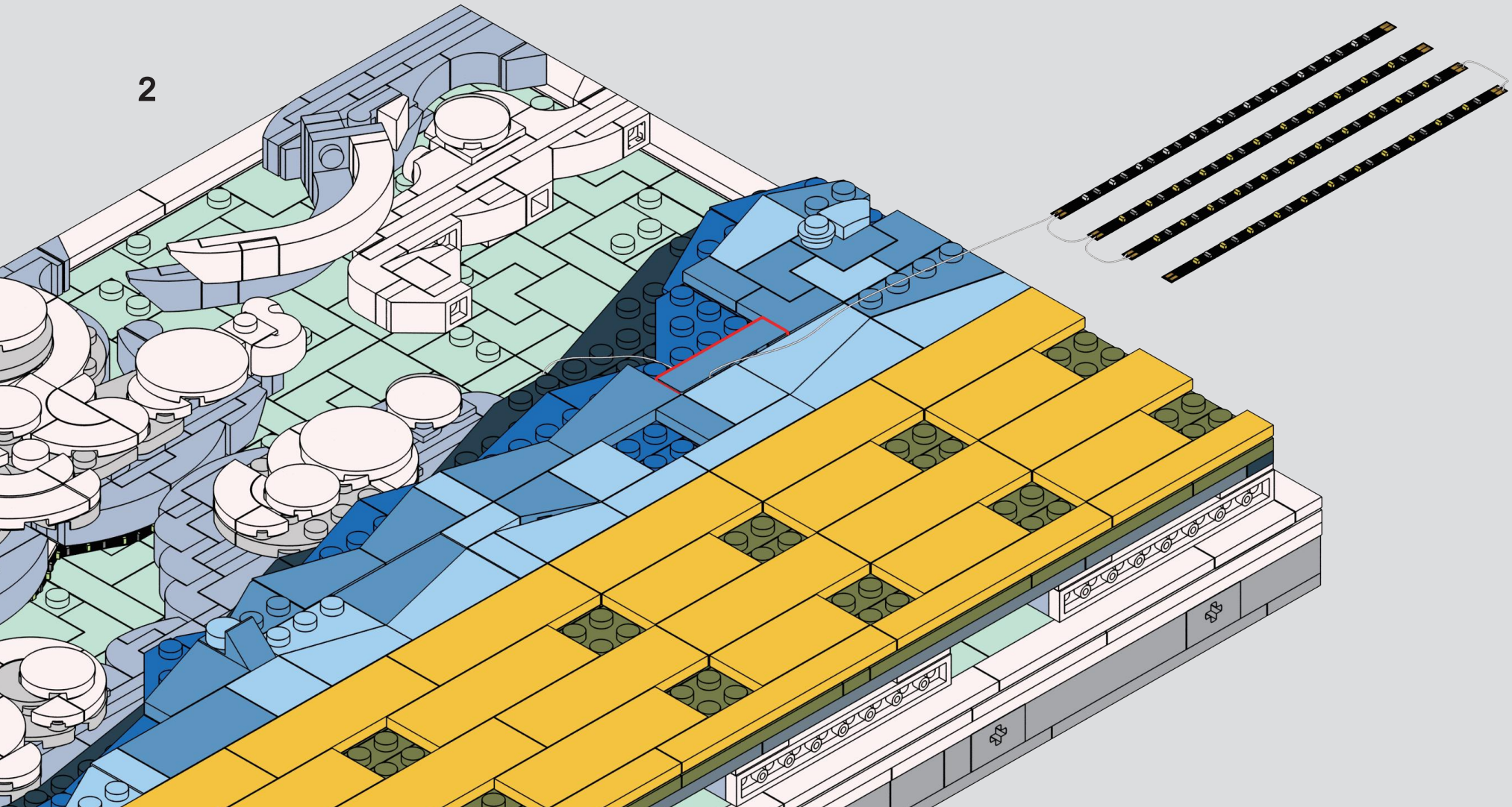
2

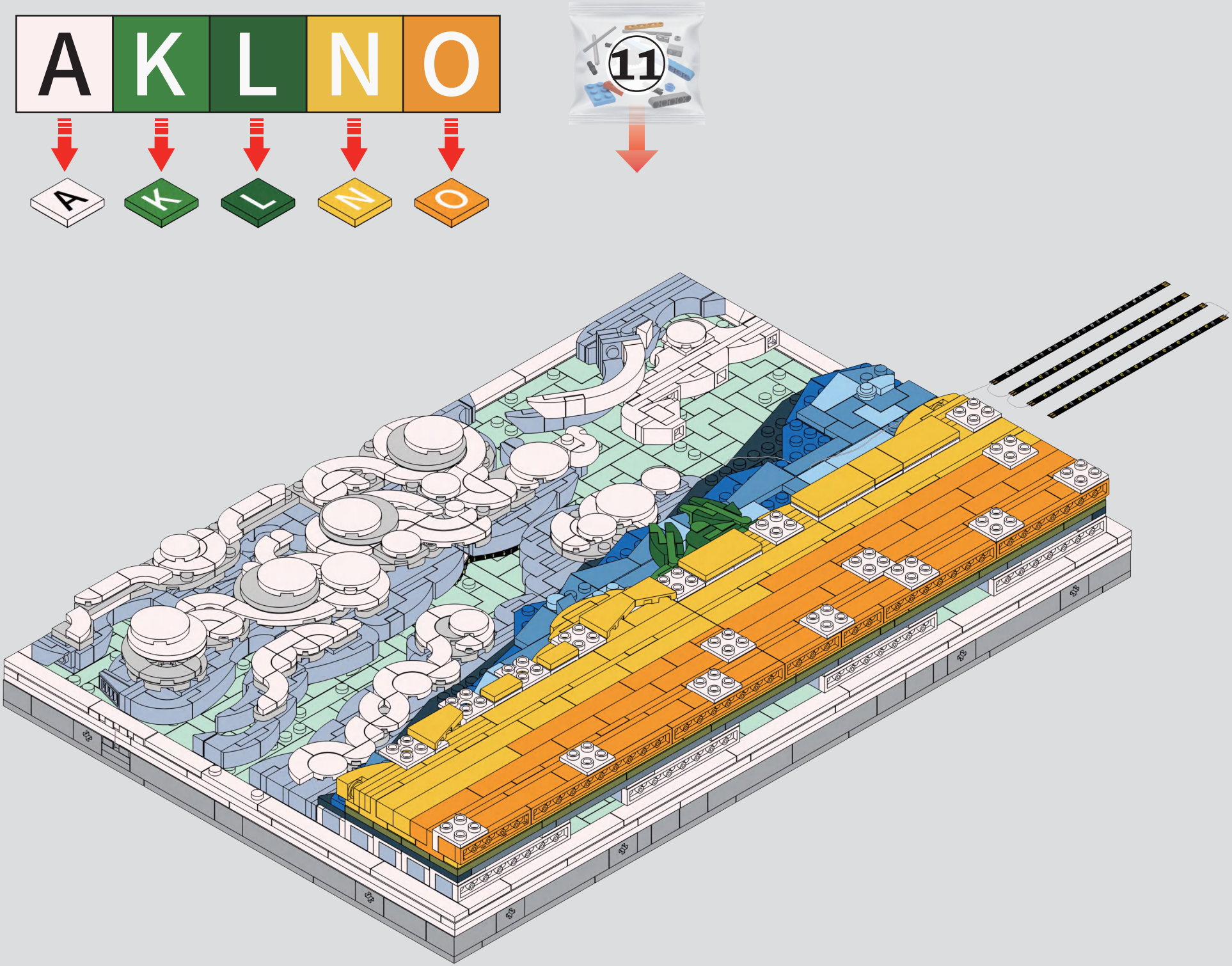
A K L N O
11

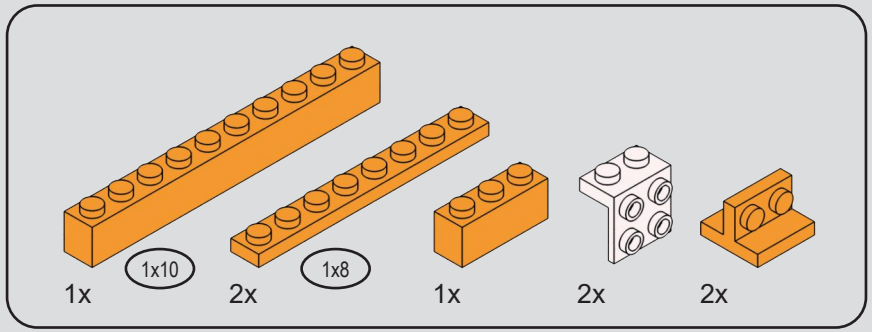

76

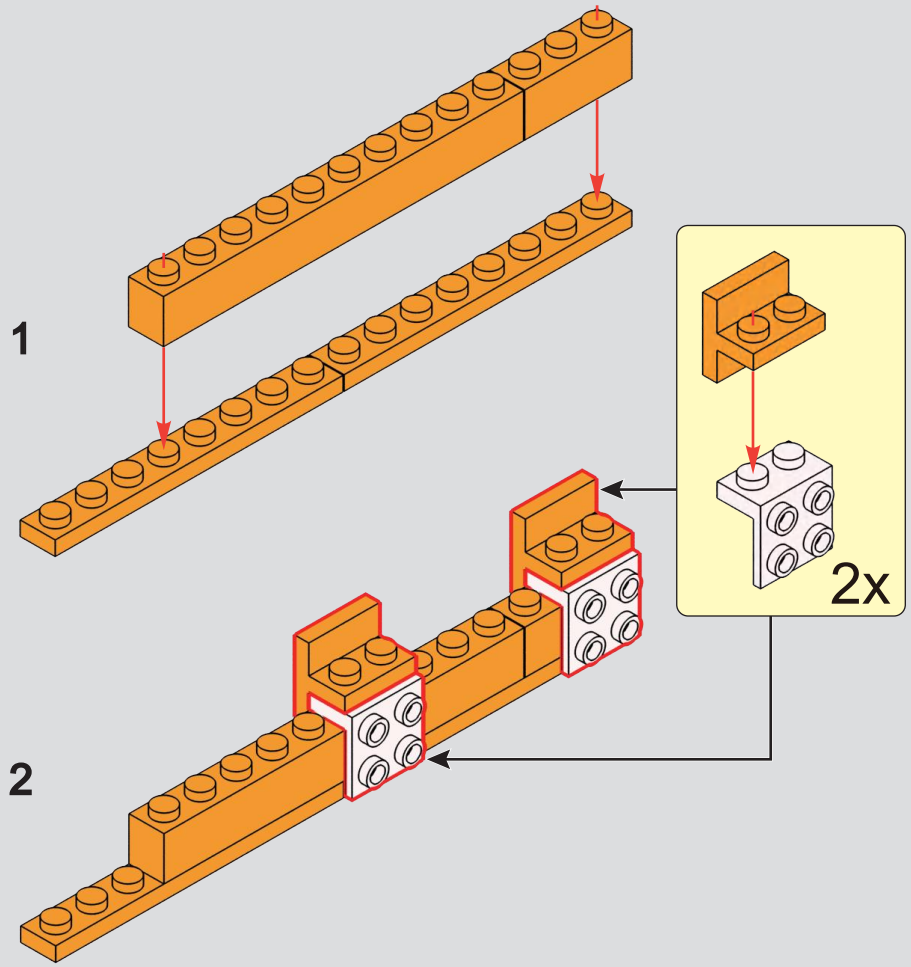

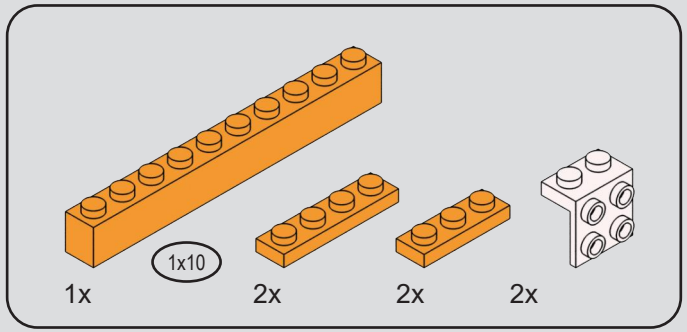

77

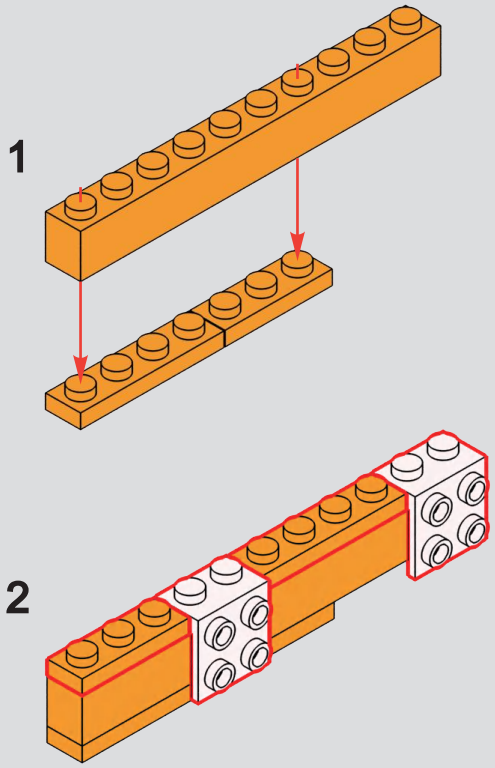

78

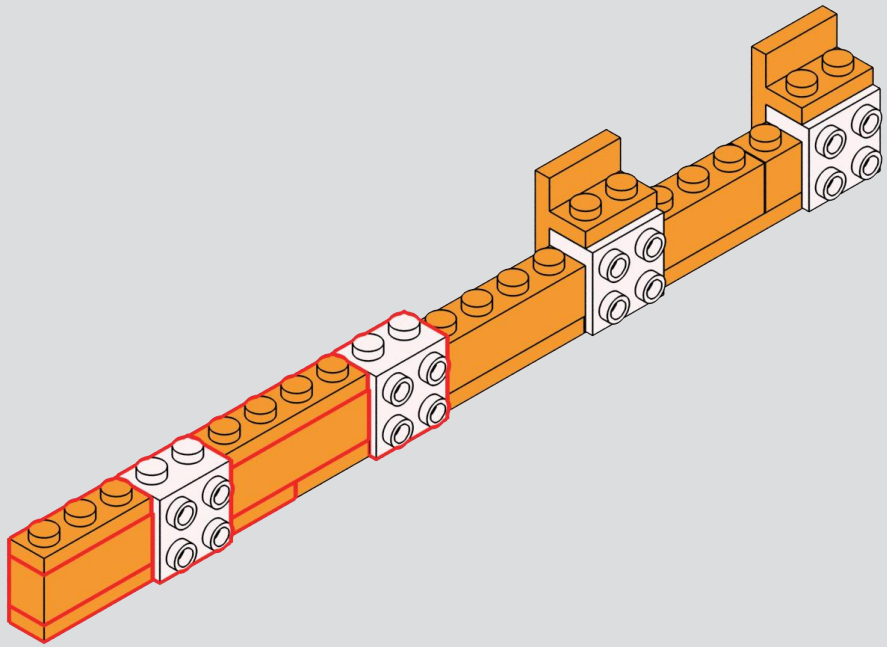

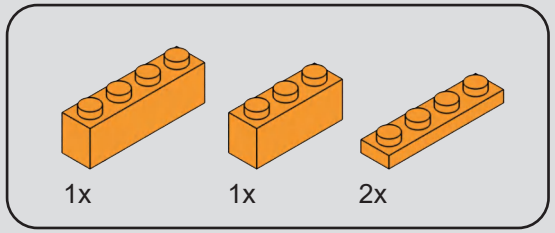

79

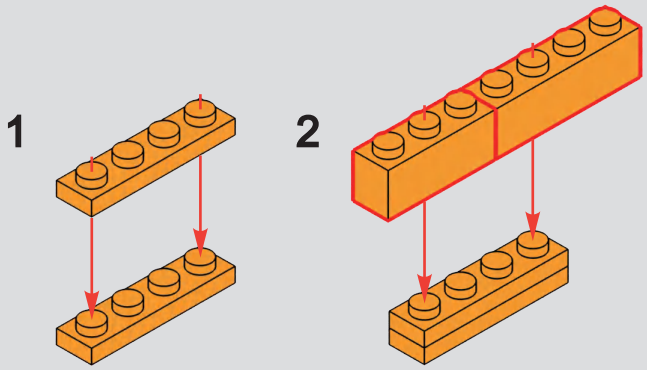

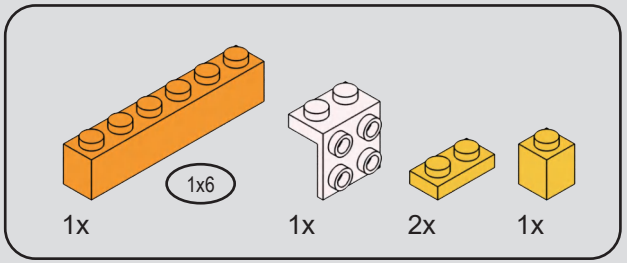

80

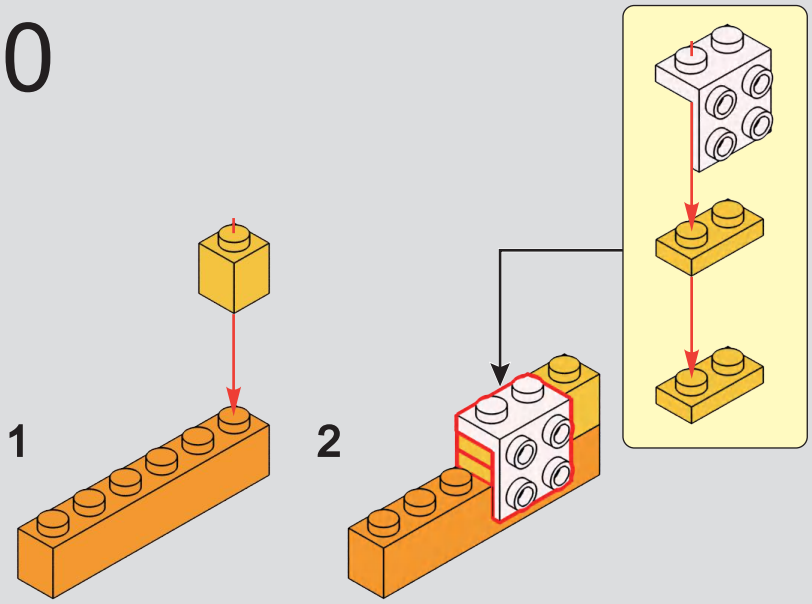

81

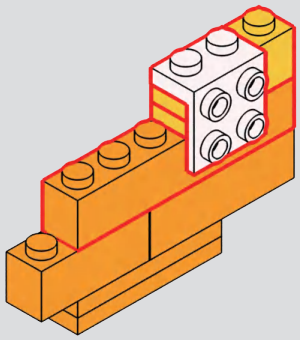

82

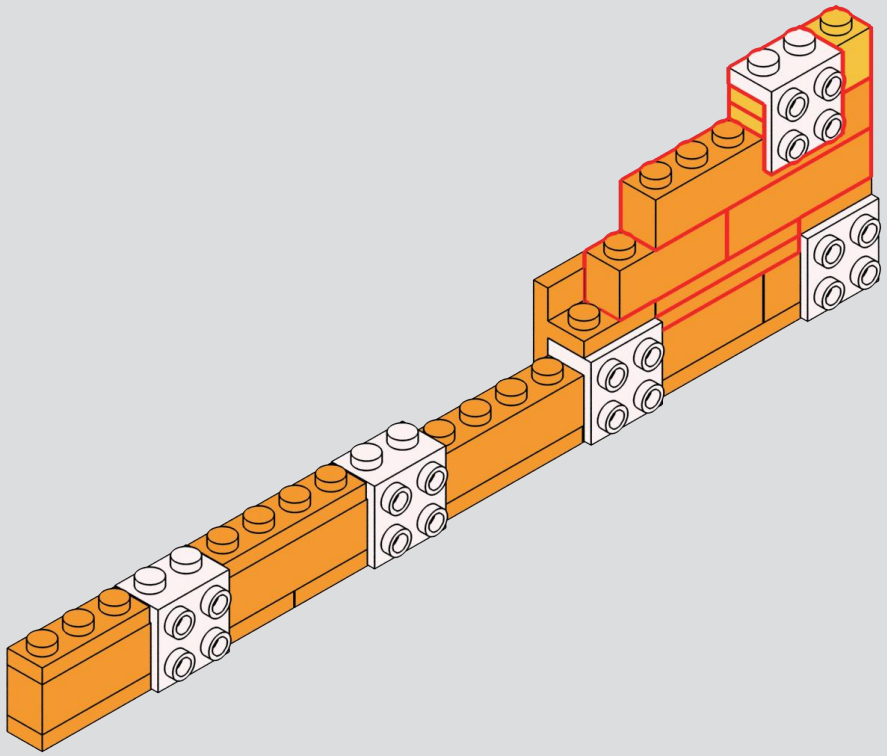

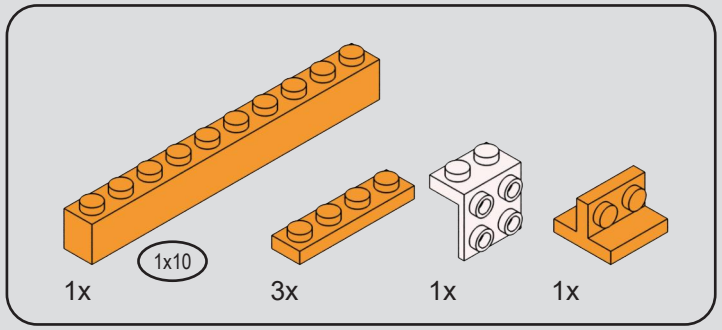

83

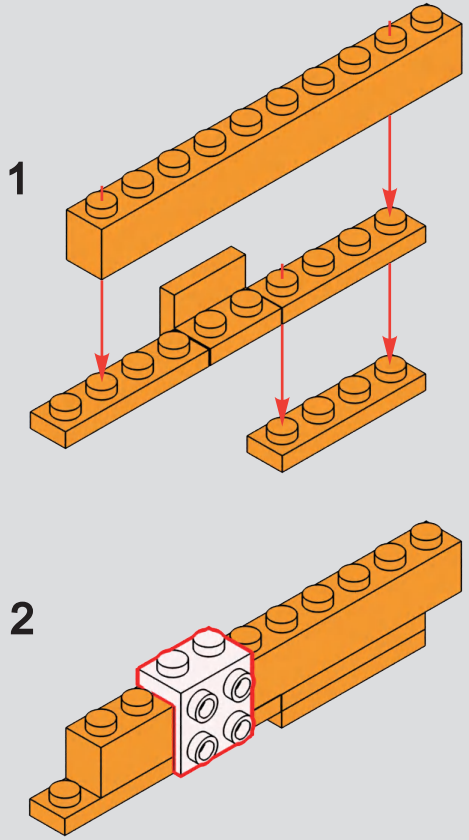

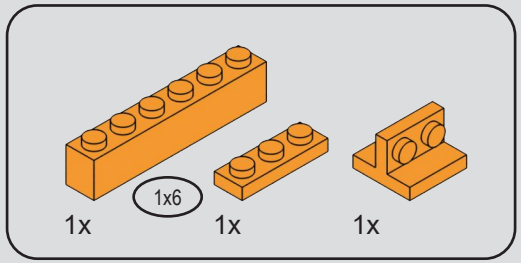

84

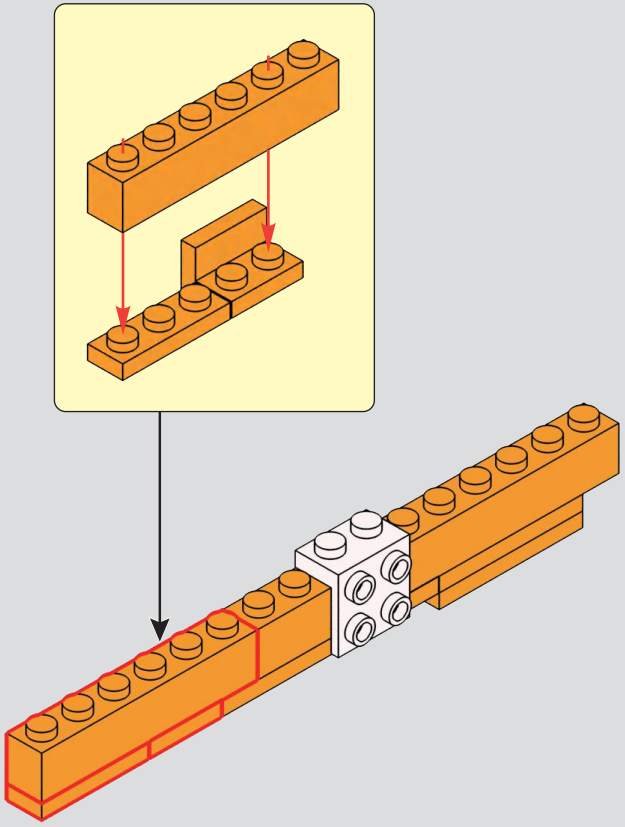

85

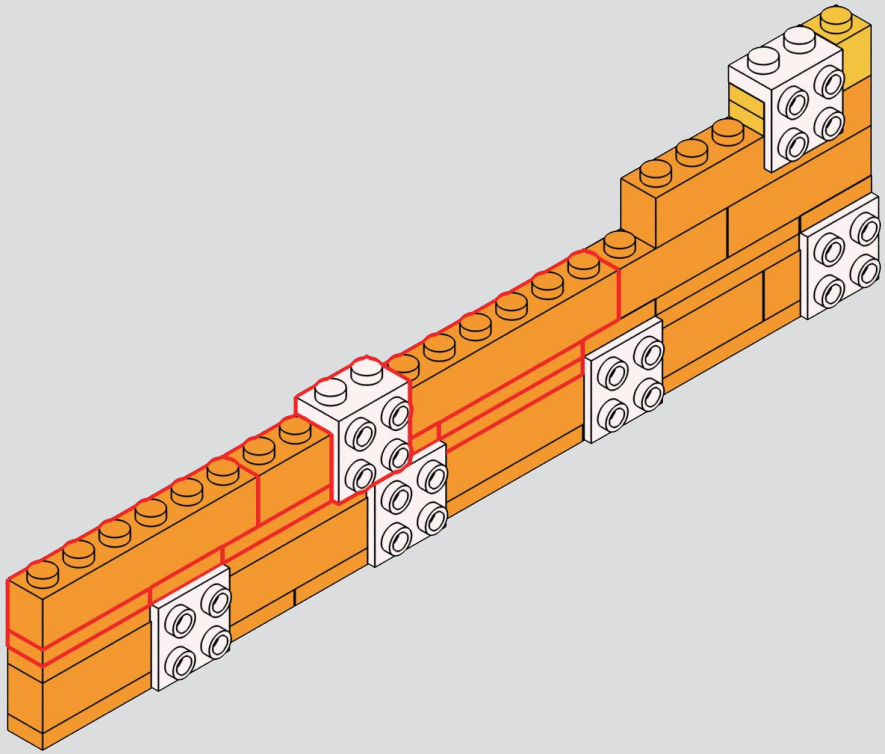

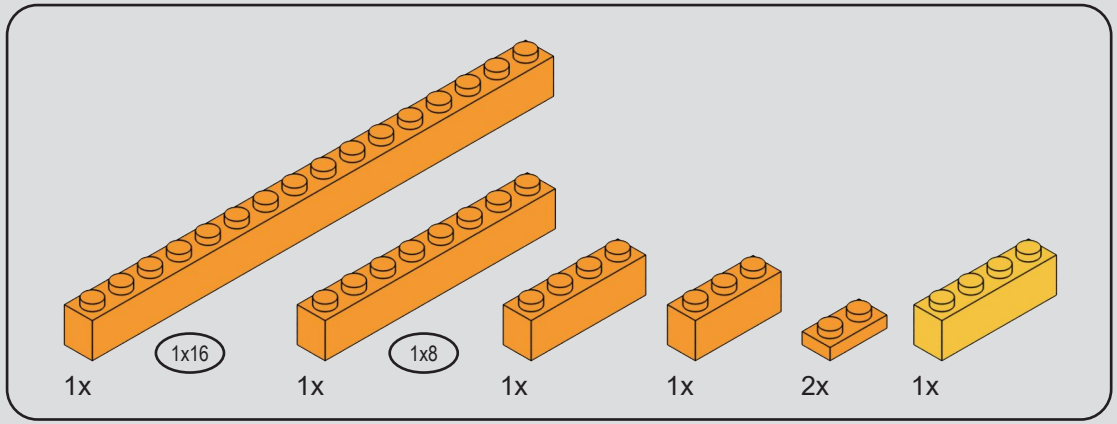

86

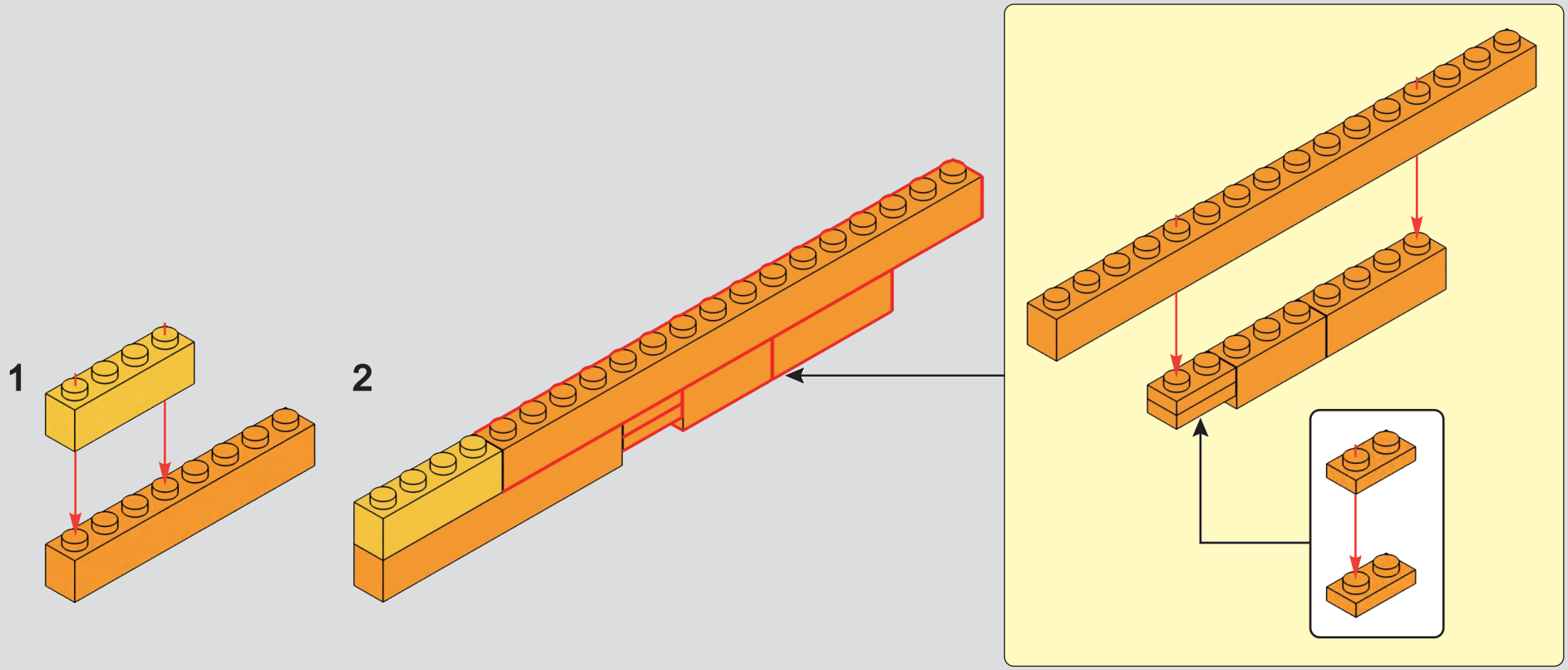

87

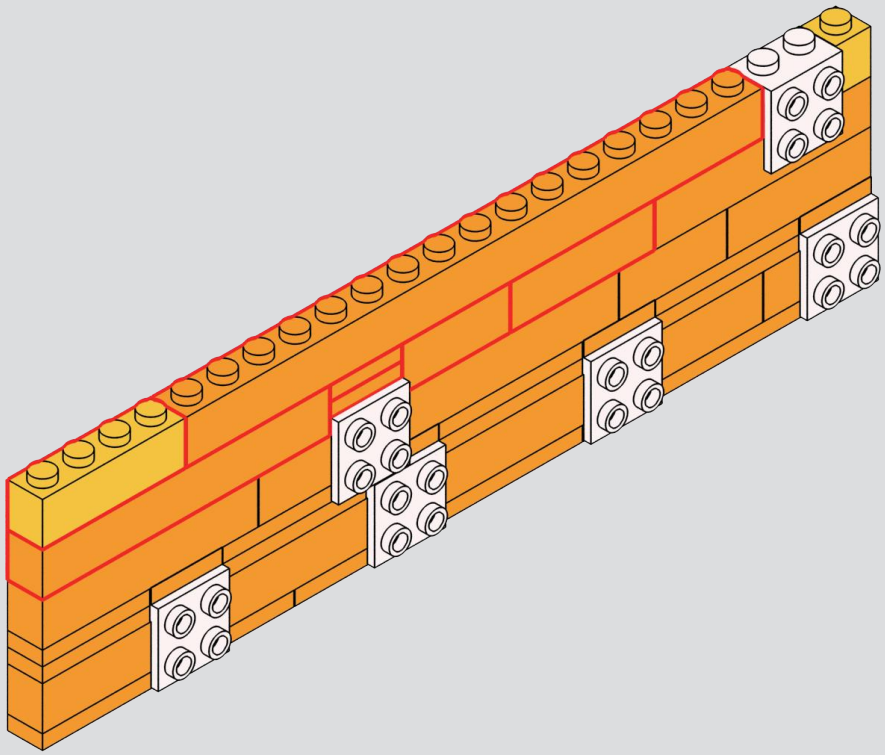

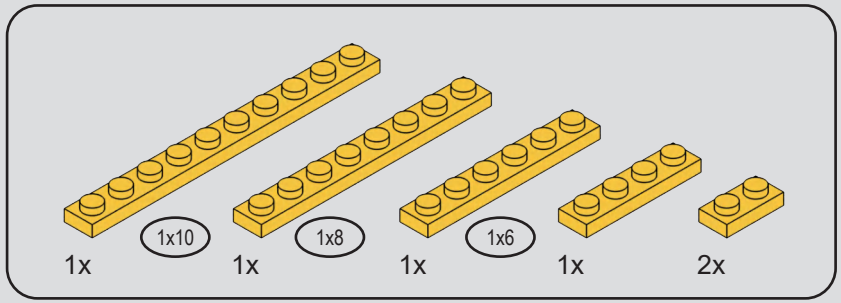

88

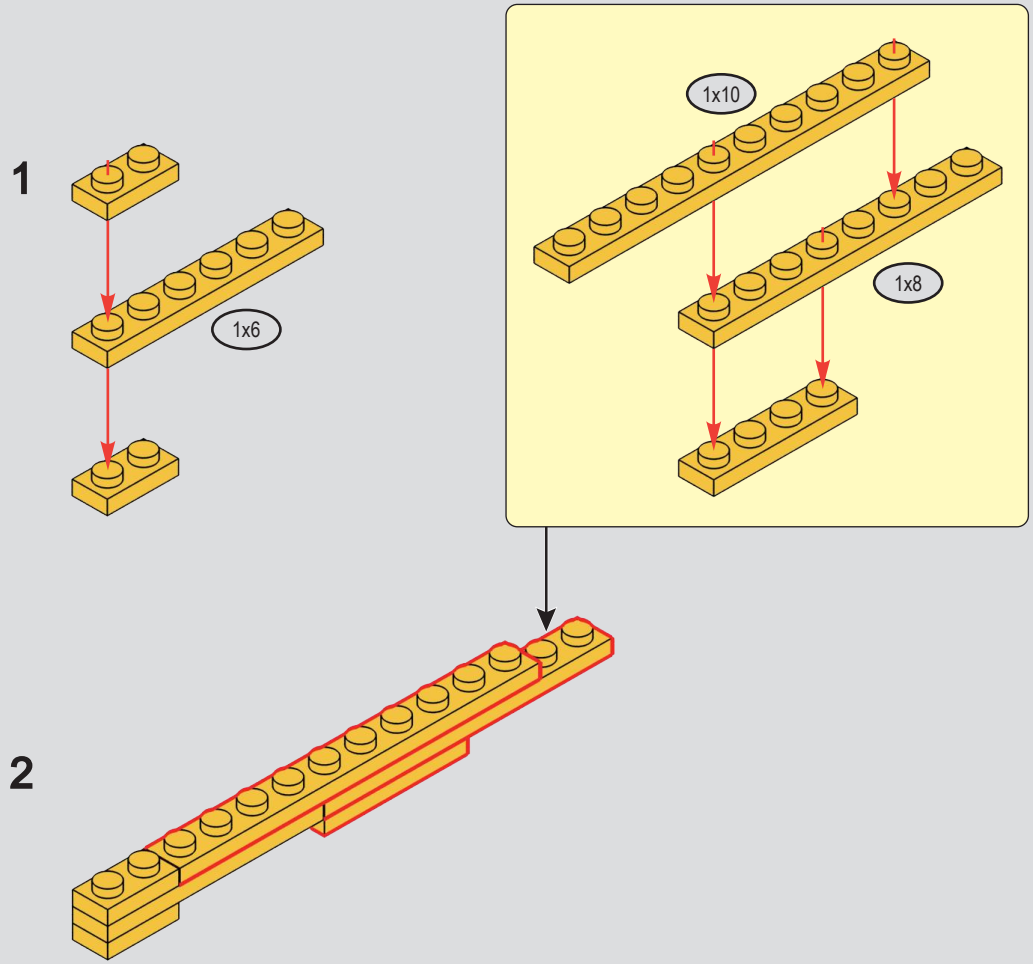

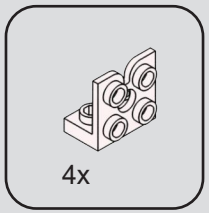

89

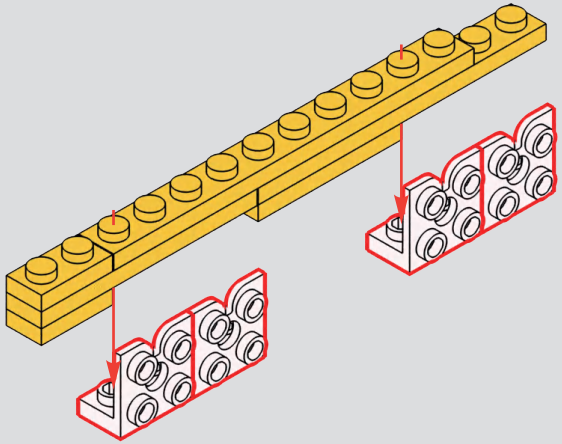

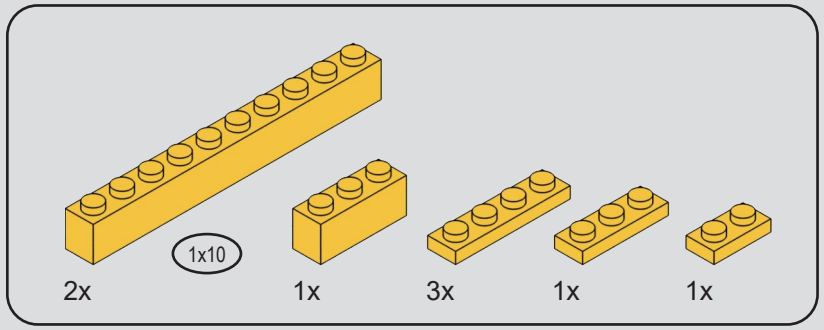

90

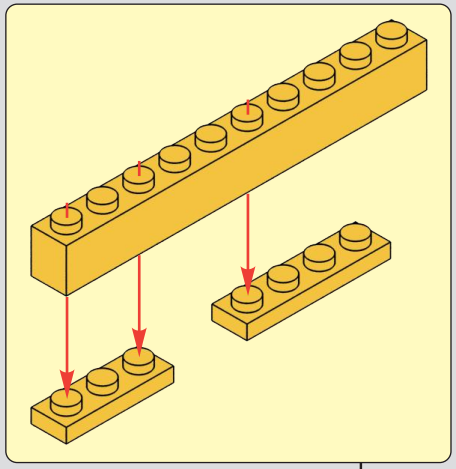

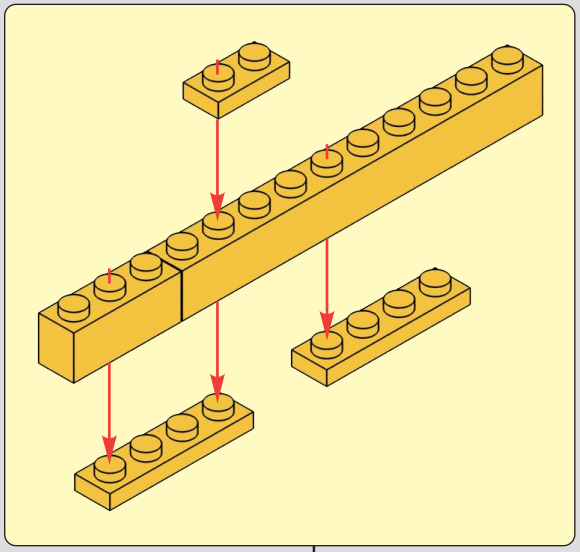

1

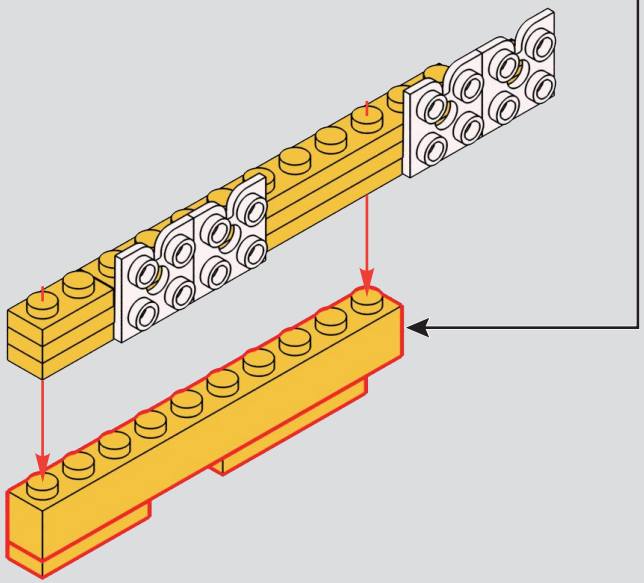

2

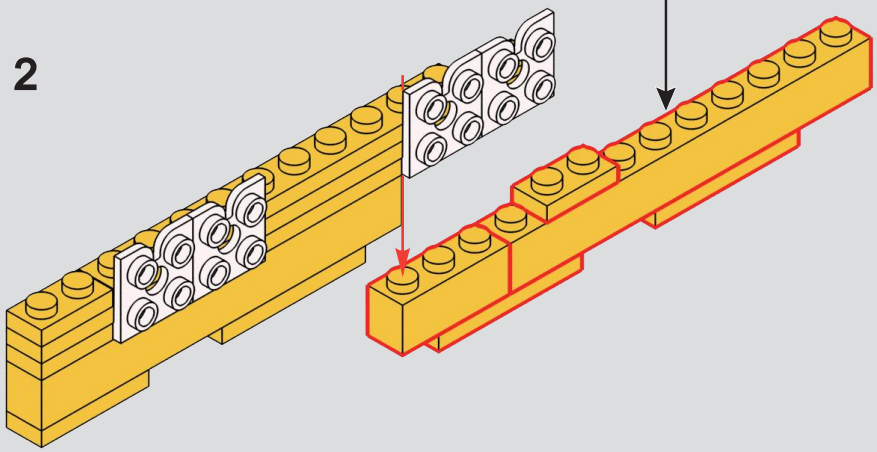

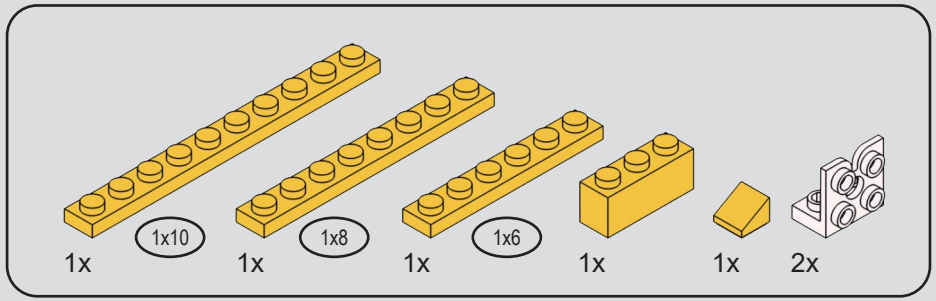

91

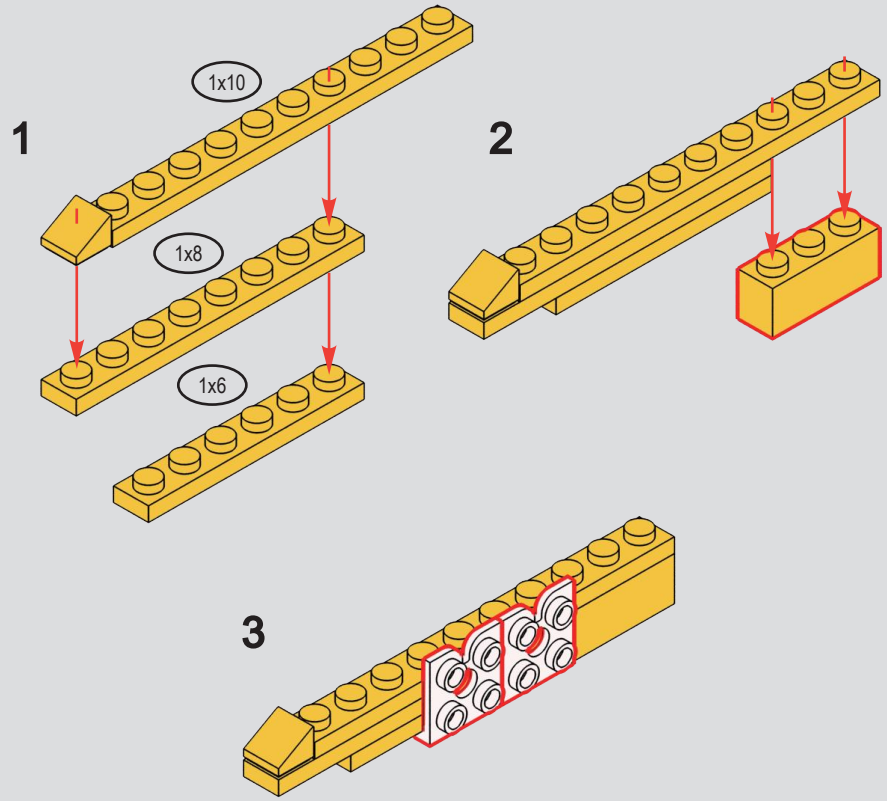

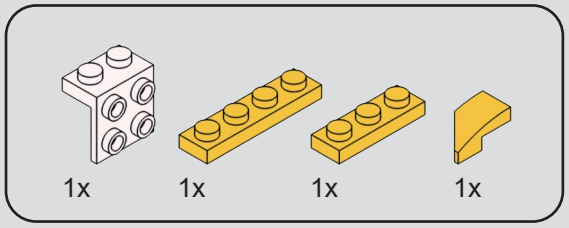

92

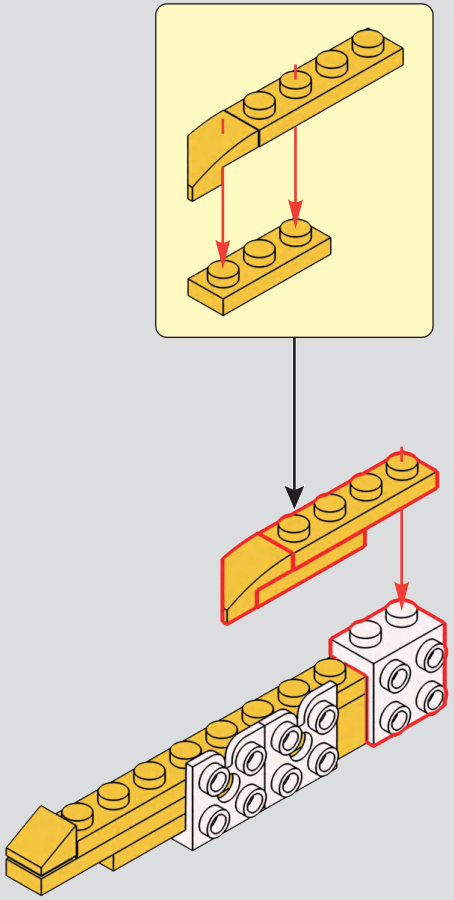

93

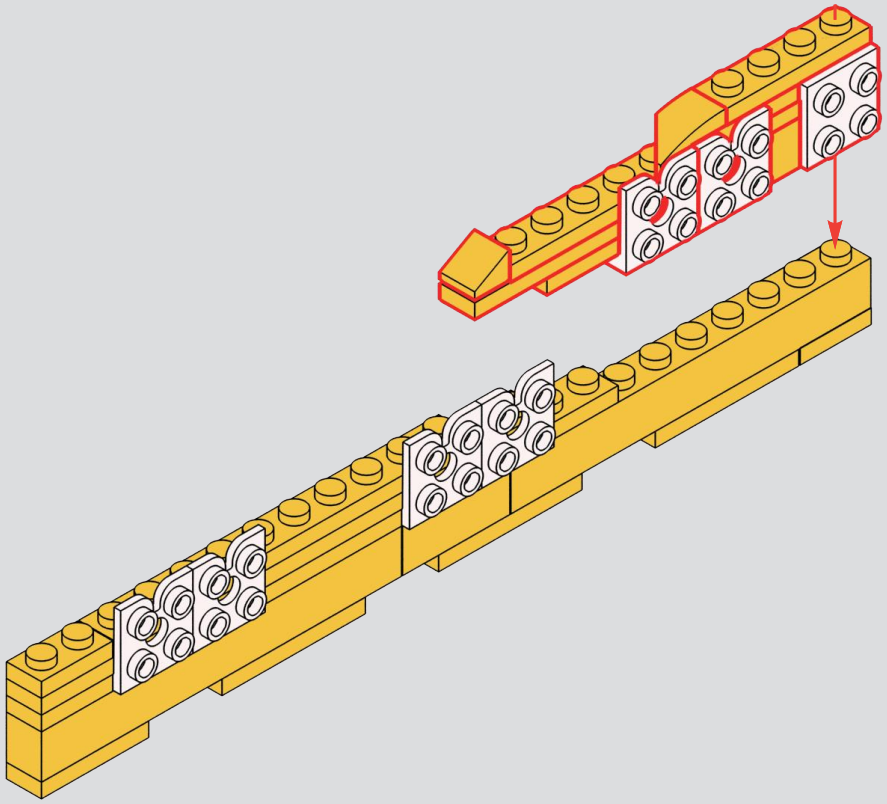

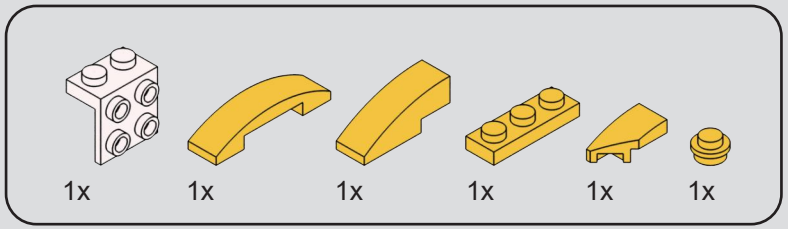

94

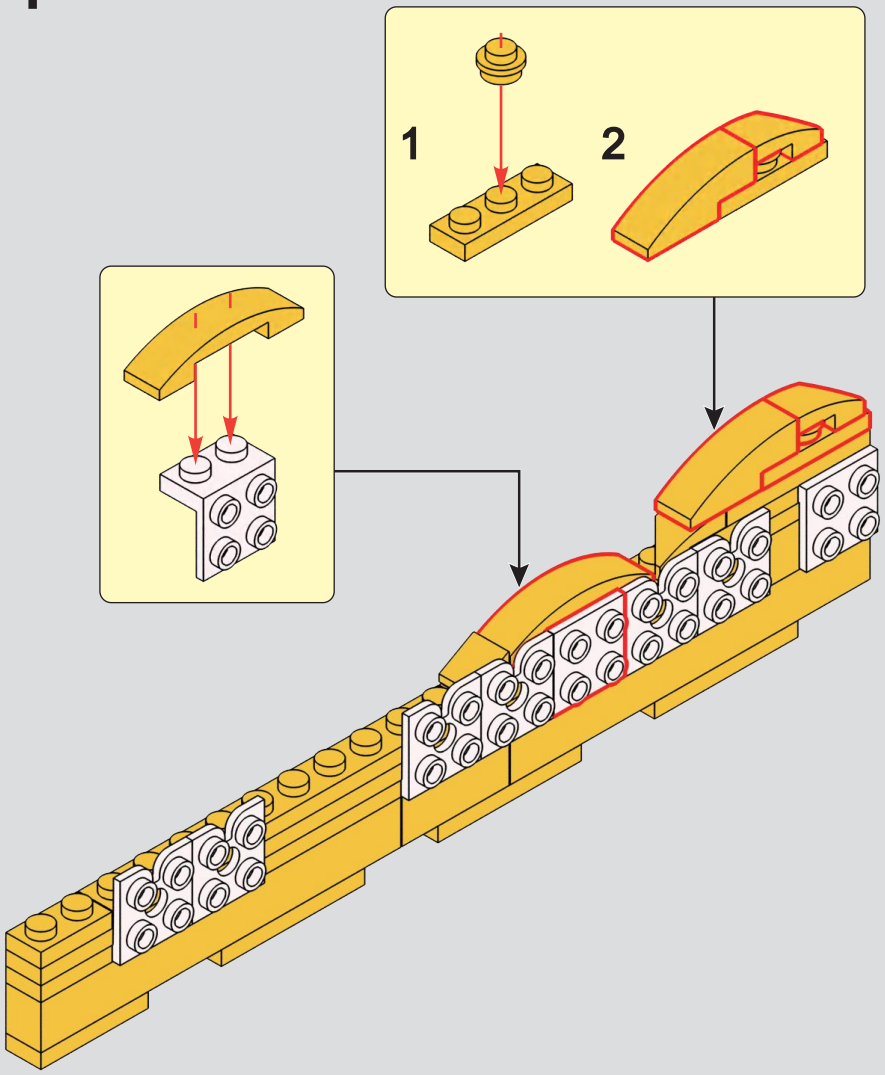

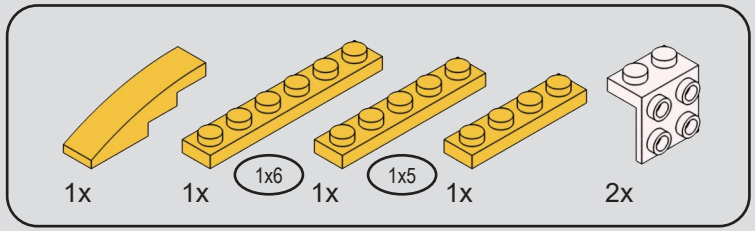

95

1

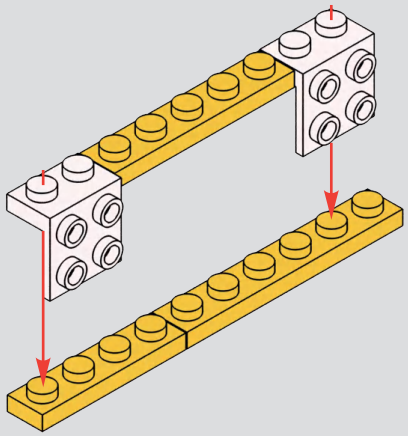

2

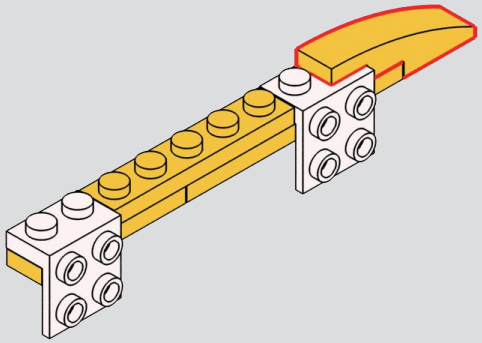

96

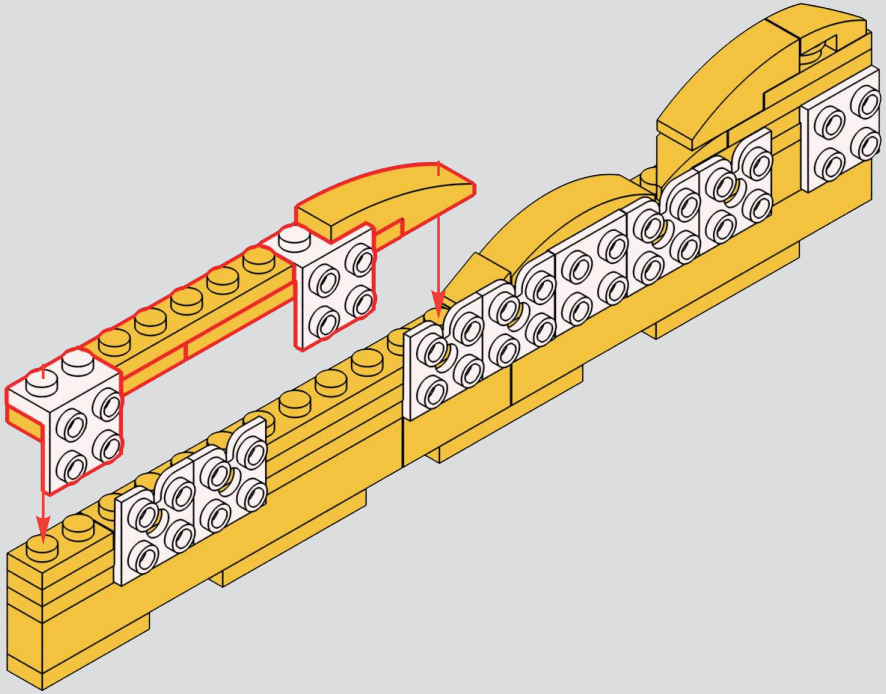

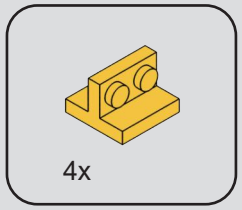

97

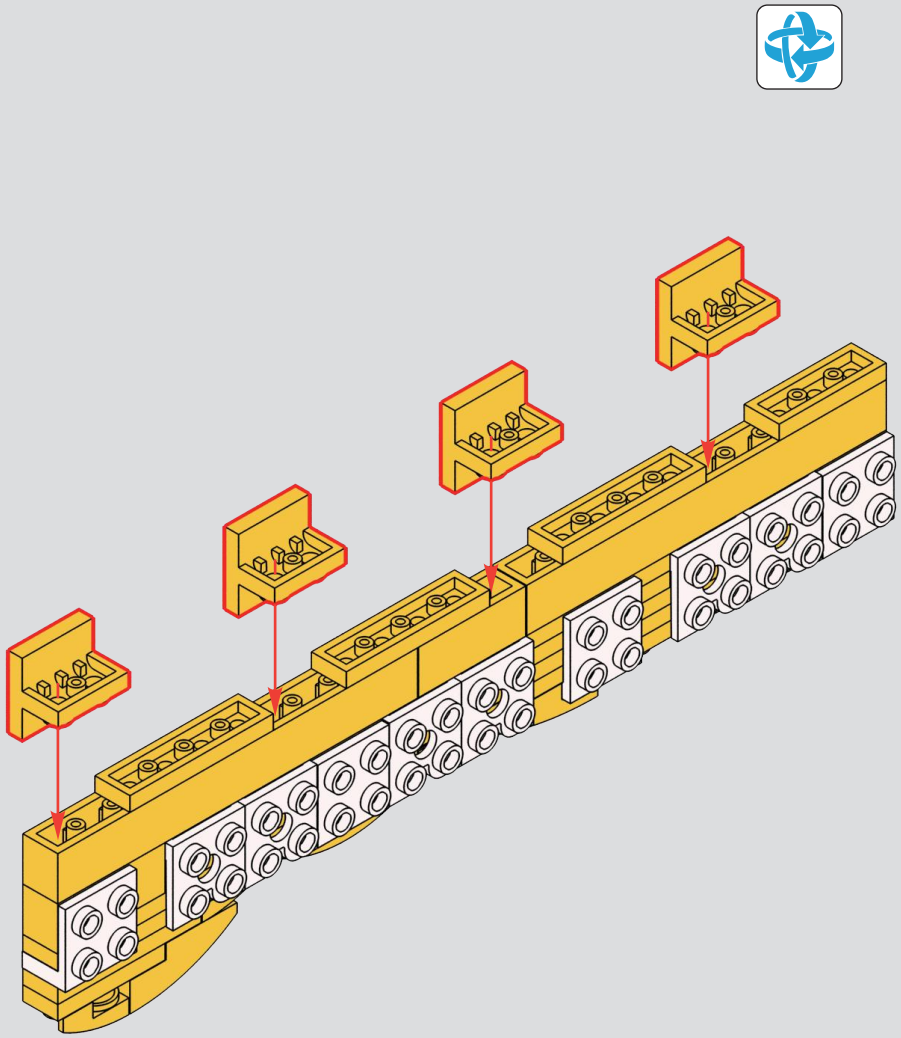

98

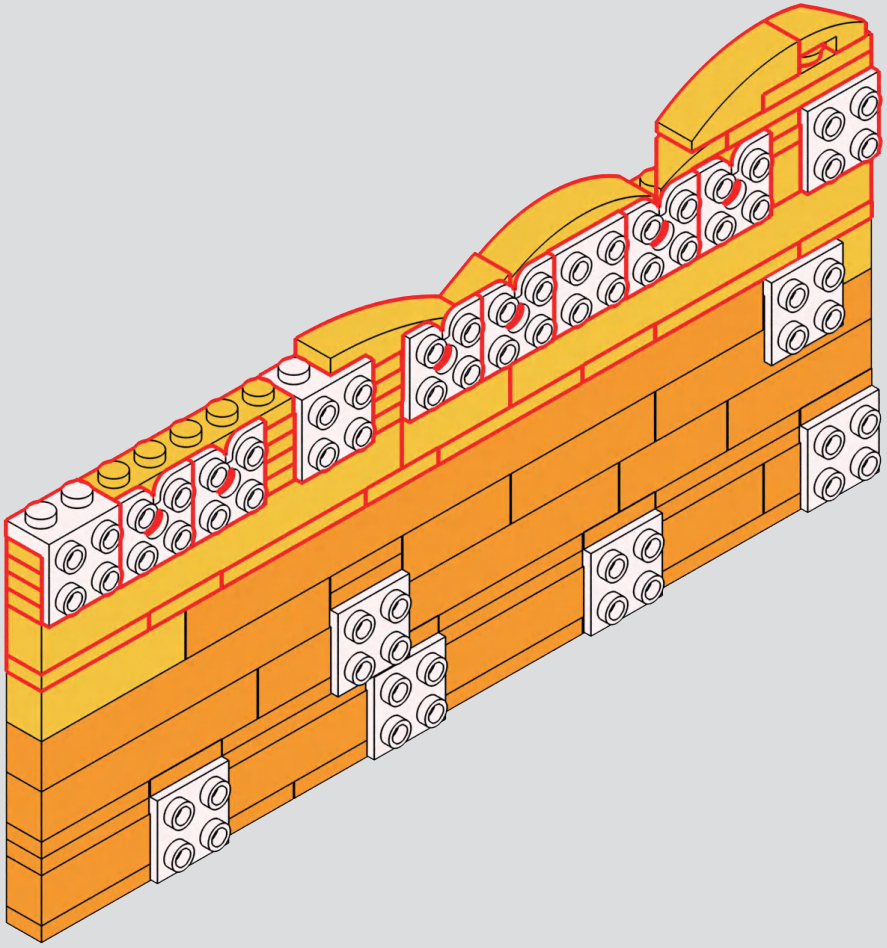

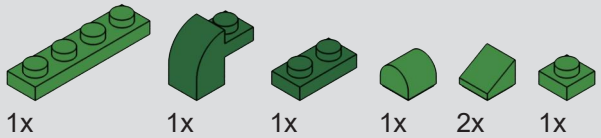

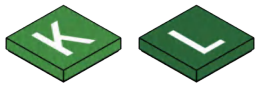

Check the color.
核对颜色。

99

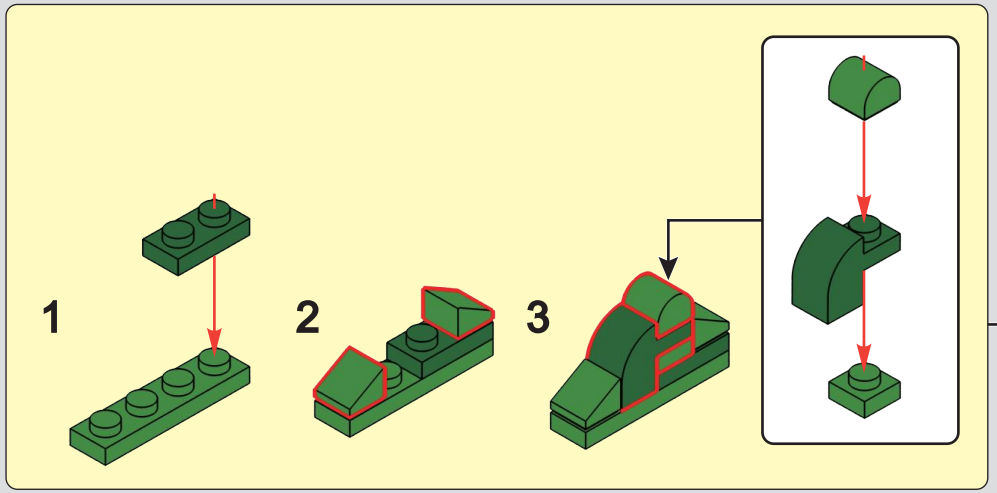

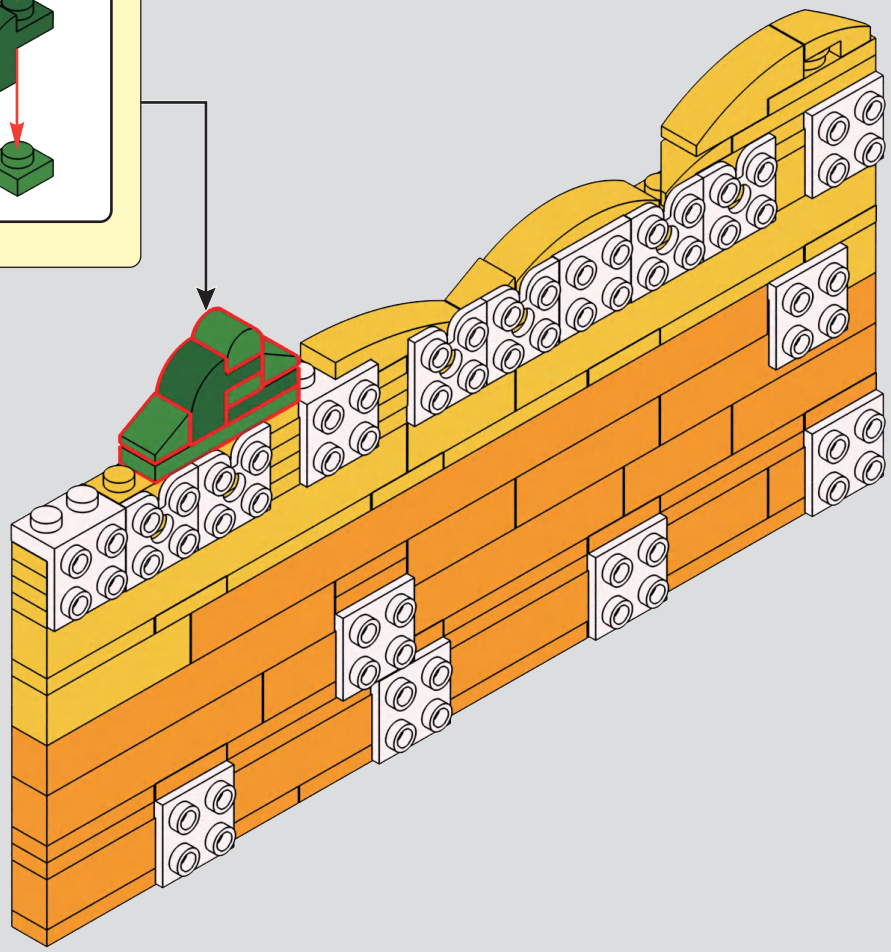

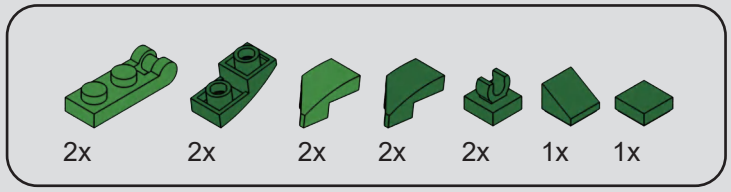

100

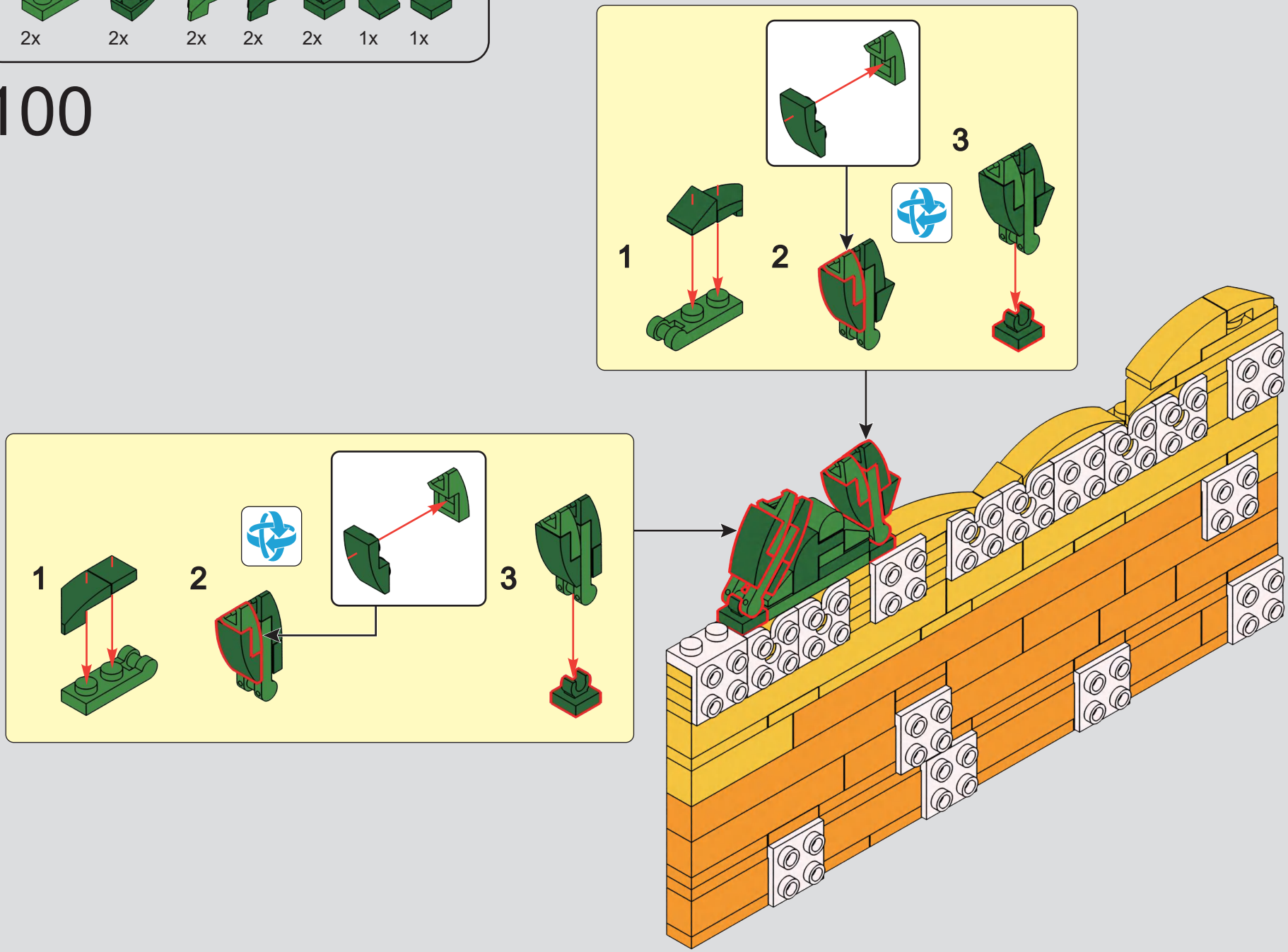

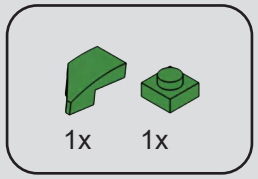

101

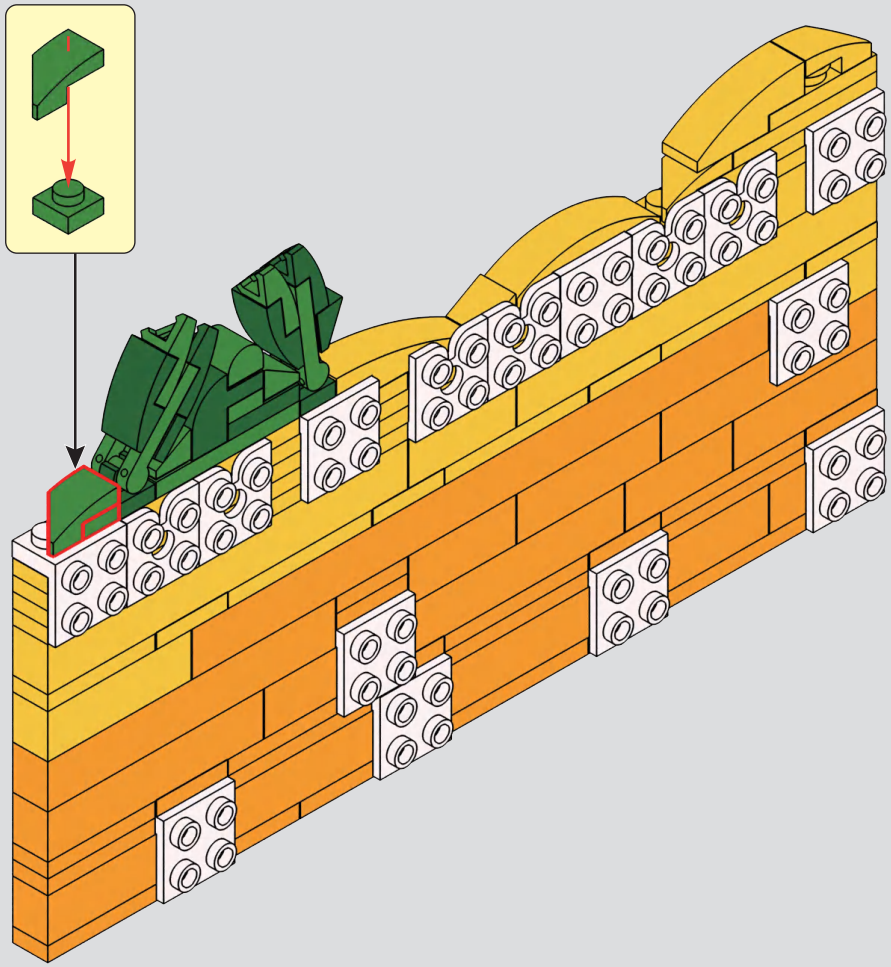

102

1

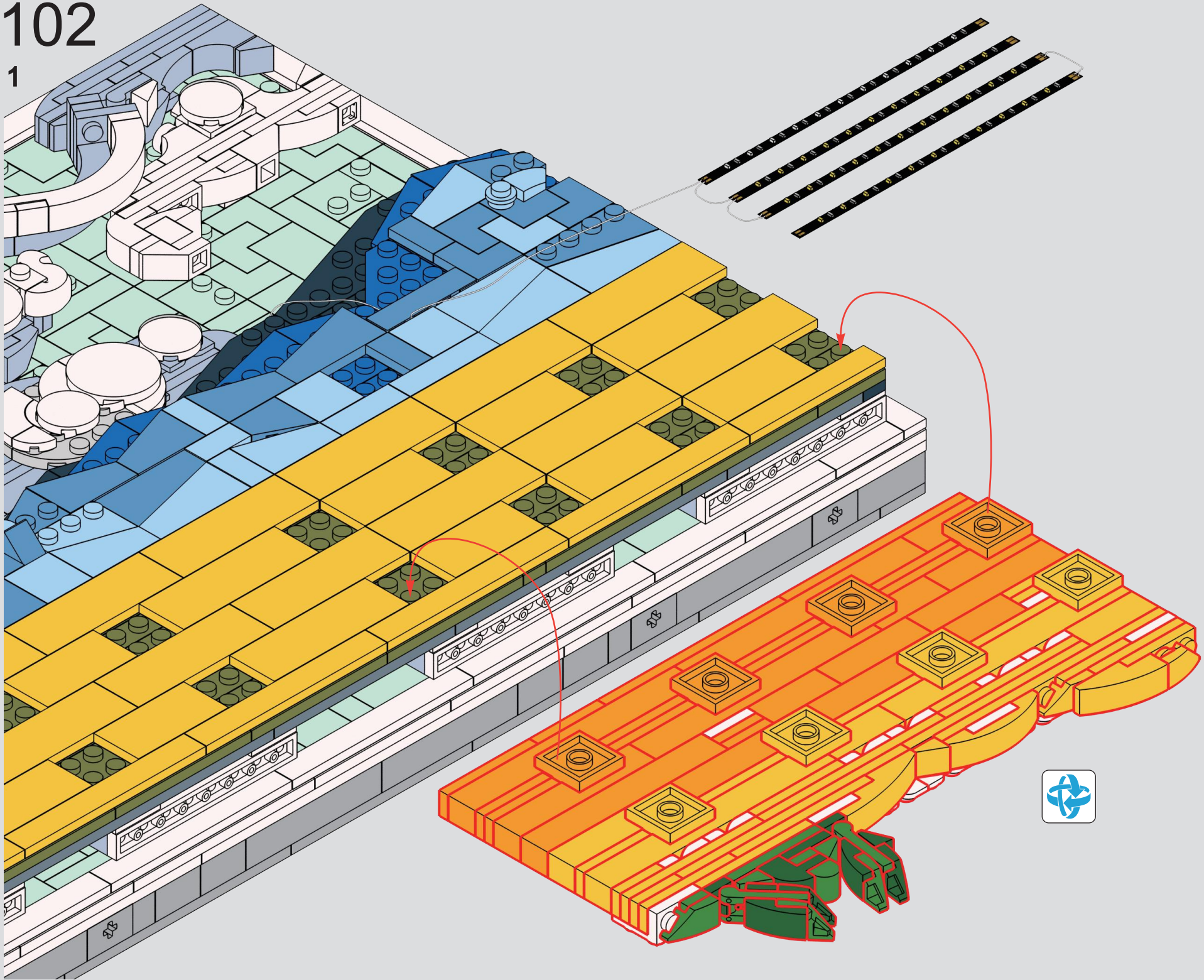

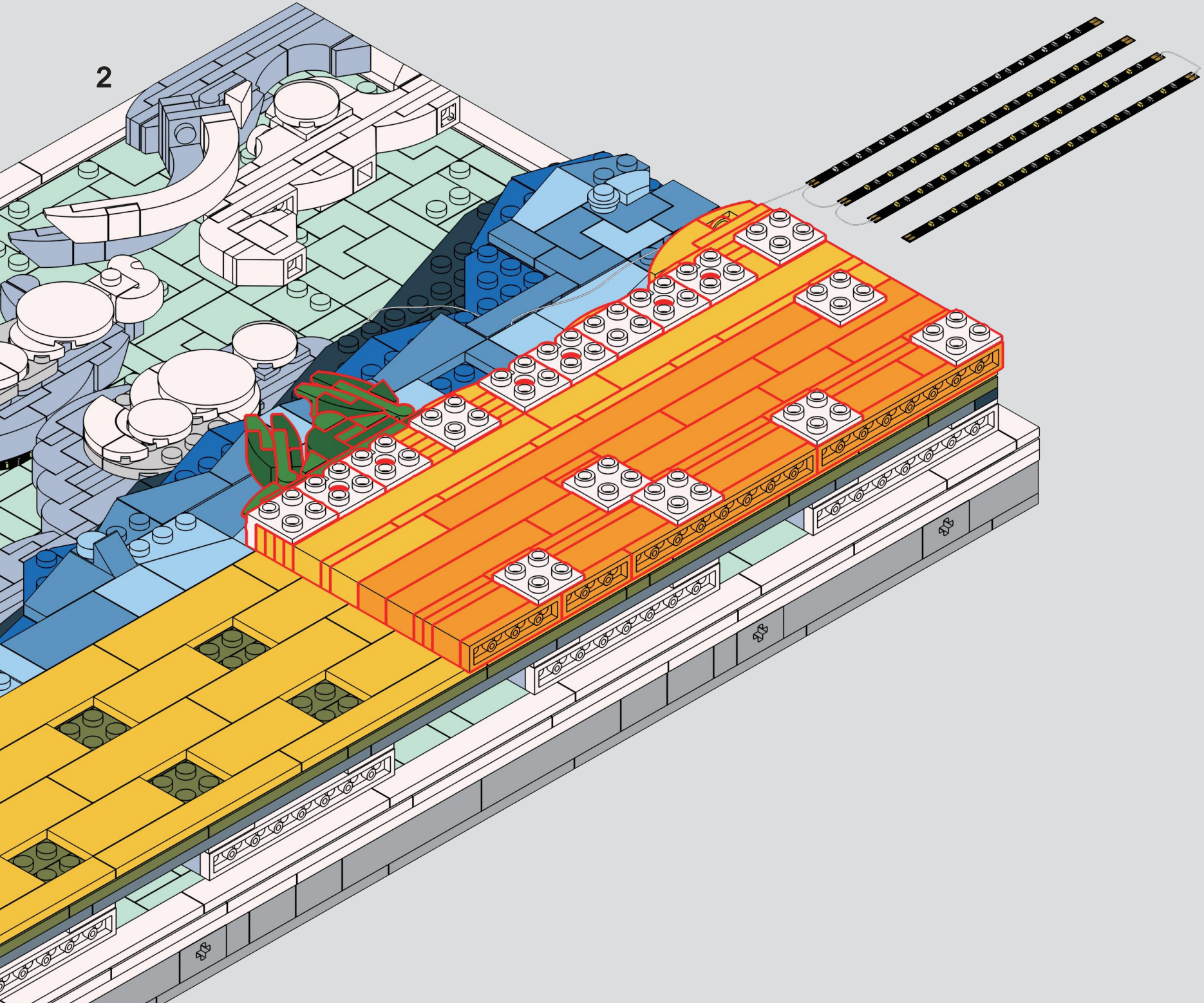
2

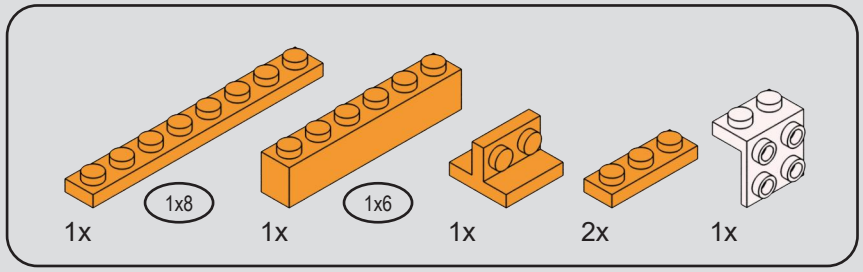

103

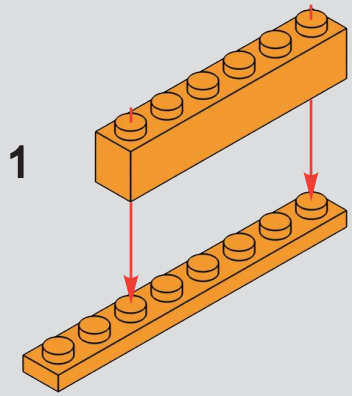

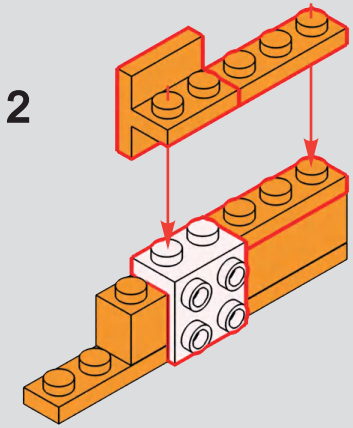

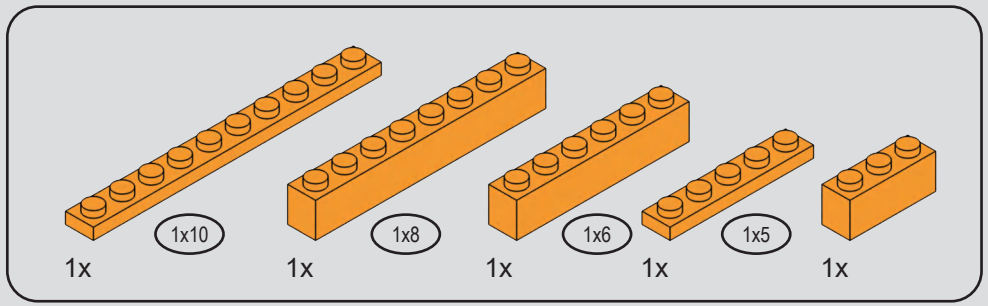

104

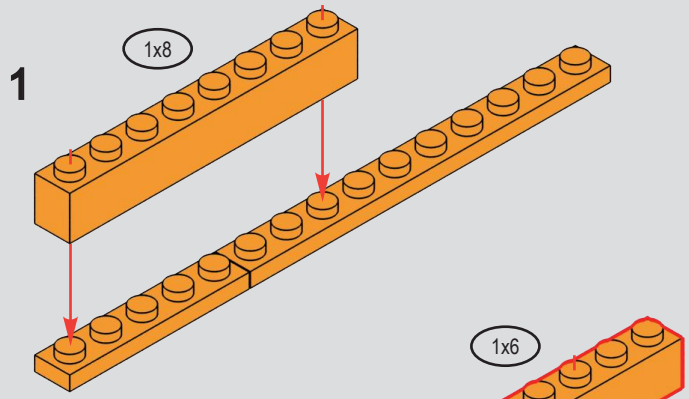

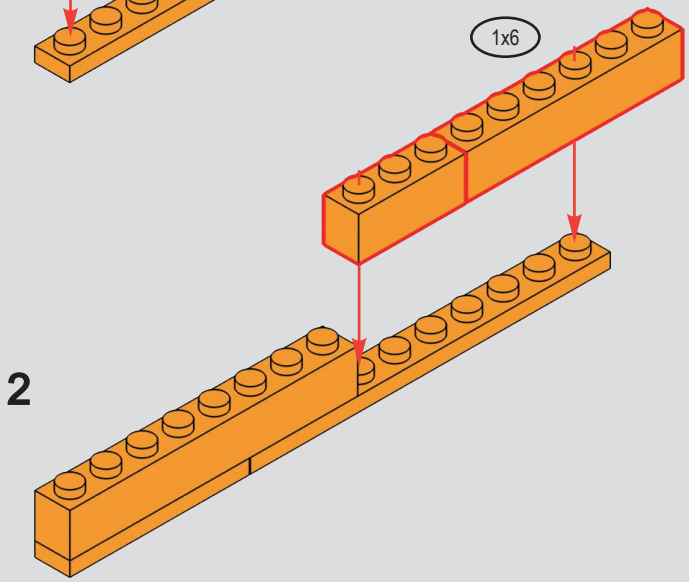

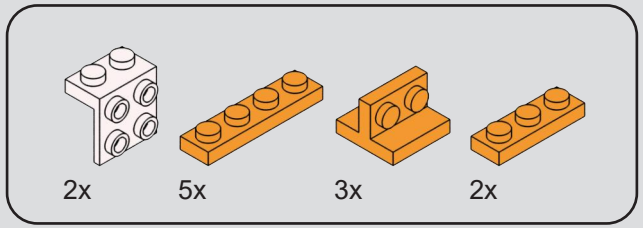

105

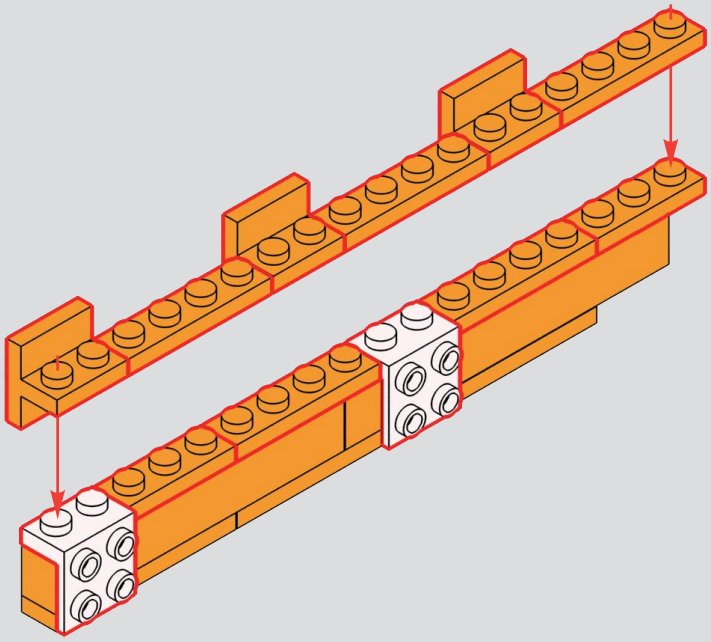

106

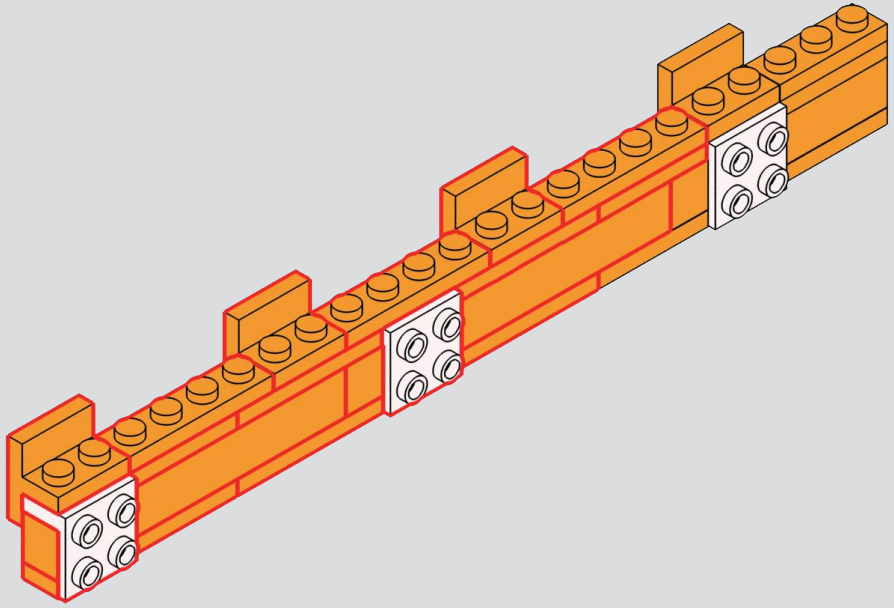

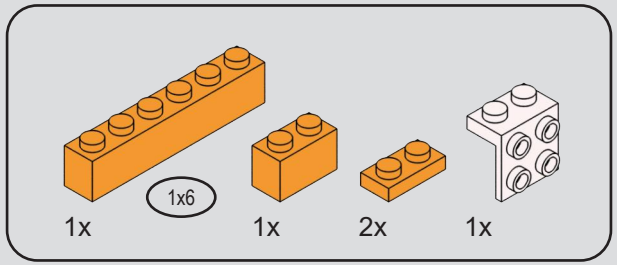

107

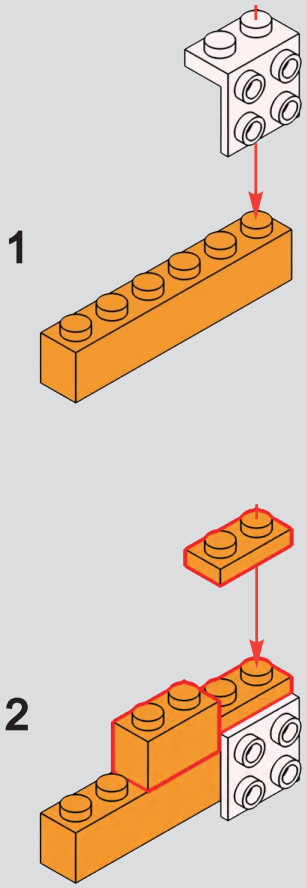

108

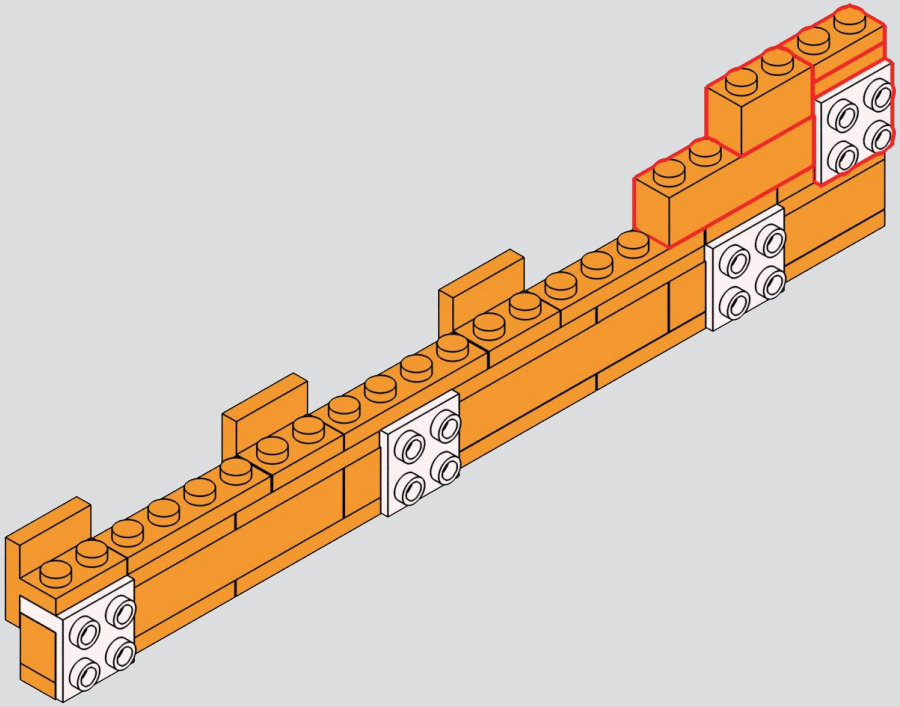

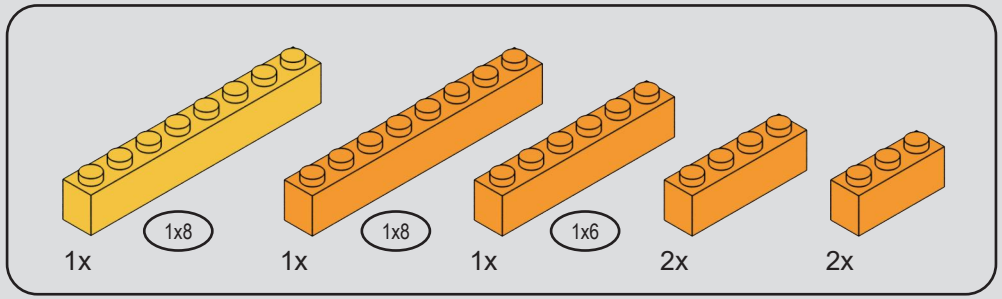

109

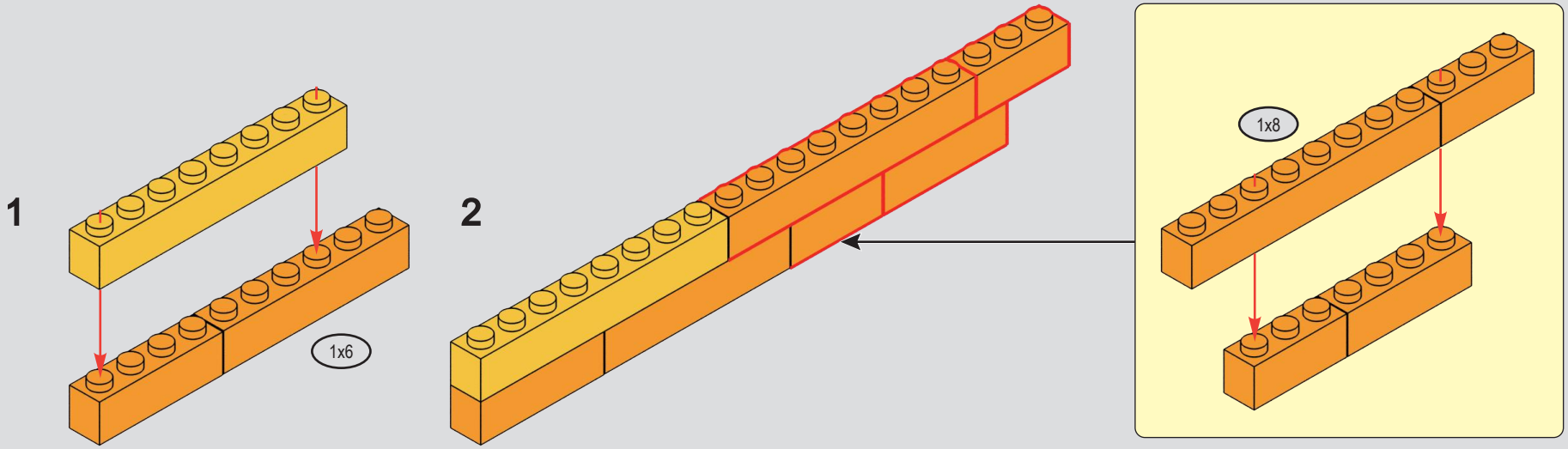

110

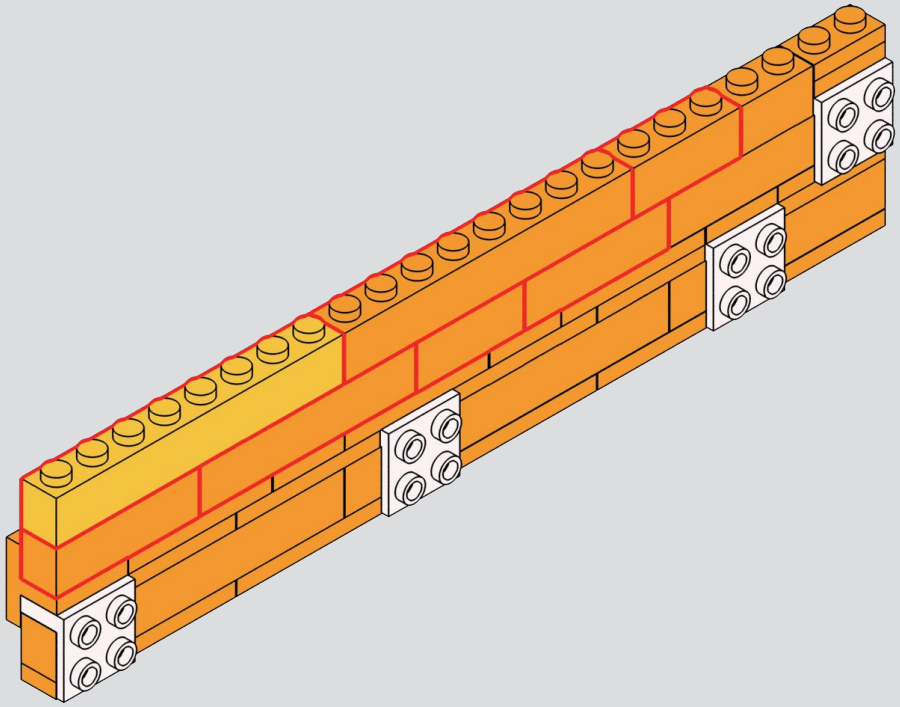

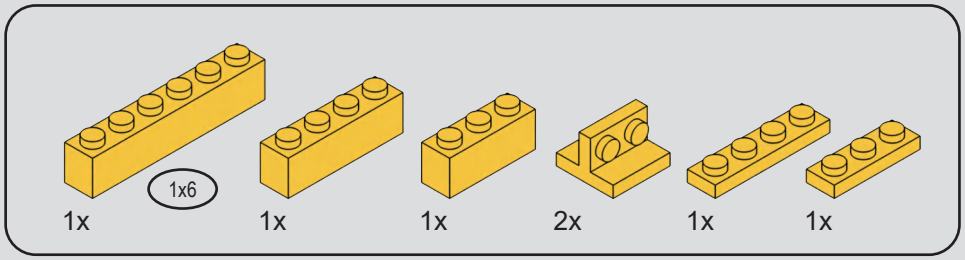

111

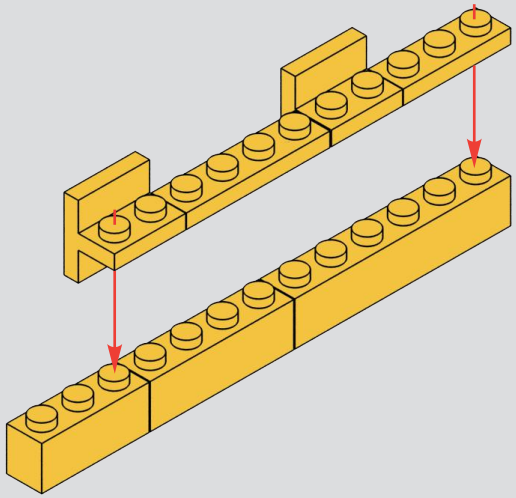

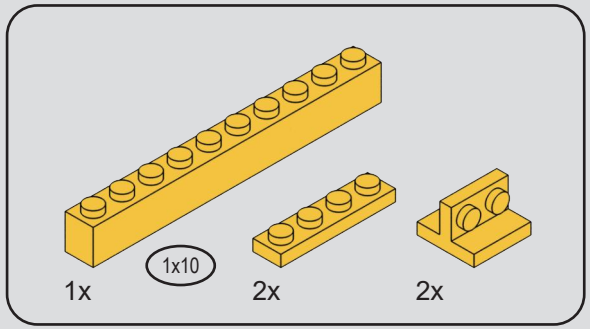

112

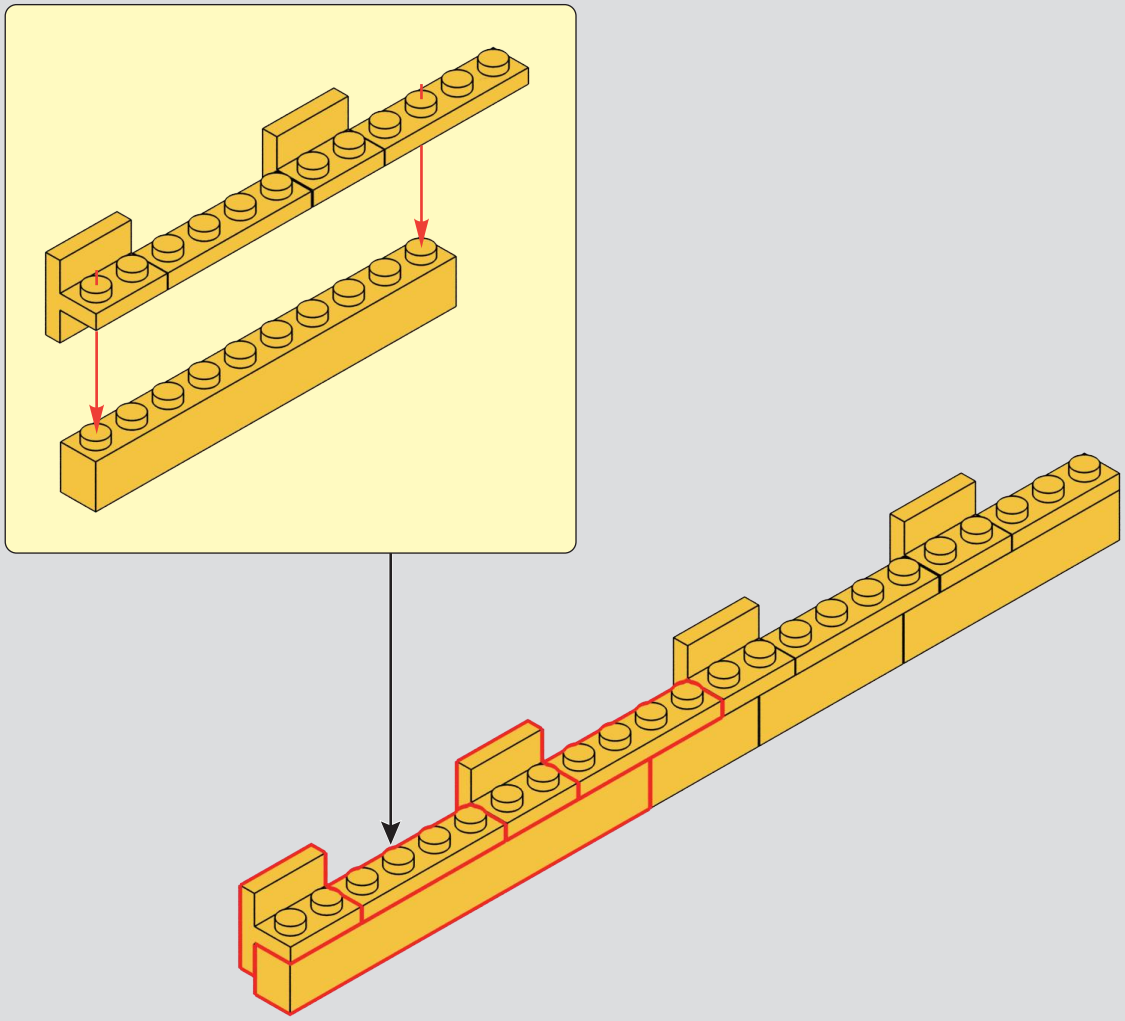

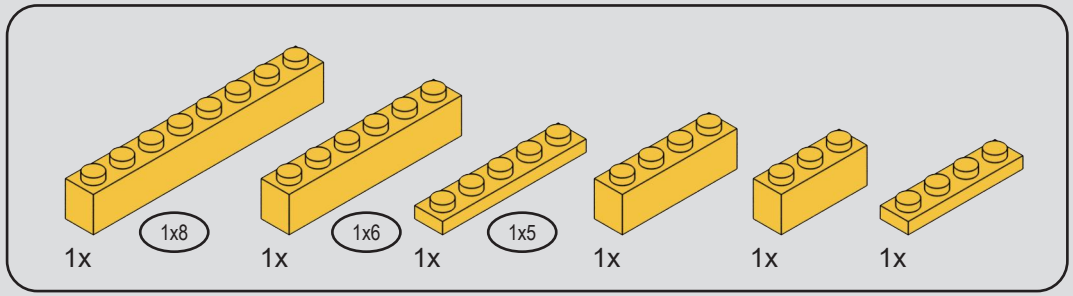

113

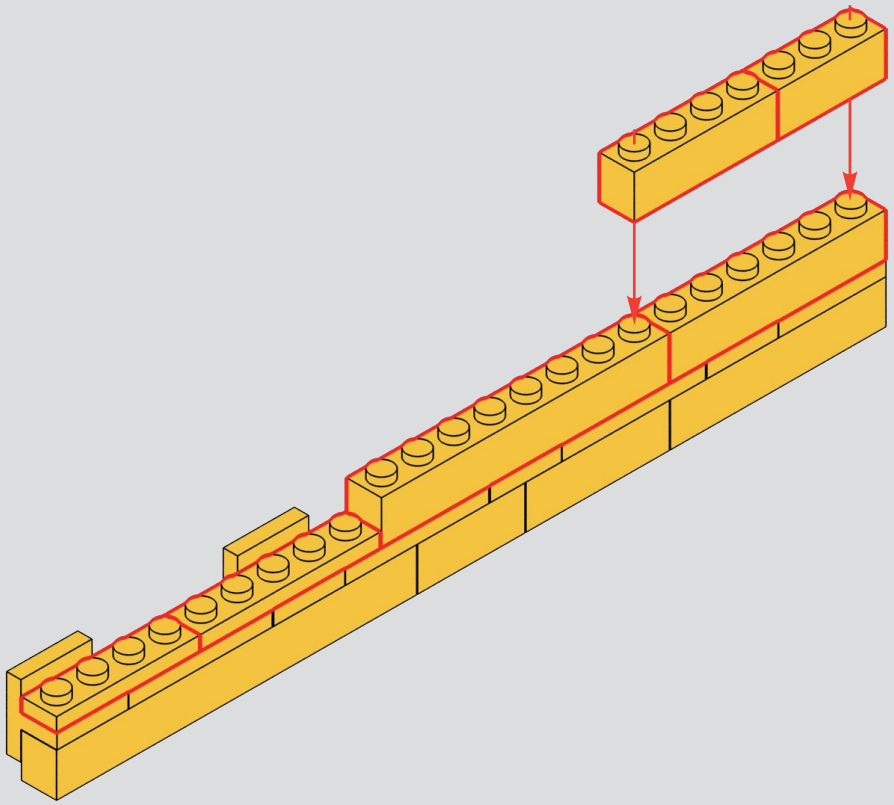

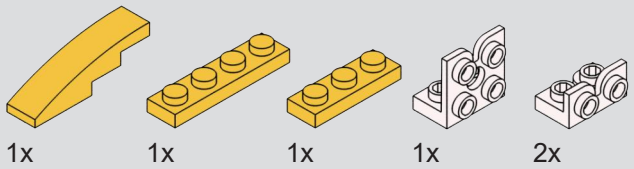

114

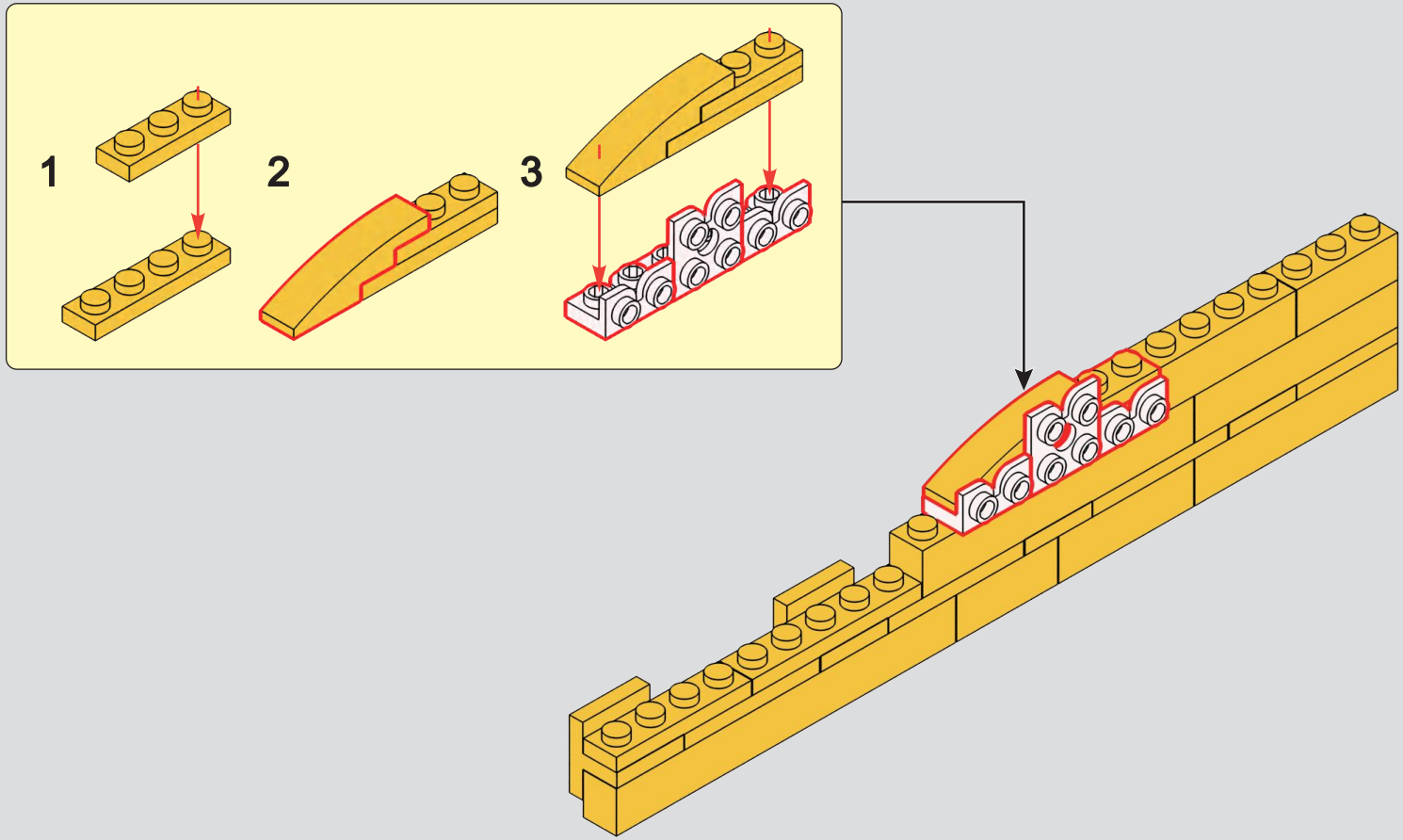

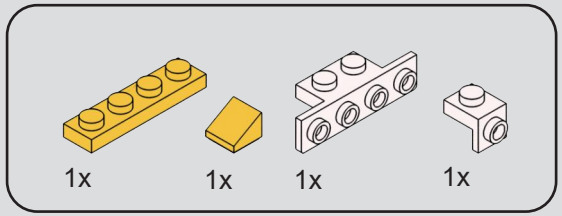

115

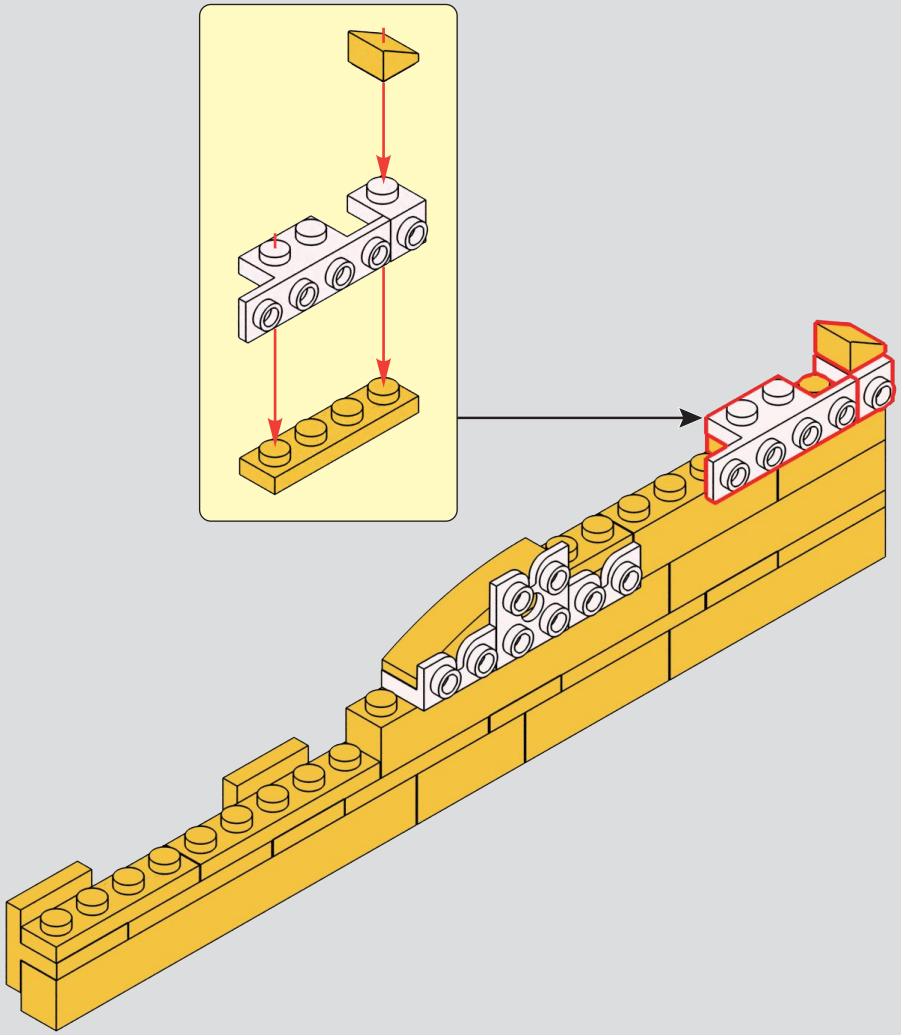

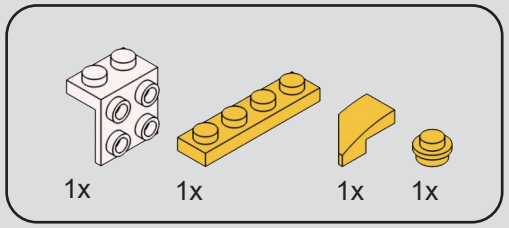

116

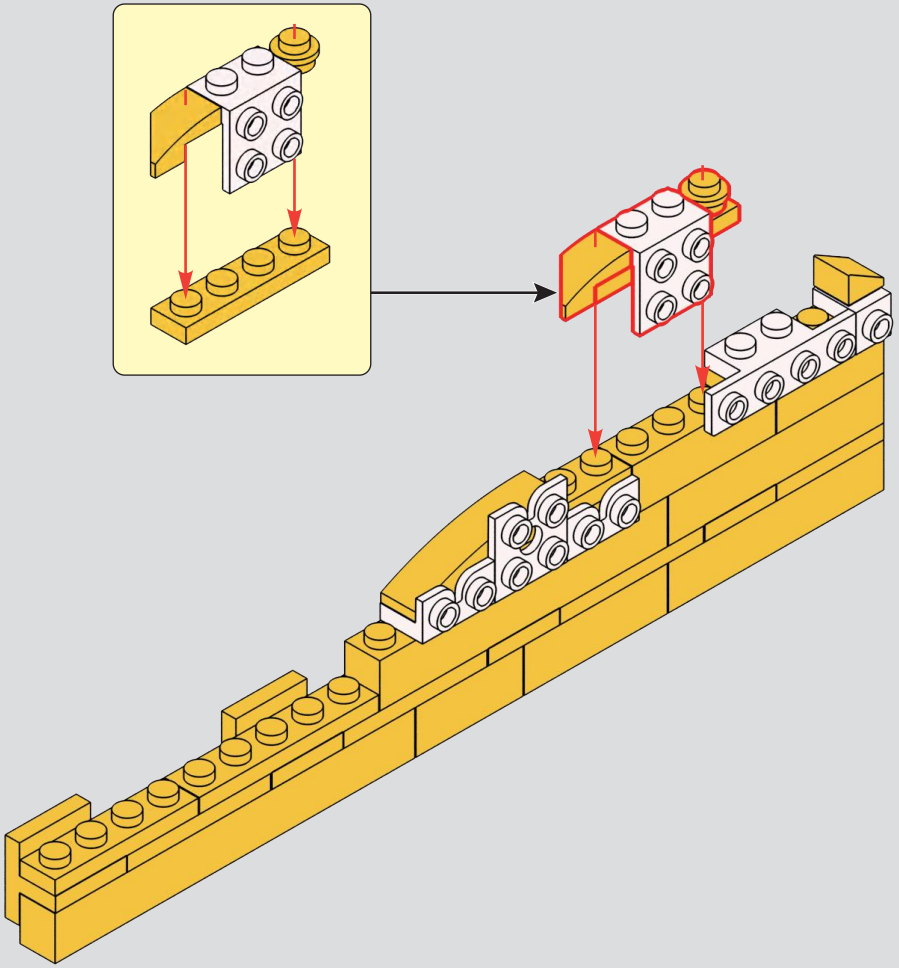

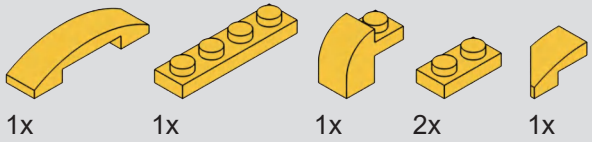

117

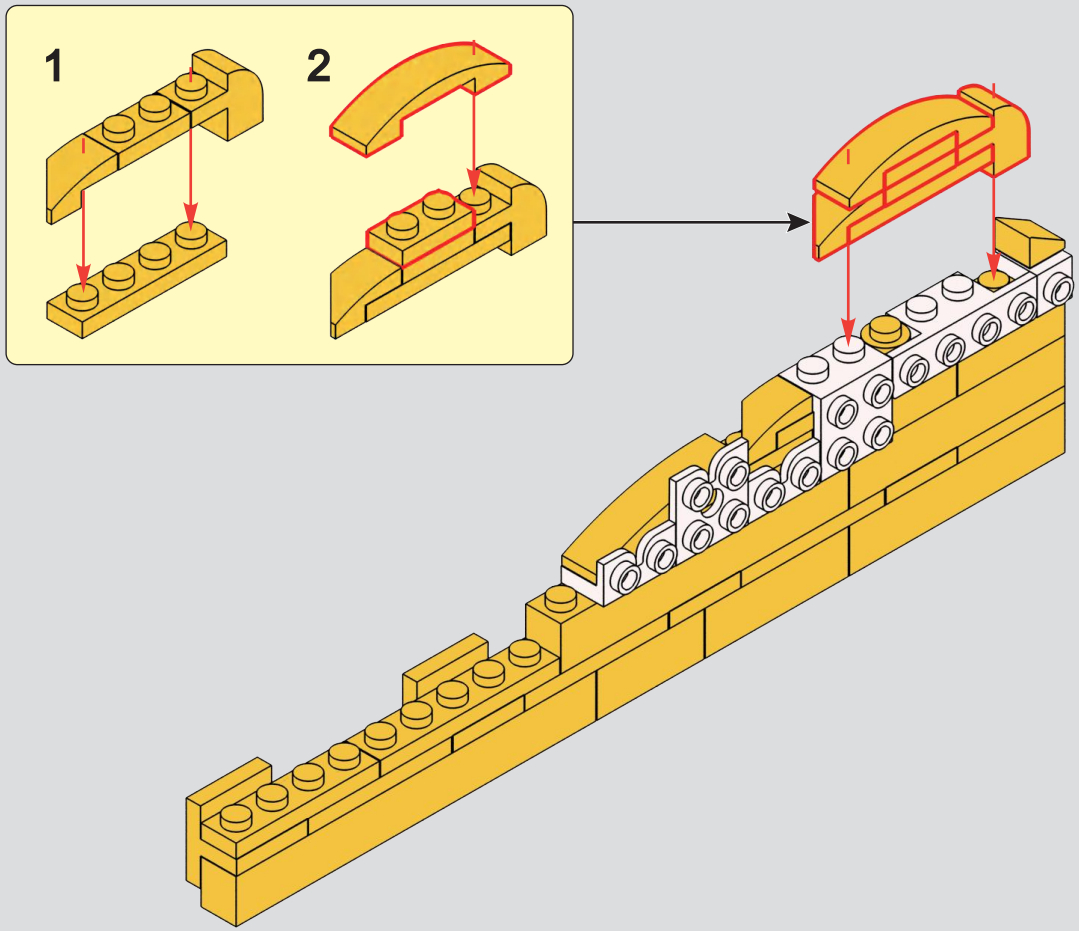

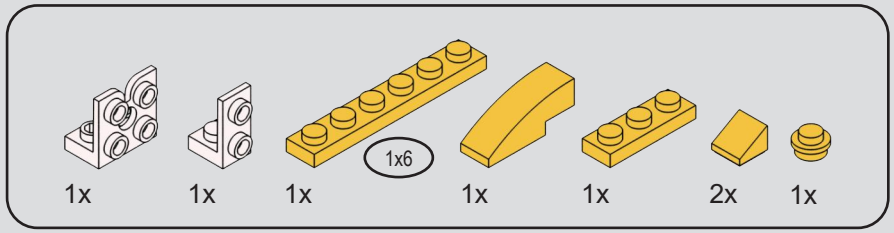

118

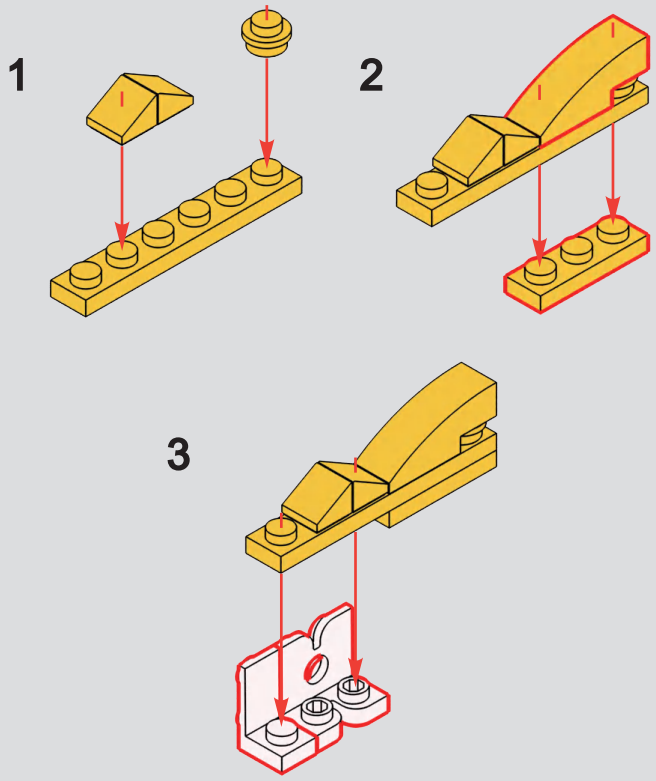

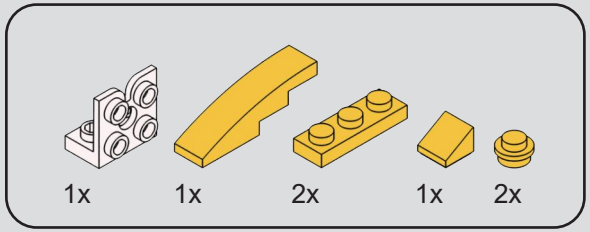

119

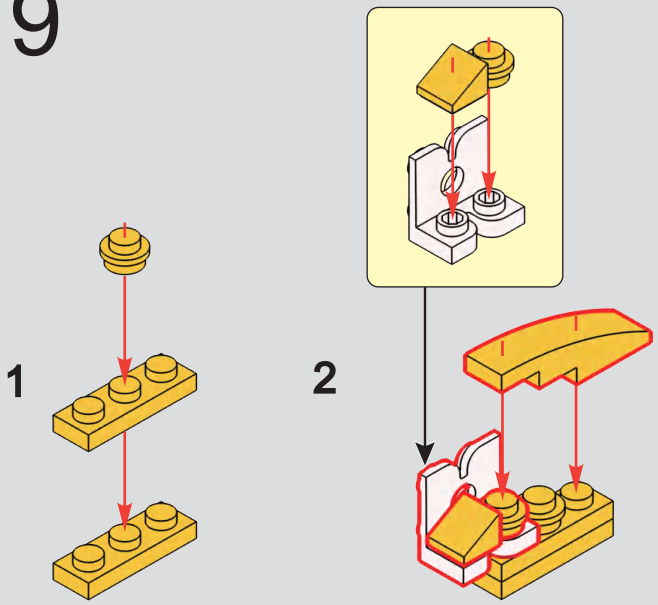

120

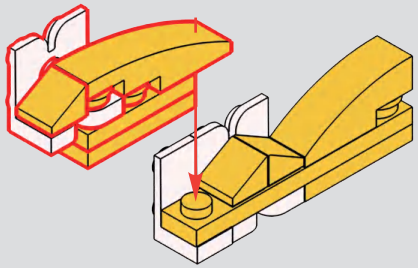

121

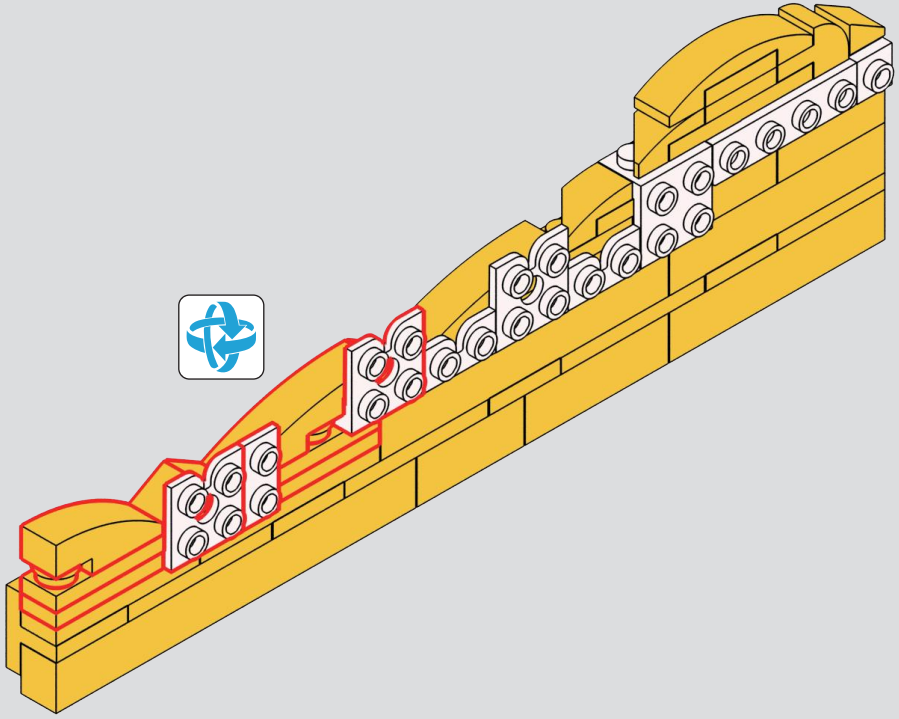

122

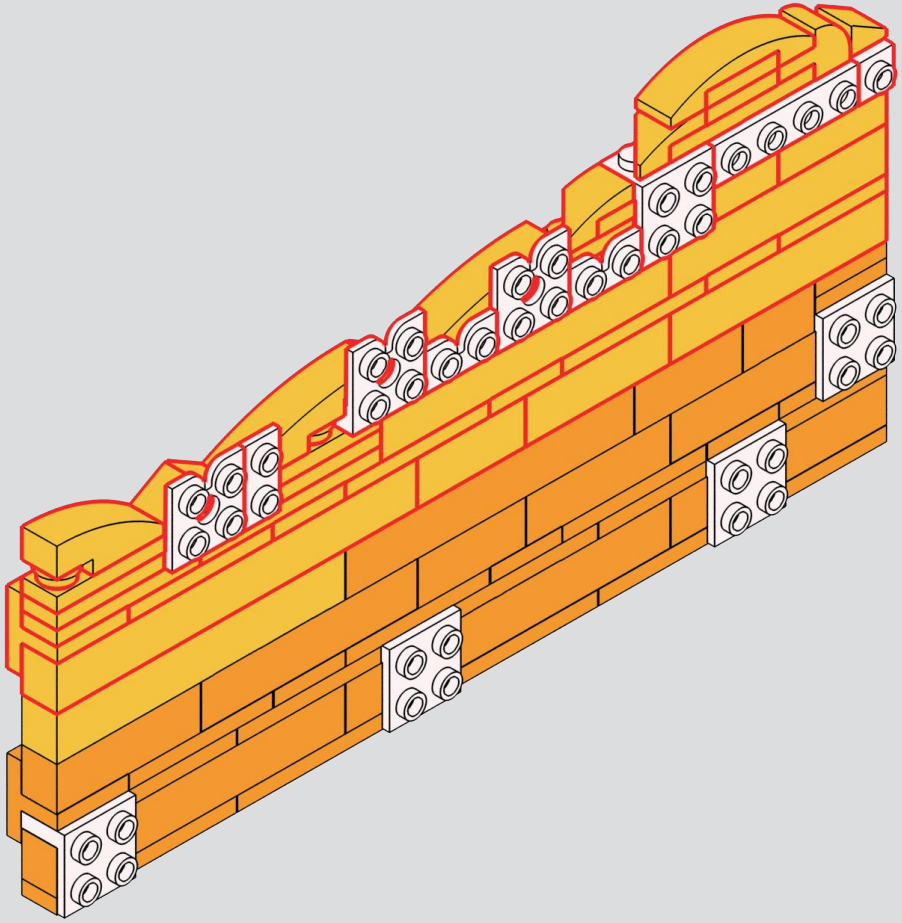

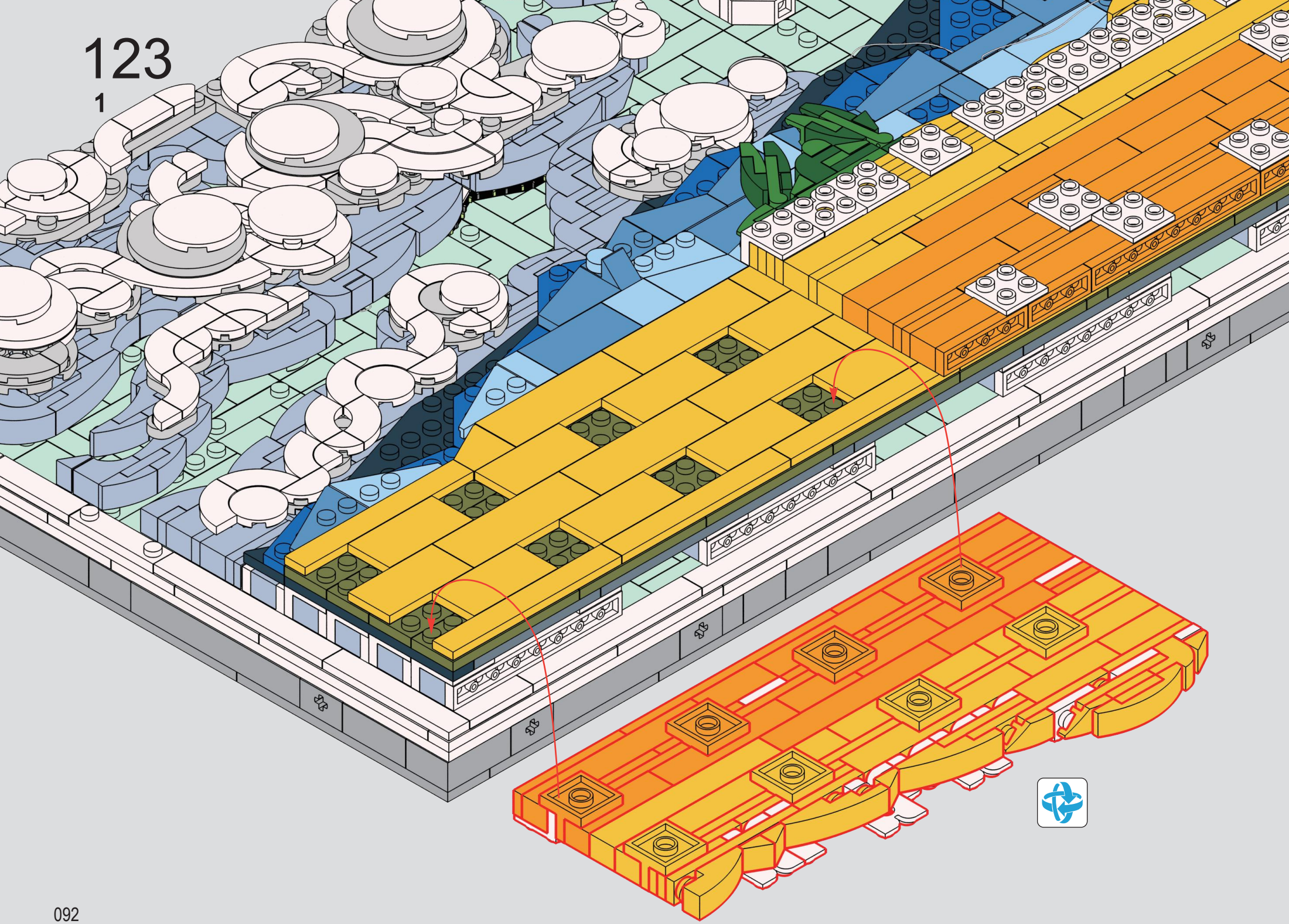
123
1

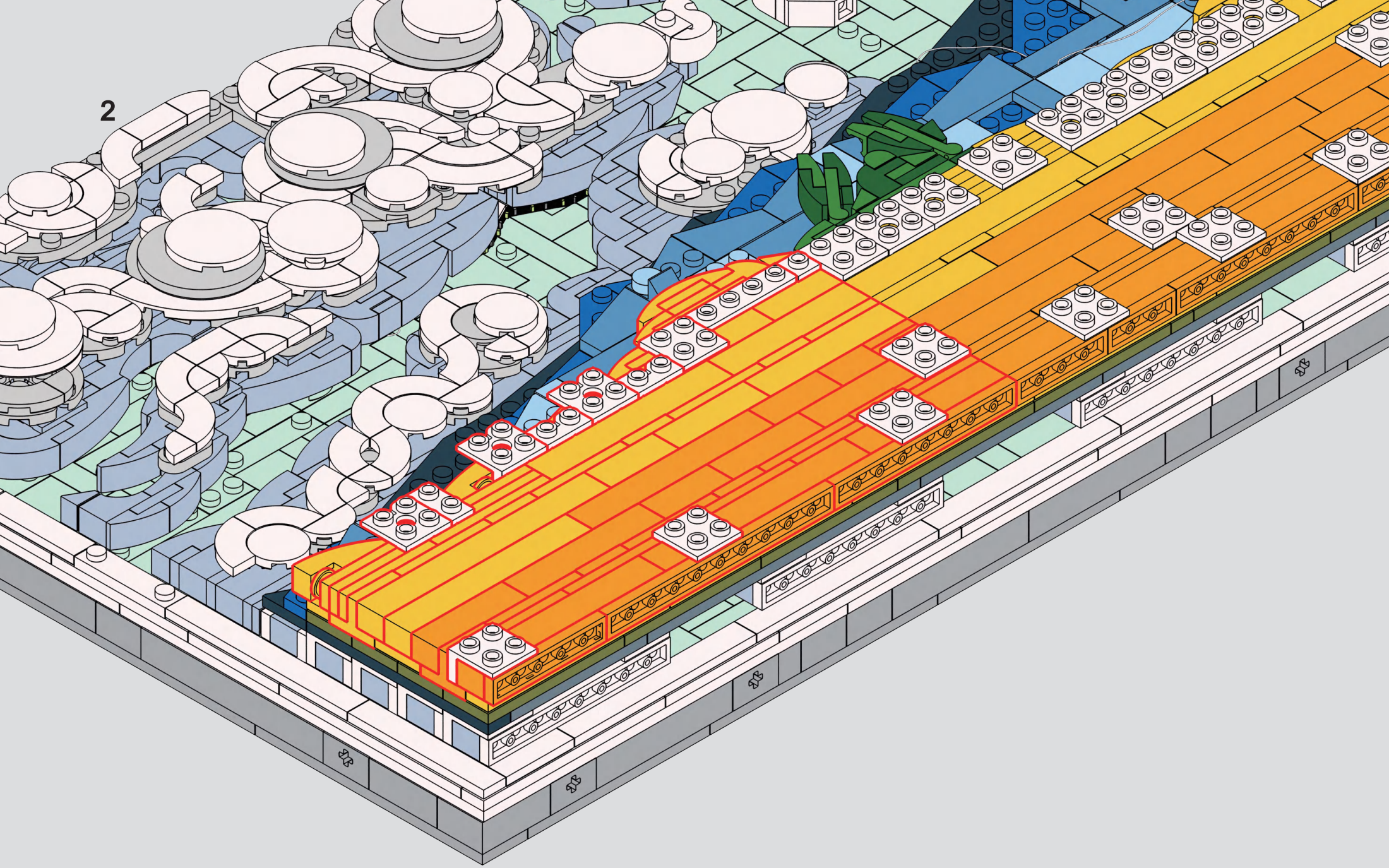
2

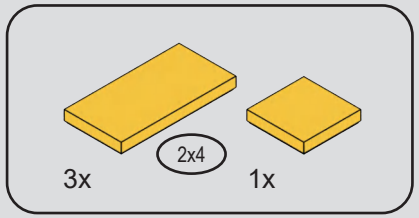

124

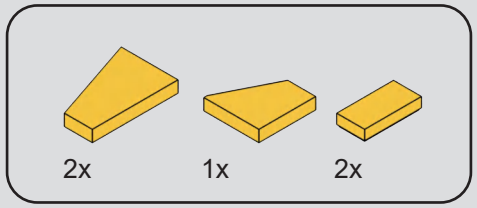

125

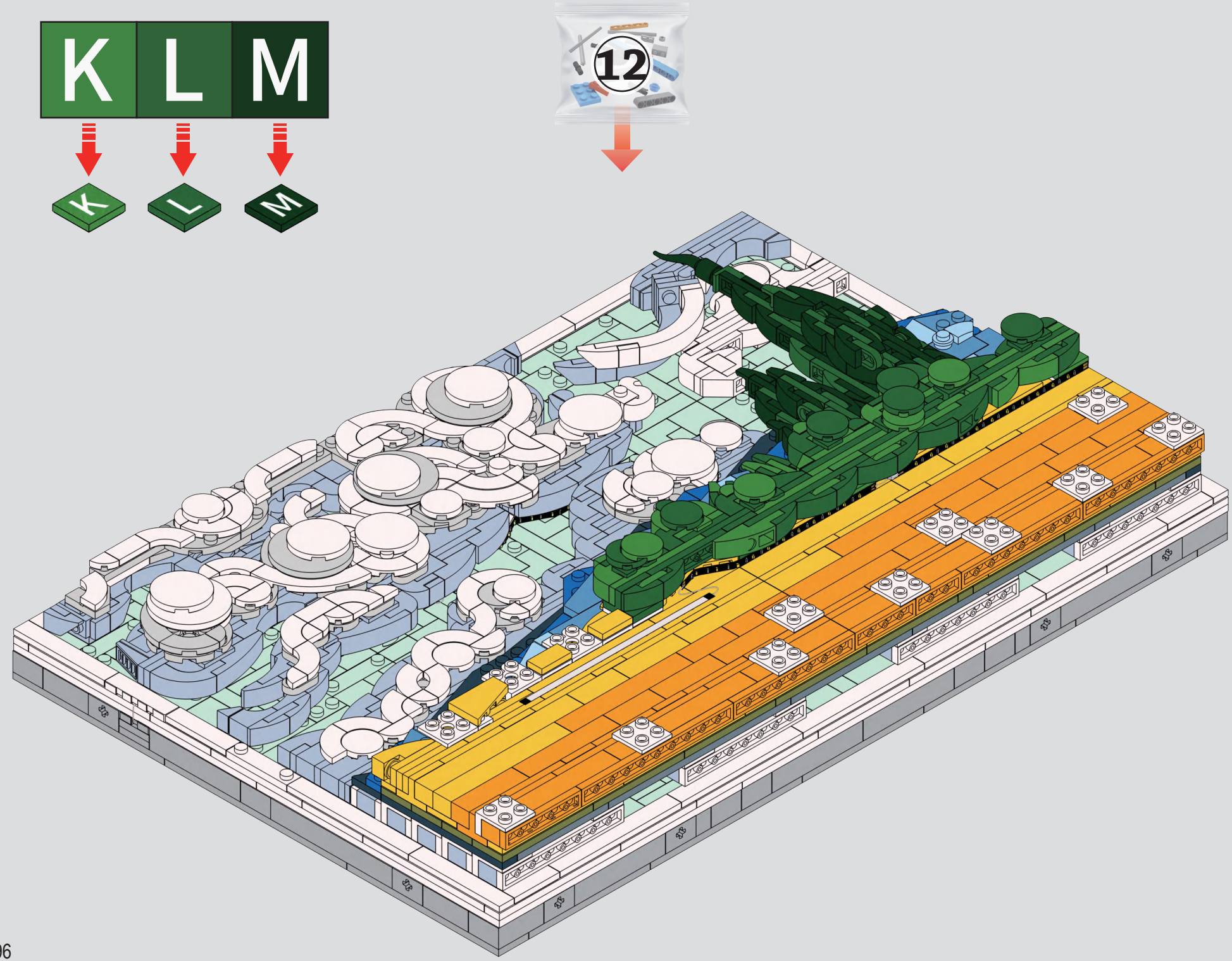
K L M
K
L
M
12

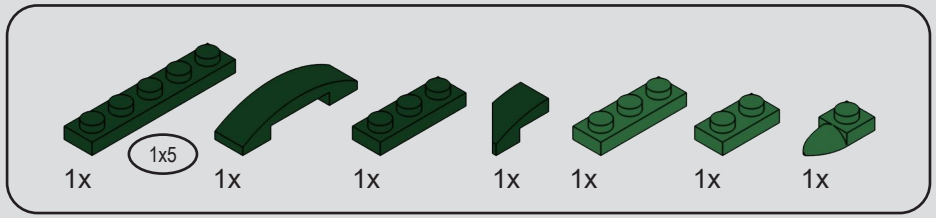

126

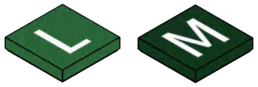

Check the color.
核对颜色。

1

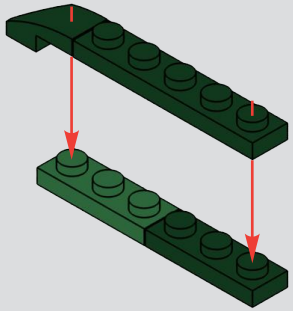

2

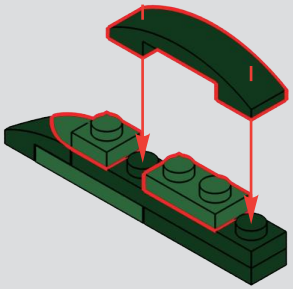

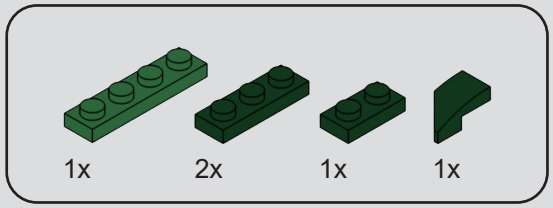

127

1

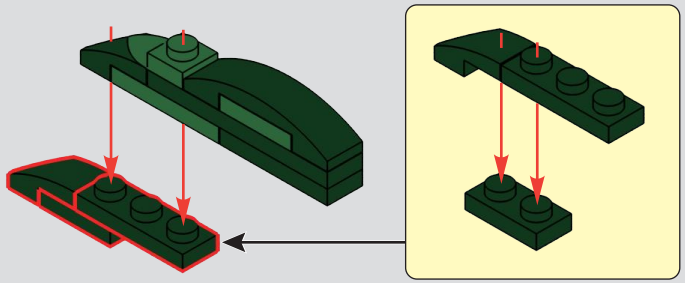

2

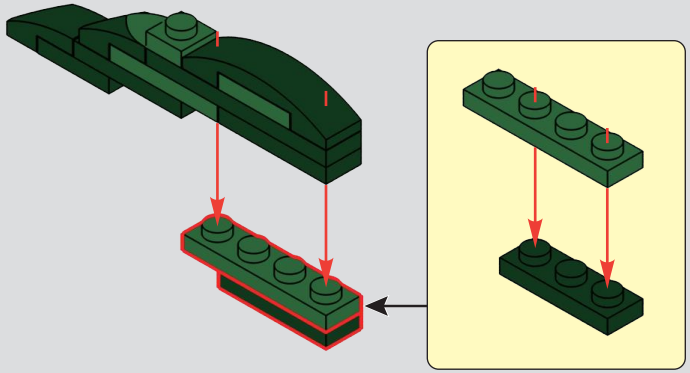

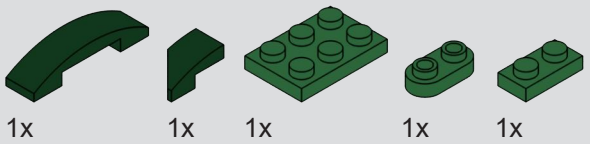

128

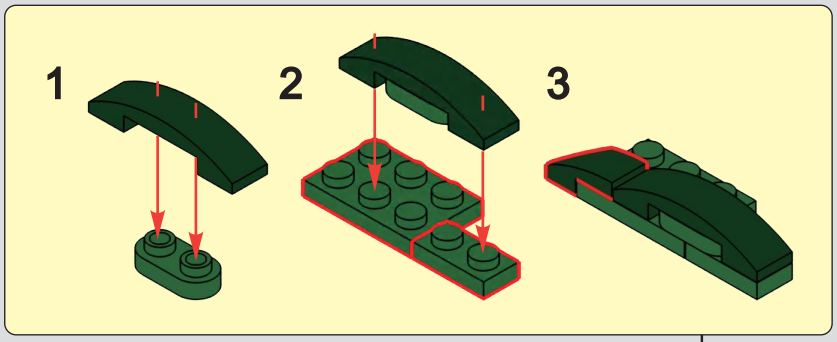

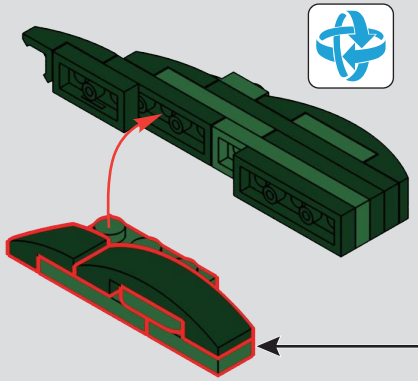

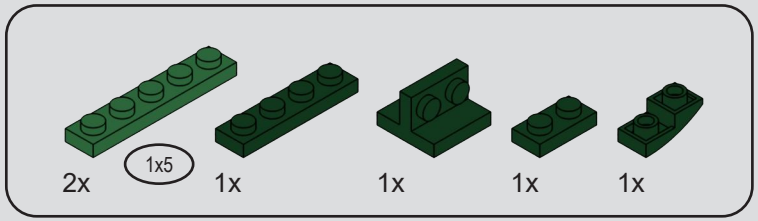

129

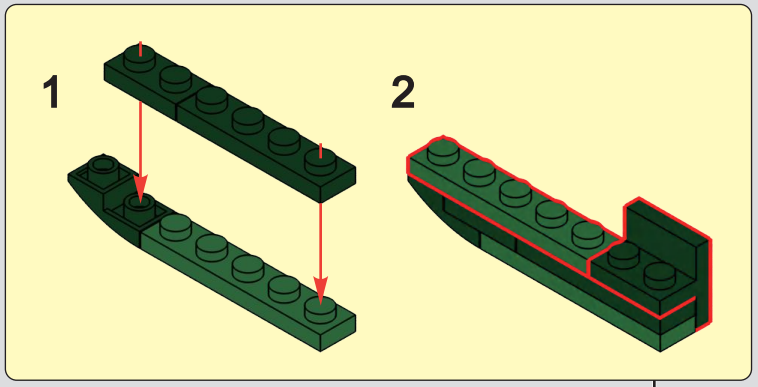

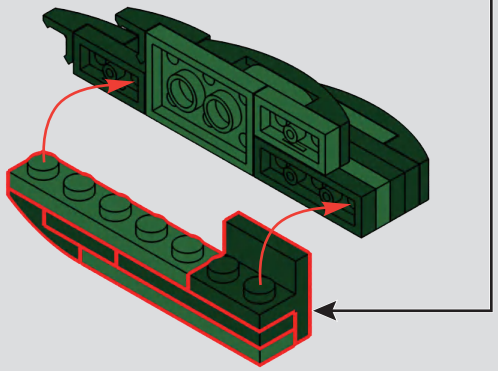

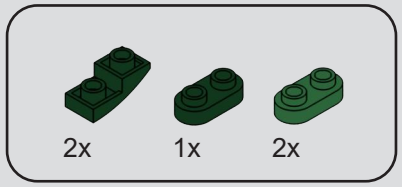

130

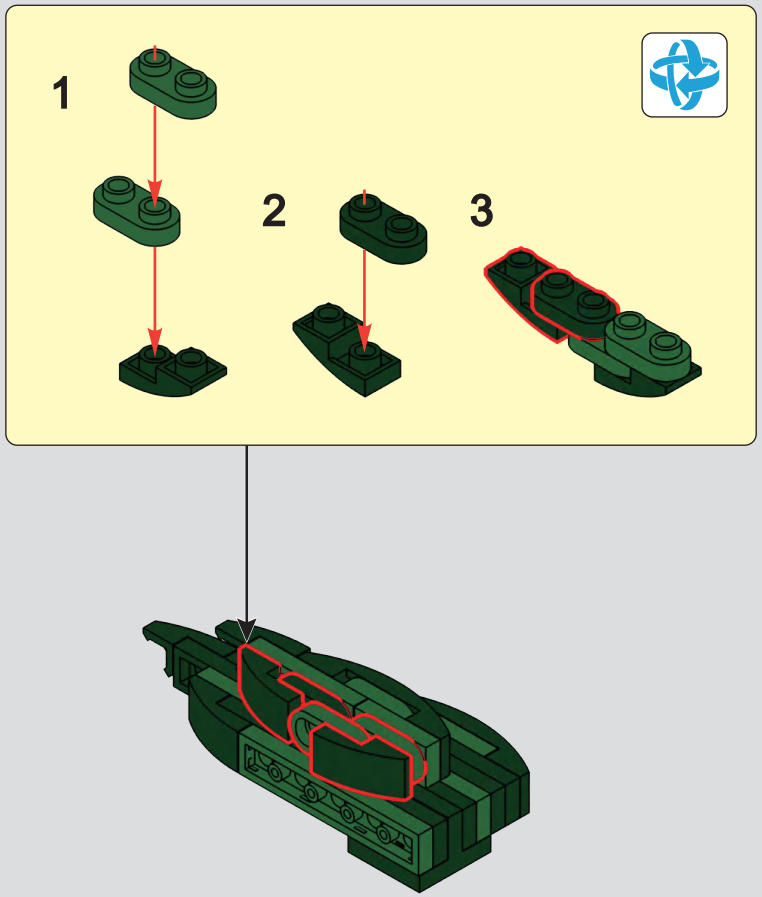

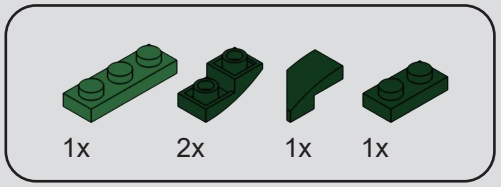

131

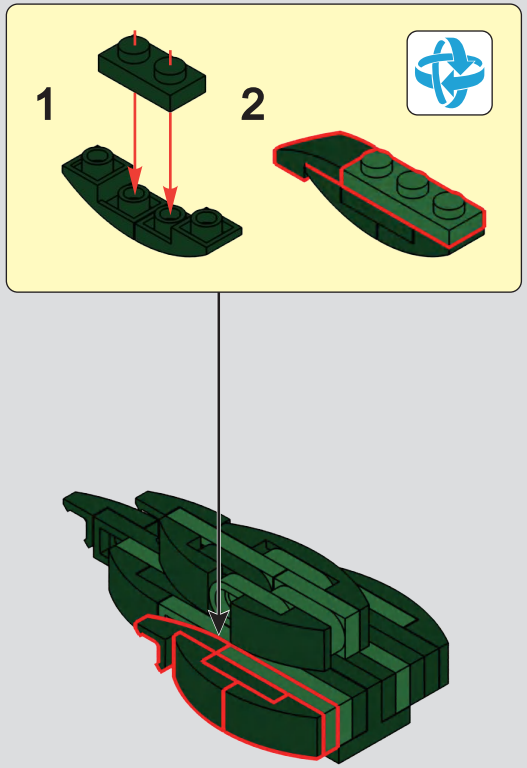

132

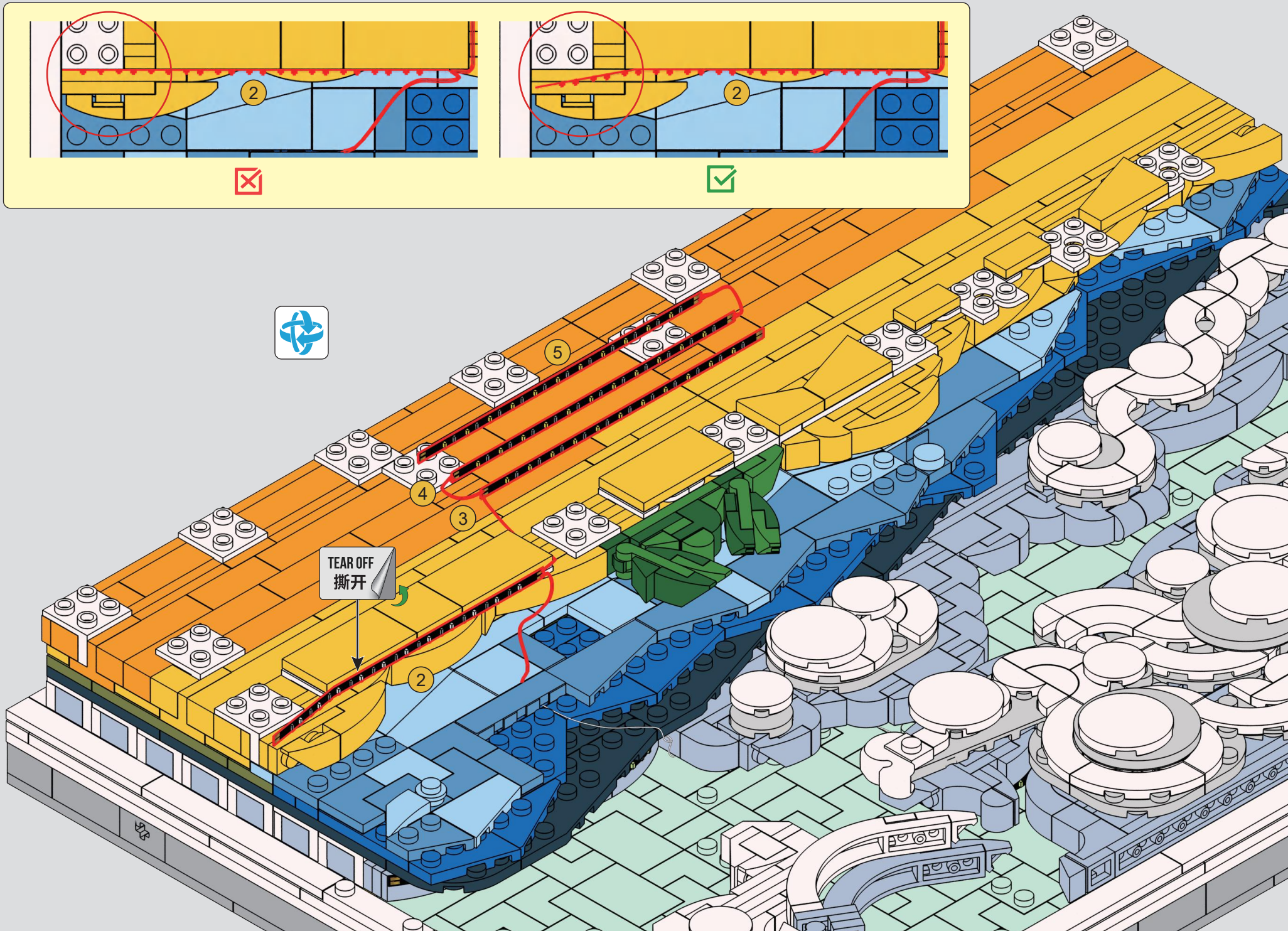

133

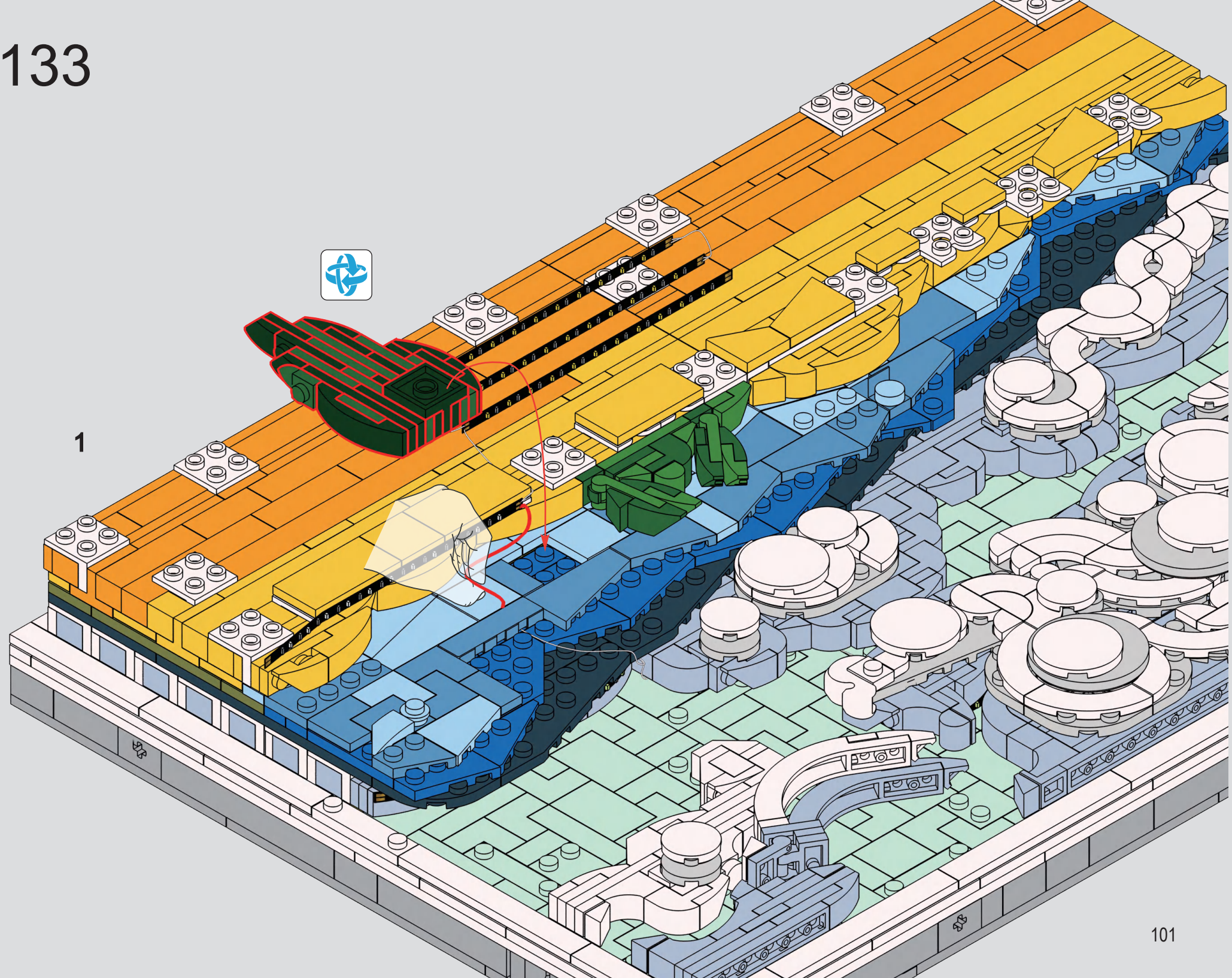

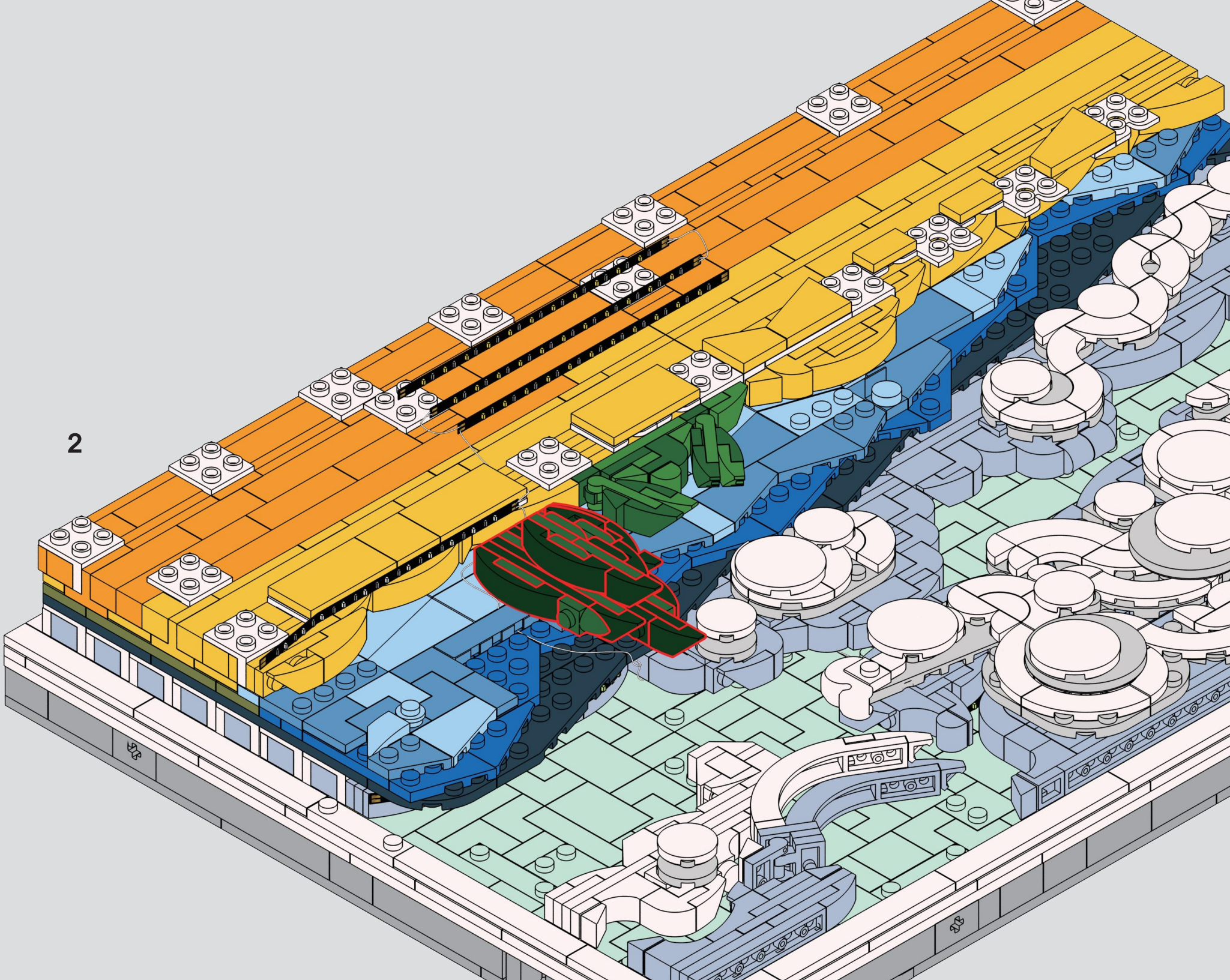
2

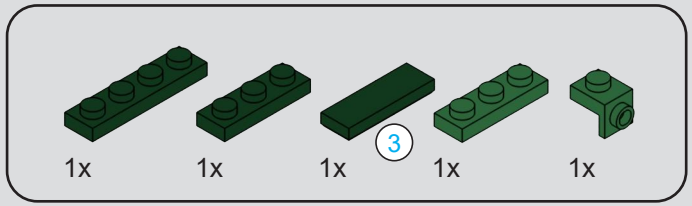

134

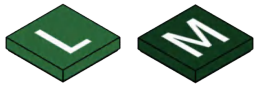

Check the color.
核对颜色。

1

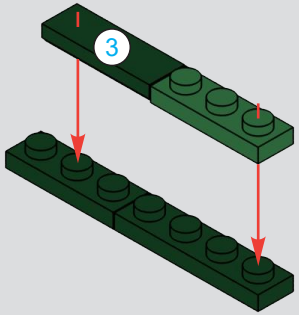

2

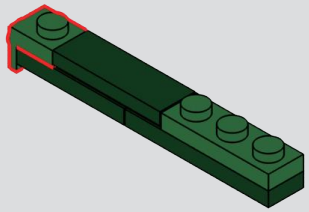

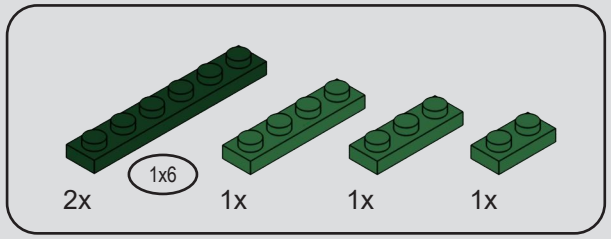

135

1

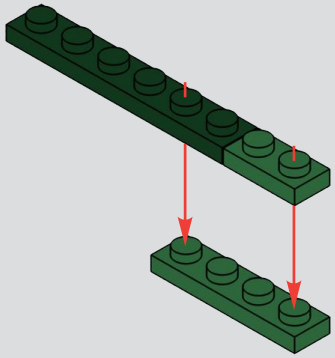

2

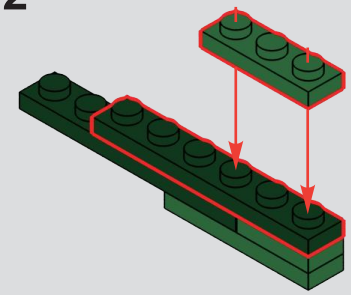

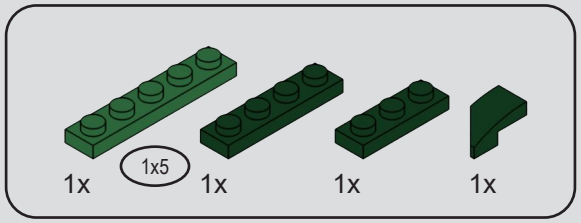

136

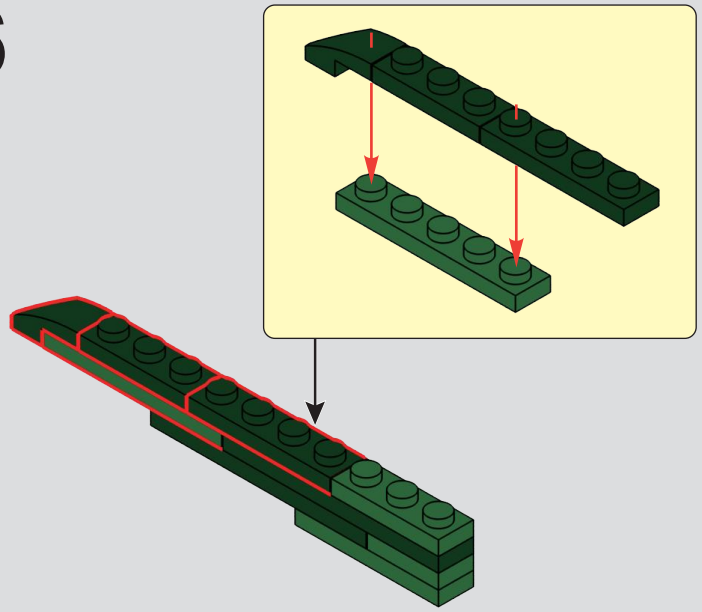

137

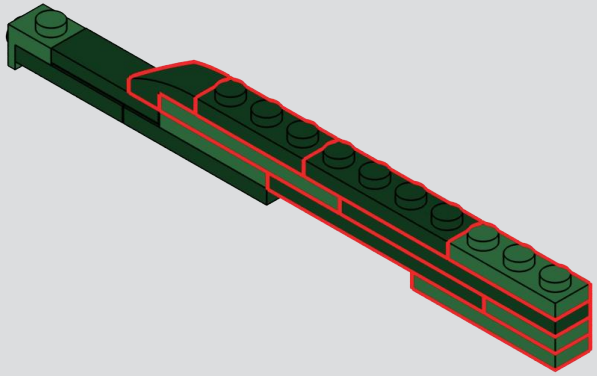

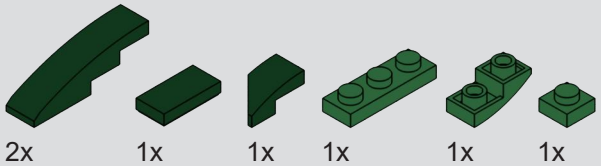

138

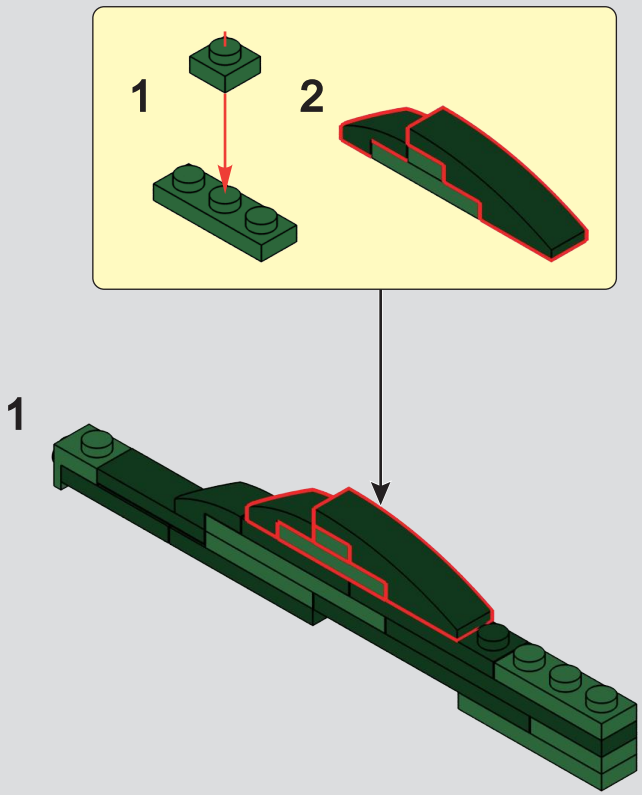

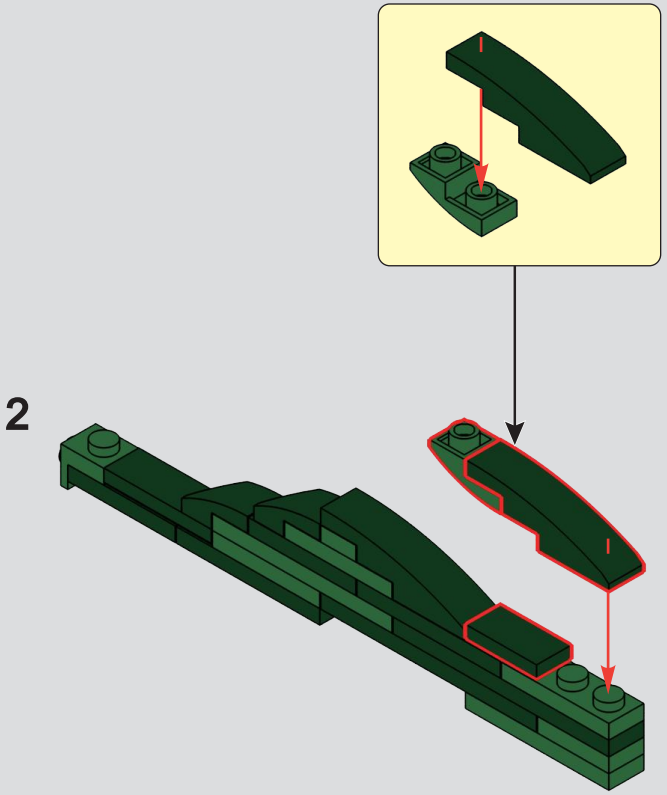

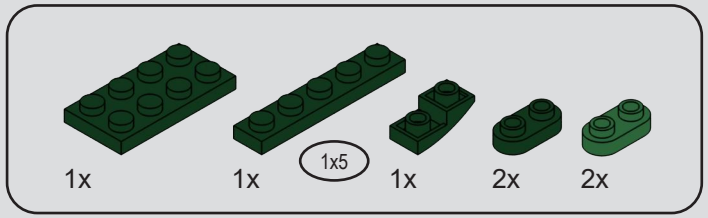

139

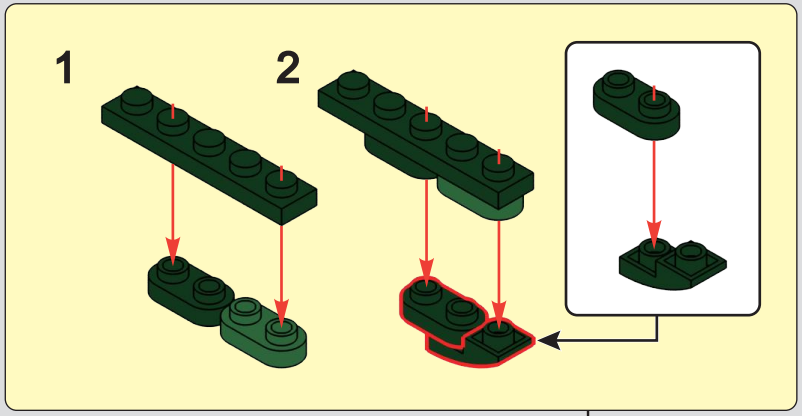

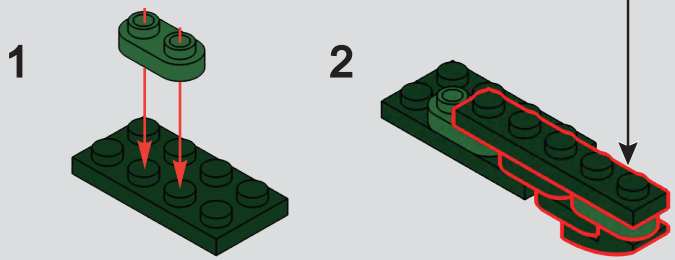

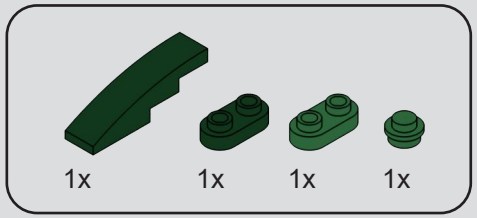

140

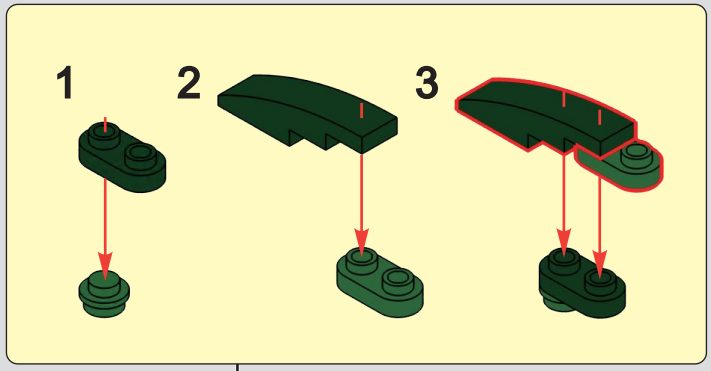

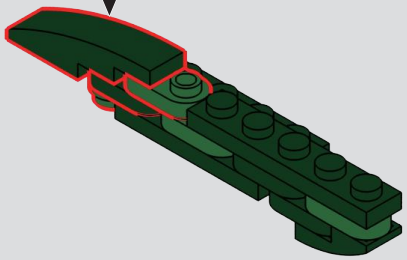

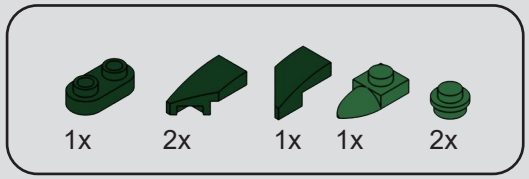

141

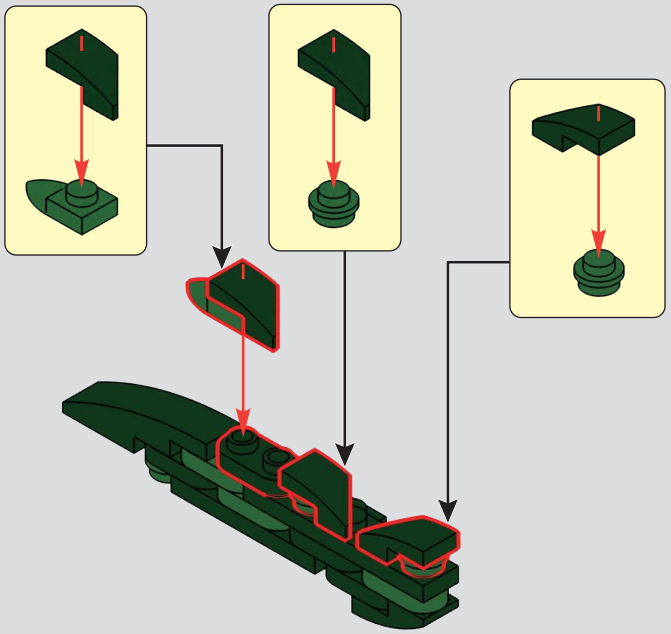

142

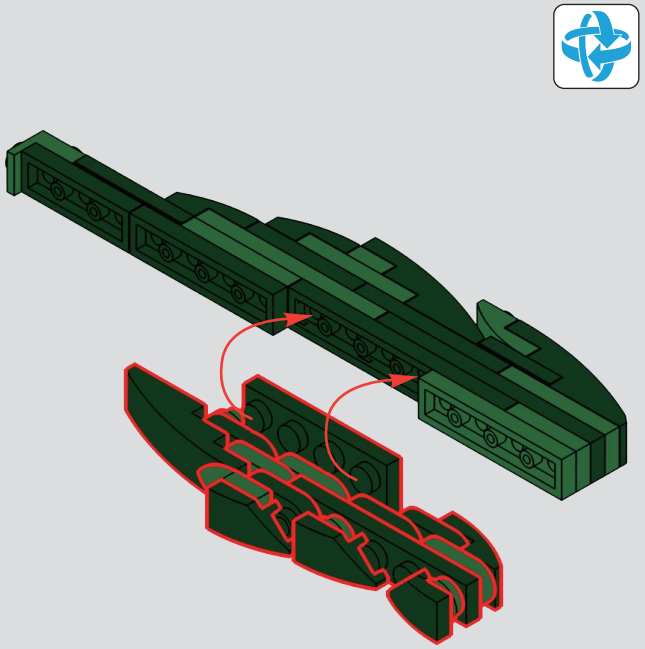

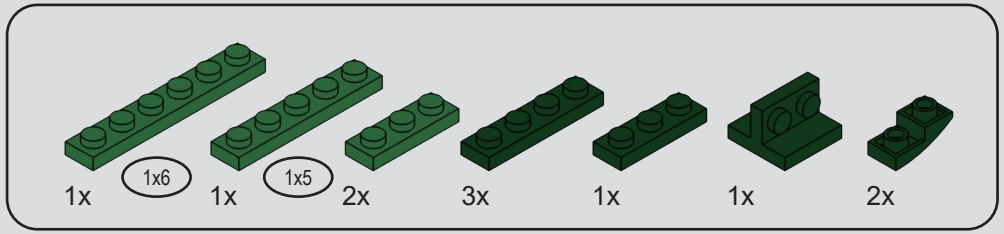

143

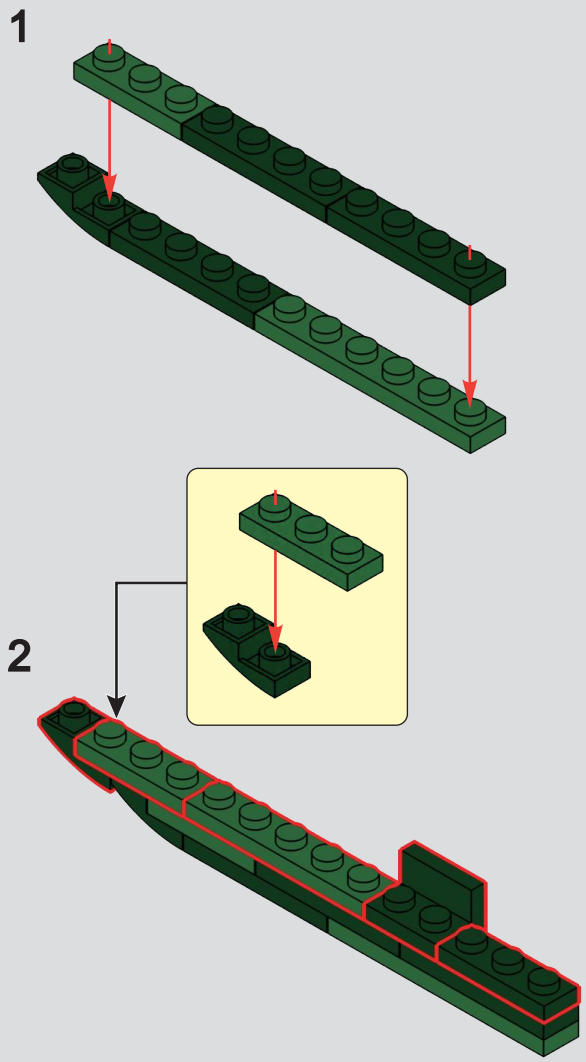

144

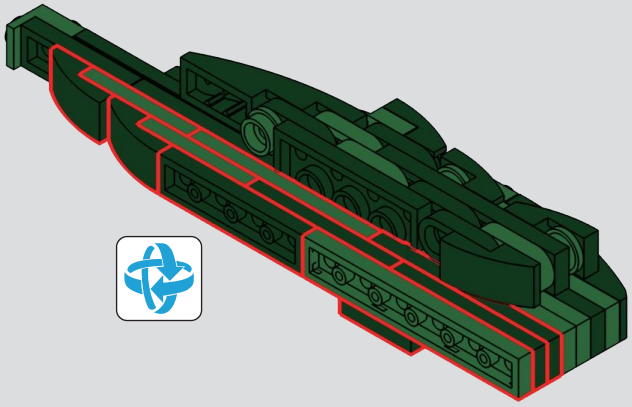

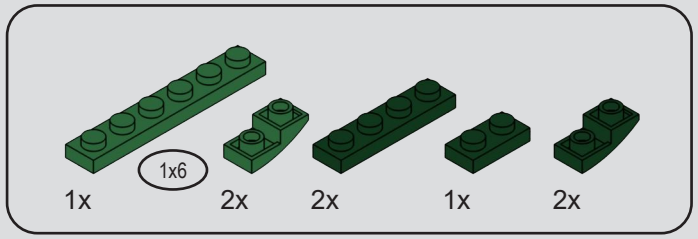

145

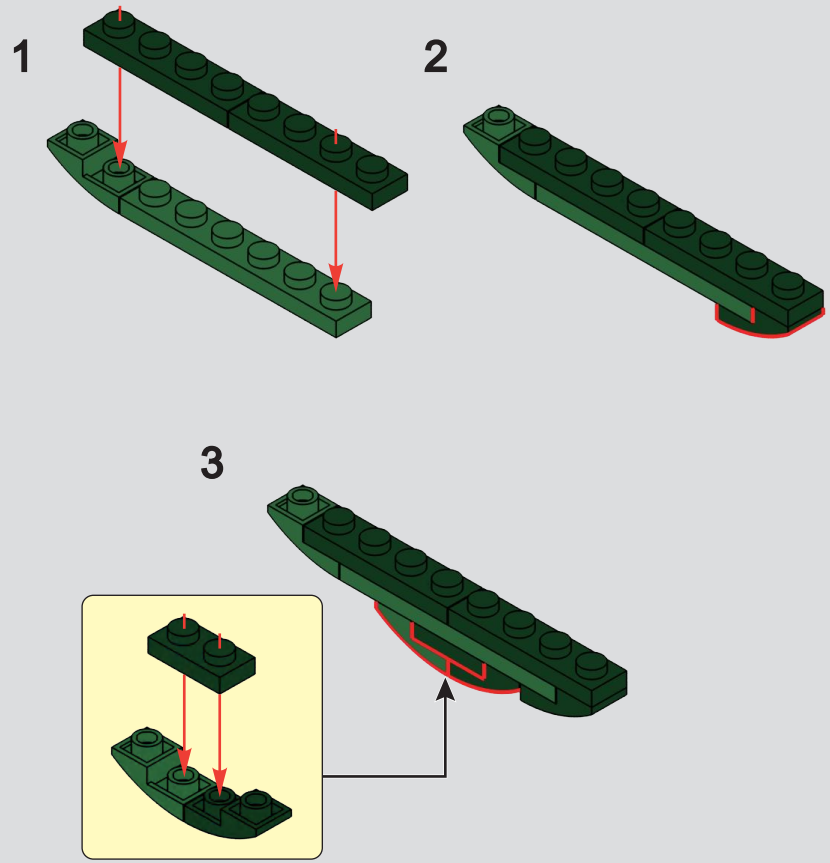

146

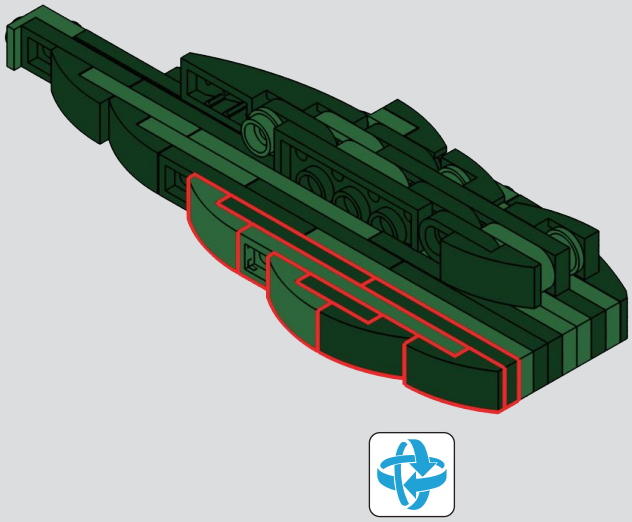

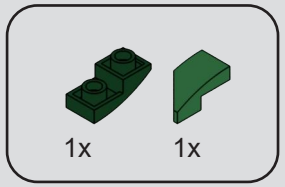

147

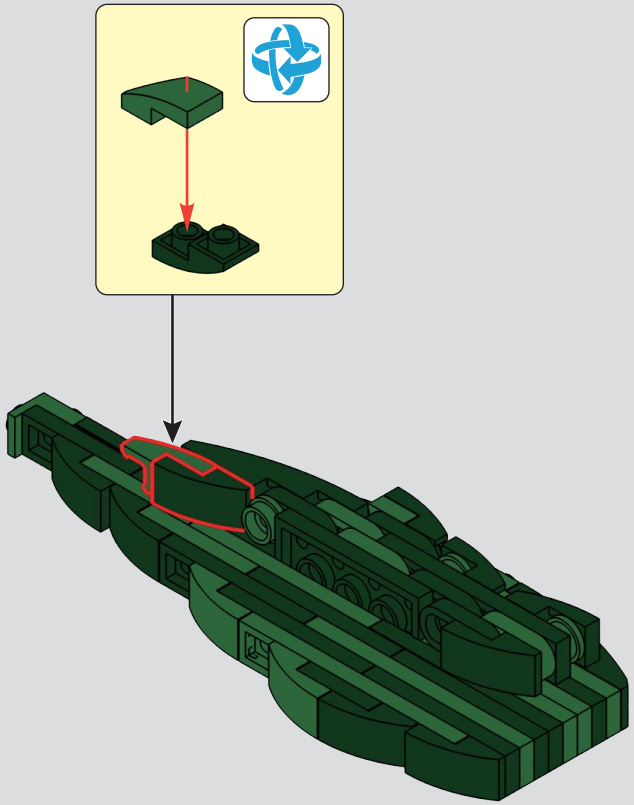

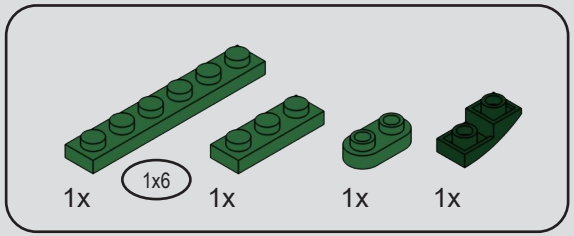

148

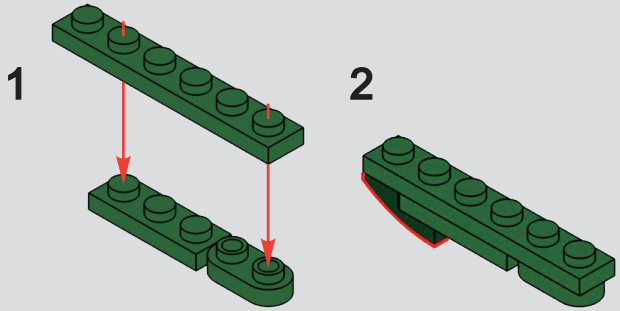

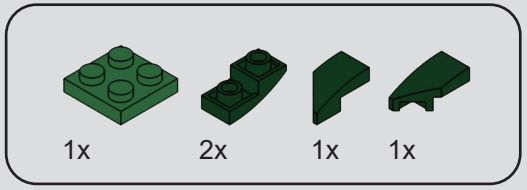

149

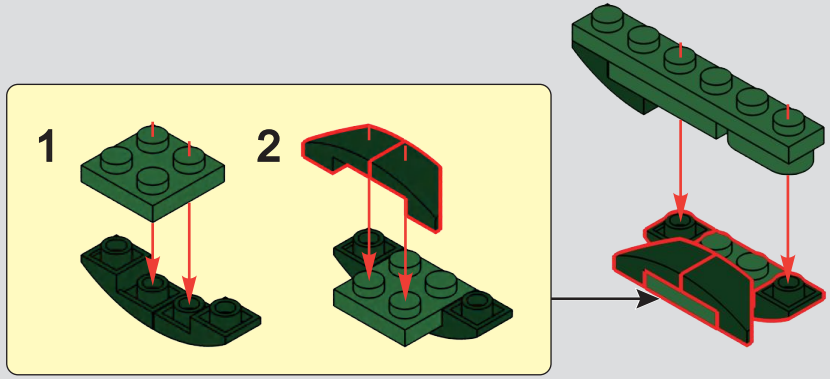

150

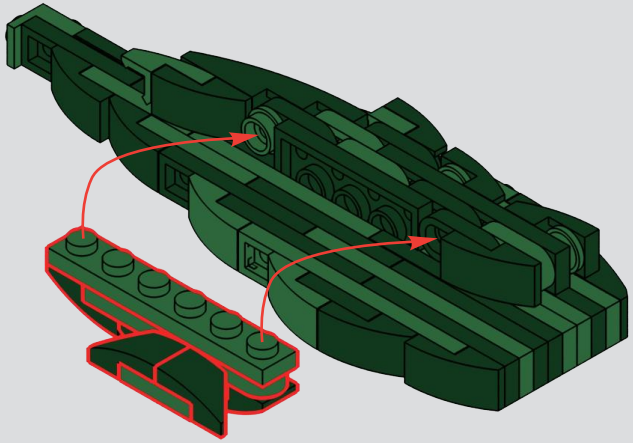

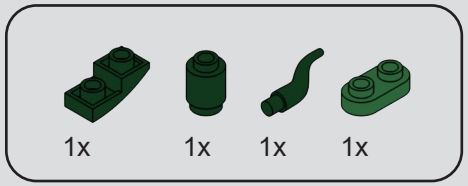

151

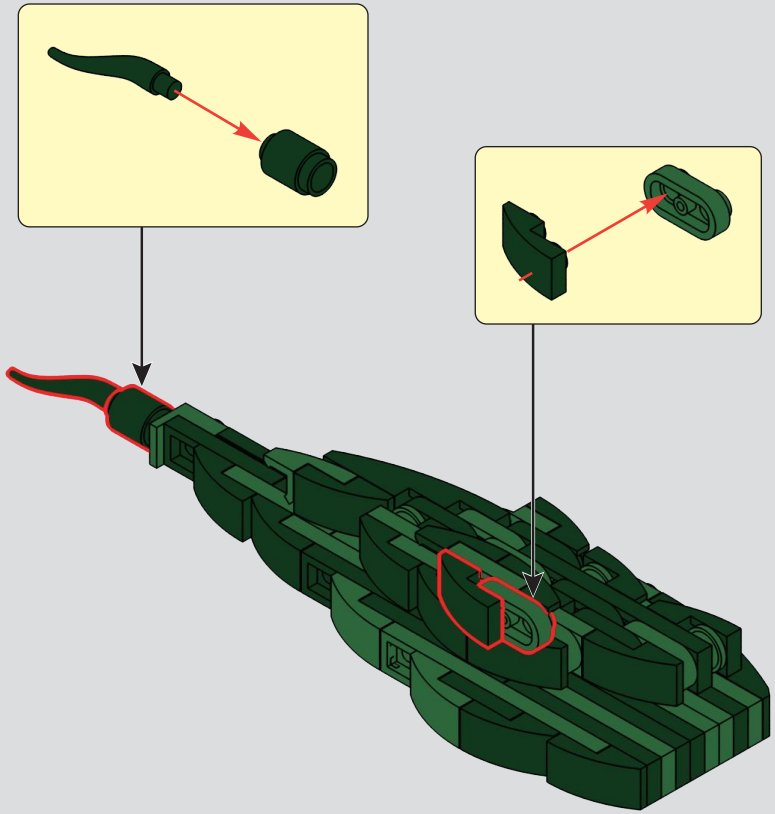

152

1

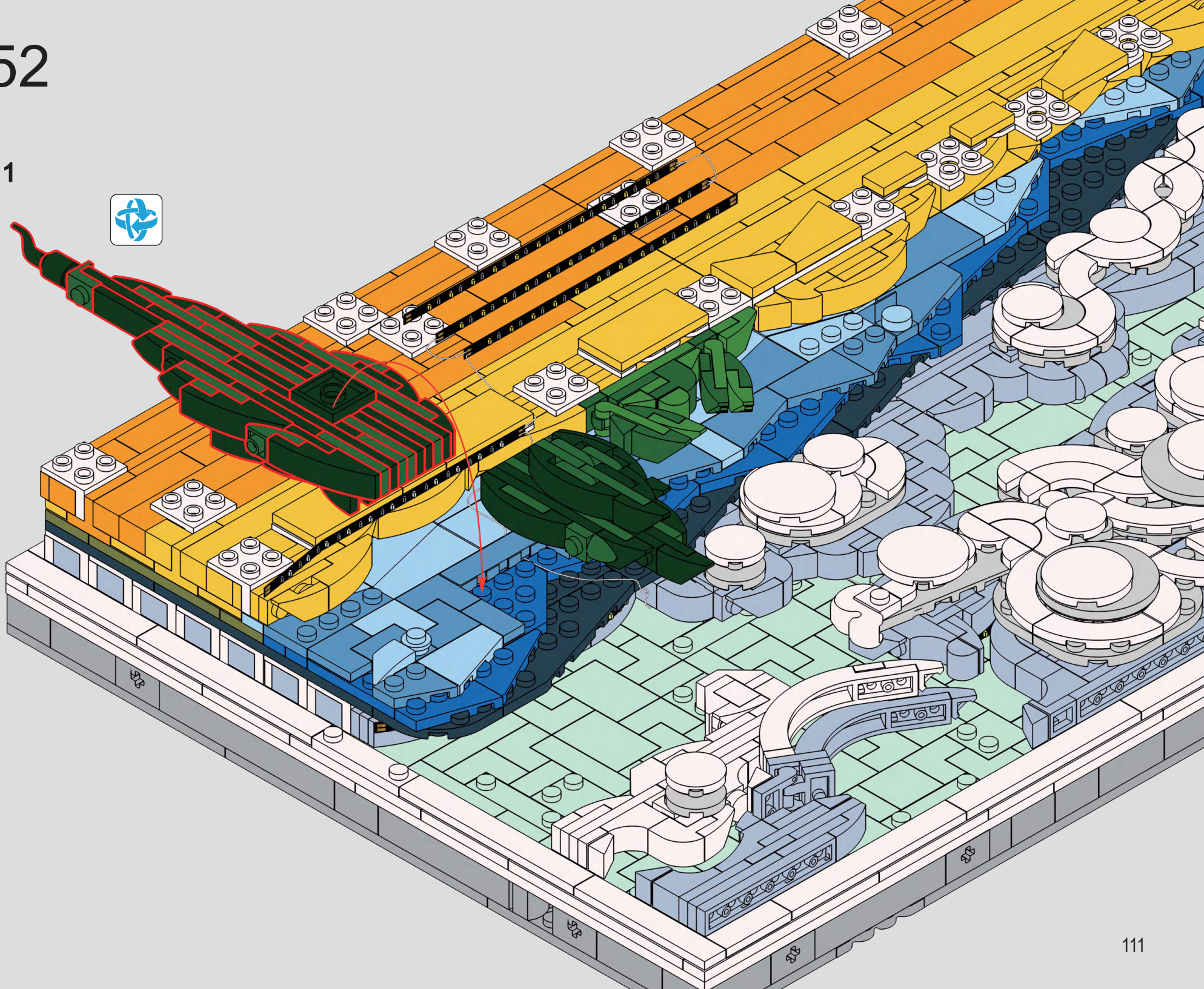

2

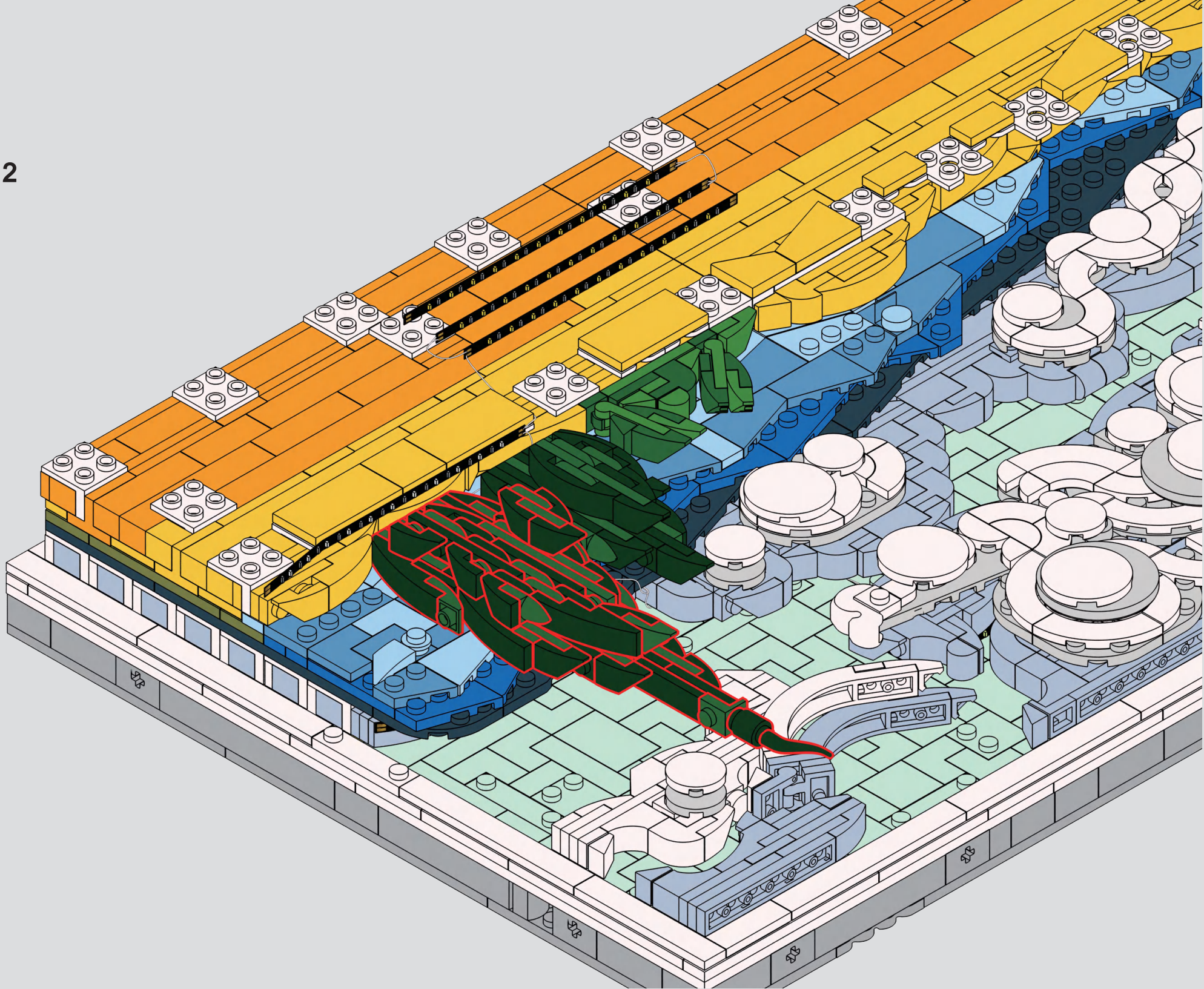

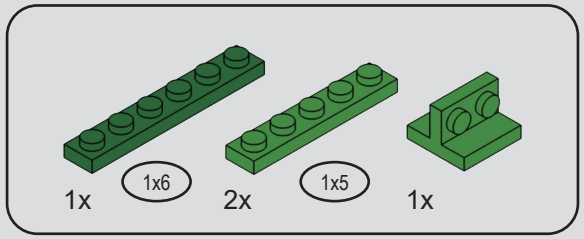
1x
1x6
2x
1x5
1x

153

K
L
Check the color.
核对颜色。

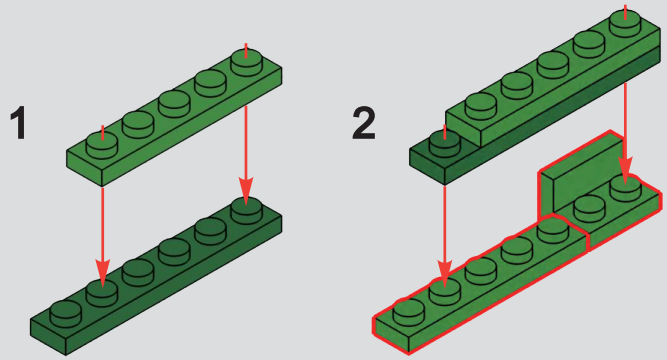
1
2

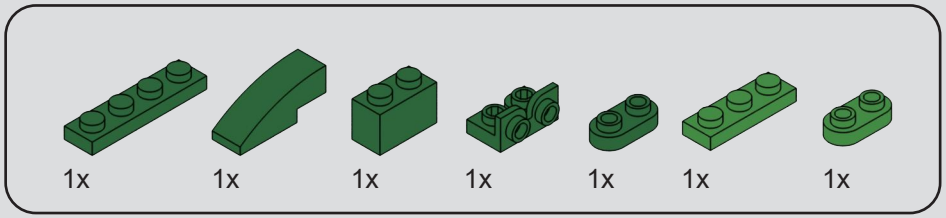
1x
1x
1x
1x
1x
1x
1x

154

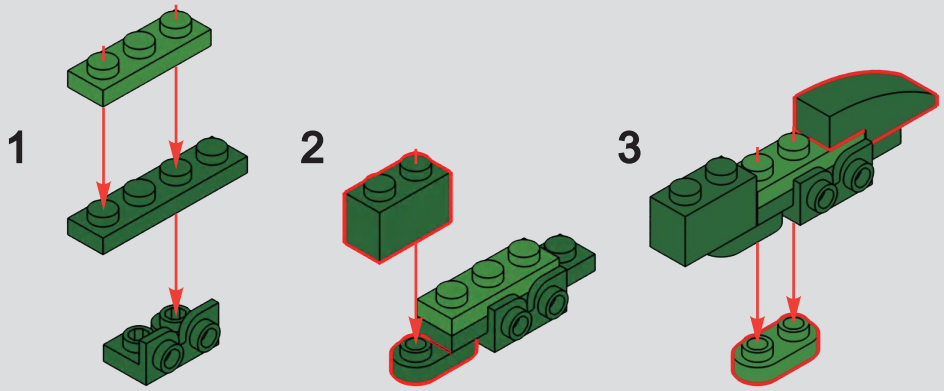
1
2
3

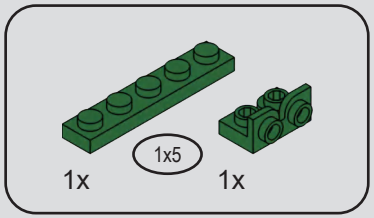
1x
1x5
1x

155

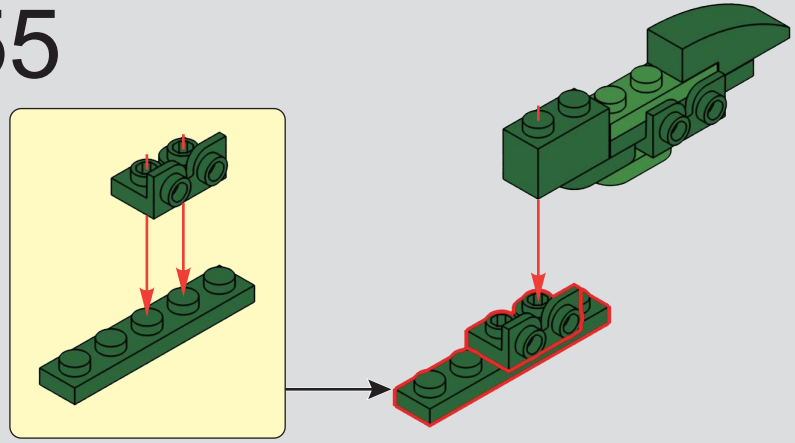

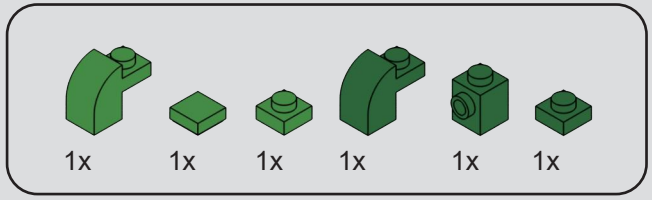

156

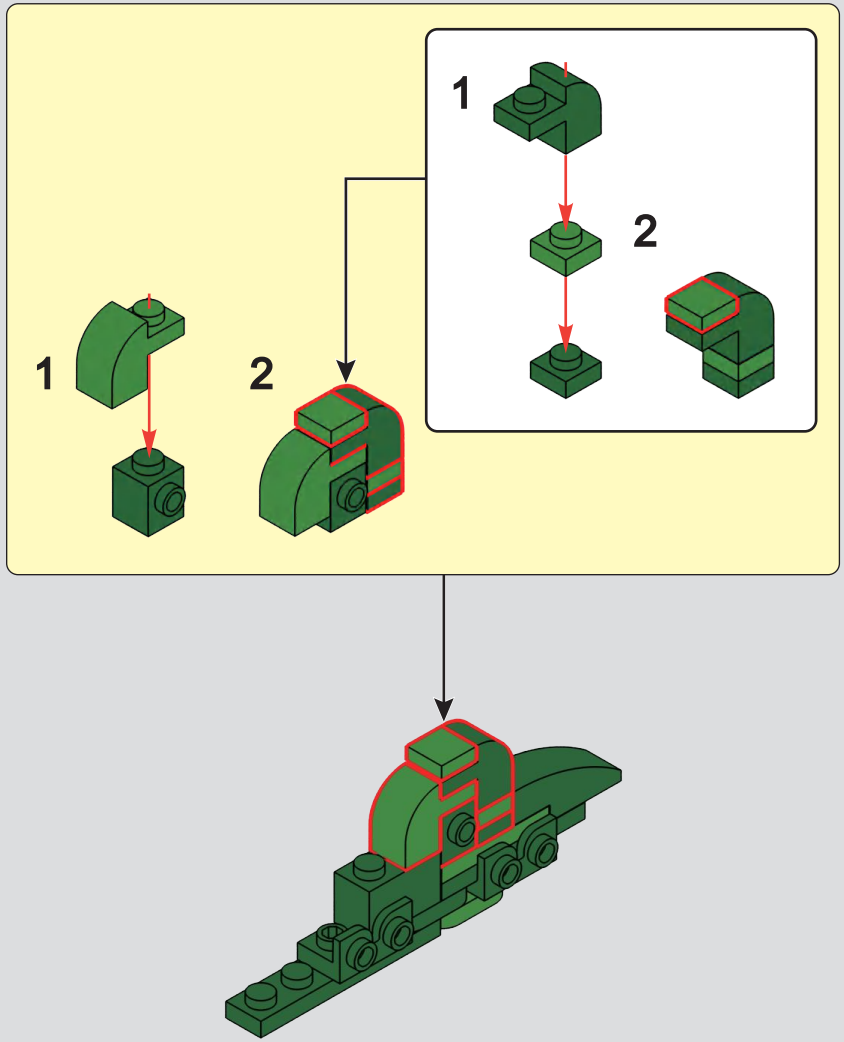

157

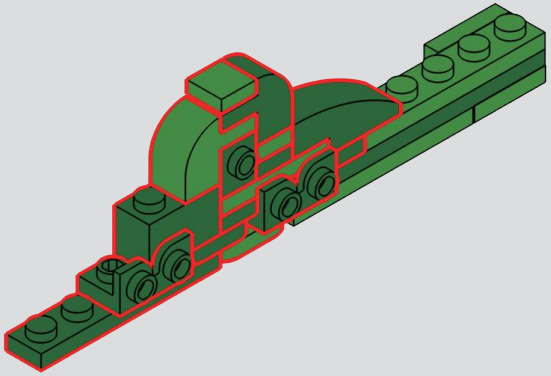

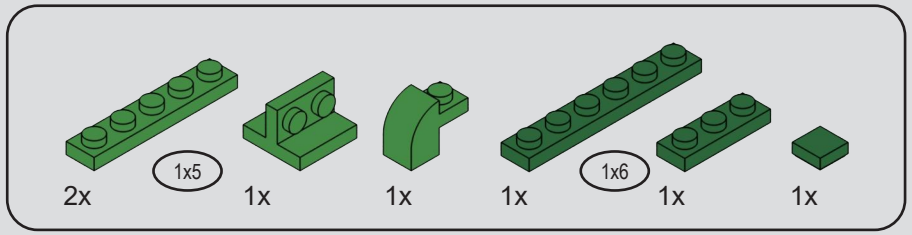

158

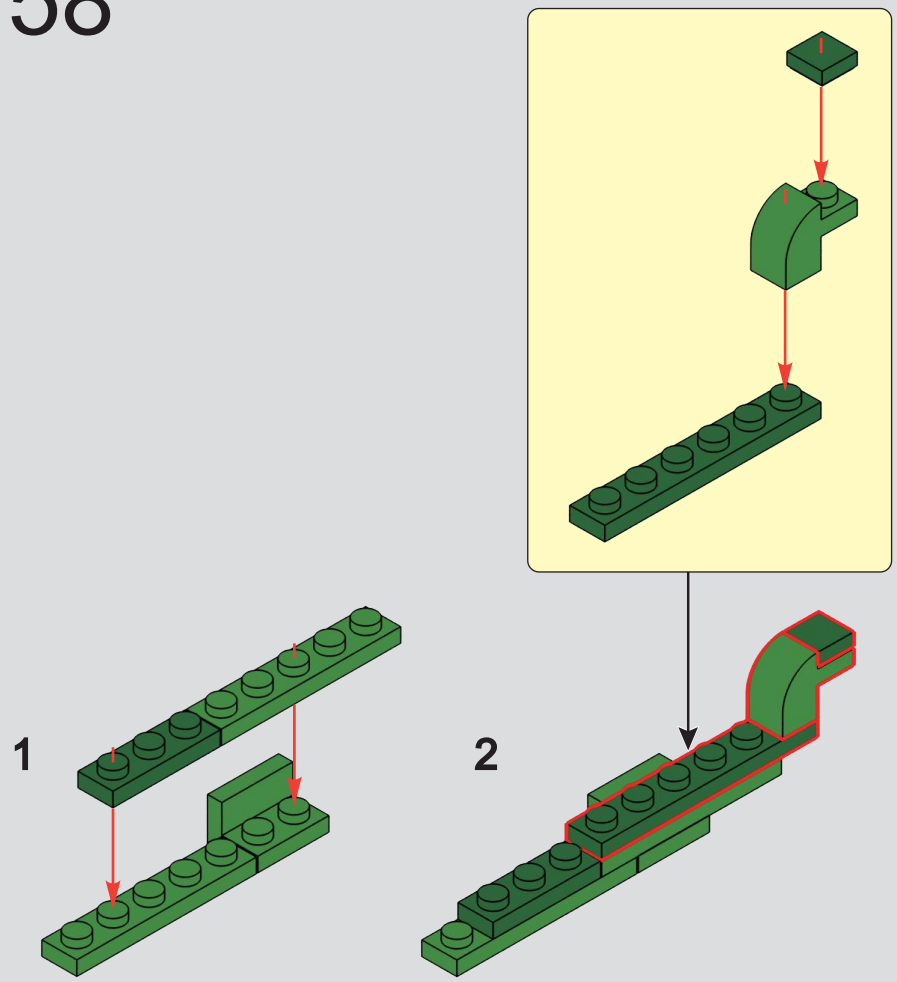

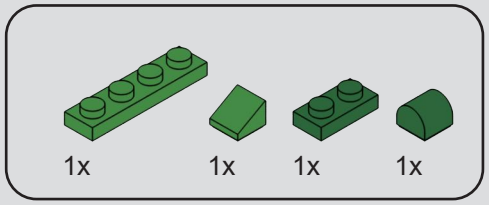

159

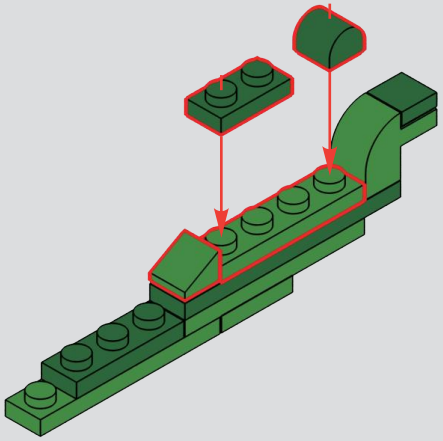

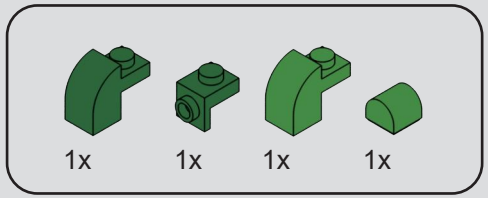

160

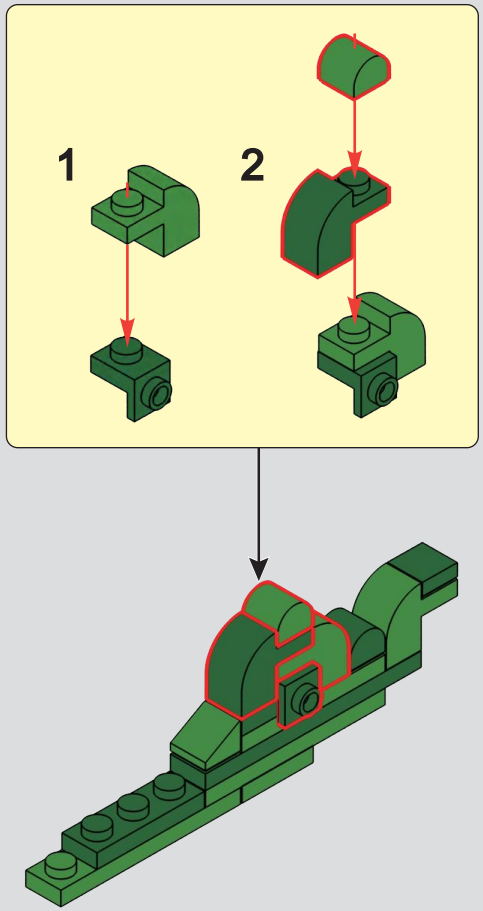

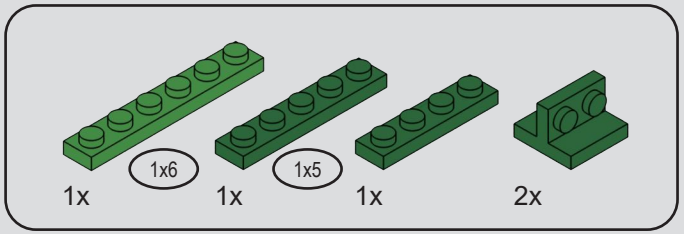

161

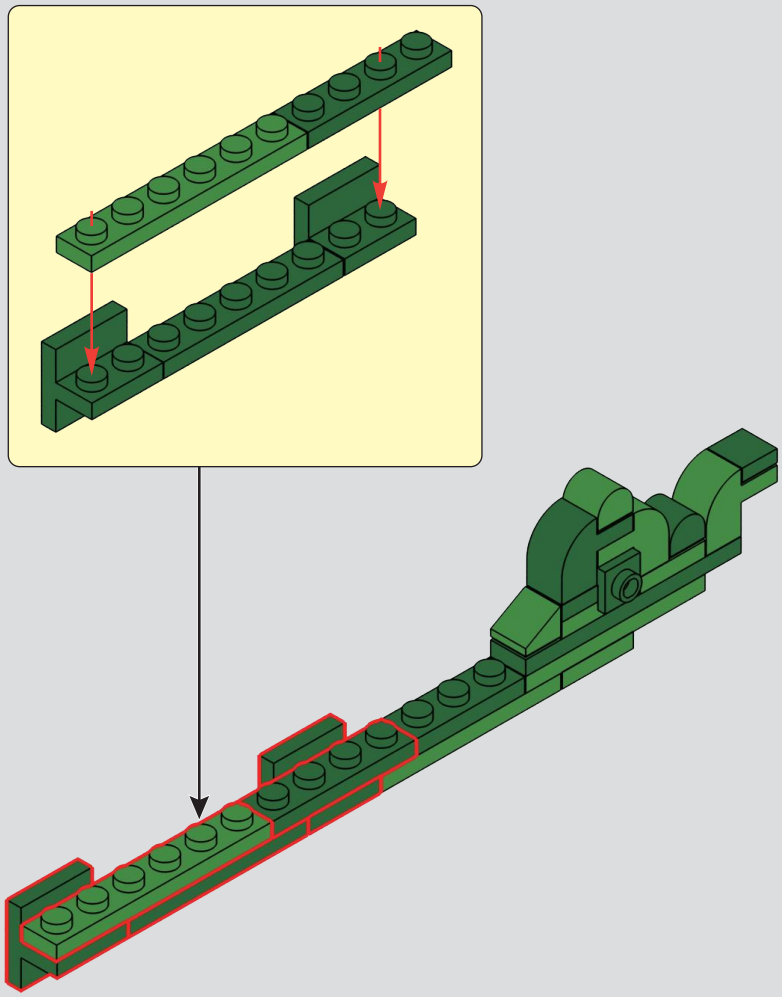

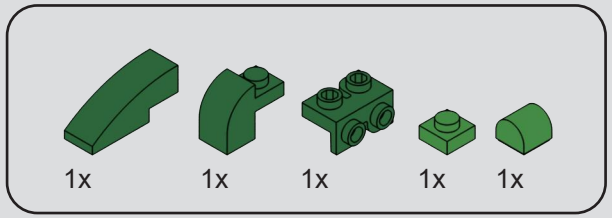

162

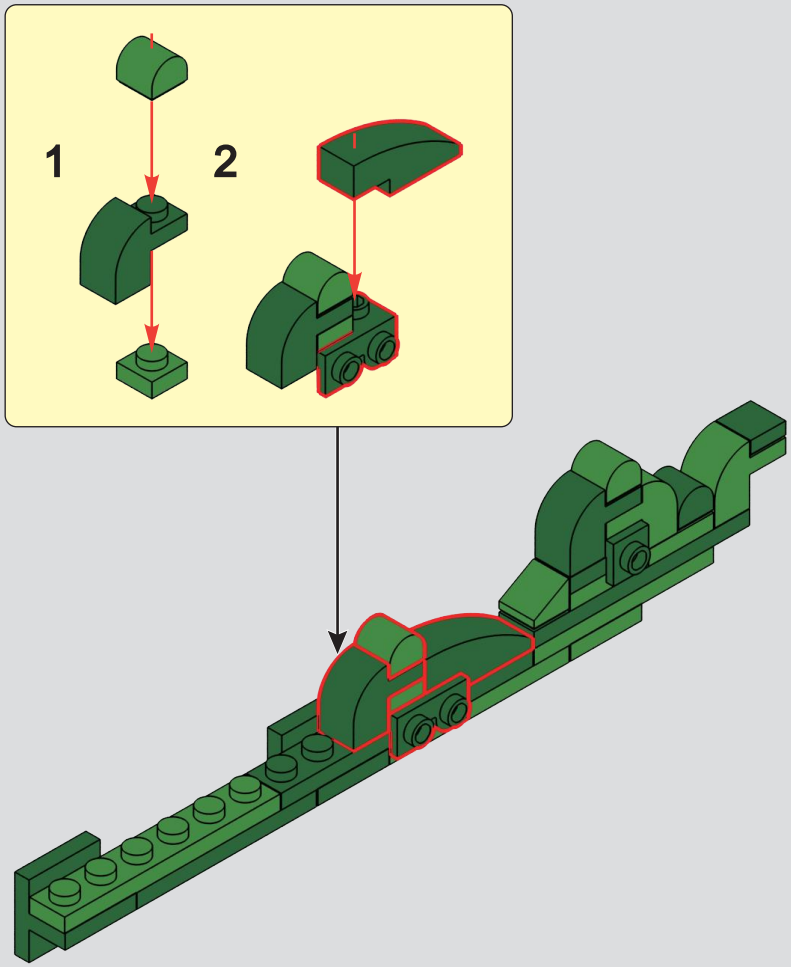

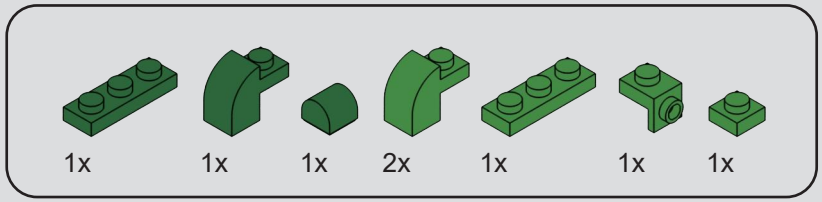

163

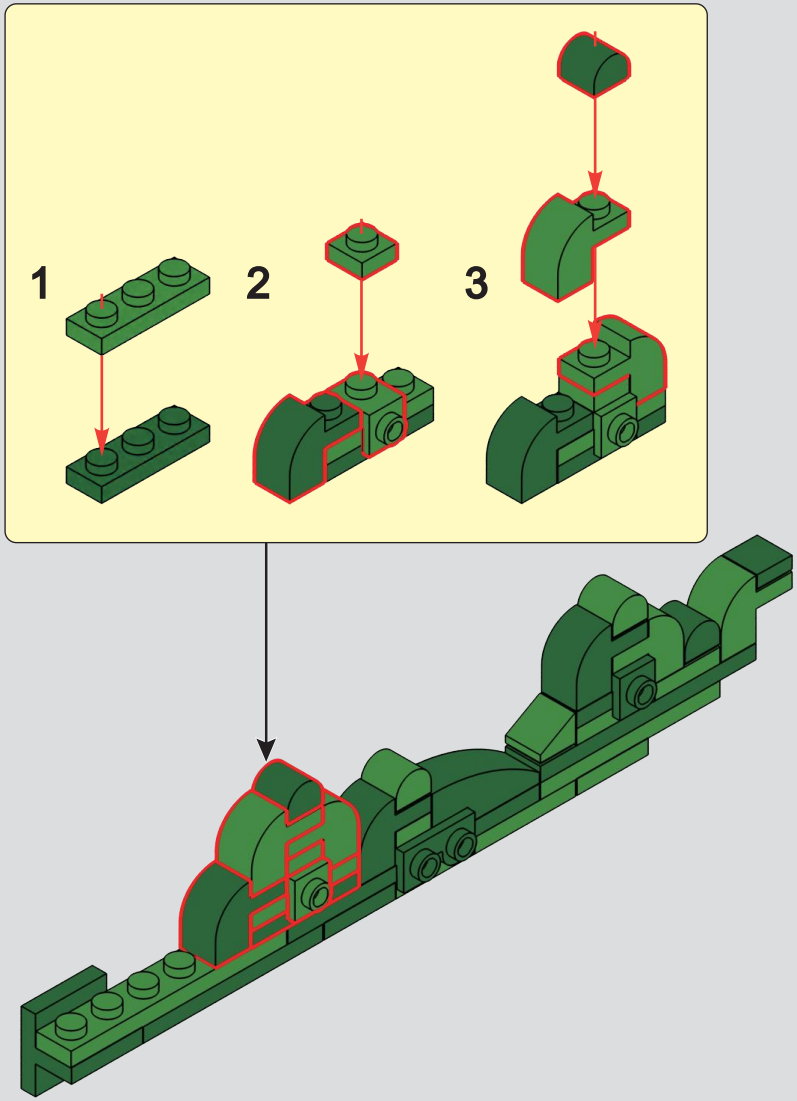

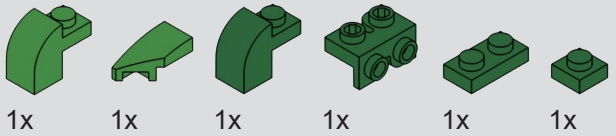

164

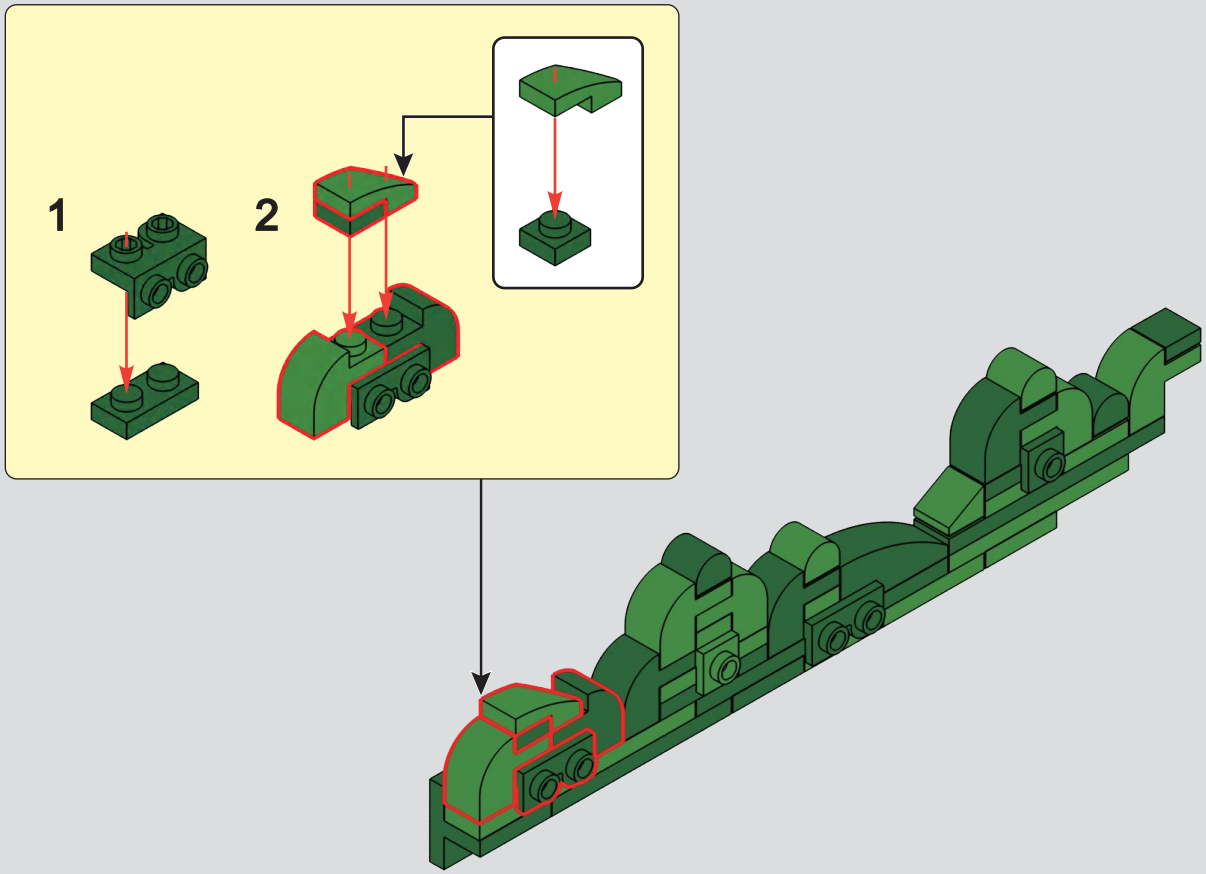

165

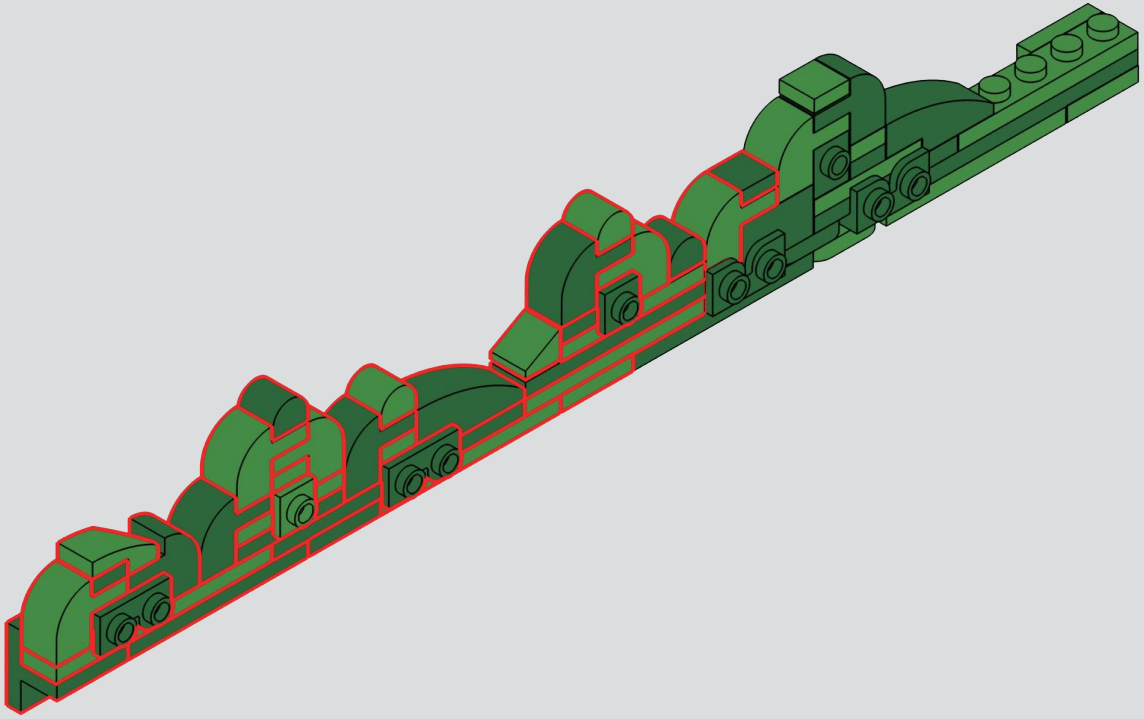

166

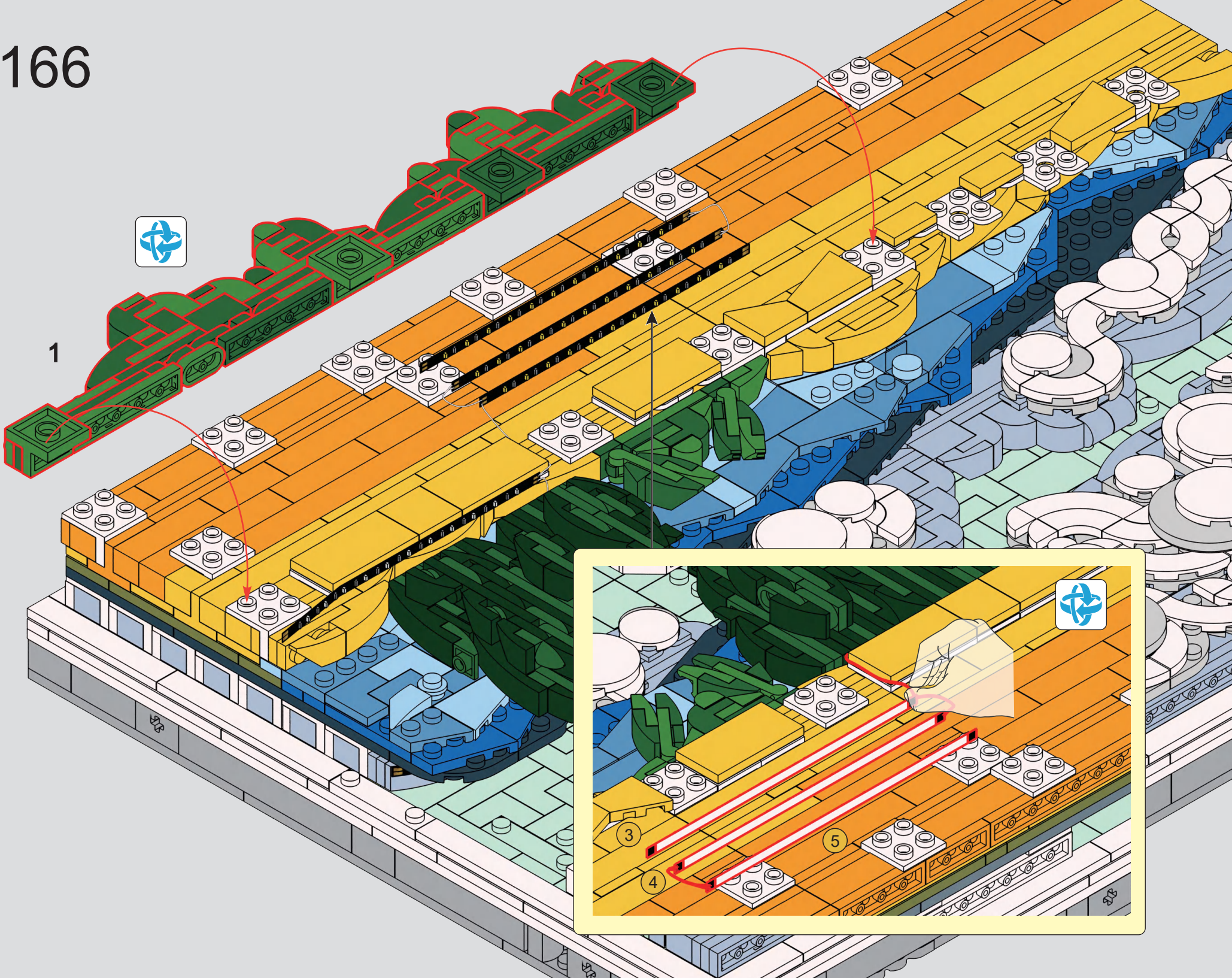

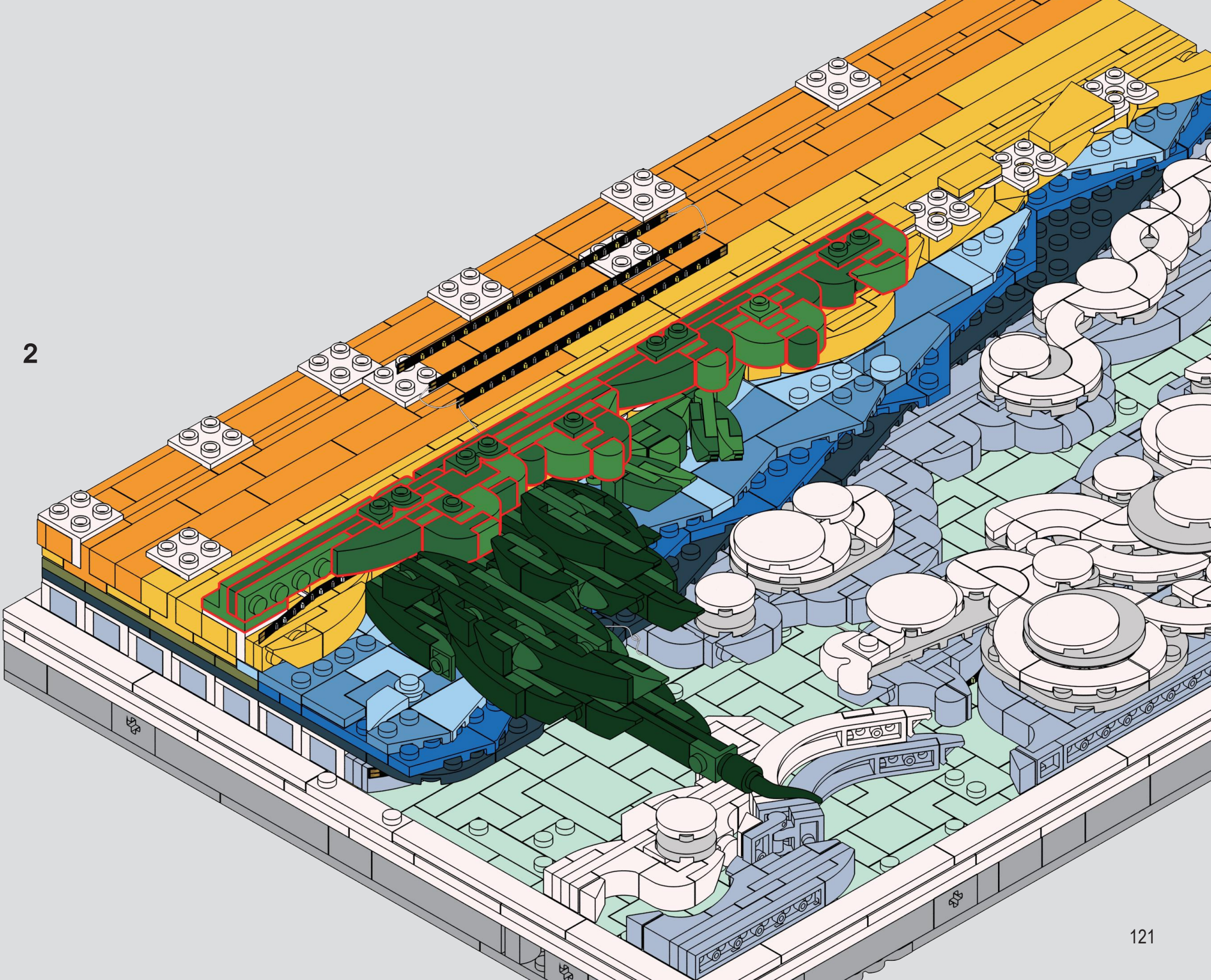
2

167

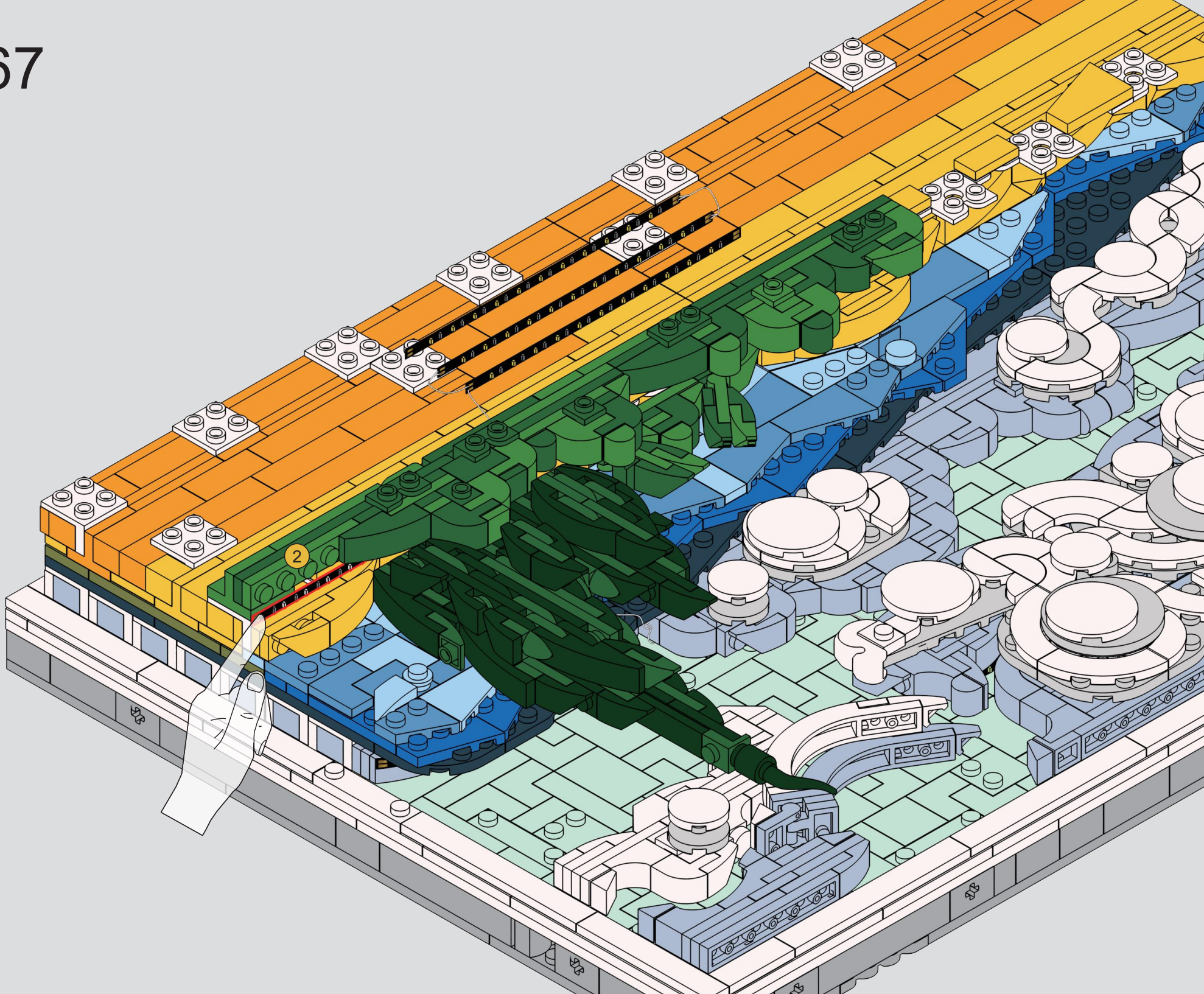

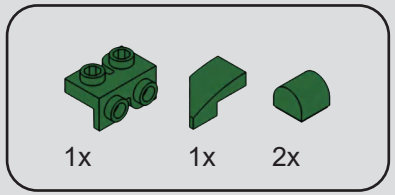

168

169

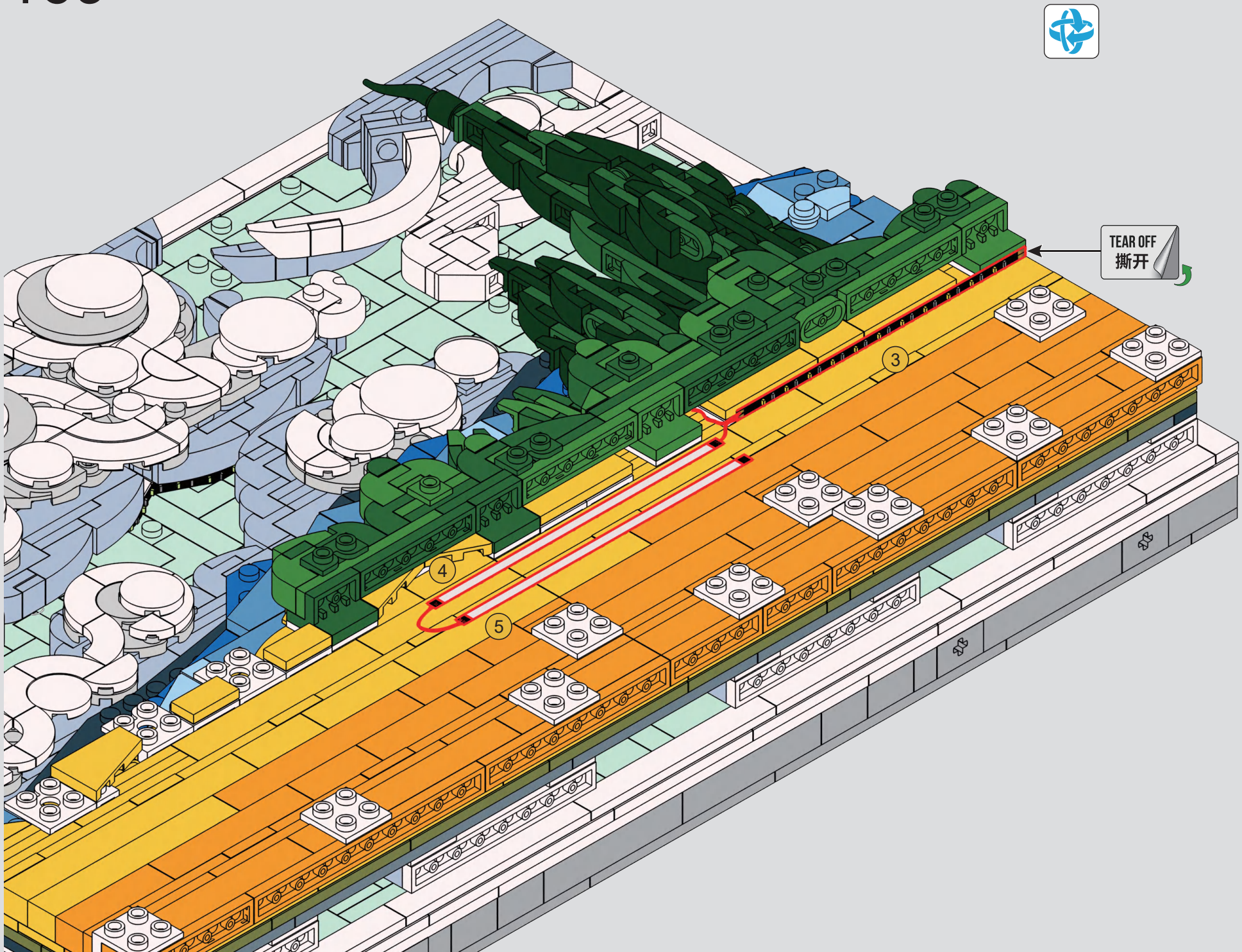

170

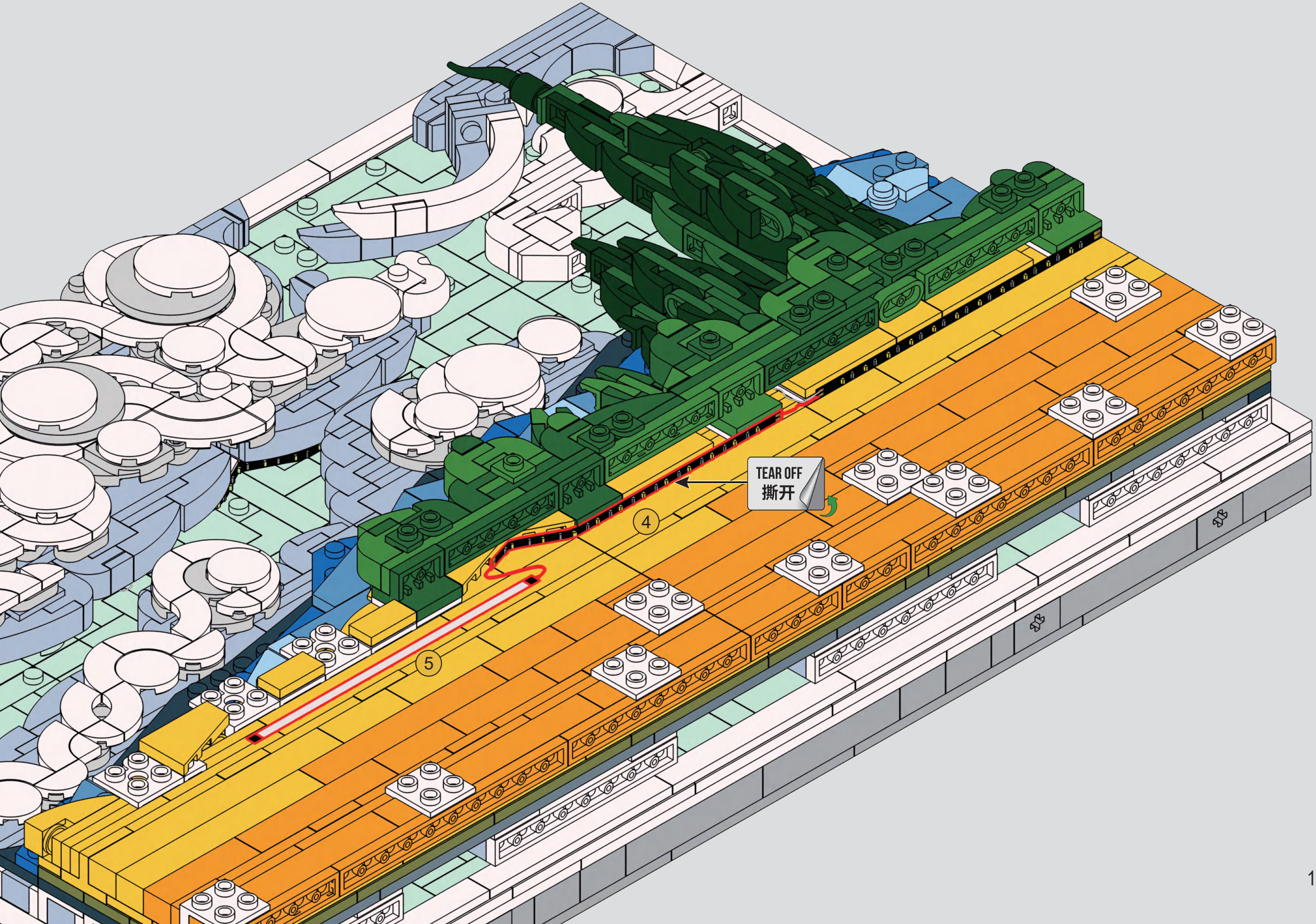

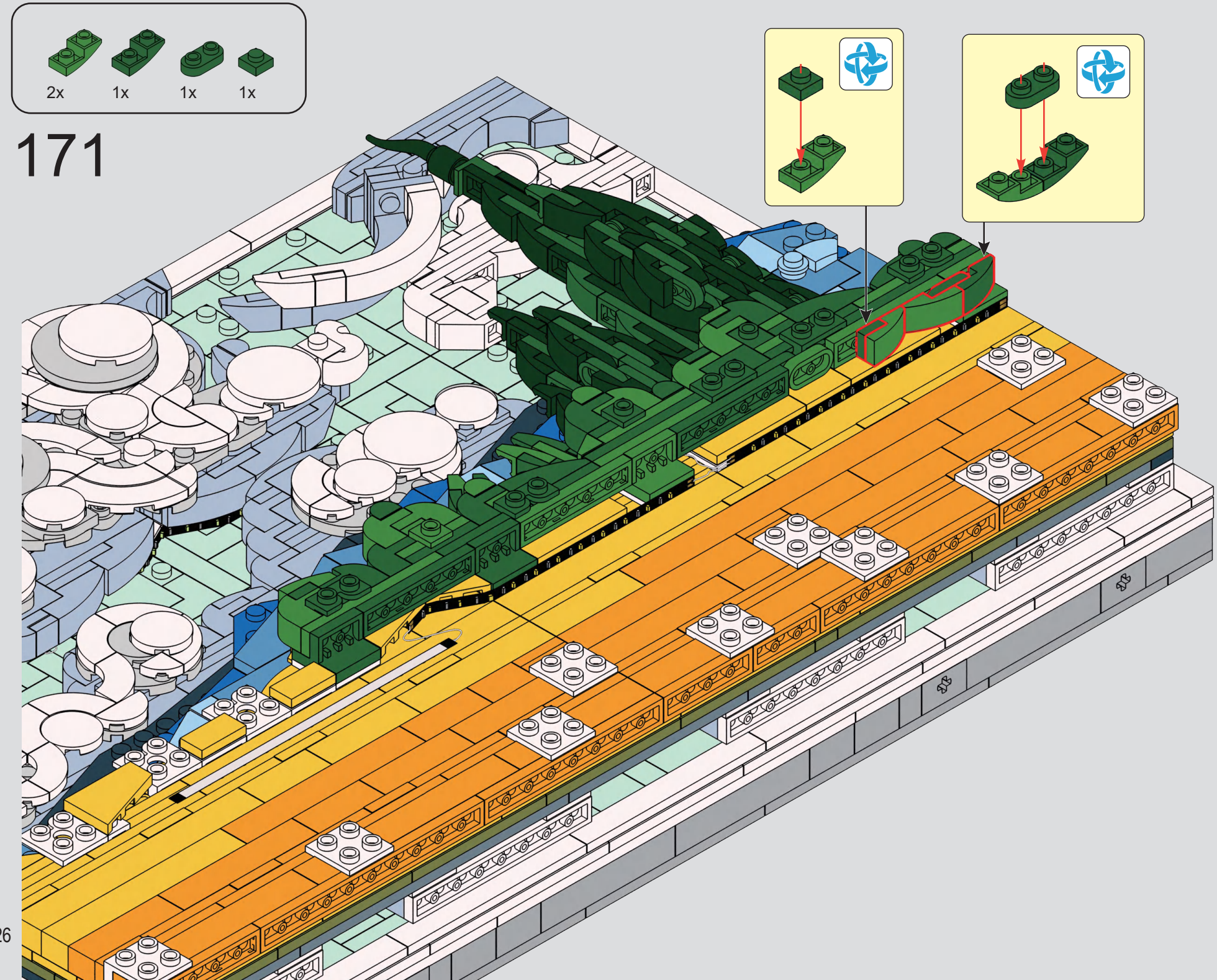
2x
1x
1x
1x
171

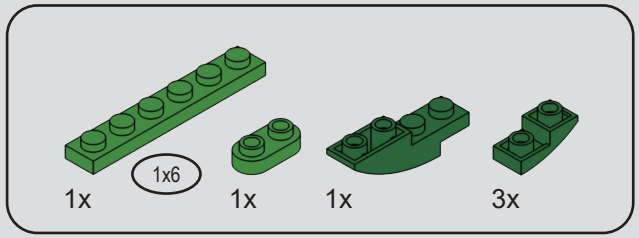

172

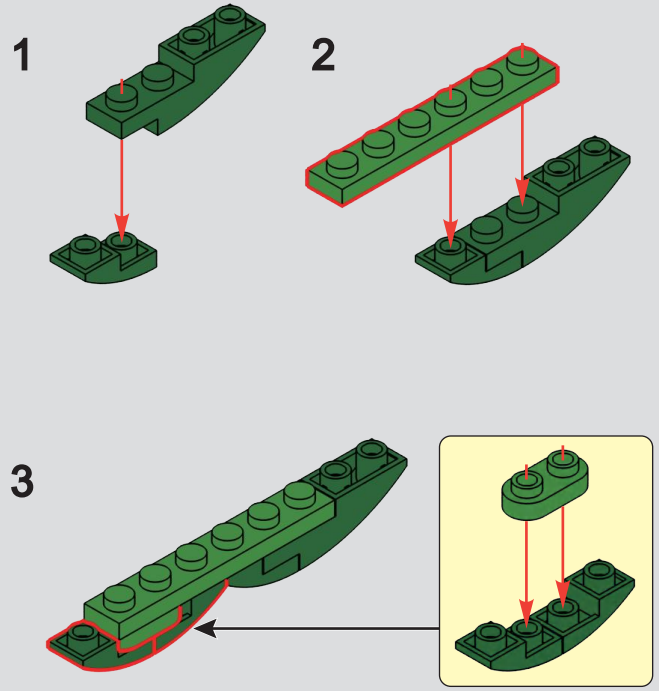

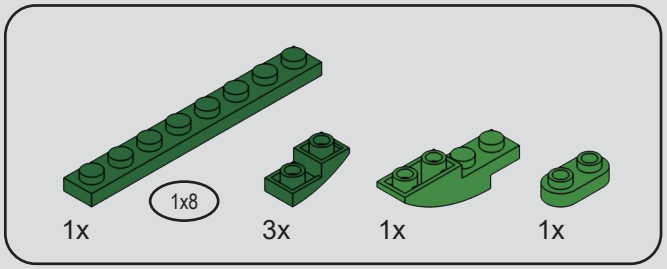

173

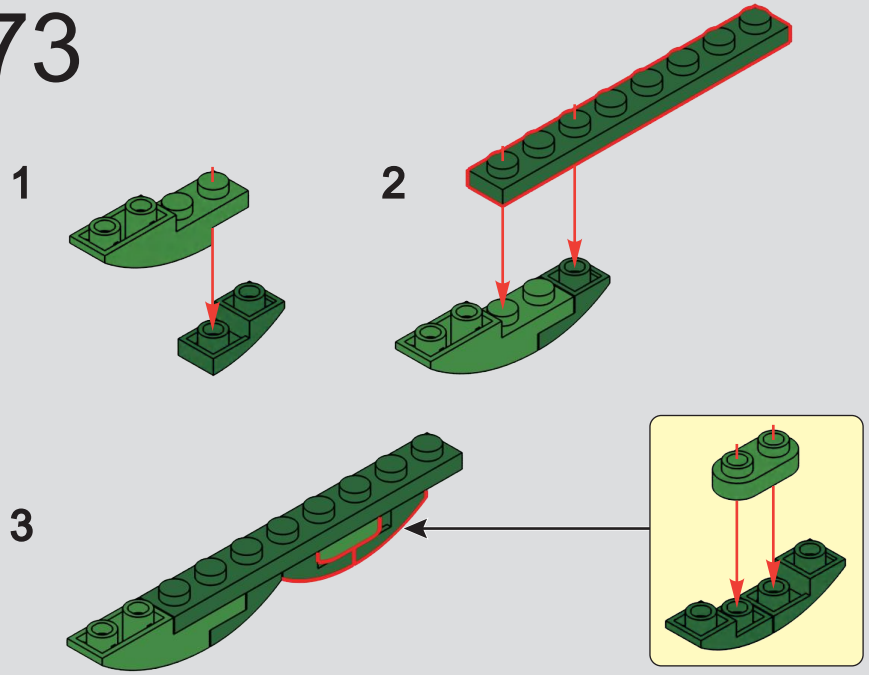

174

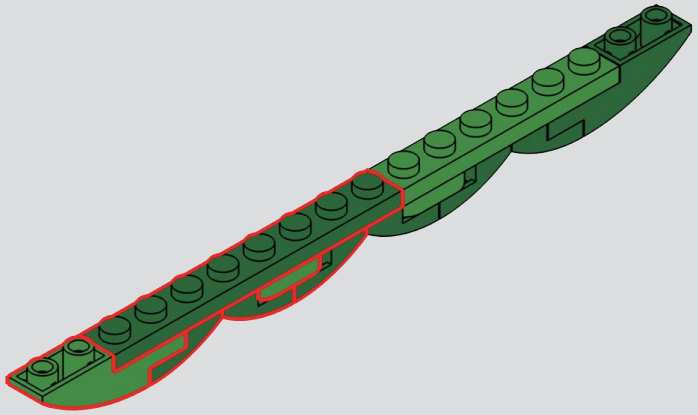

175

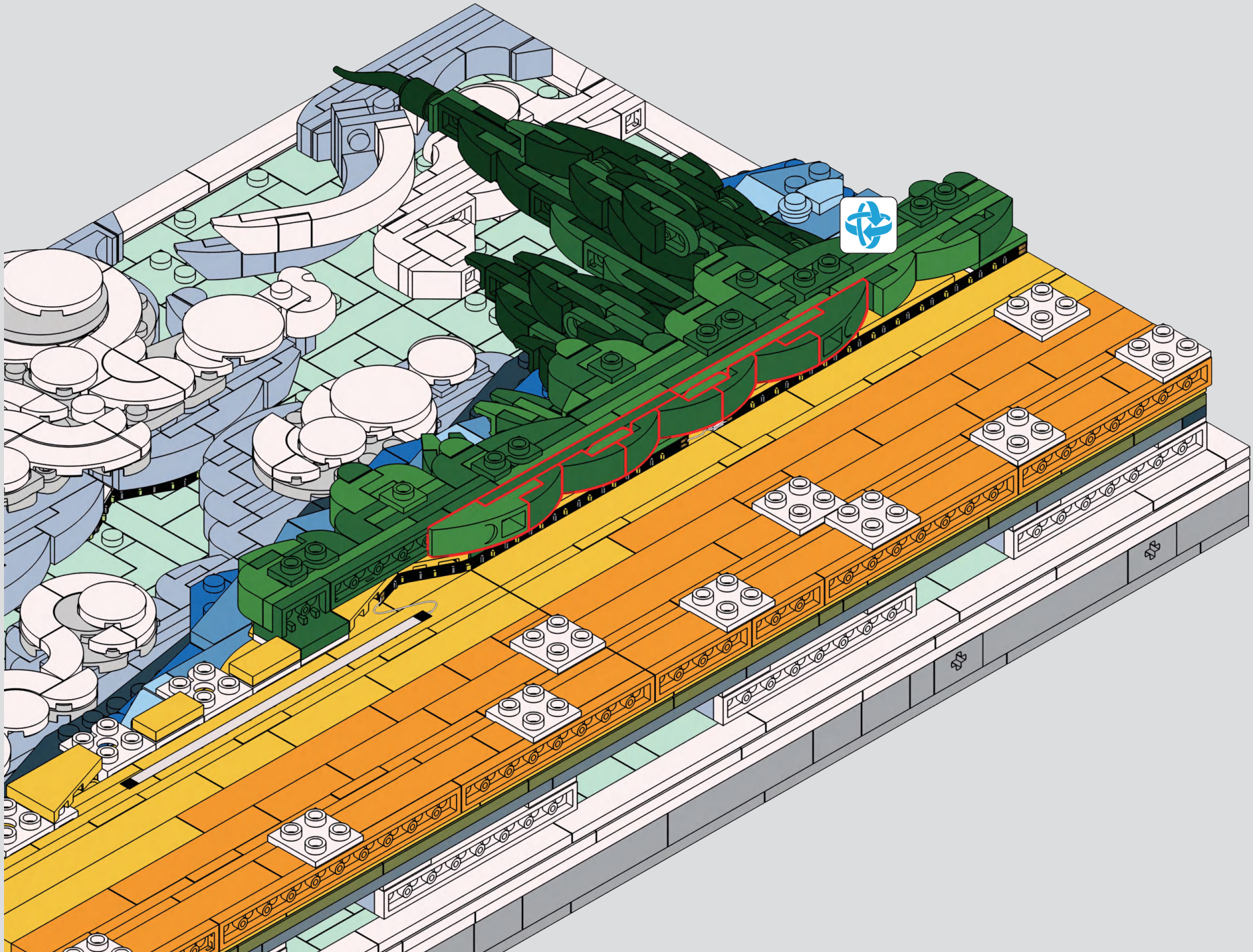

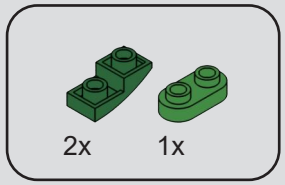

176

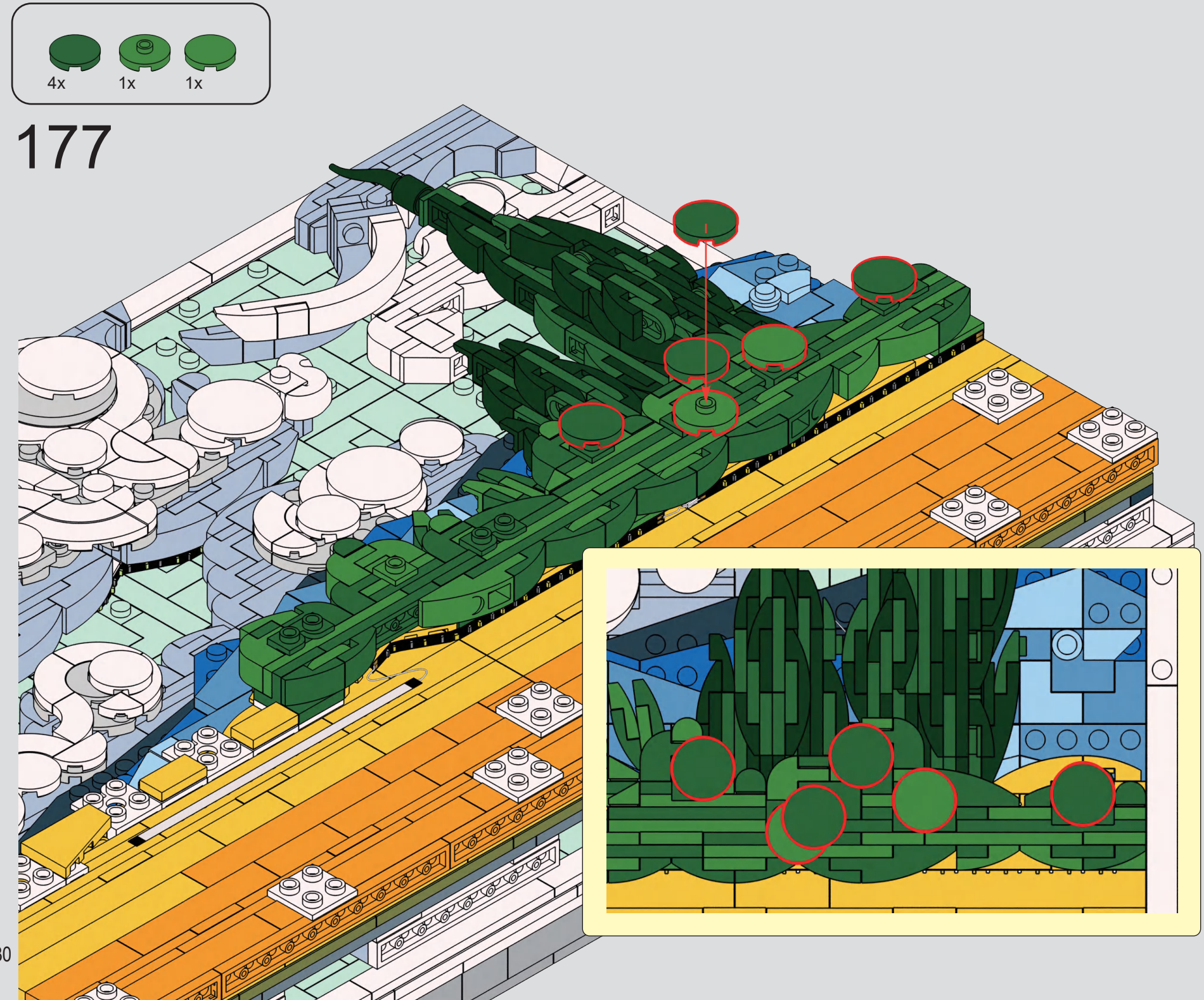

177

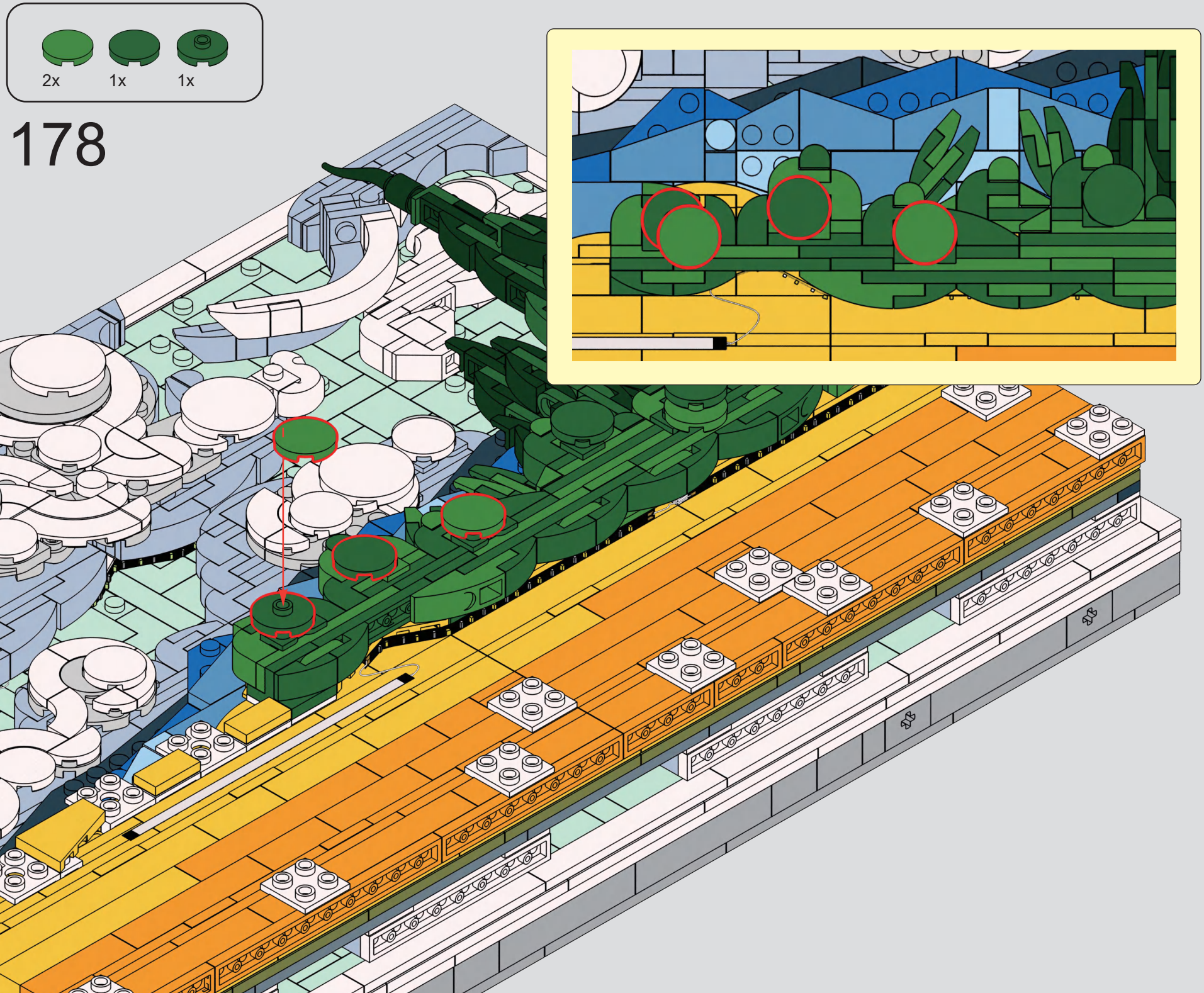
2x
1x
1x
178

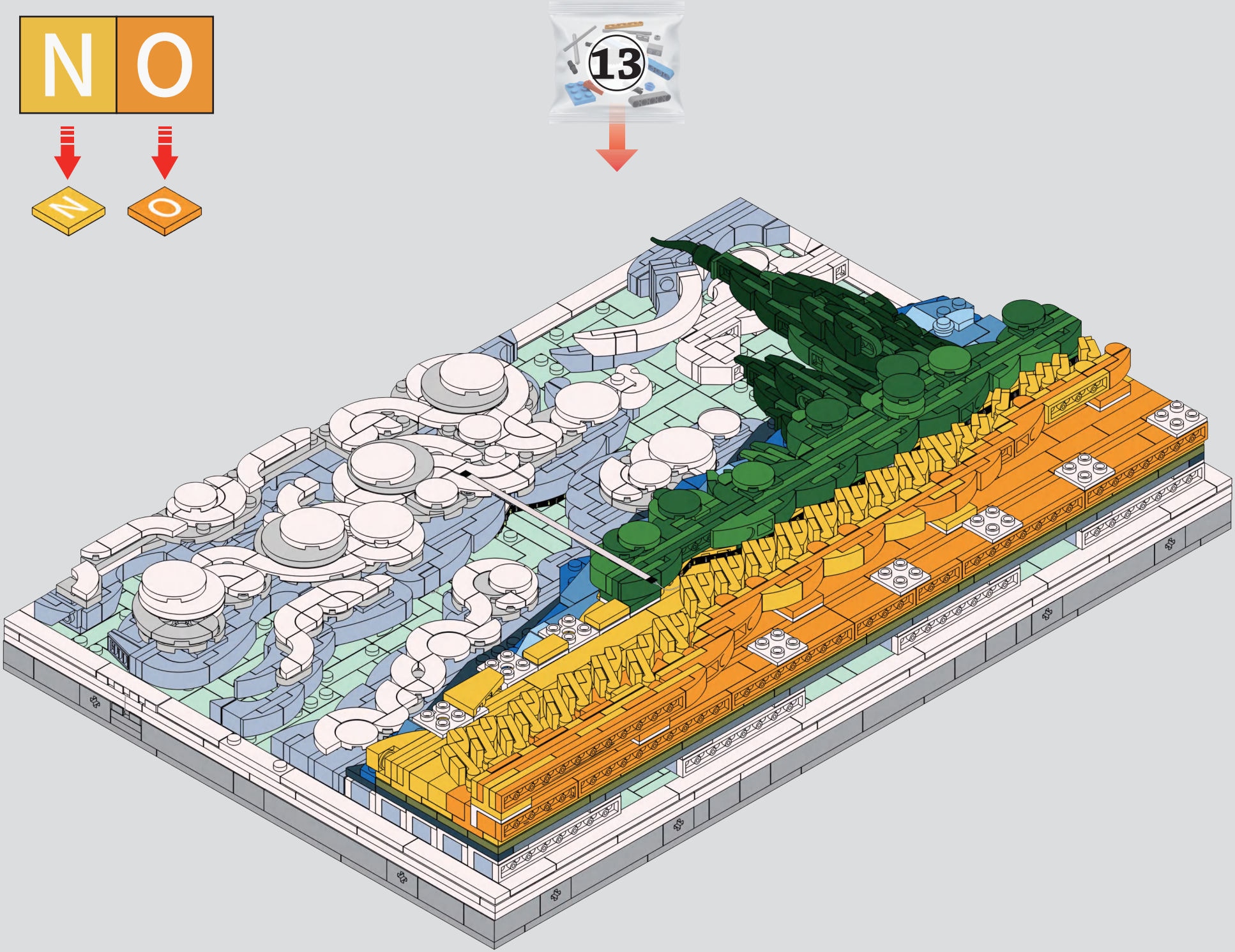
NO
N
O
13

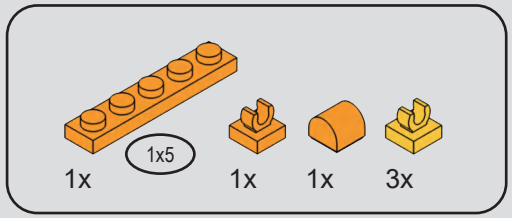

179

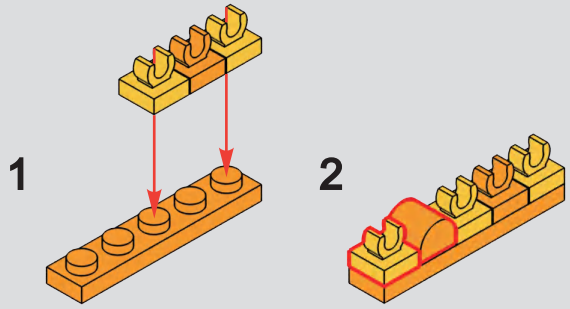

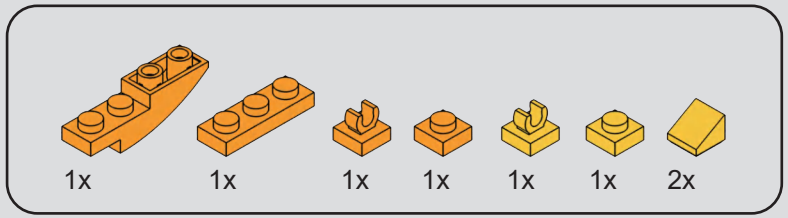

180

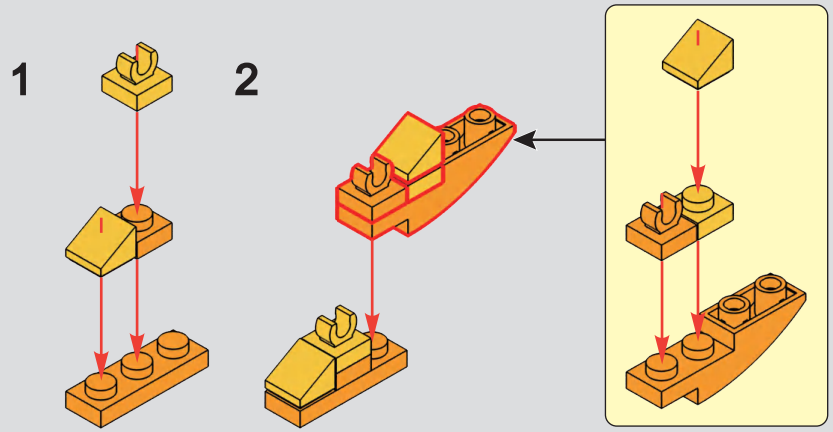

181

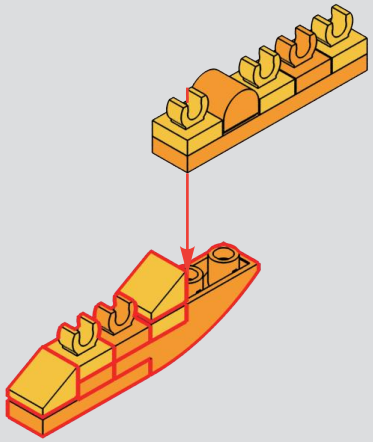

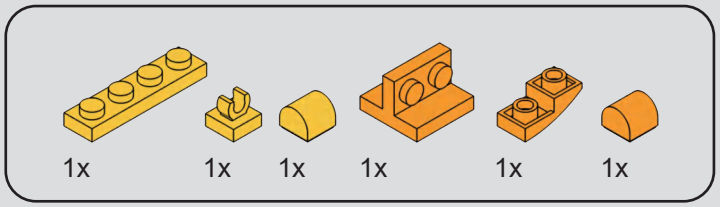

182

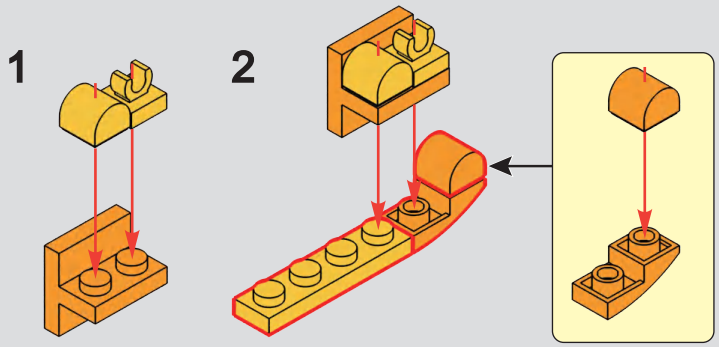

183

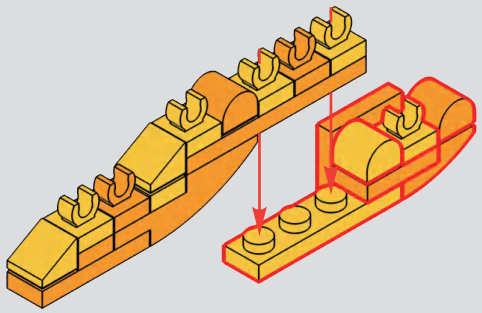

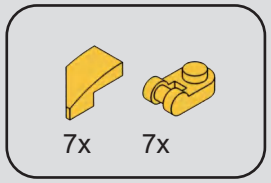

184

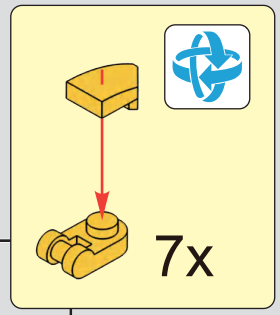

1

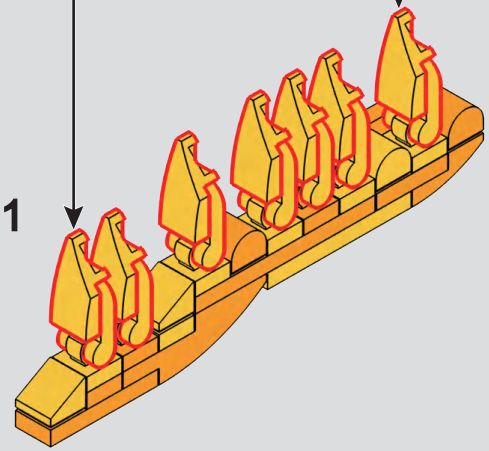

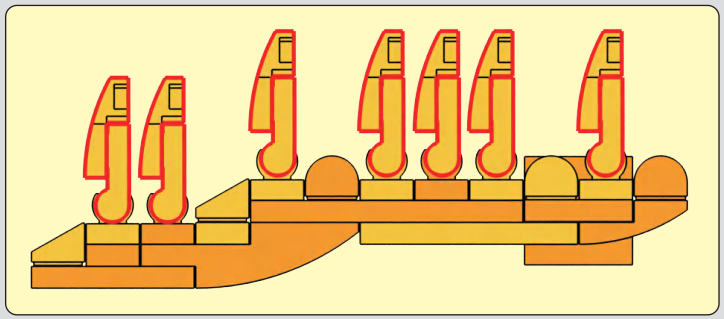

2

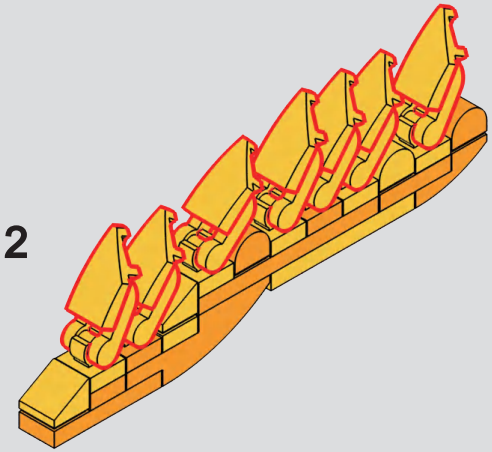

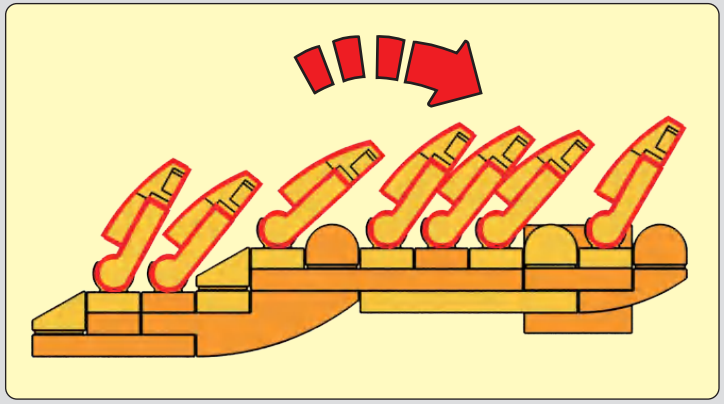

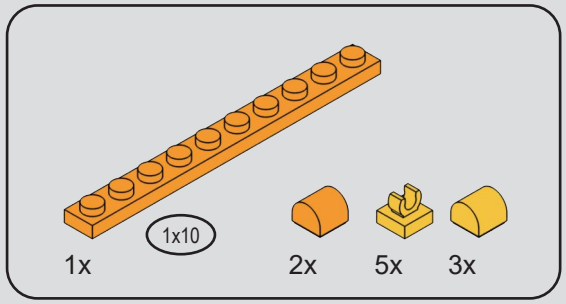

185

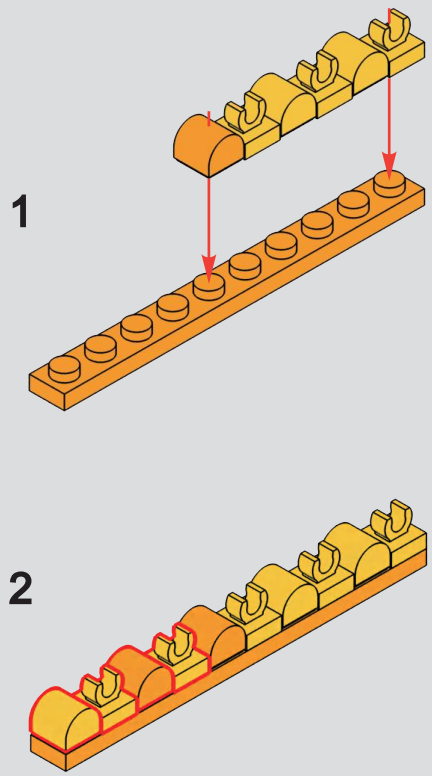

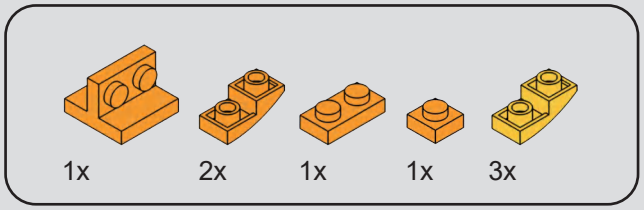

186

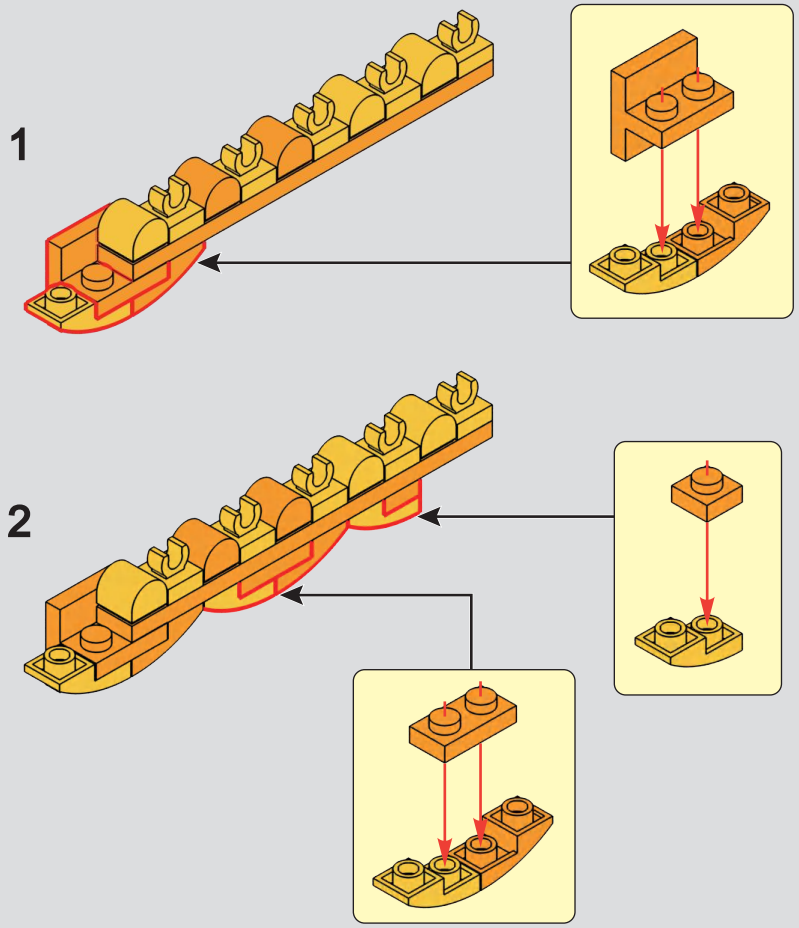

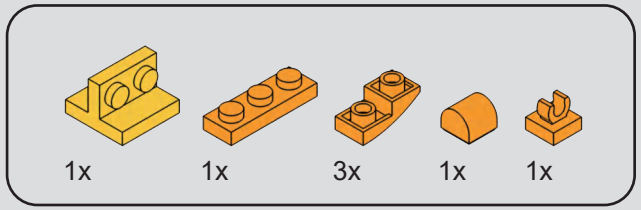

187

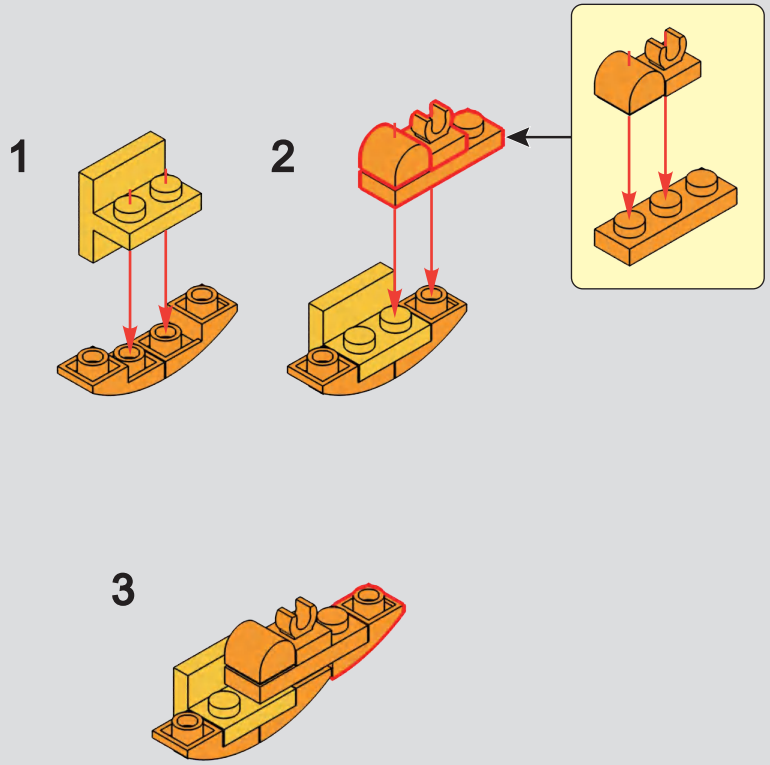

188

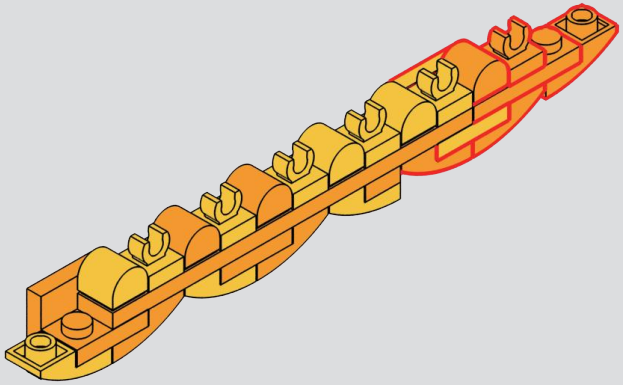

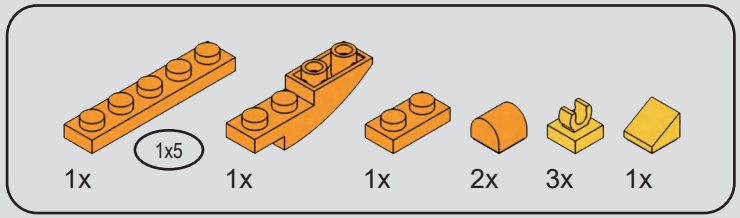

189

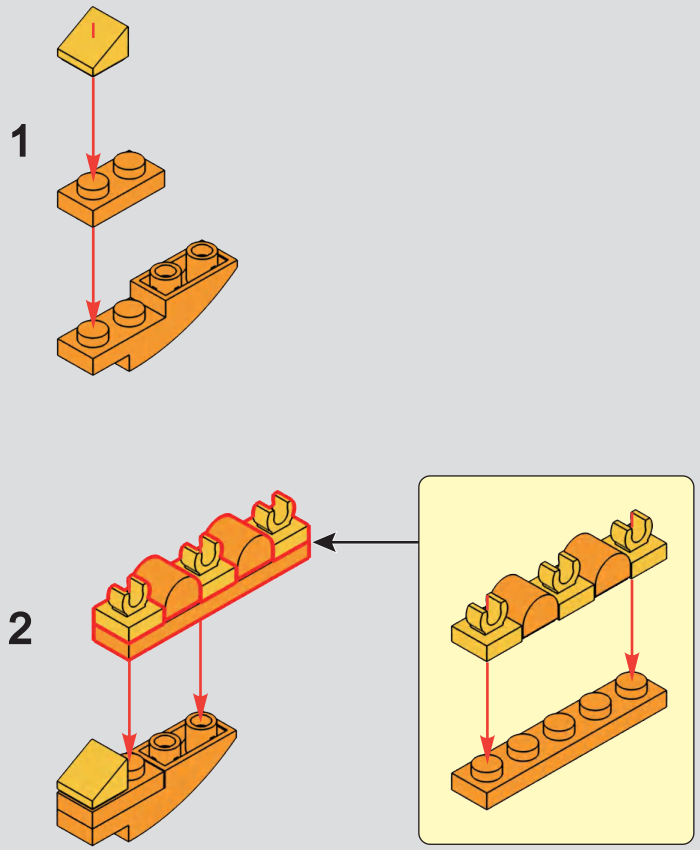

190

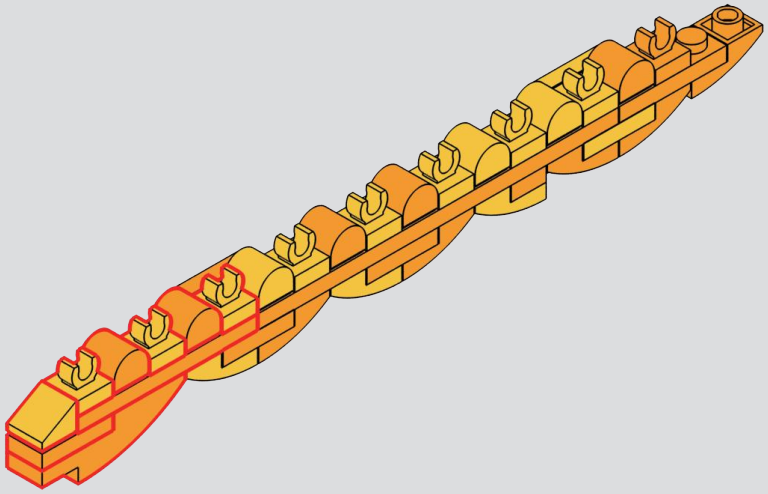

191

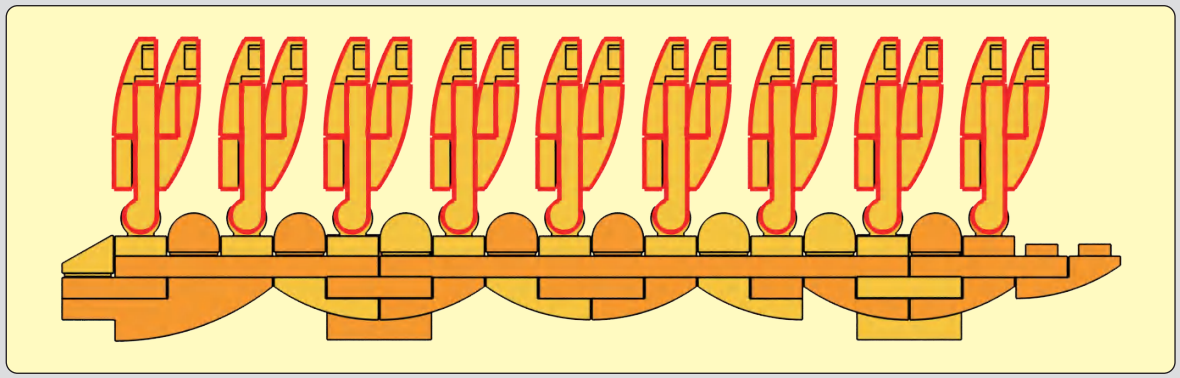

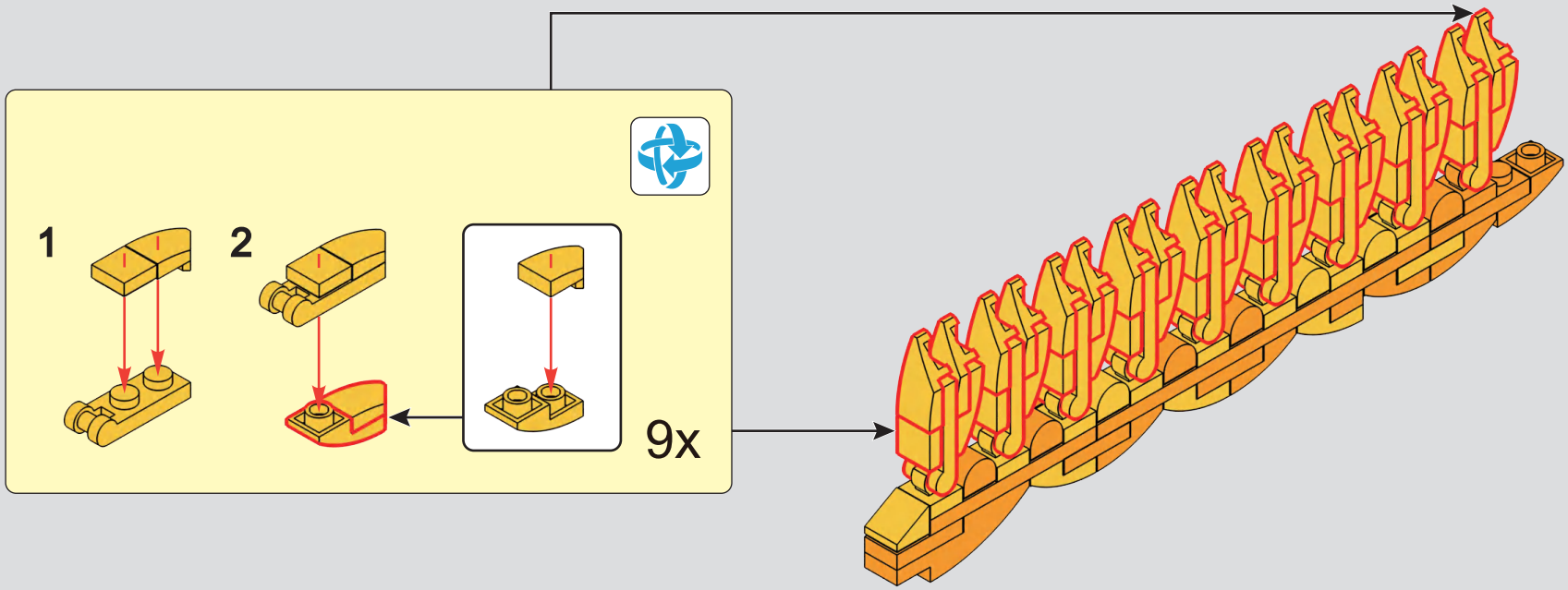

192

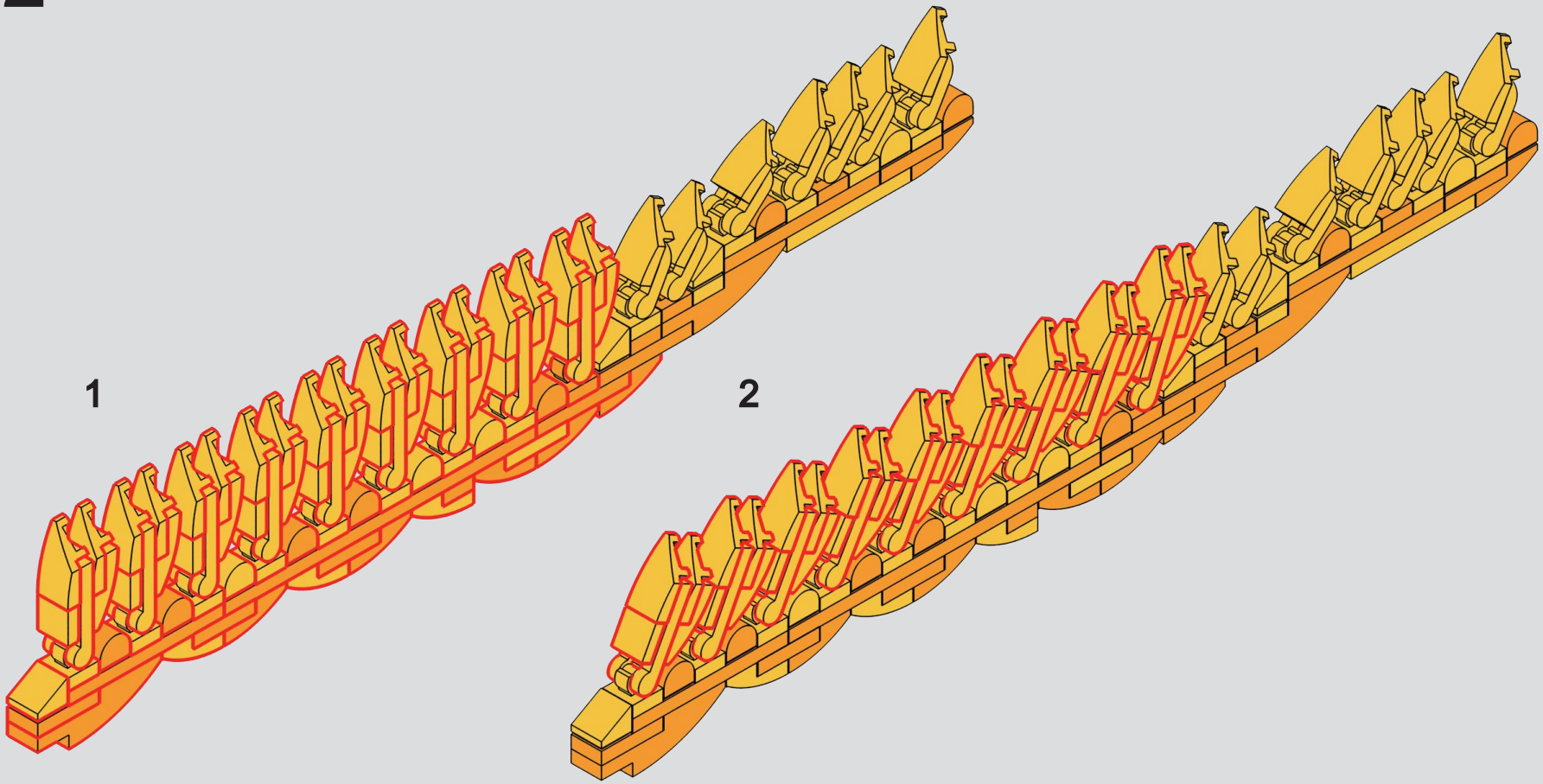

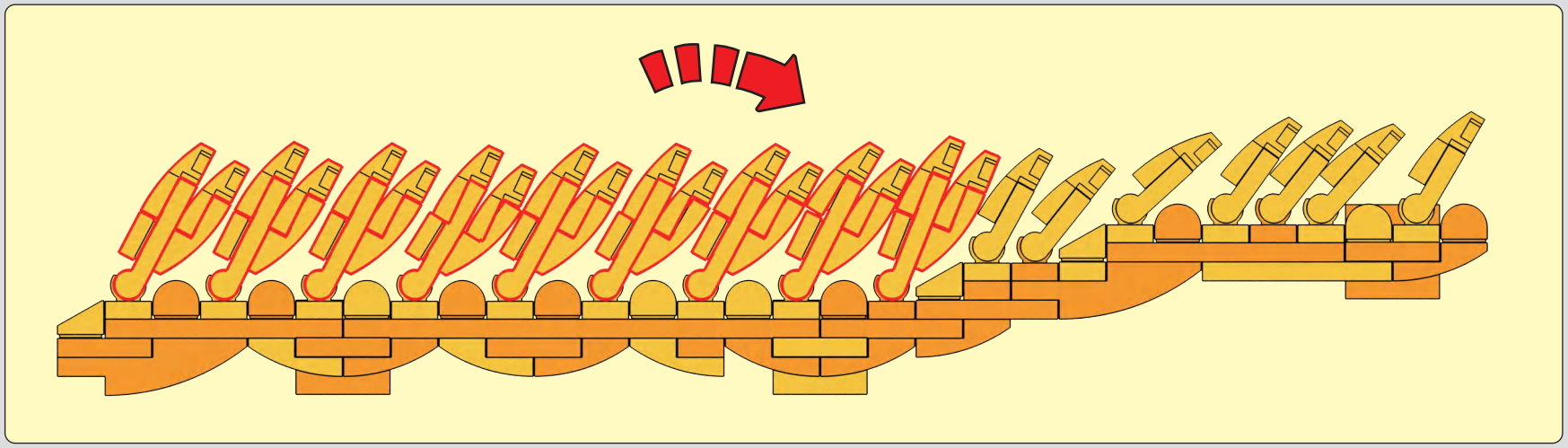

193

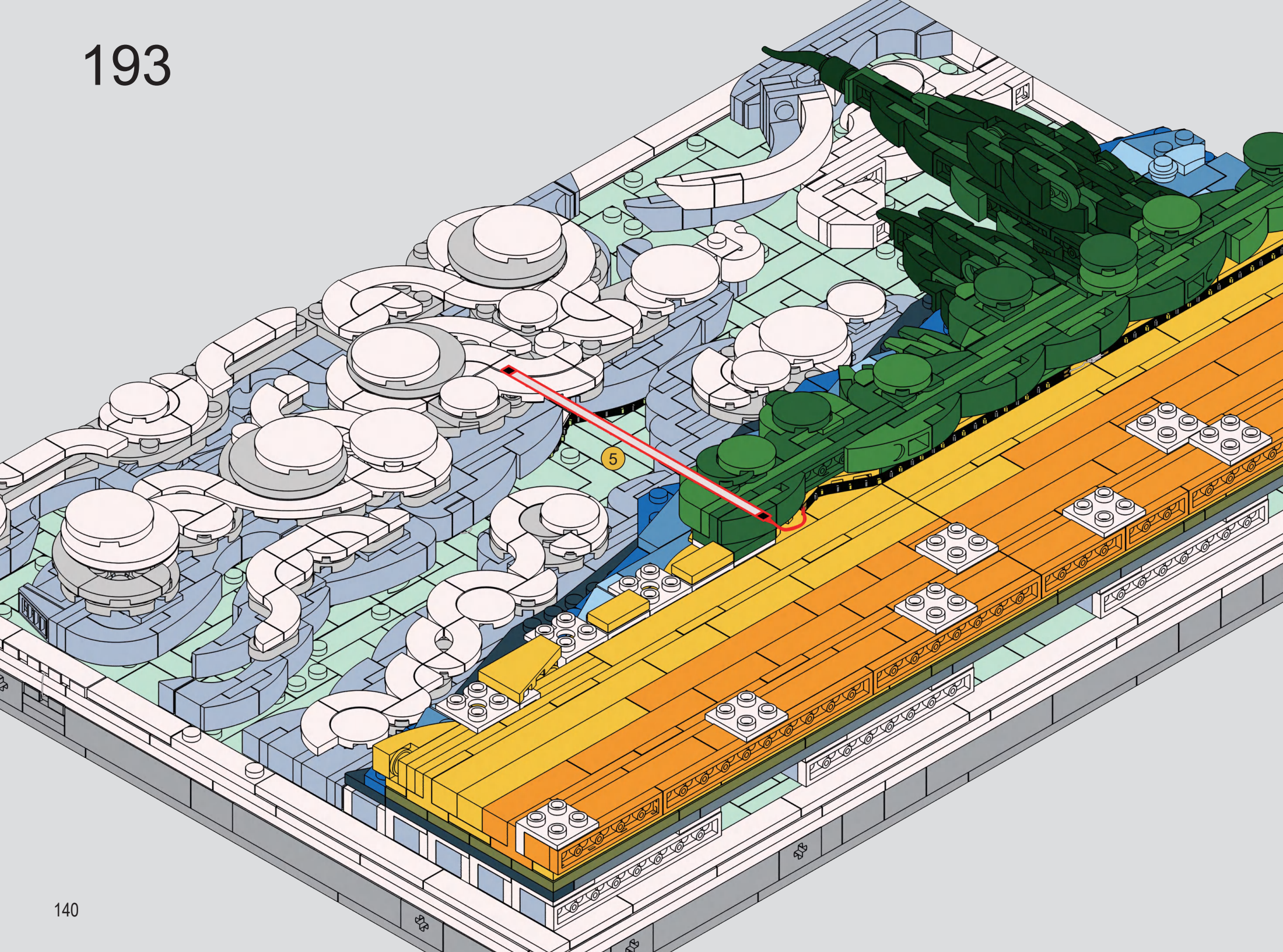

194

1

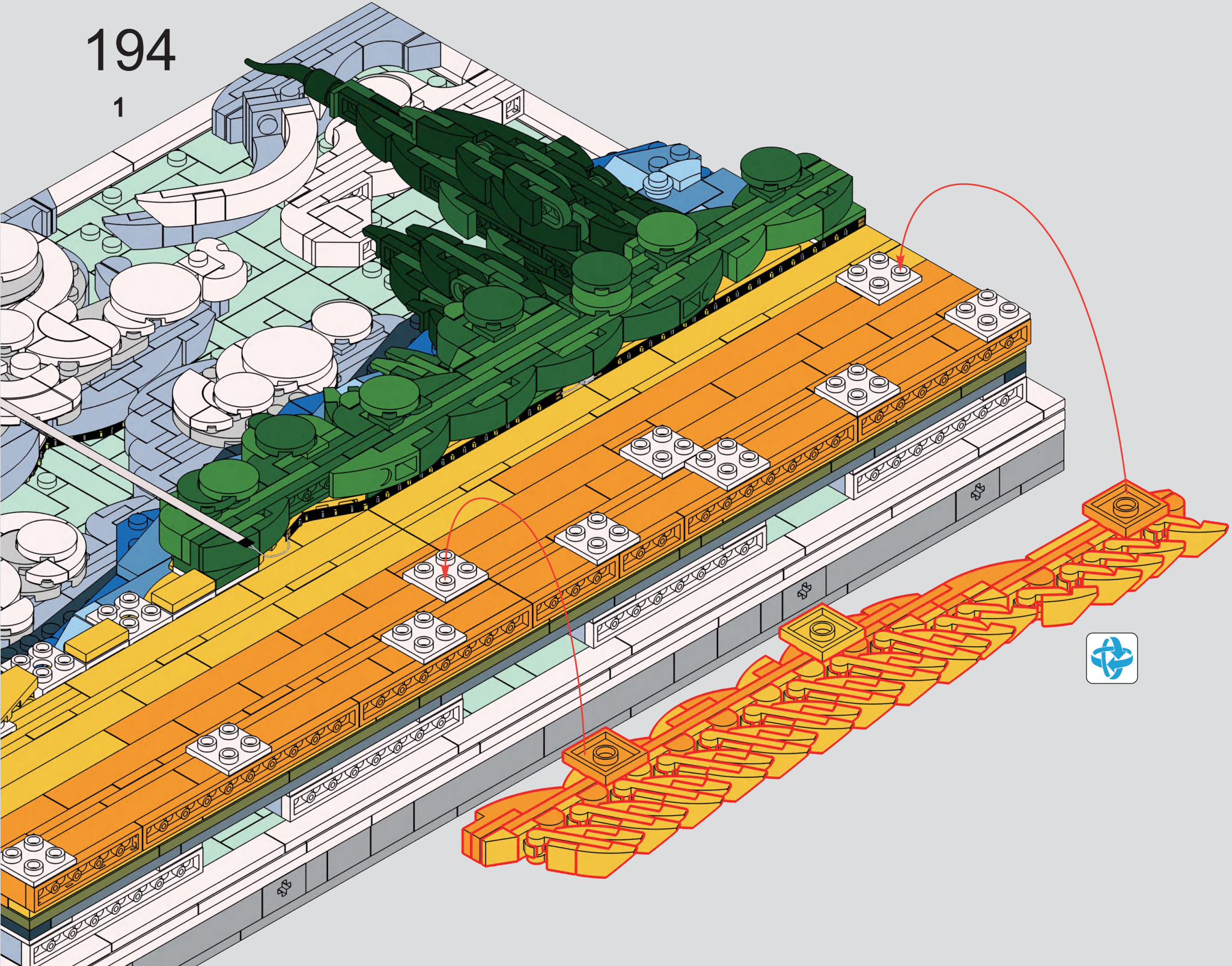

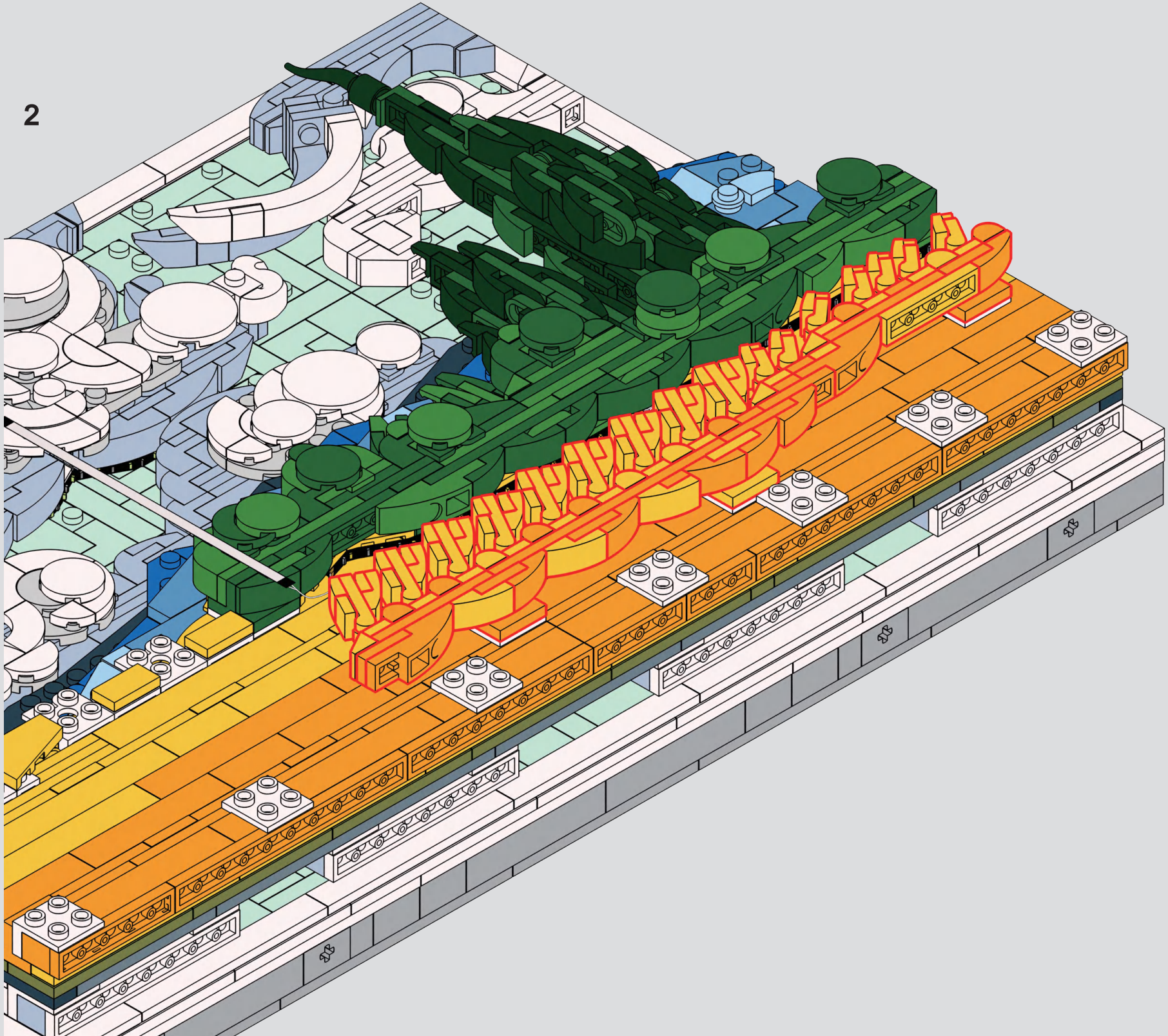
2

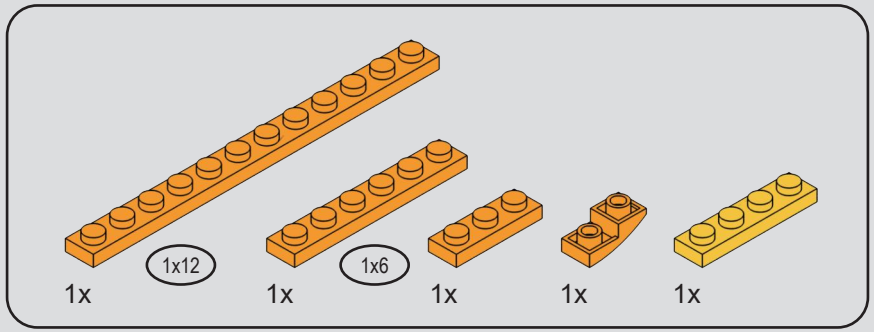

195

Check the color.
核对颜色。

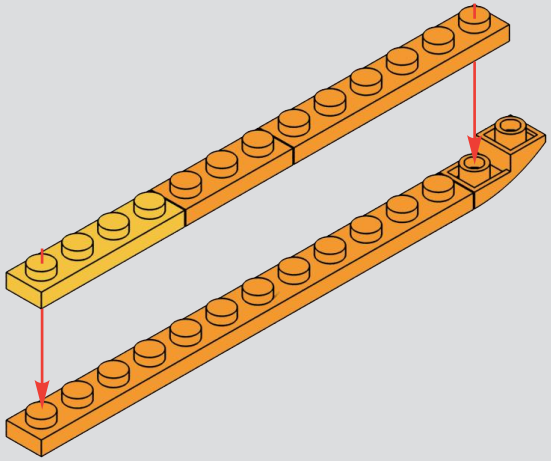

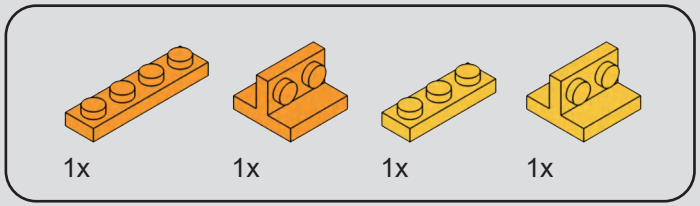

196

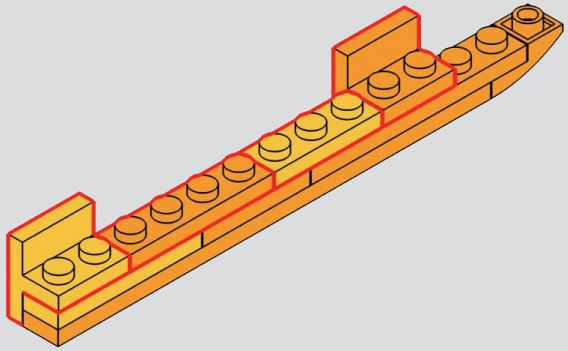

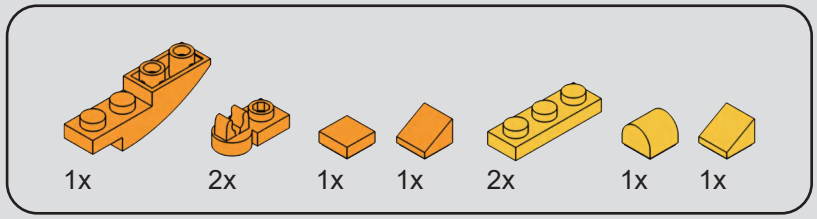

197

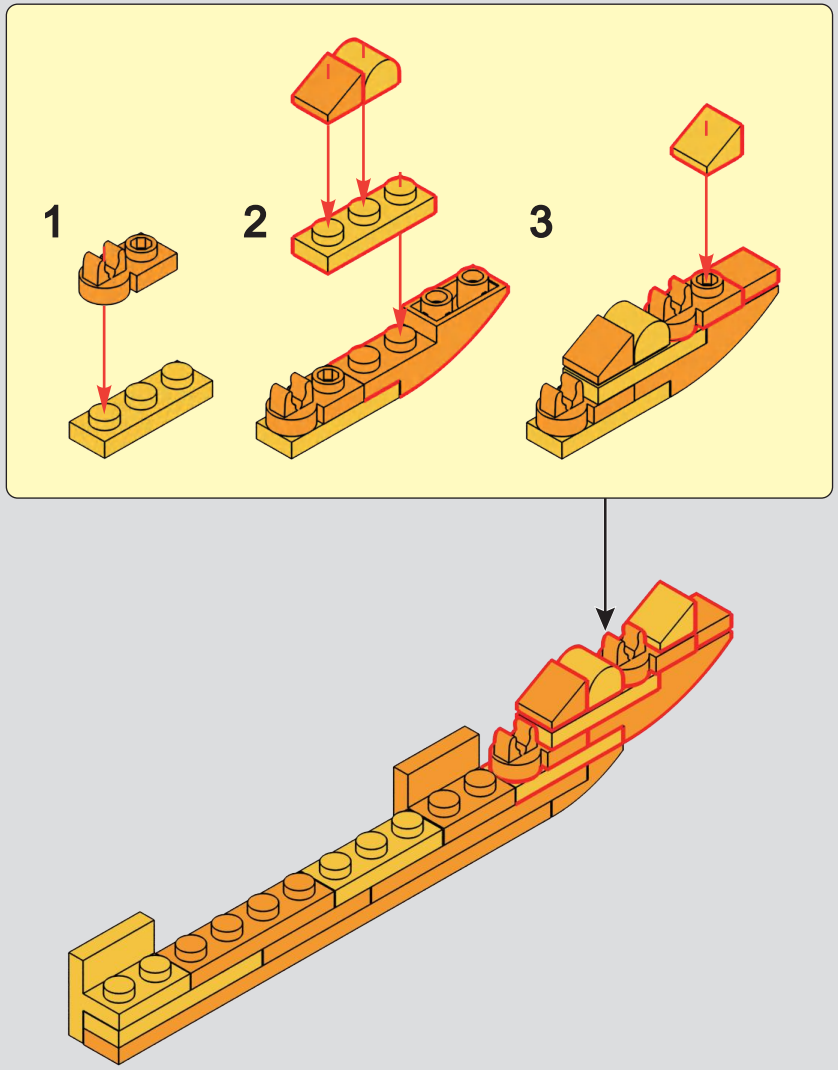

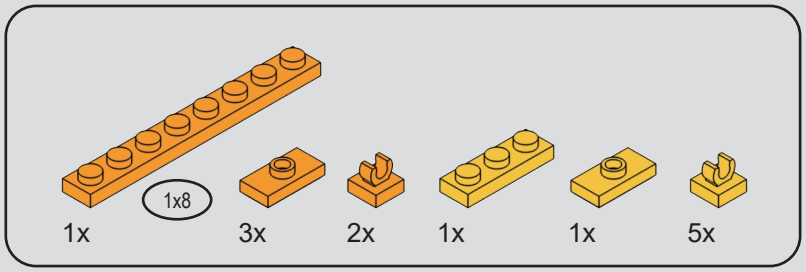

198

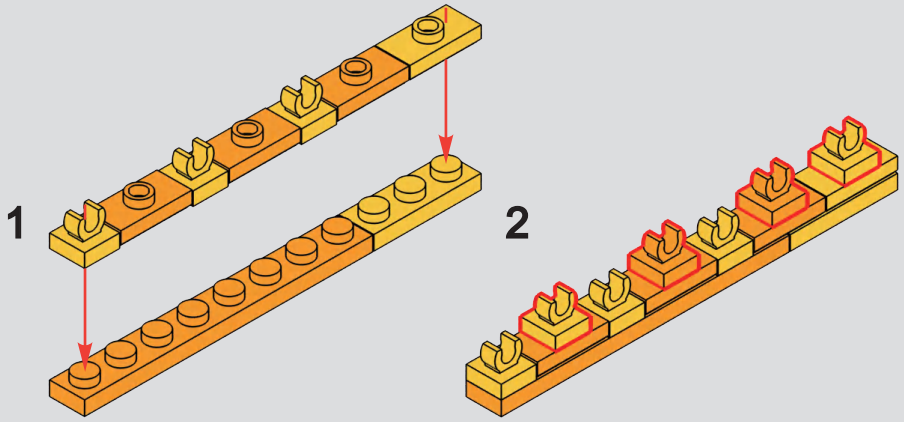

199

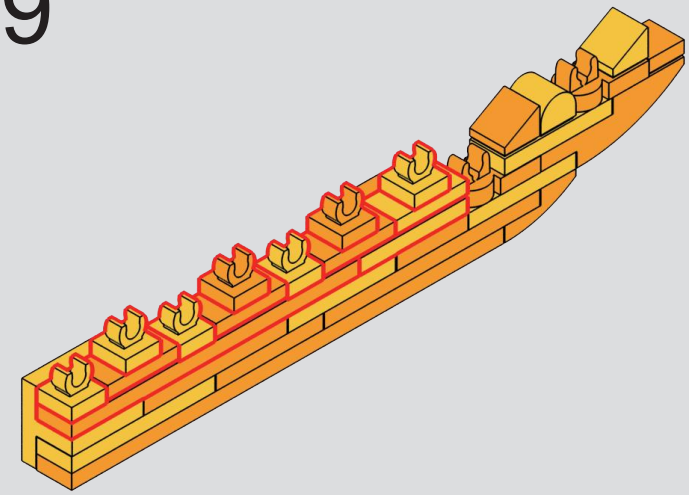

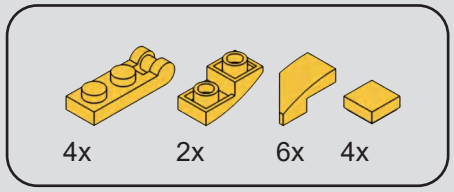

200

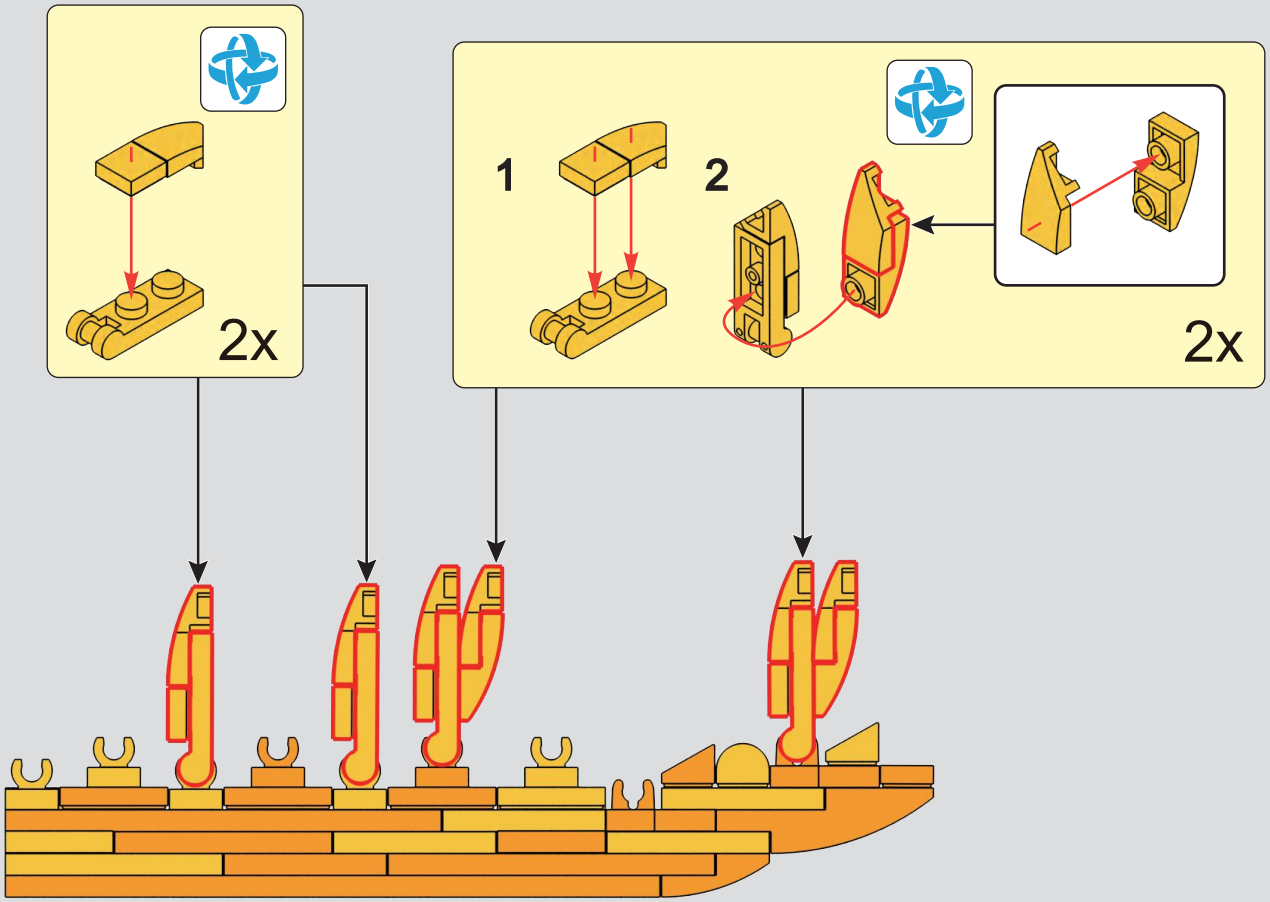

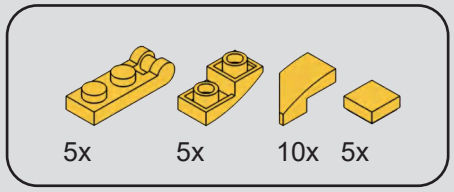

201

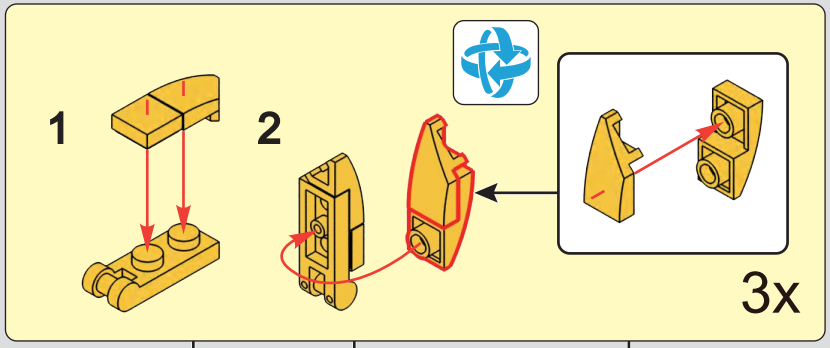

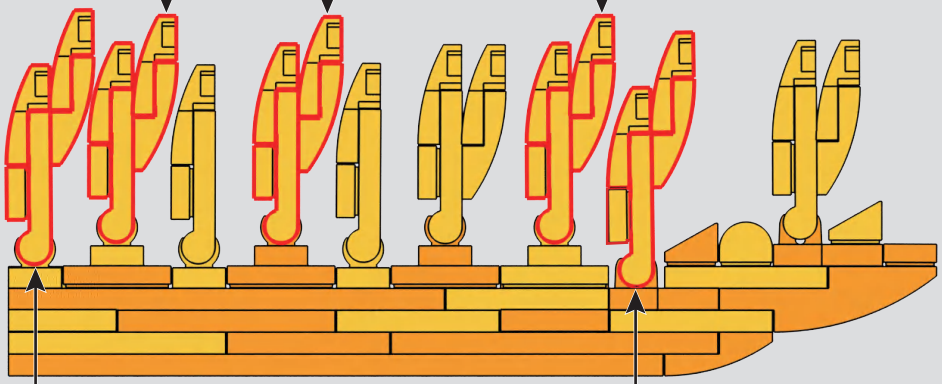

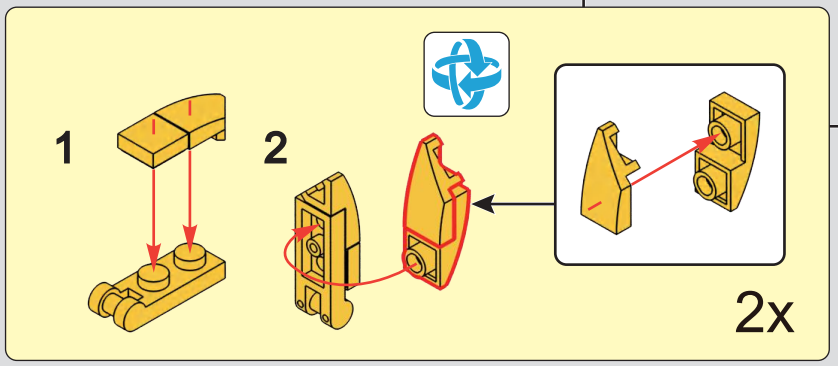

202

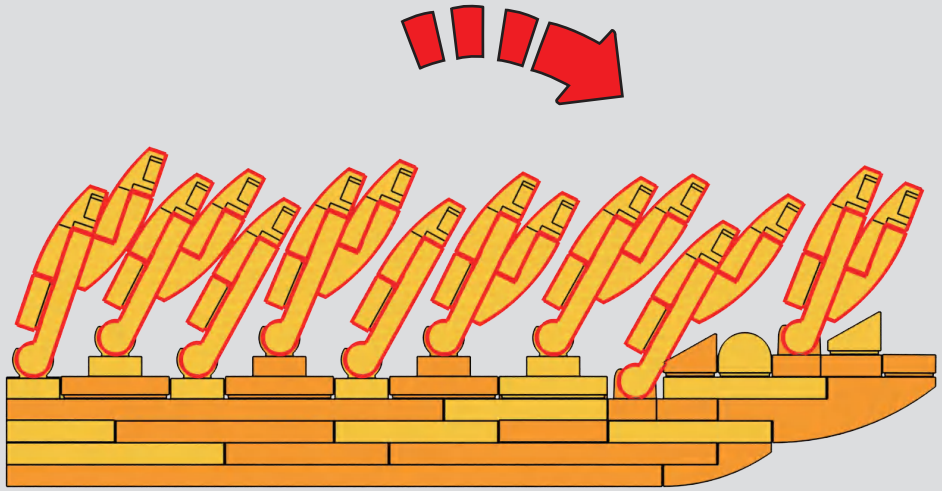

203

1

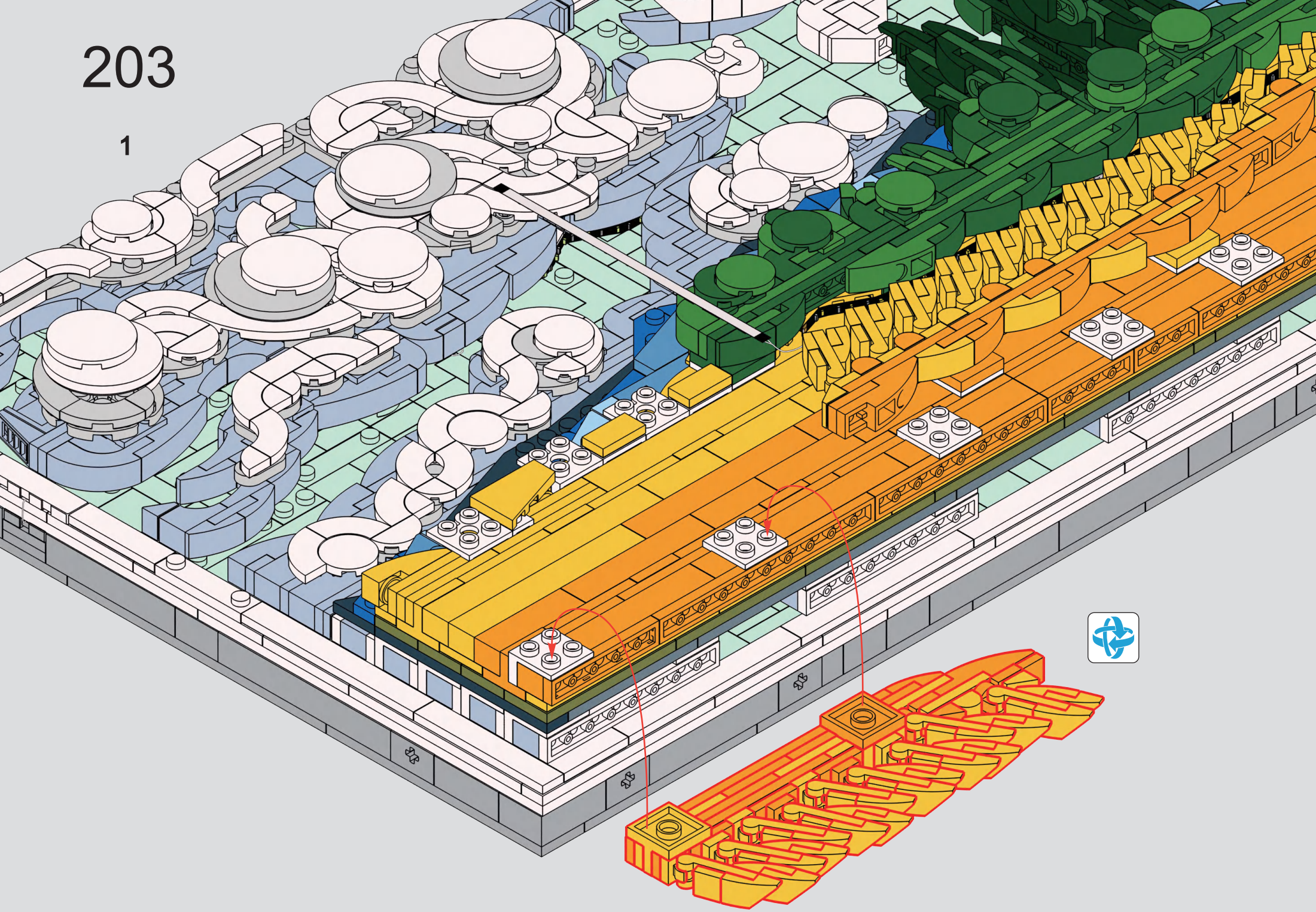

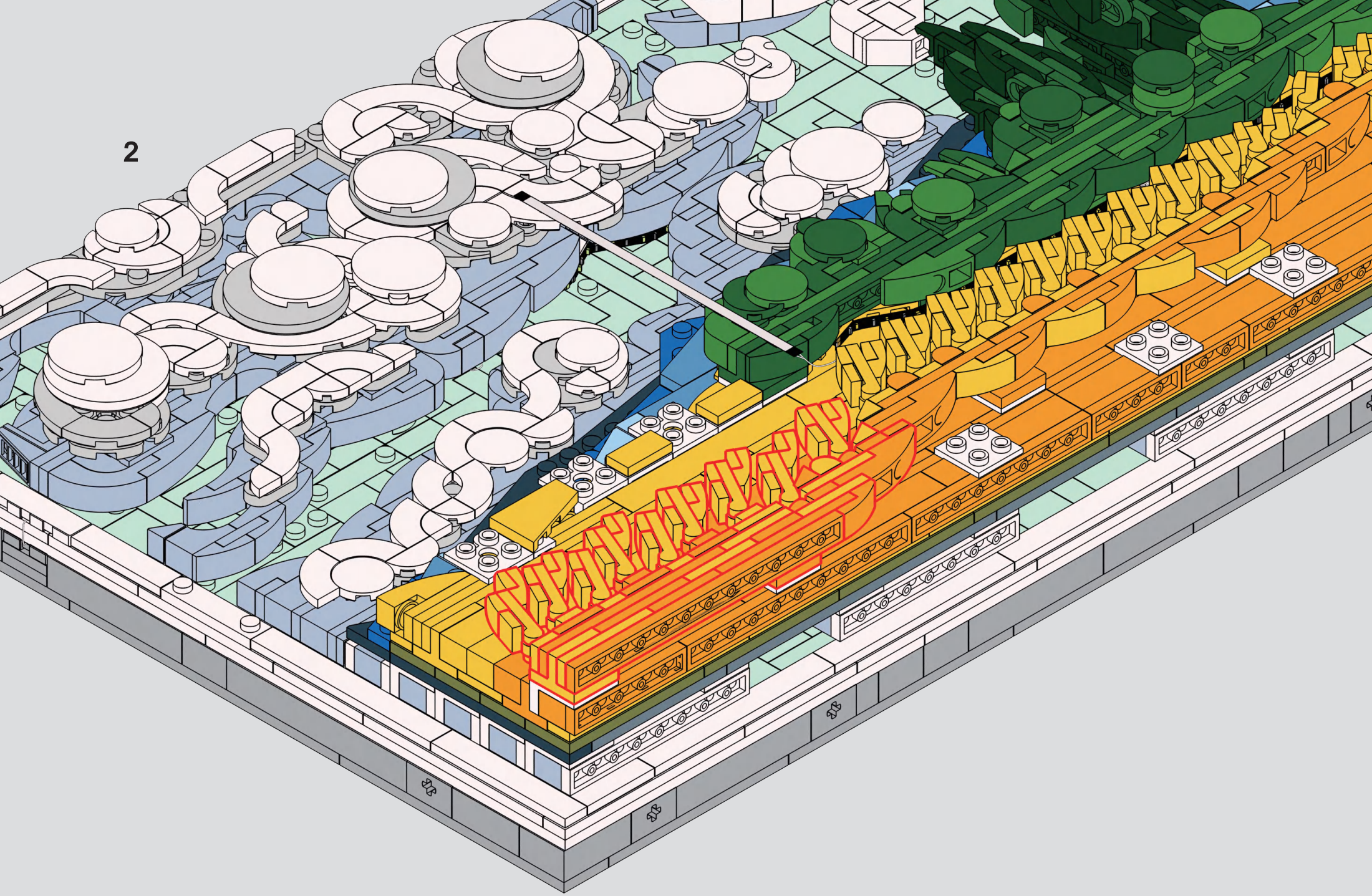
2

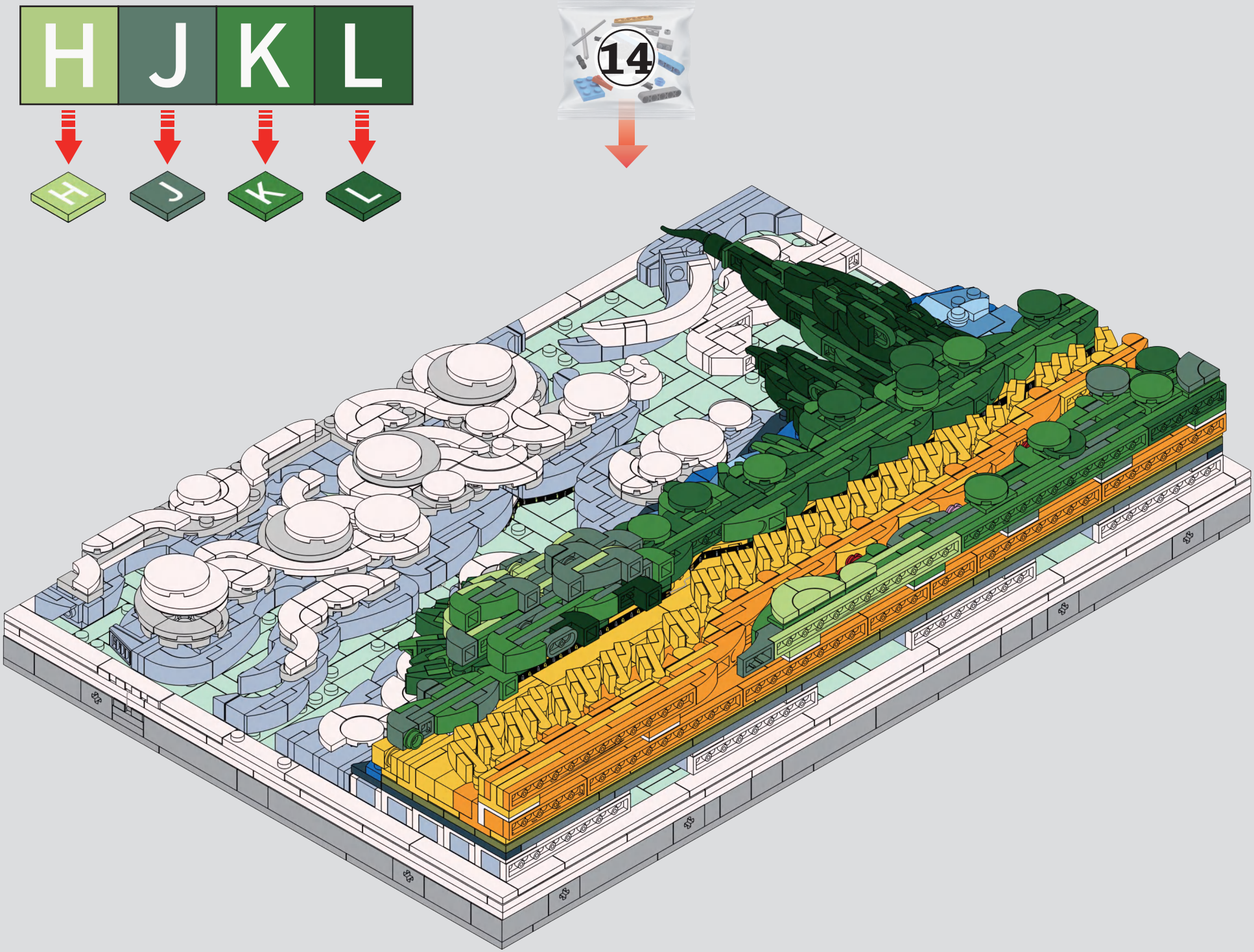
H
J
K
L
14

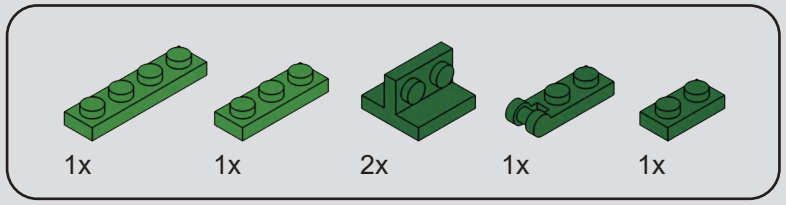

204

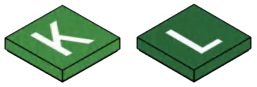

Check the color.
核对颜色。

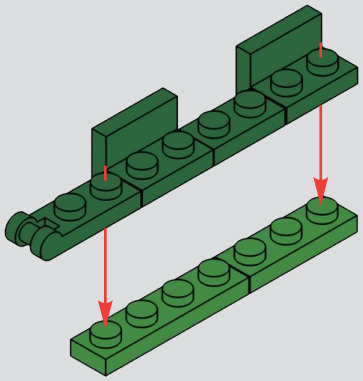

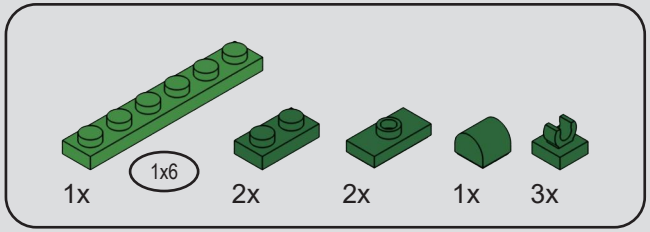

205

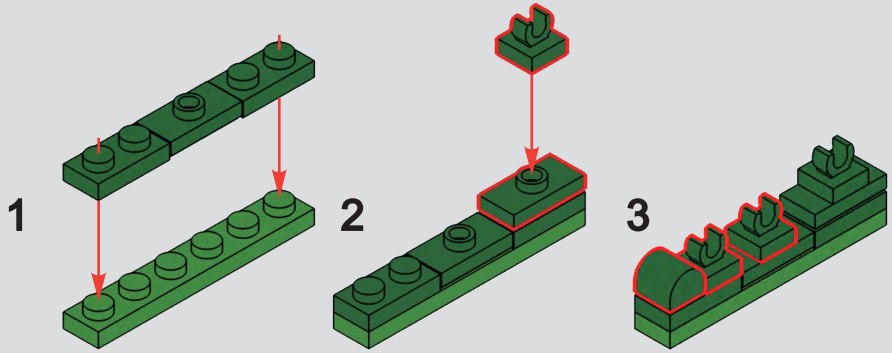

206

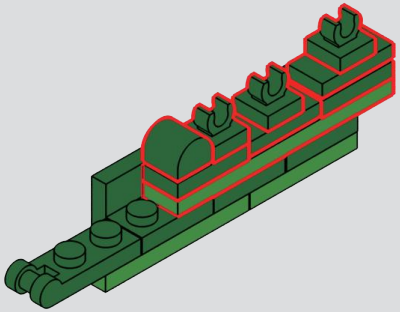

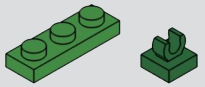

207

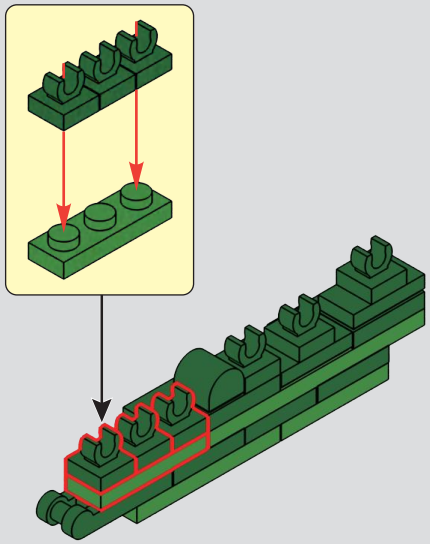

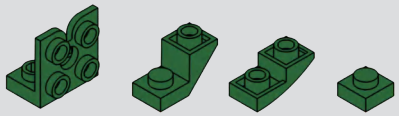

208

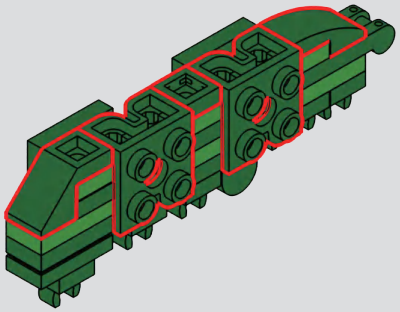

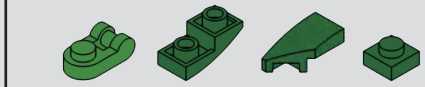

209

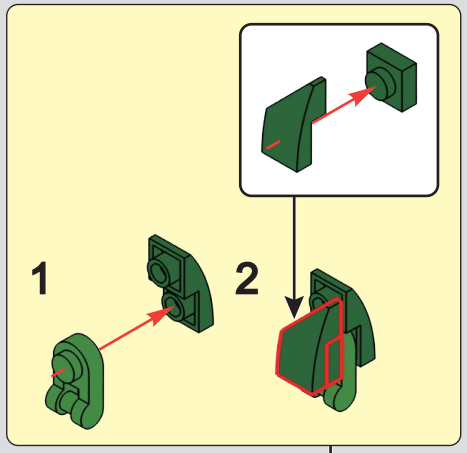

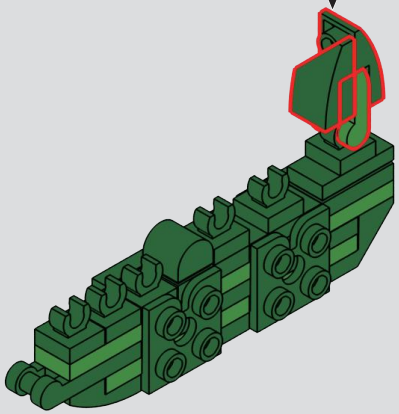

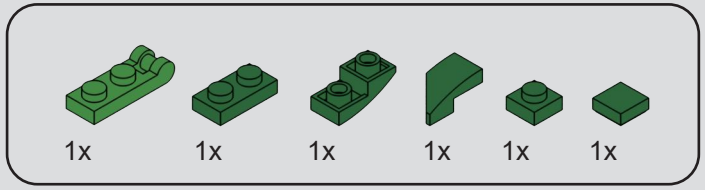

210

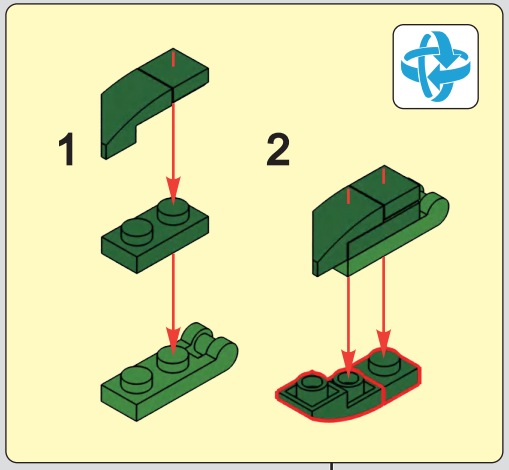

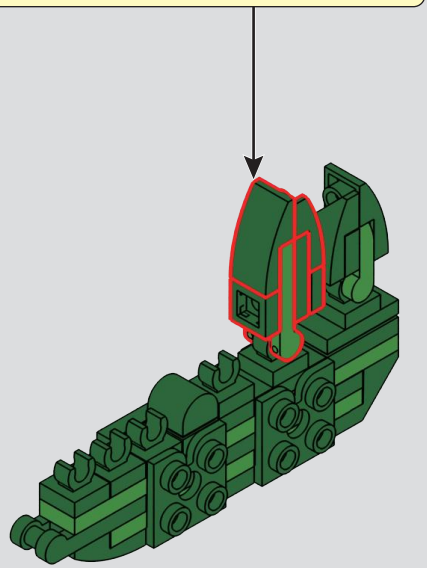

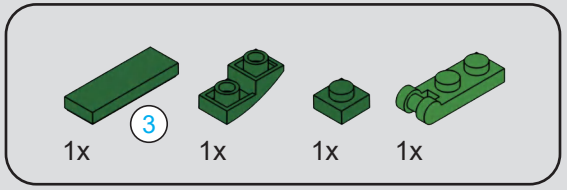

211

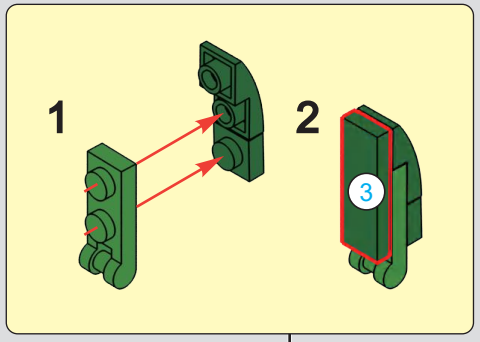

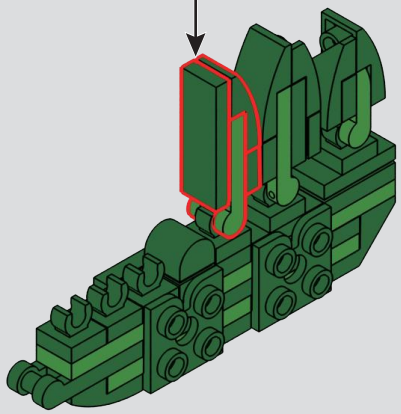

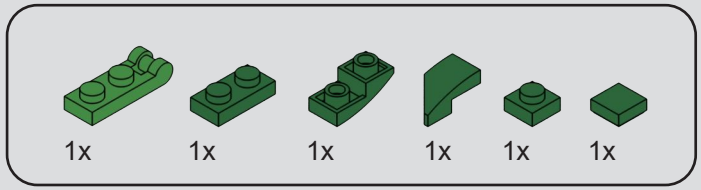

212

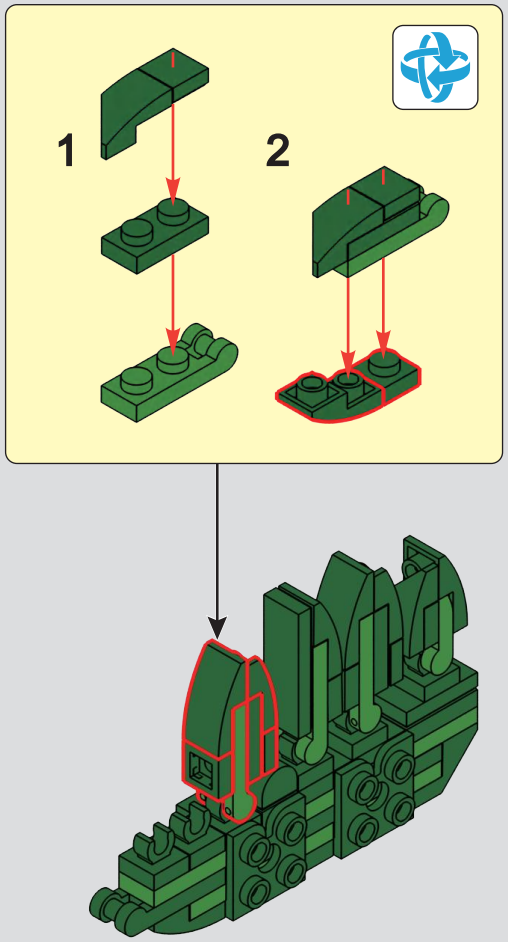

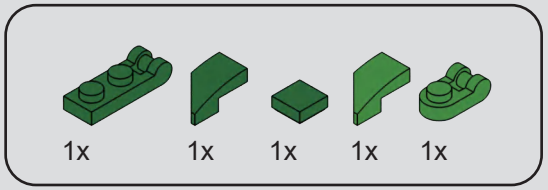

213

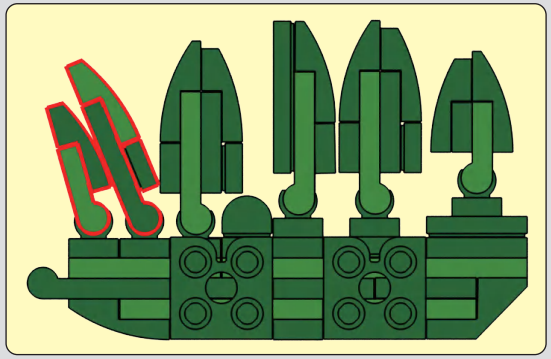

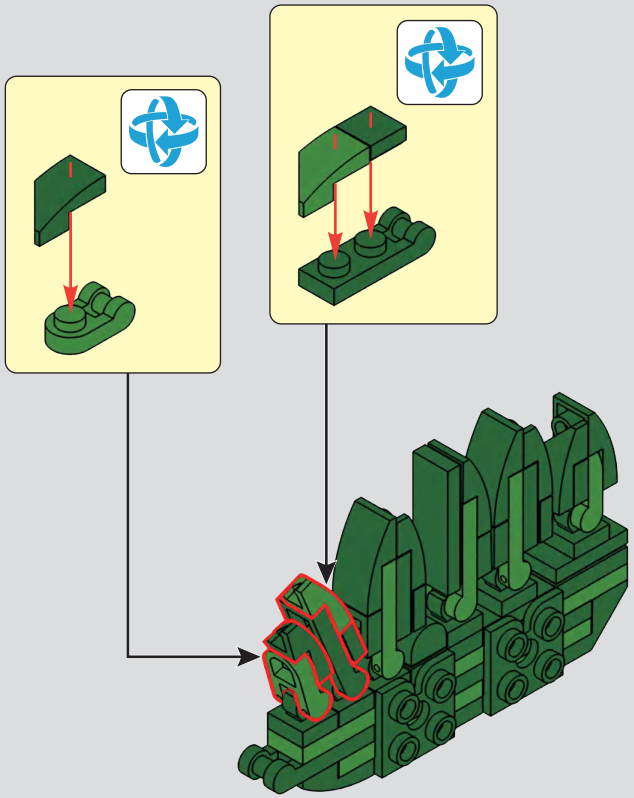

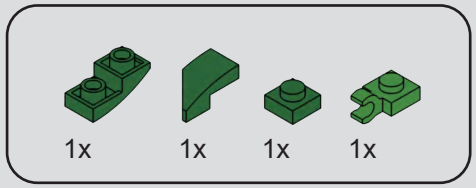

214

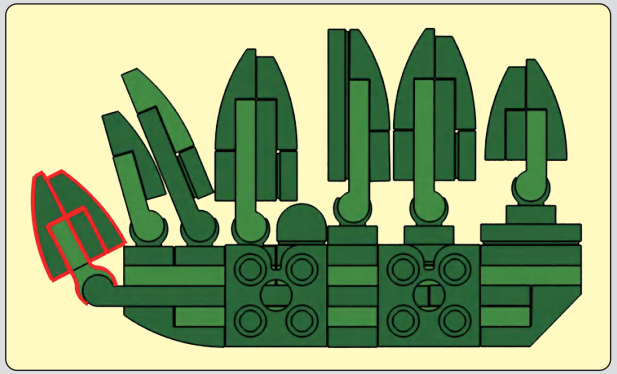

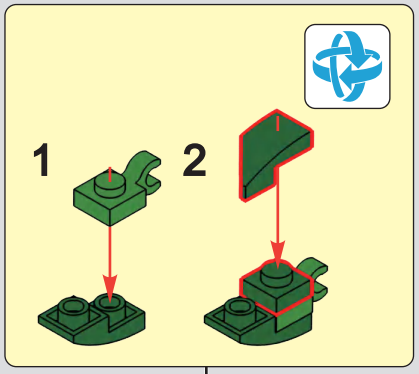

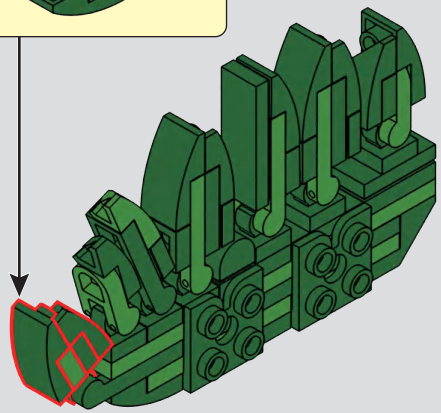

215

1

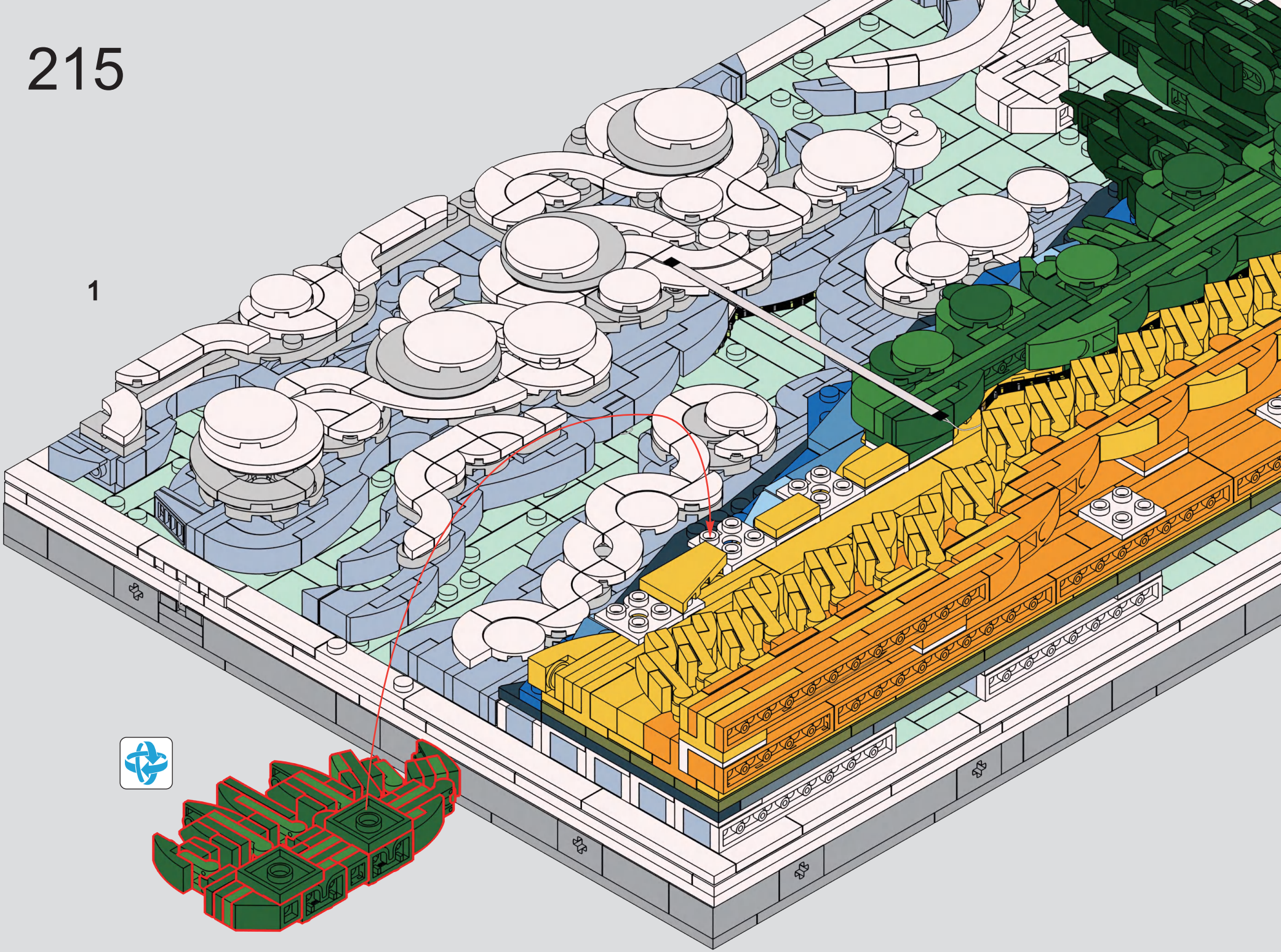

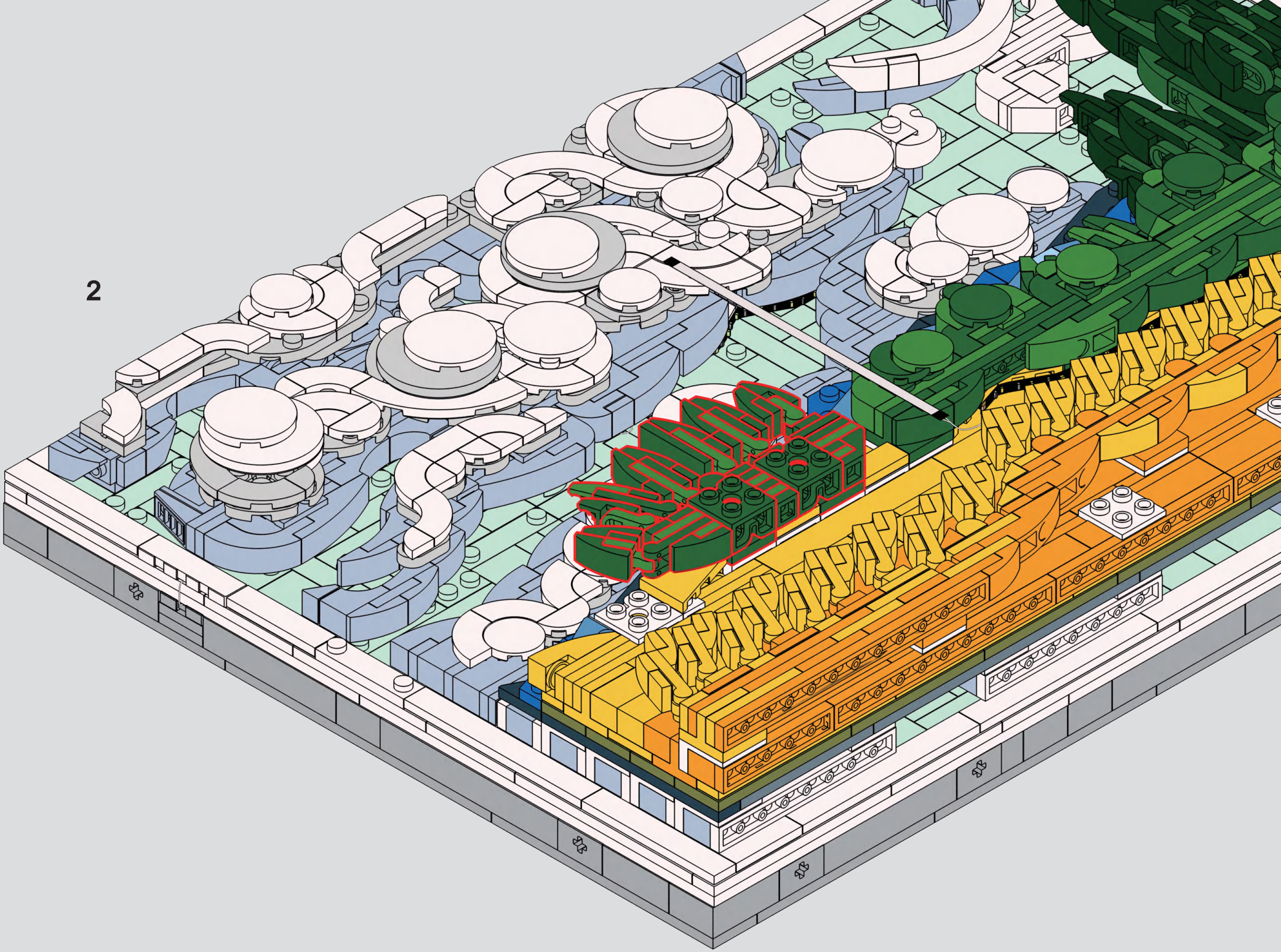
2

216

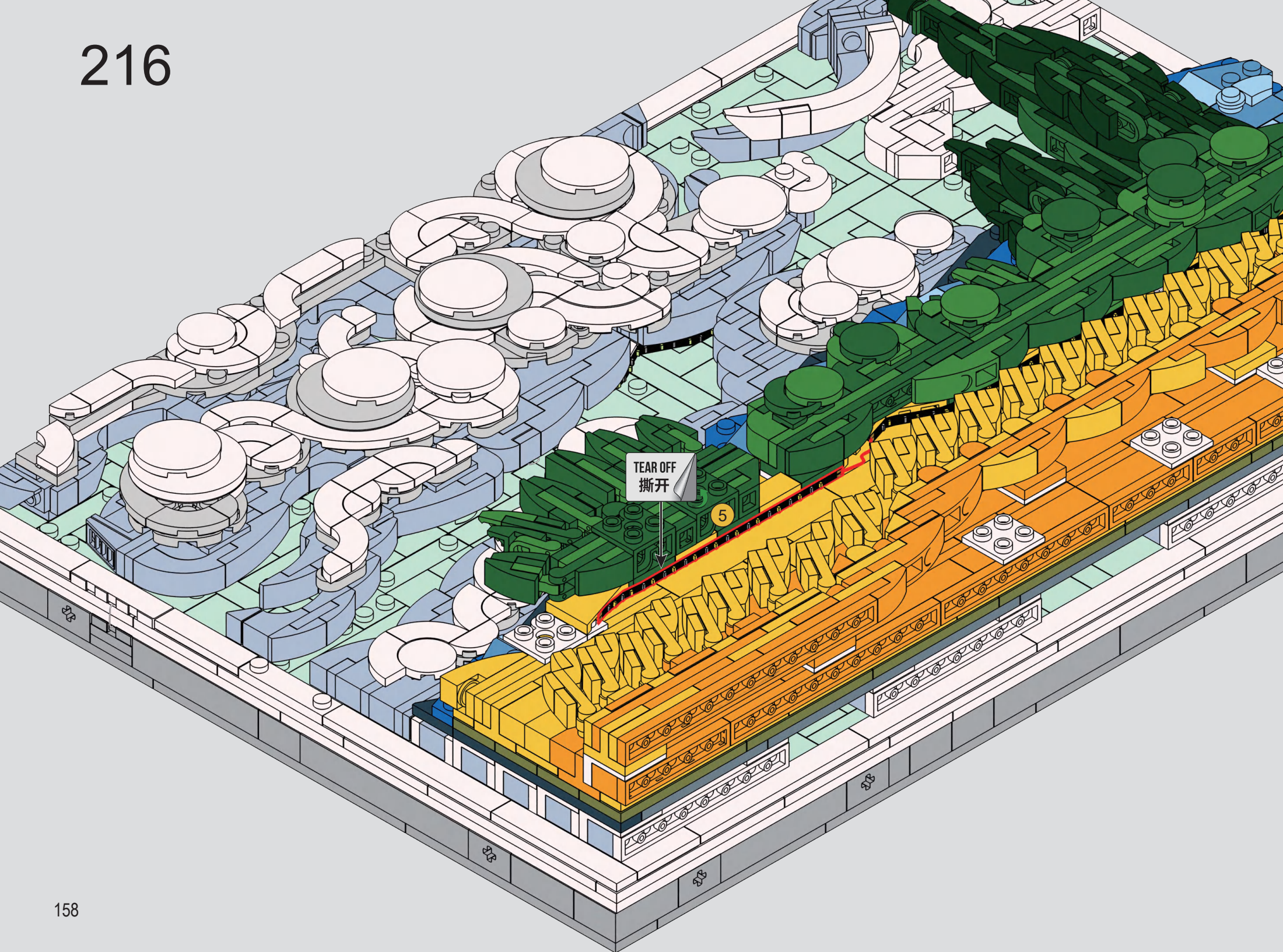

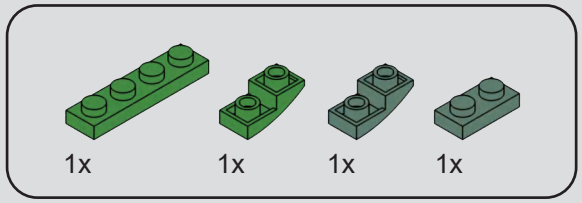

217

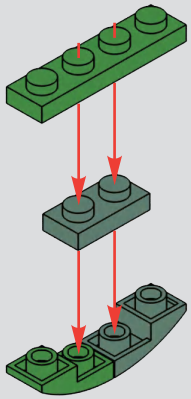

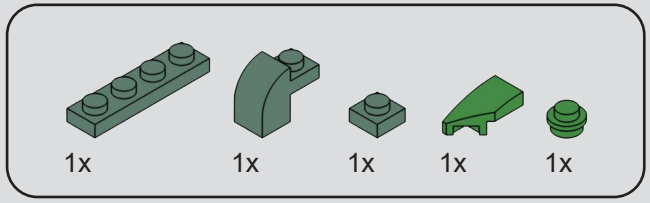

218

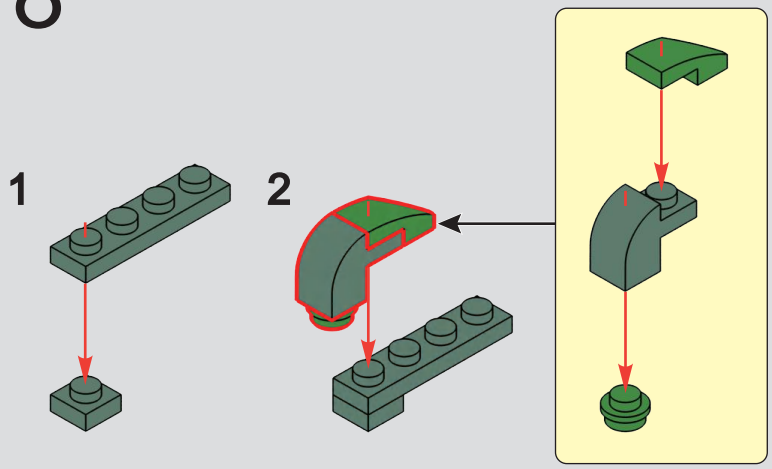

219

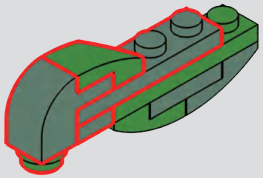

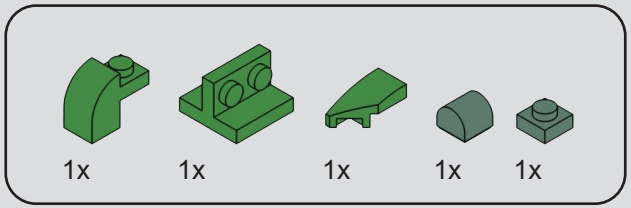

220

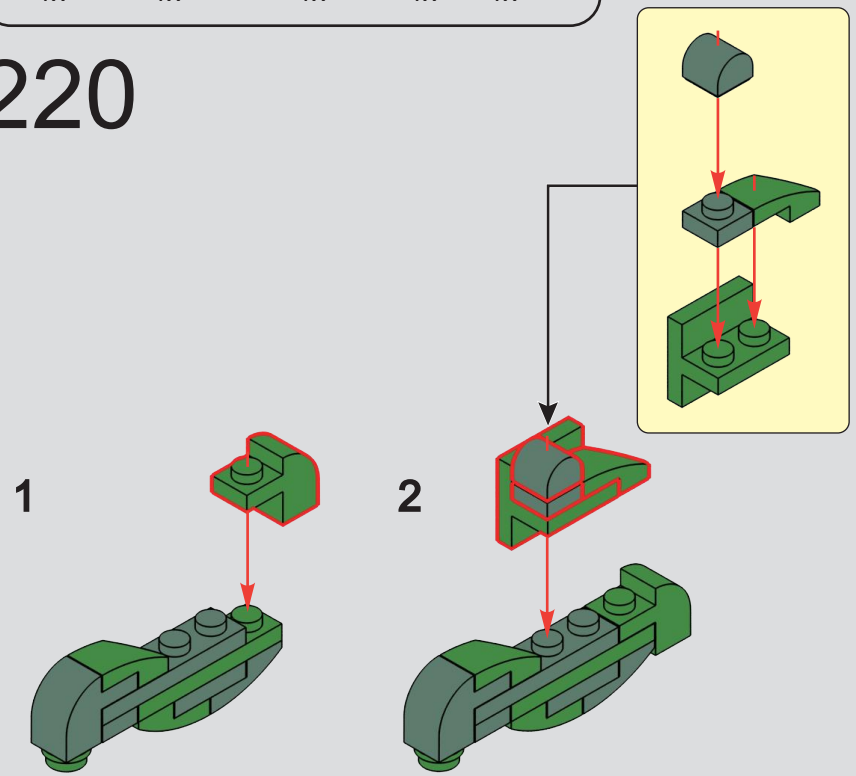

221

1

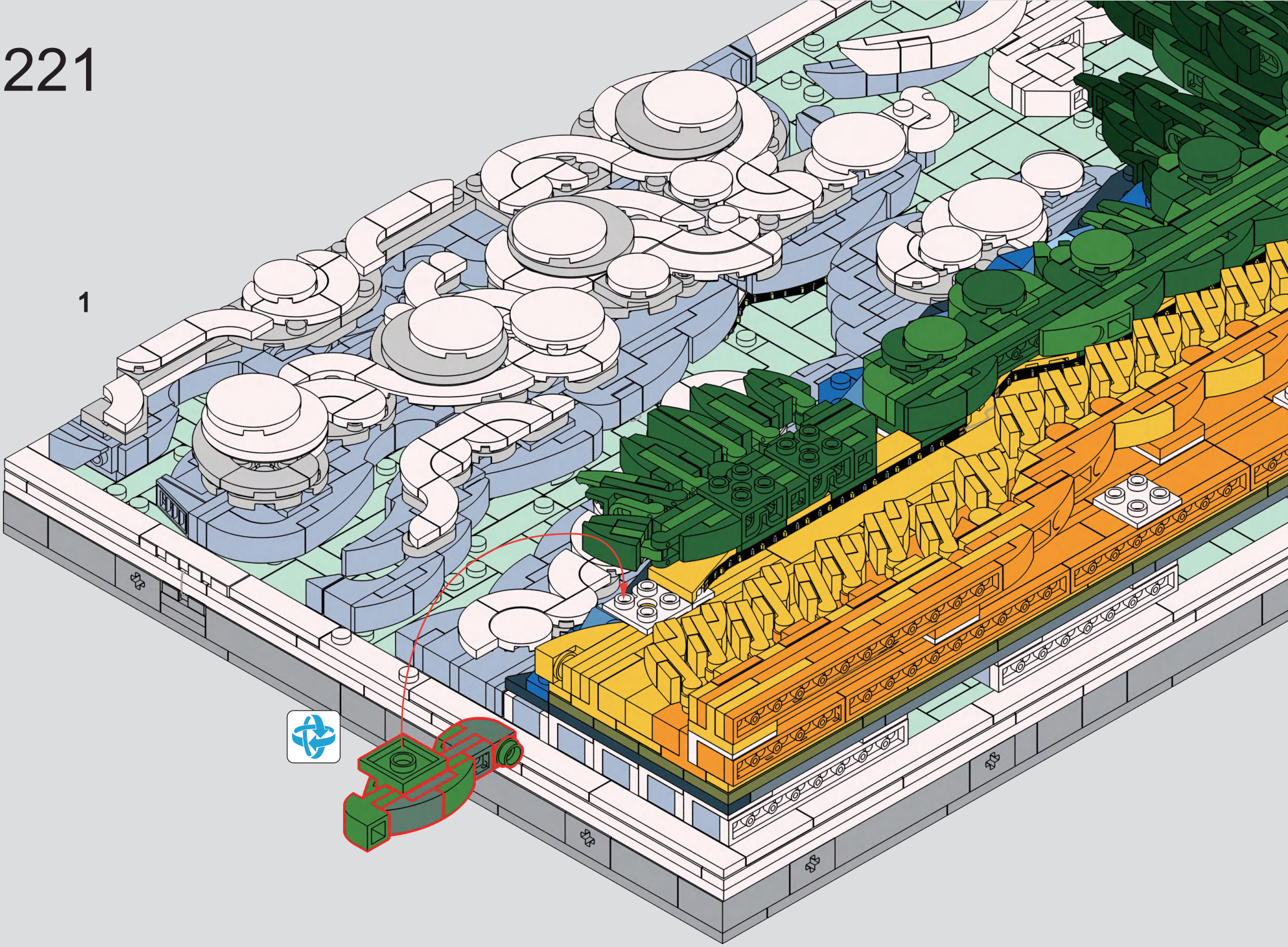

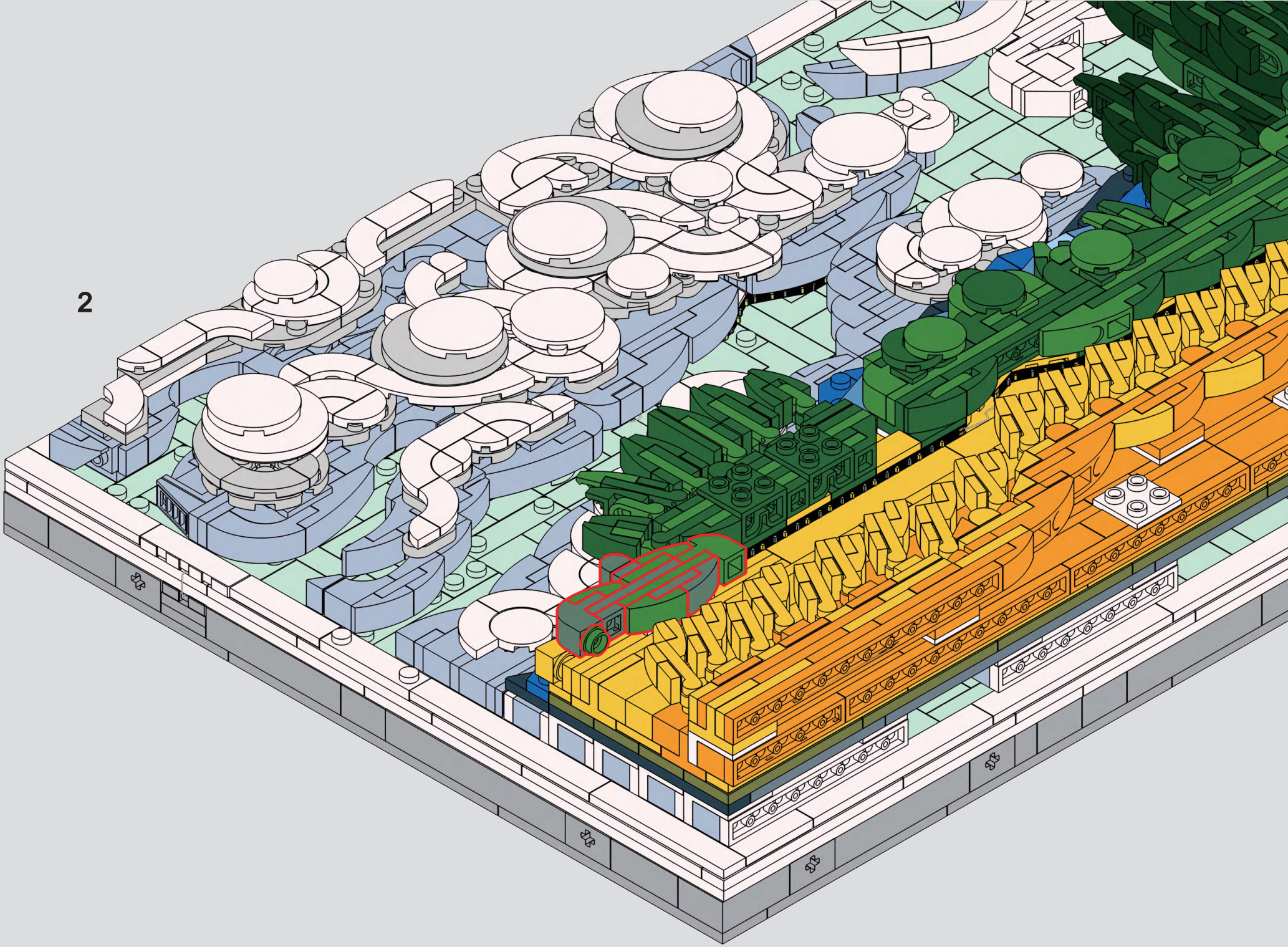
2

222

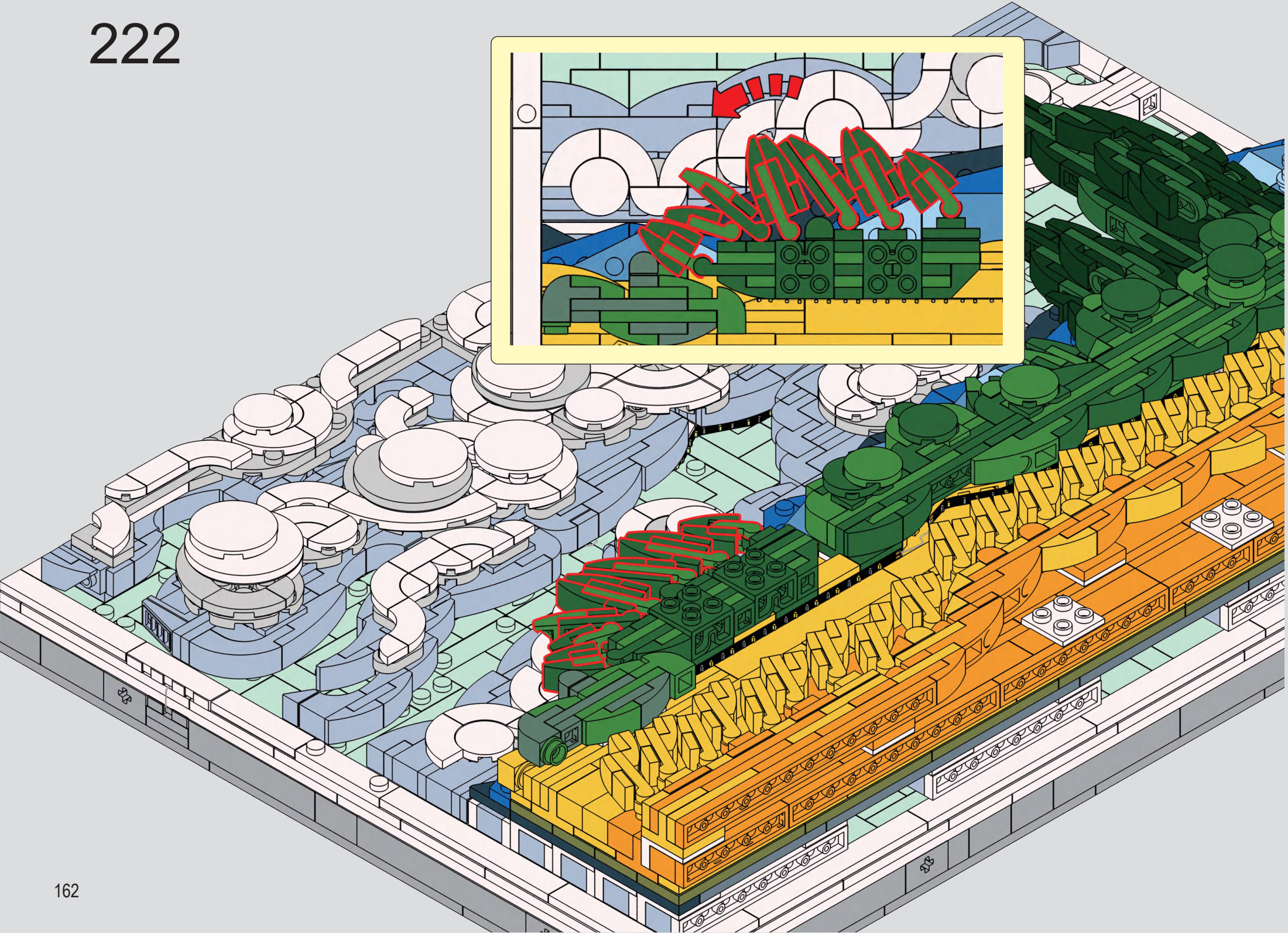

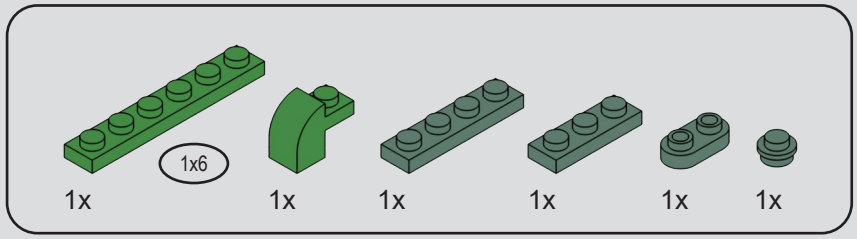

223

1

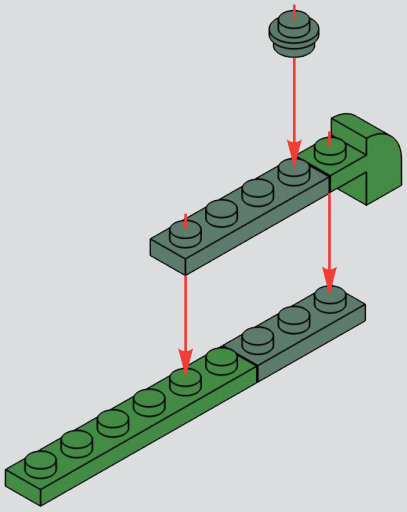

2

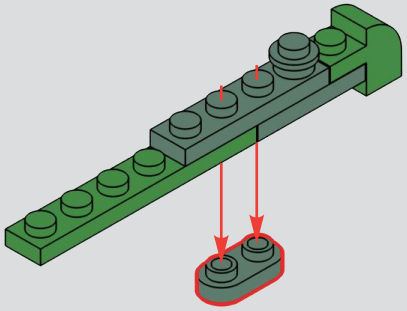

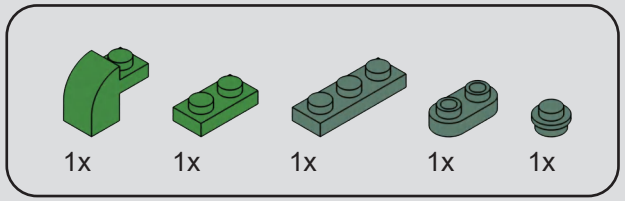

224

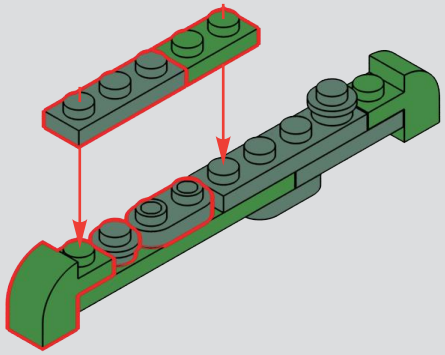

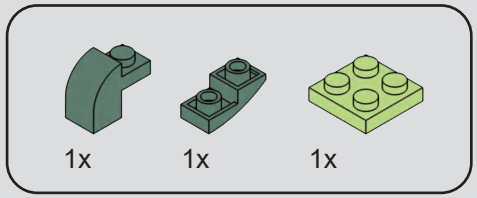

225

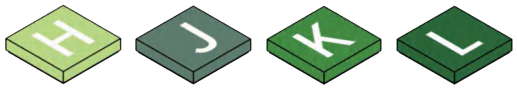

Check the color.
核对颜色。

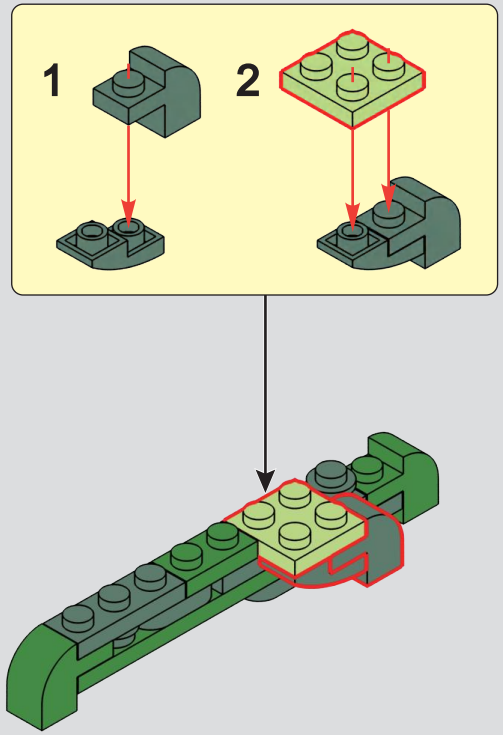

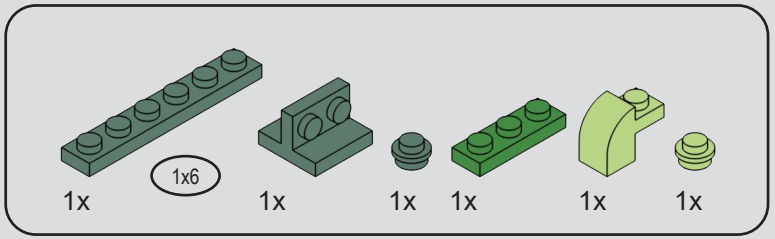

226

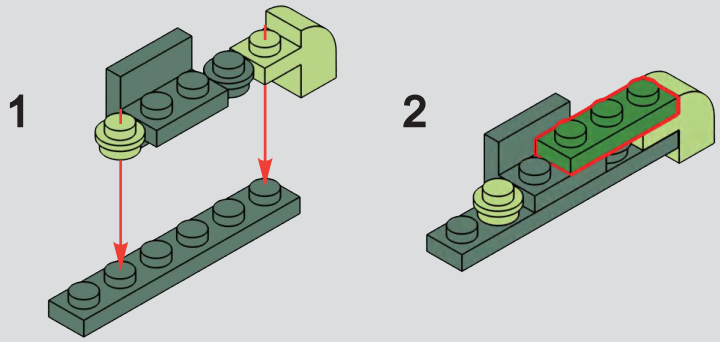

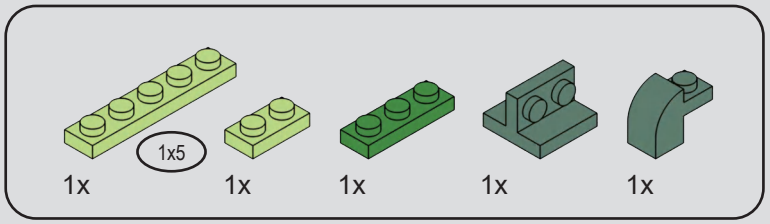

227

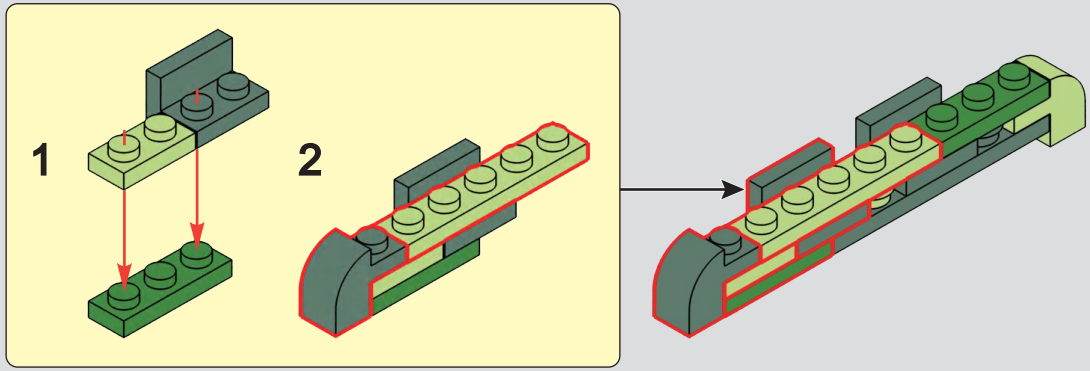

228

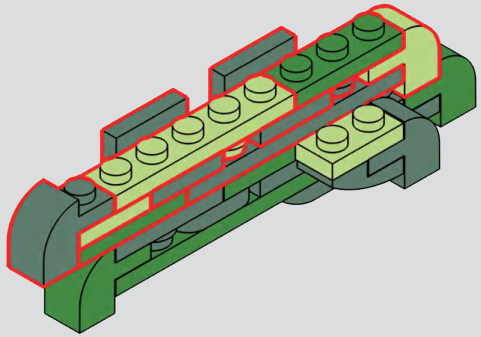

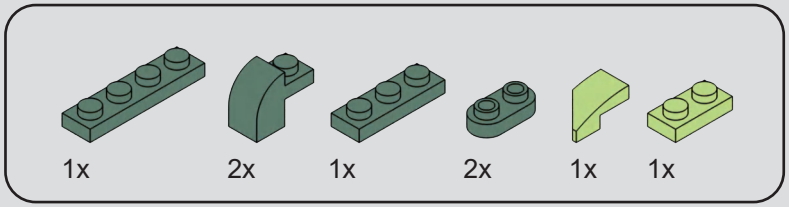

229

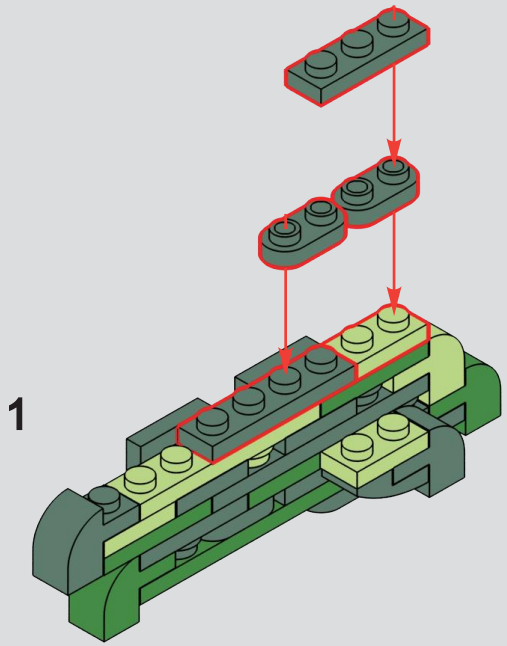

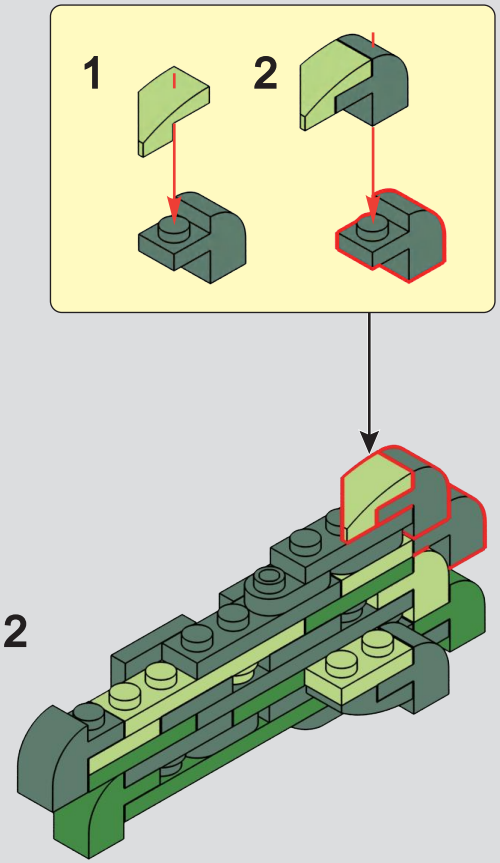

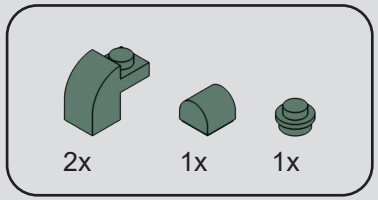

230

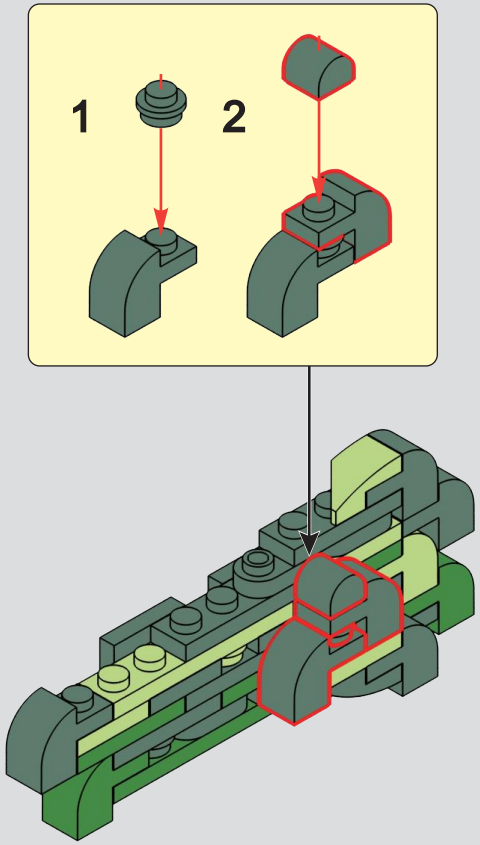

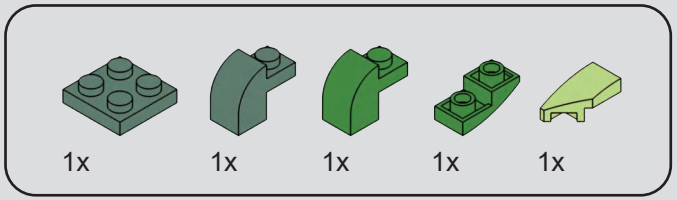

231

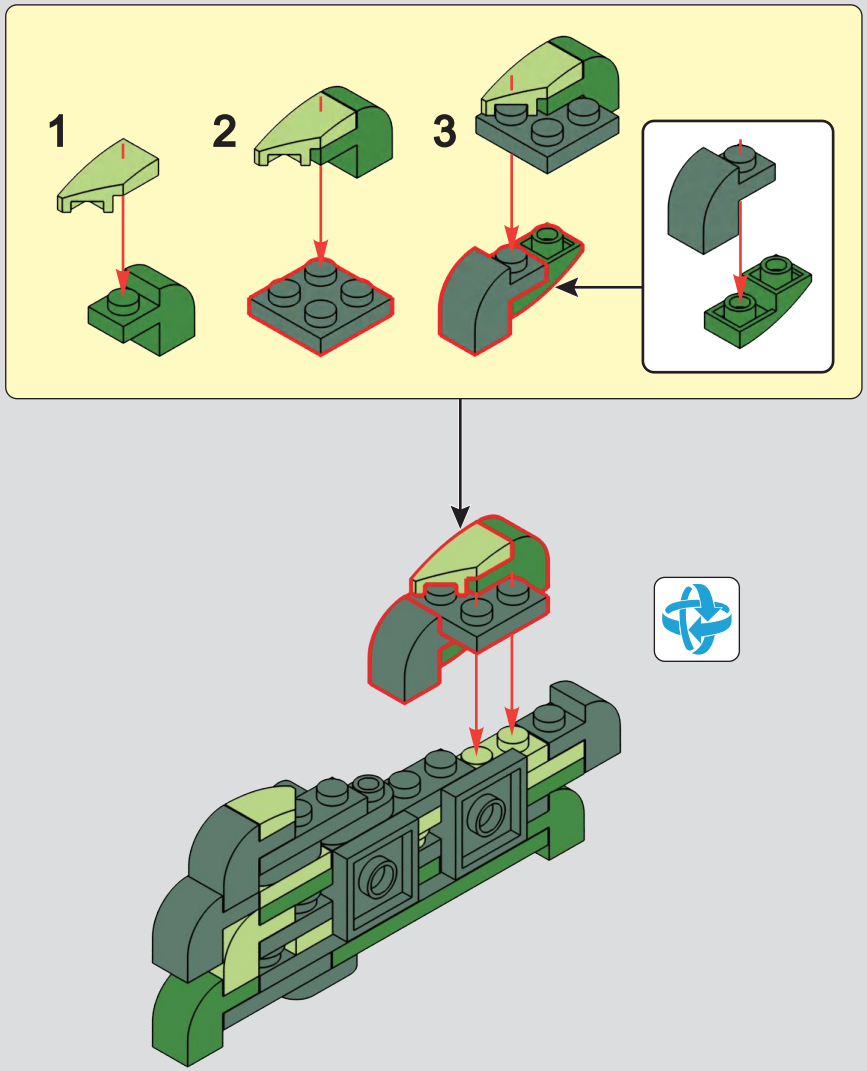

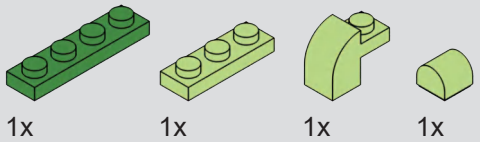

232

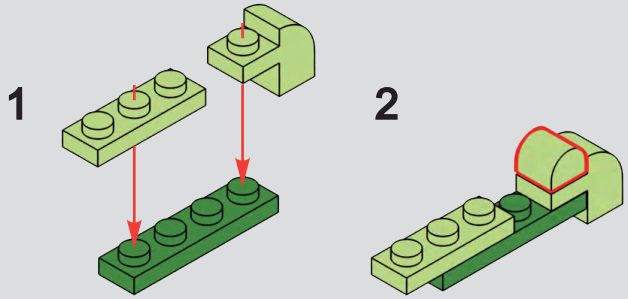

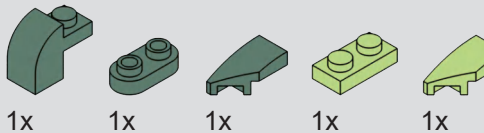

233

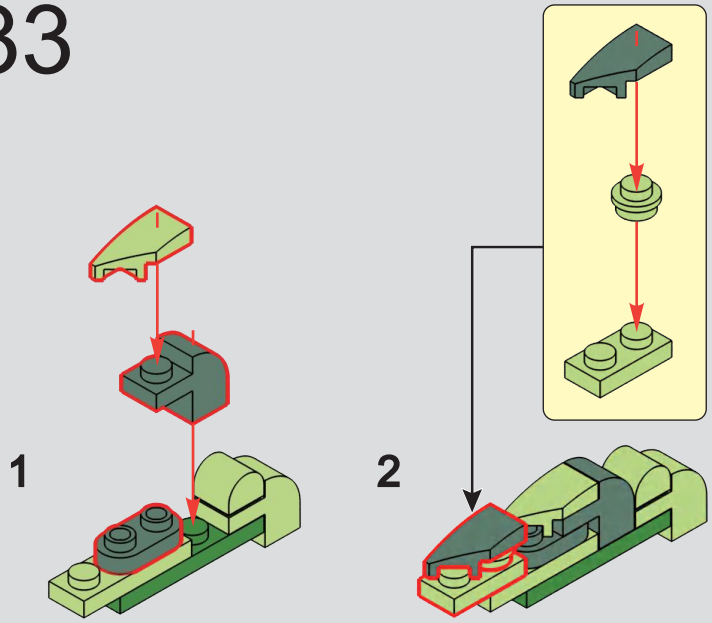

234

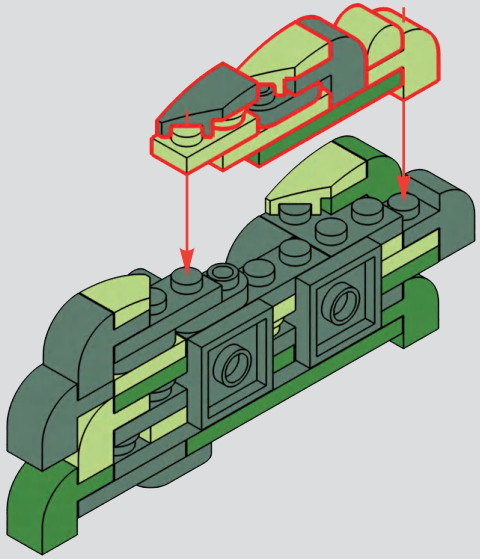

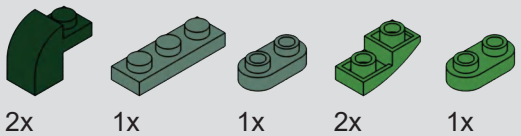

235

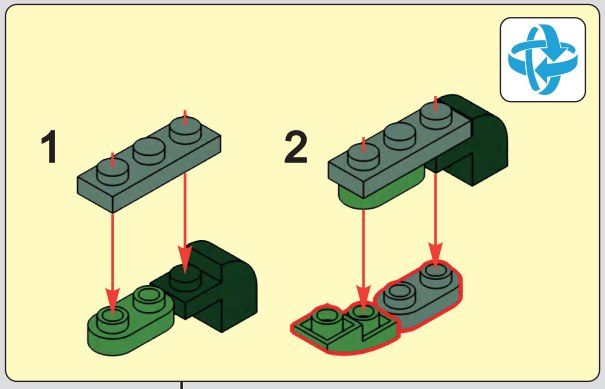

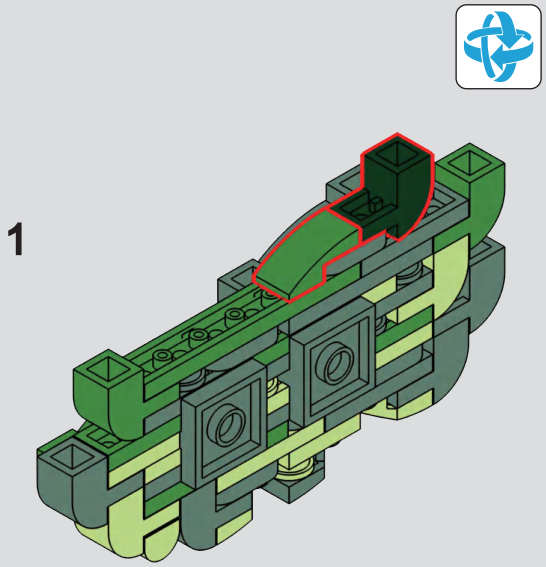

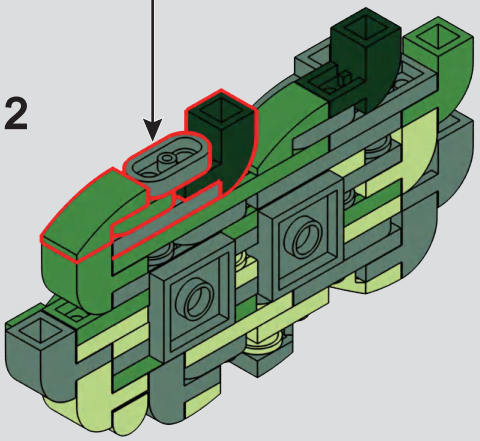

236

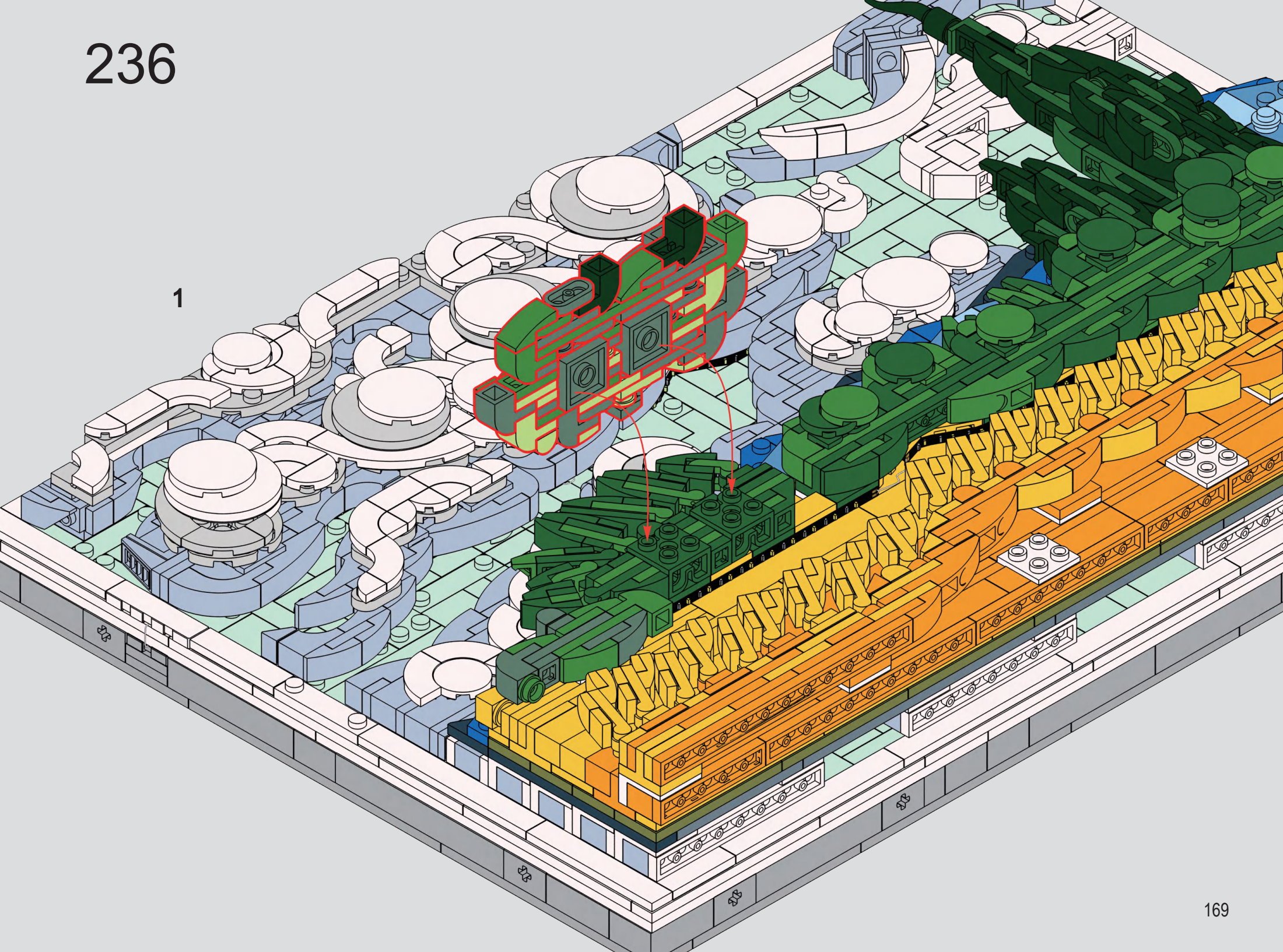

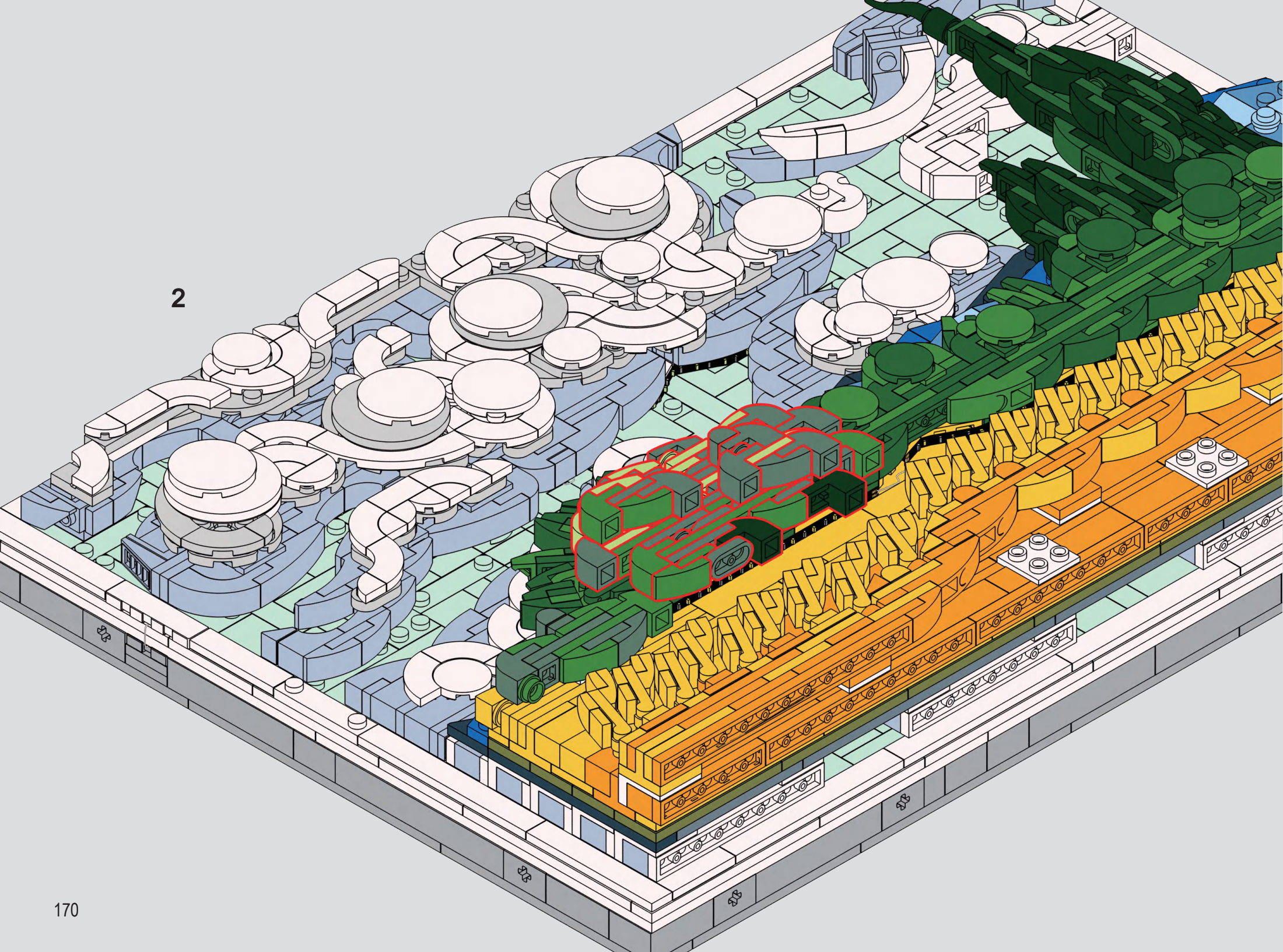
2

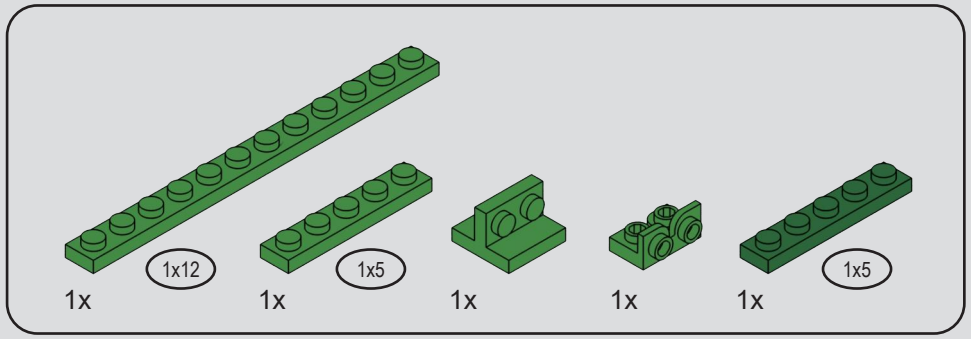

237

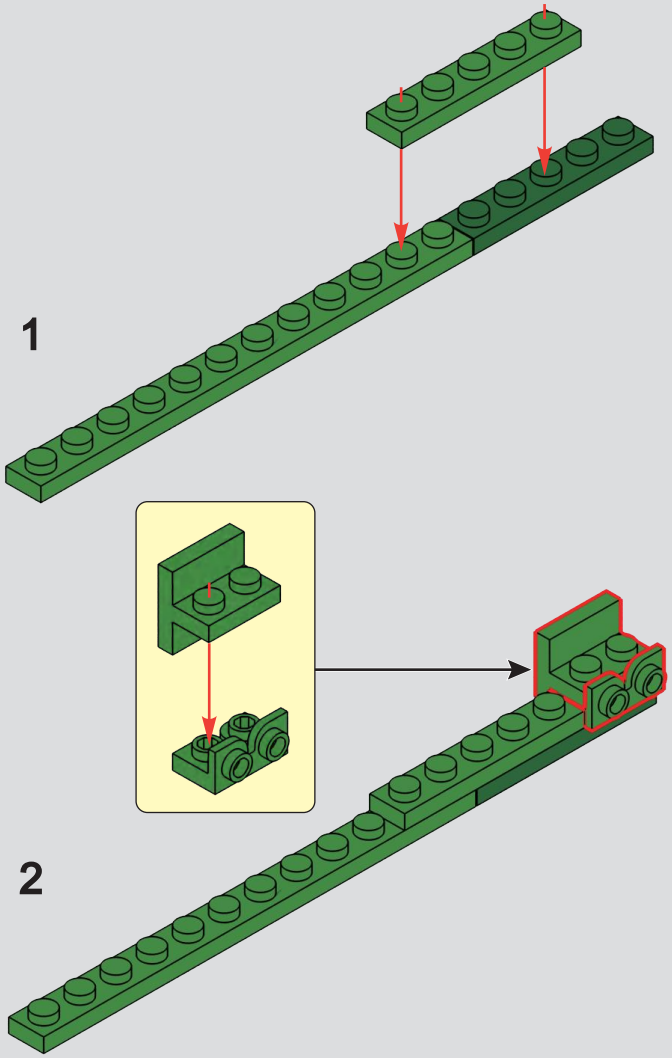

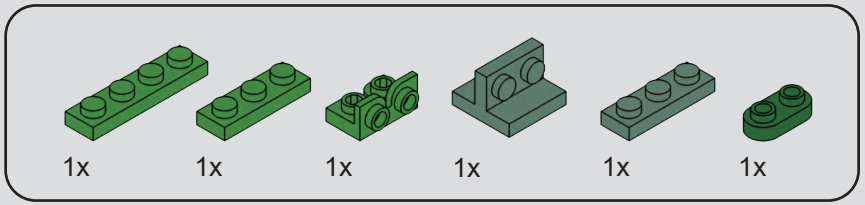

238

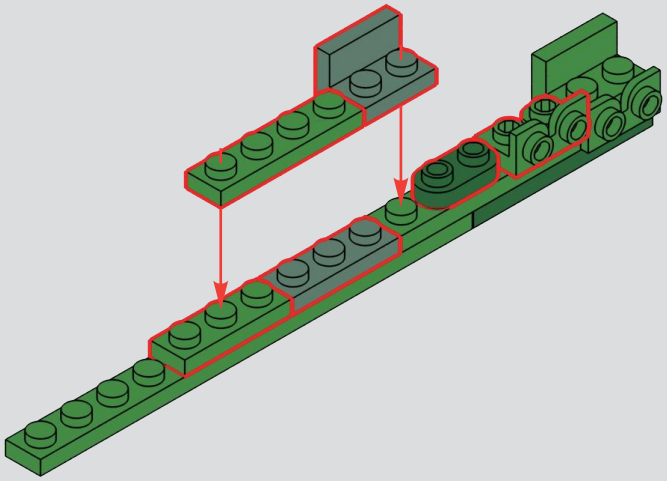

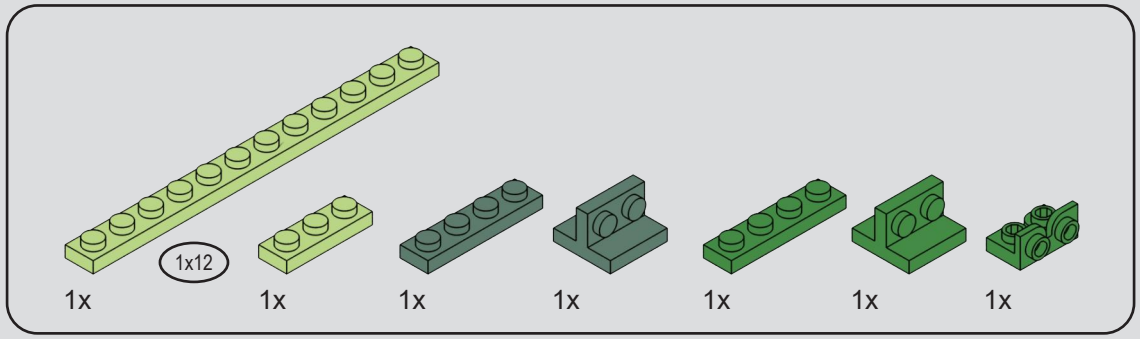

239

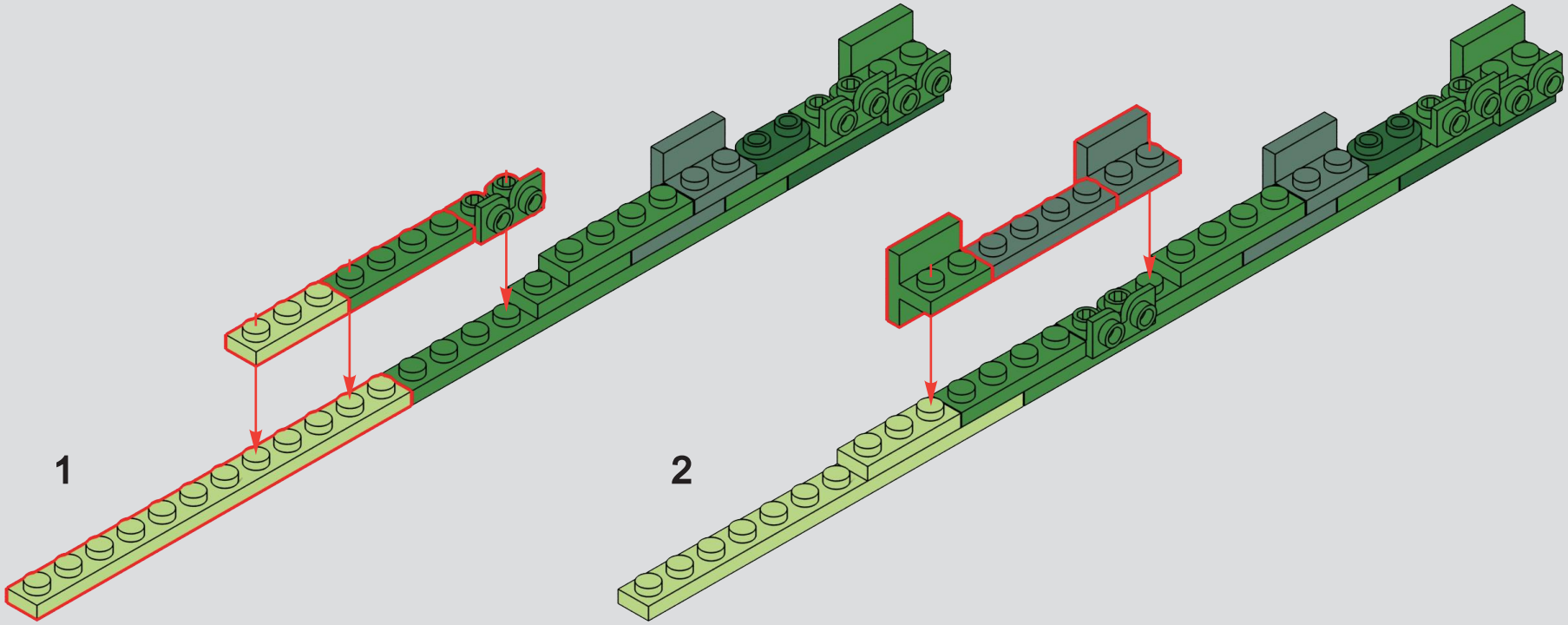

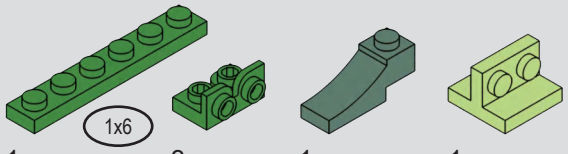

240

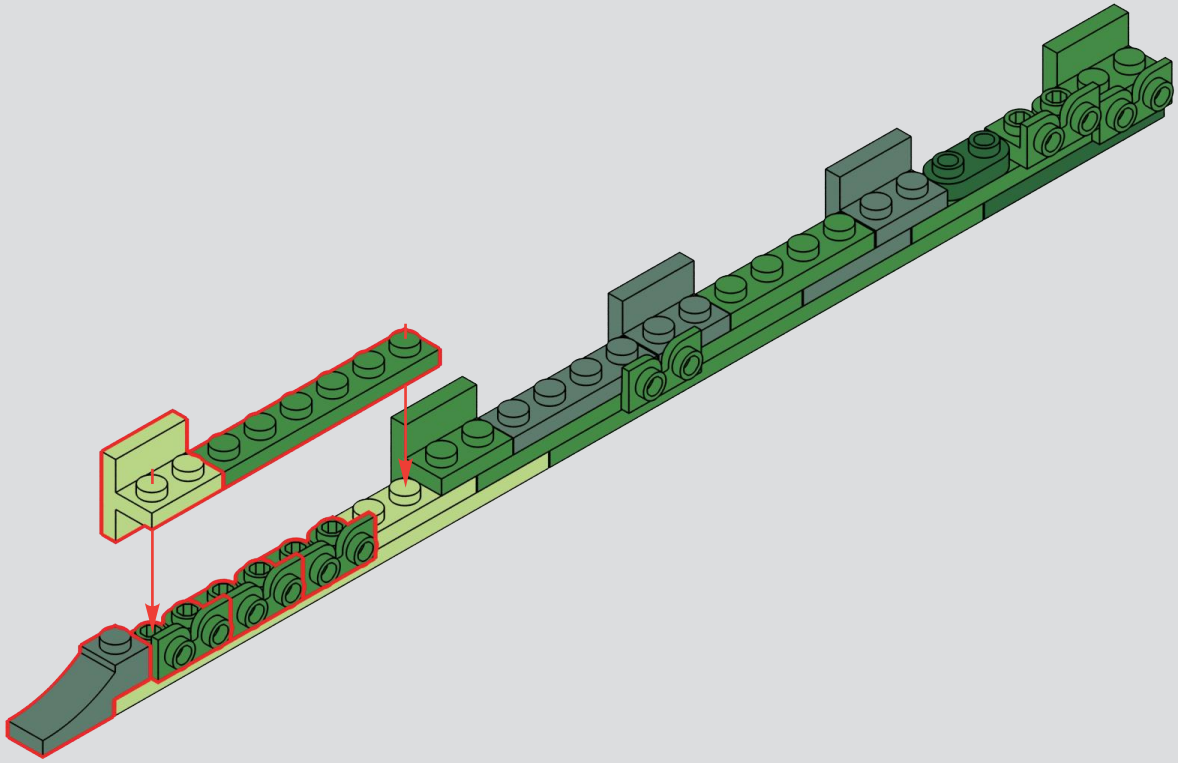

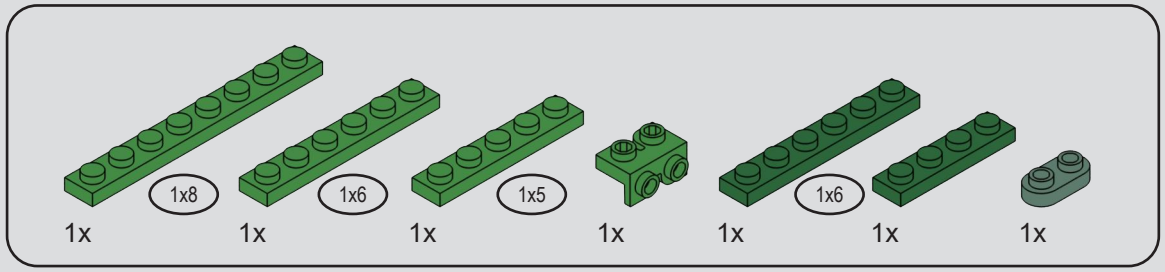

241

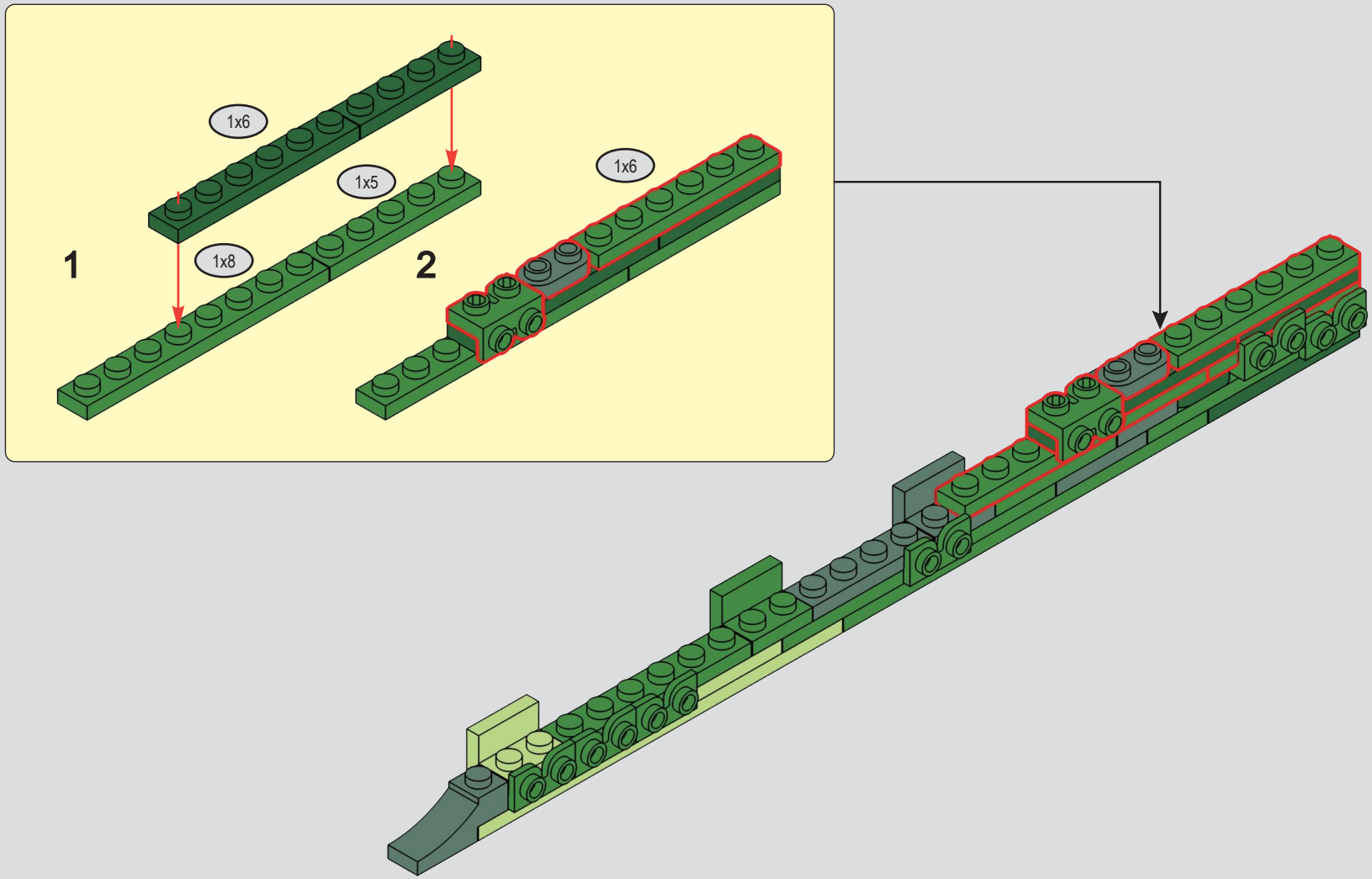

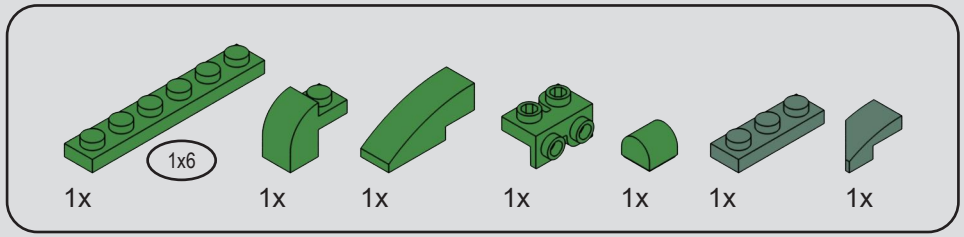

242

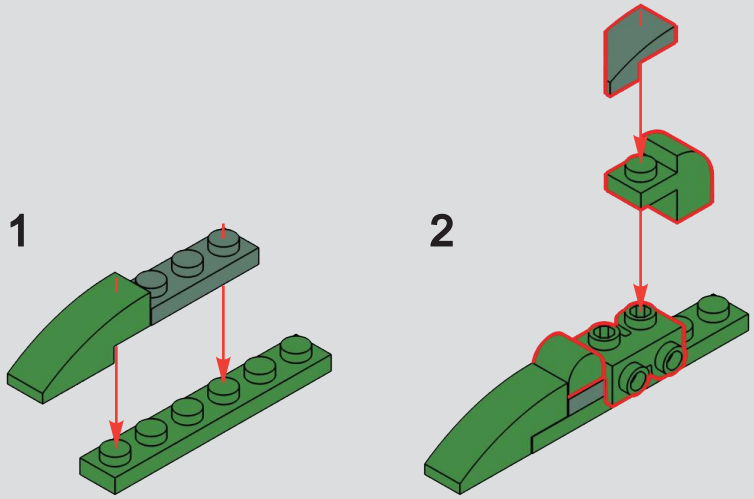

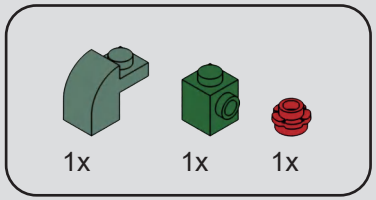

243

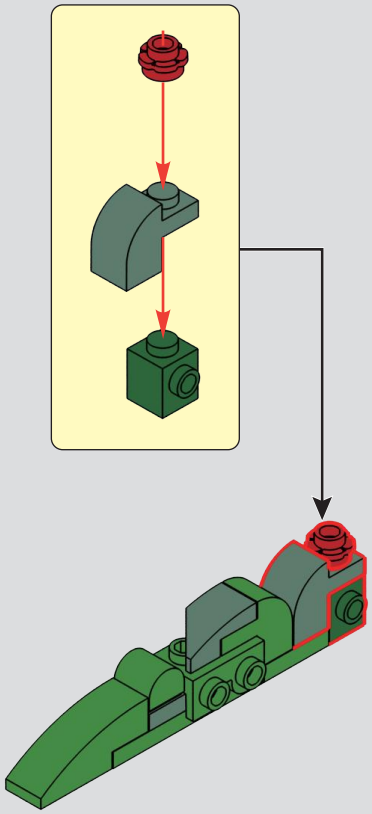

244

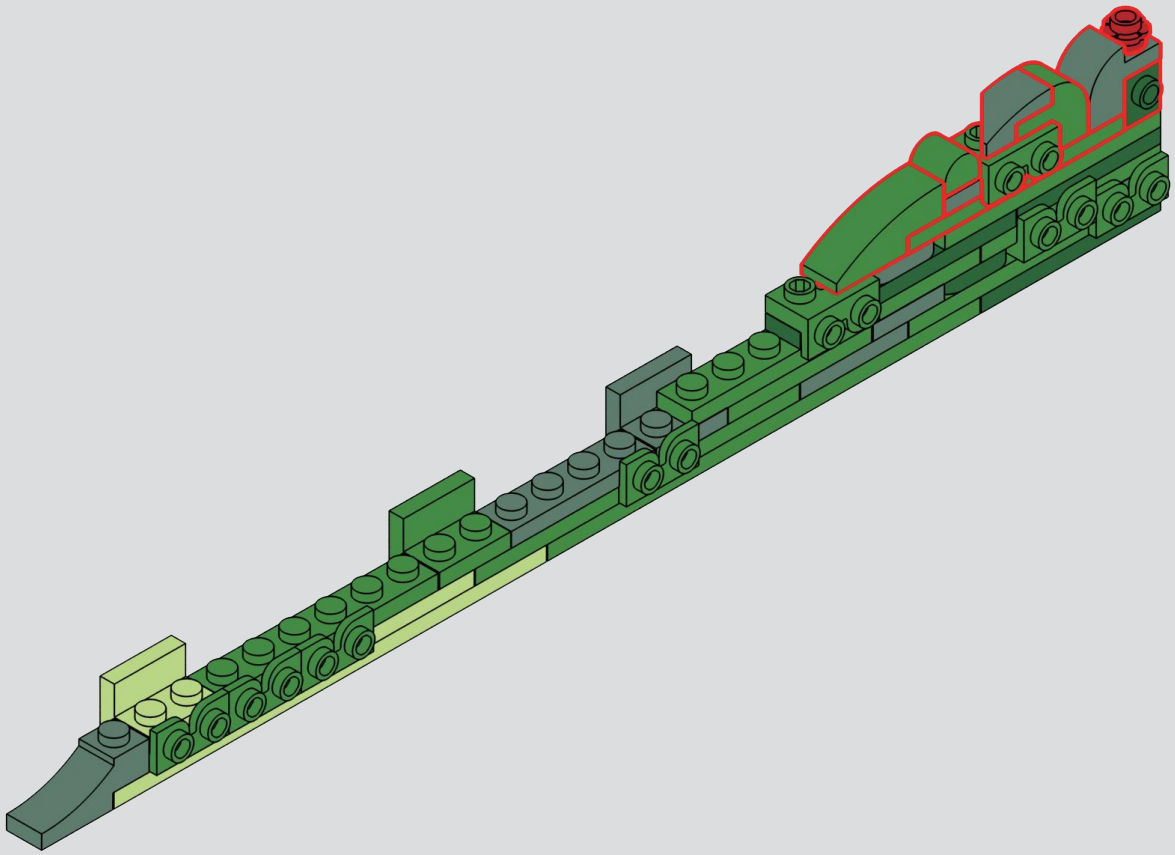

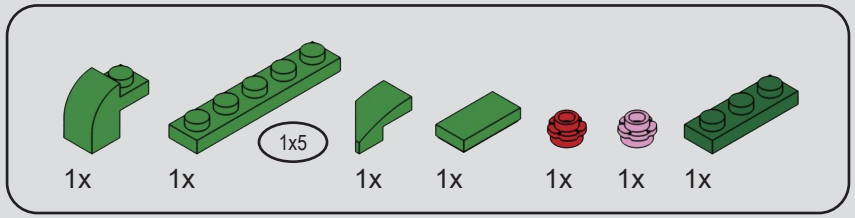

245

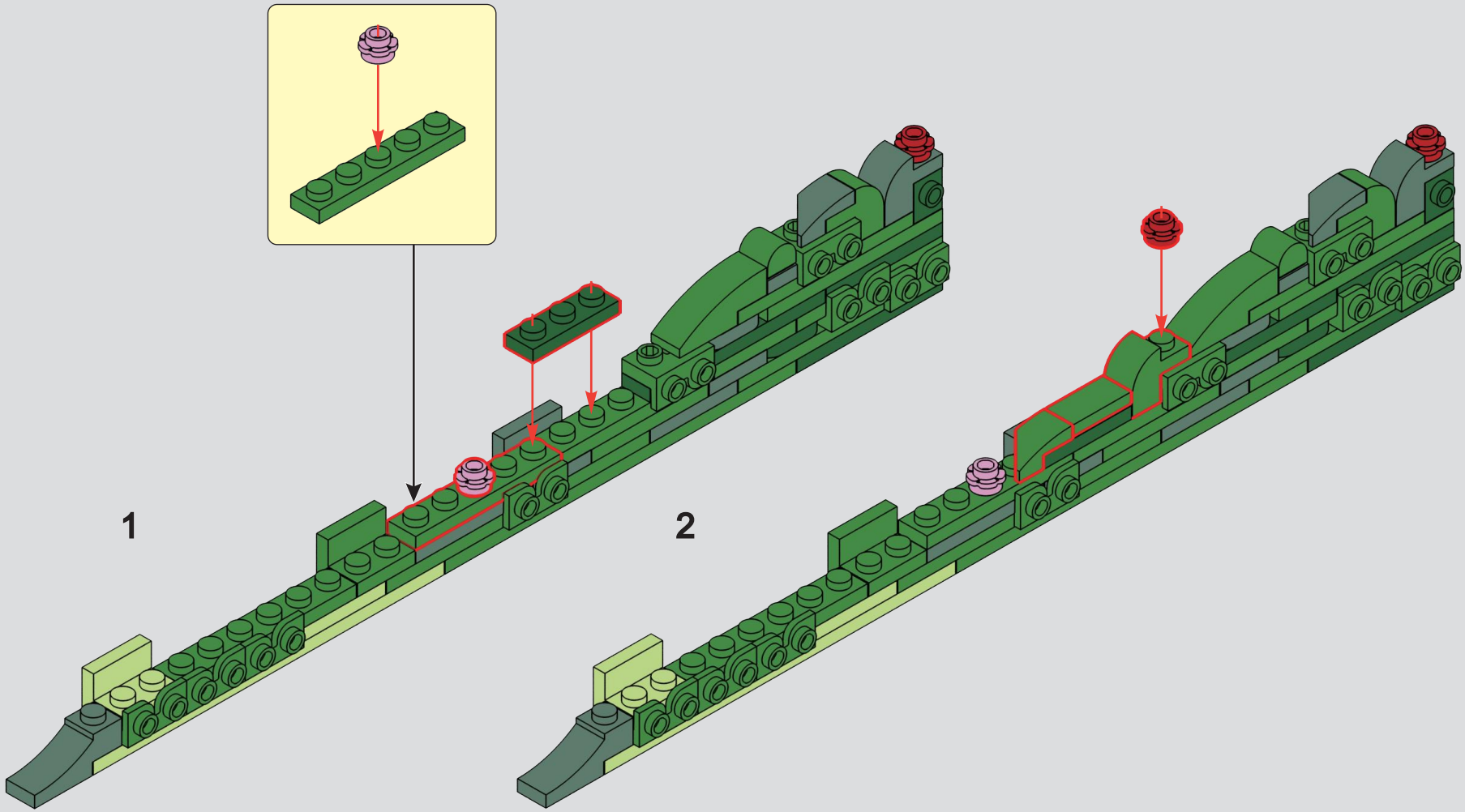

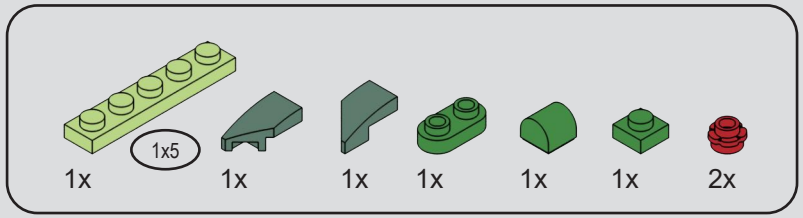

246

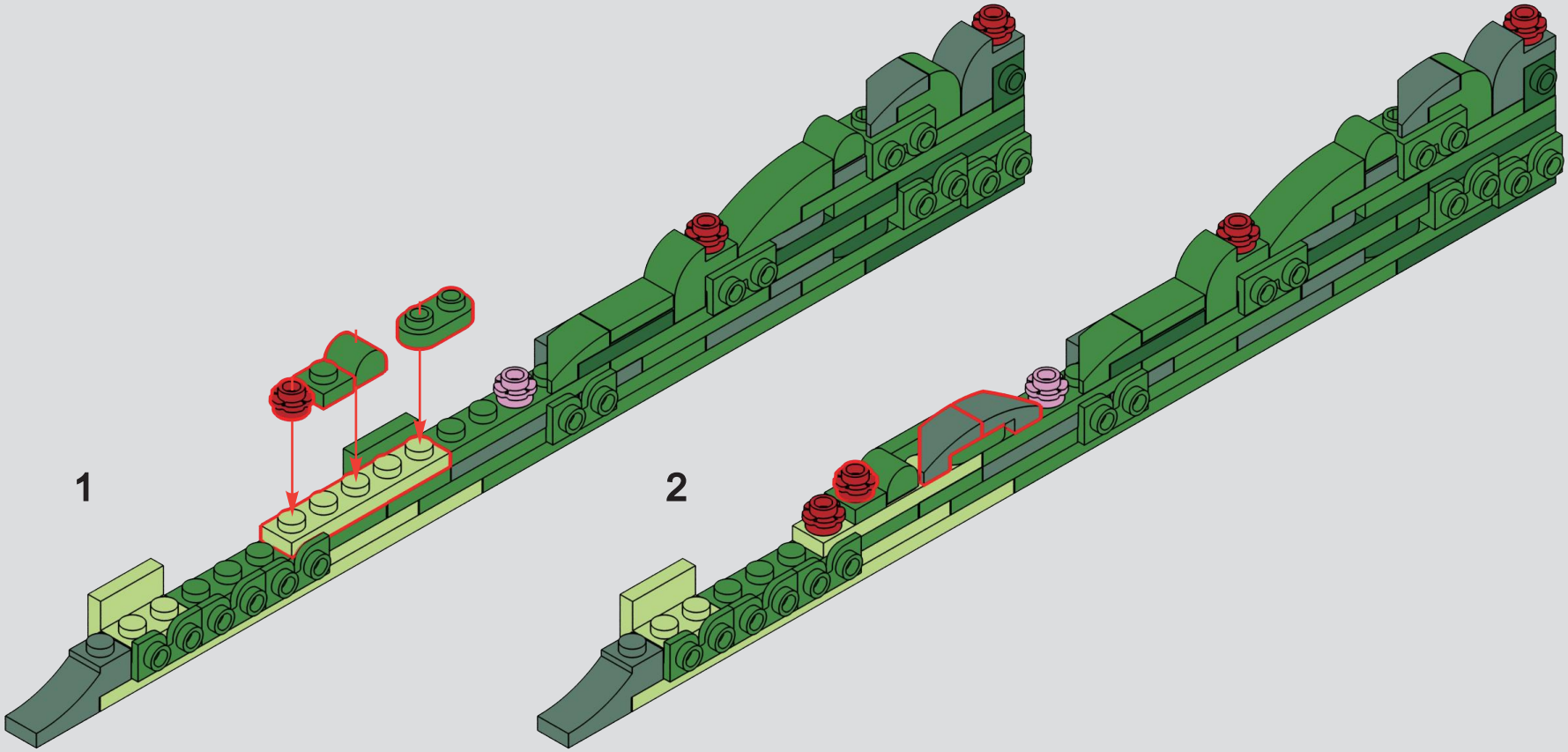

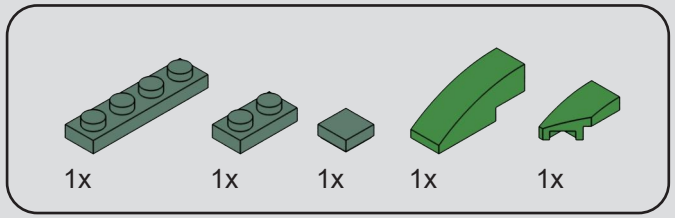

247

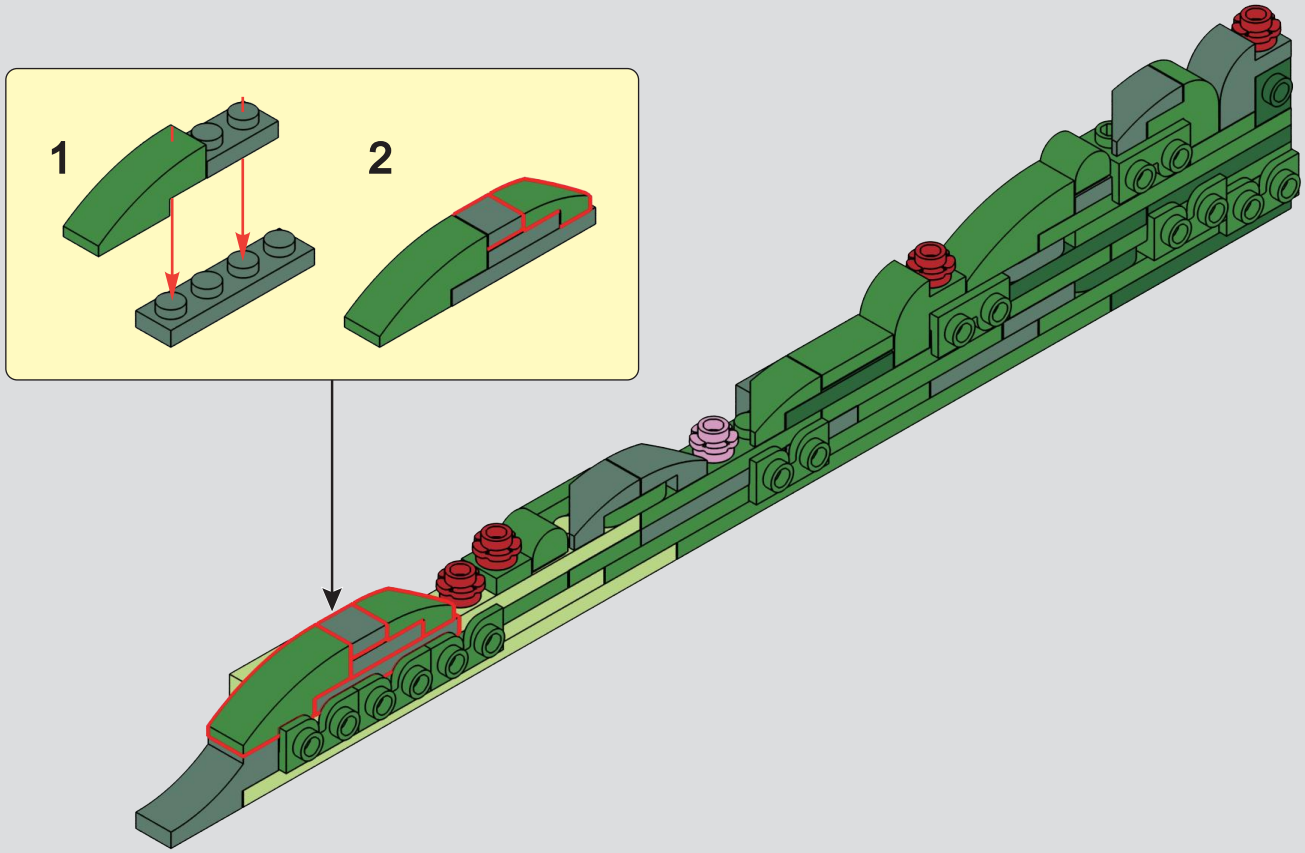

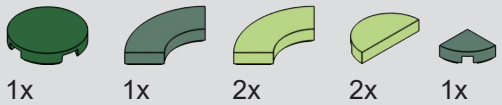

248

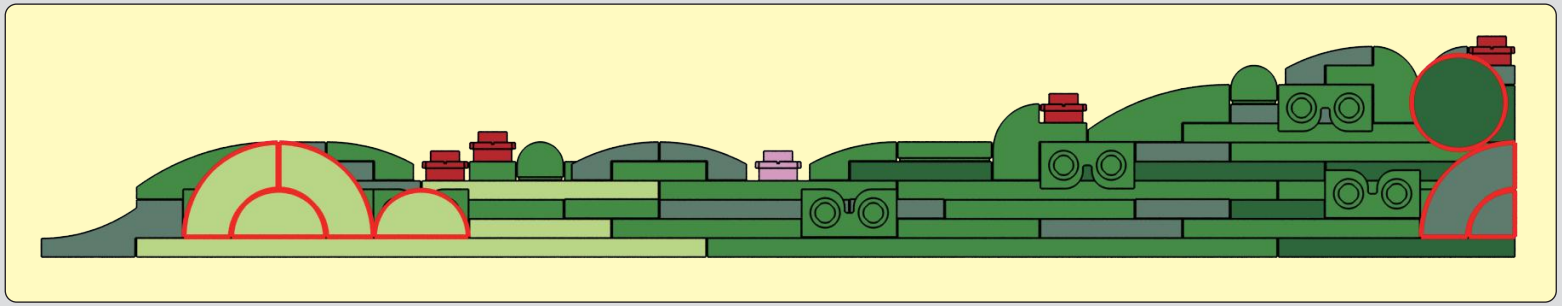

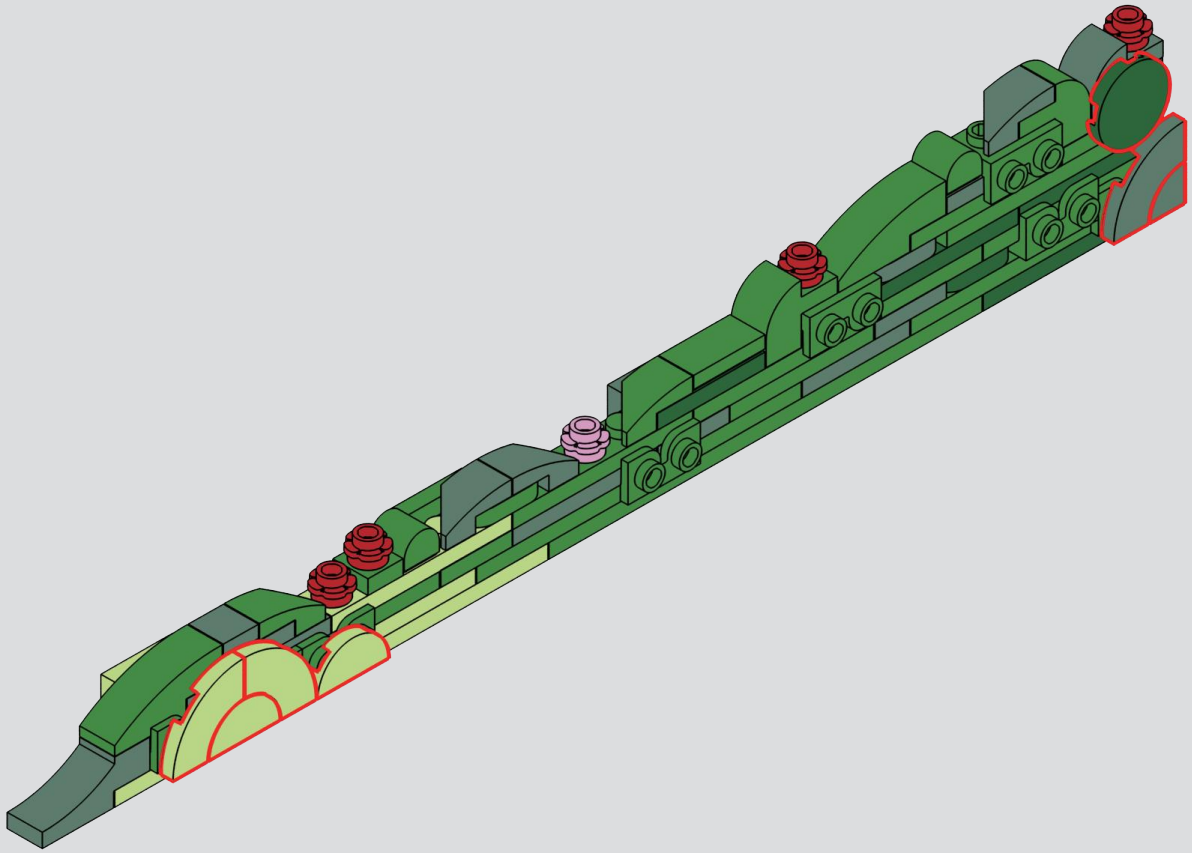

249

1

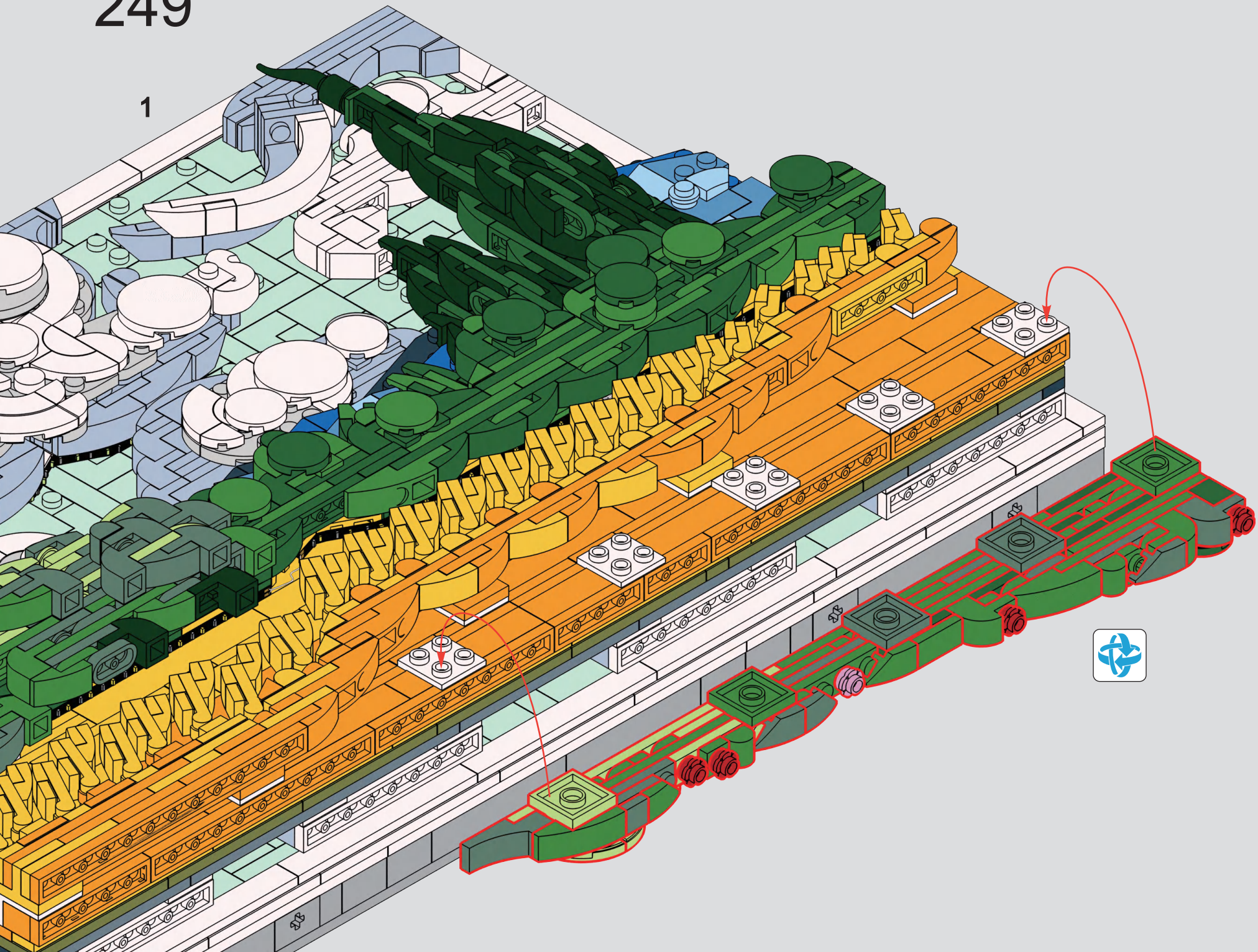

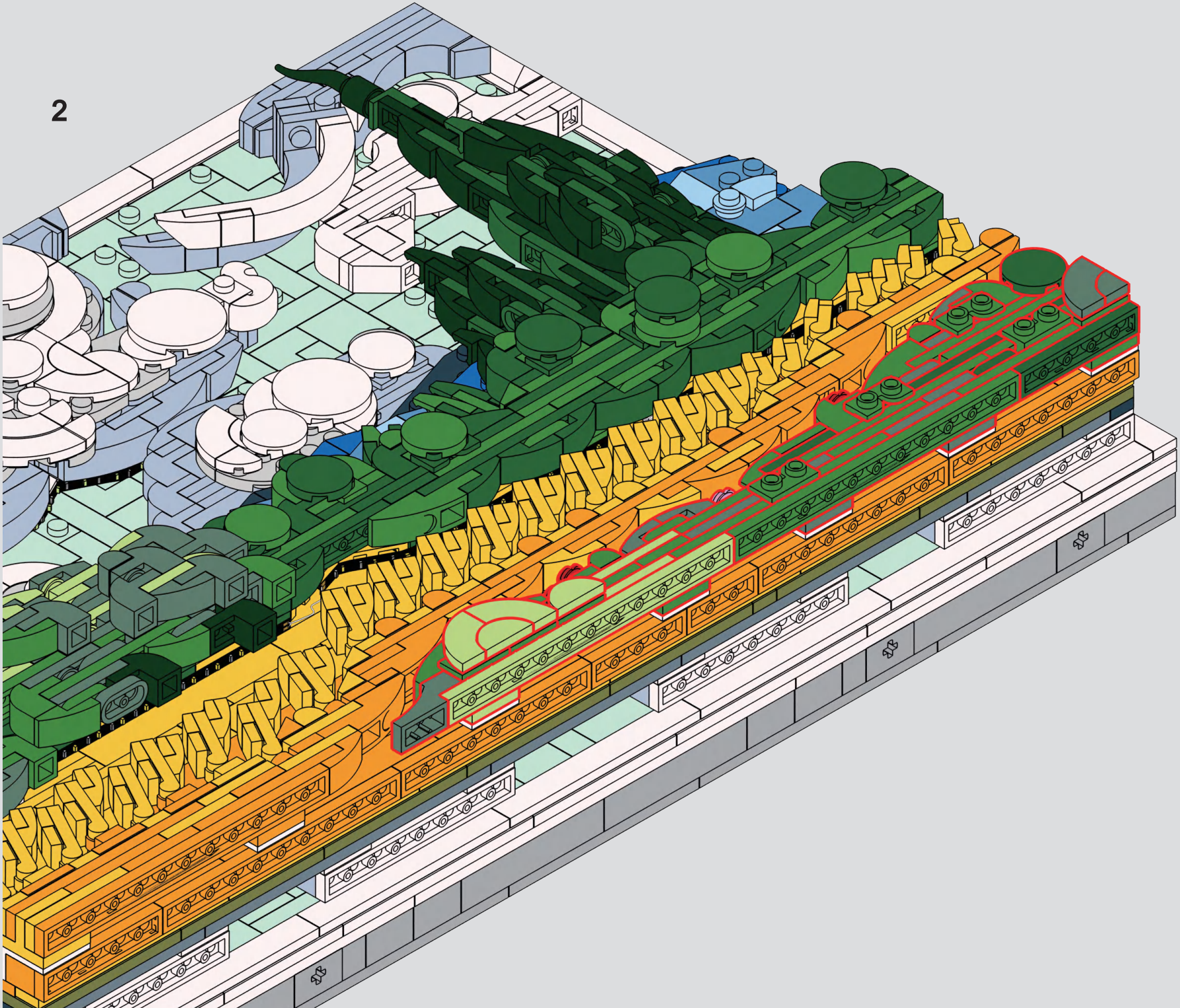
2

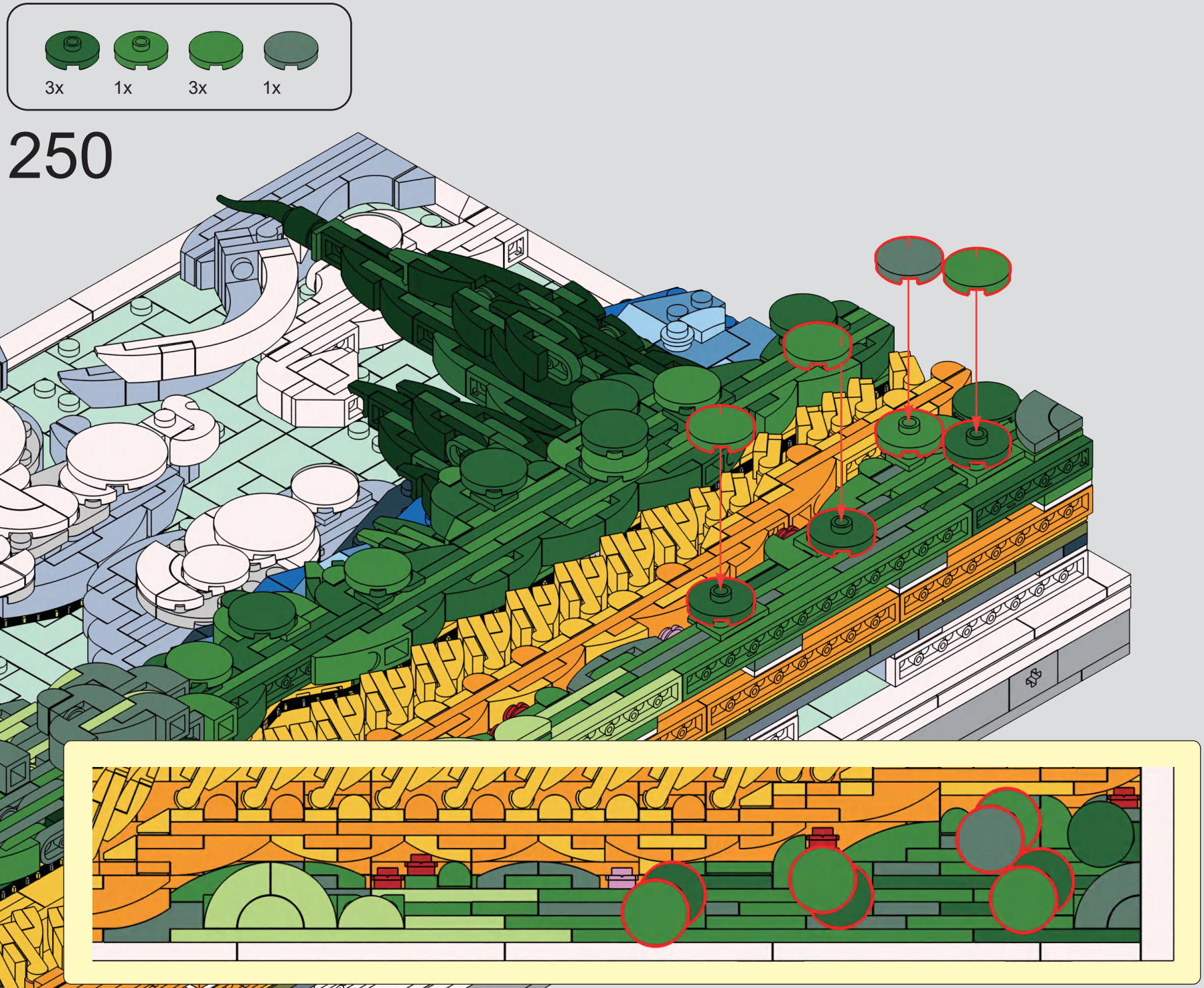

250

15
F
LUMIBRICKS
01
Delight
Day And Night
LUMIBRICKS
02
Delight
Day And Night

251

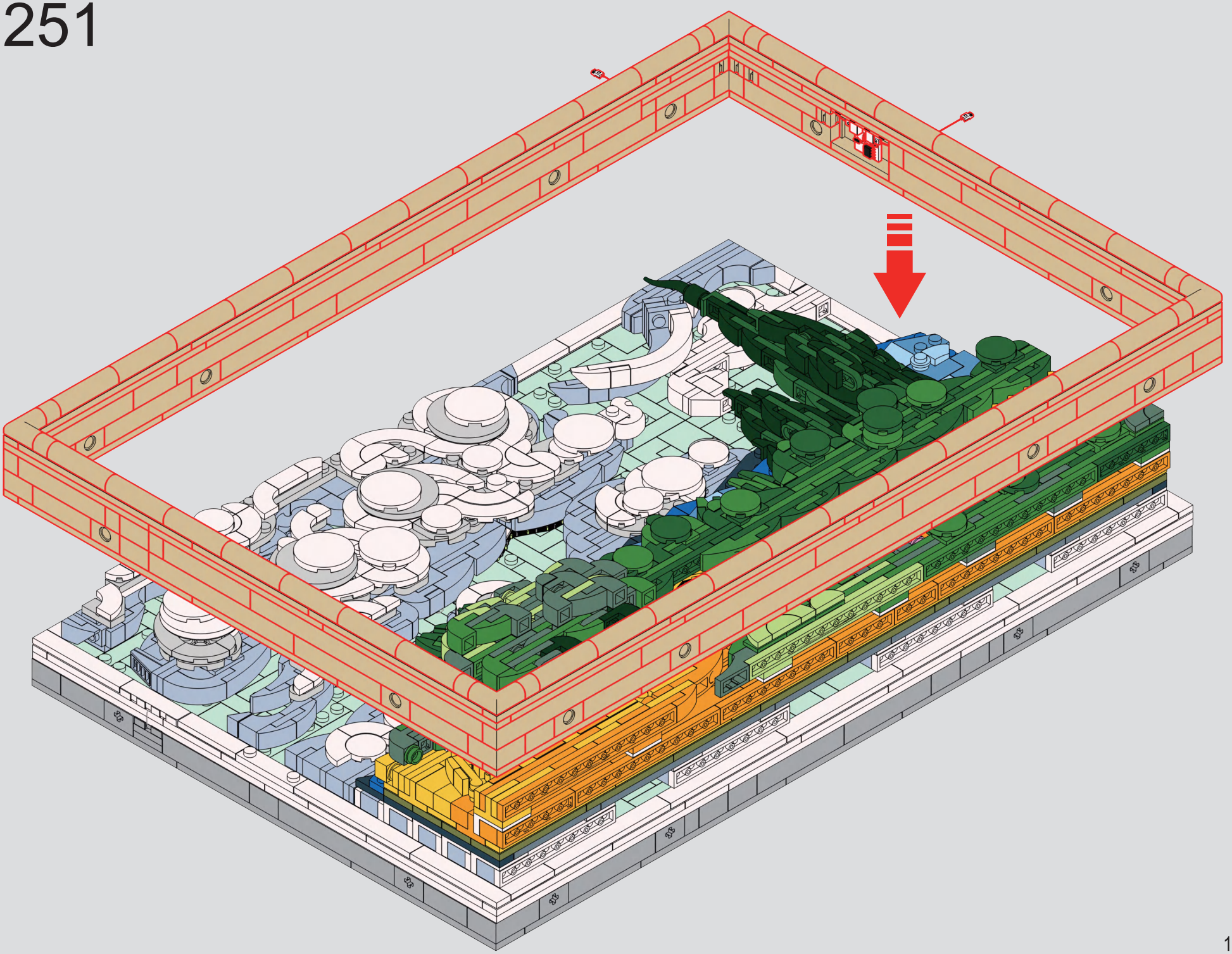

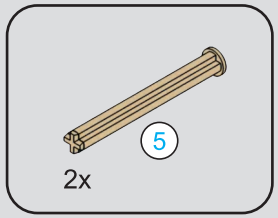

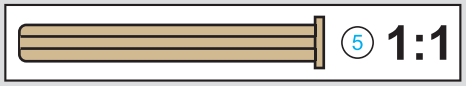

252

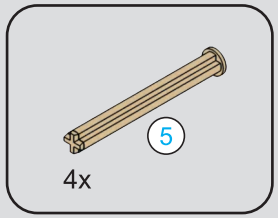

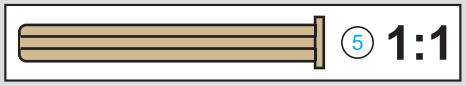

253

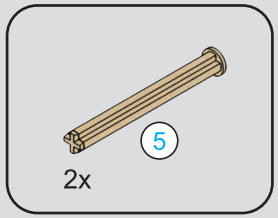

254

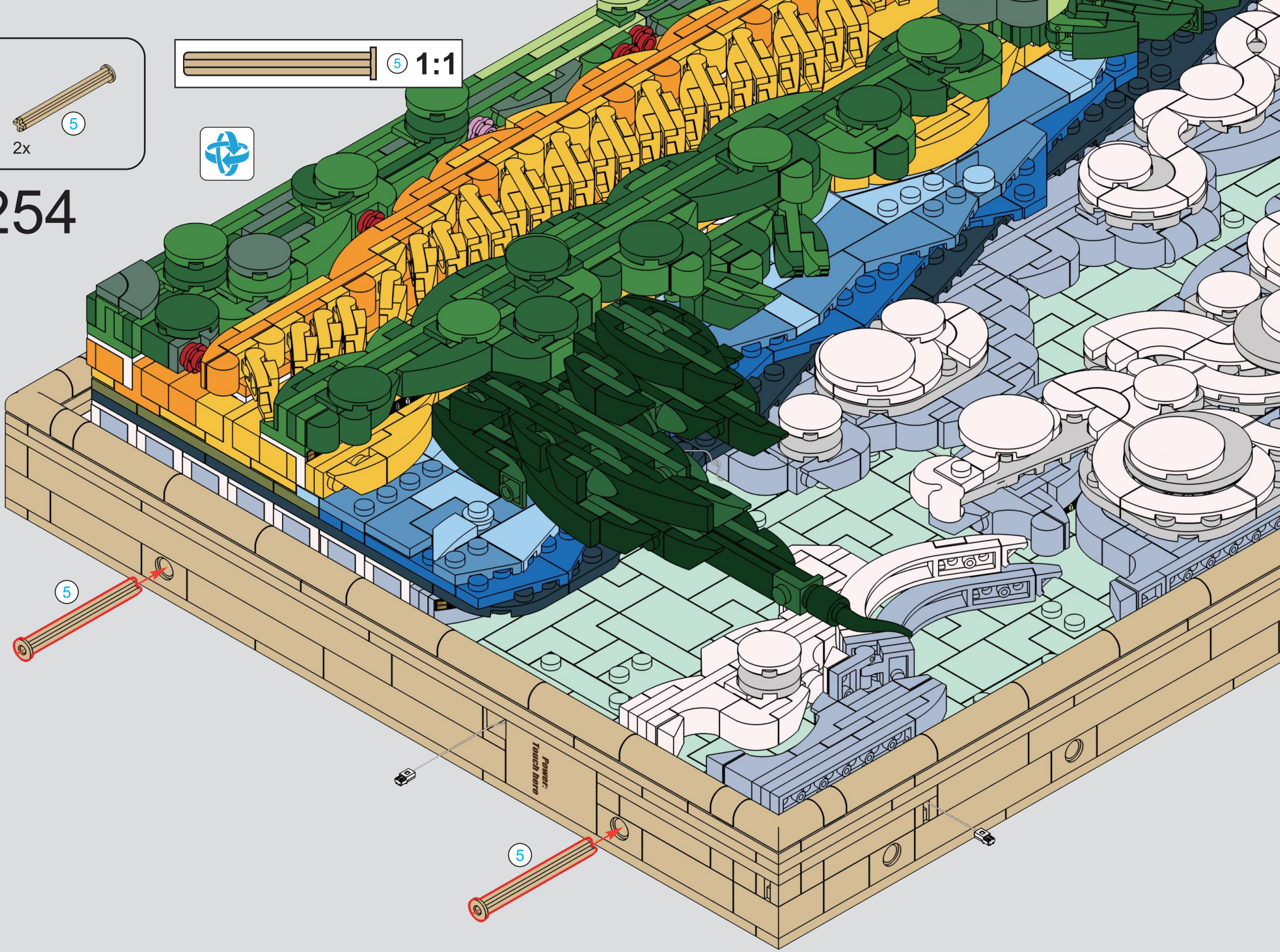

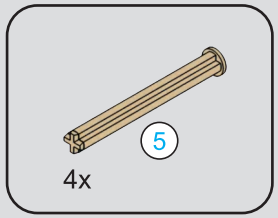

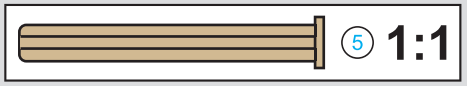

255

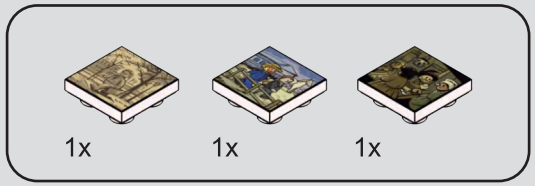

256

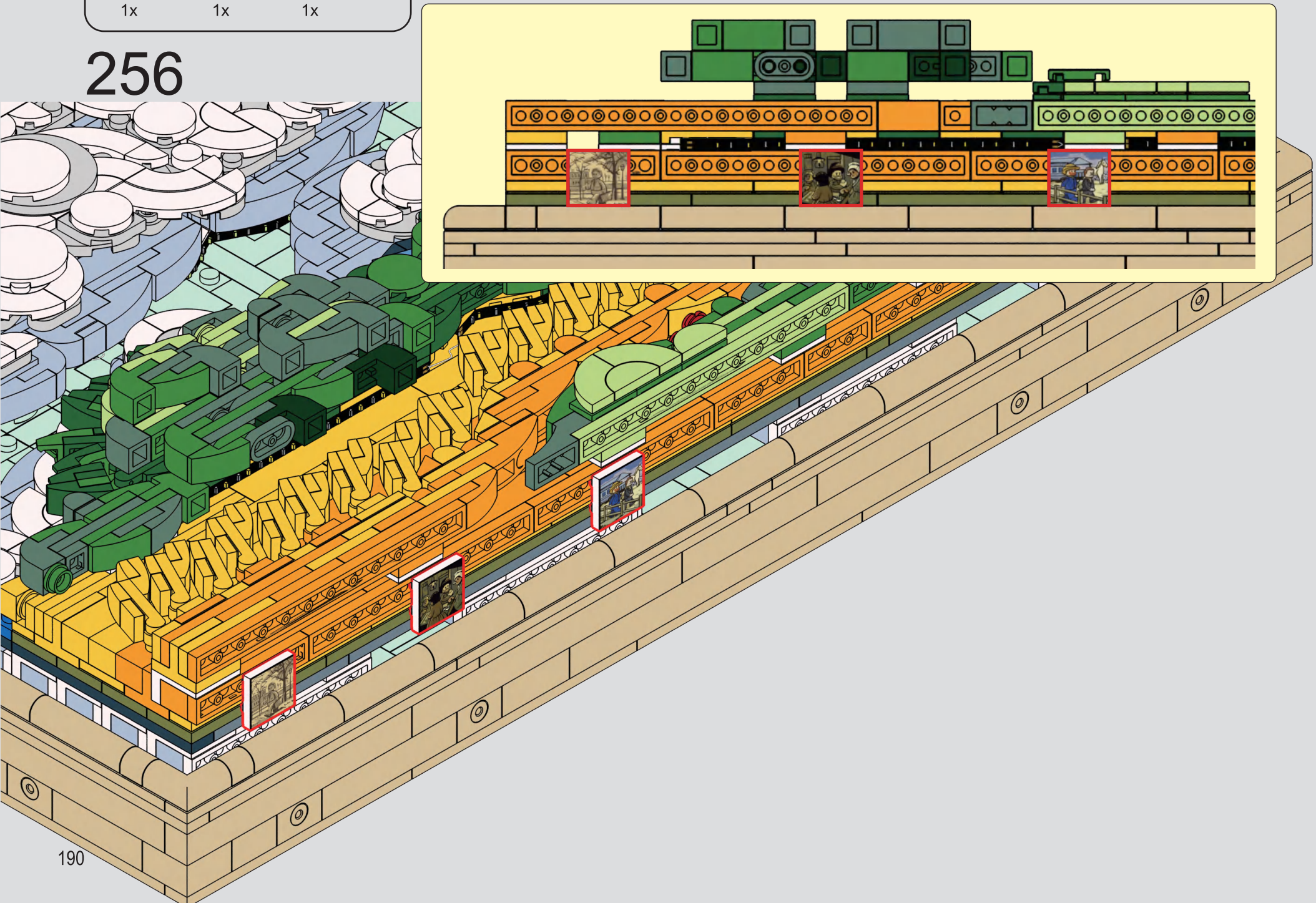

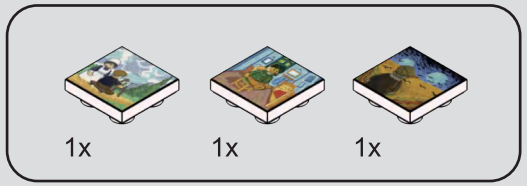

257

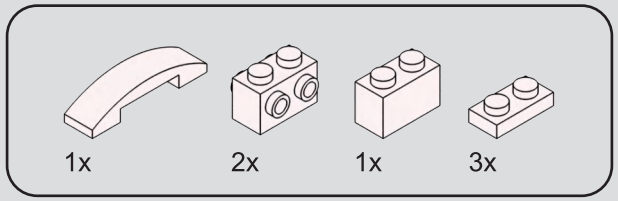

258

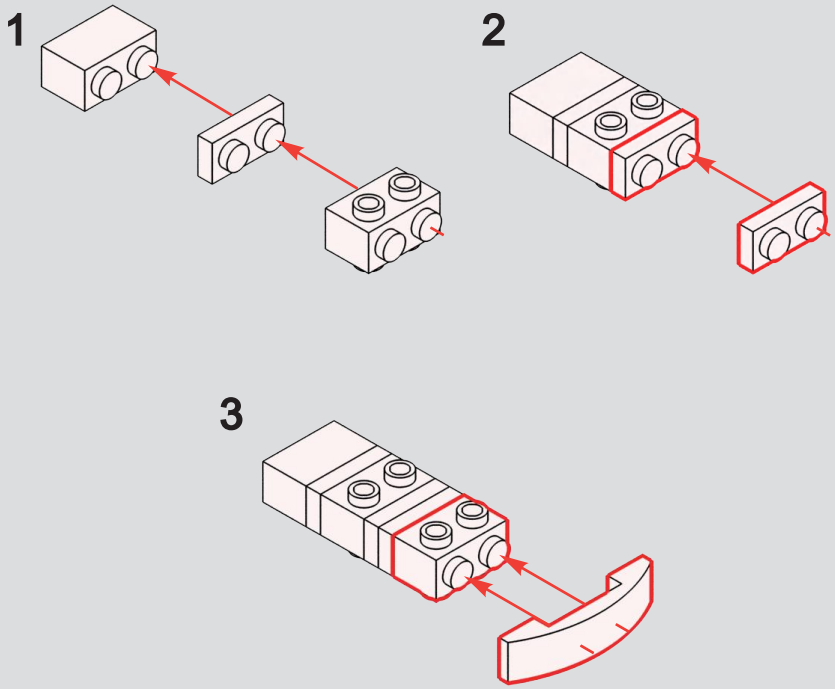

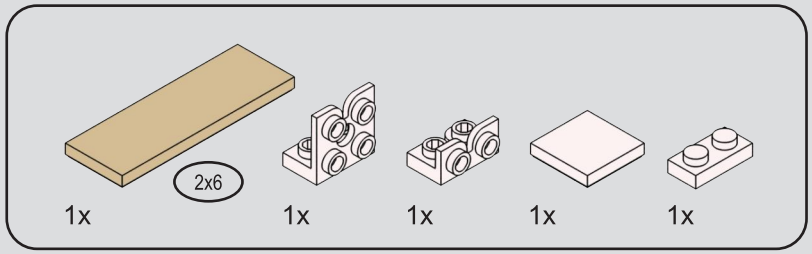

259

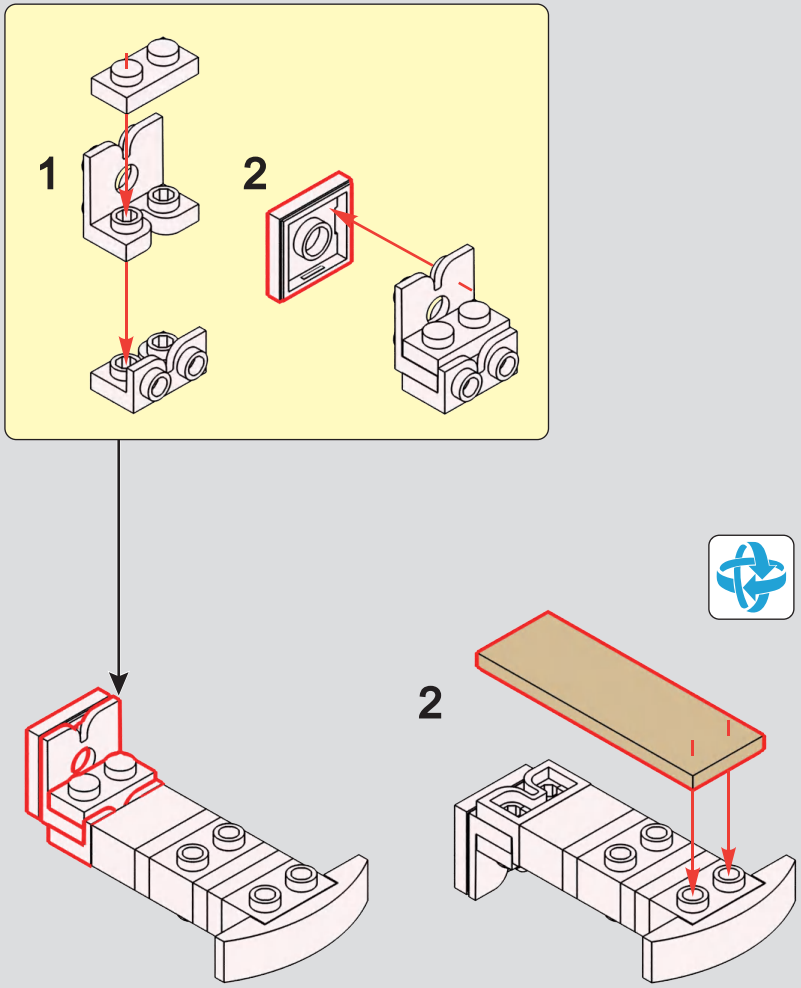

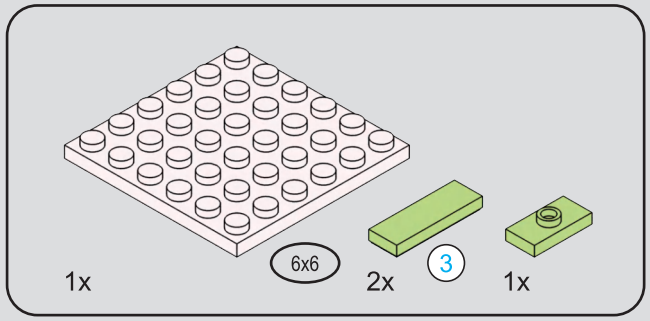

260

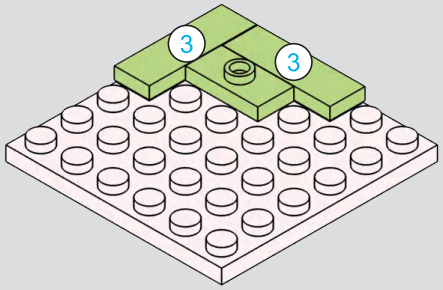

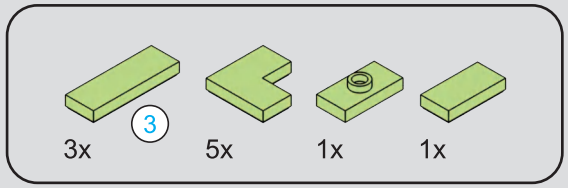

261

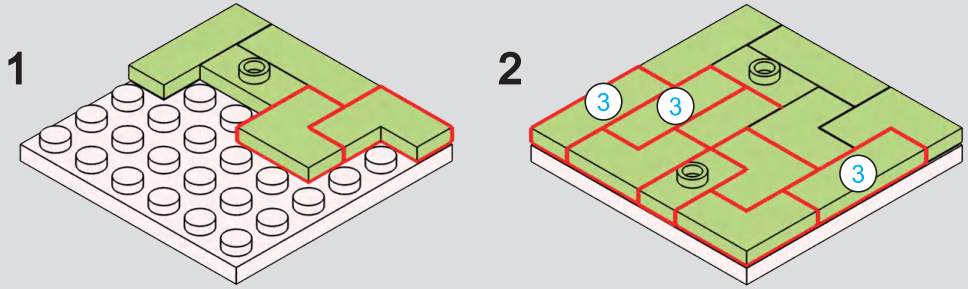

262

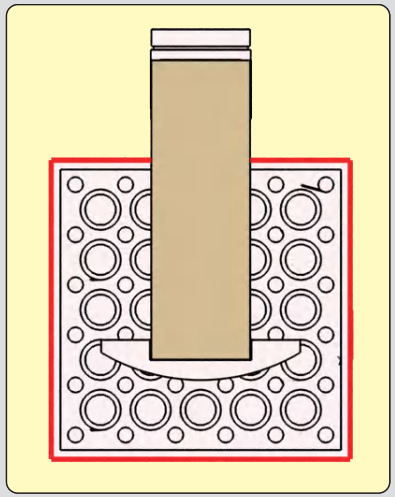

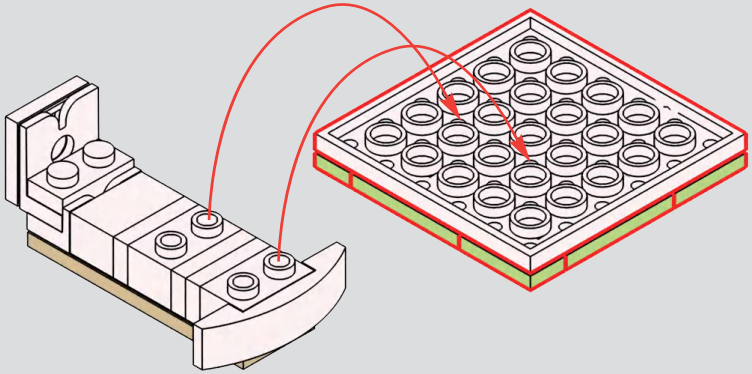

263

1

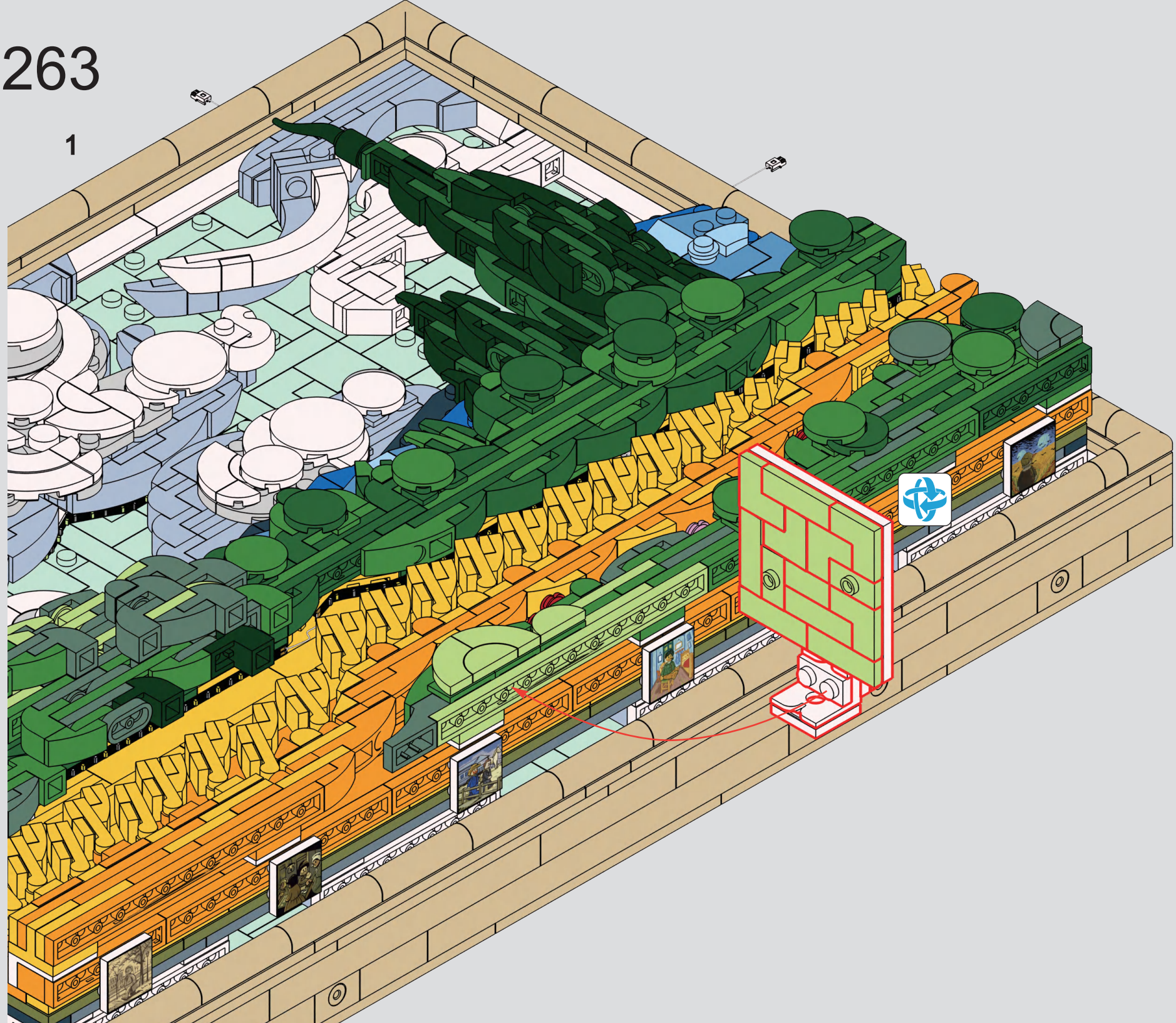

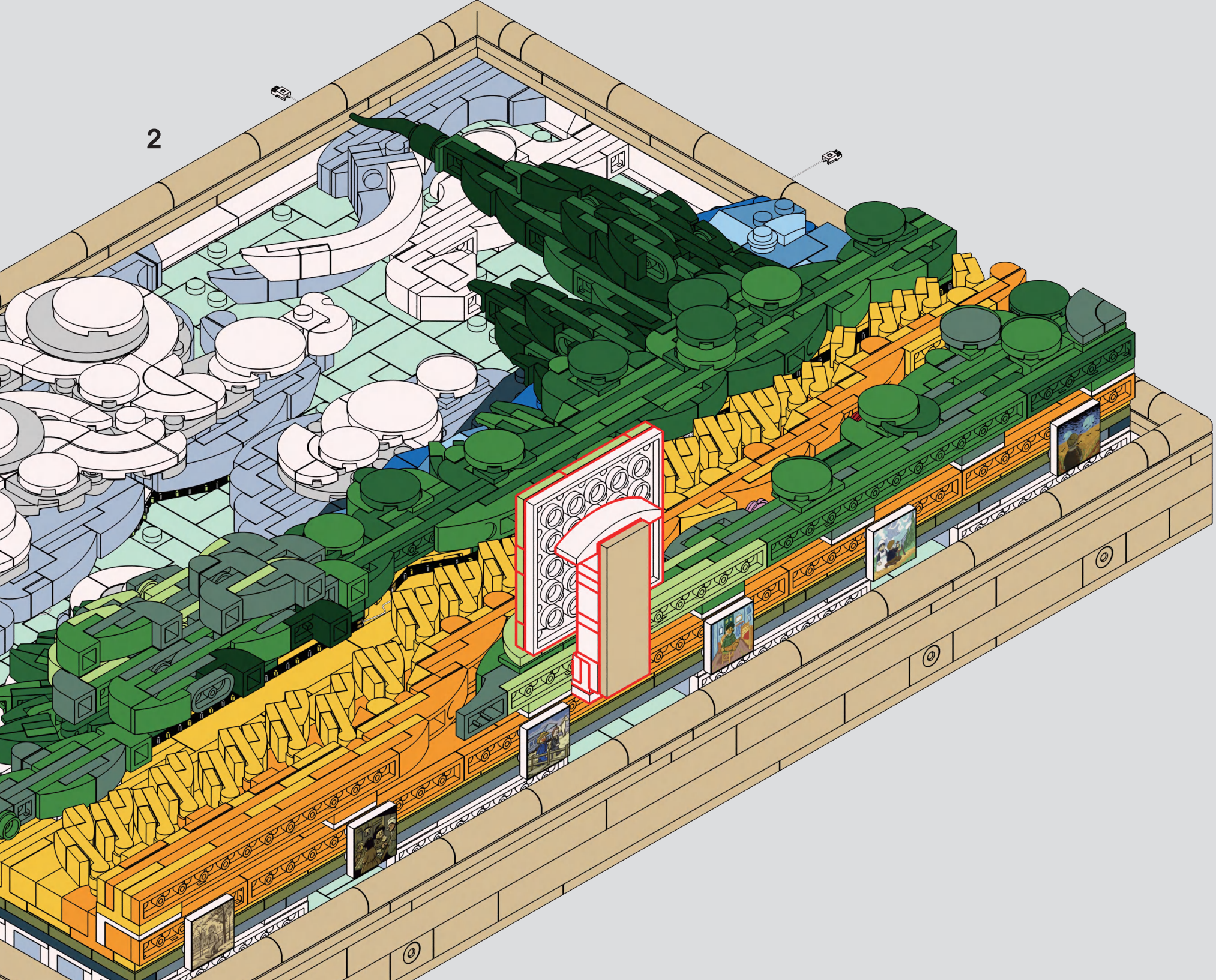
2

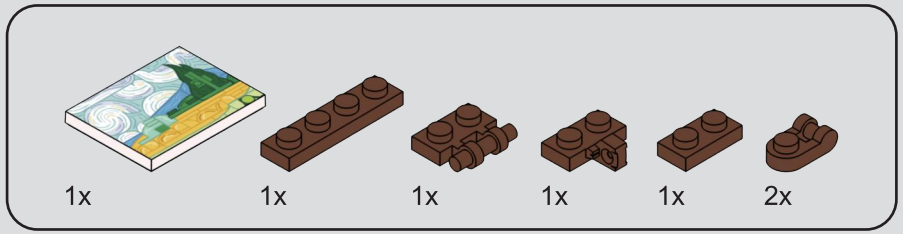

264

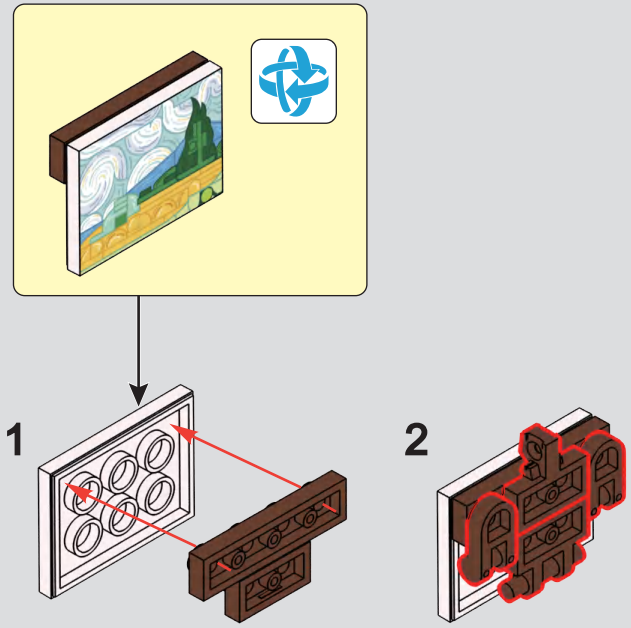

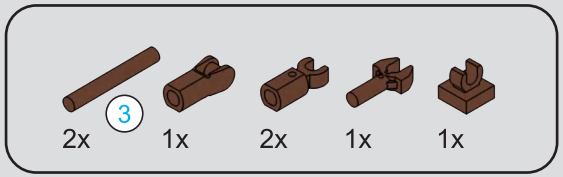

265

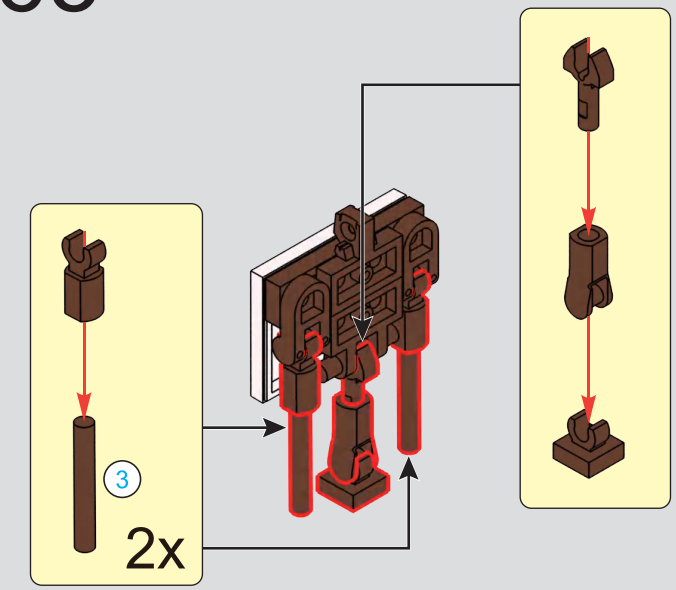

266

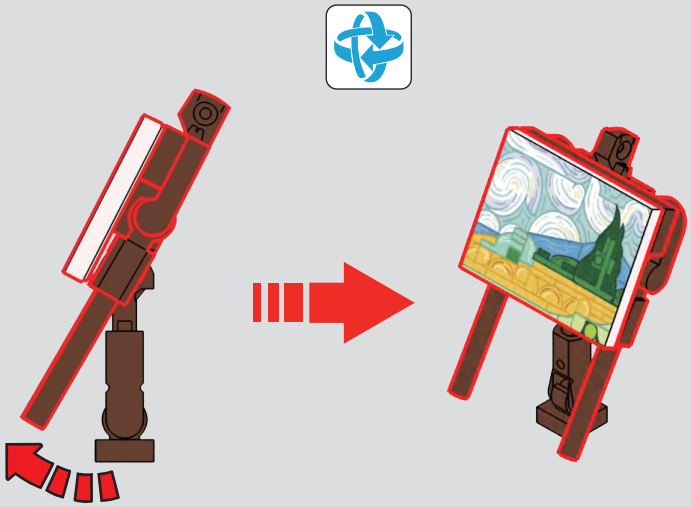

267

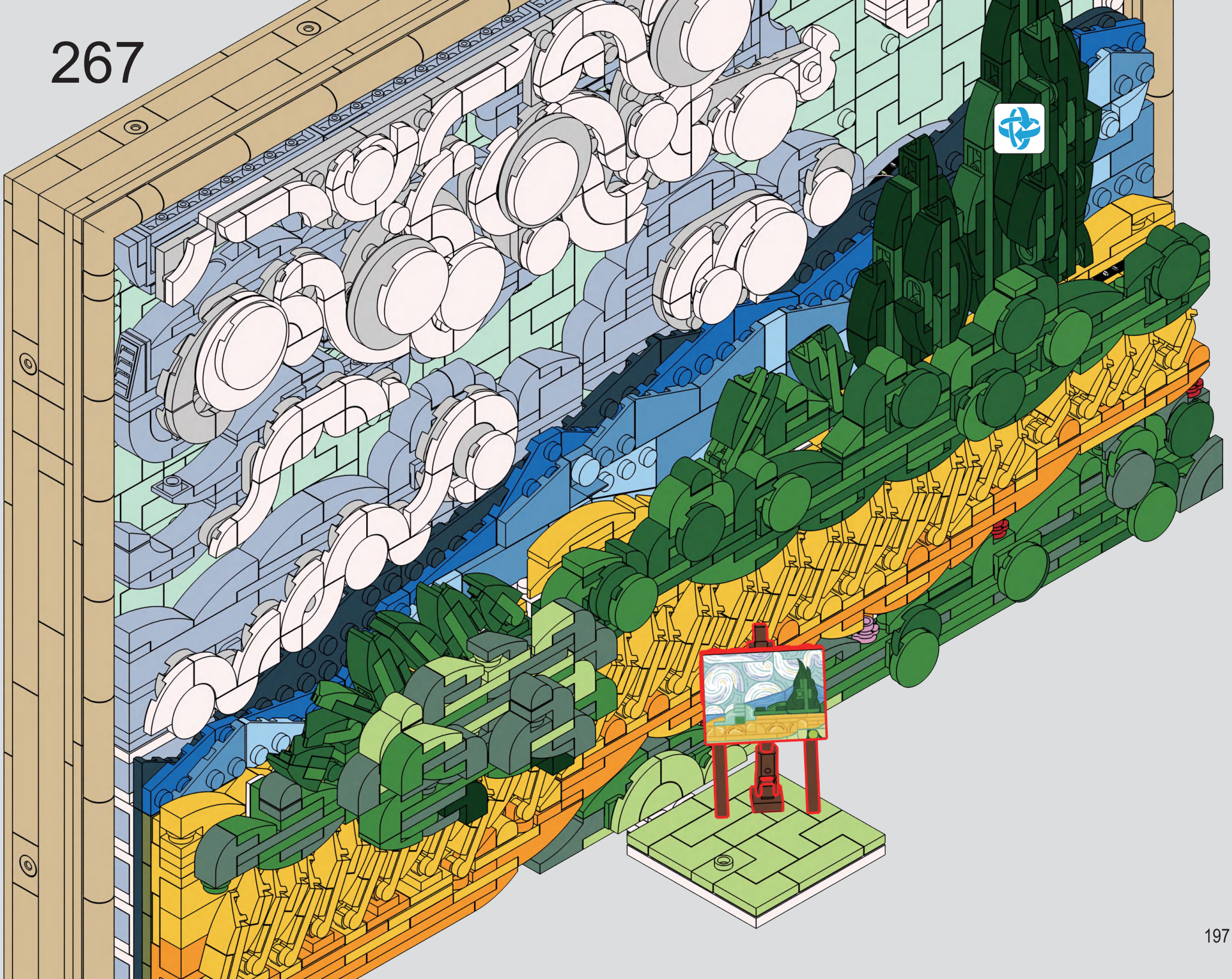

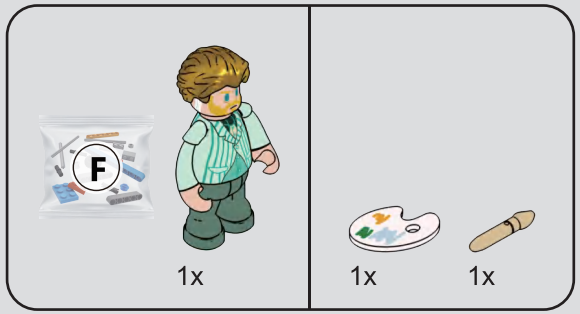

268

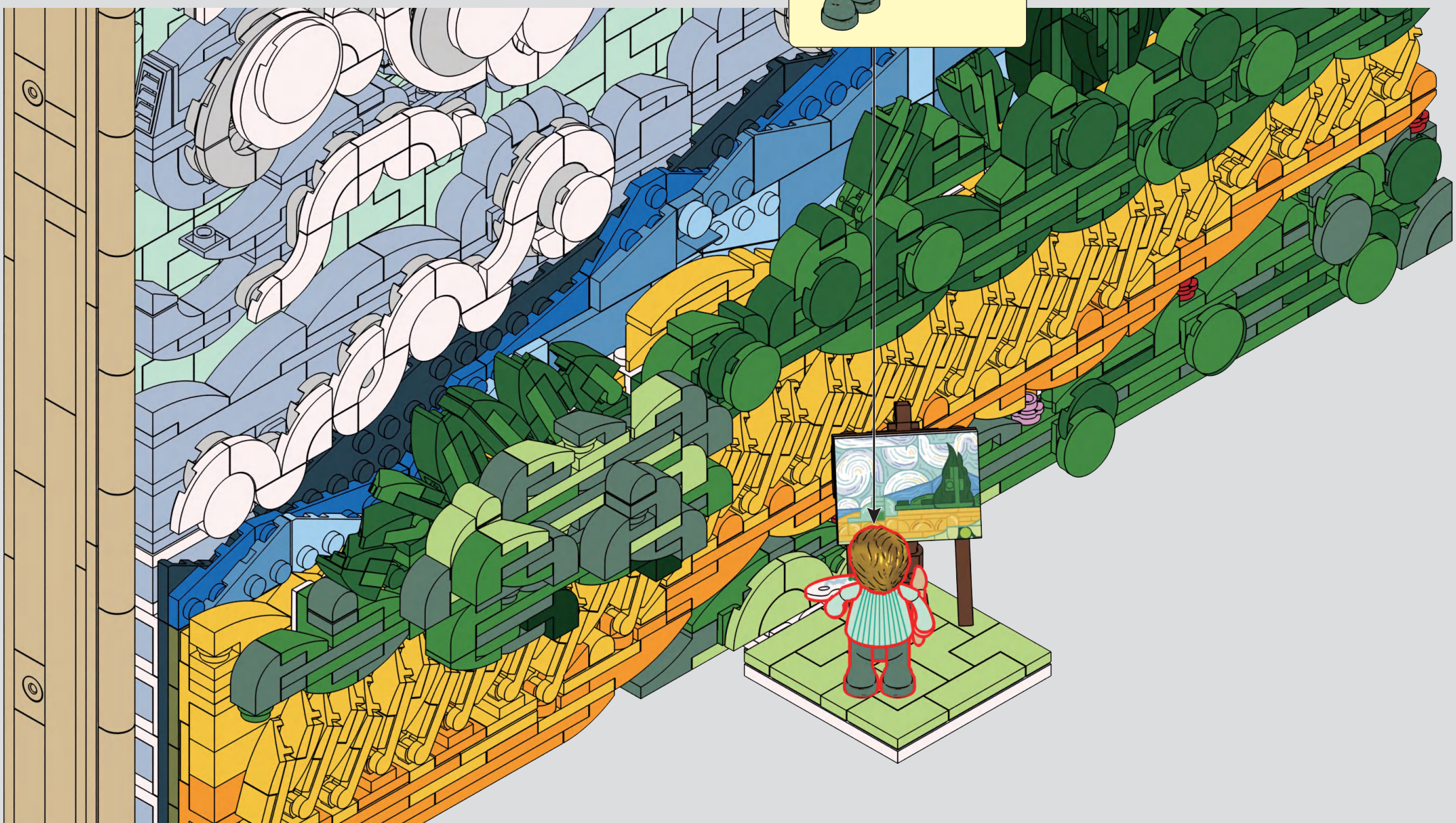

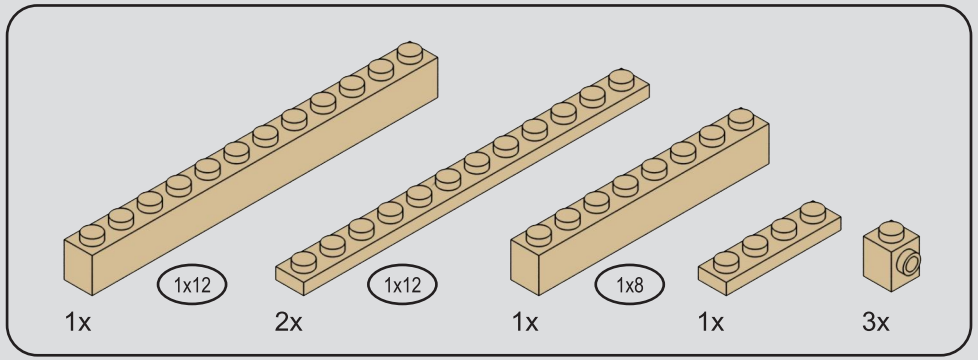

269

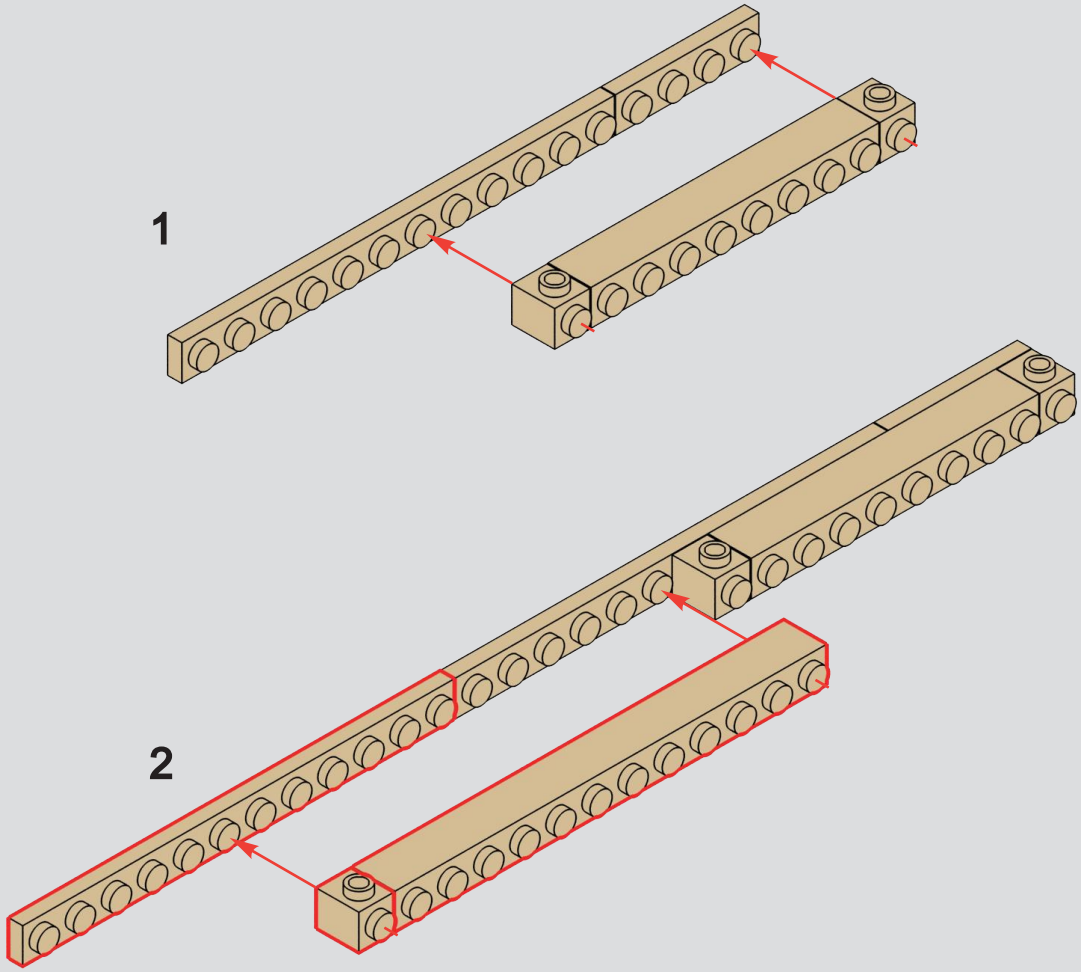

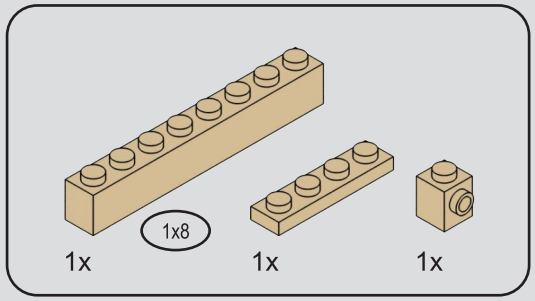

270

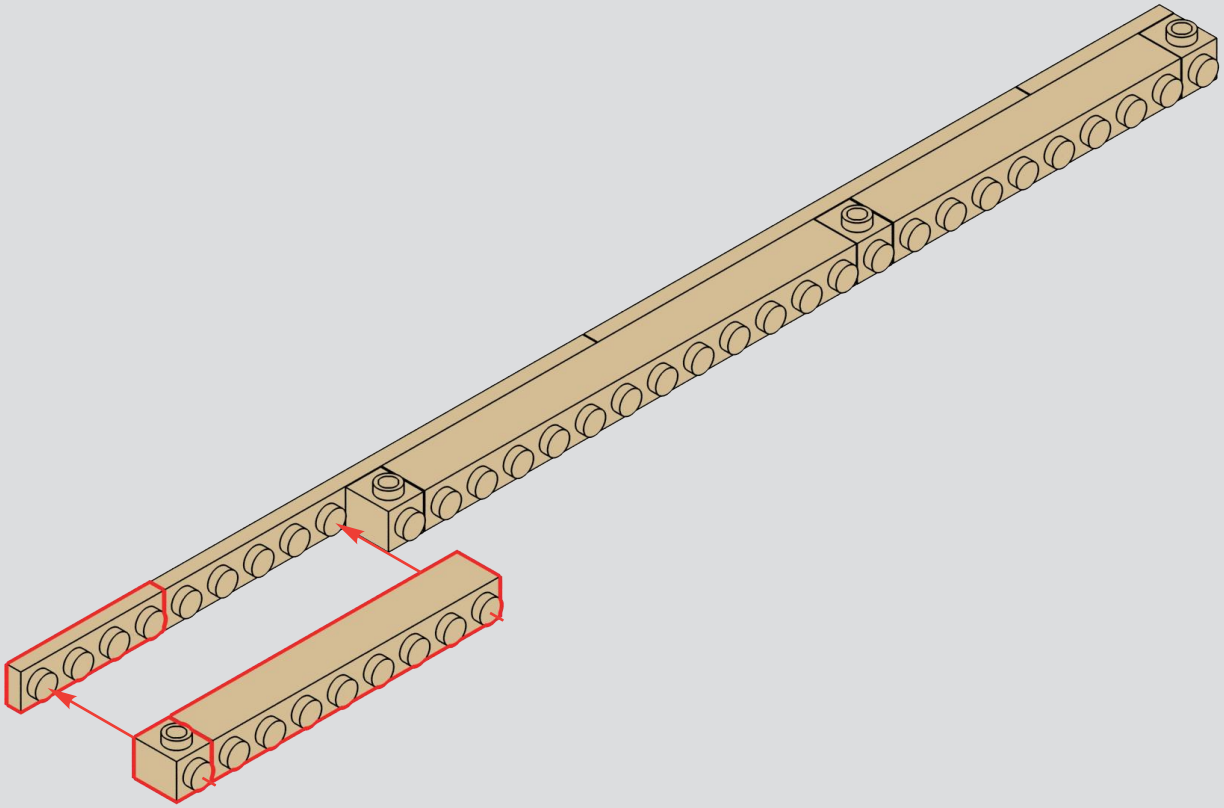

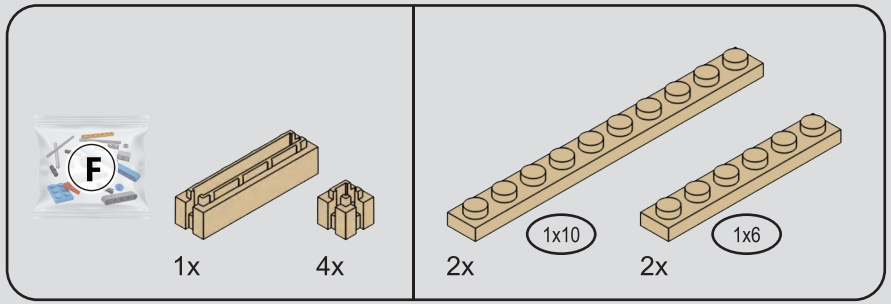

271

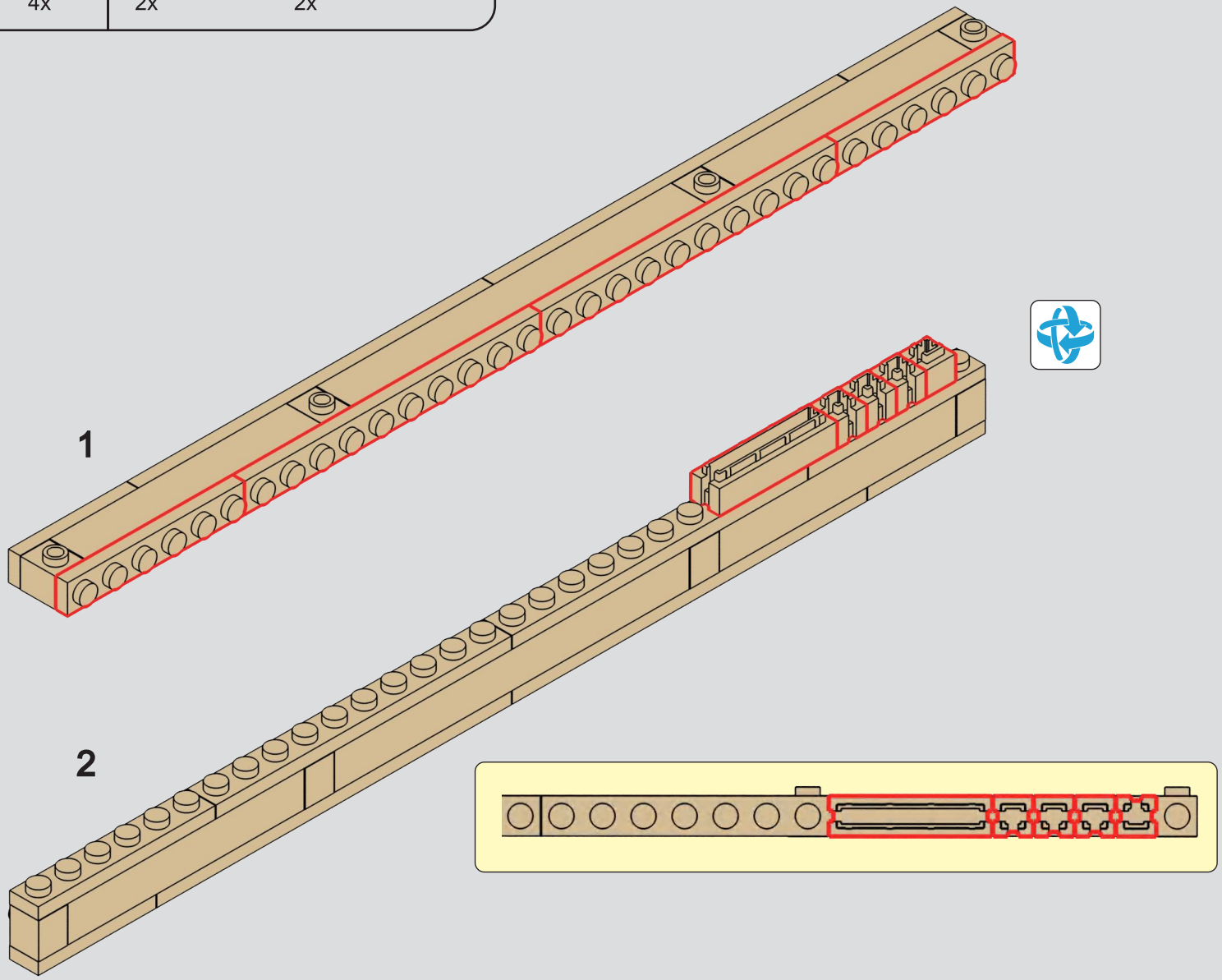

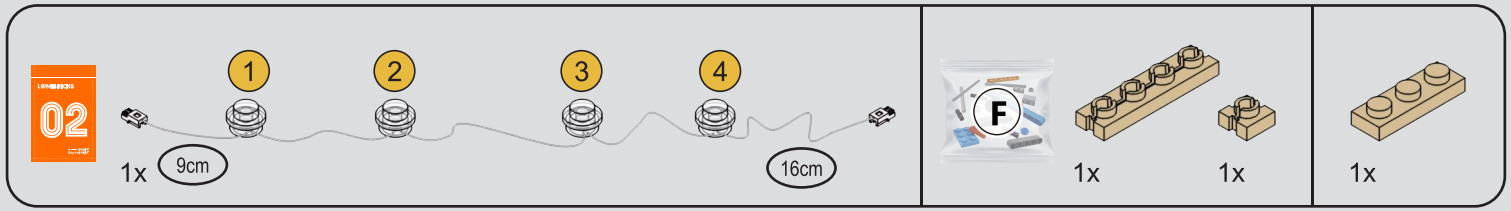

272

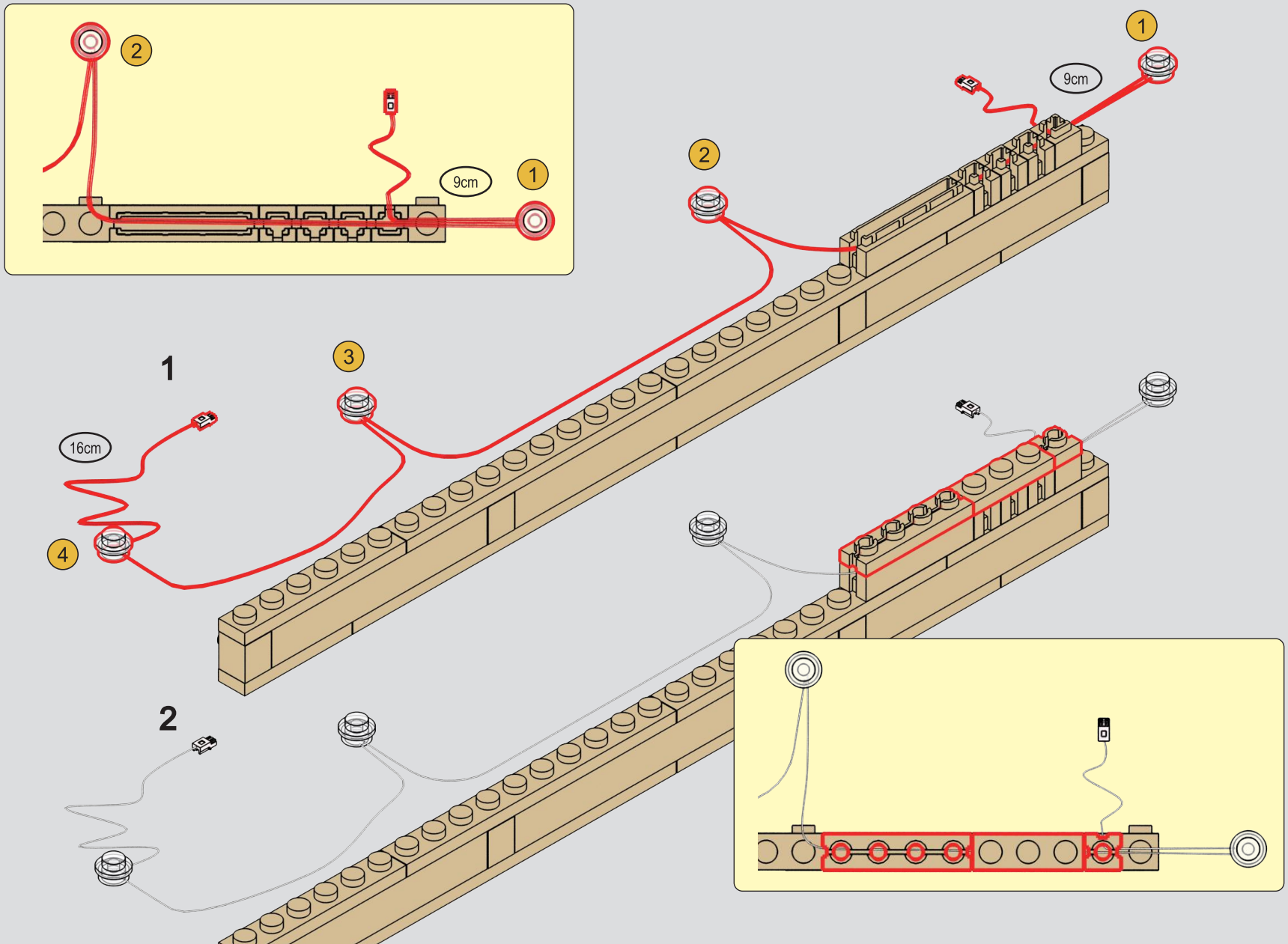

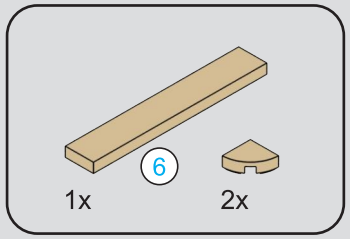

273

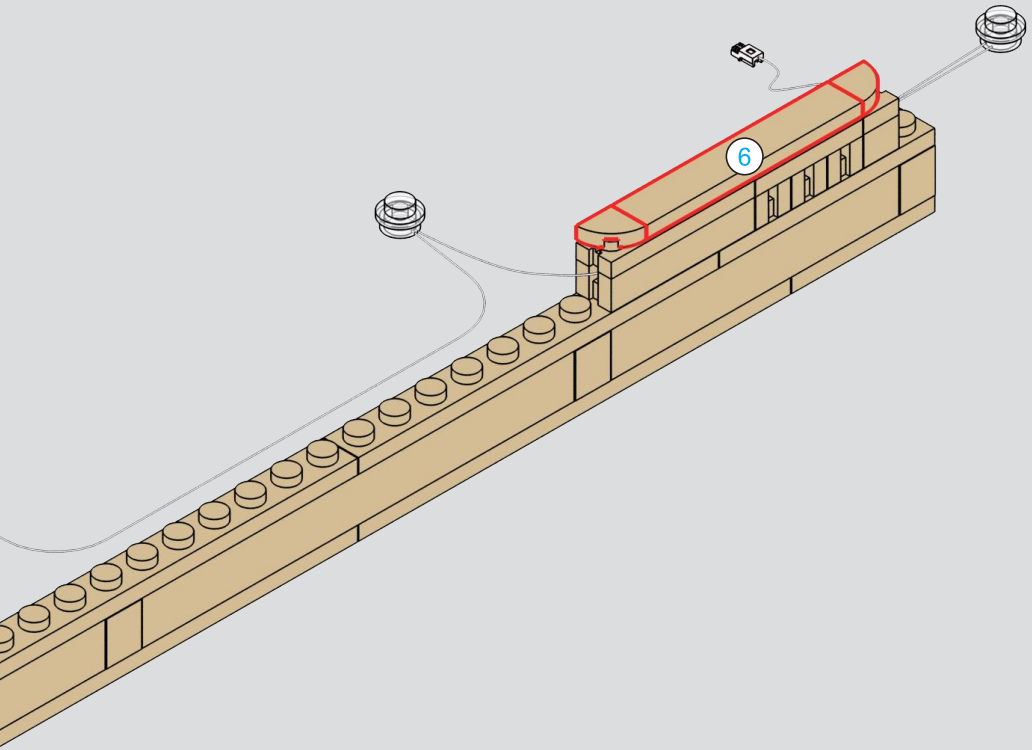

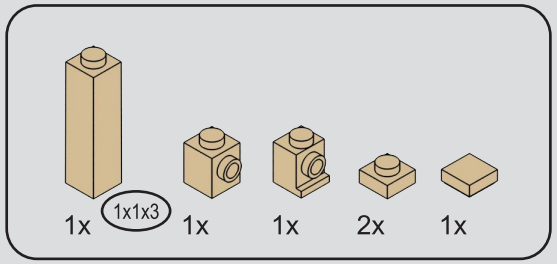

274

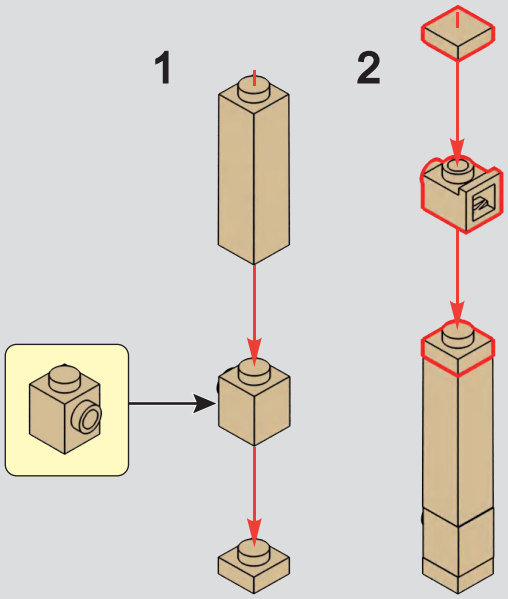

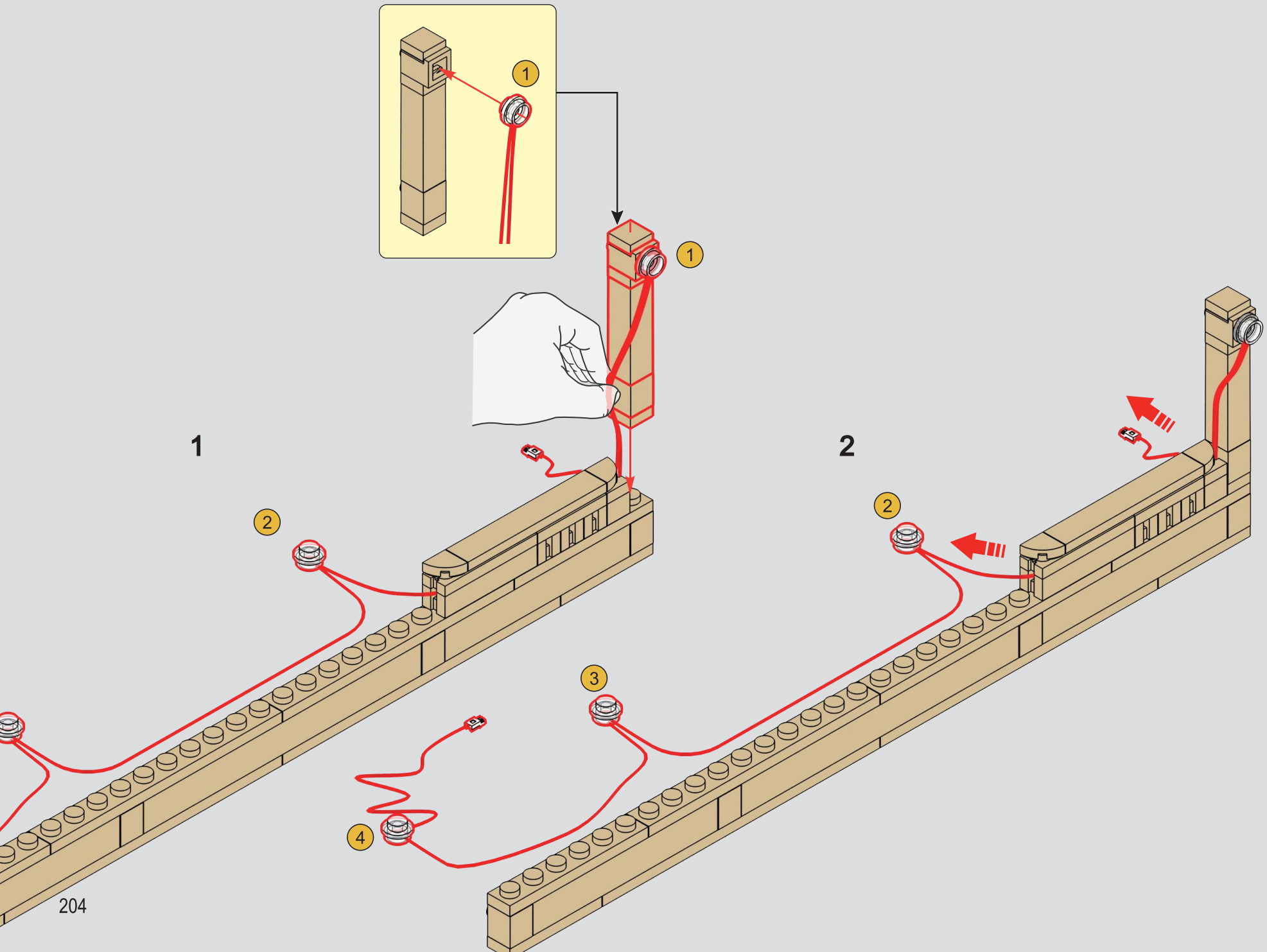
1
2
1
2
3
4
1
2

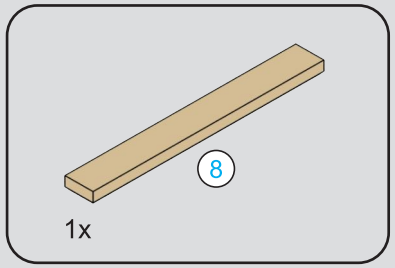

276

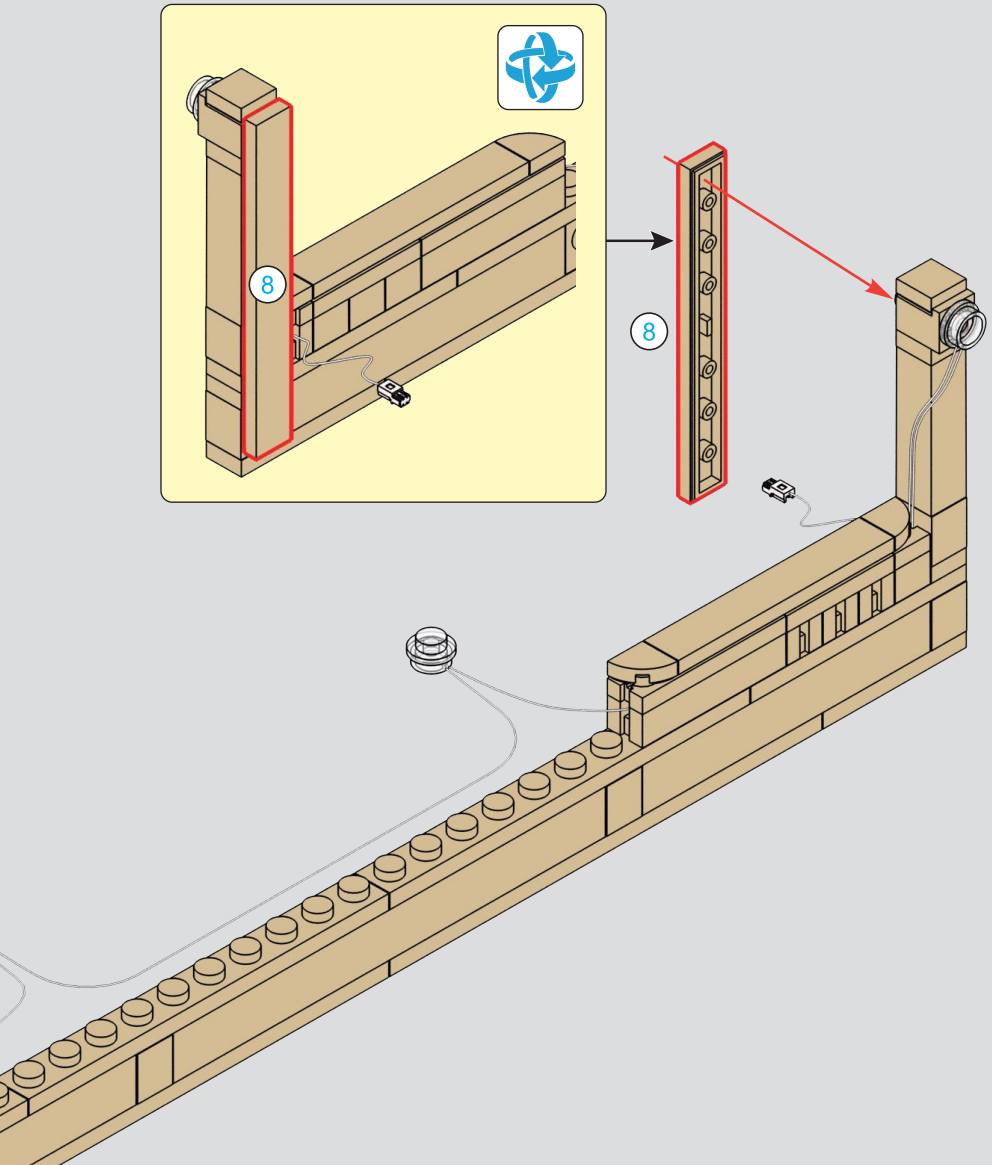

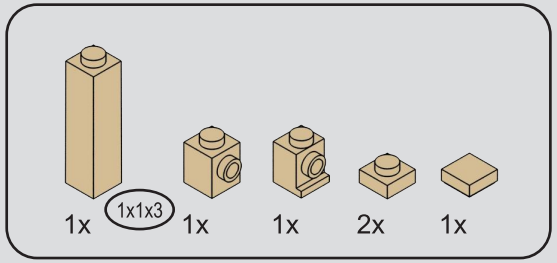

277

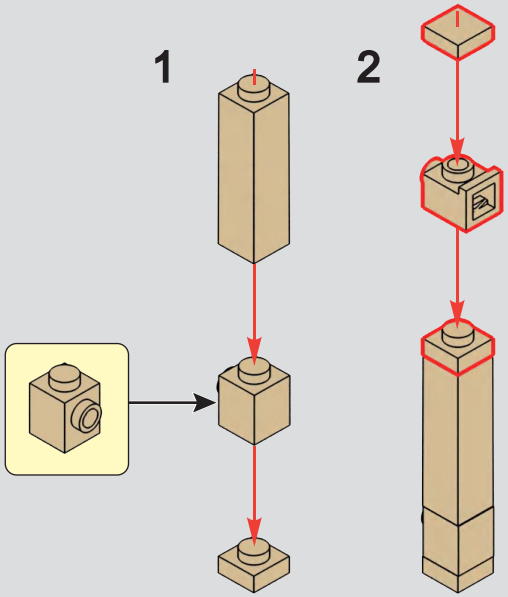

278

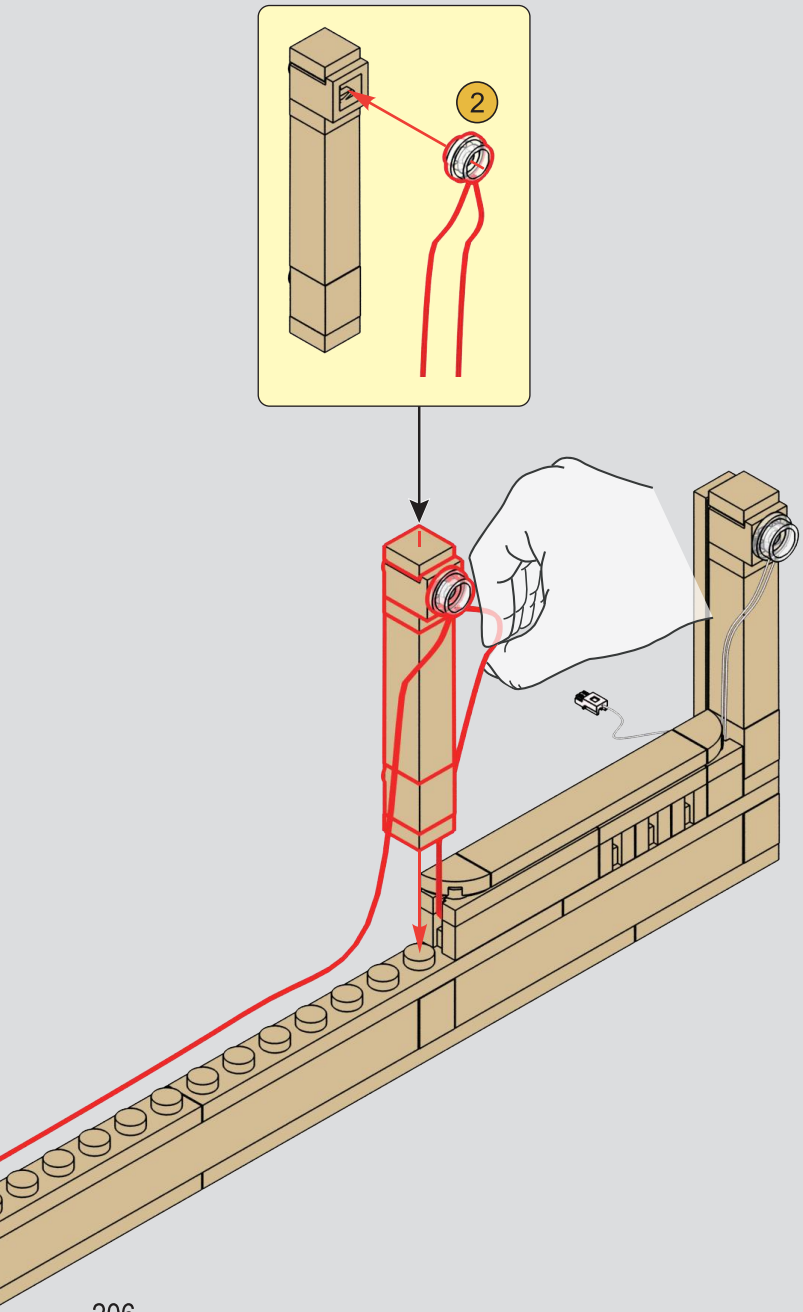

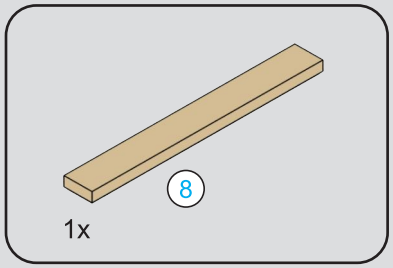

279

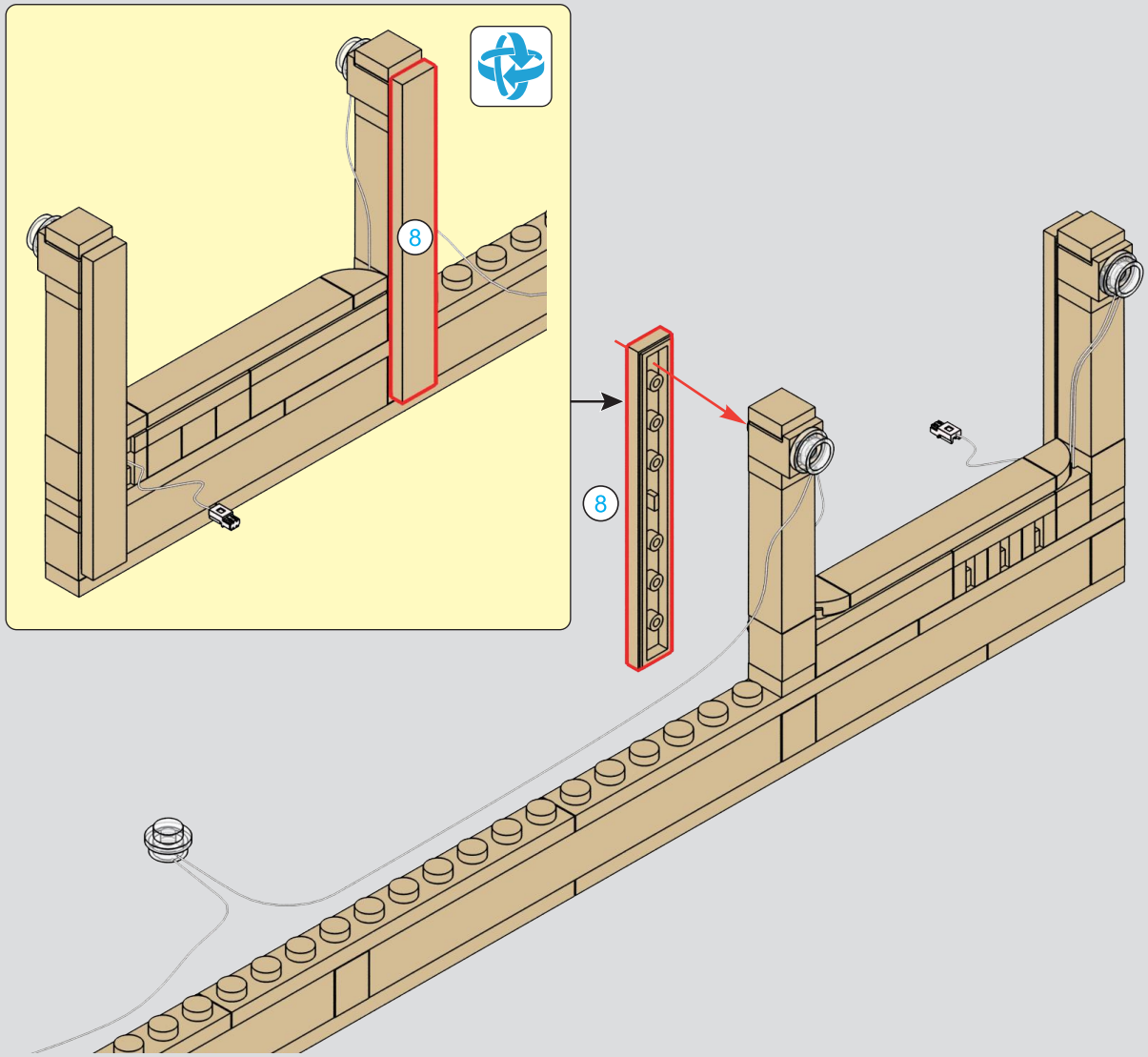

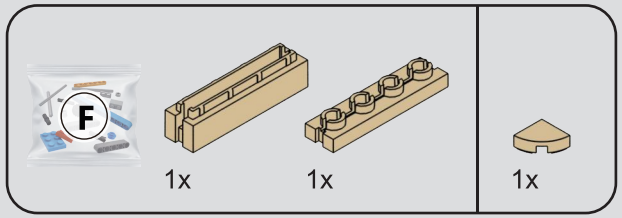

280

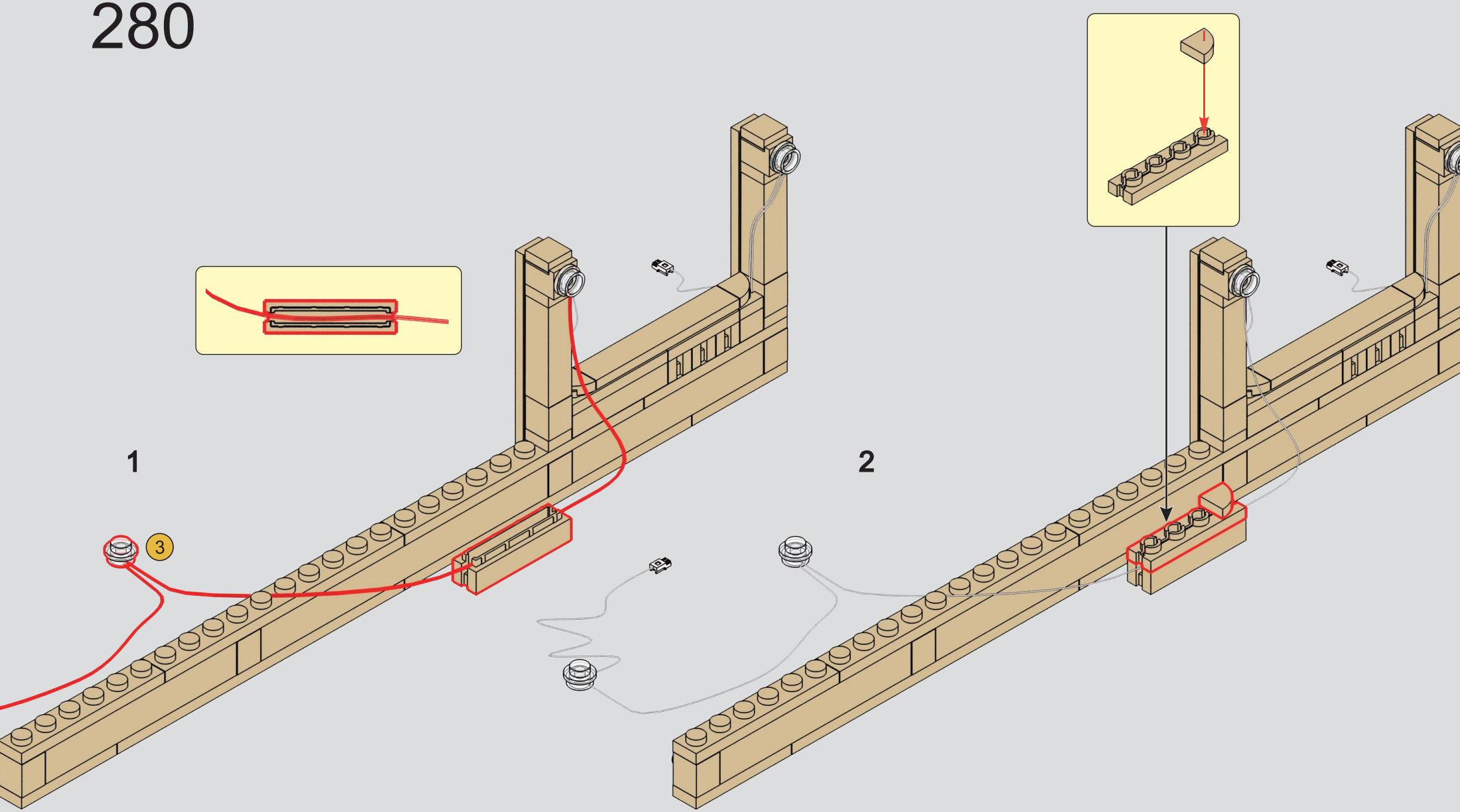

281

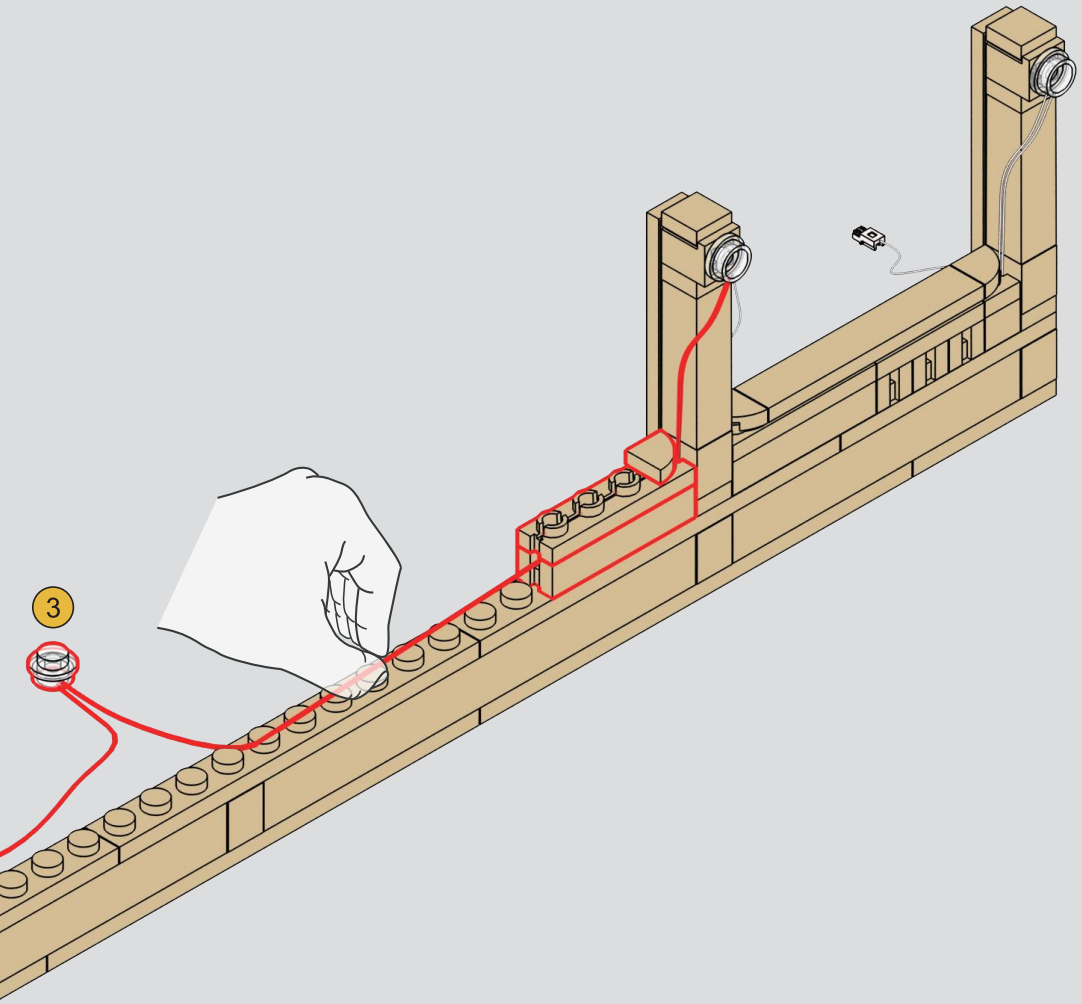

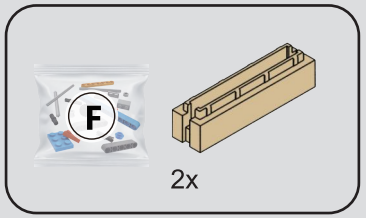

282

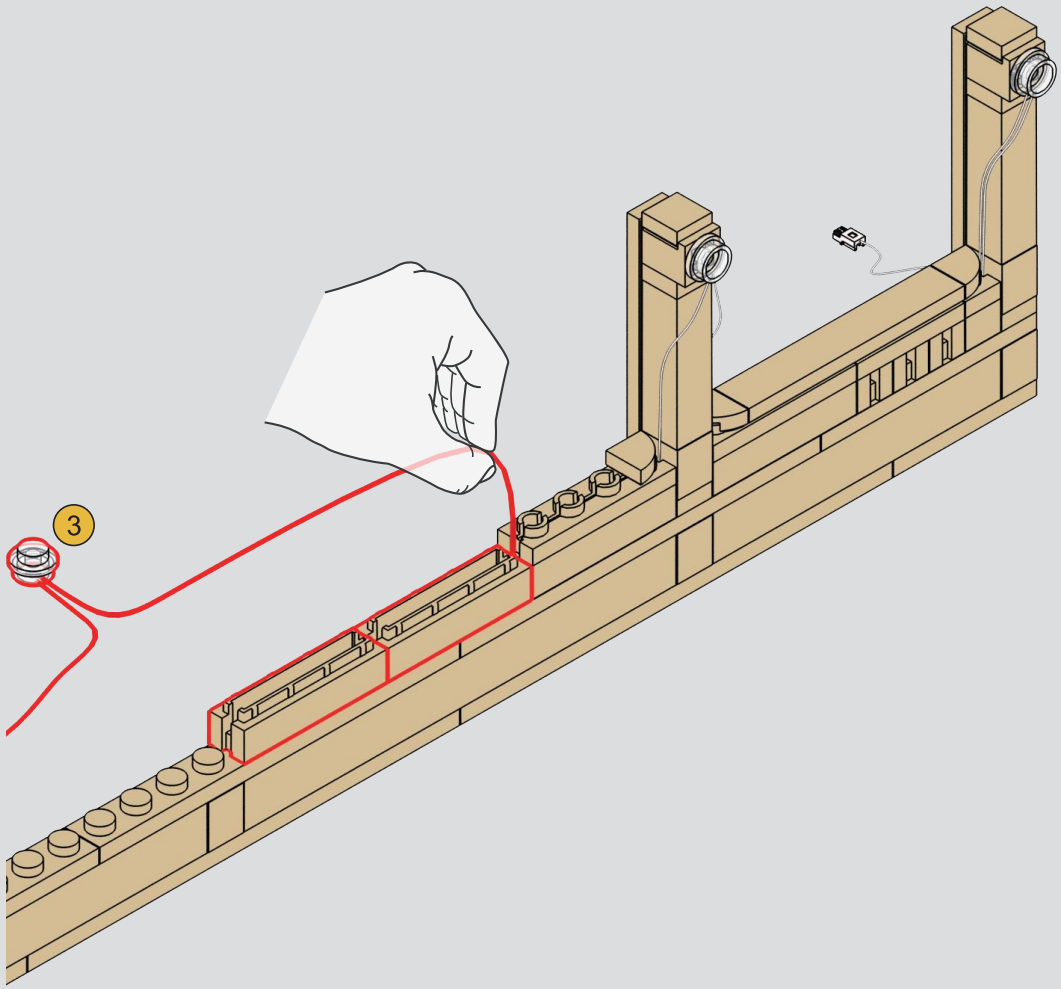

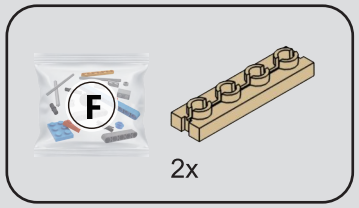

283

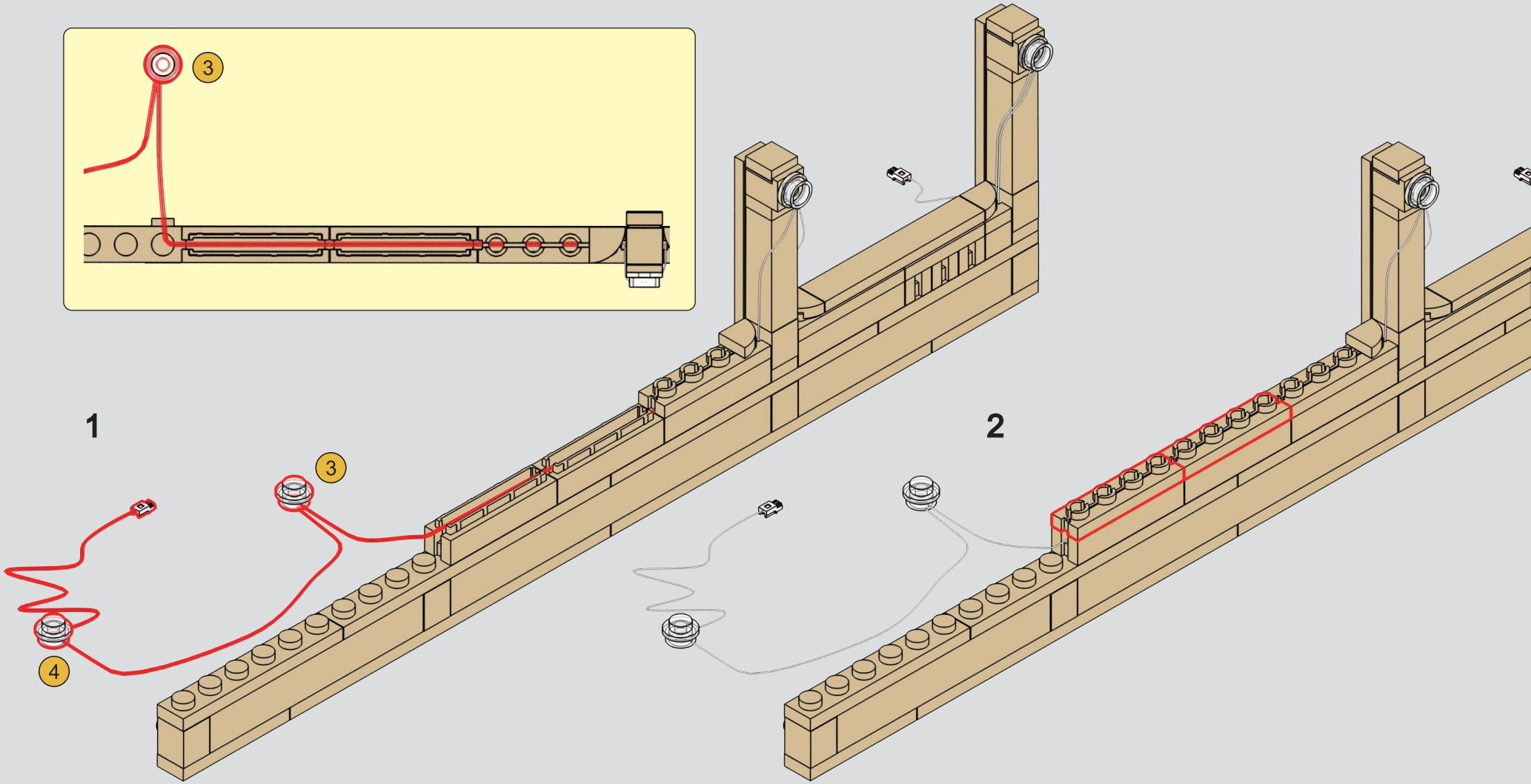

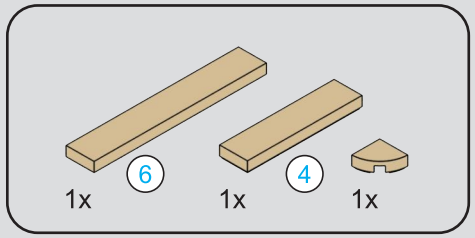

284

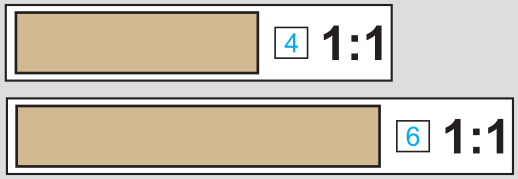

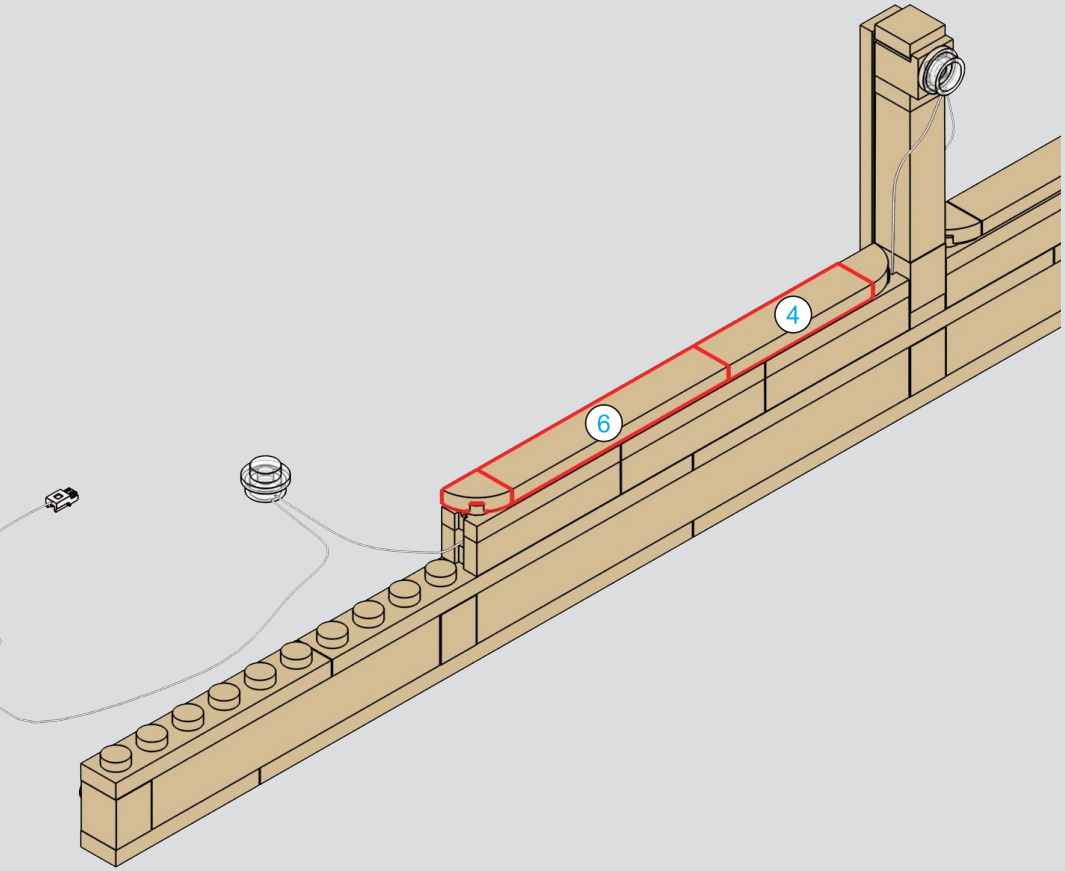

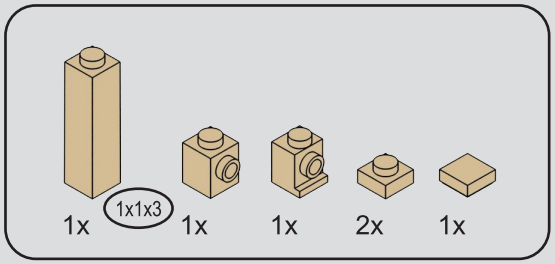

285

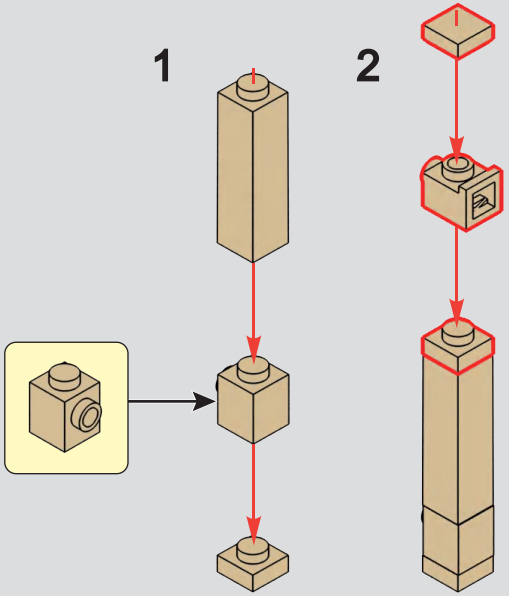

286

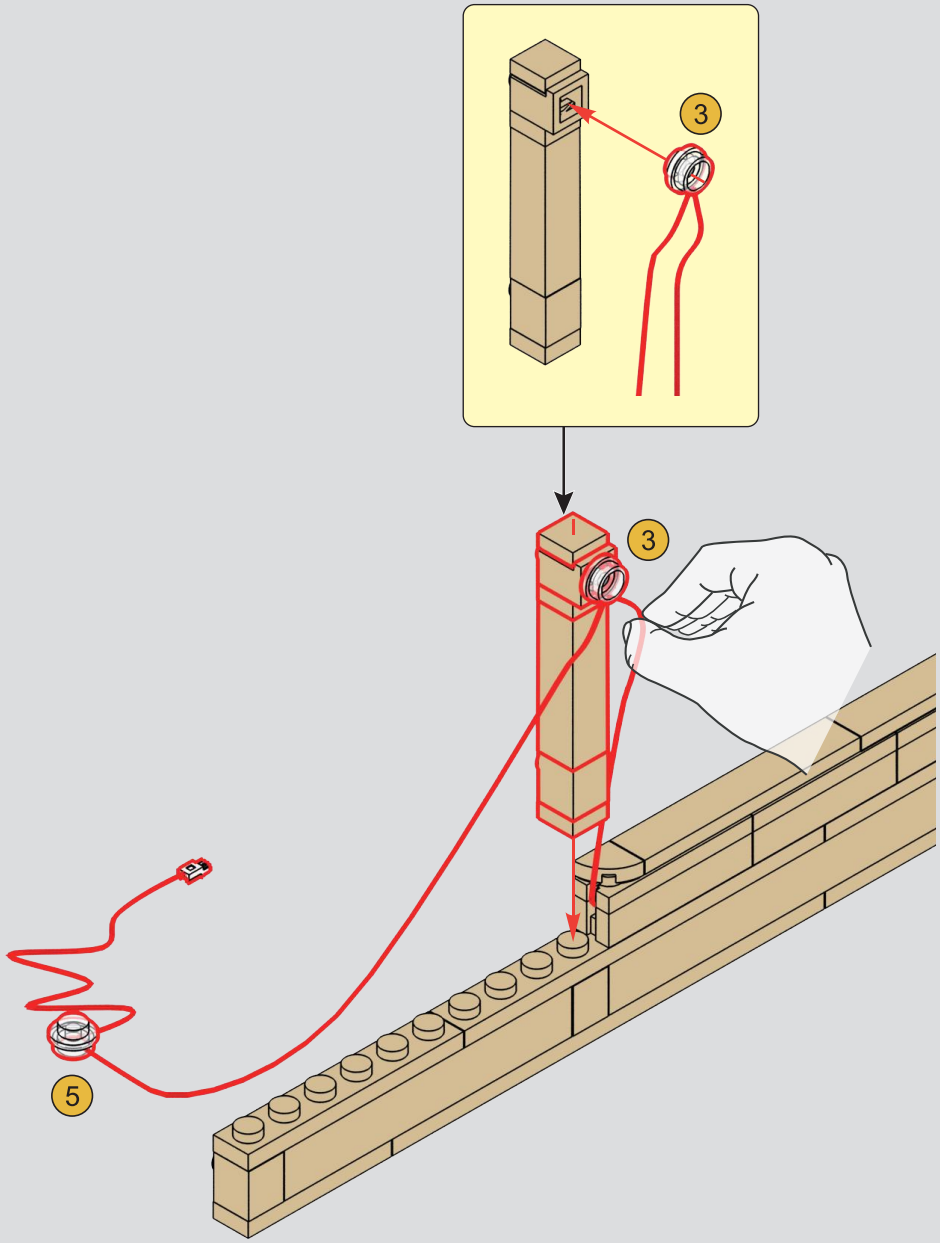

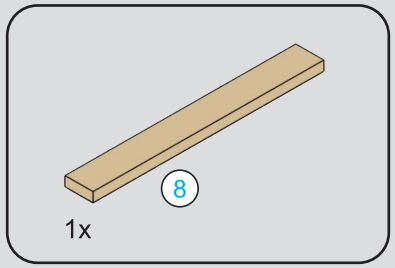

287

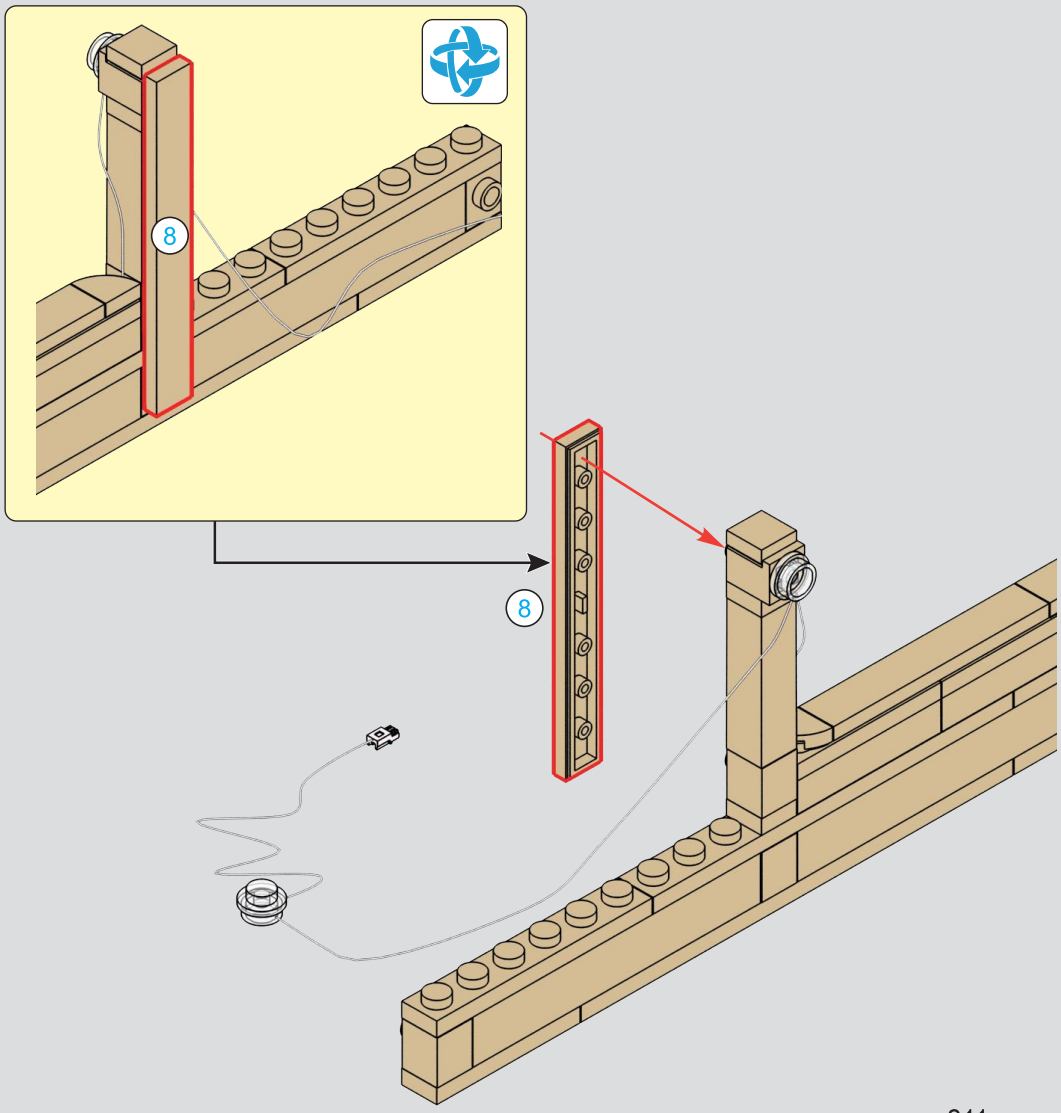

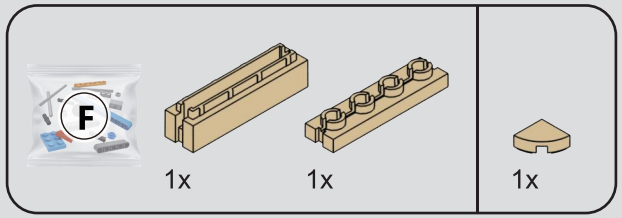

288

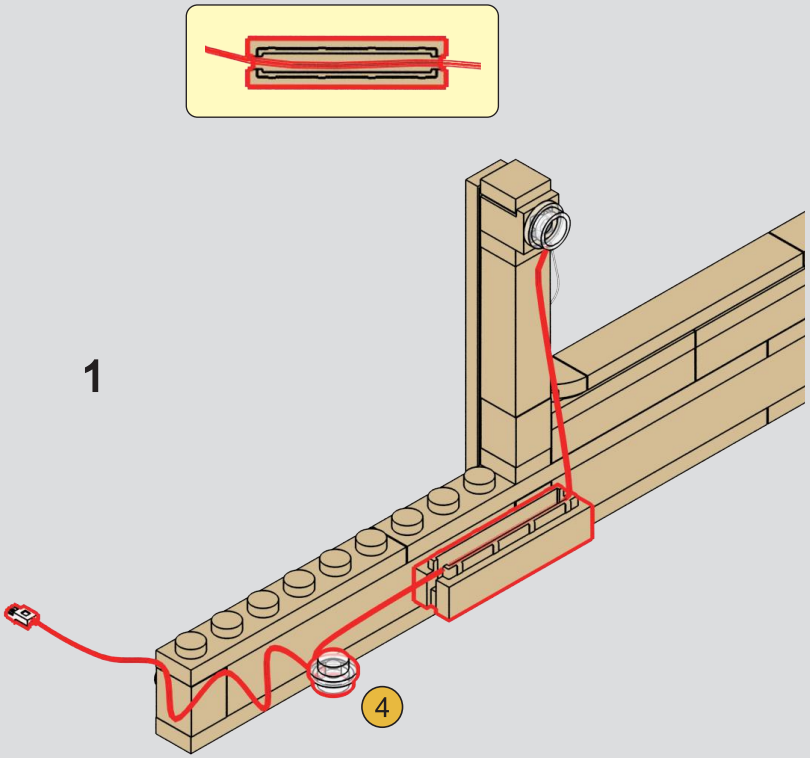

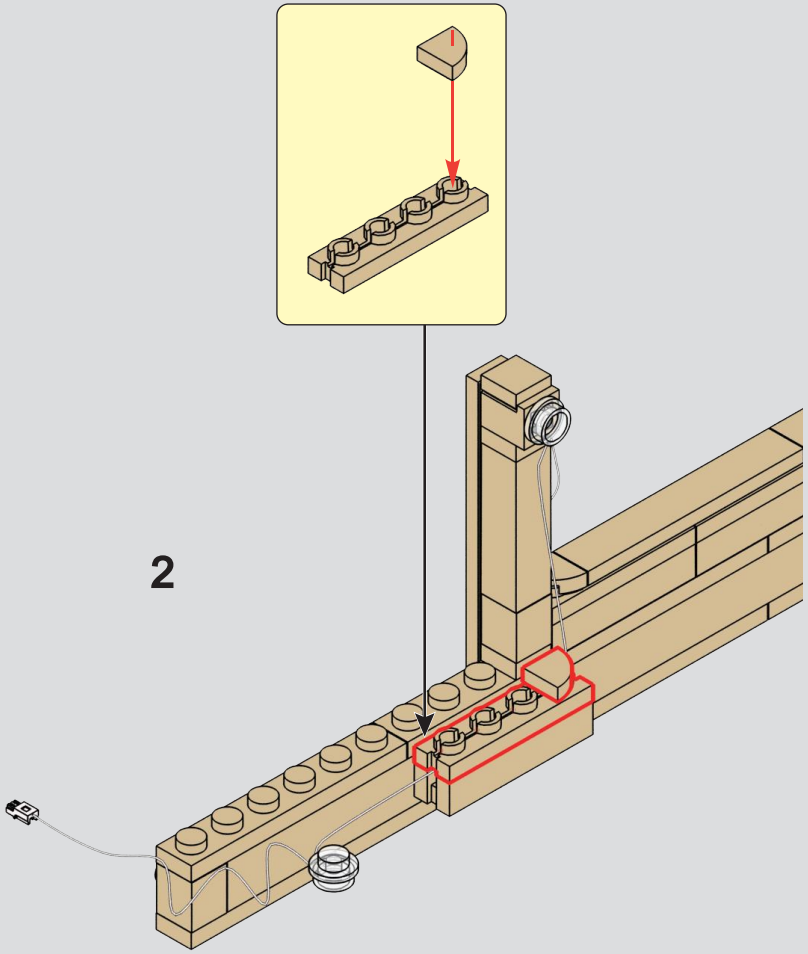

289

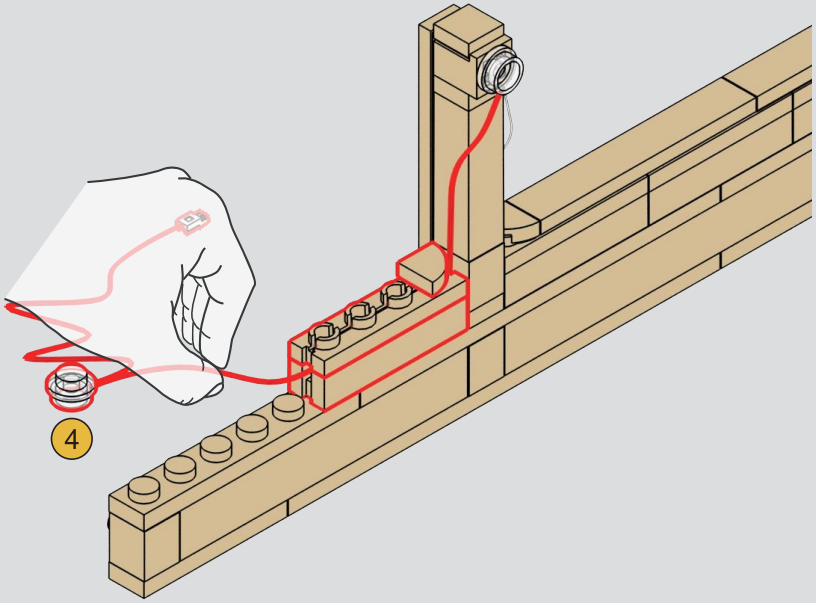

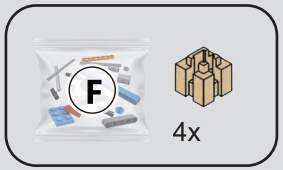

290

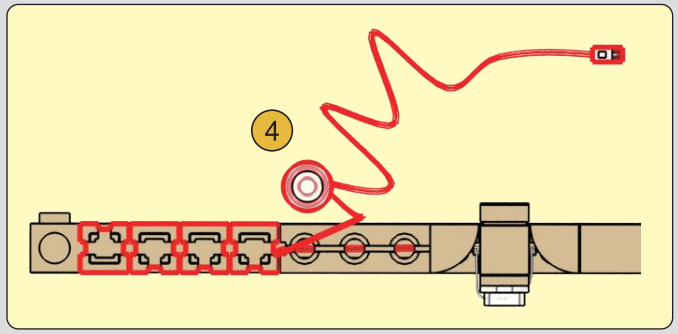

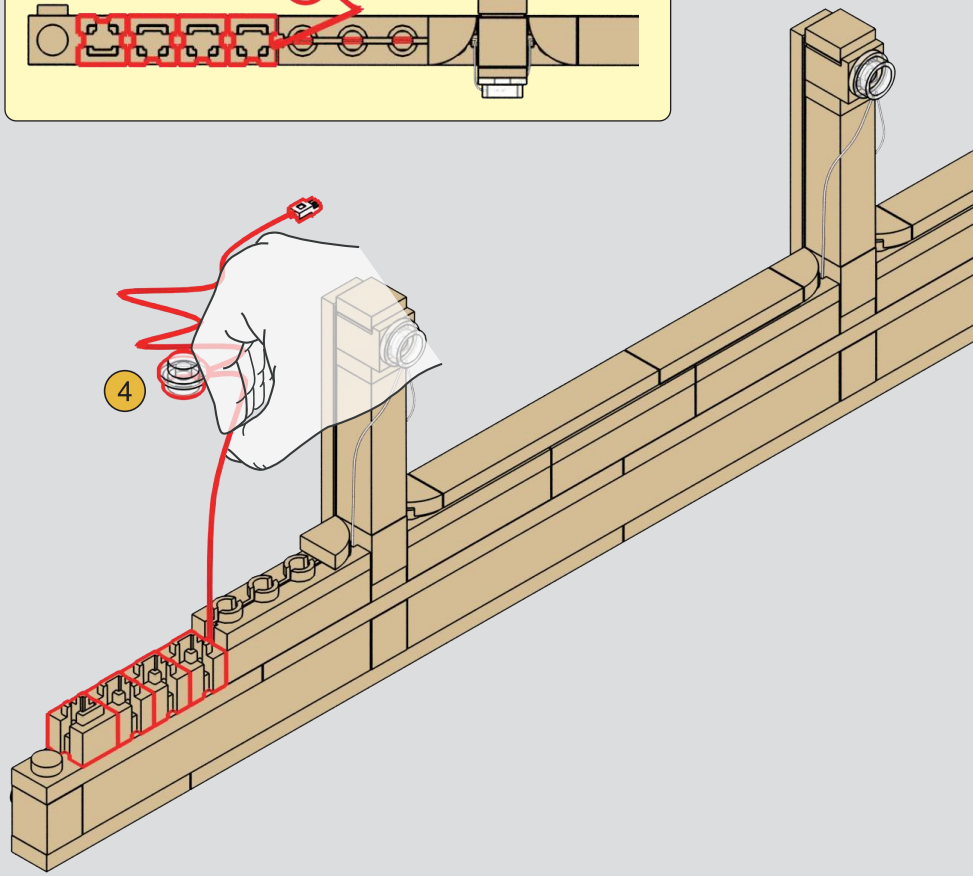

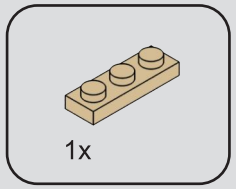

291

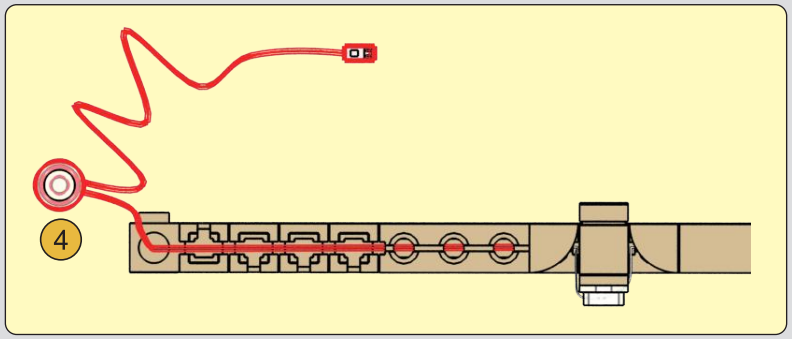

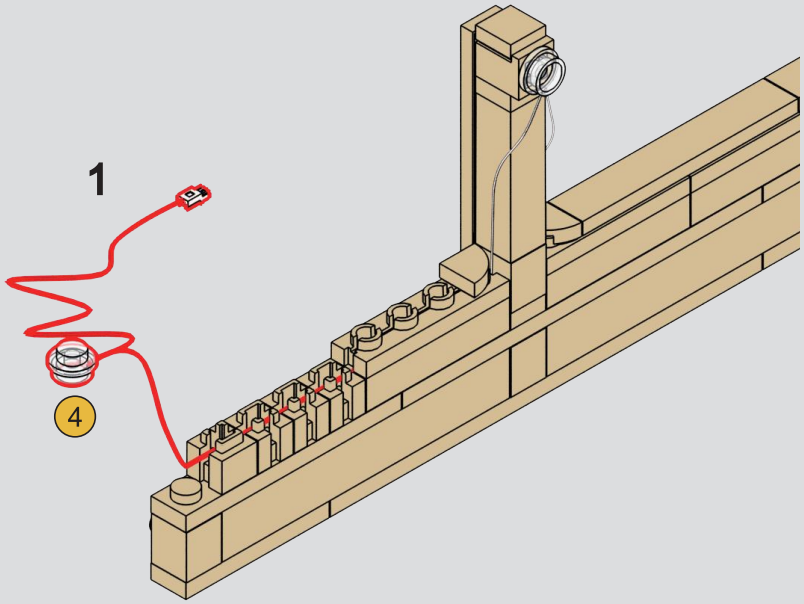

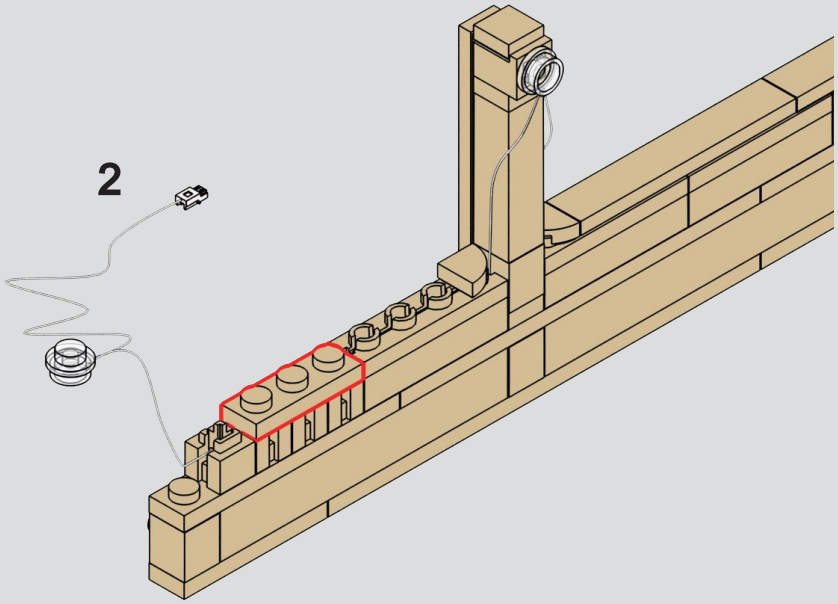

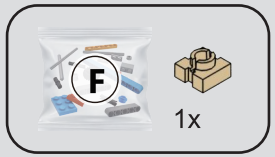

292

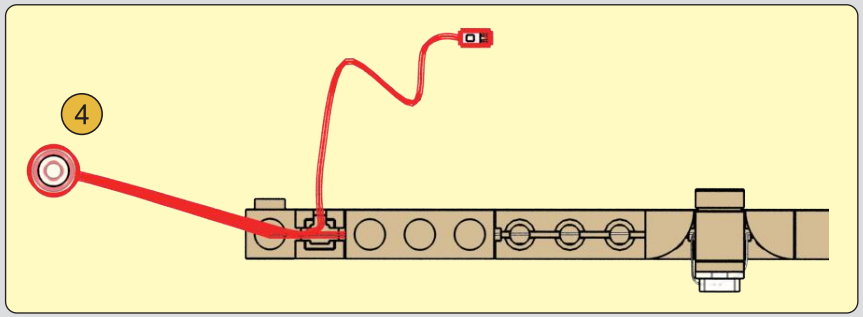

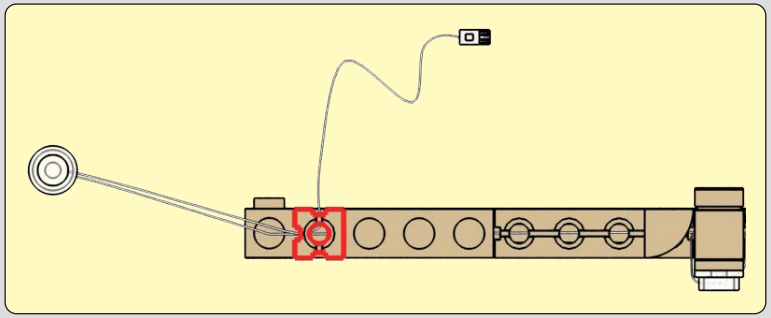

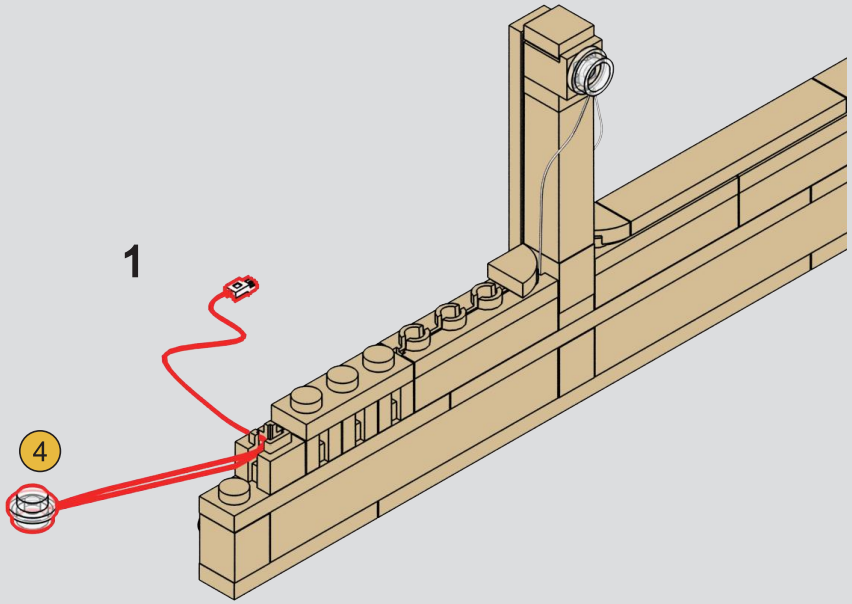

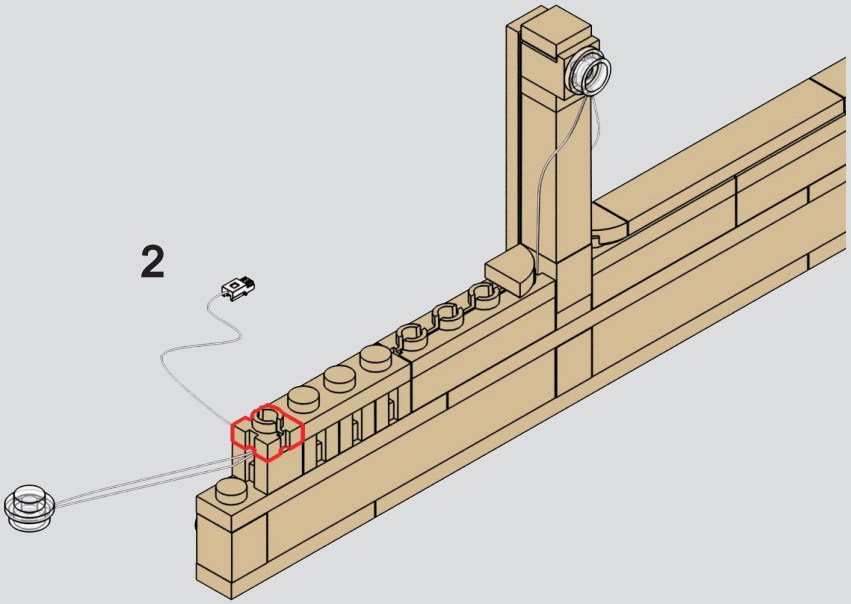

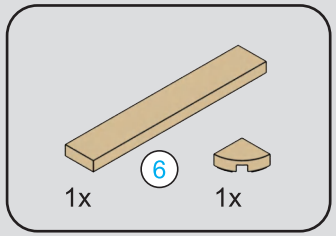

293

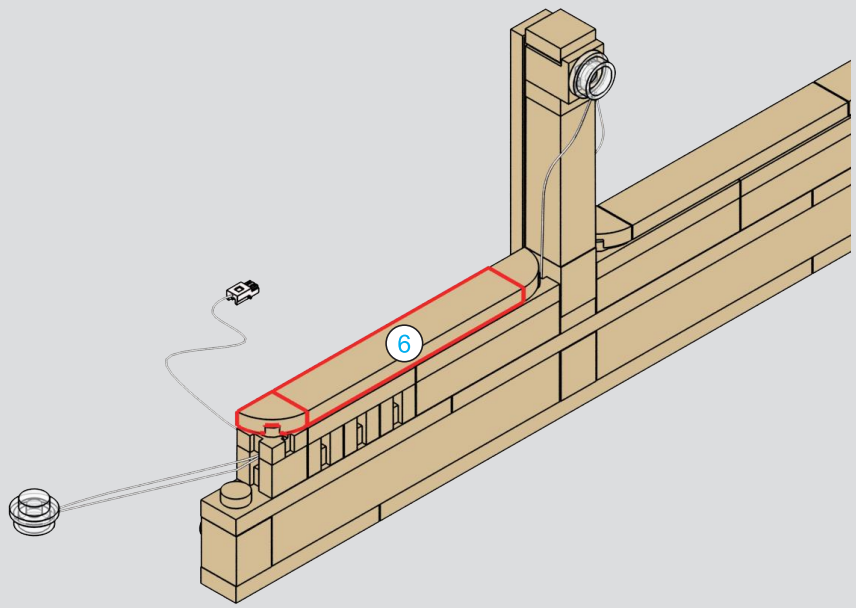

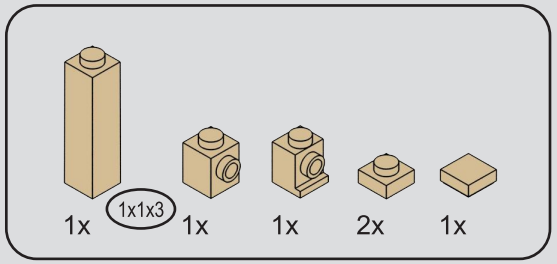

294

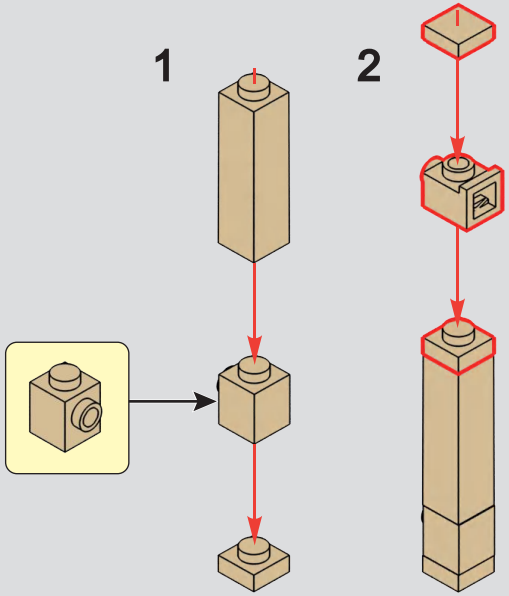

295

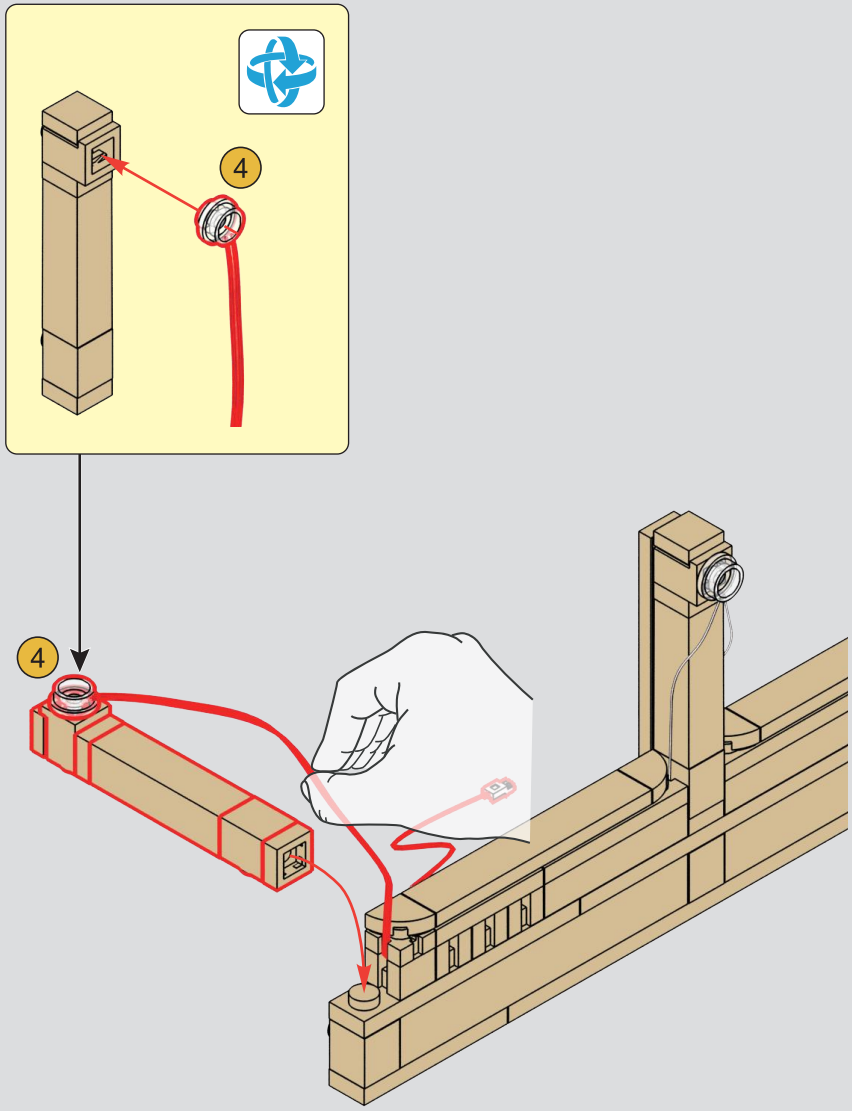

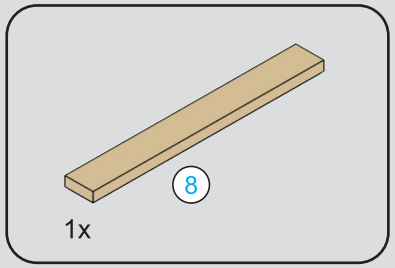

296

8 1:1

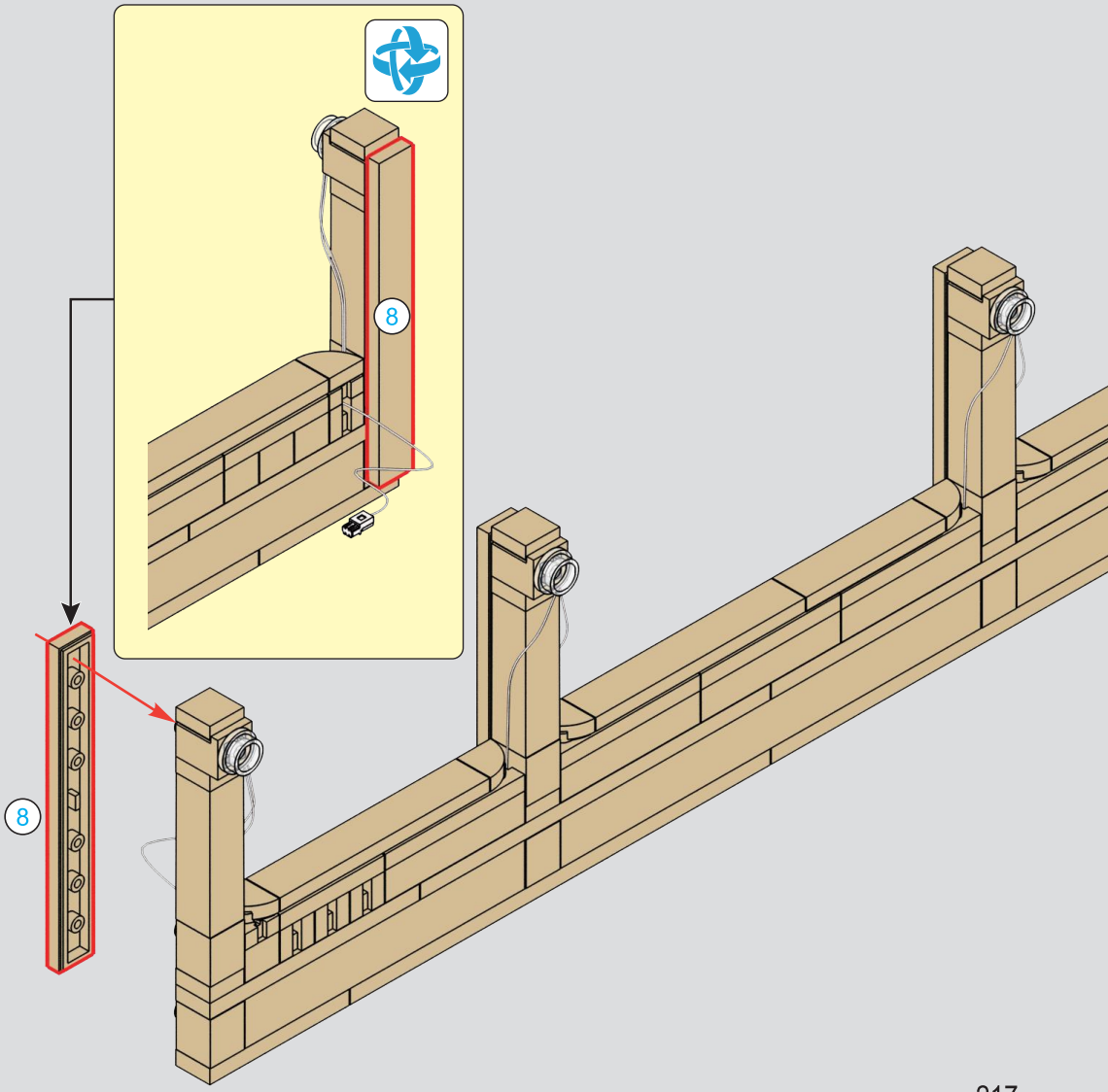

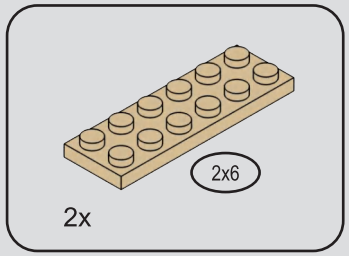

297

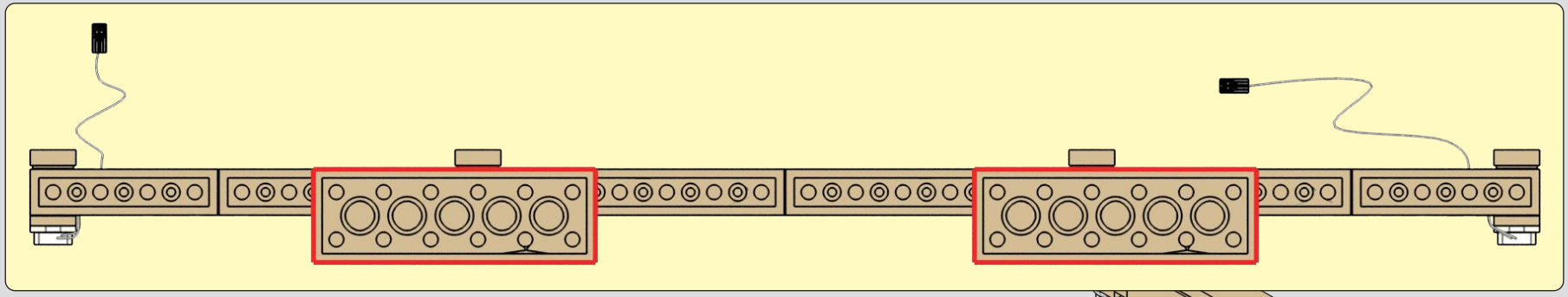

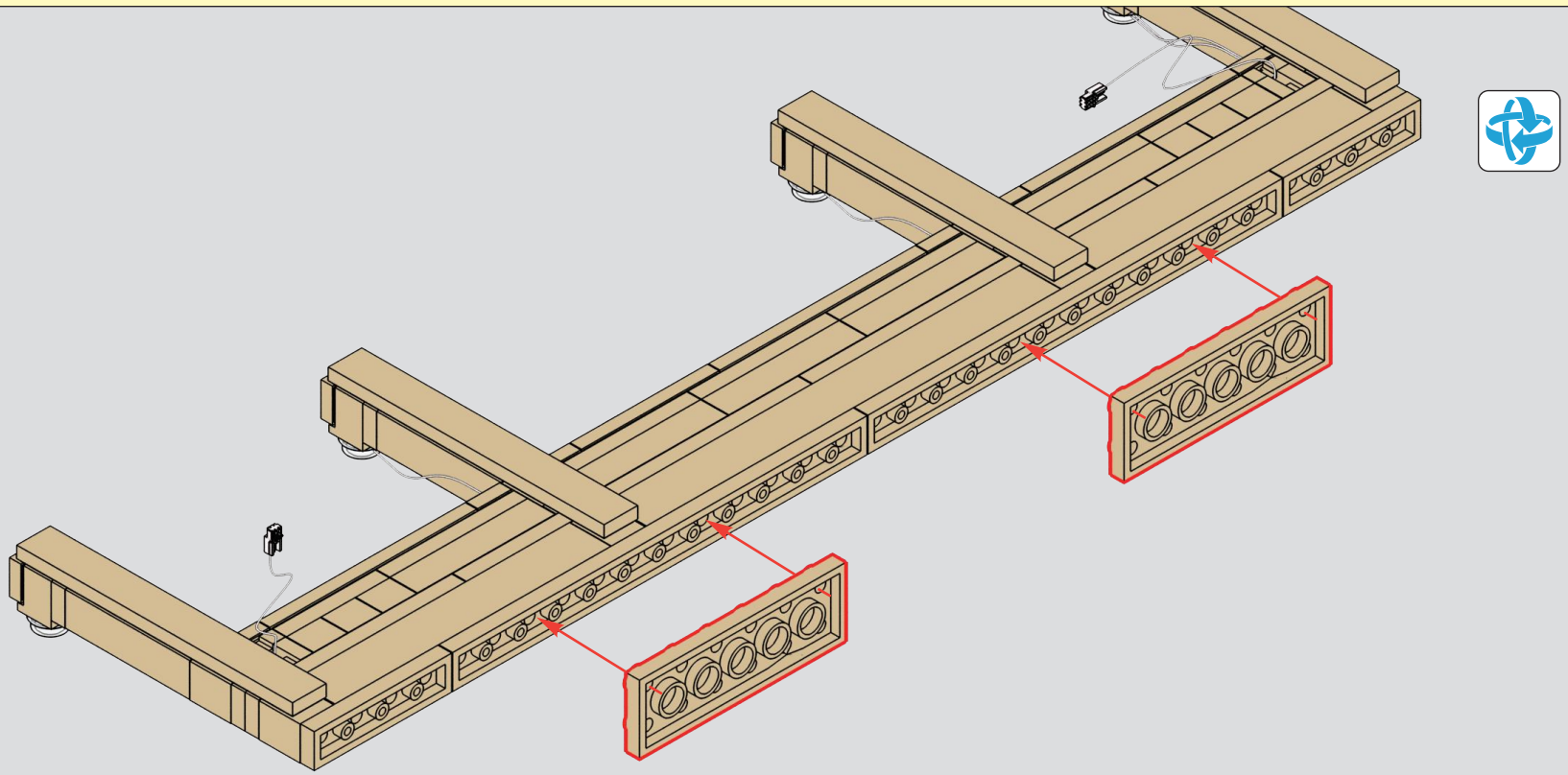

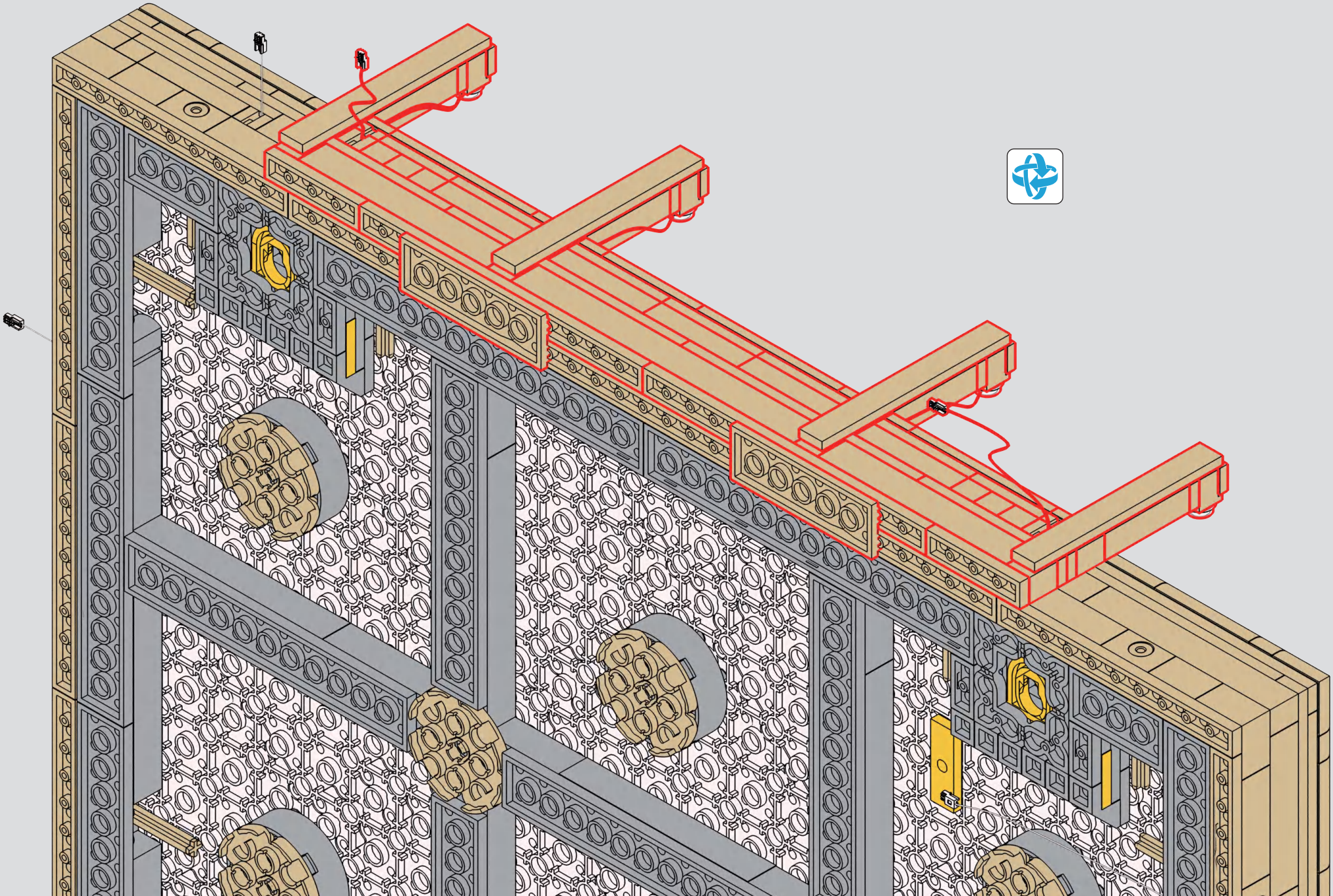

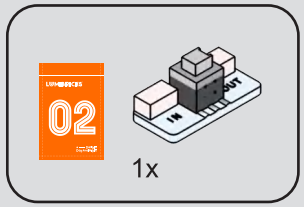

299

1

2

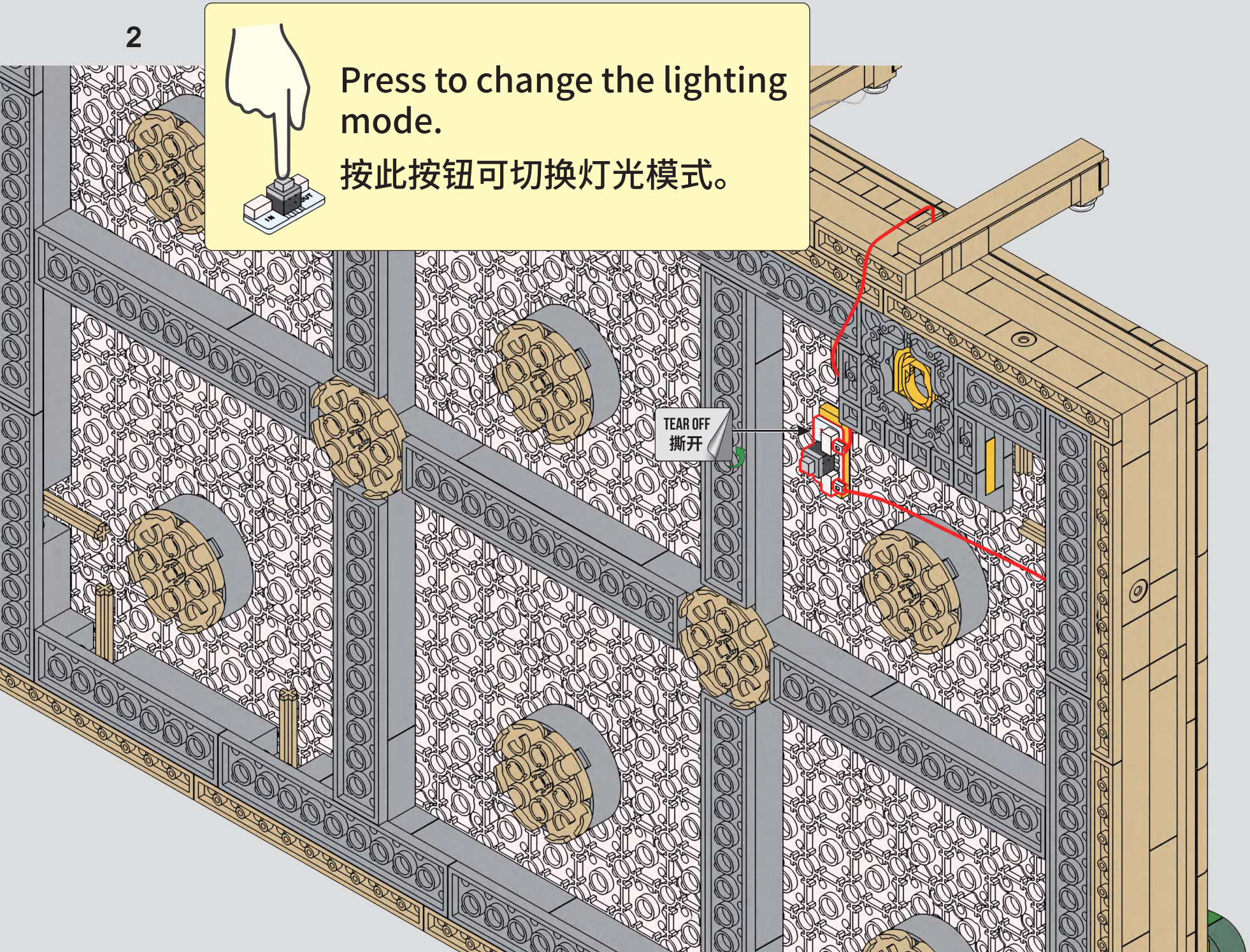

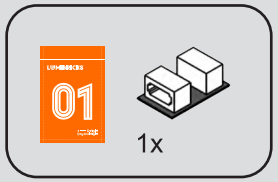

300

1

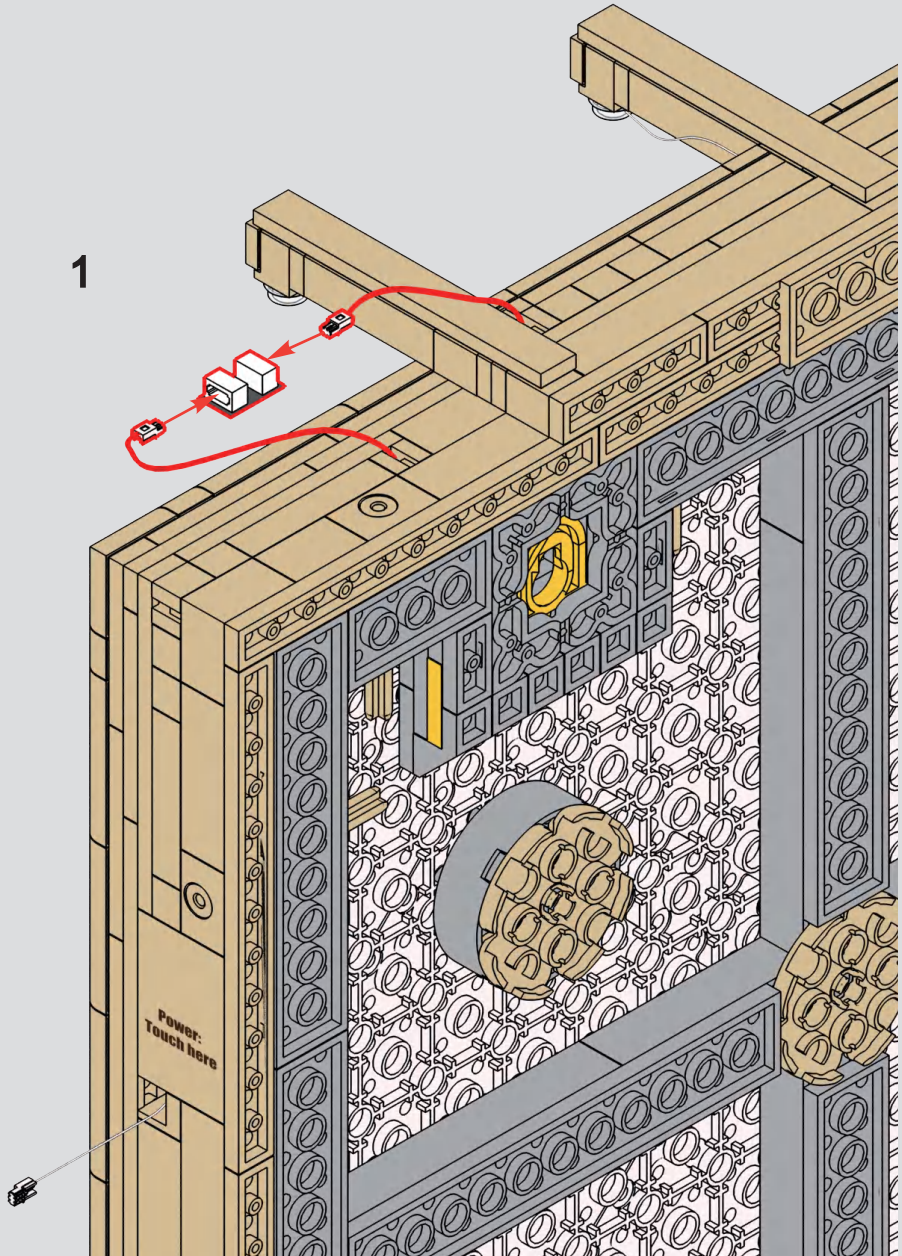

2

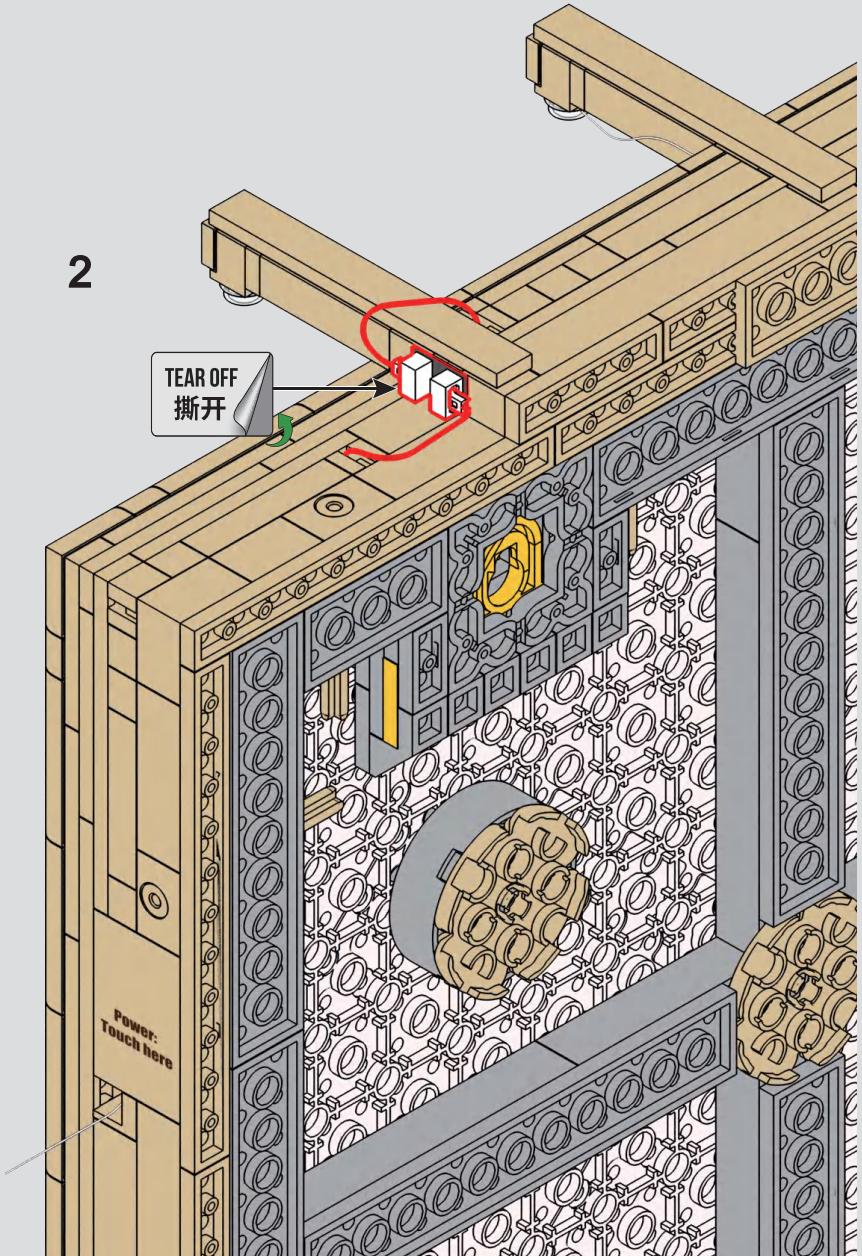

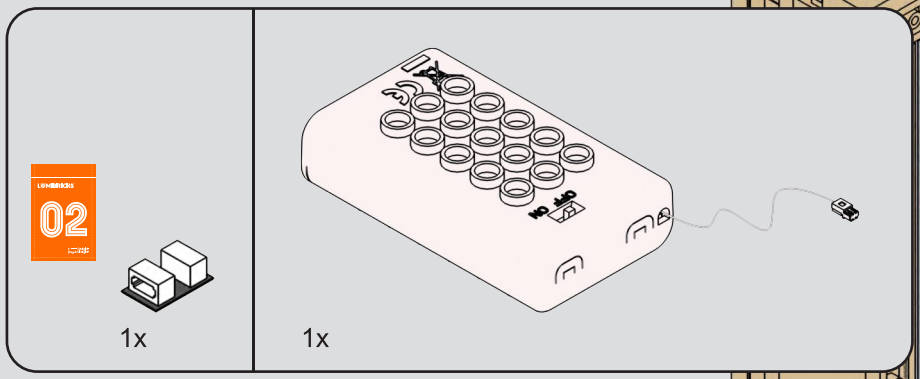
02
1x
1x

301

1

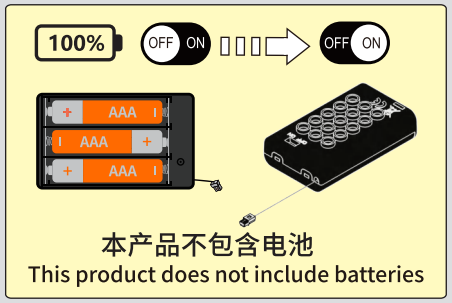
100%
OFF ON
OFF ON
AAA
AAA
AAA
本产品不包含电池
This product does not include batteries

2

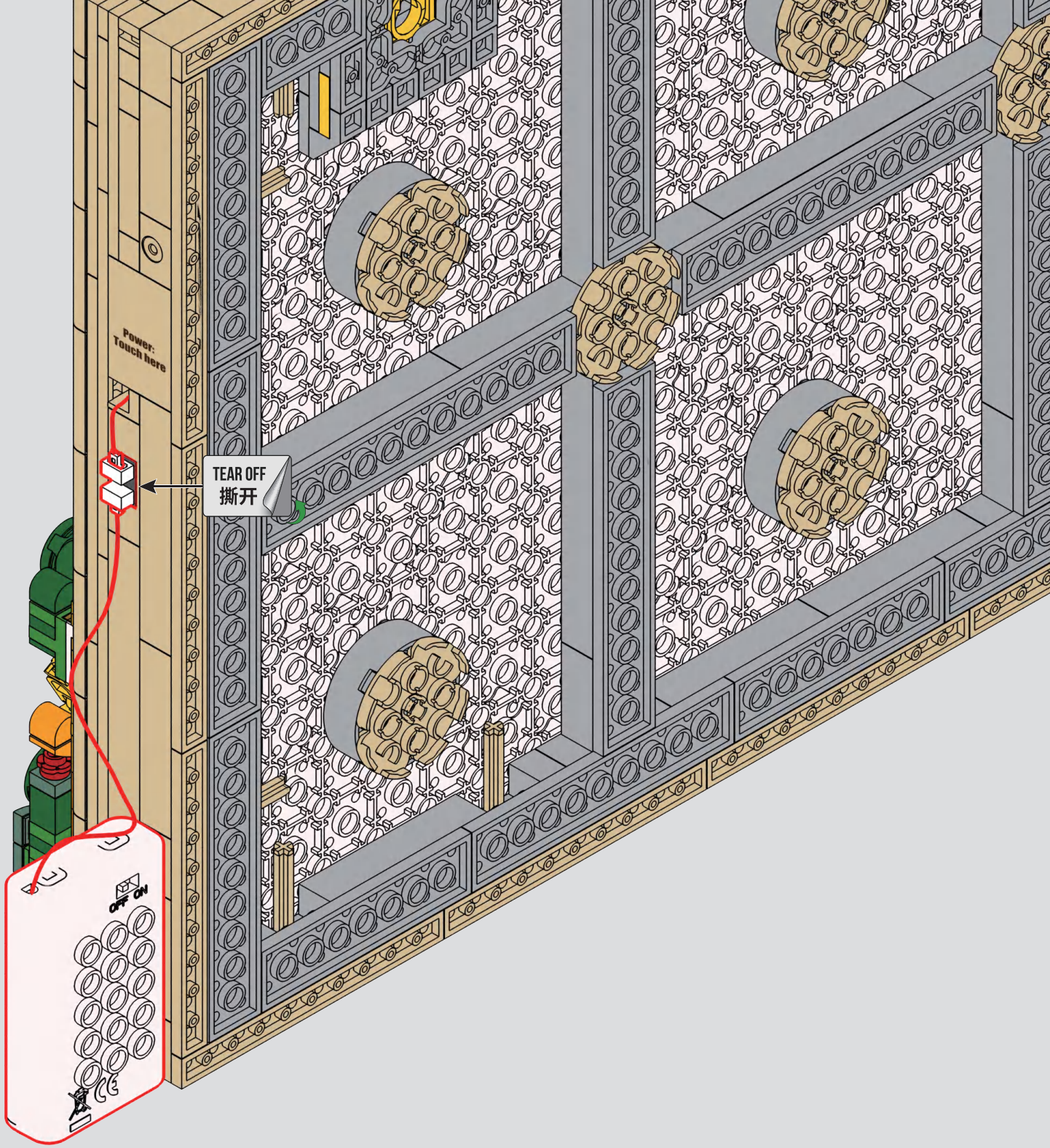

302

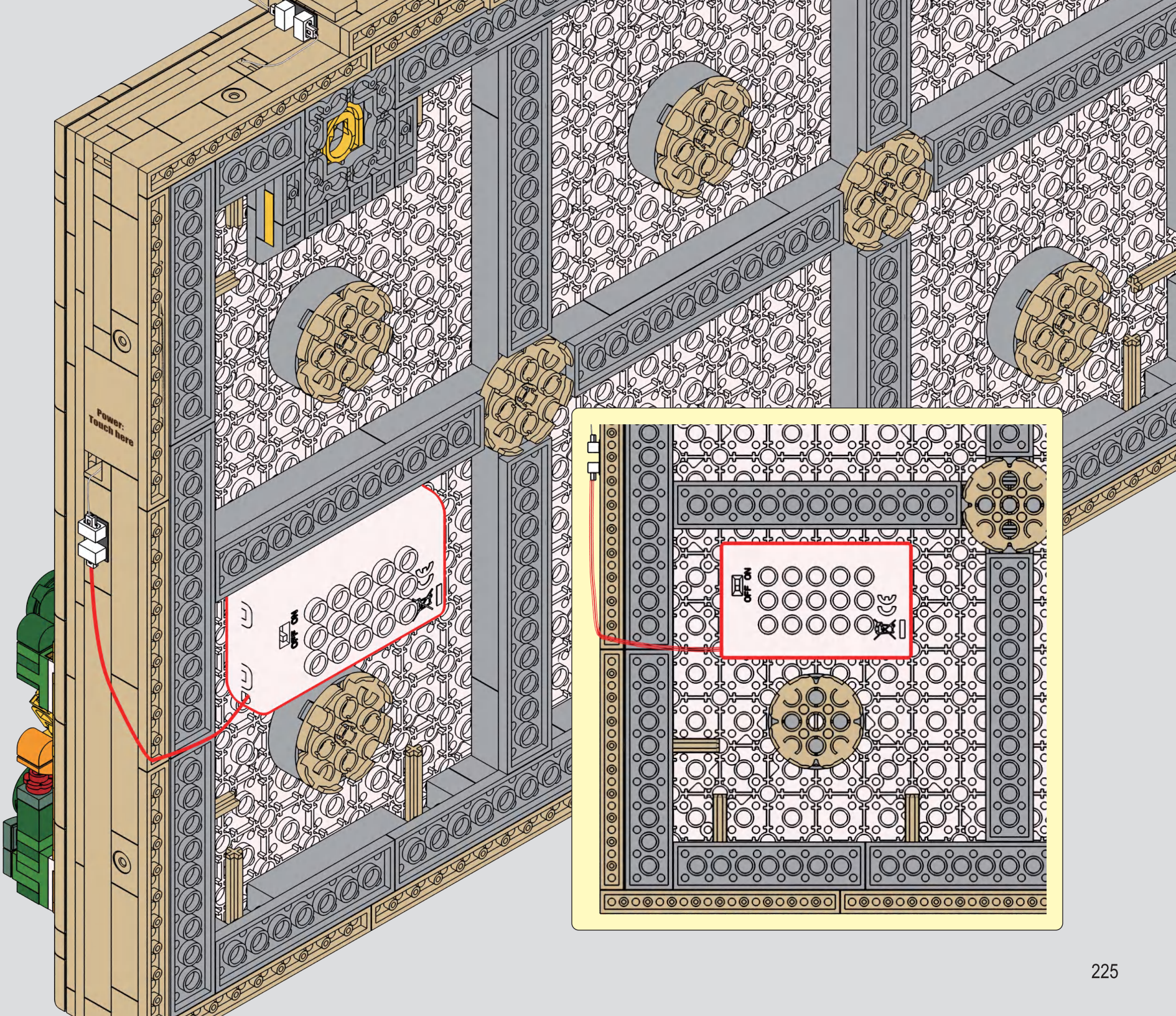

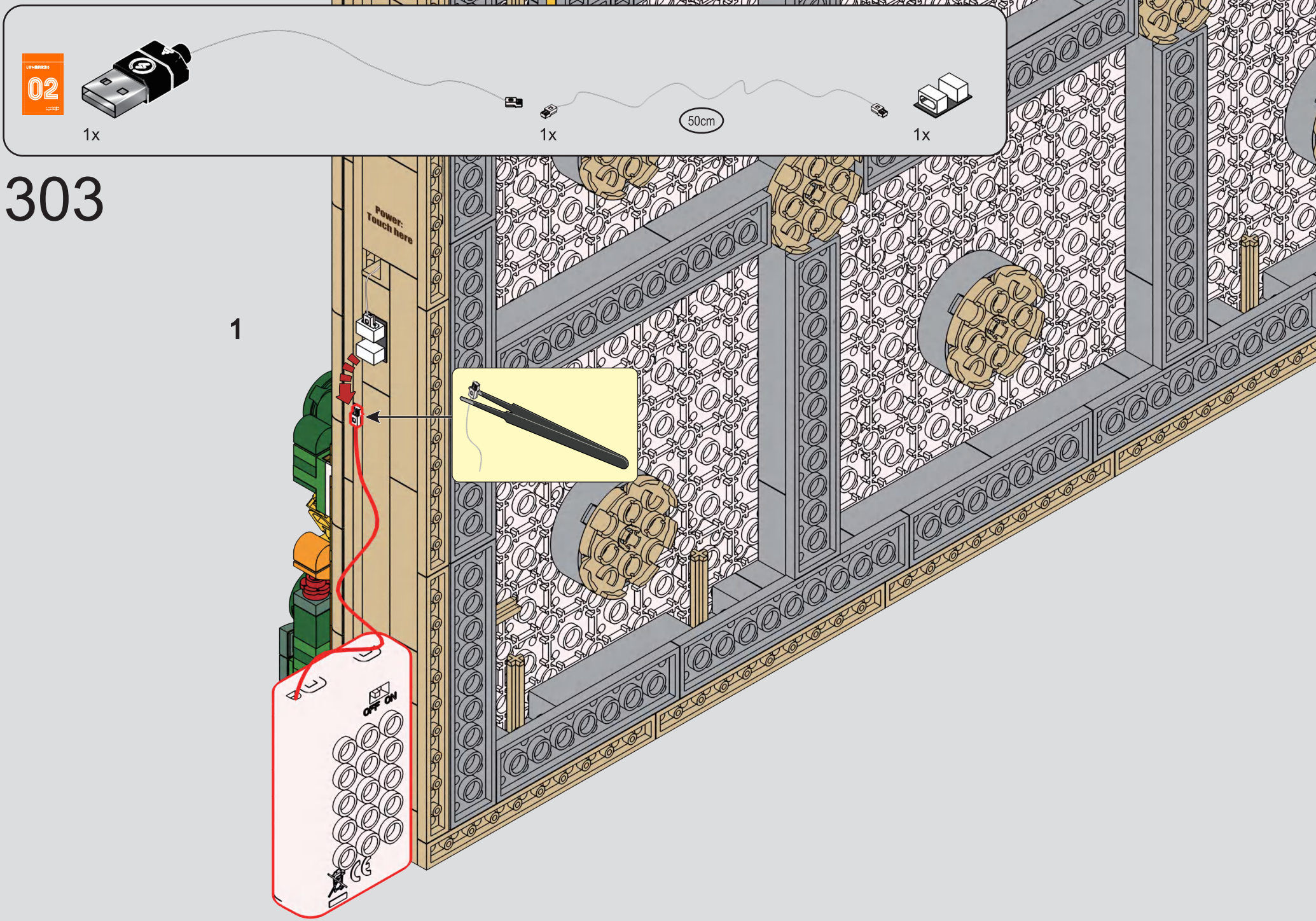
02
1x
1x
50cm
1x
303
1
Power:
Touch here
OFF ON

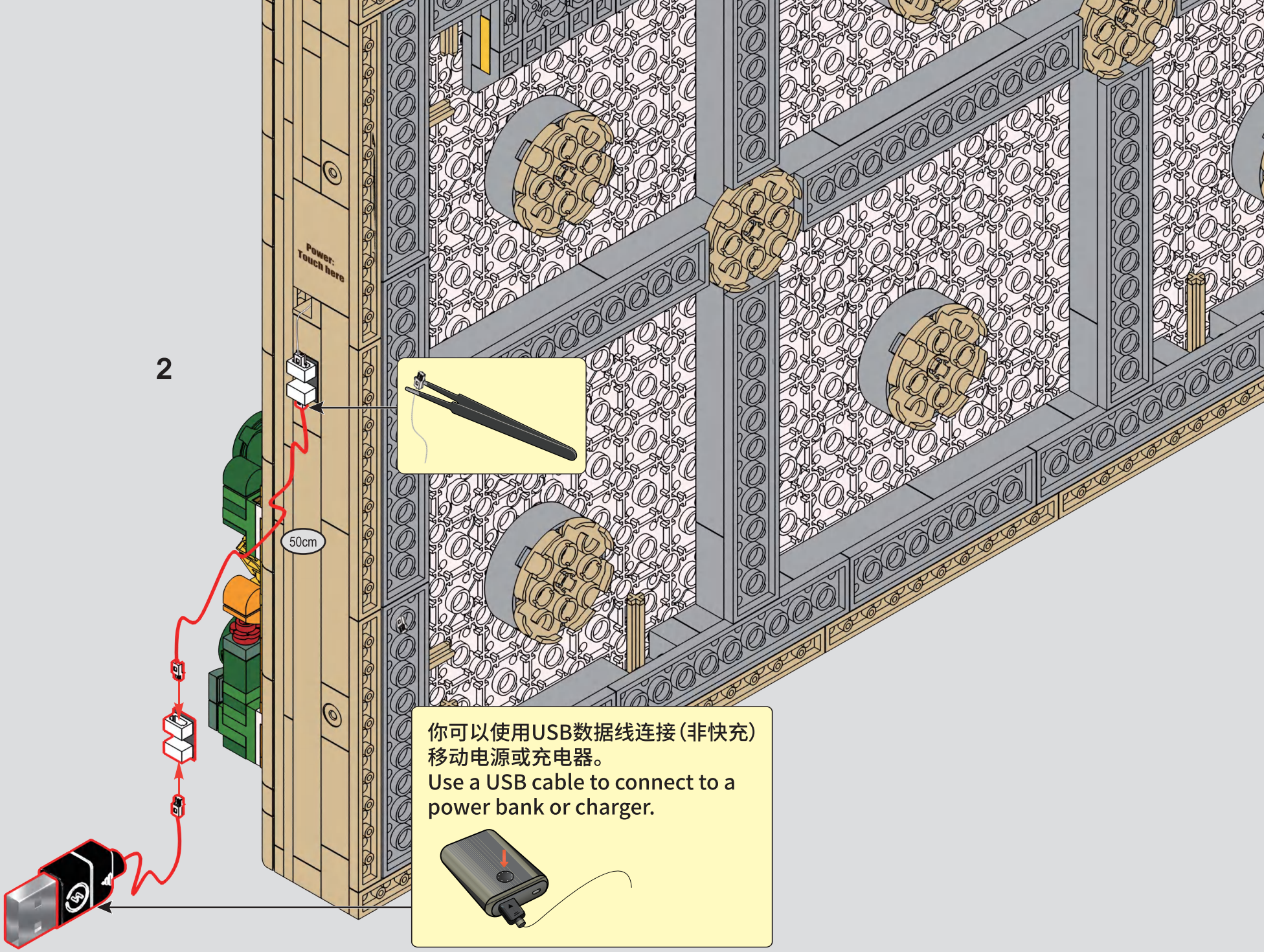
2
Power:
Touch here
50cm
你可以使用USB数据线连接(非快充)
移动电源或充电器。
Use a USB cable to connect to a
power bank or charger.

304

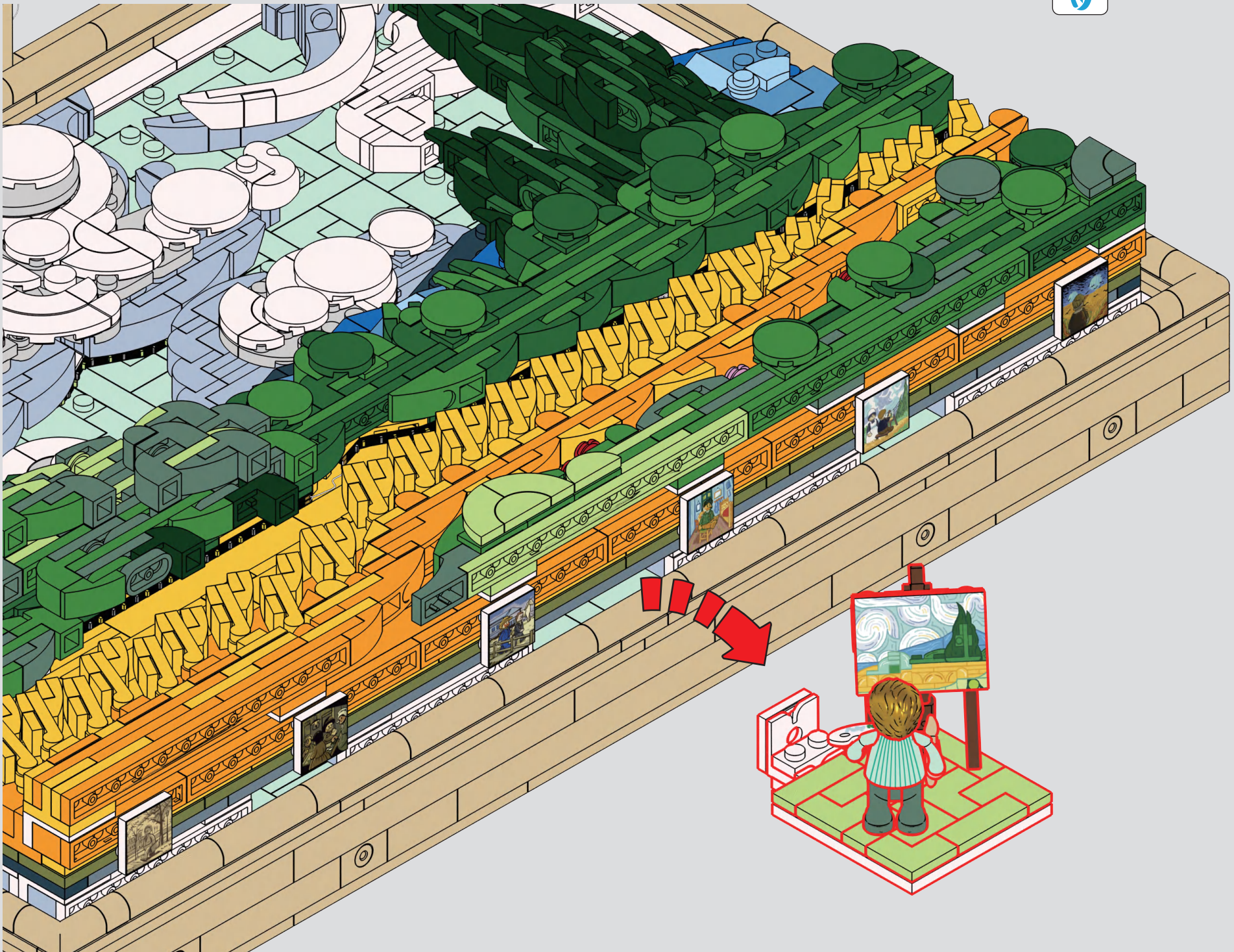

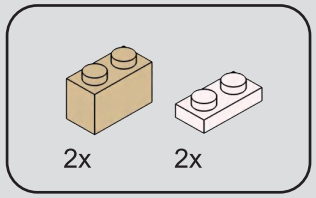

305

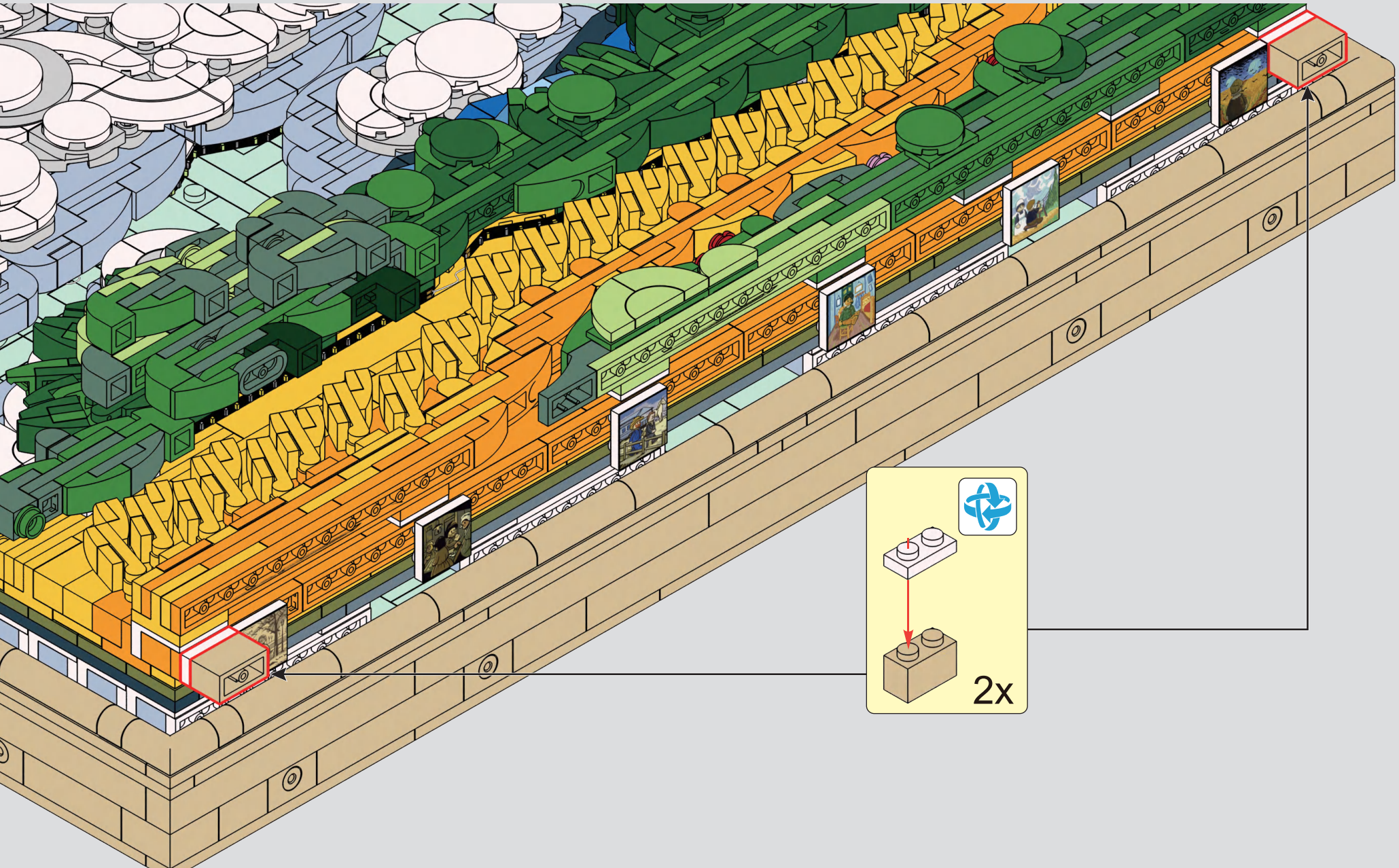

Method A

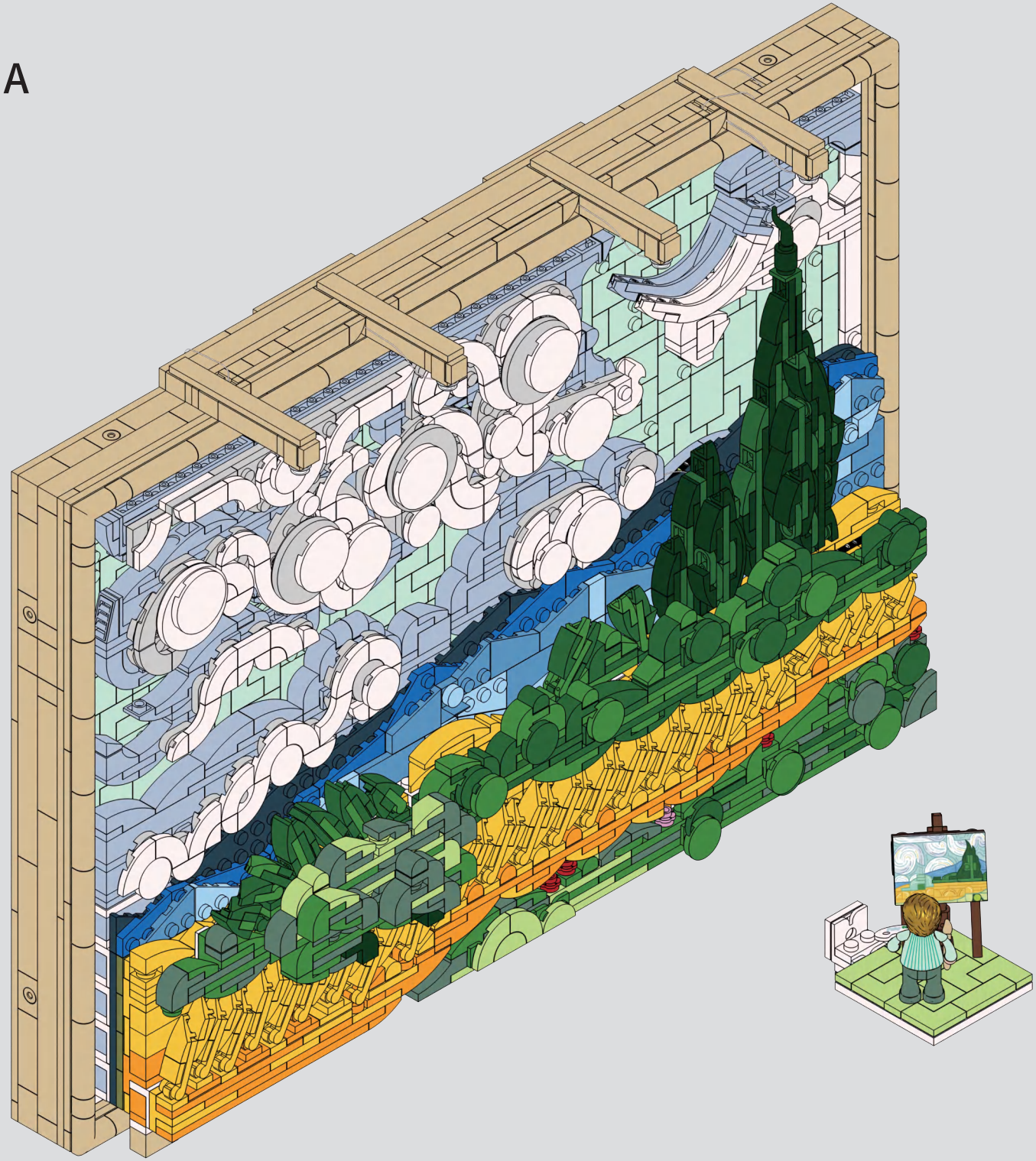

Method B

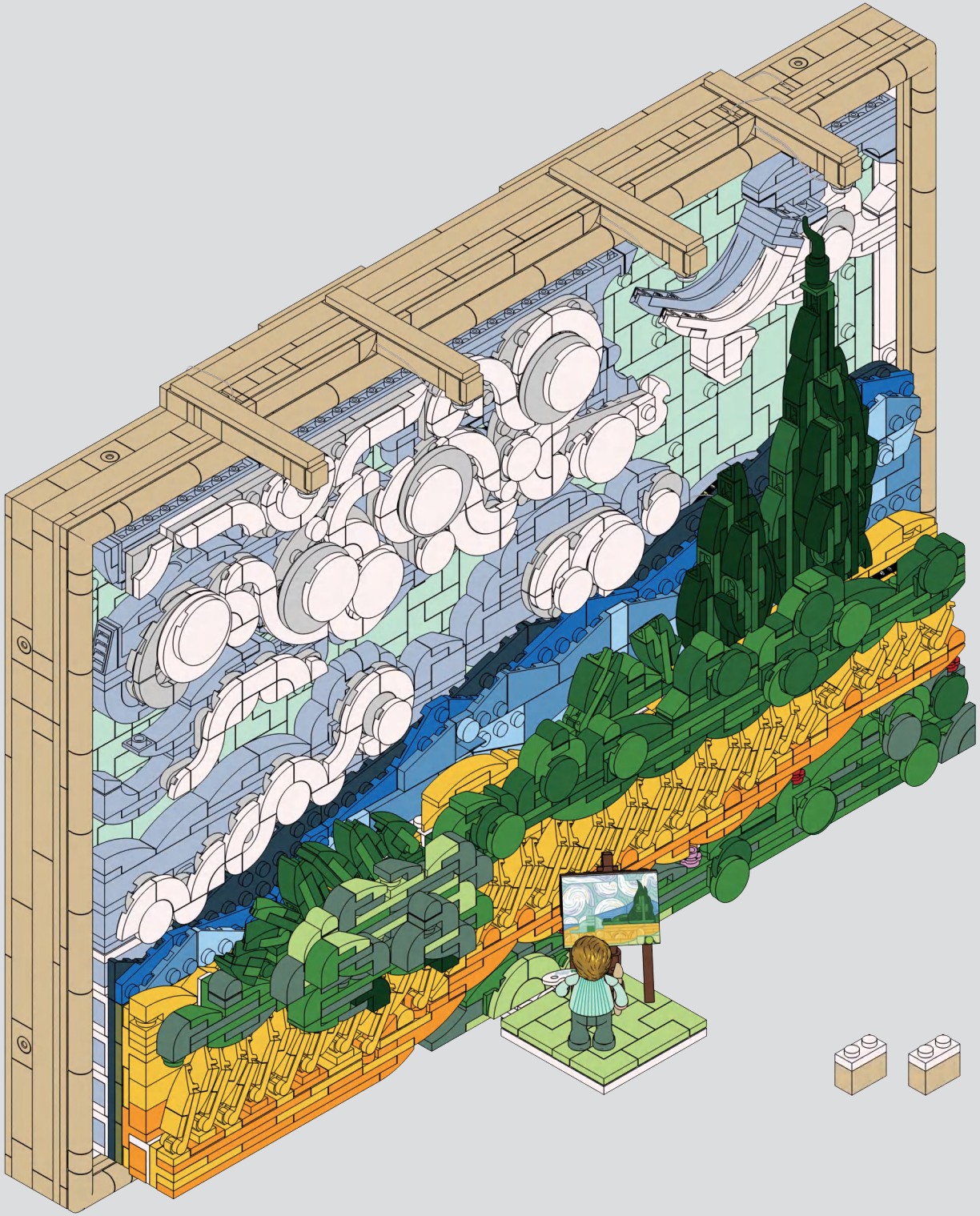

Method C

1

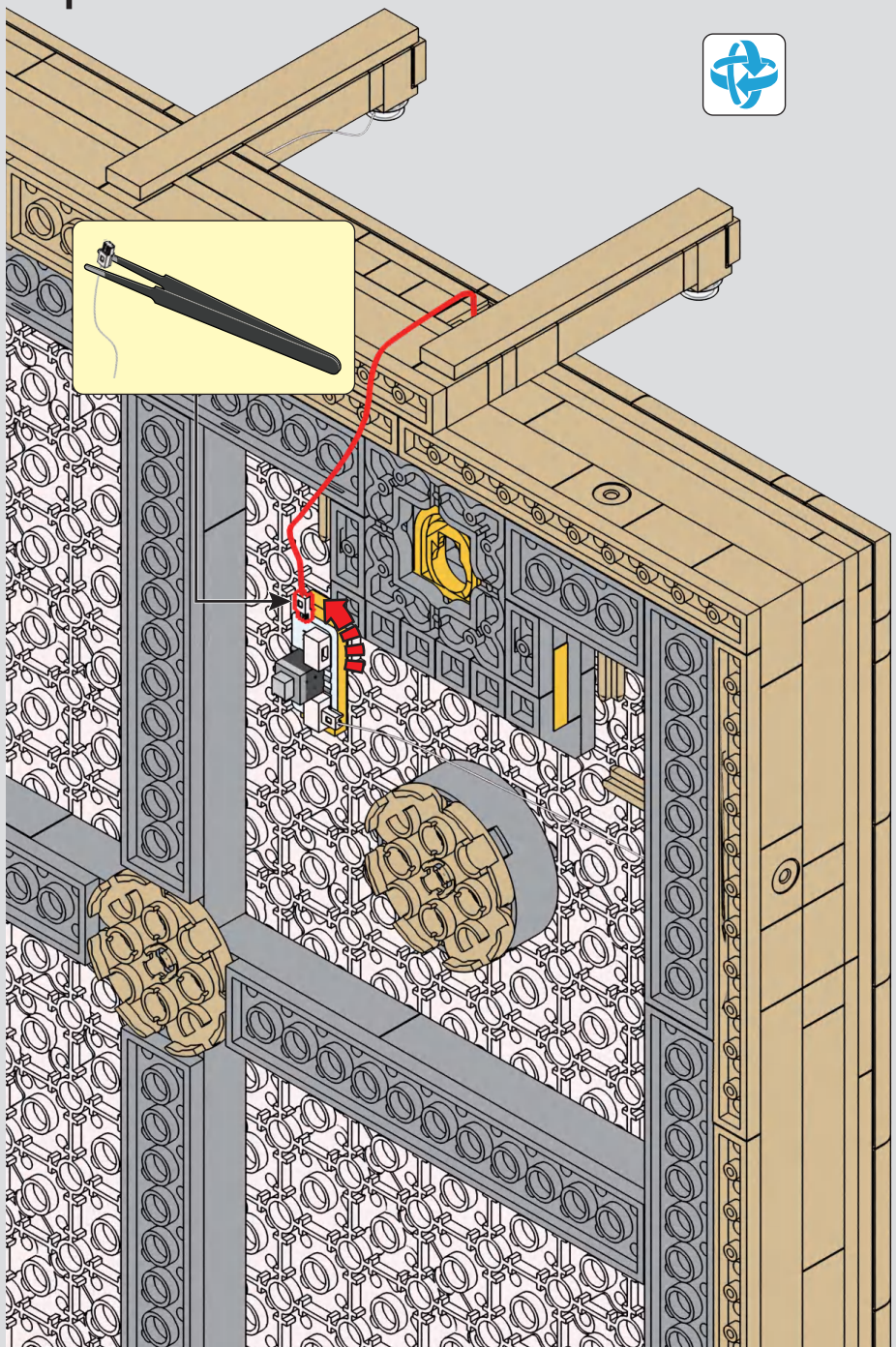

2

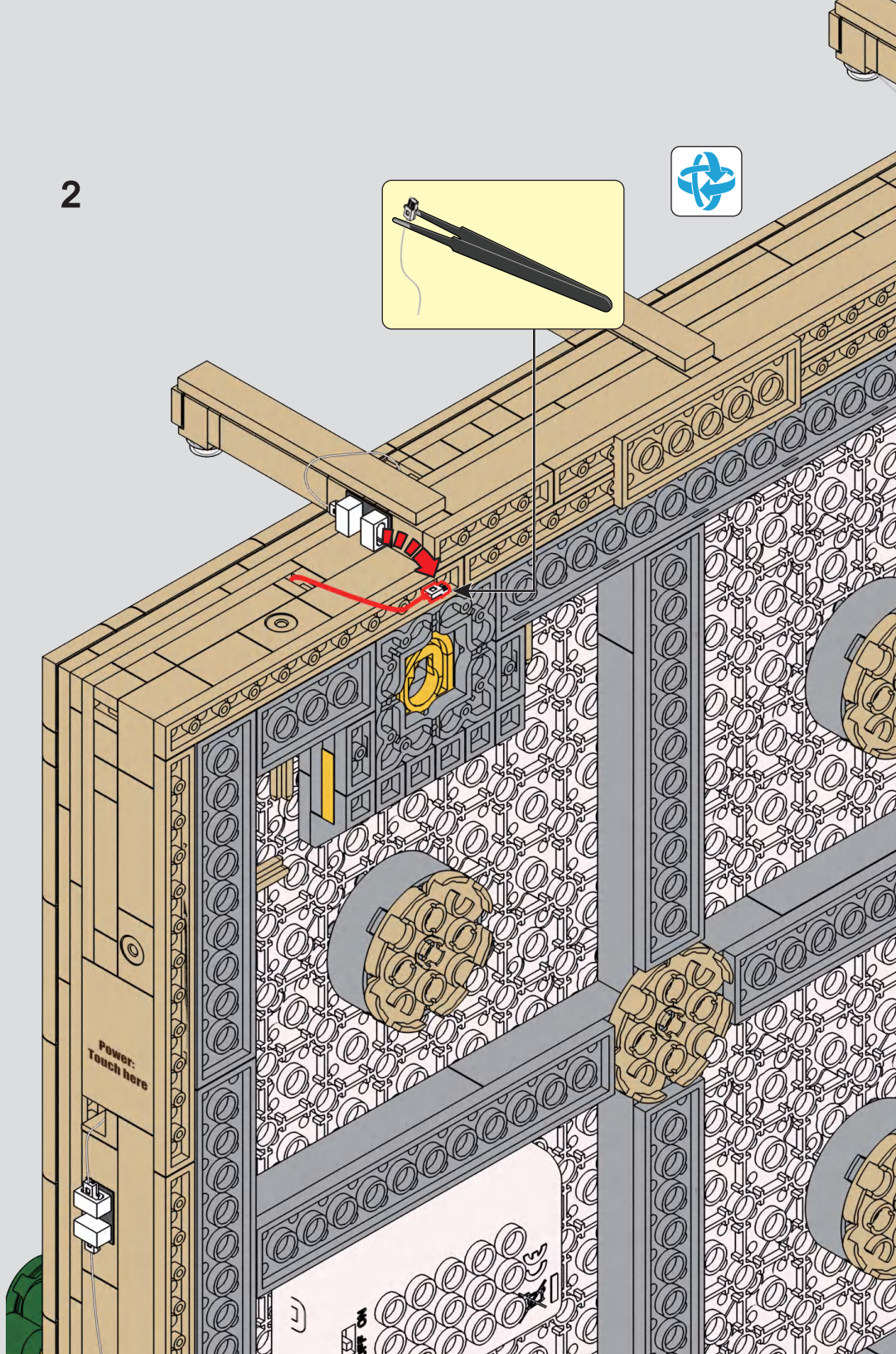

3

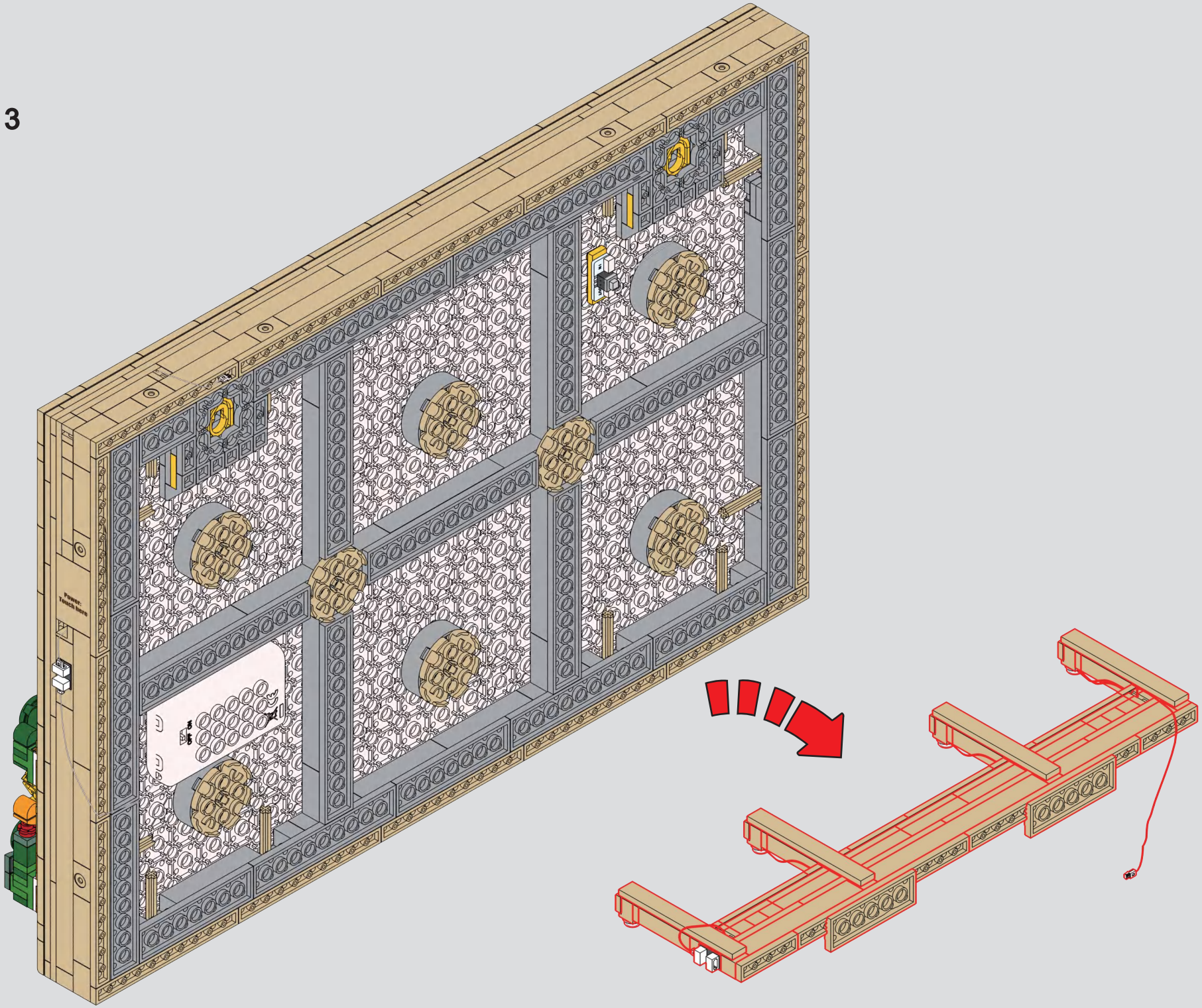

4

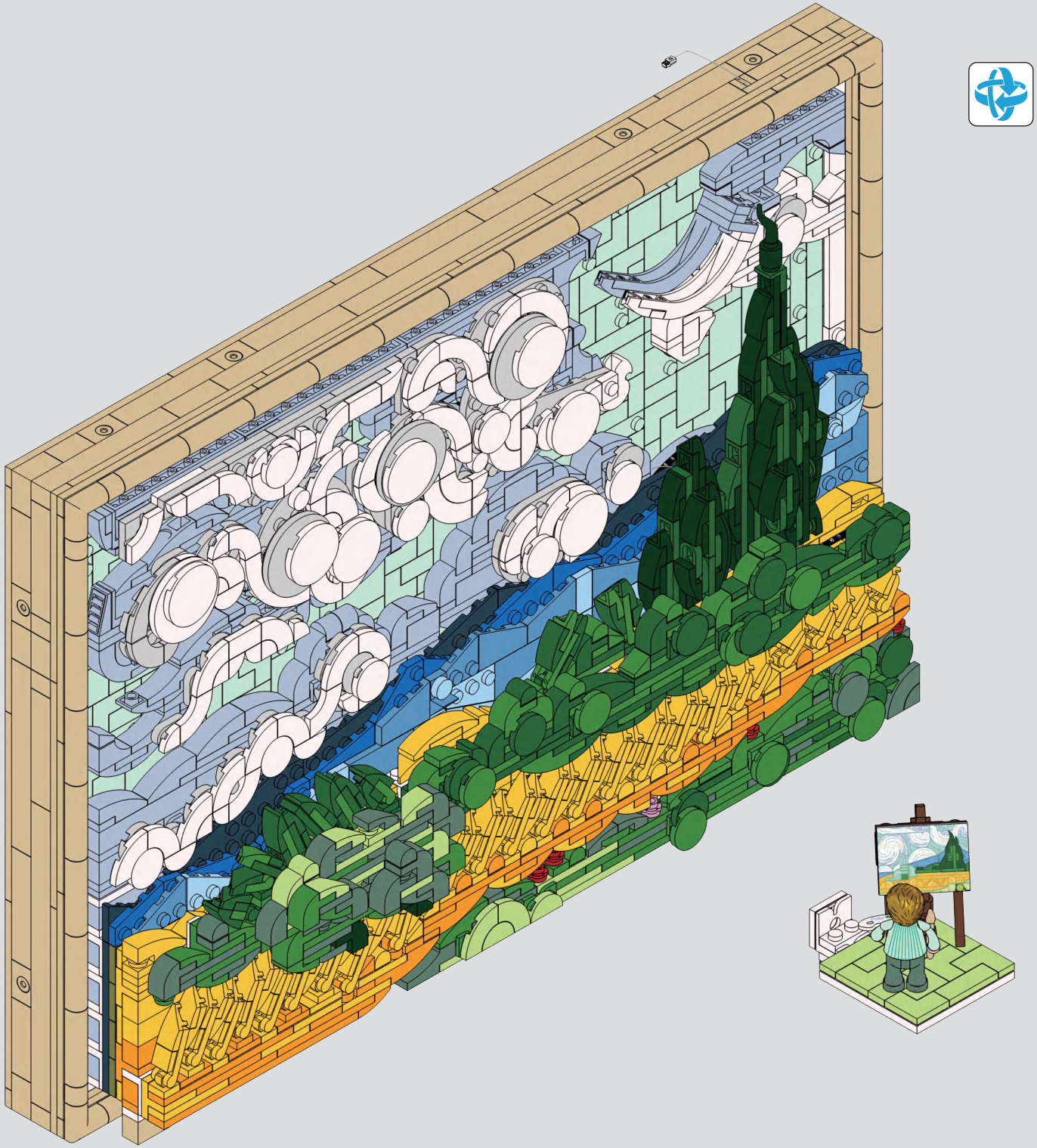

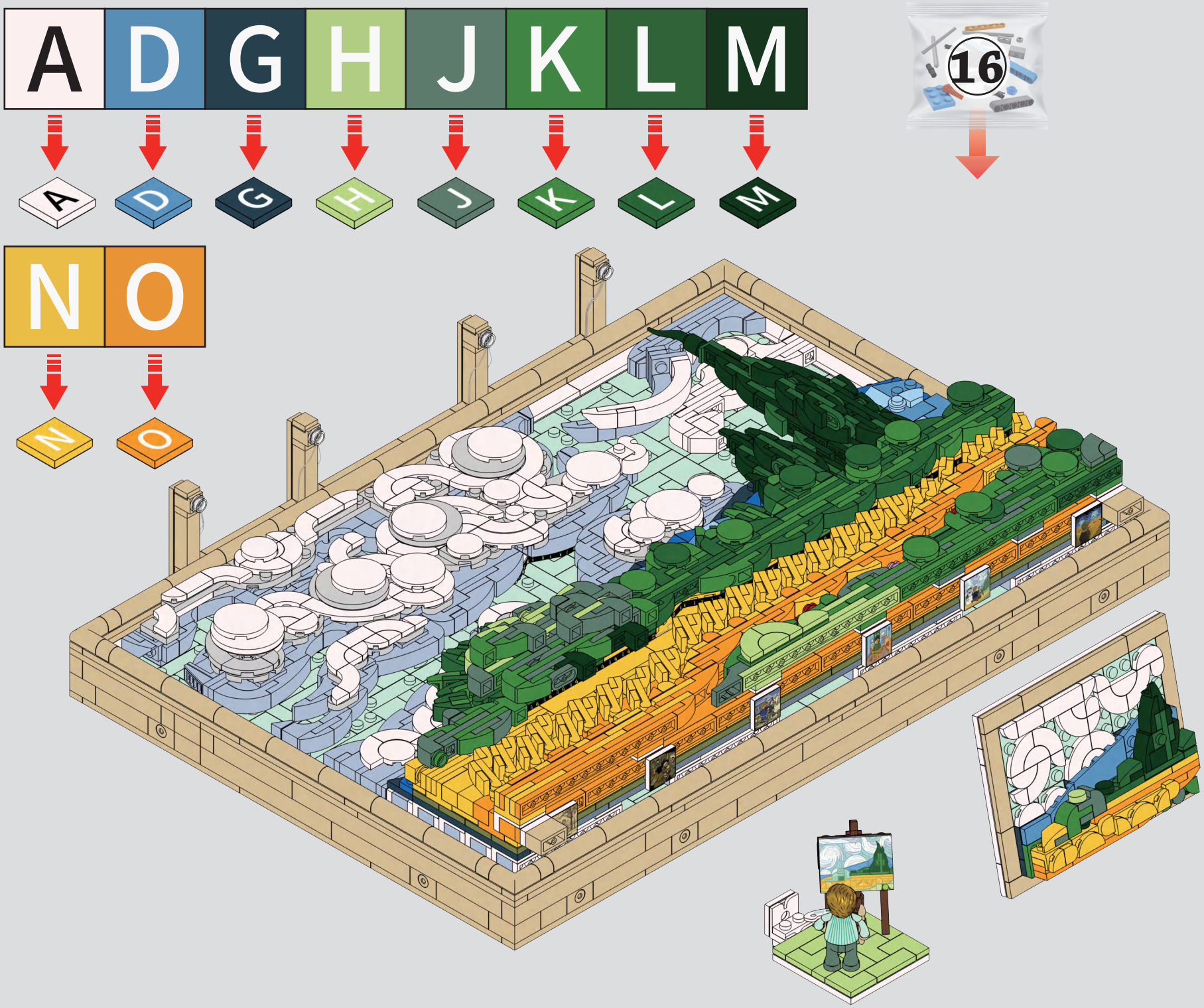
A D G H J K L M
16
N O

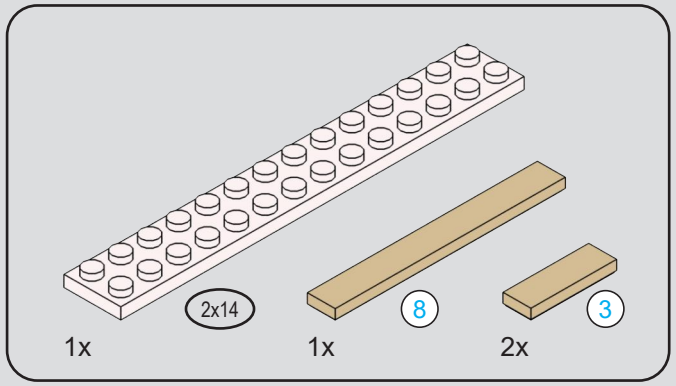

306

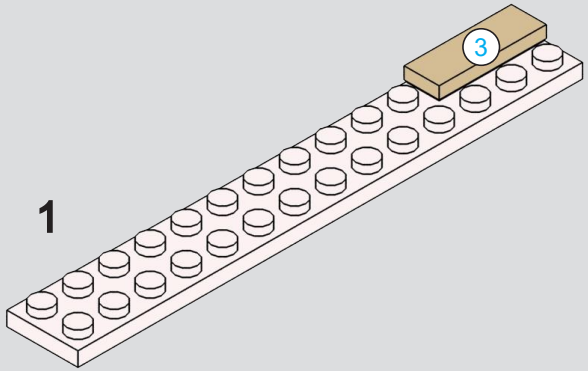

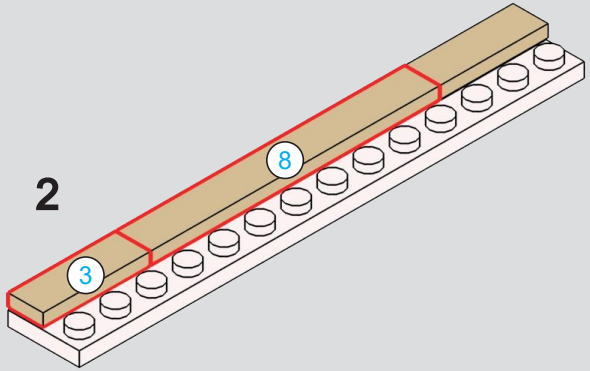

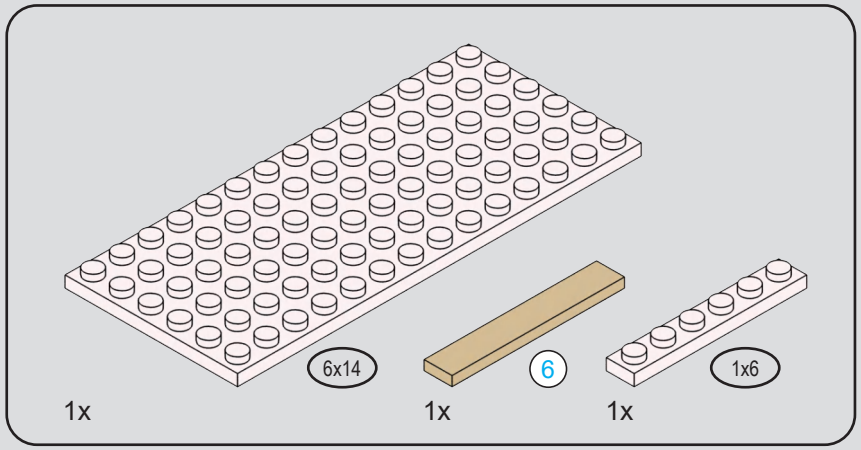

307

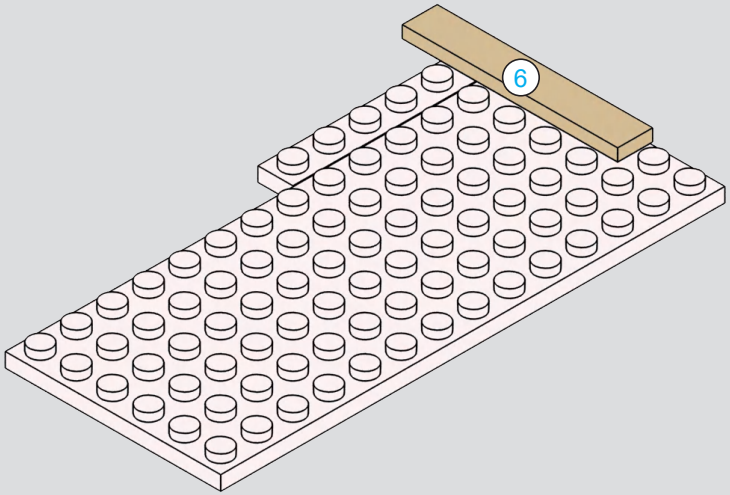

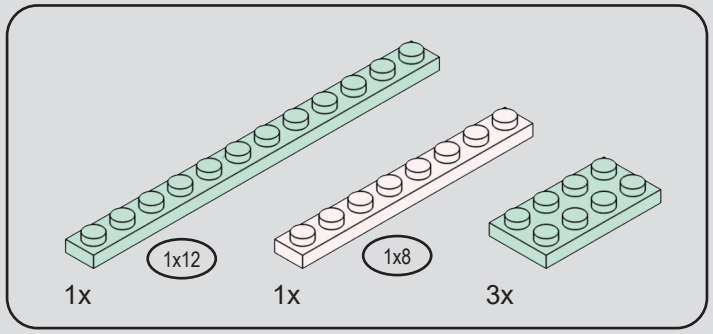

308

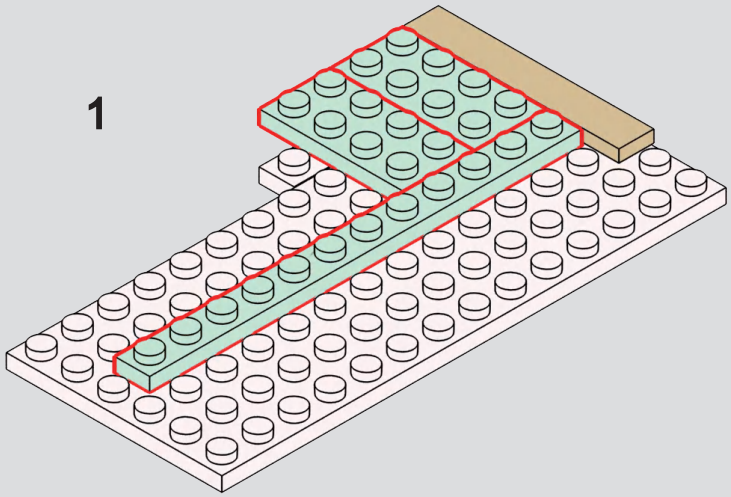

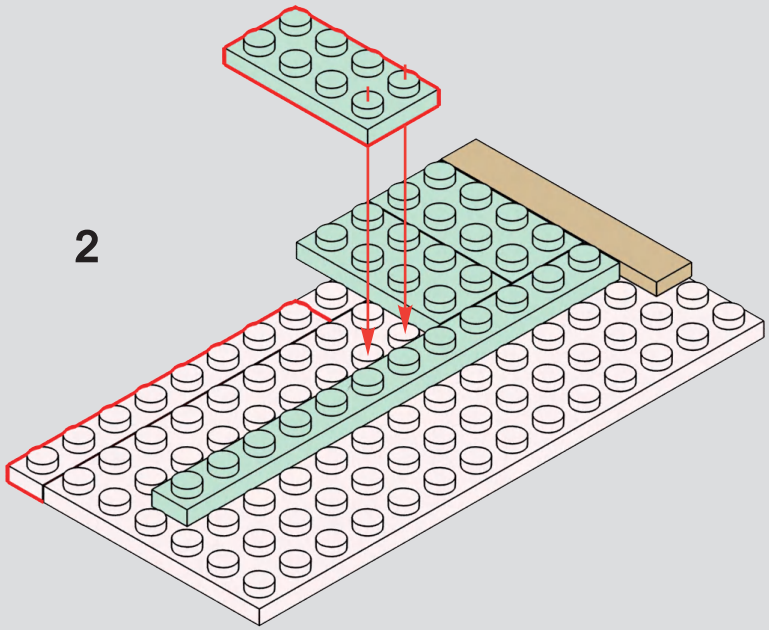

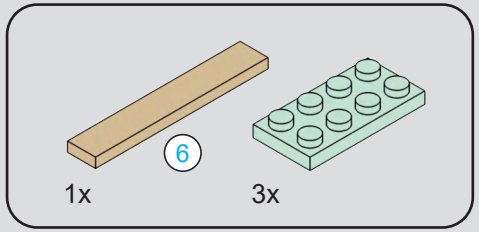

309

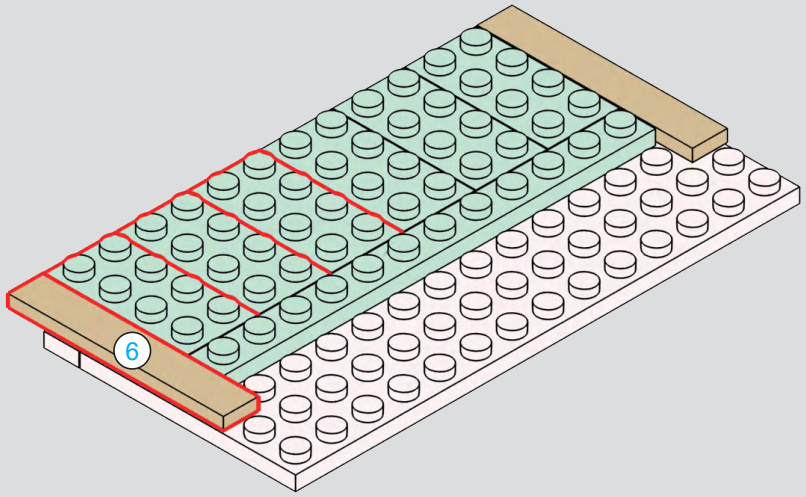

310

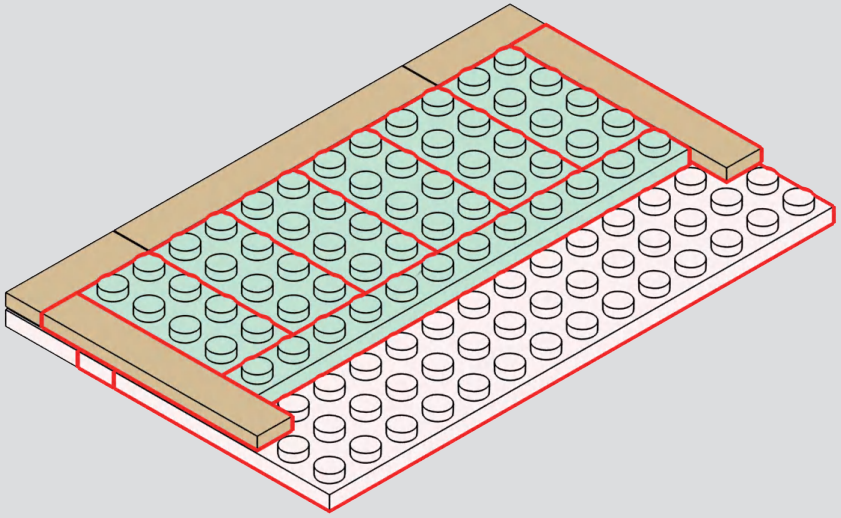

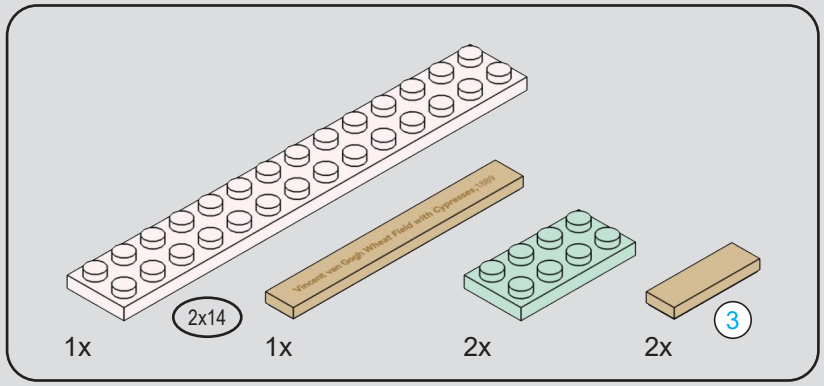

311

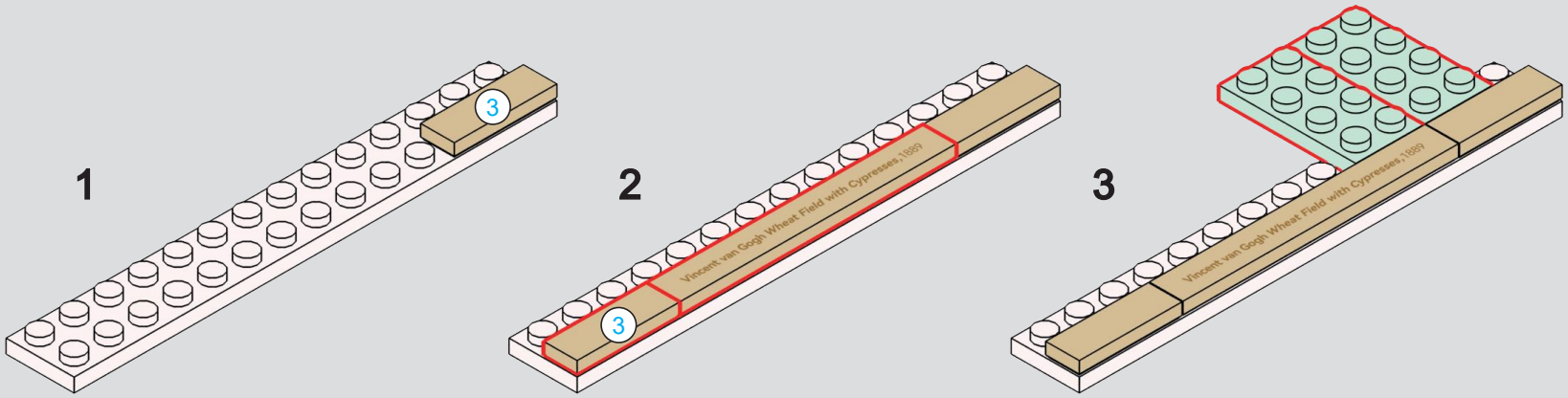

312

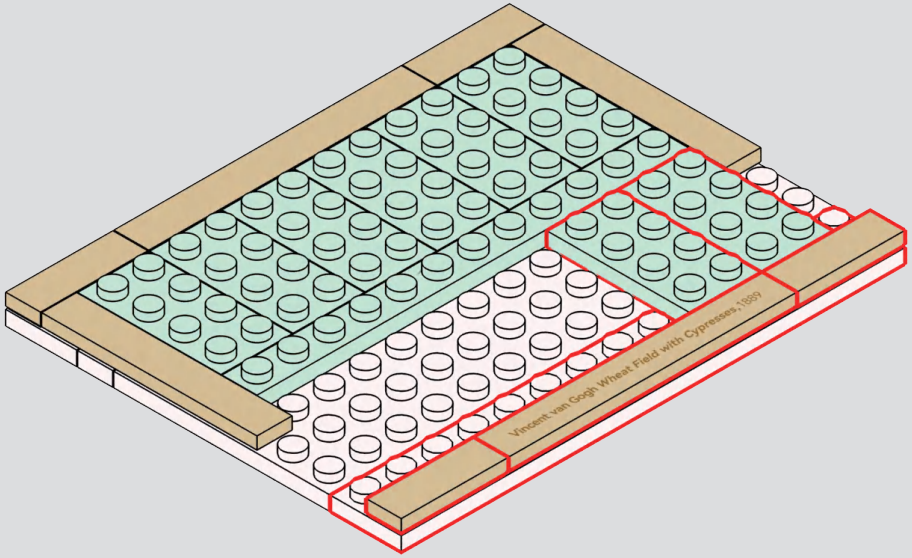
Vincent van Gogh Wheat Field with Cypresses, 1889

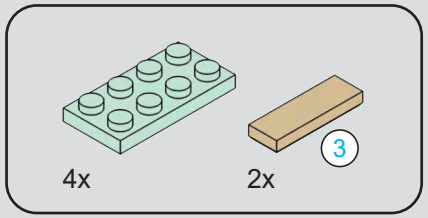
4x
2x
3

313

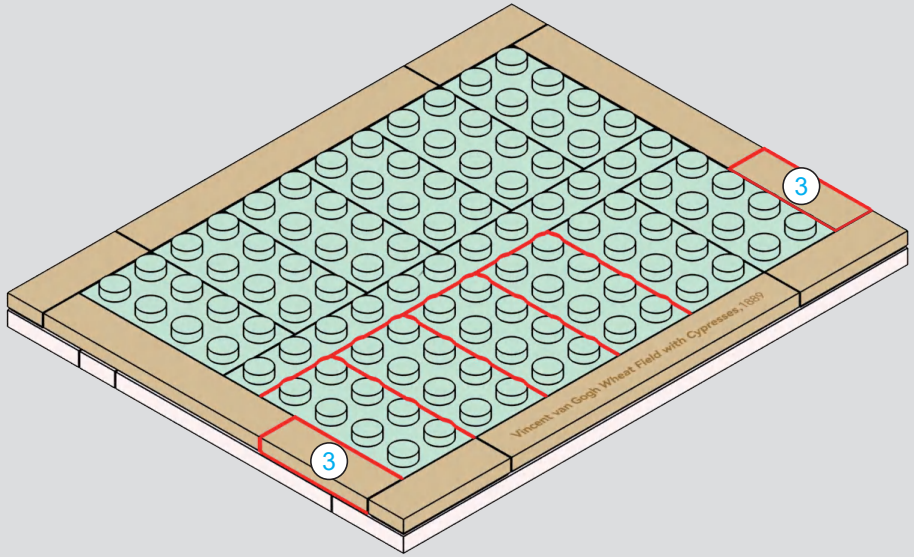
3
3
Vincent van Gogh Wheat Field with Cypresses, 1889

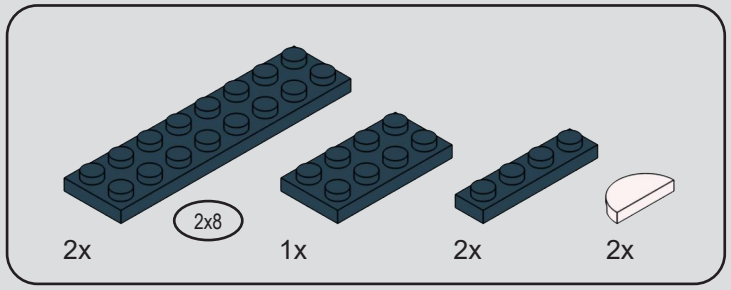
2x8
2x
1x
2x
2x

314

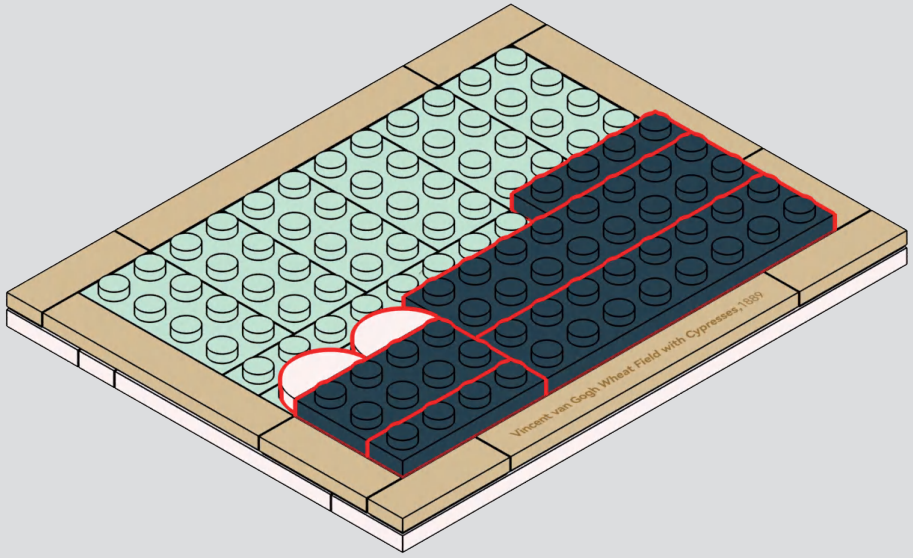
Vincent van Gogh Wheat Field with Cypresses, 1889

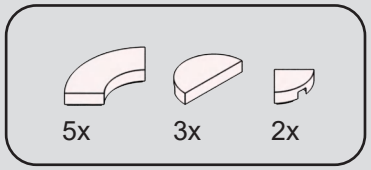
5x
3x
2x

315

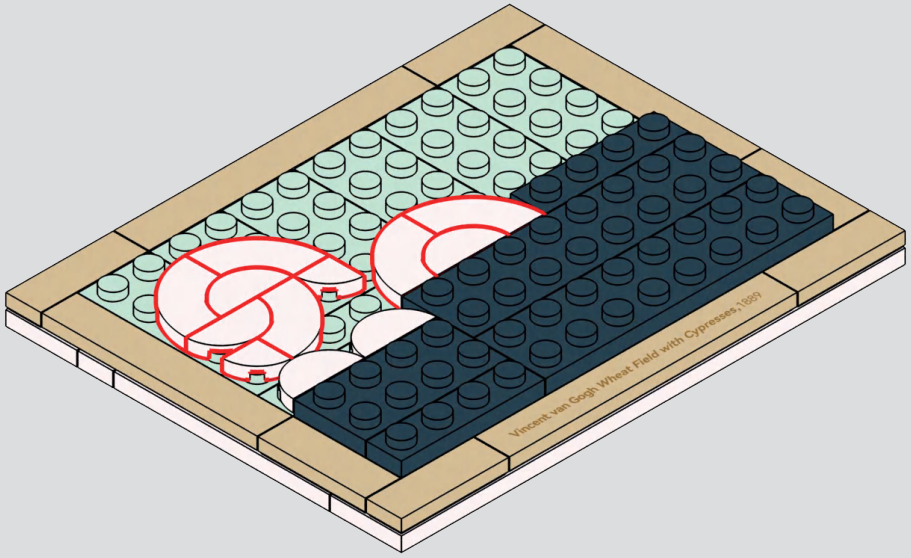
Vincent van Gogh Wheat Field with Cypresses, 1889

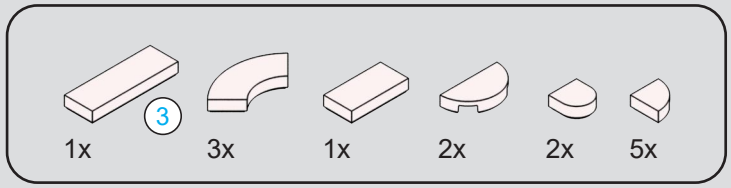
3
1x
3x
1x
2x
2x
5x

316

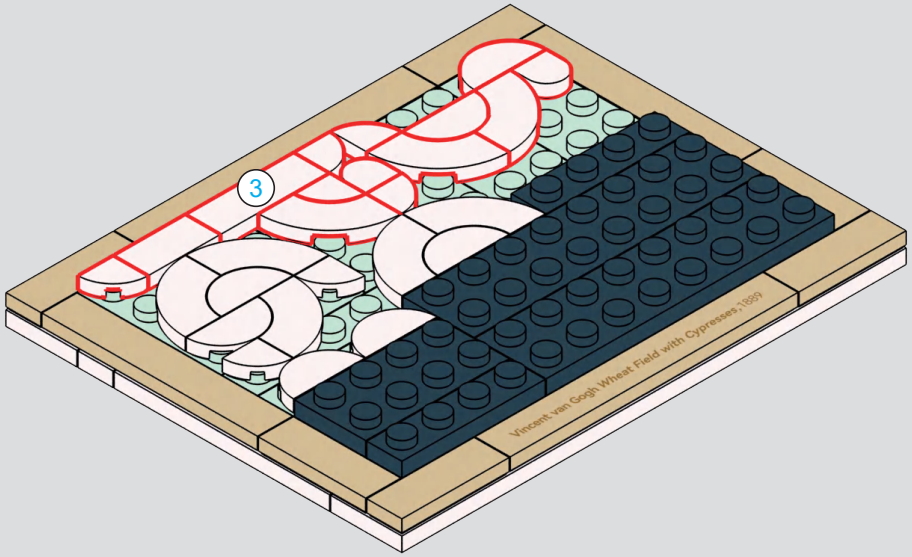
3
Vincent van Gogh Wheat Field with Cypresses, 1889

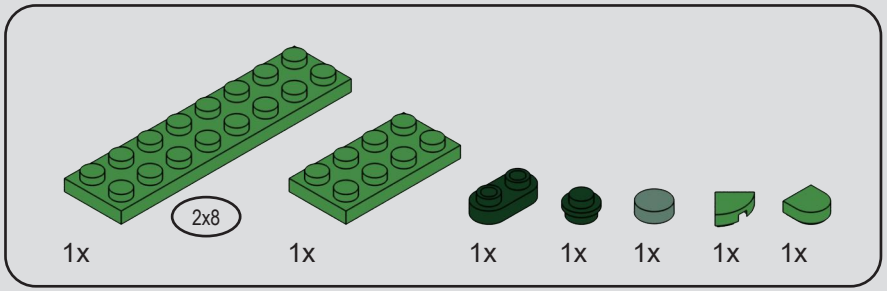
2x8
1x
1x
1x
1x
1x
1x
1x

317

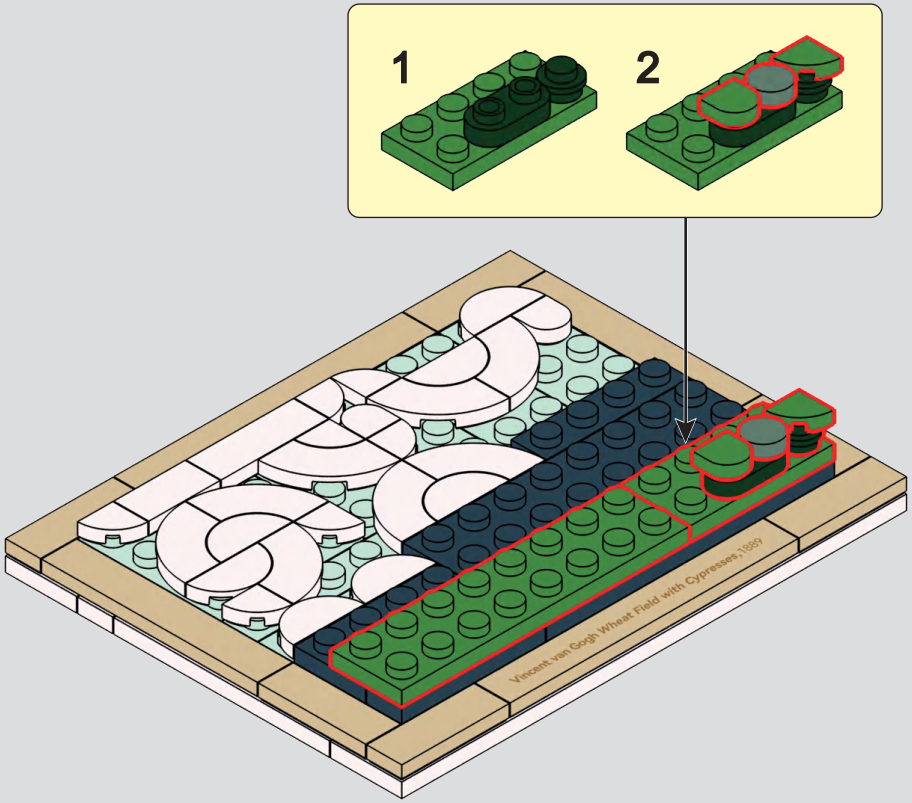
1
2
Vincent van Gogh Wheat Field with Cypresses, 1889

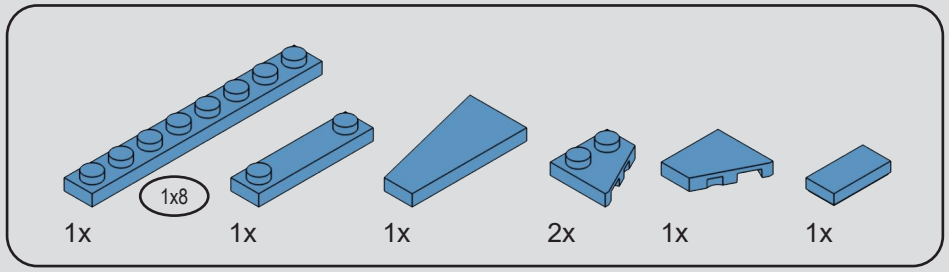
1x8
1x
1x
1x
2x
1x
1x

318

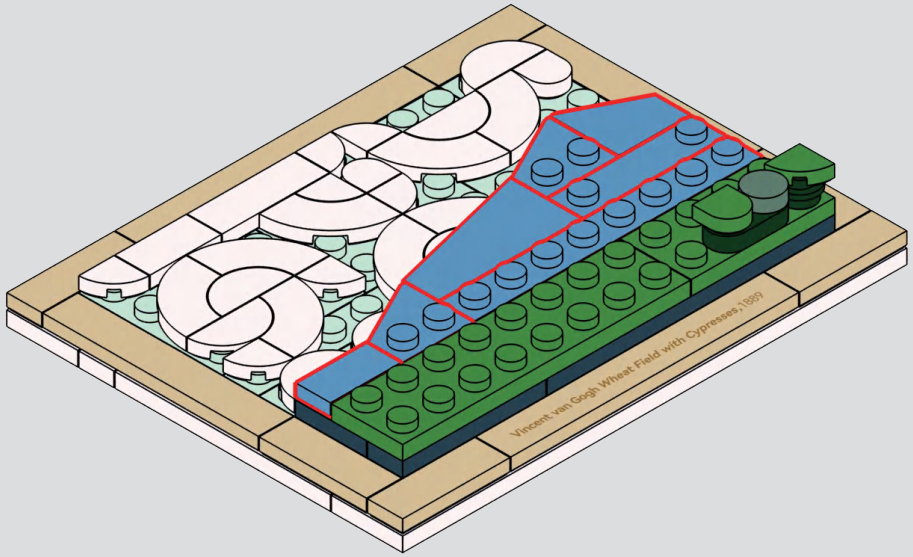
Vincent van Gogh Wheat Field with Cypresses, 1889

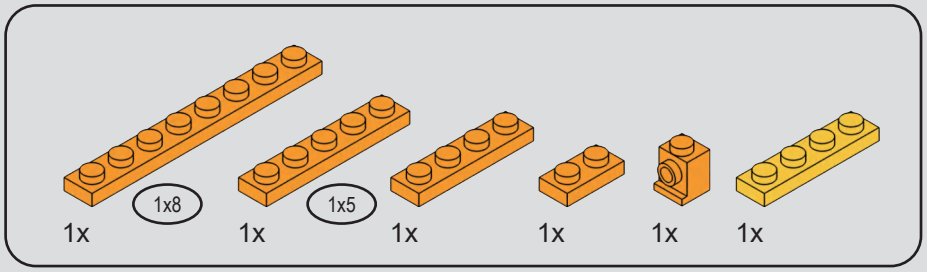
1x8
1x5
1x
1x
1x
1x
1x
1x

319

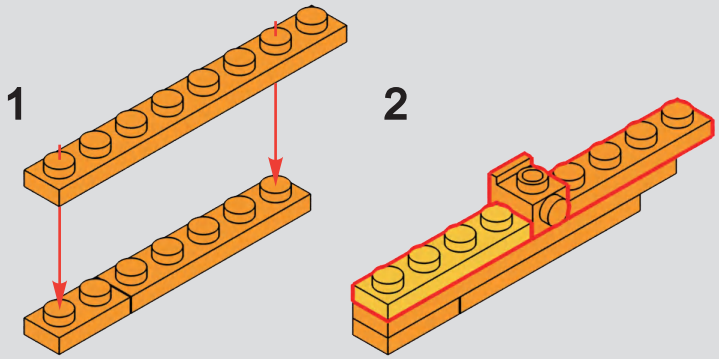
1
2

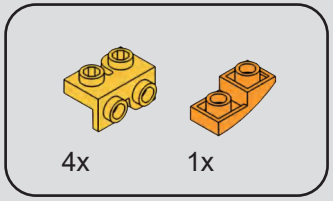
4x
1x

320

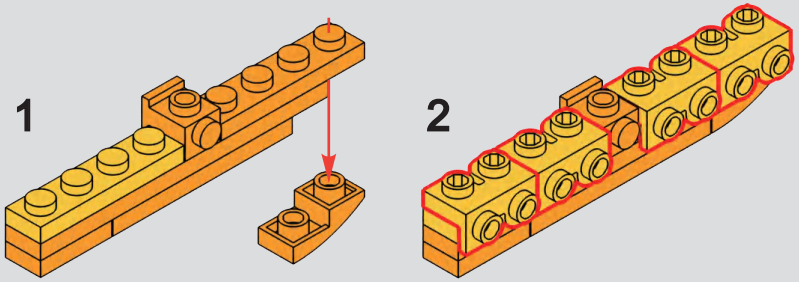
1
2

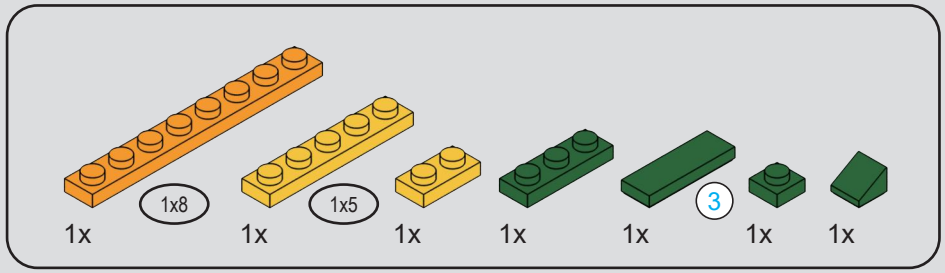

321

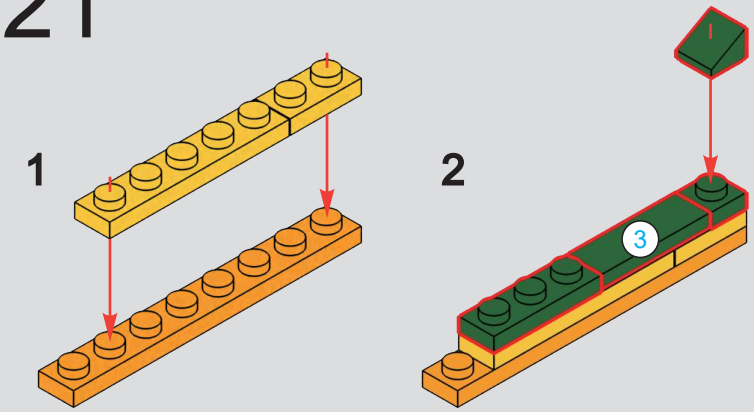

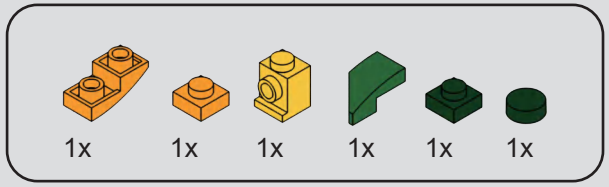

322

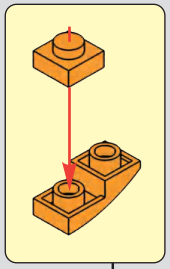

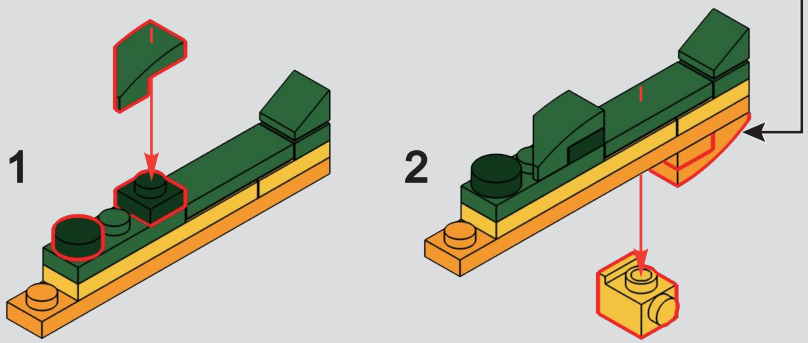

323

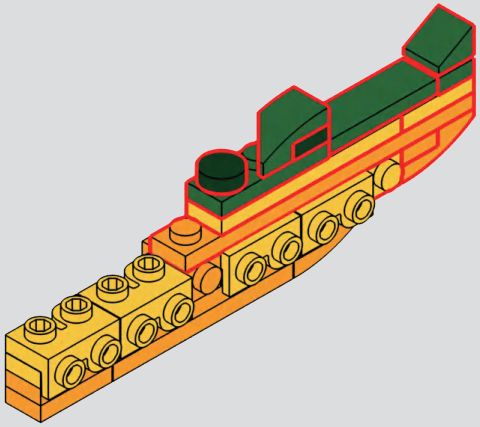

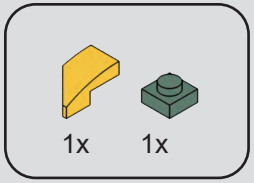

324

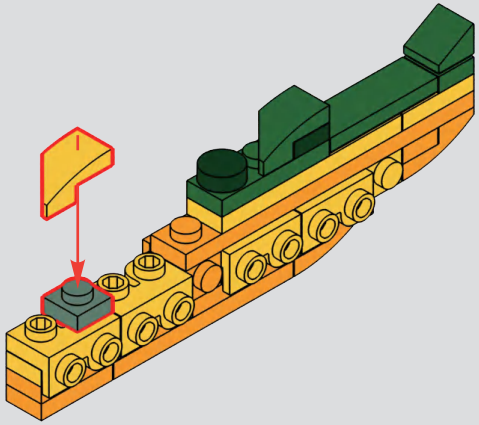

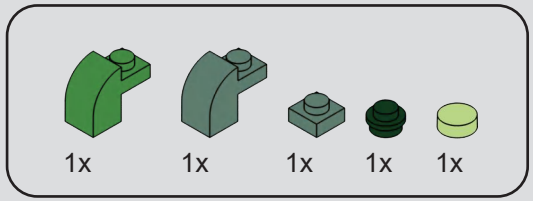
1x
1x
1x
1x
1x

325

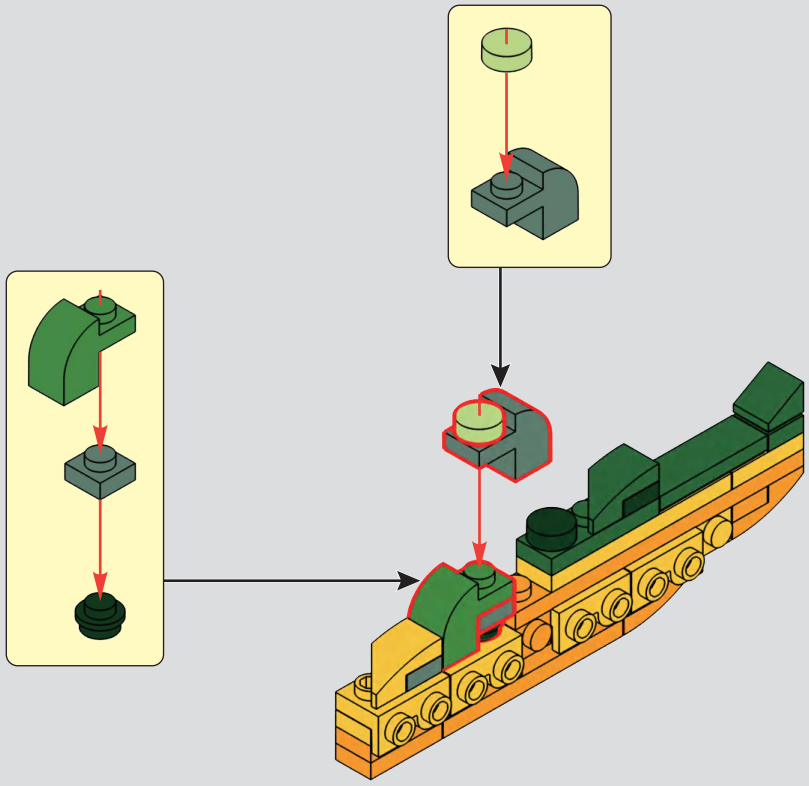

326

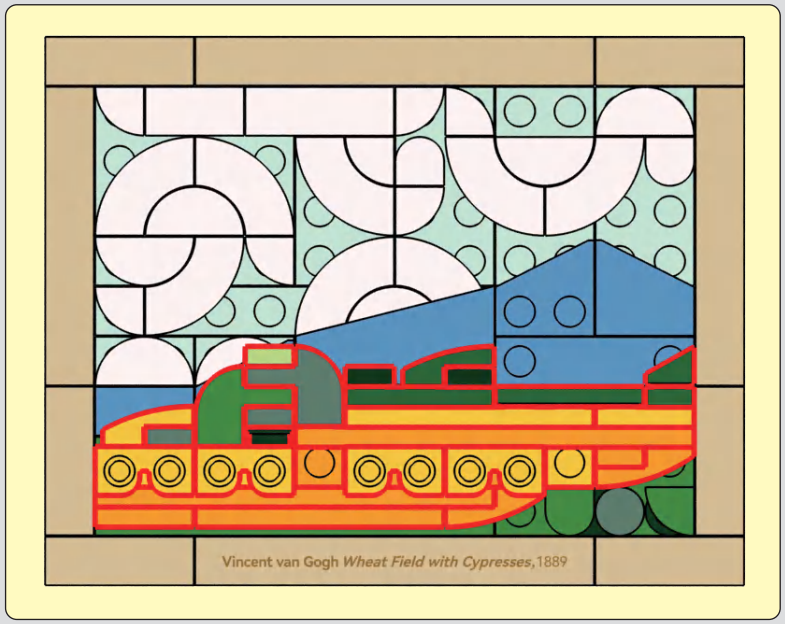
Vincent van Gogh *Wheat Field with Cypresses*, 1889

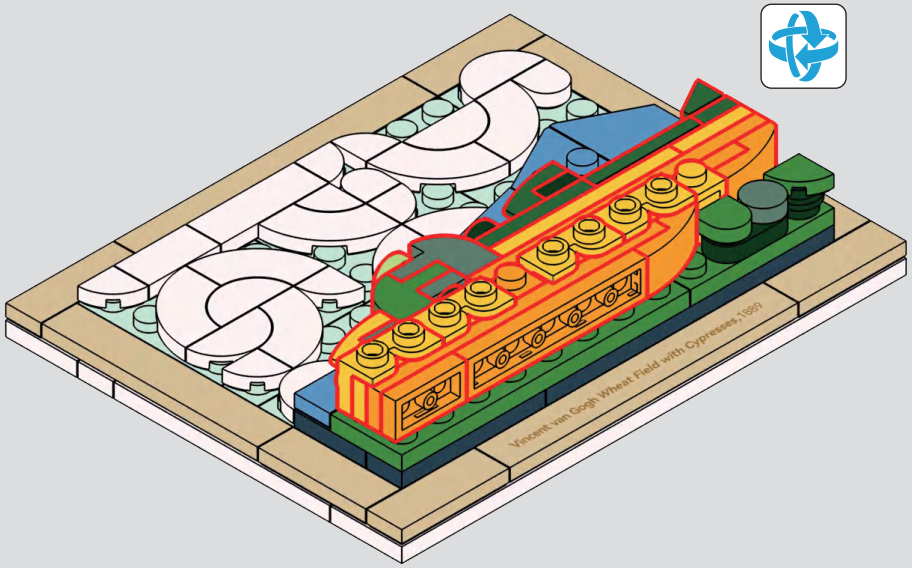

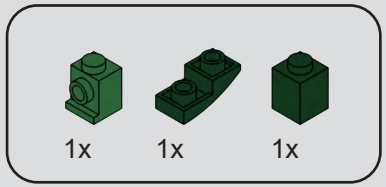

327

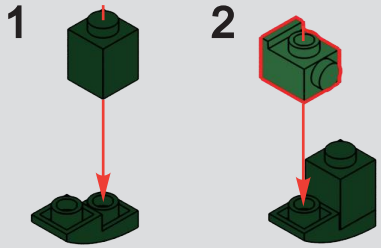

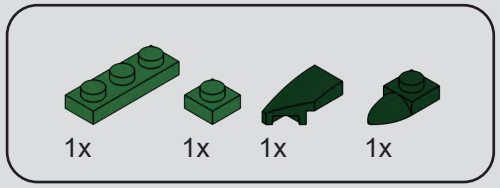

328

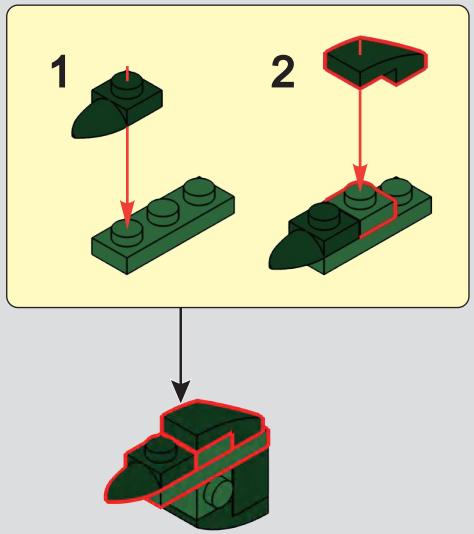

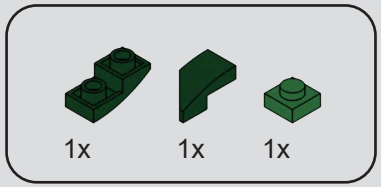

329

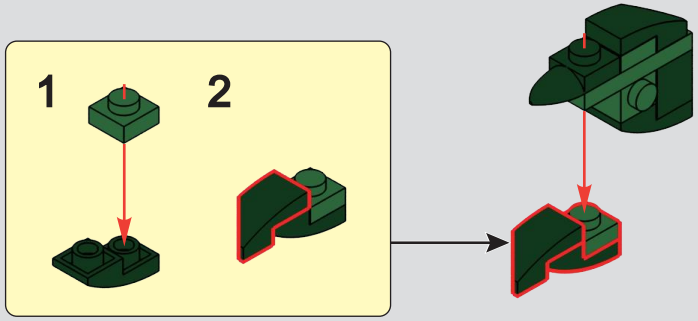

330

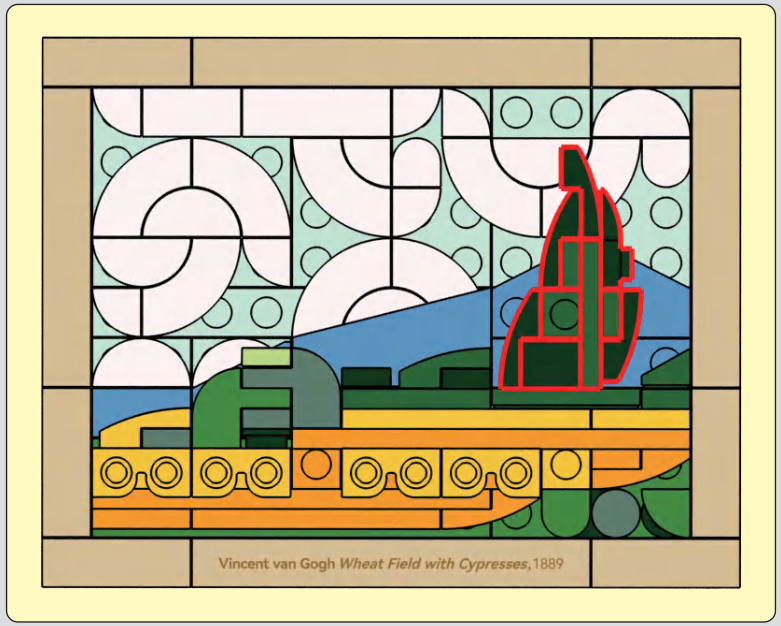

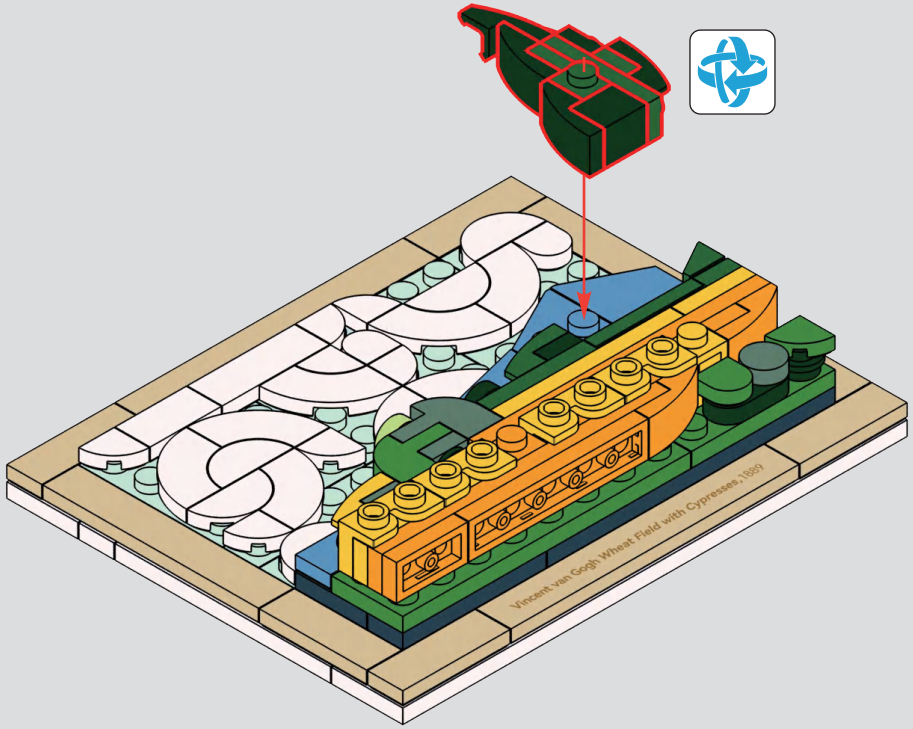

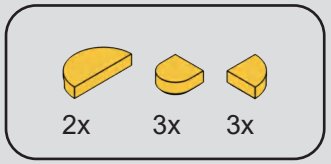

331

1

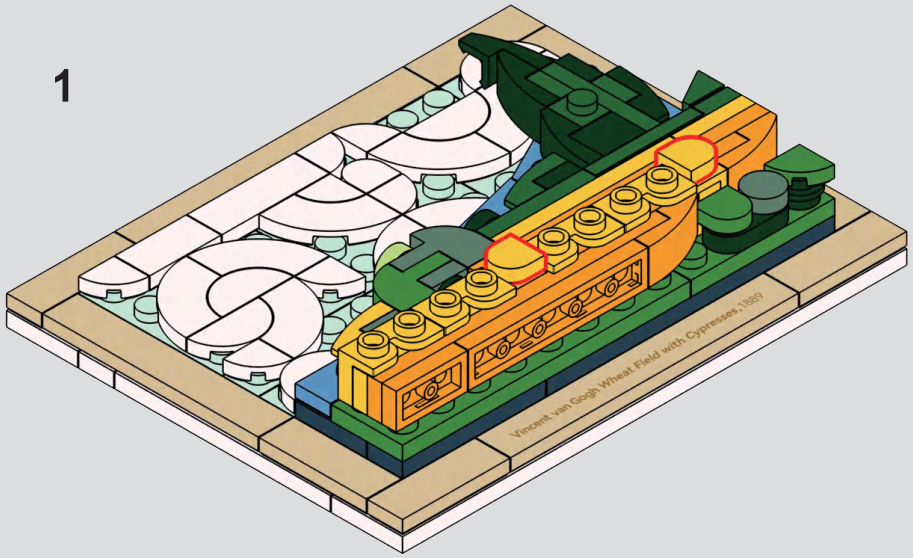

2

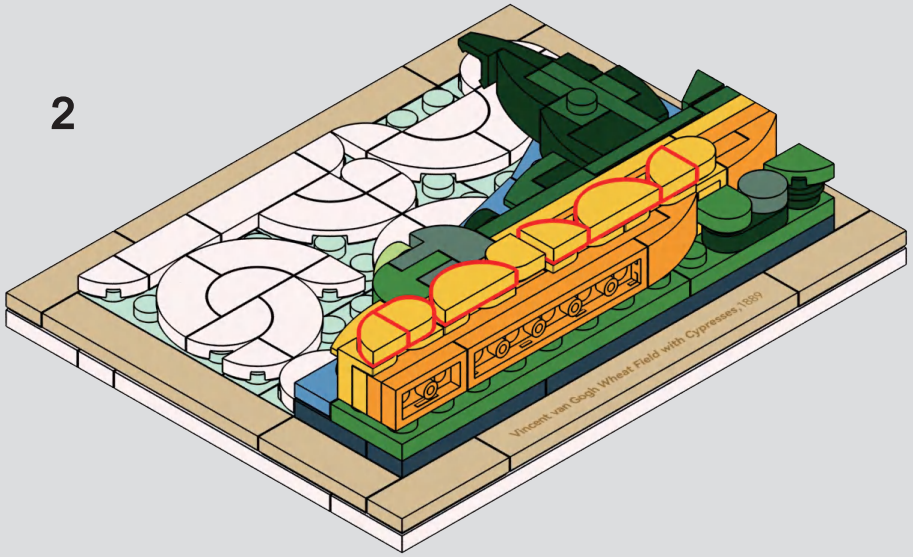

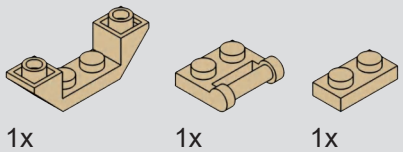

332

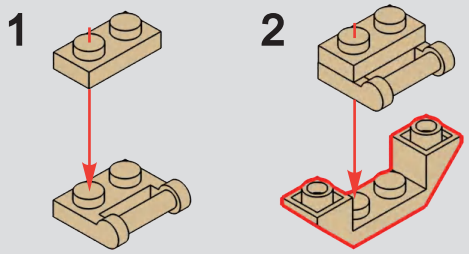

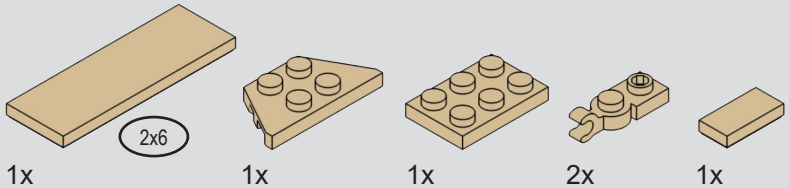

333

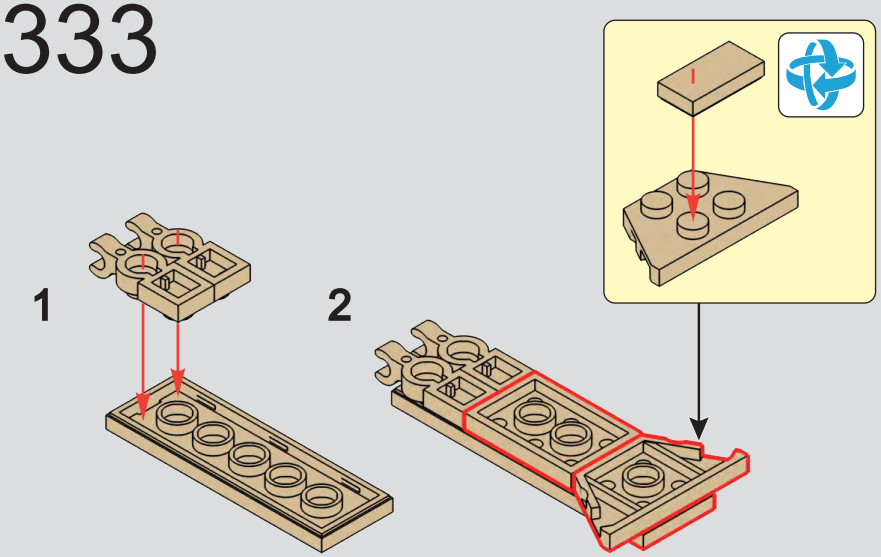

334

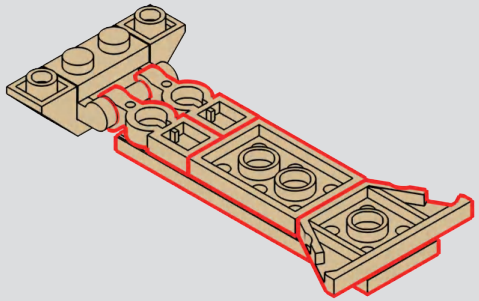

335

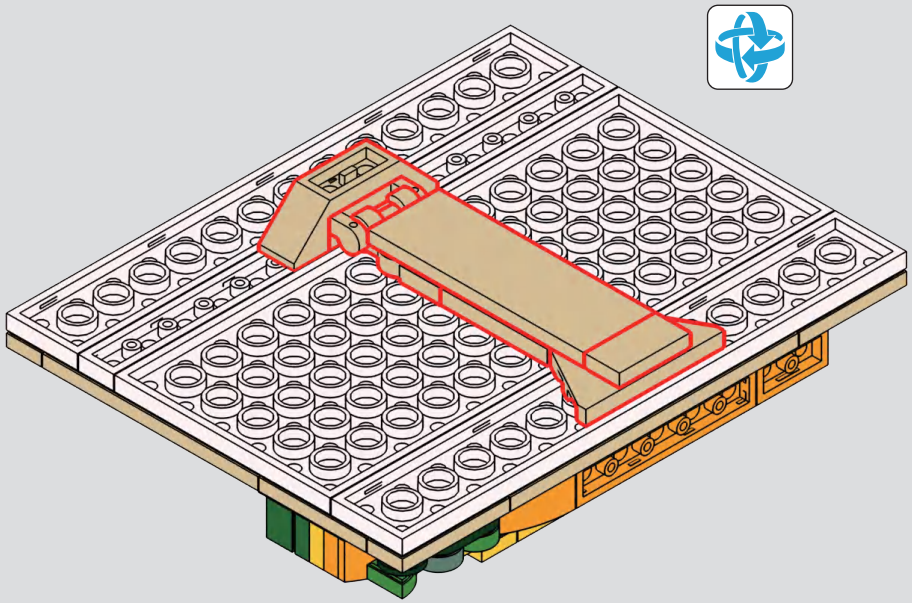

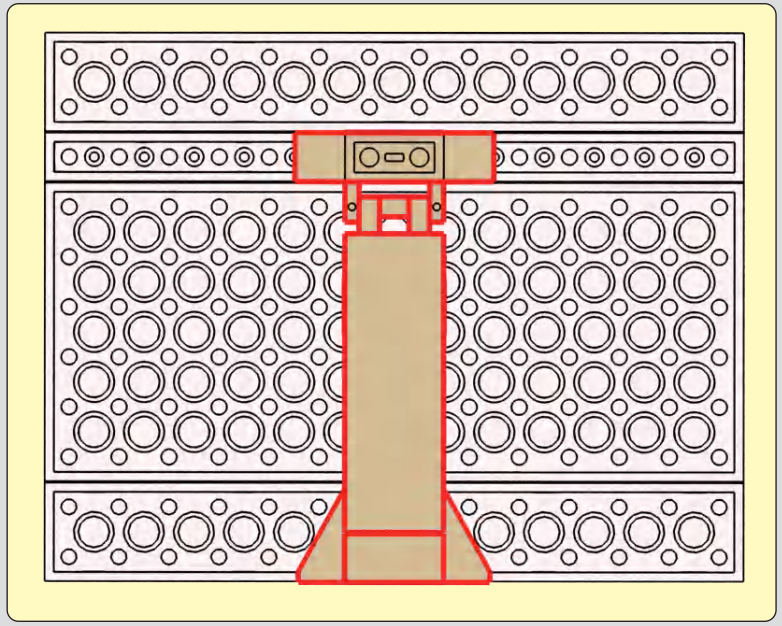

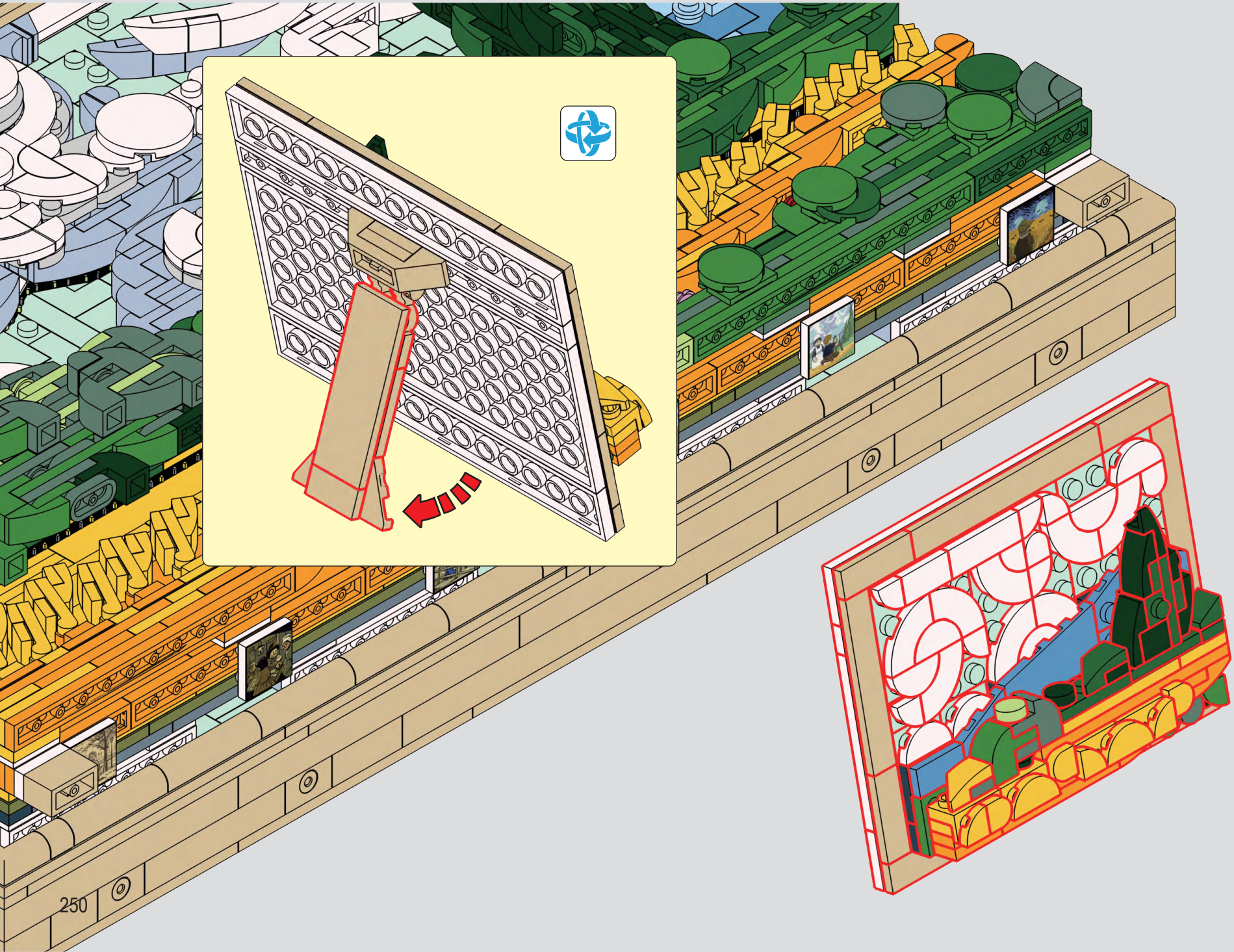
250

LUMICANVAS

We would like your opinion on the new product you have just purchased. Your feedback will help shape the future development of this product series.

Please visit: https://www.lumibricks.com/pages/feedback

We sincerely hope you enjoy the product and we can't wait to see you again soon.Please let us know if we can do anything else to help!

3D画系列

感谢您对本系列产品的喜爱与支持，如您在拼搭过程中遇到任何问题，均可通过微信扫描二维码联系企微客服寻求协助。

如果您还有其他意见或者建议，也请务必通过企微客服告知我们，期待与您的再次相遇！

企微客服

• TOWN LIFE/小镇生活

L9100
Toy Store
玩具店

L9084
Heritage Tram
and Station
有轨电车

L9085
Brick Art Gallery
布里克艺术画廊

F9078
Artisan Gelato Studio
冰淇淋商店

• STREET FUSION/美式街头系列

L9093
Collectible Low Rider
- Big Red
西海岸跳跳车

19009
Boxing Club
拳击俱乐部

F9068
Factory Club of Music
音乐砖厂 Livehouse

F9058
Record Store
唱片店

V1.1

Lumibricks and Lumibricks logo are trademarks of the Lumibricks group.

WWW.LUMIBRICKS.COM

如果您遇到任何问题，请通过以下方式与我们联系：

lumibricks灯搭官方旗舰店

会员中心